1231532

[0079657H]

Explanation of Significant Differences

For the

U.S. Department of Energy
Environmental Restoration Disposal Facility
Hanford Site – 200 Area
Benton County, WA

EPA ID: WA1890090078

October 2015

RECEIVED
OCT 21 2015
EDMC

Attached to: 1231531

177

SITE NAME AND LOCATION

U.S. Department of Energy
Environmental Restoration Disposal Facility (ERDF)
Hanford Site – 200 Area
Benton County, Washington

Lead and Support Agencies

The U.S. Environmental Protection Agency (EPA) is the lead regulatory agency for the Environmental Restoration Disposal Facility (ERDF), the U.S. Department of Energy (DOE) is lead agency for operation and management of the ERDF, and the Washington State Department of Ecology (Ecology) is the support agency (the Tri-Parties).

Statutory Citation for an Explanation of Significant Differences

In Section 117(c) of the *Comprehensive Environmental Response, Compensation, and Liability Act of 1980* (CERCLA), provisions are made for addressing and documenting changes to the selected remedy that occur after the record of decision (ROD) is signed. This explanation of significant differences (ESD) documents the changes to the selected remedy in accordance with CERCLA Section 117(c). Additionally, since significant, nonfundamental changes are being made to the original remedy, documentation procedures specified by the "National Oil and Hazardous Substances Pollution Contingency Plan" (NCP) (40 CFR 300.435(c) (2) (i)) have been followed.

INTRODUCTION TO THE SITE AND STATEMENT OF PURPOSE

Remediation of waste sites in the 100, 200, and 300 Areas of the Hanford Site is being conducted under CERCLA (42 U.S.C. 9601 et. seq.). A January 1995 ROD (EPA 1995) authorized disposal of remediation wastes from these actions in the ERDF, a *Resource Conservation and Recovery Act of 1976* (RCRA)-compliant landfill located within the 200 Areas of the Hanford Site.

An ESD (EPA 1996) to the ERDF ROD was issued on July 26, 1996, which authorized the conditional use of the leachate generated from ERDF operations for dust suppression and waste compaction through an applicable or relevant and appropriate requirement (ARAR) waiver until the leachate was delisted. The ERDF ESD identified the intention to delist the leachate from regulation as a hazardous waste. The waiver was proposed as an alternative until sufficient data became available to support a determination that the liquid is, in fact, a nonhazardous waste. The leachate was considered a listed hazardous waste because a small volume of soil presumed to have contacted carbon tetrachloride (F001 listed [40 CFR 261.31]) at very low concentrations was disposed to the ERDF. Other listed hazardous constituents could be disposed to the ERDF in the future, causing the leachate to be listed as F039 (40 CFR 261.31). The leachate was also designated as a state-only dangerous waste, F003, due to the presence of methanol.

An ERDF ROD amendment issued in March 1999 delisted the ERDF leachate, removing both the federal-listed and state-only listed waste codes that would otherwise apply to the leachate (EPA 1999).

The ERDF leachate delisting is considered an up-front and conditional delisting for leachate, including leachate that will be generated in the future operations of the facility. The delisting is conditional because the contaminant concentration requirements specified in the sampling and analysis plan must continue to be satisfied, and management of the leachate must comply with the sampling and analysis plan and the leachate management plan, as approved by the EPA. Exclusion from management as a hazardous waste is conditioned on the leachate meeting the limits established, as demonstrated through a verification sampling program. At a minimum, the leachate is sampled semiannually for all contaminants of concern (COCs). The results of these analyses are compared to the delisting levels provided after each round of sampling. If the leachate achieves compliance with delisting levels, it will be managed as nonhazardous. Those COCs whose analytical results from the first year of baseline sampling indicate that their concentrations are less than 10% of the delisting level will be moved into a less frequent confirmatory sampling regimen. COCs detected at concentrations greater than 10% of the delisting level will be monitored on a routine basis. The DOE shall include additional constituents in the routine sampling list after an evaluation of the data, as required by the EPA. Additionally, an evaluation of the waste streams going to the ERDF shall be done biennially in accordance with the sampling and analysis plan to ensure that the list of COCs adequately addresses contaminants being disposed. Confirmatory sampling for all COCs will take place every 2 years. Routine sampling occurs every 6 months.

As authorized by the 1999 ROD amendment, the delisted leachate from the ERDF operations currently is transferred via pipeline to the Liquid Effluent Retention Facility (LERF) and from there to the Effluent Treatment Facility (ETF), a permitted waste treatment facility.

The 1999 ROD amendment also allows for use of other treatment facilities for ERDF leachate management, if authorized. The Tri-Parties are issuing this ESD to allow the onsite 200 West Area Pump-and-Treat Facility (200 WPTF) to be used as an option for the treatment of ERDF leachate. This change would allow either the ETF or the 200 WPTF to be used for treatment of ERDF leachate, depending upon availability. The 200 WPTF has been evaluated in a separate CERCLA decision document and authorized for operation to treat contaminated groundwater (*Record of Decision Hanford 200 Area 200-ZP-1 Superfund Site Benton County Washington* [EPA 2008]). The Tri-Parties have determined that the 200 WPTF is also capable of treating ERDF leachate to levels that are protective of human health and the environment at substantially lower cost than the ETF.

The concentrations of contaminants in the ERDF leachate are within the process treatment envelope for the 200 WPTF, and there is sufficient capacity to accommodate the addition of the ERDF leachate stream, as documented in SGW-58619, *Impact of Environmental Remediation Disposal Facility (ERDF) Leachate on the 200 West Area Pump and Treat Facility.* Liquid discharges from the 200 WPTF are discharged to groundwater, subject to meeting stringent discharge limits as defined in the 200-ZP-1 ROD (EPA 2008). Solid waste from the facility will

be disposed at the ERDF or other approved facility in accordance with existing CERCLA decision documents.

In order to accommodate transfer of ERDF leachate to the 200 WPTF, the existing single-walled transfer pipeline will need to be extended and minor modifications to the 200 WPTF will be necessary. In addition to the ARARs listed in the original ERDF ROD, this ESD incorporates the following ARARs and other criteria, advisories, or guidance to be considered for this remedial action related to transfer piping design, construction, and installation. The new pipeline section crosses over drinking water supply piping and raw water supply piping. As described in WAC 246-290-200, guidance documents have been developed in order to assist in compliance with state and federal rules regarding drinking water. These guidance documents have been used to establish design and construction parameters for the new piping that are consistent with good engineering practices as required by WAC 246-290-200. Where the new piping section crosses over the drinking water supply piping and raw water supply piping, it will be encased in high-density polyethylene (HDPE) piping and vertical separation will be maintained as described in *Criteria for Sewage Works Design* (Ecology 2008) and *Pipeline Separation Design and Installation Reference Guide* (Ecology and DOH 2006). A more detailed evaluation of ARARs associated with transferring the ERDF leachate to the 200 WPTF is presented in Appendix A.

WAC 173-218-060 identifies registration requirements for Class V underground injection control (UIC) wells. Administrative requirements such as registration are not required for CERCLA on-site actions; however, providing information on the 200 WPTF will help ensure that the Washington State Department of Ecology's UIC database is maintained. Inventory information for the current 200 WPTF will be provided to Ecology for information purposes. Future changes to the 200 WPTF UIC network will be documented as a part of normal updates to the *200 West Pump and Treat Operations and Maintenance Plan* (DOE, 2015) and in the annual summary report for the Pump and Treat operations.

This ESD will also be available for review at the following information repositories.

Public Information Repositories

Public Access Room 2440 Stevens Center, Room 1101 P.O. Box 950, Mail Stop H6-08 Richland, WA 99352	Phone: (509) 376-2530 Fax: (509) 376-4989 POC: Heather Childers E-Mail: Heather_M_Childers@rl.gov
Suzzallo Library University of Washington P.O. Box 352900 Seattle, WA 98195-2900	Phone: (206) 543-4664 Fax: (206) 685-8049
DOE-RL Public Reading Room Washington State University	Phone: (509) 372-7443 Fax: (509) 372-7444

Consolidated Information Center
Room 101L
2770 University Drive
Richland, WA 99352

Gonzaga University
Foley Center
East 502 Boone
Spokane, WA 99258-0001
Phone: (509) 323-6110
Fax: (509) 324-5806

Portland State University
Branford Price Millar Library
1875 SW Park Avenue
Portland, OR 97207-1151
Phone: (503) 725-4709
Fax: (503) 725-4524

BASIS FOR THE SIGNIFICANT DIFFERENCES

The rationale for the changes to the original remedy is discussed in this section.

ERDF Leachate

The ERDF is a double-lined landfill meeting RCRA 40 CFR 264, Subpart N landfill and Subpart F groundwater monitoring requirements. The ERDF generates leachate that requires management within a regulatory framework. The ERDF ROD currently requires sufficient leachate storage capacity to ensure uninterrupted operations, complying with 40 CFR 264, Subpart N. Additionally, the 1999 ROD amendment for leachate delisting (EPA 1999) states that leachate collected at the ERDF that is not used for dust suppression within the ERDF will be managed at the ETF, located in the 200 East Area, or at another approved facility.

ERDF leachate is sampled on a routine basis in accordance with the 1999 delisting ROD amendment to ensure that contaminant levels meet the limits established in the amendment. Leachate transfers from the ERDF to the LERF via the existing single-walled pipeline are monitored by flowmeters at each end of the pipeline. Transfer volumes are monitored in accordance with an EPA-approved leachate management plan to ensure that a mass balance is maintained, thereby ensuring that the potential for major leaks along the pipeline is minimized.

Secondary waste, typically in the form of dry powder, generated from treatment of the ERDF leachate at the ETF is disposed at the ERDF in accordance with a 2007 ERDF ROD amendment (EPA 2007). Treated liquid from the ETF is discharged into the State-Approved Land Disposal Site (SALDS), a state-permitted disposal unit.

Treatment of ERDF leachate in the ETF has proven to be an effective approach for managing this waste stream; however, the 200 WPTF has been determined to provide a similar degree of treatment, at a much lower projected cost. Additionally, authorization of the 200 WPTF in

addition to the ETF will make available another treatment option for ERDF leachate, thereby helping to ensure uninterrupted operation of the ERDF in support of Hanford Site cleanup activities, such as the ability to free up additional capacity at the LERF/ETF to support single-shell and double-shell tank farm and Waste Treatment Plant operations.

DESCRIPTION OF SIGNIFICANT DIFFERENCES

Disposition of ERDF Leachate

The excess leachate generated from operation of the ERDF is being collected and transferred via pipeline to the LERF and ETF, or another approved facility for management and treatment. This ESD allows ERDF leachate to be transferred either to the ETF or the 200 WPTF for treatment. In order to accommodate use of the 200 WPTF, the existing single-walled transfer pipeline will need to be extended. The Tri-Parties have determined that the 200 WPTF is also capable of treating ERDF leachate to levels that are protective of human health and the environment at substantially lower cost than the ETF.

A summary of the differences between the original remedy and the modified remedy is shown in Table 1.

Table 1. Comparison of Original and Modified Remedy

Element	Original Remedy (Treatment at ETF)	Modified Remedy (Treatment at 200 WPTF)
Leachate transfer method	Uses existing piping	Transfer piping will need to be extended to the 200 WPTF. The new piping section will be designed and constructed in accordance with good engineering practices, as required by WAC 173-240-120. In the event new piping section is in proximity to existing drinking water supply piping, piping will also be required to meet WAC 246-290-200 and associated guidance
Leachate transfer monitoring	In accordance with 1999 ROD amendment; flowmeters on each end of transfer piping	In accordance with 1999 ROD amendment; flowmeters on each end of transfer piping
Leachate management plan	In accordance with existing EPA-approved plan	Existing leachate management plan will be revised as necessary and submitted to EPA for approval
Leachate delisting sampling	In accordance with 1999 ROD amendment	In accordance with 1999 ROD amendment
Treatment facility secondary waste disposal (solids)	In ERDF or other approved facility	In ERDF or other approved facility

Table 1. Comparison of Original and Modified Remedy

Element	Original Remedy (Treatment at ETF)	Modified Remedy (Treatment at 200 WPTF)
Treatment facility liquid waste discharge method	Into State-Approved Land Disposal Site in accordance with state-issued permit	CERCLA-authorized discharge from 200 WPTF
Treatment facility liquid waste discharge criteria	Must meet permit specified technology-based or groundwater quality standards	Must meet the discharge requirements of the 200-ZP-1 Groundwater OU ROD (except tritium)
Treatment facility liquid waste discharge monitoring	In accordance with state-issued permit	In accordance with EPA-approved 200 WPTF monitoring plan (as revised to include ERDF leachate)
Estimated cost of facility modifications	$0 (existing facility)	$3 million

NONLEAD REGULATORY AGENCY COMMENTS

Consistent with EPA guidance, Ecology reviewed the ESD. Suggested changes were incorporated into the text. Additionally, the Washington State Department of Health reviewed the design requirements for the new piping where it crosses over existing drinking water supply piping.

AFFIRMATION OF STATUTORY DETERMINATIONS

The revised remedy is protective of human health and the environment, will comply with the federal and state requirements that are legally applicable or relevant and appropriate to the remedial action, and is cost effective.

The preamble to the NCP clarifies that when noncontiguous facilities are reasonably close to one another and wastes at these sites are compatible for a selected treatment or disposal approach, CERCLA Section 104(d) (i) allows the lead agency to treat these related facilities as one site for response purposes and, therefore, allows the lead agency to manage waste transferred between such noncontiguous facilities without having to obtain a permit. The ERDF and the 200 WPTF are considered to be a single site for response purposes under this ESD.

PUBLIC PARTICIPATION

The public participation requirements set forth in 40 CFR 300.435(c)(2)(i) of the NCP are met through the issuance of this ESD and associated informational sheet, and through notification to the public via a newspaper publication placed in the *Tri-City Herald* on <date>, 2015.

REFERENCES

40 CFR 261, "Identification and Listing of Hazardous Waste," *Code of Federal Regulations*, as amended.

40 CFR 264, "Standards for Owners and Operators of Hazardous Waste Treatment, Storage, and Disposal Facilities," *Code of Federal Regulations*, as amended.

40 CFR 300, "National Oil and Hazardous Substances Pollution Contingency Plan," *Code of Federal Regulations*, as amended.

Comprehensive Environmental Response, Compensation, and Liability Act of 1980, 42 U.S.C. 9601, et seq.

DOE, 2015, *200 West Pump and Treat Operations and Maintenance Plan,* DOE/RL-2009-124, Rev. 4, U.S. Department of Energy, Richland Operations Office, Richland, Washington

Ecology, 2008, *Criteria for Sewage Works Design*, Publication No. 98-37 WQ, Washington State Department of Ecology, Olympia, Washington.

Ecology and DOH, 2006, *Pipeline Separation Design and Installation Reference Guide*, Publication Number 06-10-029, Washington State Department of Ecology and Washington State Department of Health, Olympia, Washington.

EPA, 1995, *Record of Decision: U.S. DOE Hanford Environmental Restoration Disposal Facility, Hanford Site, Benton County, Washington*, U.S. Environmental Protection Agency, Washington, D.C.

EPA, 1996, *U.S. DOE Environmental Restoration Disposal Facility, Hanford Site, Benton County, Washington – Explanation of Significant Difference (ESD)*, U.S. Environmental Protection Agency, Washington, D.C.

EPA, 1999, *U.S. Department of Energy, Environmental Restoration Disposal Facility, Hanford Site – 200 Area, Benton County, Washington; Amended Record of Decision, Decision Summary and Responsiveness Summary*, U.S. Environmental Protection Agency, Washington, D.C.

EPA, 2002, *Clarification of the 1999 Amendment to the Environmental Restoration Disposal Facility (ERDF) Record of Decision*, March 18, 2002, U.S. Environmental Protection Agency, Washington, D.C.

EPA, 2008, *Record of Decision Hanford 200 Area 200-ZP-1 Superfund Site Benton County, Washington*, U.S. Environmental Protection Agency, Washington, D.C.

EPA, 2009, *U.S. Department of Energy, Environmental Restoration Disposal Facility, Hanford Site – 200 Area, Benton County, Washington; Amended Record of Decision, Decision*

Summary and Responsiveness Summary, U.S. Environmental Protection Agency, Washington, D.C.

Resource Conservation and Recovery Act of 1976, 42 U.S.C. 6901, et seq., as amended.

SGW-58619, 2015, *Impact of Environmental Remediation Disposal Facility (ERDF) Leachate on the 200 West Area Pump and Treat Facility*, Rev. 2, CH2MHILL Plateau Remediation Company, Richland, Washington.

WAC 173-240, "Submission of Plans and Reports for Construction of Wastewater Facilities," *Washington Administrative Code*, as amended.

WAC 246-290, "Group a Public Water Supplies," *Washington Administrative Code*, as amended.

Signature sheet for the *Explanation of Significant Differences for the 1999 Amended Record of Decision for the Environmental Restoration Disposal Facility* between the U.S. Department of Energy and the U.S. Environmental Protection Agency.

Doug S. Shoop
Deputy Manager
Richland Operations Office
U.S. Department of Energy

10/8/15
Date

October 2015

Signature sheet for the *Explanation of Significant Differences for the 1999 Amended Record of Decision for the Environmental Restoration Disposal Facility* between the U.S. Department of Energy and the U.S. Environmental Protection Agency.

Dennis Faulk
U.S. Environmental Protection Agency, Region 10

10/15/15
Date

APPENDIX A. APPLICABLE OR RELEVANT AND APPROPRIATE REQUIREMENTS

Only the substantive requirements of listed ARARs are identified in the table below. This ESD does not remove any of the ARARs established in the original ERDF ROD or subsequent ERDF ROD amendments, but new ARARs have been added as specified below. Additionally, some previously selected ARARs for the 200 West Pump and Treat System were evaluated specifically with regard to receipt of the ERDF leachate.

Regulatory Citation	Description of Regulatory Requirement	Rationale for Including	Application
"Design of Public Water Systems – Design Standards" WAC 246-290-200	Requires use of good engineering practices when designing public water systems, such as those identified in Department of Health (DOH) guidance documents	The new section of ERDF leachate transfer piping will cross over existing drinking water and raw water supply piping. DOH guidance establishes separation or design practices to help protect drinking water supply systems from potential leakage from industrial wastewater lines	Where the new section of piping crosses over the drinking water and raw water supply lines, it will be encased in high-density polyethylene piping and vertical separation will be maintained as described in *Criteria for Sewage Works Design* (Ecology 2008) and *Pipeline Separation Design and Installation Reference Guide* (Ecology and DOH 2006).
"State Waste Discharge Permit Program," "Permit Terms and Conditions," WAC 173-216-110	Substantive provisions of WAC 173-216-110 for management of ERDF leachate at the 200 West Pump and Treat System are: • Use of all known, available, and reasonable methods of prevention, control, and treatment (AKART)	Although permits are not required for on-site CERCLA actions, substantive requirements associated with permits are ARARs	• 200 West Pump and Treat System provides AKART treatment for ERDF leachate constituents; system operation in accordance with EPA-approved *200 West Area 200-ZP-1 Pump and Treat*

Regulatory Citation	Description of Regulatory Requirement	Rationale for Including	Application
	• Establishment of any pretreatment requirements • Conditions necessary to protect beneficial uses of groundwater • Monitoring requirements		*Remedial Design Remedial Action Work Plan* (DOE, 2008b) .[a] • No pretreatment of ERDF leachate is required prior to introduction into the 200 West Pump and Treat System. As documented in the *Impact of Environmental Remediation Disposal Facility (ERDF) Leachate on the 200 West Area Pump and Treat Facility* (SGW-58619, 2015), the ERDF leachate has a small impact on the concentration of contaminants of concern; ERDF leachate will not adversely affect operation of system or result in discharge of effluent above cleanup levels established in the

Regulatory Citation	Description of Regulatory Requirement	Rationale for Including	Application
			200 West Area 200-ZP-1 Pump and Treat Remedial Design Remedial Action Work Plan (DOE, 2008b). • Monitoring will be performed in accordance with EPA-approved *200 West Area 200-ZP-1 Pump and Treat Remedial Design Remedial Action Work Plan* (DOE, 2008b) and the *200 West Pump and Treat Operations and Maintenance Plan,* (DOE, 2015), which includes the sampling and analysis plan for the treated effluent. . The EPA-approved *Environmental Restoration Disposal Facility Leachate Sampling and Analysis Plan* (WCH-173, 2014) will be revised, as necessary, to

Regulatory Citation	Description of Regulatory Requirement	Rationale for Including	Application
			incorporate additional analyses to support treatment of the ERDF leachate in the 200 West Pump and Treat System.
"UIC Well Classification Including Allowed and Prohibited Wells," prohibited Class V wells, WAC 173-218-040(5)(b)(vi)	Prohibits use of Class V underground injection control wells discharging industrial wastewater (including leachate from solid waste facilities) except as authorized under a permit	Permits are not required for injection of ERDF leachate via the 200 West Pump and Treat System as part of an on-site CERCLA action in accordance with the permit exemption of CERCLA Section 121(e) and the specific exemption for Class V injection wells in WAC 173-218-060(5)(a).	Substantive provisions of the permitting requirements of WAC 173-216-110 will be complied with for injection of 200 West Pump and Treat effluent containing treated ERDF leachate
"Standard Method B Potable Ground Water Cleanup Levels," WAC 173-340-720(4)(b)(iii)(A) and (B)	Method B equations used to calculate groundwater cleanup levels for noncarcinogens and carcinogens, respectively	Established as ARAR in original 200-ZP-1 Record of Decision (EPA, 2008)	ERDF leachate will be added to other wastewater streams and treated in 200 West Pump and Treat System in accordance with the *200 West Area 200-ZP-1 Pump and Treat Remedial Design Remedial Action Work Plan* (DOE, 2008b). Compliance with ARAR was evaluated in consideration of treating ERDF leachate. This evaluation

Regulatory Citation	Description of Regulatory Requirement	Rationale for Including	Application
			(SGW-58619, 2015) has shown that the 200 West Pump and Treat effluent discharges will meet groundwater cleanup levels with the addition of the ERDF leachate waste stream.
"Maximum Contaminant Levels for Organic Contaminants," 40 CFR 141.61	Establishes MCLs for drinking water that are designed to protect human health from the potential adverse effects of organic contaminants in drinking water	Established as ARAR in original 200-ZP-1 Record of Decision (EPA, 2008)	ERDF leachate will be added to other wastewater streams and treated in 200 West Pump and Treat System in accordance with the *200 West Area 200-ZP-1 Pump and Treat Remedial Design Remedial Action Work Plan* (DOE, 2008b). Compliance with ARAR was evaluated in consideration of treating ERDF leachate. This evaluation (SGW-58619, 2015) has shown that the 200 West Pump and Treat effluent discharges will meet groundwater cleanup levels with the addition of the ERDF leachate waste stream.
"Maximum Contaminant Levels for Inorganic Contaminants," 40 CFR 141.62	Establishes MCLs for drinking water that are designed to protect human health from the potential adverse effects of inorganic contaminants in drinking water	Established as ARAR in original 200-ZP-1 Record of Decision (EPA, 2008)	ERDF leachate will be added to other wastewater streams and treated in 200 West Pump and Treat System in accordance with the *200 West*

Regulatory Citation	Description of Regulatory Requirement	Rationale for Including	Application
			Area 200-ZP-1 Pump and Treat Remedial Design Remedial Action Work Plan (DOE, 2008b). Compliance with ARAR was evaluated in consideration of treating ERDF leachate. This evaluation (SGW-58619, 2015) has shown that 200 West Pump and Treat effluent discharges will meet groundwater cleanup levels with the addition of the ERDF leachate waste stream.
"Maximum Contaminant Levels for Radionuclides," 40 CFR 141.66	Establishes MCLs for drinking water that are designed to protect human health from the potential adverse effects of radionuclides in drinking water	Established as ARAR in original 200-ZP-1 Record of Decision (EPA, 2008)	ERDF leachate will be added to other wastewater streams and treated in 200 West Pump and Treat System in accordance with the *200 West Area 200-ZP-1 Pump and Treat Remedial Design Remedial Action Work Plan* (DOE, 2008b). Compliance with ARAR was evaluated in consideration of treating ERDF leachate. This evaluation (SGW-58719, 2015) has shown that 200 West Pump and Treat effluent discharges will meet groundwater cleanup

Regulatory Citation	Description of Regulatory Requirement	Rationale for Including	Application
			levels (except for tritium, which will be addressed via monitored natural attenuation in accordance with the 200-ZP-1 Record of Decision [EPA, 2008]) with the addition of the ERDF leachate waste stream.

[a] – The *Impact of Environmental Remediation Disposal Facility (ERDF) Leachate on the 200 West Area Pump and Treat Facility* (SGW-58619, 2015) concluded that the concentrations of contaminants in the ERDF leachate are within the process treatment envelope, and there is sufficient capacity to accommodate the addition of the ERDF leachate stream. The evaluation determined that ERDF leachate waste stream has a small impact on the concentration of the contaminants of concern for the 200 West Pump and Treat Facility, and that with planning and coordination, the 200 West Pump and Treat Facility is expected to treat the ERDF leachate and meet clean-up levels established in the 200-ZP-1 Record of Decision (EPA, 2008) and the *200 West Area 200-ZP-1 Pump and Treat Remedial Design Remedial Action Work Plan* (DOE, 2008b). The treatment technology at 200 West Pump and Treat Facility was initially selected after review of several alternatives treatment technologies, as documented in the *Feasibility Study Report for the 200-ZP-1 Groundwater Operable Unit* (DOE, 2008a), and was designed to provide appropriate treatment and sized using generally accepted guidelines. The 200 West Area Pump and Treat Facility provides appropriate treatment for constituents in the ERDF leachate, including removal of uranium and technetium-99 via ion exchange, fluidized bed reactor treatment for removal of nitrates, metals (including chromium), volatile organic compounds, and other contaminants, and air stripping for further removal and capture of volatile organic compounds.

REFERENCES

DOE, 2008a, *Feasibility Study Report for the 200-ZP-1 Groundwater Operable Unit,* DOE/RL-2007-28, Rev. 0, U.S. Department of Energy, Richland Operations Office, Richland, Washington

DOE, 2008b, *200 West Area 200-ZP-1 Pump and Treat Remedial Design Remedial Action Work Plan,* DOE/RL-2008-78, Rev. 0, U.S. Department of Energy, Richland Operations Office, Richland, Washington

DOE, 2015, *200 West Pump and Treat Operations and Maintenance Plan,* DOE/RL-2009-124, Rev. 4, U.S. Department of Energy, Richland Operations Office, Richland, Washington

Ecology, 2008, *Criteria for Sewage Works Design,* Publication No. 98-37 WQ, Washington State Department of Ecology, Olympia, Washington

Ecology and DOH, 2006, *Pipeline Separation Design and Installation Reference Guide,* Publication Number 06-10-029, Washington State Department of Ecology and Washington State Department of Health, Olympia, Washington

EPA, 2008, *Record of Decision Hanford 200 Area 200-ZP-1 Superfund Site Benton County, Washington,* U.S. Environmental Protection Agency, Washington, D.C.

SGW-58619, 2015, *Impact of Environmental Remediation Disposal Facility (ERDF) Leachate on the 200 West Area Pump and Treat Facility,* Rev. 2, CH2MHILL Plateau Remediation Company, Richland, Washington

WCH-173, 2014, *Environmental Restoration Disposal Facility Leachate Sampling and Analysis Plan,* Rev. 1, Washington Closure Hanford, LLC. Richland, Washington

CHPRC-02242
Revision 1

FUNCTIONAL DESIGN CRITERIA

ERDF LEACHATE LINE TO 200 WEST PUMP AND TREAT

Prepared for the U.S. Department of Energy
Assistant Secretary for Environmental Management

Contractor for the U.S. Department of Energy
under Contract DE-AC06-08RL14788

CH2MHILL
Plateau Remediation Company
P.O. Box 1600
Richland, Washington 99352

Approved for Public Release;
Further Dissemination Unlimited

CHPRC-02242
Revision 1
EDC#: ECR-15-000053

FUNCTIONAL DESIGN CRITERIA

ERDF LEACHATE LINE TO 200 WEST PUMP AND TREAT

Document Type: FDC Program/Project: W&FMP

W. W. Rutherford
CH2M HILL Plateau Remediation Company

Date Published
January 2015

Prepared for the U.S. Department of Energy
Assistant Secretary for Environmental Management

Contractor for the U.S. Department of Energy
under Contract DE-AC06-08RL14788

CH2MHILL
Plateau Remediation Company
P.O. Box 1600
Richland, Washington 99352

DATE:
Feb 17, 2015
HANFORD RELEASE

APPROVED
By Janis Braden at 2:27 pm, Feb 17, 2015

Release Approval | Date | Release Stamp

Approved for Public Release;
Further Dissemination Unlimited

TRADEMARK DISCLAIMER

Reference herein to any specific commercial product, process, or service by tradename, trademark, manufacturer, or otherwise, does not necessarily constitute or imply its endorsement, recommendation, or favoring by the United States Government or any agency thereof or its contractors or subcontractors.

This report has been reproduced from the best available copy.

Printed in the United States of America

Total pages: 41

**Approved for Public Release;
Further Dissemination Unlimited**

CHPRC RECORD OF REVISION (ROR)	(1) Document Number CHPRC-02242

(2) Title
Functional Design Criteria
ERDF Leachate Line to 200 West Pump and Treat

Change Control Record

(3) Revision	(4) Description of Change – Replace, Add, and Delete Pages ADD ROW	Authorized for Release (5) DA/TA	Date
0	Initial release	SA Strope 6-25-2014	☒
1 RS	Revised per ECR-15-000053	WW Rutherford WW Rutherford 1/22/15	☒
			☒
			☒
			☒
			☒
			☒
			☒
			☒
			☒
			☒
			☒
			☒
			☒
			☒
			☒
			☒
			☒
			☒
			☒
			☒
			☒
			☒

A-6004-786 (REV 2)

CHPRC-02242, Revision 1

Functional Design Criteria

ERDF Leachate Line to 200 West Pump and Treat

December
2014

Contents

Contents i

Figures ii

Terms iii

Metric Conversion Chart vi

1.0 Introduction 1

1.1 Background 1

1.2 Facility type 1

1.3 Site location 2

1.4 Project interfaces 2

1.5 Project schedule 2

1.6 Project objectives 4

1.7 Initial options considered 4

2.0 Functions and Requirements 7

2.1 Process requirements 7

2.2 Facility upgrades requirements 7

2.3 Preferred technology 7

2.4 Operational effectiveness 7

2.5 Unique environmental protection requirements 8

2.6 Design life 8

2.7 Waste acceptance criteria 8

3.0 Project Inputs 9

3.1 Systems, structures, or components 9

3.1.1 Utility interfaces 9

3.1.2 Facility interfaces 9

3.1.3 Process system interfaces 9

3.2 Nuclear safety 10

3.3 Design assumptions 10

4.0 Design Criteria 11

4.1 General Criteria 11

4.1.1 Quality assurance 11

4.1.2 Regulatory compliance 12

4.1.3 Flexibility and future expansion requirements 12

4.1.4 Human factors 12

4.1.5 Cleanliness and foreign material exclusion 12

4.2 Process design criteria 13
4.2.1 Leachate characteristics 13
4.2.2 Process design 14
4.2.3 Mechanical 14
4.2.4 Electrical 15
4.2.5 Instrumentation and controls 16
4.2.6 Civil and structural 18
4.3 Facility criteria 20
4.3.1 Natural phenomena hazards criteria 20
4.4 General requirements 21
4.4.1 Regulatory sampling requirements. 21
4.4.2 Maintenance provisions 22
4.4.3 Radiation safety 22
4.4.4 Industrial hygiene 22
4.4.5 Industrial safety 22
4.4.6 Fire protection 23
4.4.7 Environmental protection and pollution control 23
4.4.8 Equipment and instrument identification and labeling 23
4.4.9 Safeguards and security 23
4.4.10 Decontamination and decommissioning 23
5.0 Codes and Standards 25
5.1 Architectural/Civil/Structural 25
5.2 Mechanical 25
5.3 Electrical 25
5.4 Washington State Codes 26
5.5 Federal Codes 27

Figures

Figure 1-1 Location of Hanford 200 Areas 3
Figure 1-2 ERDF Leachate to 2WP&T Options 5
Figure 1-3 Routes for Options 1 and 2 6

Terms

2WP&T	200 West Pump and Treat
ACI	American Concrete Institute
AFD	adjustable frequency drive
AISC	American Institute of Steel Construction
ALARA	as low as reasonably achievable
ANSI	American National Standards Institute
API	American Petroleum Institute
ARAR	applicable or relevant and appropriate requirement
ASCE	American Society of Civil Engineers
ASME	American Society of Mechanical Engineers
ASTM	American Society for Testing and Materials
AWG	American Wire Gauge
AWS	American Welding Society
AWWA	American Water Works Association
bgs	below ground surface
CAT	construction acceptance test
CERCLA	Comprehensive Environmental Response, Compensation, and Liability Act of 1980
CHPRC	CH2M HILL Plateau Remediation Company
CO	Change Order
COC	contaminant of concern
DOE	U.S. Department of Energy
DPC	Distributed Process Control
DSA	Documented Safety Analysis
EPA	U.S. Environmental Protection Agency
ERDF	Environmental Restoration Disposal Facility
ESD	Explanation of Significant Differences
ETB	Extraction transfer building
ETF	Effluent Treatment Facility
FAT	factory acceptance test
FBR	fluidized bed reactor

Terms

FDC	Functional Design Criteria
FIBC	flexible intermediate bulk container
FO	fiber optic
gpm	gallons per minute
HDPE	high-densitypolyethylene
HMI	human-machine interface
HP	horsepower
HVAC	heating, ventilation, and air conditioning
ICC	International Code Council
IEEE	Institute of Electrical and Electronics Engineers
IES	Illuminating Engineering Society of North America
IH	Industrial Hygiene
ITB	Injection Transfer Building
IX	ion exchange
MBR	membrane bioreactor
MCL	maximum contaminant level
MNA	monitored natural attenuation
N/A	not applicable
NEMA	National Electrical Manufacturers Association
NFPA	National Fire Protection Association
NPL	"National Priorities List" (40 CFR 300, Appendix B)
P&T	pump-and-treat
PLC	programmable logic controller
OAT	operational acceptance test
OU	operable unit
PVC	polyvinyl chloride
QA	quality assurance
RAD	radiological treatment (building)
RAO	remedial action objective
RCRA	Resource Conservation and Recovery Act of 1976

Terms

RD/RAWP	remedial design/remedial action work plan
RHT	resin holding tank
ROD	record of decision
RST	resin stripping tank
S&GRP	Soil and Groundwater Remediation Program
SCADA	supervisory control and data acquisition
SSC	structure, system, or component
TBD	to be determined
Tc-99	technetium-99
TWS	treated water supply
USC	United States Code
USIT	uranium system inlet tank
VAC	volts alternating current
VDC	volts direct current
VOC	volatile organic compound
VOG	vapor off gas
VPGAC	Vapor-phase granular activated carbon
WCH	Washington Closure Hanford
WMA	waste management area
WSDOT	Washington State Department of Transportation

Metric Conversion Chart

Into Metric Units If You Know	Multiply By	To Get	Out of Metric Units If You Know	Multiply By	To Get
Length			Length		
Inches	25.40	millimeters	millimeters	0.0394	inches
Inches	2.54	centimeters	centimeters	0.394	inches
Feet	0.305	meters	meters	3.281	feet
Yards	0.914	meters	meters	1.094	yards
Miles (statute)	1.609	kilometers	kilometers	0.621	miles (statute)
Area			Area		
sq. inches	6.452	sq. centimeters	sq. centimeters	0.155	sq. inches
sq. feet	0.093	sq. meters	sq. meters	10.764	sq. feet
sq. yards	0.0836	sq. meters	sq. meters	1.196	sq. yards
sq. miles	2.591	sq. kilometers	sq. kilometers	0.386	sq. miles
acres	0.405	hectares	hectares	2.471	acres
Mass (weight)			Mass (weight)		
ounces (avoir.)	28.349	grams	grams	0.0353	Ounces
pounds	0.454	kilograms	kilograms	2.205	Pounds
ton (short)	0.907	ton (metric)	ton (metric)	1.102	ton (short)
Volume			Volume		
teaspoons	5	Milliliters	milliliters	0.034	ounces (U.S., liquid)
tablespoons	15	Milliliters	liters	2.113	Pints
fluid ounces	29.573	Milliliters	liters	1.057	quarts (U.S., liquid)
cups	0.24	Liters	liters	0.264	gallons (U.S., liquid)
pints	0.473	Liters	cubic meters	35.315	cubic feet
quarts	0.946	Liters	cubic meters	1.308	cubic yards
gallons	3.785	Liters			
cubic feet	0.0283	cubic meters			
cubic yards	0.764	cubic meters			
Temperature			Temperature		
Fahrenheit	(°F-32)*5/9	Celsius	Celsius	(°C*9/5)+32	Fahrenheit
Radioactivity			Radioactivity		
Picocuries	37	Millibecquerel	millibecquerel	0.027	Picocuries

1.0 Introduction

1.1 Background

This Functional Design Criteria (FDC) document provides the design criteria and fundamental design requirements necessary to develop conceptual, preliminary, and definitive design for the ERDF Leachate Line to the 200 West Pump and Treat (2WP&T) project. The scope of this project is to install a leachate transfer piping system to pump leachate derived from the landfill operations from the Hanford Environmental Restoration Disposal Facility (ERDF) to the 2WP&T and integrate that process with the existing ERDF and 2WP&T operations.

Currently ERDF leachate is transferred via a pipeline to the Effluent Treatment Facility (ETF), in the 200 East area for treatment and disposal. With decreasing waste streams to the ETF, unit costs for treatment of the ERDF leachate along with other waste streams have risen. Consequently, an effort is currently underway to facilitate alternative treatment of most of the waste streams currently treated at ETF.

This FDC provides the design criteria necessary to enable design of the new piping system to meet the requirements of Change Order (CO) 249. CO 249 provides for the design, permitting, and management that will enable installation of the leachate transfer piping system from ERDF to the 2WP&T facility. This FDC only addresses the transfer of ERDF leachate to the 2WP&T facility and associated start up and commissioning of the transfer system. The FDC was prepared following the guidance provided in PRC- STD-EN-40255, Functional Design Criteria.

The use of "shall," "will," "should," and "may" in this document is as follows:

- Whenever the word "shall" appears, it shall be interpreted to mean that the requirements are binding.
- The words "will," "should," and "may" shall be interpreted as non-mandatory provisions.
- The word "will" is also used to express declaration of purpose or simple futurity.
- The word "should" is used to express non-mandatory desired or preferred method of accomplishment.
- The word "may" is used to express an acceptable or suggested means of accomplishment.

1.2 Facility type

ERDF

ERDF is a low-level mixed waste landfill located in the 200 Area of the Hanford site operated by Washington Closure Hanford (WCH) and regulated by the U.S. Environmental Protection Agency (EPA). Built in 1996, ERDF accepts low-level radioactive, hazardous, and mixed wastes that are generated during the cleanup activities at the Site. Designed to be expanded as needed, ERDF comprises a series or cells or disposal areas.

Each ERDF cell has a liner consisting of multiple layers of geomembranes and other impermeable materials. A leachate collection system removes liquids as they drain through the waste materials. Water enters the facility through precipitation as well as water used for dust suppression during routine operations. Currently ERDF leachate is collected in two 400,000 gallon storage tanks and transferred via the ERDF Leachate
Pump House (Building 6618C) through a single-walled pipeline to ETF for treatment and disposal. No closure date has been established for ERDF with operation planned to at least 2035.

2WP&T

The 2WP&T facility, Hanford's largest facility for treating contaminated groundwater, began operating in 2012 and uses a network of wells and treatment technologies to remove the contamination and shrink groundwater contamination plumes covering four square miles in the 200 West area.

The facility is regulated by the EPA and has a hydraulic capacity of 2,500 gallons per minute (gpm). It is currently operating at a nominal capacity between 1,500 to 2,200 gpm. The plant treats contaminants including carbon tetrachloride, nitrate, and radionuclides through a treatment train consisting of ion exchange, biological treatment and physical processes. Contaminants are restricted from moving toward the Columbia River by wells that inject treated water near the outside edge of the area of contamination.

The 2WP&T facility has two parallel ion exchange (IX) treatment trains for Tc-99 removal followed by biological treatment trains. The biological process uses two parallel fluidized bed reactors (FBRs) and four parallel membrane bioreactors (MBRs) to treat nitrate, carbon tetrachloride, and chromium. The effluent from the biological process passes through two parallel air strippers to remove volatile organic compounds (VOCs) prior to discharge to an effluent tank. Injection booster pumps convey the treated water for discharge into the injection well field. The sludge generated from the biological treatment process is treated through rotary drum thickeners and then through centrifuges. Sludge is mixed with lime prior to load out and disposal at ERDF. The planned operational lifetime of the 2WP&T facility is 25 years.

1.3 Site location

The U.S. Department of Energy (DOE) Hanford Site is a 1,517 km^2 (586 mi^2) federal facility located in southeastern Washington State along the Columbia River (Figure 1-1). For administrative purposes, the Hanford Site was divided into four 40 CFR 300, "National Oil and Hazardous Substances Pollution Contingency Plan," Appendix B, "National Priorities List" (NPL) sites under the Comprehensive Environmental Response, Compensation, and Liability Act of 1980 (CERCLA), one of which is the
200 Area. The 200 Area NPL site, which is commonly referred to as the Central Plateau, encompasses approximately 190 km^2 (75 mi^2) near the center of the Hanford Site and contains multiple waste sites, contaminated facilities, and groundwater contamination plumes.

1.4 Project interfaces

Treatment of ERDF leachate at the 2WP&T facility will be facilitated by the 200-UP-1 project to enable treatment of the entire range of potential contaminants in the ERDF leachate. The 200-UP-1 project will install an IX treatment train to remove uranium in the 2WP&T radiological (RAD) building in FY2015 along with two new wells and groundwater transfer piping from the 200-UP-1 operating unit (OU). Implementation of the 200-UP-1 project will run concurrently with, and complete prior to the ERDF Leachate to 2WP&T project. The 200-UP-1 project will require modification of the 2WP&T facility's systems, structures, and components including filtration, supply pumps, instrumentation and controls to accommodate removal of uranium from 200-UP-1 extraction wells.

1.5 Project schedule

The schedule for the ERDF Leachate to 2WP&T project has the following early milestones:

- Completion of conceptual design: July 14, 2014
- Completion of preliminary design: August 26, 2014
- Completion of definitive design: January 30, 2015
- Completion of construction: April 30, 2015
- Completion of operational testing and project handover: June 30, 2015

Figure 1-1. Location of Hanford 200 Areas

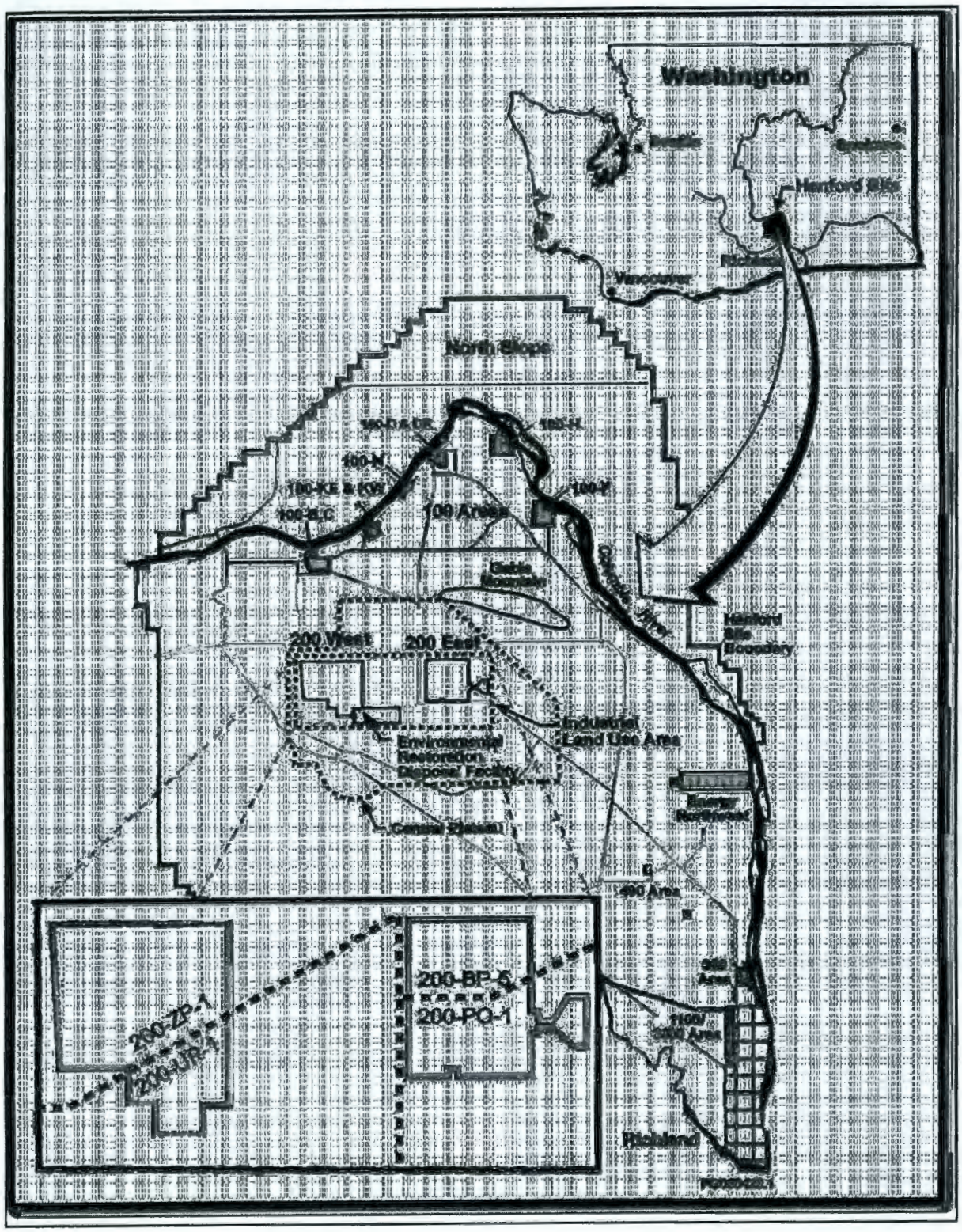

1.6 Project Objectives

The objective of the ERDF Leachate to 2WP&T project is to deliver a safe and environmentally responsible provision of transfer of ERDF leachate and treatment at the 2WP&T facility. Key success factors include the following:

- A fiscally responsible approach
- Requirements of ERDF and 2WP&T are achieved in a manner that delivers low risk operations.
- The project will efficiently interface with ERDF, the 2WP&T project, and the 200-UP-1 project.
- Annual operational and maintenance expenditures are minimized.
- The project is scheduled to closely follow implementation of 200-UP-1 project.
- The project leverages efficiencies from the 200-UP-1 project in such areas as road crossings, pipe installation, ecological and cultural reviews, line routing, and instrumentation and controls.

1.7 Initial options considered

Representatives of ERDF, 2WP&T, and the Decommissioning, Waste, Fuels, & Remediation Services (DWFRS) organizations developed the functional requirements for the project that are described in this document. The team met on two occasions to develop and score various options for the project. Figure 1-2 provides a summary of the options developed, scored, and identifies the two options selected for further evaluation.

The preferred option (Option 1) is a dedicated line either buried or covered with a berm running from the ERDF Leachate Pump House along Albany Avenue then west to 2WP&T. Figure 1-3 provides a drawing of the routes for Option 1 and Option 2. Option 1 (including sub-options and b) was identified by the team as providing the simplest and lowest risk new installation for long-term operations. The sub-options identify routes where ecological issues should be minimized. Cost and operational benefits of berming versus burial will be evaluated during the Conceptual Design phase.

Option 2 is an alternative dedicated above-ground line from the ERDF Leachate Pump House to 2WP&T run along 16th Street, Beloit Ave., 19th Street, and Bridgeport Ave. This option would require an additional 400,000 gallon storage tank to be installed at ERDF as part of the project to enable storage of leachate through the winter freeze period. This option was considered as an alternative to Option 1 if the preferred option would become impractical for some unforeseen reason.

Both Option 1 and Option 2 fulfill the functional requirements of the project as determined by the ERDF, 2WP&T, and DWFRS team.

In the period since the representatives of ERDF, 2WP&T, and the Decommissioning, Waste, Fuels, & Remediation Services (DWFRS) organizations scored the various options for the project, additional understanding of the PVC piping that currently transports leachate from ERDF to ETF (Option 5) has been disclosed. Additionally, piping exists that with some modification, may be able to deliver the leachate most of the way to the 2WP&T facility within a reasonable risk tolerance at a substantially reduced cost. This option will be further evaluated in the conceptual design process.

Figure 1-2. ERDF Leachate to 2WP&T Options

#	Options	Description	Cost	Schedule	Operability	Sustainability	Risk	Total	Summary
1	Dedicated underground line along Albany Avenue	Install a dedicated underground line from the ERDF transfer station along Albany Avenue then west to 2WP&T	6	6	1	1	1	15	1 - Simplest new installation for long-term operations. Cost and operational benefits of berming versus burial will be evaluated
2	Run above ground and install a 3rd ERDF leachate storage tank for winter storage	Run new dedicated above ground line from the ERDF transfer station to 2WP&T along simplest route. Install an additional 400k gallon storage tank at ERDF to enable storage of leachate through the winter freeze period	4	5	3	3	2	17	2 - Low risk and flexible option. The costs for installing a 400,000 gallon tank versus burying or berming a line will be further evaluated
3	Dedicated underground line along Belloit Avenue	Install a dedicated underground line from the ERDF transfer station along 16th Street to Belloit Avenue down 19th Street then north to 2WP&T	7	7	2	2	3	21	Rejected. More difficult and less desireable route then #1 with buried infrastructure and more road crossings
4	Use existing ETF line to tie in to planned UP-1 line(s) above ground	Use the existing underground ETF line and tie into the new UP-1 lines at the wells to run aboveground to the 2WP&T	2	2	6	6	6	22	Rejected. Low cost approach but it is unlikely that regulators will allow tie-in to groundwater extraction well line(s)
5	Extend underground from current ETF line	Use existing line to ETF, modify at current cross-site tie-in and run new dedicated underground line down 19th Street then north to 2WP&T	3	4	4	5	4	20	Rejected. Low cost approach; however, long-term risk of sections of the existing single-walled ETF line does not out-weigh the benefits
6	Run underground and co-mingle with buried UP-1 line(s)	Use the existing underground ETF line and tie into the new UP-1 lines at the wells to run underground to the 2WP&T	5	8	5	4	5	27	Rejected. No cost or operational advantages and no reason to run underground if co-mingled with UP-1 wells
7	Run tanker truck with no dedicated line	Long-term tankering of leachate. No installation of new lines, but an offloading station at 2WP&T will be required	8	3	8	8	8	35	Rejected. Overall-expensive and operationally-intensive option that would be unlikely to receive regulatory buy-in
8	Run new above ground line in optimal route and keep ETF line or tankering as a back-up	Run new dedicated above ground line from the ERDF transfer station to 2WP&T along simplest route. Implement a strategic operations plan in winter months to avoid freezing. Sending leachate to ETF or tankering to 2WP&T would provide options during winter freeze periods	1	1	7	7	7	23	Rejected. Low-cost option; however, a strategic winter operating plan without additional leachate storage at ERDF has high risk. Additionally, tankering and the ETF back up are not viable options for the long term

Note: Ranking of 1 through 8 for Cost, Schedule, Operations, Sustainability, and Risk

Note: Risk is based on overall project success, both short and long term

Figure 1-3. Routes for Options 1 and 2

2.0 Functions and Requirements

2.1 Process requirements

A design is required that will transfer ERDF leachate from the ERDF Leachate Pump House to the 2WP&T RAD Building. The design must accommodate leachate production rates, leachate storage tank limits, and freezing conditions that would transfer leachate through exposed piping. Transfer of leachate will be controlled from the 2WP&T facility. The project will use the existing ERDF Leachate Pump House with limited modifications. Additionally, the project will maintain the ability to transfer leachate to ETF for treatment as a contingency. The following are specific functions and requirements of the project.

2.2 Facility upgrades requirements

- Modification of the ERDF Leachate Pump House will include the following functions:
    - The desired flow range through the installation of new pumps or modification of the existing transfer pumps and/or motors.
    - Automation of the pumps in the ERDF Leachate Pump House to enable operation from the 2WP&T facility.
    - Remote monitoring and flow control through installation of new flow metering or modification of existing flow metering.
    - Remote monitoring of the ERDF leachate tank levels using existing level transducers and control system to ensure minimum of ~1 foot of leachate is maintained in the tanks to protect the tank liners.
- The new transfer piping system will transfer leachate approximately 13,000 linear feet from ERDF to 2WP&T. Benefits and risks of using sections of the existing pipe to transport leachate from the ERDF Leachate Pump House to 2WP&T should be evaluated. Unless a suitable alternative plan can be put in place, ERDF leachate transfers to 2WP&T will be required year round.

2.3 Preferred technology

The process design will consider the use of existing Hanford Site and 2WP&T designs for the ERDF Leachate to 2WP&T project, specifically:

- Siemens S7 Control system
- Adjustable frequency drives (AFD)
- High-density polyethylene (HPDE) pipe
- Fiber optic (FO) communications cabling
- Road crossing designs

2.4 Operational effectiveness

- The system will shut down on loss of site power, (i.e., there is no requirement for back-up power), and systems will not restart without operator initiation.

- All operator instruments or adjustments shall be designed for ergonomic access from the ERDF Leachate Pump Station operating floor level, or will be provided with suitable permanent access arrangements.

2.5 Unique environmental protection requirements

ERDF leachate is a delisted RCRA waste in accordance with EPA Superfund Record of Decision Amendment EPA/AMD/R10-99/038, March 1999, The delisting is conditional because the contaminant concentration requirements specified in the amendment and in the sampling and analysis plan attached to the amendment must continue to be satisfied and management of the leachate must comply with the sampling analysis plan and leachate management plan, as approved by EPA.

The leachate management plan is found in WCH-182, Rev. 2, Environmental Restoration Disposal Facility Leachate and Wash Water Management Plan, December 2013.

Regulatory sampling of the ERDF leachate is conducted by the ERDF staff on a semi-annual basis with additional bi-annual sampling for a wider range of analytes. As the concentration of contaminants historically has not varied significantly, this frequency is sufficient for 2WP&T operational (and regulatory) requirements.

The sampling and analysis requirements defined in the 2WP&T O&M Plan (DOE/RL-2009-124, 200 West Pump and Treat Operations and Maintenance Plan) will be updated to incorporate the ERDF leachate transfer system configuration. This plan outlines the activities necessary to operate, maintain, and monitor performance of the 2WP&T and associated pumping system for the time frame from completion of construction through decommissioning.

2.6 Design life

The nominal design life for the project is 25 years to generally coincide with the design life of the 2WP&T facility. Replacement of transfer pumps or other equipment in the ERDF leachate transfer system is anticipated to occur during this period as part of ongoing maintenance activities. Therefore, design for ease in replacement will be a requirement.

2.7 Waste acceptance criteria

The transfer line system generates no regulated wastes except the spent filters, which are expected to meet criteria similar to 2WP&T solid waste. The 2WP&T solid waste (e.g., spent IX resin) will meet the disposal requirements of ERDF, in WCH 191, Environmental Restoration Disposal Facility Waste Acceptance Criteria, and 0000X DC W0001, Supplemental Waste Acceptance Criteria for the Environmental Restoration Disposal Facility.

3.0 Project Inputs

3.1 Systems, structures, or components

3.1.1 Utility interfaces

Any tie-ins to existing utilities shall be coordinated and approved by the site approving authority (e.g., electrical utilities organization). Leachate transfer pipe routing shall be approved by the site approving authority (e.g., electrical utilities organization), specifically for easements for electrical services surrounding and near power poles.

Interfaces with MSA for road crossings and traffic control will be essential. Likewise, coordination with MSA will be necessary for installation and excavation around active water, sewer, communications or other buried infrastructure.

3.1.2 Facility interfaces

- Interrelationship with ERDF. Communication with ERDF operations will be maintained through regularly scheduled meetings to ensure that ERDF operations are coordinated with the modifications at the ERDF Leachate Pump House and operation of the leachate storage tanks.
- Modifications to the ERDF Leachate Pump House will be made to an operating facility. Tie-ins for piping, pumps, electrical, instrumentation, Program Logic Control (PLC) hardware and software will require coordination with facility operations. A maximum duration of one (1) month down time for installation and disruption of functions for installation at ERDF will be allowed due to limitations of leachate storage.
- Installation of the leachate transfer piping in and around the ERDF site will be closely coordinated to not interfere with ERDF waste transport operations as well as normal vehicle access to the site.
- Interrelationship with 200-UP-1 Project and 2W P&T Facility. Communication with the UP-1 project and 2WP&T facility will be maintained through regular meetings to ensure that scheduling and work control issues are coordinated throughout the term of the project, specifically the implementation phase.

3.1.3 Process system interfaces

The following ERDF and 2WP&T facility project work is expected to be in progress when construction of this project begins:

- Installation of the UP-1 extraction wells and uranium treatment system at the 2WP&T RAD building.
- Installation of injection wells from ITB-1 (YJ-15, YJ-23, and YJ-9)
- Installation of extraction wells to ETB-1 (YE17 and YE20)
- Installation of extraction well to BIO Building (YE-14)
- Installation of a safety shower currently planned south of the Tc-99 IX skids
- Coordination with cultural and natural resource management personnel shall be performed as part of excavation permitting and field piping layout. Where possible, pipeline routes will be selected to minimize disturbance of existing plant life and wildlife resources. Coordination with cultural and natural resource management personnel shall be performed as part of the route selection and excavation process.

3.2 Nuclear safety

The preliminary hazard classification (HC) for introduction of ERDF leachate into the 2WP&T facility indicates that this project (and associated facilities) remains a less than-hazard category 3 (HC-3) (SGW 40032, Soil and Groundwater Remediation Project Facility Hazard Categorization, which implements DOE-STD-1027-92, Hazard Categorization and Accident Analysis Techniques for Compliance with DOE Order 5480.23, Nuclear Safety Analysis Reports).

3.3 Design assumptions

- The 200-UP-1 uranium treatment system will be operational prior to startup of the ERDF leachate transfer system to 2WP&T.
- ERDF has two 400,000 gallon leachate storage tanks with a nominal storage capacity of approximately 480,000 gallons of leachate available for normal operating conditions. Consequently, batch transfers can be coordinated from the 2WP&T facility optimally with operational activities.
- The existing 2WP&T injection system is sufficiently sized to accommodate the additional ERDF leachate batch flows without the need for additional injection wells.
- The ERDF Leachate Pump House will have adequate floor space for the modifications planned by this project.
- The ERDF Leachate Pump House HVAC system is adequate for this project's modifications.
- The ERDF Leachate Pump House has sufficient power for the upgrades
- Double wall pipe is not required for the leachate transfer piping system as the leachate is a delisted RCRA waste, in accordance with the ERDF ROD Amendment of 1999.
- No modifications of the ERDF Leachate Pump House enclosure are required (e.g. increasing door size or adding doors).
- The existing PVC piping for transfer to ETF may be evaluated for use as part of the leachate transfer piping system.
- The pumps sized for transfers to 2WP&T will also operationally be able to transfer to ETF as a contingency.
- Special protective coating is not required for the ERDF Leachate Pump House floor.
- Truck load-out capability at the ERDF Leachate Pump House will be required to continue.

4.0 Design Criteria

4.1 General criteria

4.1.1 Quality assurance

- The quality assurance (QA) activities will use a graded approach based on the potential impact to the environment, safety, health, reliability, and continuity of operations.
- Both ERDF and 2WP&T are less than-HC-3 facilities. As such, there will not be any safety class or safety significant SSCs. A project-specific QA program plan will not be required for this project.
- The CH2M HILL Plateau Remediation Company (CHPRC) QA Program is composed of PRC MP QA 599, Quality Assurance Program, and implementing documents. PRC MP QA 599 describes how CHPRC implements DOE O 414.1D, "Quality Assurance," and 10 CFR 830, "Nuclear Safety Management." The designer is to implement a QA Program that addresses the criteria stated in PRC-MP-QA-599, as appropriate. Subsequent engineering, procurement, and construction activity shall use PRC-MP-QA-599 as the primary Quality Assurance Planning document.
- CHPRC-00189, CH2M HILL Plateau Remediation Company Environmental Quality Assurance Program Plan, Appendix C, "Soil and Groundwater Remediation Project Quality Assurance Project Plan," describes a graded approach for applying quality levels to items and services on the Soil and Groundwater Remediation Program (S&GRP).
    - Use the approach to applying quality levels as outlined in PRC-PRO-QA-259, Graded Approach, Section 3.0, "Process."
    - Additional Items and Services in S&GRP that are Enhanced Commercial (General Service, Quality Level 3) include the following:
        - Design and construction of critical elements.
        - Testing of instruments used to demonstrate regulatory compliance.
        - Procurement of services or standards used to calibrate instruments used to collect environmental data.
- Procurement of selected items that are susceptible to counterfeiting are described in DOE G 414.1-3, Suspect/Counterfeit Items Guide for Use with 10 CFR 830 Subpart A, Quality Assurance Requirements, and DOE O 414.1B, Quality Assurance (e.g., graded fasteners, circuit breakers, ratchet type tie downs, and other items as determined by the Design Authority and QA). Purchase orders for such items shall include clauses or statements regarding procurement of potentially suspect or counterfeit items and shall require receipt inspection.
- Some structures, systems, or components (SSCs) may be Enhanced Commercial (General Service, Quality Level 3) as described in PRC PRO-QA-259, Graded Approach such as ASME code items (requiring independent verification), and procurement of items shown to be vulnerable to counterfeiting (requiring receipt inspection). Items will be specified and procured in accordance with the codes and standards defined in Section 17.0.
- Additional QA requirements for this project follow:
    - Any materials or components that, due to economic constraints must be tolerated by design as a single point of failure with respect to safety of life, health, and property, must appear in a suitable inspection plan, or in a submittal of an inspection report:

- o QA inspection plan (e.g., National Electrical Code inspection)
- o Engineer's inspection report

- Other material and components that are not single points of failure but may have some consequence with respect to safety of life, health, and property. These will require individual engineering assessment of any risks remaining with partially redundant systems, throughout the course of design. Specifications, submittals, inspection plans, and reports are to be included, as appropriate.

4.1.2 Regulatory compliance

WCH is preparing an Explanation of Significant Differences (ESD) for the ERDF landfill. The ESD includes language to enable treatment of ERDF leachate at a location other than ETF, which is the current treatment facility. The ESD approval process is being monitored by the project team to ensure timely approval of the ESD by the completion of the design process for this project. If regulatory approval of the ESD is not assured in a timeframe agreed to between WCH and CHPRC, alternative actions will be taken to ensure regulatory compliance for the project.

No environmental permitting actions are required by the 2WP&T facility for this project, as the 2WP&T facility is under the authority of the CERCLA. The 2WP&T facility will achieve substantive compliance with applicable or relevant and appropriate requirements (ARARs) in state and federal codes and regulations.

4.1.3 Flexibility and future expansion requirements

The new Uranium System Inlet Tank (USIT) in the 2WP&T RAD Building is sized to accommodate an influent flow rate of two IX trains at 400 gpm each plus 100 gpm to accommodate tanker-truck load out. However, the design capacity influent from tanker-truck load out will seldom be used. Therefore, capacity exists at the 2WP&T facility to accommodate the maximum flow from the ERDF leachate transfer system.

The ERDF leachate transfer system will allow capacity for future expansion of the ERDF landfill and the resulting increase of leachate. The project will allow for transfer of leachate over a broad range of flow rates to enable various scenarios of batch transfer of leachate to accommodate the 2WP&T facility.

4.1.4 Human factors

The design should be consistent with the guidance of DOE-HDBK-1140-2001, Human Factors/Ergonomics Handbook for the Design for Ease of Maintenance.

4.1.5 Cleanliness and foreign material exclusion

Cleanliness and foreign material exclusion requirements throughout the project life-cycle (manufacturing, shipment, storage, installation, operation, and maintenance) will be in accordance with PRC-PRO-QA-33415, Structures, Systems, Components Cleaning/Cleanliness and Foreign Material Exclusion.

- During shipment and installation, precaution will be taken to keep foreign material out of all piping and piping systems. These precautions include the following:
  - o Ensure the initial removal of any deleterious contaminants
  - o Minimize the introduction of foreign materials into interior surfaces and spaces
  - o Ensure the cleanliness of SSCs during/after installation, operation, maintenance, repair, or modification

- Extra precaution to exclude foreign material is to be taken when installing the transfer piping across the ground. All piping shall be flushed and/or mechanically cleaned prior to turn-over.
- The following materials shall be prohibited in equipment and components:
  - Exposed lead
  - Ozone depleting refrigerants
  - Asbestos

4.2 Process design criteria

4.2.1 Leachate characteristics

Based on a review of the sampling history of the ERDF leachate, the leachate will be treatable at the 2WP&T facility once the uranium ion exchange columns are installed as part of the 200-UP-1 project. Treatment process effectiveness and flow rates are based on the leachate characteristics summarized in Tables 4-1 and 4-2. Concentrations outside this range will impact treatment effectiveness when the leachate is combined with other streams. Nitrate and Uranium are of particular concern. These concentrations were based on the 75th percentile values from periodic monitoring of the leachate from March 2011 to March 2013.

Table 4-1 Contaminants of Concern

Contaminant	Concentration	Units
Nitrate	283	mg/L
Uranium	1342	ug/L
Technetium-99	373	pCi/L
Total Chromium	48	ug/L
Hexavalent Chromium	12	ug/L
Tritium	70550	pCi/L
Strontium	981	ug/L
Carbon tetrachloride	Below Detection	
Trichloroethylene	Below Detection	
Iodine-129	Below Detection	
Plutonium-239/240	Below Detection	
Cesium-137	Below Detection	

Table 4-2 Constituents Impacting Treatment

Contaminant	Concentration	Units	Impact Summary
Ammonia-N	0.1	mg/L	Key nutrient in biological process
TOC	6.4	mg/L	source of carbon substrate
Oil and Grease	4.3	mg/L	Can plug processes or result in undesirable growth in excess amounts
TSS	9.3	mg/L	Can plug processes

4.2.2 Process design

- It is anticipated that leachate will be transferred to the 2WP&T facility in "batch" mode. The average flow rate requested by the 2WP&T engineers is approximately 20 gpm when the batch transfers take place.
- The transfer process will be sized for a minimum operating flow rate of twenty (20) gallons per minute and a maximum operating flow rate of 80 gallons per minute.
- The ERDF leachate liquid temperature entering the RAD Building will typically range from 33° to 100°F depending upon ambient temperatures and the temperature of the leachate in the ERDF storage tanks. The piping maximum design temperature will be 110°F.
- Modifications to the existing 6" PVC pipe shall be installed per the existing Construction Specification, ***E29280-C1 Groundwater Pipeline Tie-Ins***. (Pipe Code P-1 and M-1). See Attachment 1
- Freeze protection (buried or bermed below frost depth, or heat traced) is required or an alternative that avoids freezing of the line to allow for winter transfer.
- Piping and instrumentation diagrams shall show all process equipment, instruments, and physical interlocks or governances in compliance with PRC-STD-EN-40279, Engineering Drawing Standards, and be consistent with existing drawings.
- A process flow diagram will be prepared during conceptual design. The format is to be consistent with PRC-STD-EN-40279.

4.2.3 Mechanical

ERDF Leachate Pump House

The ERDF Leachate Pump House shall include, but not be limited to, the following modifications:

- Installation of two (2) new transfer pumps or modification of the existing two (2) transfer pumps and/or motors to achieve the desired flow range. It is anticipated that both pumps will be equally sized for redundant operations. However, alternative options will be considered.
- Pumps will be controlled by AFDs or if preferable, through automated valves.
- If practical, pumps shall be sized to preclude installation of pressure relieving devices on the transfer piping systems.
- Based on recent site experience, NIBCO® Brand PVC ball valves shall not be used. Hayward® or Asahi brand valves are preferred. Flange connections will be rated at 150 psi.
- Use, to the maximum extent possible, equipment of the same make/model as that currently used in the ERDF Leachate Pump House and/or 2WP&T.
- Coordination of equipment and materials with the 200-UP-1 project is essential
- Pump modifications shall be designed in compliance with applicable, or relevant and appropriate requirements of ASME B73.1, Specification for Horizontal End Suction Centrifugal Pumps for Chemical Process, or ASME B73.2, Specifications for Vertical In-Line Centrifugal Pumps for Chemical Process. Hydrostatic and in-service leak/pressure testing shall be conducted in accordance with the standards for the selected materials and function.
- Mechanical and electrical components and their supports to the structure shall be per ASCE/SEI 7 05, Section 13.6.

- Anchor bolts: Hilti Kwik Bolt, TZ, stainless steel, or equal in accordance with SGW-54023, 05 50 00.01-Metal Fabrications. Anchor bolts shall be certified by the International Code Council (ICC).
- Housekeeping pads shall be provided for pumps.

4.2.4 Electrical

- Power for the new or modified transfer pumps will be supplied from the existing motor control cabinet (MCC), MCC-L (0600X-DD-E0012, MCC-L One Line Diagram - 1) in the ERDF Leachate Pump House and existing 480 VAC, 3-phase panel board. Conduit will be run overhead to a new electrical rack with a disconnect switch and an AFD if required for each transfer pump.
- The main 480 V power panel at the ERDF Leachate Pump House has several spare sections and should have enough power. Upstream sources will be examined if necessary in the course of performing the design to satisfy the NEC.
- All electric driven pumps and motorized equipment greater than or equal to ½ horsepower (HP) will be 480 VAC, and all motors greater than ¼ HP will be three phase to minimize motor maintenance.
- All control systems equipment and wiring will be 24 VDC.
- Freeze protection heat tracing may be required for the exterior section of leachate transfer piping entering the 2WP&T RAD Building. If so, power to the heat tracing will be supplied by new circuits from an existing heat trace panel HTP- Y00A (H-2-833599, Sheet 19, *Electrical Heat Trace Panel Board Schedules*). Voltage to electric heat tracing for piping freeze protection will be 120 VAC. Power connection kits for heat tracing shall be provided with a visible red indicator light above grade.
- Electrical design and any required extension of the utilities distribution system, shall comply with Mission Support Alliance Electrical Utilities organization and engineering standards, IEEE C2 2007, National Electrical Safety Code, National Electrical Code, NFPA70, and NFPA70e Standard for Electrical Safety in the Workplace.
- Arc flash calculations for distribution components and loads, starting with the service transformer primary fuse, are required and shall be performed in accordance with IEEE Std 1584-2002, IEEE Guide for Performing Arc Flash Hazard Calculations.
- All outdoor electrical enclosures shall be NEMA Standards Publication 250-2008, Enclosures for Electrical Equipment (1000V Maximum), rated dust-tight, water/rain proof, NEMA 4.
- Indoor electrical and instrument enclosures shall be NEMA Standards Publication 250-2008, Type 1 or 12.
- Panel boards shall be in accordance with NEMA Standards Publication PB 1-2006, Panel boards, and NEMA Standards Publication PB 1.1-2007, General Instructions for Proper Installation, Operation, and Maintenance of Panel boards Rated 600 Volts or Less.
- Power supplies fed by 120 VAC or other voltage ≥50 V will be located in a separate cabinet from the process control communication equipment.
- Electrical equipment installed or used on the Hanford Site shall be approved by the NFPA 70 Authority Having Jurisdiction as described in DOE-0359, Hanford Site Electrical Safety Program (HSESP).

- All motors shall be of total enclosed fan cooled design and shall be in accordance with NEMA Standards Publication MG 1-2009, Motors and Generators.
- No motor disconnect, circuit breaker, or power supply shall be enclosed in the same cabinet with an AFD (if installed).
- Motor disconnect switches shall disconnect the source of power to the AFD housing (if used) rendering the entire AFD housing energy free for electrical worker safety.
- If used, AFD operator interface will be integral to the AFD for use by operating personnel.
- If used, AFDs shall have a built-in, local on/off/auto (remote) function.
- If used, AFDs shall include Siemens S-7 Profibus communication adapters having full access to all configuration parameters and operating status from the PLC. AFDs shall have Profibus communications.
- All electrical wiring subject to NFPA compliance for worker safety will be shown on drawings clearly identified as Electrical drawings, including all wiring of electrical instrumentation and controls.
- Design of electrical over-current and fault protection will be made to accommodate ease of illustrating and tabulating electrical loads, wire sizing, and protection requirements.
- Motors controlled by AFDs will be rated for inverter duty with Class F insulation, or better.
- Conduit inside buildings will be rigid steel.
- All wire will be copper. Minimum wire size will be No. 12 American Wire Gauge (AWG) for power and No. 16 AWG for control wiring.
- Electrical equipment shall be bonded and grounded.

4.2.5 Instrumentation and controls

The ERDF Leachate Pump House transfer pump operations will be controlled by the 2WP&T SCADA system with the following requirements to accomplish the project:

- Automated controls from 2WP&T will interlock and/or control the following:
    - ERDF transfer pumps on/off and flow rate control from 2WP&T
    - ERDF transfer pumps start up with ERDF leachate storage tanks high level, upon request to a predetermined operator set point and shut off at ERDF leachate storage tanks low level, predetermined operator set point, or upon request.
    - ERDF transfer pumps shut off with a high level at the 2WP&T, Uranium System Inlet Tank, USIT-Y10
    - ERDF transfer pumps shut off if the ERDF Leachate Pump House flow meter and the 2WP&T flow meters display substantial differential flows (yet to be determined) for leak detection.
- Modifications of 2WP&T SCADA readout and graphics to incorporate the ERDF Leachate Pump House transfer pump controls will be designed and performed by the 2WP&T SCADA team.

- The industrial control system shall be a Siemens S7 Control System for compatibility with existing 2WP&T programmable logic controller (PLC) and human machine interface (HMI) systems. The ERDF Leachate Pump House shall have a dedicated/local Siemens S7 Central Processing Unit (CPU) and Distributed Process Control (DPC) cabinet. Local ERDF Leachate Pump House transfer pump and storage tank monitoring instrumentation shall communicate with the new local CPU and provide existing tank(s) level, level switch alarm inputs, and any additional input necessary to support operations.
- The ERDF Leachate Pump House transfer pump and equipment will be remotely operable from the centrally located 2WP&T SCADA station. All treatment and normal process warning indications and alarms associated with the transfer pump operations will be remotely visible and acknowledgeable at the central SCADA station. All relevant treatment and normal process measurements and status indications will be visible remotely.
- The control system physical design and equipment will accommodate remote controls via HMI and PLC. The principal point of control is setting of the flow rate by the operator via HMI user interface.
- Measuring instruments and transmitters will be provided sufficiently for remote monitoring of each process variable (i.e., flow measurement, each pump discharge pressure (speed), each tank level, each AFD or throttle valve position, and any other process attribute used for control. Existing instrumentation will be evaluated to determine if the data from the existing ERDF PLC can be utilized. Sufficient process control actuators (i.e., adjustable frequency pump drives, motor operated throttling valves, motor controllers) will be provided to remotely control process variable.
- Transfer pumps shall have flow indicating transmitters on the discharge side of the pump, pressure indication on the suction side, and a pressure indicating transmitter on the discharge side piping.
- Heat trace controllers, if needed, will be microprocessor/PLC based and provide for local control as well as interface with the 2WP&T SCADA system for remote alarming.
- Power for control circuits from 2WP&T shall be 24 volts direct current (VDC) Class 2 power limited supplies to the extent possible.
- All motorized equipment will be both remotely and locally operable and have a local Remote Off switch.
- Control cabinets will have ≥50 V sources separated and terminals guarded to allow access to cabinet without lock and tag.
- Instrument transmitters will include local indicators, and their display configuration will be locally accessible without special communication or programming devices. Hart communicator compatibility should be considered during design.
- The manufacturer's calibration certificate is to be submitted during procurement or construction as certified vendor data for future engineering decisions regarding vendor quality control. An evaluation of instruments requiring calibration will be documented in SGW-52035, 200W Pump and Treat Instrument Calibration Evaluation.
- Construction inspection or acceptance test reports shall ensure that instruments are installed and configured in accordance with the facility design and manufacturer's installation instructions.

- Process control software functions that are essential to conduct of operations are to be identified in acceptance tests to be performed during the design, procurement, or construction of the facility.
- Provide separately powered end of line active termination resistors for Profibus cabling when multiple Profibus devices are installed in series.
- Communications for remote monitoring and control of the ERDF leachate transfer pumps, flow meters and leachate storage tank levels will be via a new FO cable. New FO cabling shall be routed from the ERDF Leachate Pump House to the 2WP&T RAD Building. FO cable will enter the RAD Building on the west side and connect to the existing FO switch in the building.
- Provide a new single mode module for the existing FO switch or media convertor.

4.2.6 Civil and structural

- A preferred route (Option 1) has been identified. However, other routes and options for the project should be considered.
- HDPE is a proven material for the transfer pipe, but alternative options should be evaluated including various PVC options.
- HDPE/PVC transfer piping shall be limited to 150 psig at a design temperature of 110°F outside and 103°F inside to avoid having additional lock and tag requirements imposed on operation personnel when performing maintenance activities.
- The project will be designed for batch transfer of an average of 170,000 gallons per month at an average of 20 gpm. At that rate, transfers will take approximately 142 hours/month or approximately 6 days/month at 24 hours/day.
- Transfers will take place during both attended and unattended periods at both ERDF and 2WP&T. Both ERDF and the 2WP&T facility are manned for 40 hours/week (nominally 4 × 10 hours/day). The 2WP&T has in place a control system with an automated calling system that during an unexpected shutdown would notify responsible personnel to begin response operations.
- If the piping system is run underground, piping shall be sleeved where it crosses sanitary/raw water lines. PVC saddles shall not be used.
- Pipe diameter will be determined from flow requirements.
- Connection of the new transfer line will be at the ERDF Leachate Pump House unless a case can be made for using the existing transfer pipe.
- The existing ETF pipe will be tied in to the new ERDF line with a manually operated valve box to enable emergency transfer of leachate to ETF. If transfers are required to be made to ETF, the transfers will be made using manual controls and operations and coordinated with ETF operations.
- Leak detection derived from substantially different flow metering at the ERDF Leachate Pump House from the 2WP&T RAD building flow metering is required. If the line is buried or bermed, a process should be in place to identify the location of leaks.
- Warning signs will be posted where pipelines carrying contaminated water intersect or are along roads to caution site visitors and workers that the pipeline contains contaminated leachate.

- Underground utility marking tape will be installed where pipe is buried.
- Piping will enter the 2WP&T RAD building via a concrete encased duct bank and then through existing pipe sleeves on the west side of the building or if necessary an alternative approach may be required for freeze protection. The existing pipe sleeves will need to be evaluated if the diameter will allow for freeze protection.
- It is the preference of the project to install the leachate transfer piping at grade wherever possible covered with an earthen berm of appropriate thickness for thermal protection to allow for batch transfers through all seasons. The berm will be covered with earthen (i.e., cobble) material acquired on site of a diameter and weight to resist wind erosion. However, other design options are encouraged.
- The preferred pipe material will be of fusion-welded, HDPE designed, installed, examined, and tested to ASME B31.3, Process Piping, for Category D Fluid Service. A recommendation on the functional advantages and differences of single-wall versus double-wall pipe is required for the design review. Materials other than HDPE such as PVC may be used with the approval of the project team.
- Roadway crossings will be designed in accordance with Washington State Department of Transportation (WSDOT) M 41-10, Standard Specifications for Road, Bridge, and Municipal Construction. Standard 2WP&T road crossing designs have been generated and shall be used as applicable. However, freeze protection issues will need to be considered. Two additional pipe sleeves shall be included at each new road crossing to accommodate future pump and treat expansion. Where possible, coordination with the 200-UP-1 project to derive efficiencies regarding road crossing locations should be achieved. The construction planning should include appropriate Mission Support Alliance (MSA) road closure time limits for installation.
- Sufficient excess pipe sleeves currently exist to allow for the ERDF leachate to 2WP&T project road crossing of Beloit Avenue near the 2WP&T facility. Freeze protection will need to be considered in using this crossing. Wherever practical, coordination with the 200-UP-1 project should be made to optimize road crossings.
- Piping shall be designed and installed in accordance with ASME B31.3, Category D fluid service.
- Pipe hangers and supports shall be per MSS SP-58-2009, Pipe Hangers and Supports – Materials, Design, Manufacture, Selection, Application, and Installation, and ASME B31.3.
- Steel design, fabrication, and installation shall be in accordance with the American Institute of Steel Construction (AISC) Steel Construction Manual.
- Weld design and fabrication shall comply with the applicable American Welding Society (AWS) Standards: AWS D1.1, Structural Welding Code – Steel; AWS D1.6, Structural Welding Code – Stainless Steel.
- Concrete design and installation shall be in accordance with the American Concrete Institute (ACI) (ACI 301, Specifications for Structural Concrete; ACI 318, Building Code Requirements for Structural Concrete).
- Metal framing channel systems shall be used for pipe supports.
- New equipment and/or repair of damaged surfaces, as a result of the installation of this project, shall be painted with a system to match the existing specified coating.

4.3 Facility criteria

4.3.1 Natural phenomena hazards criteria

The 2WP&T facility is a performance category one (PC-1), as shown by the hazard analysis (SGW-47266).

Natural Phenomena Hazard Criteria shall conform to the guidelines in PRC-PRO-EN-097, Engineering Design and Evaluation (Natural Phenomena Hazard), as follows:

Wind Design:

ASCE/SEI 7-05 (Minimum Design Loads for Buildings and Other Structures):

- Basic Wind Speed (3-second gust) 85 mph
- Exposure Category C
- Importance Factor 1

Seismic Design:

ASCE/SEI 7-05:

- Mapped Spectral Response Accelerations:
- S_S 0.463 g S_{MS} 0.555 g
- S_1 0.148 g S_{M1} 0.244 g

Design Spectral Response Accelerations:

- S_{DS} 0.370 g
- S_{D1} 0.163 g

Other Design Parameters:

- Site Class C
- Occupancy Category II
- Seismic Design Category C
- Importance Factor, I 1.1
- Response Modification Factor, R 3.0

The Structural design of the ERDF Leachate Pump House is based on the following parameters:

Structural Engineering WCH-56 Rev. 5

ERDF (200 East and 200 West)

Seismic Use Group:(DOE STD 1020-0202) I for PC-1
III for PC-2

Occupancy Importance Factor:(DOE STD 1020-0202) I_E = 1 for PC-1
I_E = 1.5 for PC-2

Seismic Design Category: D (IBC 2009, Tables1613.5.6)
Site Class: C
Short Period Ts = 0.2 sec
1-secend Period T1 1 sec

Mapped Spectral Accelerations, Ss and S1,
S_s = 0.80 g
S_1 = 0.18 g

Site Coefficients, F_a, F_v: (IBC 2009, Tables 1613.5.3(1) and 1613.5.3(2)
F_a = 1.1
F_v = 1.6

Maximum Considered Spectral Accelerations, S_{M2}, S_{M1}: (Ref: IBC 2009, Section 1613.5.3)
$S_{M2} = F_a S_s$ = 0.882 g
$S_{M1} = F_v S_1$ = 0.288 g

Horizontal Design Spectral Accelerations Parameters, S_{Ds} and S_{D1}: (Ref: IBC 2009, Section 1613.5.4)
$S_{Ds} = (2/3) S_{M2}$ = 0.588 g (Fig. 4-1)
$S_{D1} = (2/3) S_{M1}$ = 0.192 g (Fig 4-1)

Design Spectral Accelerations: (Ref: ASCE 7-05 Section 11.4-5)
$T_0 = 0.2*(S_{D1} / S_{Ds})$ = 0.07 Sec
$T_s = (SD1 / SDs)$ = 0.33 Sec

I_E = 1 for PC-1
$S_a = SDs[0.4+0.6(T/T0)]$ = 0.24 g at T= zero period
$S_a = S_{Ds}$ = 0.588 g at T=0.09 - 0.46 sec.
$S_a = S_{D1} / T$ = 0.06 g at T=more than 3 sec.

I_E = 1.5 for PC-2
S_a = 0.35 g at T= zero period
S_a = 0.88 g at T=0.09 - 0.46 sec.
S_a = 0.10 g at T=more than 3 sec.

Vertical Design Spectral Accelerations Parameters, S_{Ds} and S_{D1}:

S_{Ds} = 0.346 g
S_{D1} = 0.098 g

- The range of outdoor temperatures is -23°F (February 1950) to +113°F (August 1961), as reported by the Hanford Meteorological Station.
- The frost depth for the Hanford site is 30 inches below surface. WCH requirements, as well as general Hanford site guidance is for 42" of cover above buried pipe.
- The 200 West Area is outside of a floodplain according to PRC-PRO-EN-097.

4.4 General requirements

4.4.1 Regulatory sampling requirements.

The ERDF leachate is a delisted waste. Regulatory sampling of the ERDF leachate is conducted by the ERDF staff, on a semi-annual basis, with additional bi-annual sampling for a wider range of analytes. As the concentration of contaminants historically has not varied significantly, this frequency is sufficient for 2WP&T operational (and regulatory) requirements.

The sampling and analysis requirements defined in the 2WP&T O&M plan (DOE/RL-2009-124, 200 West Pump and Treat Operations and Maintenance Plan) will be updated to incorporate the ERDF leachate transfer system. This plan outlines the activities necessary to operate, maintain, and monitor performance of the 2WP&T and associated pumping system for the time frame from completion of construction through decommissioning.

4.4.2 Maintenance provisions

- The system design shall provide for routine preventive maintenance/calibration where required, and maintenance, repair, or replacement of equipment subject to failure.
- Adequate space for equipment maintenance and repair shall be provided. To the degree practical, the design of equipment should allow for in-place repair to minimize space requirements for equipment maintenance and repair.
- Design shall consider such items as changing of filters, access to instrumentation, access to valves, and pump maintenance.

4.4.3 Radiation safety

The transfer facility is a non-radiological facility and no radiological controls are necessary. If in the future, radiological sources were to be introduced any additional design will adhere to the requirements of 10 CFR 835, "Occupational Radiation Protection," Subpart K, "Design and Control," including the objective of maintaining exposure levels below an average 0.5 millirem per hour and as far below this average as low as reasonably achievable (ALARA). Radiological design reviews in accordance with PRC PRO-RP-1622, Radiological Design Review Process shall be performed to evaluate ALARA design aspects.

4.4.4 Industrial hygiene

Coordination with Industrial Hygiene (IH) organization will be performed during remedial design and construction. The project will strive to control and prevent hazards through recognizing, evaluating, and controlling the risk. Elements of IH controls shall be through such features as elimination (designing hazards out); substitution (using other materials); engineering controls (isolation and guarding); administrative controls (training and procedures); and personal protective equipment.

4.4.5 Industrial safety

- Minimize overhead obstructions to the maximum extent practicable, which could create head bumping hazards.
- Where required, machine guarding shall meet the requirements of 29 CFR 1910, "Occupational Safety and Health Standards," Subpart O, "Machinery and Machine Guarding."
- If the design is such that an individual may be exposed to injurious corrosive materials, adhere to the requirements of 29 CFR 1910, "Occupational Safety and Health Standards," Subpart K, and ANSI/ISEA Z358.1-2009, American National Standard for Emergency Eyewash and Shower Equipment.

- As applicable by design, elevated surfaces shall adhere to requirements set forth in 29 CFR 1910, "Occupational Safety and Health Standards," Subpart D, "Walking-Working Surfaces."

  Design of systems and facilities shall consider the energy isolation controls of DOE-0336, Hanford Site Lockout/Tagout Procedure. Individual disconnects for each piece of equipment, within line-of-sight of the equipment, will be installed.

4.4.6 Fire protection

- The project will not be interfacing with or modifying existing fire protection systems or fire water supplies, nor is any new fire protection measure required.
- The fire loading from the modifications to the ERDF Leachate Pump House shall be determined and an update of the existing Fire Hazard Analysis shall be performed.

4.4.7 Environmental protection and pollution control

The project shall seek to minimize the impact of existing plant life and wildlife resources through the site selection process. Where undisturbed habitat must be used, the footprint will be limited and appropriate biological, ecological, and cultural resources reviews will be conducted.

4.4.8 Equipment and instrument identification and labeling

- Unique identification tags are required for all equipment meeting any of the following conditions:
  - Subject to failure
  - Manually operable
  - Has a purpose in, or is the object of safety lock-out
  - Valve manifolds for line-up
- The labeling scheme shall match the naming convention developed for ERDF or the 2WP&T facility as appropriate.
- Component (instrument, valves, equipment) model numbers shall be shown on drawings or other configuration baseline documents to facilitate maintenance.

4.4.9 Safeguards and security

- Nuclear Material Control and Accountability. The project will not handle, process, or store nuclear material.
- Physical Security. Because the project will not involve classified matter, security clearances will not be required and no special safeguards and security measure beyond that required for property protection are required. Security of buildings will be maintained by coded locks.
- Information Security. The project will not include classified matter or classified information.

4.4.10 Decontamination and decommissioning

- Demolition of existing facilities or equipment is not required as part of this project.
- The decontamination and decommissioning of the ERDF leachate transfer system to 2WP&T will be addressed after the DOE Richland Operations Office and EPA determine that the treatment system is no longer required to support the implementation of the remedial action. Decontamination and decommissioning of the system will be performed in accordance with the CERCLA process.
- Design of the systems will consider that all above ground SSCs installed will ultimately be removed and disposed at the end of their useful life. Material that comes in contact with hazardous materials should consider the ease with which it can be decontaminated to acceptable levels for handling and disposal.

5.0 Codes and Standards

The codes and standards cited in this chapter are applicable to the ERDF leachate to 2WP&T project remedial design and shall be implemented, as appropriate.

5.1 Architectural/Civil/Structural

Standard Number/Reference	Title
American Concrete Institute (ACI)	
ACI 301	Specifications for Structural Concrete
ACI 318	Building Code Requirements for Structural Concrete
American Institute of Steel Construction (AISC)	
AISC	Steel Construction Manual, 13th Edition
American Welding Society (AWS)	
AWS D1.1	Structural Welding Code – Steel

5.2 Mechanical

Standard Number/Reference	Title
American Society of Mechanical Engineers (ASME)	
ASME B31.3	Process Piping
ASME B73.1	Specification for Horizontal End Suction Centrifugal Pumps for Chemical Process
ASME B73.2	Specifications for Vertical In-Line Centrifugal Pumps for Chemical Process
ASME RTP-1	Reinforced Thermoset Plastic Corrosion-Resistant Equipment
U.S. Department of Energy (DOE)	
DOE/RL-92-36	Hanford Site Hoisting and Rigging Manual

5.3 Electrical

Standard Number/Reference	Title
U.S. Department of Energy (DOE)	
DOE-0336	Hanford Site Lockout/Procedure
DOE-0359	Hanford Site Electrical Safety Program
Institute of Electrical and Electronics Engineers (IEEE)	
IEEE C2-2007	National Electrical Safety Code[illegible]
Standard Number/Reference	Title
IEEE Std 1584[illegible]-2002	IEEE Guide for Performing Arc-Flash Hazard Calculations
National Electrical Manufacturers Association (NEMA)	
NEMA Standards Publication 250-2008	Enclosures for Electrical Equipment (1000 Volts Maximum)
NEMA Standards Publication MG 1-2009	Motors and Generators
NEMA Standards Publication PB 1-2006	Panelboards
NEMA Standards Publication PB 1.1-2007	General Instructions for Proper Installation, Operation, and Maintenance of Panelboards Rated 600 Volts or Less
National Fire Protection Association (NFPA)	
NFPA 70[illegible]-2008	National Electrical Code[illegible]
NFPA 101[illegible]	Life Safety Code[illegible]
NFPA70e	Standard for Electrical Safety in the Workplace
NFPA 79[illegible]	Electrical Standard for Industrial Machinery

5.4 Washington State Codes

Standard Number/Reference	Title
WAC 173-303-016	"Identifying Solid Waste"
WAC 173-303-017	"Recycling Processes Involving Solid Waste"
WAC 173-303-070(3)	"Designation of Dangerous Waste"
WAC 173-303-071	"Excluded Categories of Waste"
WAC 173-303-073	"Conditional Exclusion of Special Wastes"
WAC 173-303-077	"Requirements for Universal Waste"
WAC 173-303-120(3)	"Recycled, Reclaimed, and Recovered Wastes"
WAC 173-303-120(5)	"Recycled, Reclaimed, and Recovered Wastes"
WAC 173-303-140	"Land Disposal Restrictions"
WAC 173-303-170	"Requirements for Generators of Dangerous Waste"
WAC 173-303-610	"Closure and Post-Closure"
WAC 173-303-630	"Use and Management of Containers"
WAC 173-350-300	"Onsite Storage, Collection, and Transportation Standards"
WAC 173-400-075	"Emission Standards for Sources Emitting Hazardous Air Pollutants"
Standard Number/Reference	**Title**
WAC 173-460-010	"Purpose"
WAC 173-460-030	"Applicability"
WAC 173-460-060	"Control Technology Requirements"
WAC 173-460-070	"Ambient Impact Requirements"
WAC 173-460-090	"Second Tier Review"
WAC 246-247-075	"Monitoring, Testing and Quality Assurance"
WSDOT M 41-10	Standard Specifications for Road, Bridge, and Municipal Construction

5.5 Federal Codes

Number	Title
10 CFR 830	"Nuclear Safety Management"
10 CFR 835	"Occupational Radiation Protection"
29 CFR 1910	"Occupational Safety and Health Standards"
29 CFR 1910.119	"Process Safety Management of Highly Hazardous Chemicals"
40 CFR 300	"National Oil and Hazardous Substances Pollution Contingency Plan"
DOE/RL-92-36	Hanford Site Hoisting and Rigging Manual
DOE G 414.1-3	Suspect/Counterfeit Items Guide for Use with 10 CFR 830 Subpart A, Quality Assurance Requirements, and DOE O 414.1B, Quality Assurance
DOE-HDBK-1100	Chemical Process Hazards Analysis
DOE-HDBK-1140	Human Factor/Ergonomics Handbook for the Design for Ease of Maintenance
DOE O 414.1D	"Quality Assurance"

ATTACHMENT 1

Pipe Codes for 6 inch Groundwater Pipeline

PIPE CODE P-1			
Service	Max Operating Pressure	Test Pressure	Max Operating Temp.
Groundwater Effluent	100 psig	150 psi	100°F
Sizes	6 inch		
Pipe	PVC: In accordance with AWWA C900		
Joints	Elastomeric-gasket joints in accordance with AWWA C900		
Wall Thickness	PVC: Class 150		
Fittings	PVC in accordance with AWWA C907		
Compression Couplings	Compression type similar to, Dresser Style 162, or approved substitute.		

Reference Section 02650 of construction specification E29280-C1

Pipe Codes for 6 inch Groundwater Pipeline

PIPE CODE M-1			
Service	Max Operating Pressure lbf/in² gage	Test Pressure lbf/in² gage	Max Operating Temp. °F
Groundwater Effluent, Vent and Drain	100	150	100
Sizes	6 inch and smaller		
Pipe	Carbon Steel: ASTM A 53, Type E or S, Grade B black steel, or ASTM A 106, Grade B. (1)		
Wall Thickness	Schedule 40		
Nipples	Same schedule as pipe		
Fittings	Threaded as shown on Drawings: ASTM A 105, 3000 lb, threaded in accordance with ASME B16.11. Buttwelded, as shown on Drawings: ASTM A 234, Grade WPB seamless wrought steel, buttwelding in accordance with ASME B16.9. Wall thickness to match pipe. Cast Iron or Ductile Iron, as shown on Drawings: Class 150 in accordance with AWWA C110 with cement lining in accordance with AWWA C104, flanged ends. (2)		
Unions	ASTM A 105, 3000 lb, threaded in accordance with ASME B16.11. Steel to steel seat. No buried unions.		
Flanges	ASTM A 105, Class 150, raised face, slip on in accordance with ASME B16.5. Bore to match pipe ID. Use flat face where mating to flat face flanges. No buried flanges.		
Bolting	ASTM A 193, Grade B6 alloy steel studs and ASTM A 194, Grade 2 heavy hex nuts.		
Gaskets	Spiral-wound, nonasbestos, 0.175 inch thick, with 1/8-inch thick carbon steel gage ring; Garlock Guardian Style 556, or Flexitallic Style CG with flexite super filler. Use full face gaskets with flat face flanges; Garlock "Blue-Gard" Style 3000, or Anchor Packing Style 443A.		

Reference Section 02650 of construction specification E29280-C1

Pipe Codes for 6 inch Groundwater Pipeline

PIPE CODE M-1		
Combination Air Relief/Vacuum Valve and 2" Gate Valve	Sewage combination air valve ARCO Model 445 SCAV-2" inlet and 2" outlet Crane No. 438 gate valve or approved substitute.	
Valves	ASTM A 216, Grade WCB, Class 150, trim for specified service. Manufacturer's standard gaskets, packing and seals.	
Ball	6 inch: Full port, flanged ends 2 inch and smaller: Full port, flanged or threaded ends as shown on Drawings	
Check	6 inch: Flanged in accordance with ANSI/AWWA C508. Bolted cap, swing. Crane No. 147XU	
(1) ASTM A 53 is not readily available in 2 inch and smaller sizes. (2) Cast Iron or Ductile Iron fittings consist of a flanged tee and a flanged 22.5" bend at the tie-in of new piping to existing PVC in the 200 West Area (H-2-827212).		

Reference Section 02650 of construction specification E29280-C1

CHPRC ENGINEERING CHANGE REQUEST/FACILITY MODIFICATION PACKAGE (ECR/FMP)

ECR No: ECR-14-000762

ECR/FMP Title: ERDF Leachate Line to 200 West Pump and Treat

1.0 MODIFICATION DESCRIPTION

Request and Justification:

Design and install ERDF Leachate transfer line from ERDF pump house (building number 6618C) to 200 West Pump and Treat RAD building (building number 289TA) along with associated pumps, motors, instrumentation, and controls.

Currently ERDF leachate is transferred via a pipeline to the Effluent Treatment Facility (ETF) in the 200 East Area for treatment and disposal. With decreasing waste streams to the ETF, unit costs for treatment of the ERDF leachate along with other waste streams have risen. Consequently, an effort is currently underway to facilitate alternative treatment of most of the waste streams currently treated at ETF.

Work Package No./ Project No.: CS-14-07599

Area:	Facility:	Building:	System ID:
200W	200W Pump & Treat	289TA 6618C	GRW-200WPT-Y10 GRW-200WPT-Y11 GRW-200WPT-Y12 GRW-200WPT-Y17 GRW-200WPT-SCADA ETF-80F

RELEASE

☑ Radiological Record

☐ Work Complete

☐ Not Approved/Archive Only

Design Authority: Print Name	Signature	Date

Change Description and Scope:

The scope of this project is to install a leachate transfer piping system and fiber optic cable to pump leachate derived from the landfill operations from the Hanford Environmental Restoration Disposal Facility (ERDF) to the 2WP&T.

The design uses a portion of the existing ERDF to ETF transfer piping. The new components include installation of new pumps/instrumentation at the ERDF facility, a new portion of transfer piping, and fiber optic cable between ERDF and 2WP&T.

The transfer piping will be blind flanged at the 2WP&T facility. Connection inside with the 2WP&T RAD building system piping and programming of the SCADA system is outside the scope and will be performed by SGW separately.

This FMP/ECR incorporate changes into existing drawings and releases newly generated drawing.

CHPRC ENGINEERING CHANGE REQUEST/FACILITY MODIFICATION PACKAGE (ECR/FMP)

ECR No: ECR-14-000762

ECR/FMP Title: ERDF Leachate Line to 200 West Pump and Treat

2.0 PACKAGE INDEX

Action	Document No.	Sheet No.	Rev. No.	E/S/R	FMP Section Description	FMP Page No.	Release to Work?
RWC	H-2-140324	1	1	S	CIVIL TRANSFER LIN STA 0- 12.06 TO STA 29+00	7/8	Yes
RWC	H-2-827214	1	1	S	CIVIL 6" GROUNDWATER MISC DETAILS	9/10	Yes
RWC	H-2-827217	1	11	E	PIPING P&ID GROUNDWATER TRANSFER, HEAD-END	11/12	Yes
RWC	H-2-827217	2	6	E	PIPING P&ID GROUNDWATER TRANSFER,LERF	13/14	Yes
V	H-2-827217	3	2	E	PIPING P&ID GROUNDWATER TRANSFER, UP1 & ERDF	-	No
RWC	H-2-833526	5	8	S	GENERAL INDEX OF DRAWINGS	15/16	Yes
RWC	H-2-833526	9	5	S	GENERAL INDEX OF DRAWINGS	17/18	Yes
RWC	H-2-833526	21	0	S	GENERAL INDEX OF DRAWINGS	19/20	Yes
RWC	H-2-833534	3	3	E	GENERAL I&C LEGEND SYSTEM ID NUMBERS	21/22	Yes
RWC	SKETCH (H-2-833535 SH 1)	1	9	S	GENERAL PIPING SCHEDULE	23	Yes
RWC	H-2-833540	1	1	S	PFDS RAD BUILDING URANIUM IX SYSTEM	24/25	Yes
RWC	H-2-833541	1	9	S	CONTROL SYSTEM FIBER OPTIC ROUTING PLAN	26/27	Yes
RWC	H-2-833541	3	6	S	CONTROL SYSTEM FIBER OPTIC ROUTING PLAN	28/29	Yes
RWC	H-2-833541	6	2	S	CONTROL SYSTEM FIBER OPTIC ROUTING PLAN	30/31	Yes
RWC	H-2-833541	7	1	S	CONTROL SYSTEM FIBER OPTIC ROUTING PLAN	32/33	Yes
RWC	H-2-833541	10	0	S	CONTROL SYSTEM FIBER OPTIC ROUTING PLAN	34/35	Yes
RWC	H-2-833541	11	1	S	CONTROL SYSTEM FIBER OPTIC ROUTING ENGLARGED PLAN	36/37	Yes
RWC	H-2-833541	12	0	S	CONTROL SYSTEM COMMUNICATION PATH NETWORK	38/39	Yes
RWC	H-2-833542	6	7	S	RAD BUILDING NETWORK DIAGRAM	40/41	Yes
RWC	H-2-833542	7	11	S	WELLS AND BUILDING NETWORK DIAGRAMS	42/43	Yes
RWC	H-2-833543	19	4	S	CONTROL SYSTEM 200W PUMP & TREAT I/O DIAGRAM DPC-YOTA	44/45	Yes
NWC	H-2-833543	31	New (0)	S	CONTROL SYSTEM ERDF LEACHATE I/O DIAGRAM DPC-Y17	46	Yes
I	SKETCH-1 (H-2-833544-1C)				P&IDS RAD BLDG URANIUM SYSTEM INLET TANK	47	Yes
RWC	H-2-833546	5	3	R	CONTROL SYSTEM RAD BUILDING PANEL DPC-YOTA	48/49	Yes
NWC	H-2-833547	1	New (0)	R	CONTROL SYSTEM WIRING DIAGRAM DPC-Y17	50	Yes
NWC	H-2-833547	2	New (0)	R	CONTROL SYSTEM WIRING DIAGRAM DPC-Y17	51	Yes
RWC	H-2-833547	5	0	S	CONTROL SYSTEM WIRING DIAGRAM DPC-YOTA	52/53	Yes
I	SKETCH 2 (H-2-833577-1)				MECHANICAL RAD BLDG OVERALL FLOOR PLAN	54	Yes
RWC	H-2-833579	2	4	S	MECHANICAL RAD BLDG DETAILS	55/56	Yes

CHPRC ENGINEERING CHANGE REQUEST/FACILITY MODIFICATION PACKAGE (ECR/FMP)

ECR No: ECR-14-000762

ECR/FMP Title: ERDF Leachate Line to 200 West Pump and Treat

2.0 PACKAGE INDEX

Action	Document No.	Sheet No.	Rev. No.	E/S/R	FMP Section Description	FMP Page No.	Release to Work?
RWC	H-2-833589	4	12	S	ELECTRICAL RAD BUILDING CONTROL PLAN AREA C	57/58	Yes
RWC	H-2-833599	12	3	E	ELECTRICAL RAD BLDG HEAT TRACE PLAN AREA C	59/60	Yes
RWC	H-2-833599	15	7	S	ELECTRICAL HEAT TRACE PIPING SCHEDULES	61/62	Yes
RWC	H-2-833599	18	1	S	ELECTRICAL HEAT TRACE CABLE SCHEDULE	63/64	Yes
RWC	H-2-833599	19	11	E	ELECTRICAL HEAT TRACE PANELBOARD SCHEDULES	65/66	Yes
RWC	H-2-833610	1	9	R	CIVIL 200W PUMP & TREAT ROAD CROSSING PIPING PLAN	67/68	Yes
RWC	H-2-833610	3	7	R	200W PUMP & TREAT ROAD CROSSING AREA 3	69/70	Yes
RWC	H-2-833610	6	8	R	200W PUMP & TREAT ROAD CROSSING AREA 6	71/72	Yes
NWC	H-2-833900	1	New (0)	S	PFDS ERDF PUMP HOUSE	73	Yes
NWC	H-2-833901	1A	New (0)	E	P&IDS ERDF LEACHATE PUMP HOUSE	74	Yes
NWC	H-2-833901	1B	New (0)	E	P&IDS ERDF LEACHATE PUMP HOUSE	75	Yes
NWC	H-2-833901	1C	New (0)	E	P&IDS ERDF LEACHATE PUMP HOUSE	76	Yes
NWC	H-2-833902	1	New (0)	S	ERDF LEACHATE ELECTRICAL PLANS, ELEVATIONS AND WIRING	77	Yes
NWC	H-2-833903	1	New (0)	S	CIVIL TRANSFER PIPELINE PLAN AND PROFILE	78	Yes
NWC	H-2-833903	2	New (0)	S	CIVIL TRANSFER PIPELINE PLAN AND PROFILE	79	Yes
NWC	H-2-833903	3	New (0)	S	CIVIL TRANSFER PIPELINE DETAILS	80	Yes
NWC	H-2-833903	4	New (0)	S	CIVIL – ERDF LEACHATE TRANSFER PIPELINE PIPE ANCHOR DETAILS	81	Yes
NWC	H-2-833903	5	New (0)	S	CIVIL TRANSFER PIPE LINE DETAILS	82	Yes
NWC	H-2-833903	6	New (0)	S	CIVIL ERDF LEACHATE LINE GRADING PLAN & PROFILES	83	Yes
NWC	H-2-833903	7	New (0)	S	CIVIL ERDF LEACHATE LINE GRADING PLAN & PROFILES	84	Yes
I	0600X-DD-E0012	1	11	R	MCC ONE LINE DIAGRAM - 1	85	Yes
I	0600X-DD-E0014	1	9	R	ELECTRICAL SCHEDULES	86	Yes
I	0600X-DD-E0020	1	6	R	LEACHATE PUMP STATION ELECTRICAL PLANS	87	Yes
I	0600X-DD-M0013	1	4	R	ENVIRONMENTAL RESTORATION DISPOSAL FACILITY CELLS 3 & 4 LEACHATE PUMP STATION PUMP & PIPING MODIFICATIONS	88	Yes
I	H-1-91103	4	1	S	STANDARD PUMP & TREAT CIVIL ROAD CROSSING DETAILS	89	Yes
I	H-1-91103	9	1	S	STANDARD PUMP & TREAT CIVIL SPECIFICATION	90	Yes
I	H-1-91103	10	1	S	STANDARD PUMP & TREAT CIVIL SPECIFICATION	91	Yes

CHPRC ENGINEERING CHANGE REQUEST/FACILITY MODIFICATION PACKAGE (ECR/FMP)

ECR No: ECR-14-000762

ECR/FMP Title: ERDF Leachate Line to 200 West Pump and Treat

2.0 PACKAGE INDEX

Action	Document No.	Sheet No.	Rev. No.	E/S/R	FMP Section Description	FMP Page No.	Release to Work?
I	H-2-833533	3	12	S	GENERAL ELECTRICAL LEGEND	92	Yes
I	H-2-833534	1	5	E	GENERAL I&C LEGEND	93	Yes
I	H-2-833534	2	3	E	GENERAL I&C LEGEND	94	Yes
I	H-2-833735	24	0	R	MECHANICAL PIPE SUPPORT STANDARD DETAILS	95	Yes
I	SKETCH (5142-302)				ENVIRONMENTAL RESTORATION DISPOSAL FACILITY TELEMETRY PANEL ELEMENTARY DIAGRAM	96-99	Yes
I	Other document				CHPRC ENVIRONMENTAL – ACTIVITY SCREENING FORM	100 - 103	No

3.0 DESIGN REQUIREMENTS

Functional Requirements:

See CHPRC-02242 "Functional Design Criteria ERDF Leachate Line to 200 West Pump and Treat"

Design Criteria:

See CHPRC-02242 "Functional Design Criteria ERDF Leachate Line to 200 West Pump and Treat"

Hazard Analysis/Requirements:

Hazards generated by this design have been appropriately remediated. No hazards associated with impacts to the design basis of either the ERDF Leachate system or 200 West Pump and Treat have been identified. No increased hazards to personnel or to the environment have been identified as a result of this modification. Since the facilities are Less Than Hazard Category 3, no formal hazard review of impacts to a Documented Safety Analysis is required.

Piping or piping components may be damaged by over-pressurization or high temperatures, creating hazards associated with leakage of process fluid. Piping and components in this design will comply with and be tested to ASME B31.3, "Process Piping", Category D Fluid Service. This designation is appropriate for the fluid being transported. Maximum developed system pressures of 60 psi for transferring leachate from ERDF to the 200 West Pump and Treat (normal flow path) or to ETF (contingency flow path) are less than the maximum operating pressures for system piping, which are at or above 100 psi. No high energy heat sources exist in the system.

System piping is routed in conditioned structures as well as outside, both above and underground. Existing underground piping is buried to preclude freezing. Manholes are insulated appropriately. Above ground piping is capped with earth, or is heat traced to prevent freezing. Heat trace power is backed up by an emergency power supply for added assurances against freezing. Piping routed under roads is appropriately sleeved for protection.

The design utilizes existing piping between ERDF and the 200 West Pump and Treat Facility. This piping contains air/vacuum relief valves which have leaked on occasion. Corrective maintenance will be required at intervals, and preventive maintenance on the valves is recommended.

Replacement of ERDF's two existing pumps with two new five horsepower pumps does not introduce new electrical hazards beyond those associated with the existing pumps. Additional heat tracing of piping does not introduce a significant hazard.

Other Analysis/Requirements:

N/A

4.0 ACCEPTANCE CRITERIA and METHODS

Acceptance Criteria	Acceptance Method
See SGW-58477, Construction Specification for ERDF Leachate Transfer Line	☒ Inspection ☒ Testing

CHPRC ENGINEERING CHANGE REQUEST/FACILITY MODIFICATION PACKAGE (ECR/FMP)

ECR No: ECR-14-000762

ECR/FMP Title: ERDF Leachate Line to 200 West Pump and Treat

4.0 ACCEPTANCE CRITERIA and METHODS

Acceptance Criteria	Acceptance Method
Hydrostatic and In-Service leak testing with ASME B31.3, Category Fluid D	☐ Inspection ☒ Testing
NEC Inspection	☒ Inspection ☐ Testing
System Functional/ Performance Testing per OTP	☐ Inspection ☒ Testing

5.0 AFFECTED and RELATED ECR/FMPs

Action	ECR/FMP No.	ECR/FMP Title
REL	ECR-14-000513	200W, UP-1 addition well addition
REL	ECR-14-000514	200W, UP-1 addition of IX train for uranium treatment
REL	ECR-12-001461	Initial Release of 200W Pump and Treat Construction Specifications into DMCS
REL	ECR-14-001323	Initial release of specifications and calculations for the ERDF leachate line to 200 West Pump and Treat
REL	ECR-13-000084	Initial Release of 200W Pump and Treat Construction Specifications into DMCS

6.0 OTHER AFFECTED DOCUMENTS

Document Type	Document No.	Rev. No.	Owning Organization	Technical Authority
Operational Procedure	2WPT-PRO-7241		200W P&T	Byron Miller
Operational Procedure	2WPT-PRO-7246		200W P&T	Andrew Esparza
Operational Procedure	2WPT-PRO-7249		200W P&T	Andrew Esparza
Operational Procedure	2WPT-PRO-7244		200W P&T	Justin McCalmant
PM Activity	G2-31306		200W P&T	Justin McCalmant
JCS Component Index			200W P&T	Andrew Esparza
2WP&T Plant Design Process Control Narratives	SGW-52772		200W P&T	Byron Miller
Hazard Analysis	SGW-47266		200W P&T	Mark Carlson
Operational Procedure	ETF POP-80F-001		ETF	Lilly Huth
JCS Component Index			ETF	Lilly Huth
Operational Procedure	WSDO 5-35		WCH	William Borlaug
Operational Procedure	WSDO 5-58		WCH	William Borlaug
Operational Procedure	WCH-87		WCH	William Borlaug
Operational Procedure	WCH-173		WCH	William Borlaug
Operational Procedure	WCH-174		WCH	William Borlaug
Operational Procedure	WCH-179		WCH	William Borlaug
Operational Procedure	WCH-182		WCH	William Borlaug

7.0 DESIGN VERIFICATION

Verification by: ☒ Peer Review ☐ Formal Design Review ☐ Alternate Calculations ☐ Qualification Testing ☐ Not Required

Design Verification Checklist:

a.	Are the Functional Requirements and Design Criteria appropriately selected for the modification?	☒ Yes	☐ No	☐ NA
b.	Does the design meet the specified Functional Requirements and Design Criteria?	☒ Yes	☐ No	☐ NA
c.	Were the design inputs correctly incorporated into the design?	☒ Yes	☐ No	☐ NA
d.	Is the design output reasonable compared to the design inputs?	☒ Yes	☐ No	☐ NA
e.	Have suitable materials, parts, and processes been specified?	☒ Yes	☐ No	☐ NA
f.	Have suitable acceptance, inspection, and testing criteria been specified?	☒ Yes	☐ No	☐ NA
g.	Have constructability, maintenance, and operability been adequately addressed in the design?	☒ Yes	☐ No	☐ NA
h.	Are all affected design documents identifies and appropriately changed?	☒ Yes	☐ No	☐ NA

Additional Design Verification Documentation Prepared? ☐ Yes ☒ No

NOTE: Identify additional Design Verification Documentation in Section 2.0 Package Index.

CHPRC ENGINEERING CHANGE REQUEST/FACILITY MODIFICATION PACKAGE (ECR/FMP)

ECR No: ECR-14-000762

ECR/FMP Title: ERDF Leachate Line to 200 West Pump and Treat

A review of the design has been performed. The selected Functional Requirements and Design Criteria meet the stated Engineering Request. Design Verification performed by the method(s) identified has confirmed that the design documented by this FMP is adequate and meets the stated Functional Requirements and Design Criteria.

W W Rutherford	W W Rutherford	1/22/15
Design Verifier: Print Name	Signature	Date

8.0 REVIEWS

USQ: NA ☒ USQ ☐ GCX No.: NA ☒ Not Required

Greg Bergquist	Greg Bergquist	1/22/15
Reviewer: Print Name	Signature	Date

Environmental: Changes to regulatory doc's required as listed on attached EASF, ☒ Screened Ref: Included in FMP ☐ Not Required

Dave Watson	Approved per telecom Lisa Bernasko	1/22/15
ECO: Print Name	Signature	Date

9.0 APPROVALS and DISTRIBUTION

Approvals

Adam Riffe	Approved per telecom Lisa Bernasko	1/22/15
ECR/FMP Author: Print Name	Signature	Date
Andrew Esparza-System DA		1/22/15
Design Authority: Print Name	Signature	Date
Byron Miller-SCADA DA		1/22/15
Design Authority: Print Name	Signature	Date
Justin McCalmant-Electrical DA		1/22/15
Design Authority: Print Name	Signature	Date
Ron Hollenbeck- Civil/Structural DA	Approved per telecom Lisa Bernasko	1/27/15
Design Authority: Print Name	Signature	Date
Lilly Huth- ETF		1/22/15
Design Authority: Print Name	Signature	Date
Bill Borlaug- WCH	W.A. Borlaug	1/22/2015
Design Authority: Print Name	Signature	Date
Sam Camp	Samuel L. Camp	1/27/2015
Technical Authority: Print Name	Signature	Date
Greg Bergquist	Greg Bergquist	1/28/15
Engineering Manager: Print Name	Signature	Date
Steve Burke	Steven P Burke	1/22/15
Operations Manager: Print Name	Signature	Date
John Stamper		1/22/15
Rad Con: Print Name	Signature	Date

Distribution

HID	Name	HID	Name
3655142	Andrew Esparza	0006308	Lilly Huth
7804727	Byron Miller	3932535	Bill Borlaug
6149221	Justin McCalmant	0044833	Sam Camp
0004025	Ron Hollenbeck	0099201	Greg Bergquist
0016820	Steve Burke	0094899	John Stamper
0025021	Kirt Bare	0093000	Wally Rutherford
0055557	Dave Watson	0044554	Rich Oldham

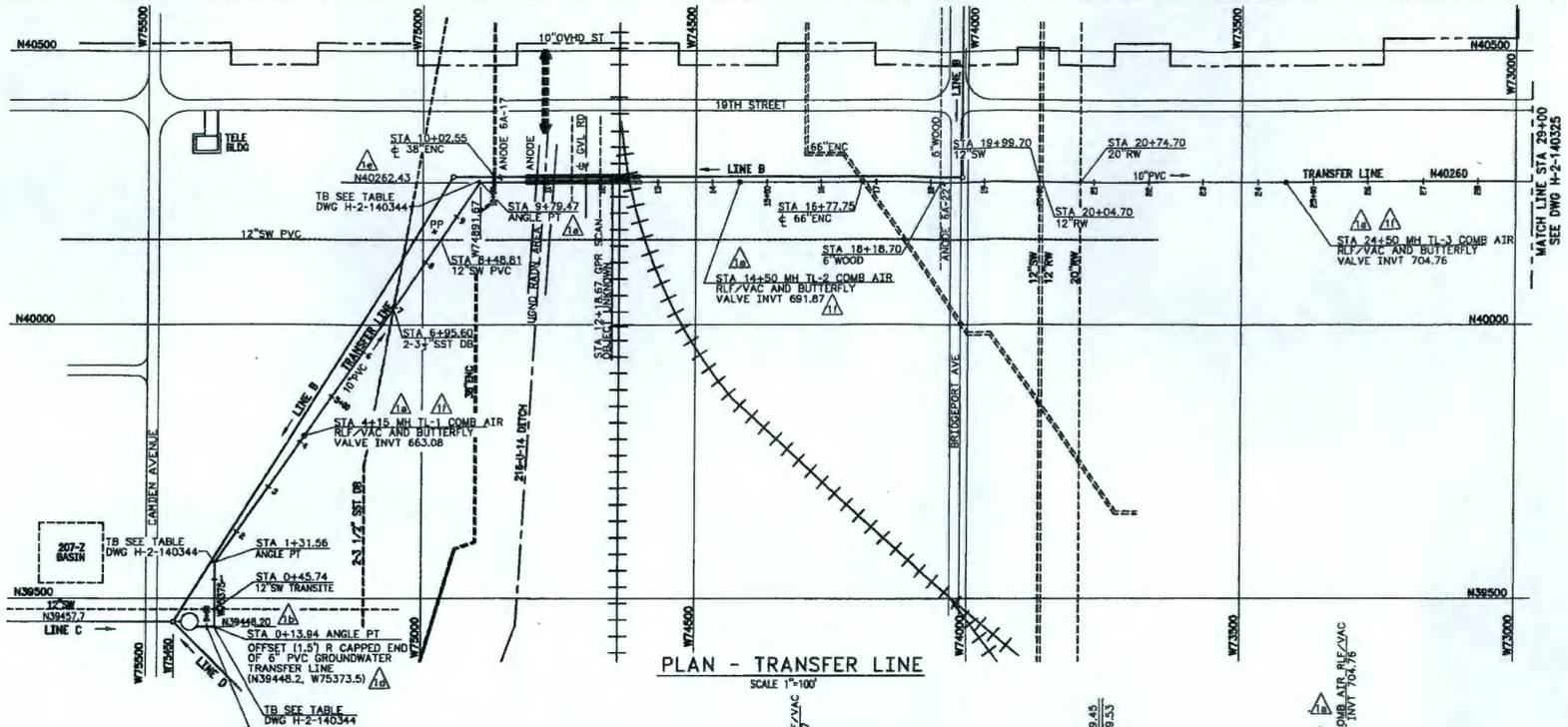

PLAN - TRANSFER LINE

SCALE 1"=100'

VALVE TABLE			
MANHOLE	BUTTERFLY VALVE NO	AIR RLF/VAC VALVE NO	GATE VALVE NO
TL-1	68T-BV-01	68T-VBAR-01	68T-GV-01
TL-2	68T-BV-02	68T-VBAR-02	68T-GV-02
TL-3	68T-BV-03	68T-VBAR-03	68T-GV-03

NOTES

1- FOR GENERAL NOTES & LEGEND SEE DWG H-2-140321
2- TRANSFER LINE MATERIAL SHALL BE IAW PIPE CODE P-1 OF SECTION 02650 OF THE SPECIFICATION
3- CONSTRUCTION TOLERANCES FOR PLACING PIPE
HORIZONTAL ± 0.50'
VERTICAL ± 0.20'

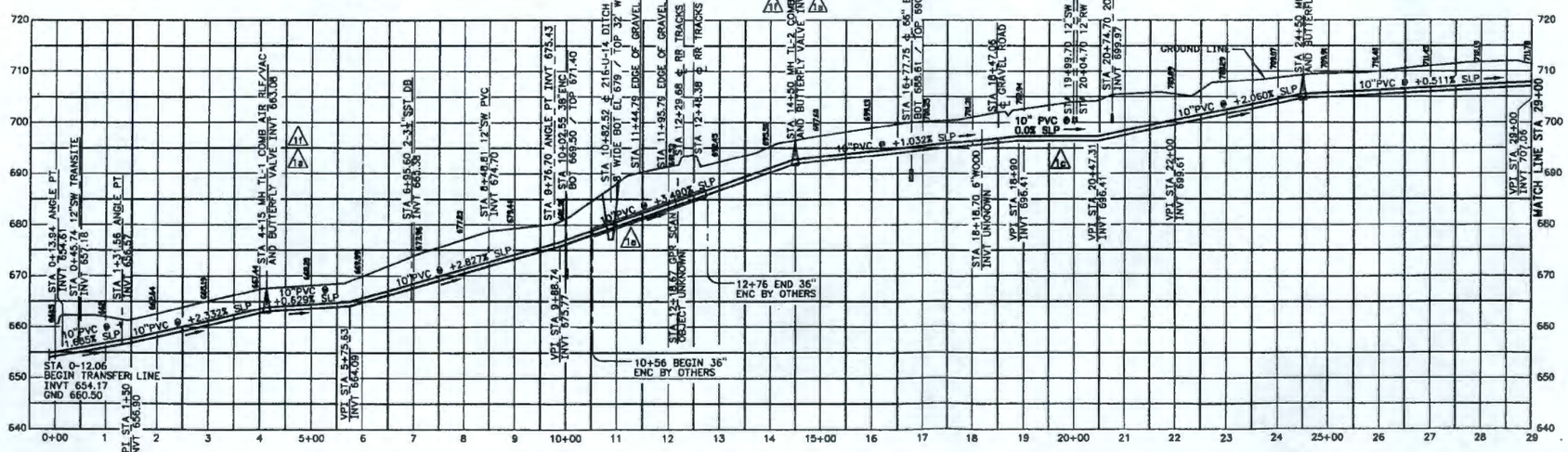

PROFILE - TRANSFER LINE

SCALE VERTICAL 1"=10'
HORIZONTAL 1"=100'

ECR-14-000762 Page 7
"WAS CONDITION"

H-2-140320	DRAWING LIST / AREA MAP		
B140324A	2J1BM-ACD2120-NN		

U.S. DEPARTMENT OF ENERGY
RICHLAND FIELD OFFICE
KAISER ENGINEERS HANFORD COMPANY
CIVIL
TRANSFER LINE
STA 0-12.06 TO STA 29+00
W-049H, 200 AREA TEDF COLLECTION SYSTEM
H-2-140324

PLOT SCALE: 1=100 | KEHCAD

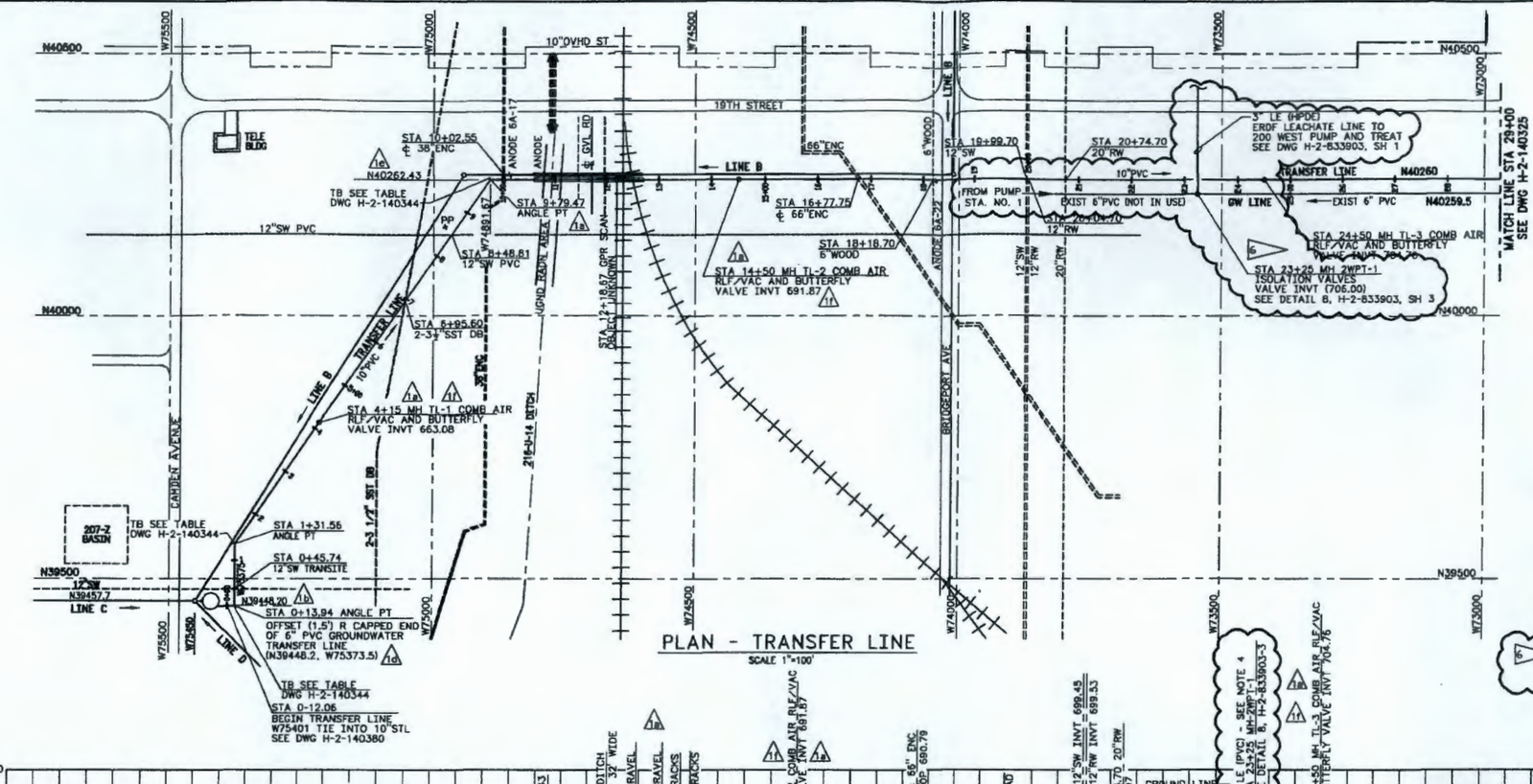

PLAN - TRANSFER LINE

SCALE 1"=100'

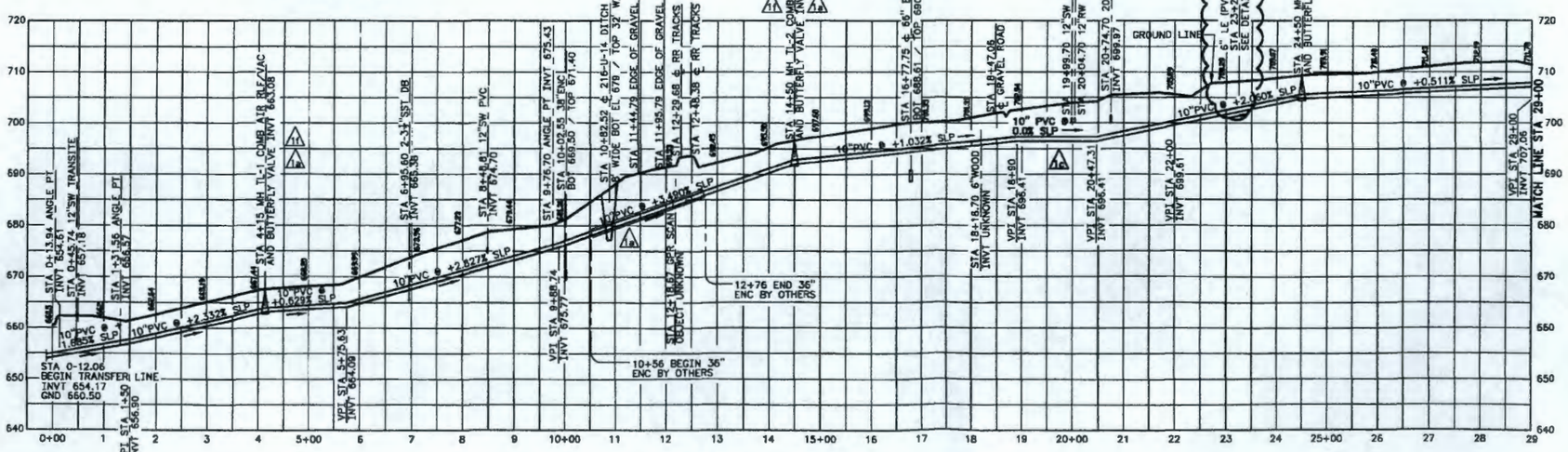

PROFILE - TRANSFER LINE

SCALE VERTICAL 1"=10' HORIZONTAL 1"=100'

VALVE TABLE

MANHOLE	BUTTERFLY VALVE NO	AIR RLF/VAC VALVE NO	VENT ISO VALVE NO
TL-1	68T-BV-01	68T-VBAR-01	68T-GV-01
TL-2	68T-BV-02	68T-VBAR-02	68T-GV-02
TL-3	68T-BV-03	68T-VBAR-03	68T-GV-03

GROUNDWATER LINE VALVE TABLE

MANHOLE	BUTTERFLY VALVE NO	AIR RLF/VAC VALVE NO	VENT ISO VALVE NO
GW-1	80F-047	80F-201	80F-074
GW-2	80F-048	80F-202	80F-075
GW-3	80F-049	80F-203	80F-076
2WPT-1	80F-043*	-	-
2WPT-1	V05-Y17*	-	-

* BALL VALVE

NOTES

1- FOR GENERAL NOTES & LEGEND SEE DWG H-2-140321
2- TRANSFER LINE MATERIAL SHALL BE IAW PIPE CODE P-1 OF SECTION 02650 OF THE SPECIFICATION
3- CONSTRUCTION TOLERANCES FOR PLACING PIPE
HORIZONTAL ± 0.50'
VERTICAL ± 0.20'
4- A 6" PVC GROUNDWATER TRANSFER LINE PARALLELS THE TRANSFER LINE LYING APPROX 1.5 FT ON THE SOUTHERLY SIDE OF AND AT SAME DEPTH AS THE TRANSFER LINE FROM STA 0+14 (H-2-140324 SH 1) TO STA 8+07 (H-2-140368 SH 1).
5- POSITION OF GROUNDWATER LINE IS NOT SHOWN. MANHOLE IS ADJACENT TO CORRESPONDING TRANSFER LINE MANHOLE.

6 EXPLORATORY EXCAVATION SHALL BE PERFORMED PRIOR TO CONSTRUCTION TO DETERMINE ACTUAL PIPE LOCATION AND ELEVATION.

DRAWING LIST / AREA MAP	H-2-140320

AS-BUILT PER ENG-W-049H-B-C-E5-D03 3-P1-2
ECN W-049H-130 2 CS2.6;
ECN W-049H-148 2 C2 C4
ECN W-049H-195 2 D6.4
ECN W-049H-82 2 B04
ECN W-049H-14 2 B7
B2.3 B.C6.6 D03 C5 BC7 E3.6
ECN W-049H-1 2 E3.6

RC CROCKETT; DA LISLE; JD MURPHY; JD ARCHIBALD; JD AXFORD; BR TILLSON; DA LISLE

U.S. DEPARTMENT OF ENERGY
RICHLAND FIELD OFFICE
KAISER ENGINEERS HANFORD COMPANY
CIVIL
TRANSFER LINE
STA 0-12.06 TO STA 29+00
200-W 200 AREA TEDF COLLECTION SYSTEM
H-2-140324

BY 40344A; 2-IBM-AC02-14.0-MN; 2-2-93; SHOWN; DR97Z2; PLOT SCALE: 1=100; KEHCAD

ECR-14-000762 Page 8

THIS PAGE INCPORPORATES ECN-636788, ECN-622305, HNF-FMP-07-34847-R0, ECR-10-001673 AND ECR-14-000419.

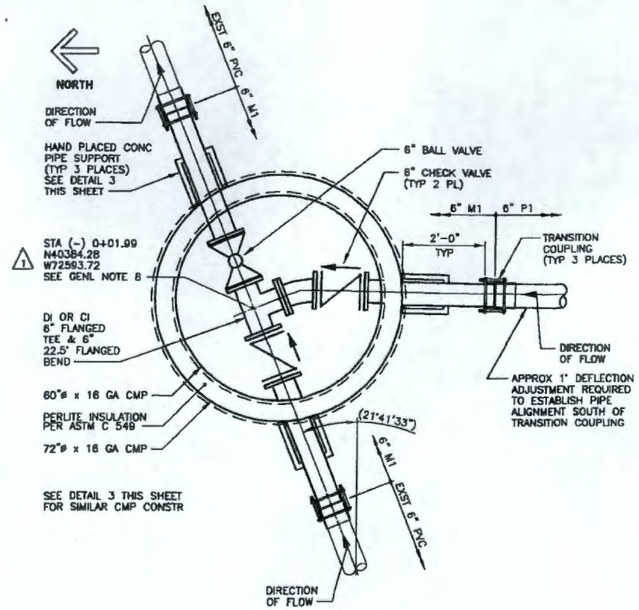

1 DETAIL
H-2-827212, SH 1
SCALE: 3/4" = 1'-0"

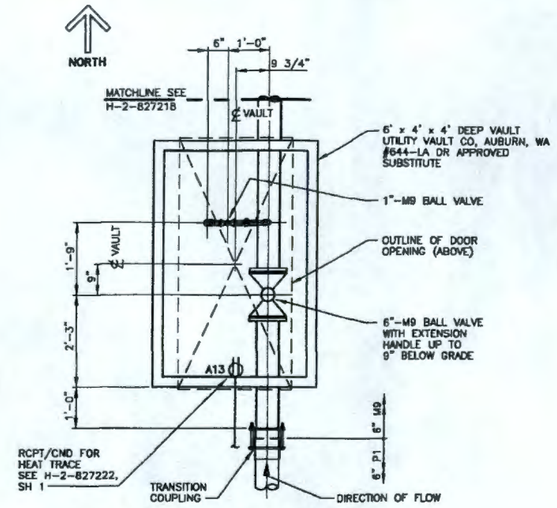

PLAN-DRAIN VALVE VAULT

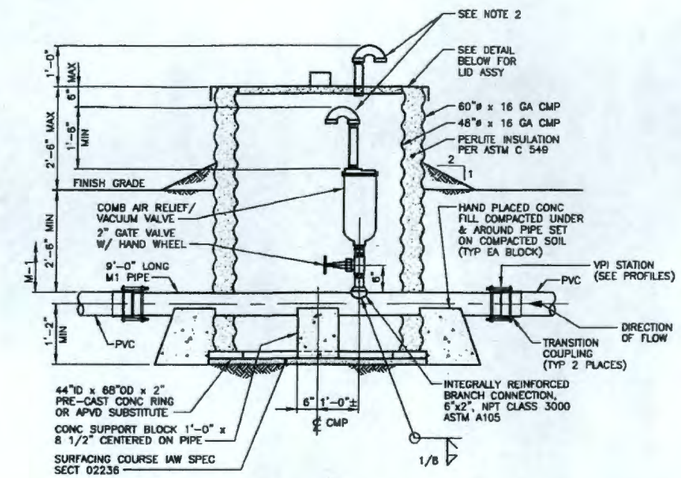

ELEVATION

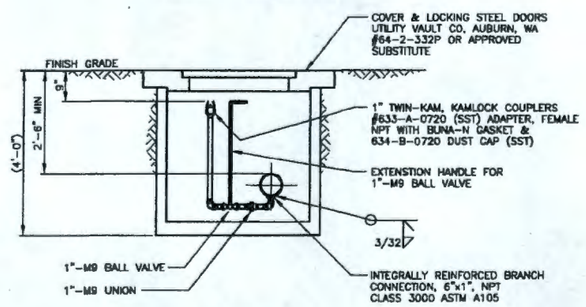

ELEVATION

NOTE: HEAT TRACE & INSULATION NOT SHOWN FOR CLARITY SEE NOTE 3

2 DETAIL
H-2-827213
SCALE: 3/4" = 1'-0"

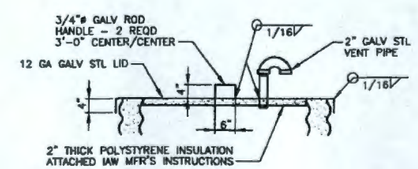

LID ASSEMBLY

3 DETAIL
H-2-827212, SH 1 & H-2-827213
SCALE: 3/4" = 1'-0"

NOTES

1- FOR GENERAL NOTES SEE H-2-827211.

2- CAP PIPE END WITH INSECT SCREENING SIMILAR TO MCMASTER-CARR CAT #100, ITEM NO 1023A31. HOSE CLAMP SCREENING ONTO END OF PIPE.

3- SPIRAL WRAP HEAT TRACE CABLE AROUND PIPING INSIDE OF THE DRAIN VALVE VAULT. CONTINUE HEAT TRACE THROUGH THE VAULT TO ABOVE GRADE PIPING SHOWN ON H-2-827218. PLACE PIPE INSULATION OVER HEAT TRACE CABLE.

DWG NO	TITLE	REF NUMBER	TITLE
	DRAWING TRACEABILITY LIST	NEXT USED ON H-2-827212 & H-2-827213	REFERENCES

REV	DATE	REVISIONS	BY	CHK	APVD
1	10-10-96	E29260-005: ZR, RB DIRECT REVISION PER RCN			

CAD FILE: B827214A REVISIONS CADCODE: WHSS ACCT:120-58

DRAWN BY	J.K. THRASHER
DESIGNED BY	D.S. MESSINGER
CHECKED BY	S.C. MURPHY
SUPERVISED BY	N/A
PROJ ENGR	R.G. HOLLENBECK
PROJ MGR	N/A
CONSTR ENGR	D.S. MESSINGER
CONSTR MGR	N/A
CONSTR	D.S. MESSINGER
QA	N/A
SAFETY	R.H. SHI
CUSTOMER SERVICE	G. PAPE
	A.J. SULLIVAN

CONSTRUCTION
SAFETY CLASS SAFETY SIGNIFICANT/SCS REV NO. 6 DATE 10-10-96

U.S. DEPARTMENT OF ENERGY
Richland Operations Office
FLUOR DANIEL NORTHWEST, INC.

M CIVIL
6" GROUNDWATER
MISC. DETAILS

WO E42280 GROUNDWATER PIPELINE TIE-INS
SCALE 1 = 1 DWG H-2-827214 SHEET 1 OF 1
SHOWN IN SI/ENG

GTITLE.DWG (1/96)
KEH 2297.00

PLOT SCALE: 1=1

ECR-14-000762 Page 9
"WAS CONDITION"

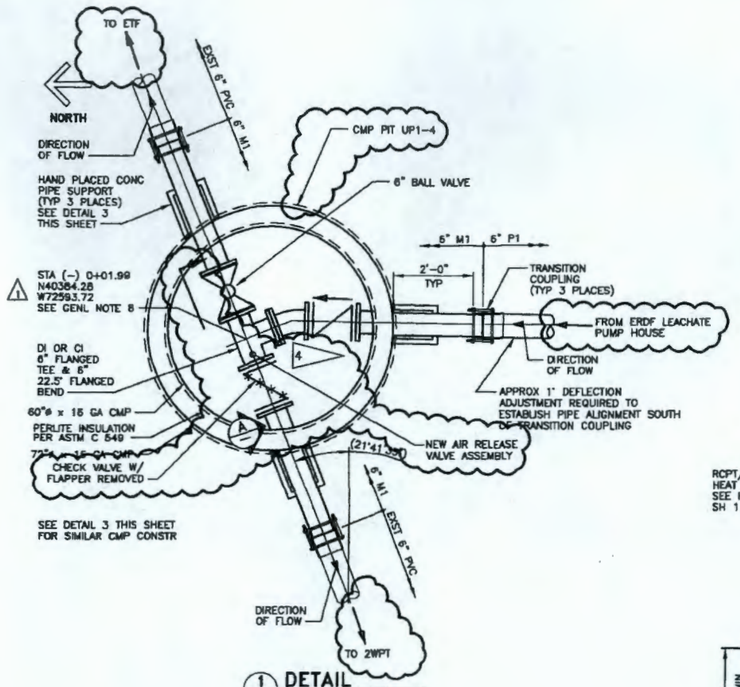

1 DETAIL
H-2-827212, SH 1
SCALE: 3/4" = 1'-0"

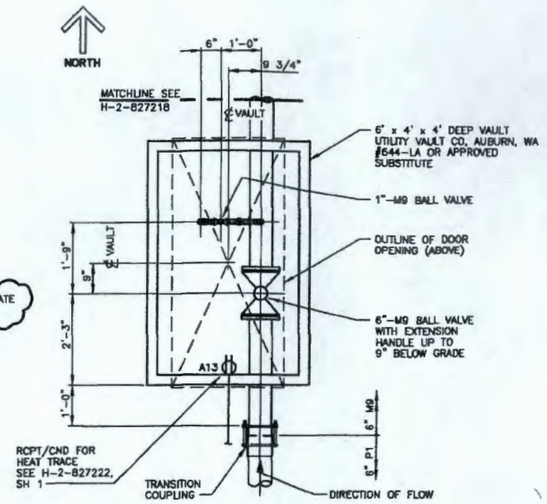

PLAN-DRAIN VALVE VAULT

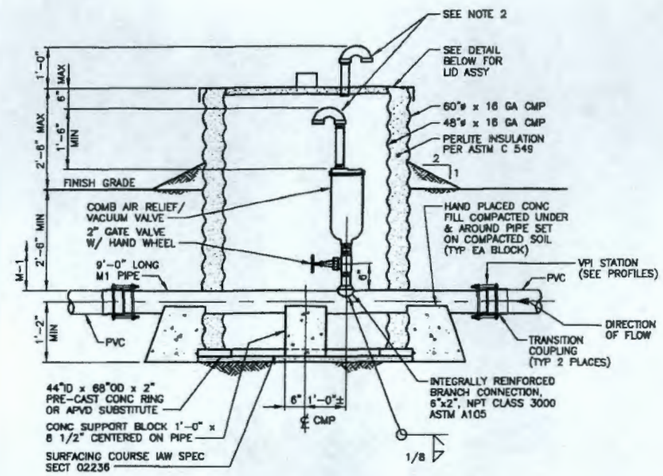

ELEVATION

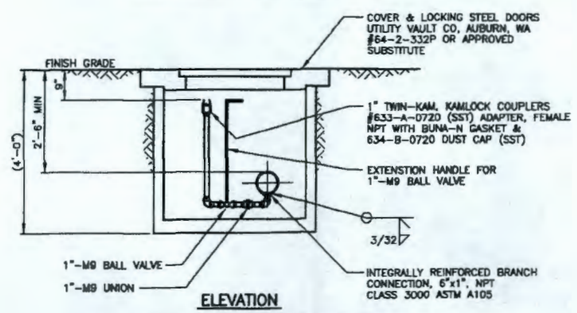

ELEVATION

NOTE: HEAT TRACE & INSULATION NOT SHOWN FOR CLARITY SEE NOTE 3

2 DETAIL
H-2-827213
SCALE: 3/4" = 1'-0"

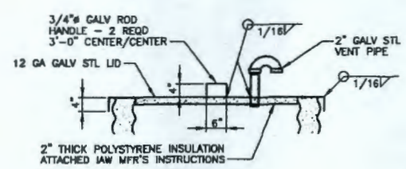

LID ASSEMBLY

3 DETAIL
H-2-827212, SH 1 & H-2-827213
SCALE: 3/4" = 1'-0"

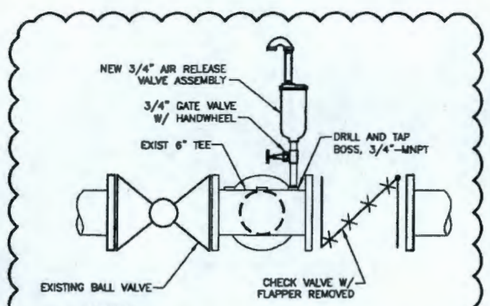

NOTES:

- AIR VALVE ASSEMBLY SIMILAR TO DETAIL 3 EXCEPT FOR PIPE SIZE AND AIR RELEASE ONLY.
- VALVES PER SPECIFICATION SGW-58477 SECTION 40 27 02.

A SECTION
SCALE: NONE

NOTES

1- FOR GENERAL NOTES SEE H-2-827211.

2- CAP PIPE END WITH INSECT SCREENING SIMILAR TO MCMASTER-CARR CAT #100, ITEM NO 1023A31. HOSE CLAMP SCREENING ONTO END OF PIPE.

3- SPIRAL WRAP HEAT TRACE CABLE AROUND PIPING INSIDE OF THE DRAIN VALVE VAULT. CONTINUE HEAT TRACE THROUGH THE VAULT TO ABOVE GRADE PIPING SHOWN ON H-2-827218. PLACE PIPE INSULATION OVER HEAT TRACE CABLE.

4 CLOSE BALL VALVE. REMOVE CHECK VALVE FLAPPER TO ALLOW FLOW TO SOUTHEAST. INSTALL NEW GASKET WHEN REPLACING THE CHECK VALVE TOP FLANGE. DRILL AND TAP AT BOSS FOR CONNECTION OF AIR RELEASE VALVE. SEE SECTION A FOR REVISED CONFIGURATION.

DWG NO	TITLE	REF NUMBER	TITLE
	DRAWING TRACEABILITY LIST	NEXT USED ON H-2-827212 & H-2-827213	REFERENCES

REVISIONS			
1	E28280 DOE; IN SB DIRECT REVISION PER ECN		

CADFILE B827214A CADCODE WINBS:KCD7120-SB

CONSTRUCTION
6 10/10/96
U.S. DEPARTMENT OF ENERGY
RICHLAND OPERATIONS OFFICE
BROOK DANIEL NORTHWEST, INC.
CIVIL
6" GROUNDWATER MISC DETAILS
WO E28280, GROUNDWATER PIPELINE TIE-INS
H-2-827214 11
SHOWN 61280

TITLE.DWG (1/96)

ECR-14-000762 Page 10

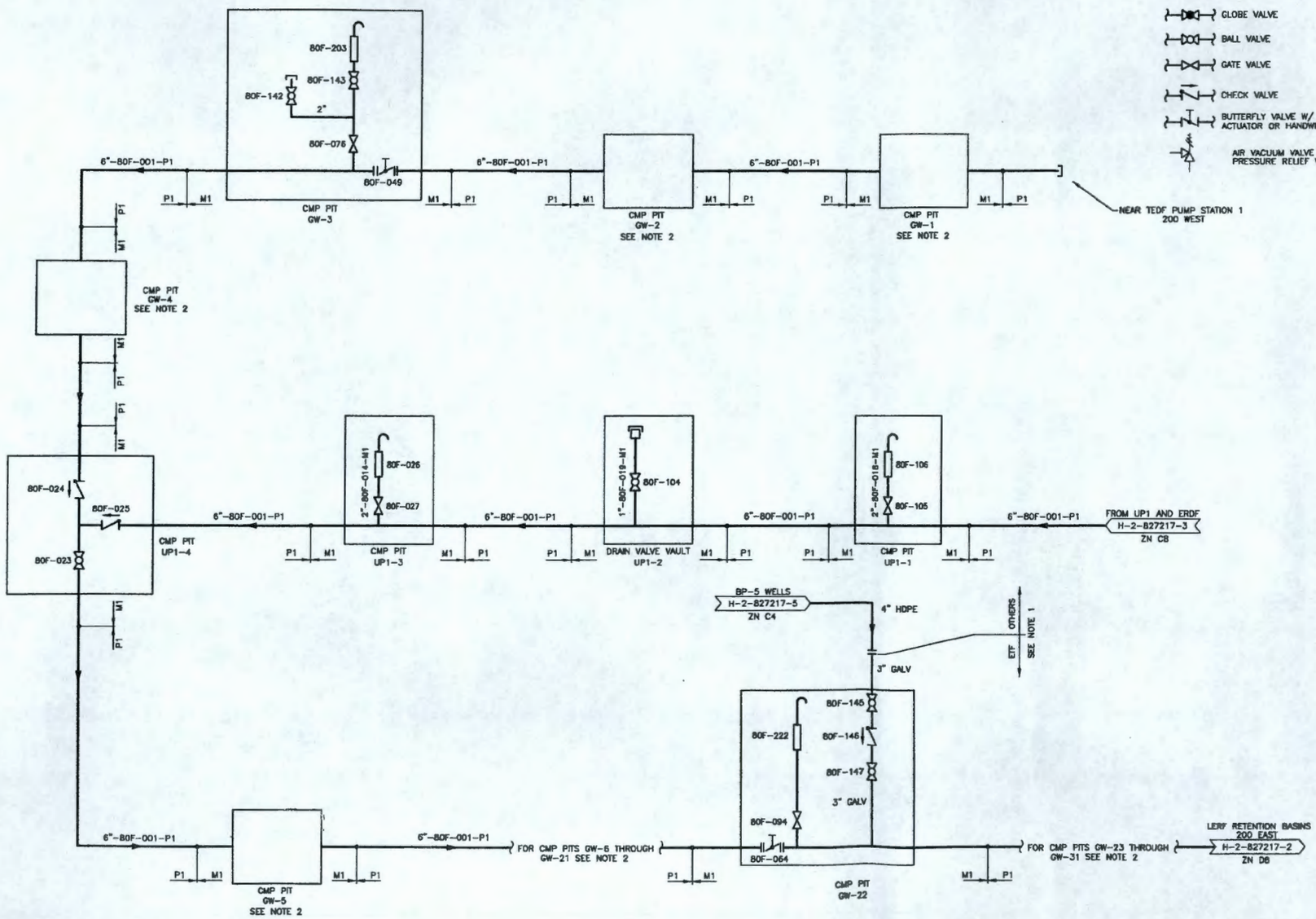

SYMBOL LEGEND

LINES:

- PIPING (MAIN PROCESS STREAM), INSTRUMENTATION, OR EQUIPMENT
- ELECTRICAL POWER OR SIGNAL

VALVES:

- GLOBE VALVE
- BALL VALVE
- GATE VALVE
- CHECK VALVE
- BUTTERFLY VALVE W/ HAND ACTUATOR OR HANDWHEEL
- AIR VACUUM VALVE OR PRESSURE RELIEF VALVE

MISCELLANEOUS

- REDUCER
- KAMLOK COUPLERS
- COUPLING
- SAMPLE PORT WITH PLUG
- FLOW METER
- COMBINATION AIR RELIEF/ VACUUM VALVE
- SUBMERSIBLE PUMP
- AIR SUPPLY CONNECTION

INSTRUMENTATION SYMBOLS:

FIT	FLOW INDICATING TRANSMITTER	FI	FLOW INDICATOR
FQI	FLOW TOTALIZER	FQIT	FLOW TOTALIZER TRANSMITTER
LSL	LEVEL SWITCH LOW	PI	PRESSURE INDICATOR
PSH	PRESSURE SWITCH HIGH	FE	FLOW ELEMENT
YL	INDICATING LIGHT	HS	HAND SWITCH
◇	WORCHESTER CONTROL BOX TJB-C	PLH	PRESSURE LAMP HIGH
LAL	LEVEL ALARM LOW	LT	LEVEL TRANSMITTER
PAH	PRESSURE ALARM HIGH	PIT	PRESSURE INDICATING TRANSMITTER

ABBREVIATIONS

CMP CORRUGATED METAL PIPE

PIPING IDENTIFICATION LEGEND:

6"-80F-001-M9

- PIPE MATERIAL CODE
- SEQUENTIAL NUMBER
- SYSTEM NUMBER
- LINE SIZE

NOTES:

1. ETF WILL NOT MAINTAIN THE DESIGN CONFIGURATION OF THE PORTION UNDER OTHERS CUSTODY.
2. SEE SHEET 2 FOR GW TRANSFER LINE CMP PIT VALVE NUMBERS AND DIAGRAMS TABLE.

ECR-14-000762 Page 11
"WAS CONDITION"

DWG NO	TITLE
H-2-827211	DRAWING LIST
REF NUMBER	TITLE
NEXT USED ON H-2-827211	REFERENCES

DRAWING TRACEABILITY LIST

REVISIONS: 2 REVISED PER ECR-14-000414

CONSTRUCTION — SAFETY SIGNIFICANT/SC3 — 11 — 10-10-96

U.S. DEPARTMENT OF ENERGY
FLUOR DANIEL NORTHWEST, INC.
PIPING P & ID
GROUNDWATER TRANSFER, HEAD-END
PROJ NO 22879 GROUNDWATER PIPELINE REPAIRS
H-2-827217 SHT 1

GTITLE.DWG (1/96)

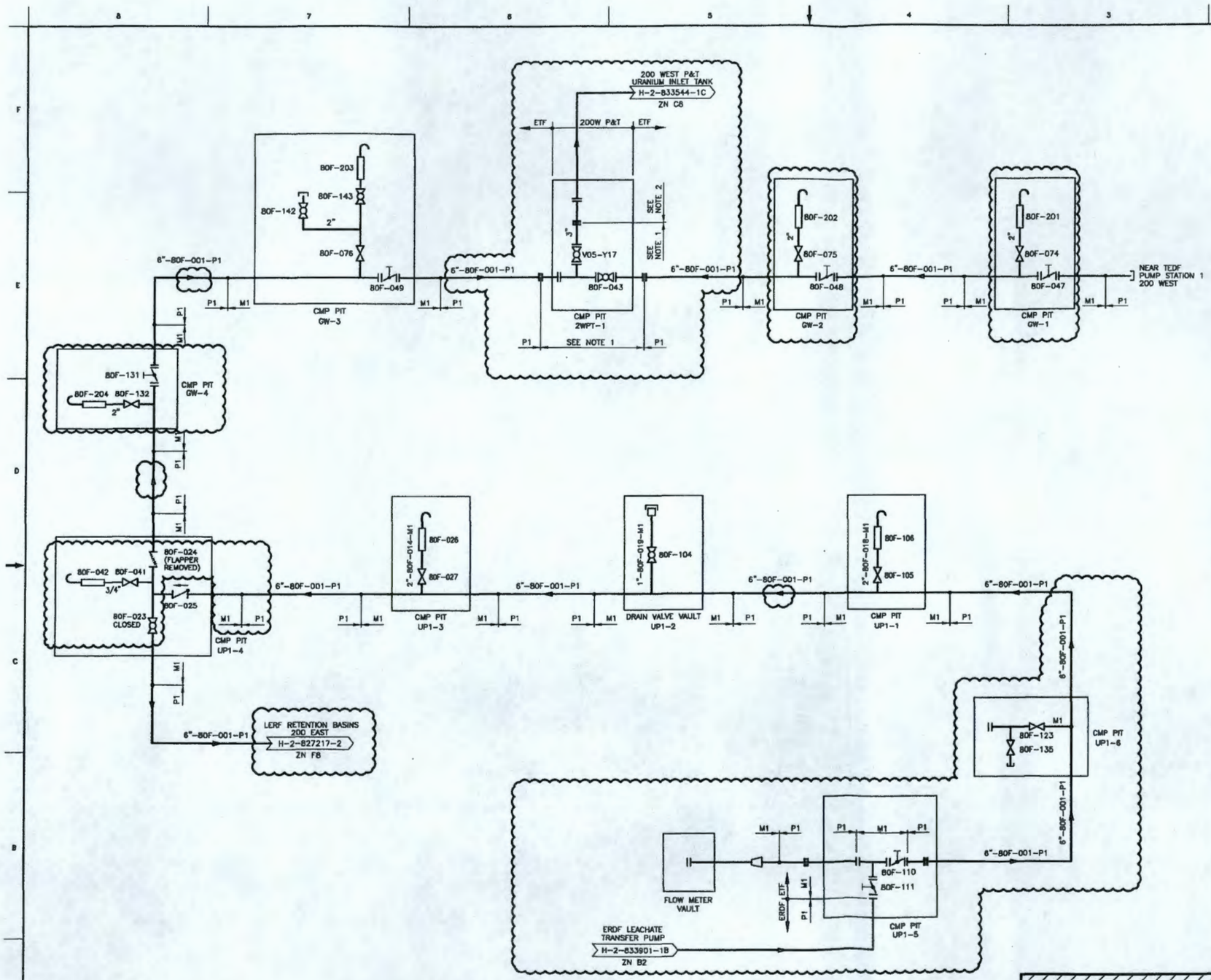

SYMBOL LEGEND

LINES:

- PIPING (MAIN PROCESS STREAM), INSTRUMENT, OR EQUIPMENT
- ELECTRICAL POWER OR SIGNAL

VALVES:

- GLOBE VALVE
- BALL VALVE
- GATE VALVE
- CHECK VALVE
- BUTTERFLY VALVE W/ HAND ACTUATOR OR HANDWHEEL
- AIR VACUUM VALVE OR PRESSURE RELIEF VALVE

MISCELLANEOUS

- REDUCER
- KAMLOK COUPLERS
- COUPLING
- SAMPLE PORT WITH PLUG
- FLOW METER
- COMBINATION AIR RELIEF/ VACUUM VALVE
- SUBMERSIBLE PUMP
- AIR SUPPLY CONNECTION

INSTRUMENTATION SYMBOLS:

FIT	FLOW INDICATING TRANSMITTER	FI	FLOW INDICATOR
FQI	FLOW TOTALIZER	FQIT	FLOW TOTALIZER TRANSMITTER
LSL	LEVEL SWITCH LOW	PI	PRESSURE INDICATOR
PSH	PRESSURE SWITCH HIGH	FE	FLOW ELEMENT
YL	INDICATING LIGHT	HS	HAND SWITCH
	WORCHESTER CONTROL BOX TJB-C	PLH	PRESSURE LAMP HIGH
LAL	LEVEL ALARM LOW	LT	LEVEL TRANSMITTER
PAH	PRESSURE ALARM HIGH	PIT	PRESSURE INDICATING TRANSMITTER

ABBREVIATIONS

CMP CORRUGATED METAL PIPE

PIPING IDENTIFICATION LEGEND:

6"-80F-001-M9

- PIPE MATERIAL CODE
- SEQUENTIAL NUMBER
- SYSTEM NUMBER
- LINE SIZE

NOTES:

1. DUCTILE IRON PIPE PER SPECIFICATION SGW-58477 SECTION 40 27 00.01.
2. HDPE PIPE PER SPECIFICATION SGW-58477 SECTION 33 05 01.10.

DWG NO	TITLE
H-2-827211	DRAWING LIST
REF NUMBER	TITLE
	REFERENCES
NEXT USED ON H-2-827211	

DRAWING TRACEABILITY LIST

REVISIONS: 11 REVISED PER ECR-14-000419 (REM 5/14, CHPRC, RPSH)

SAFETY SIGNIFICANT (SC) — CONSTRUCTION — 11 — 10-10-96

U.S. DEPARTMENT OF ENERGY
Richland Operations Office
FLUOR DANIEL NORTHWEST, INC.

PIPING P & ID
GROUNDWATER TRANSFER, HEAD-END

W.O. E29280 GROUNDWATER PIPELINE NE-INS

200W 7004 H-2-827217 11

NONE 512860 1

PLOT SCALE: 1=1 — PLOTTED — GTITLE.DWG (1/96) KEH 2297.00

ECR-14-000762 Page 12

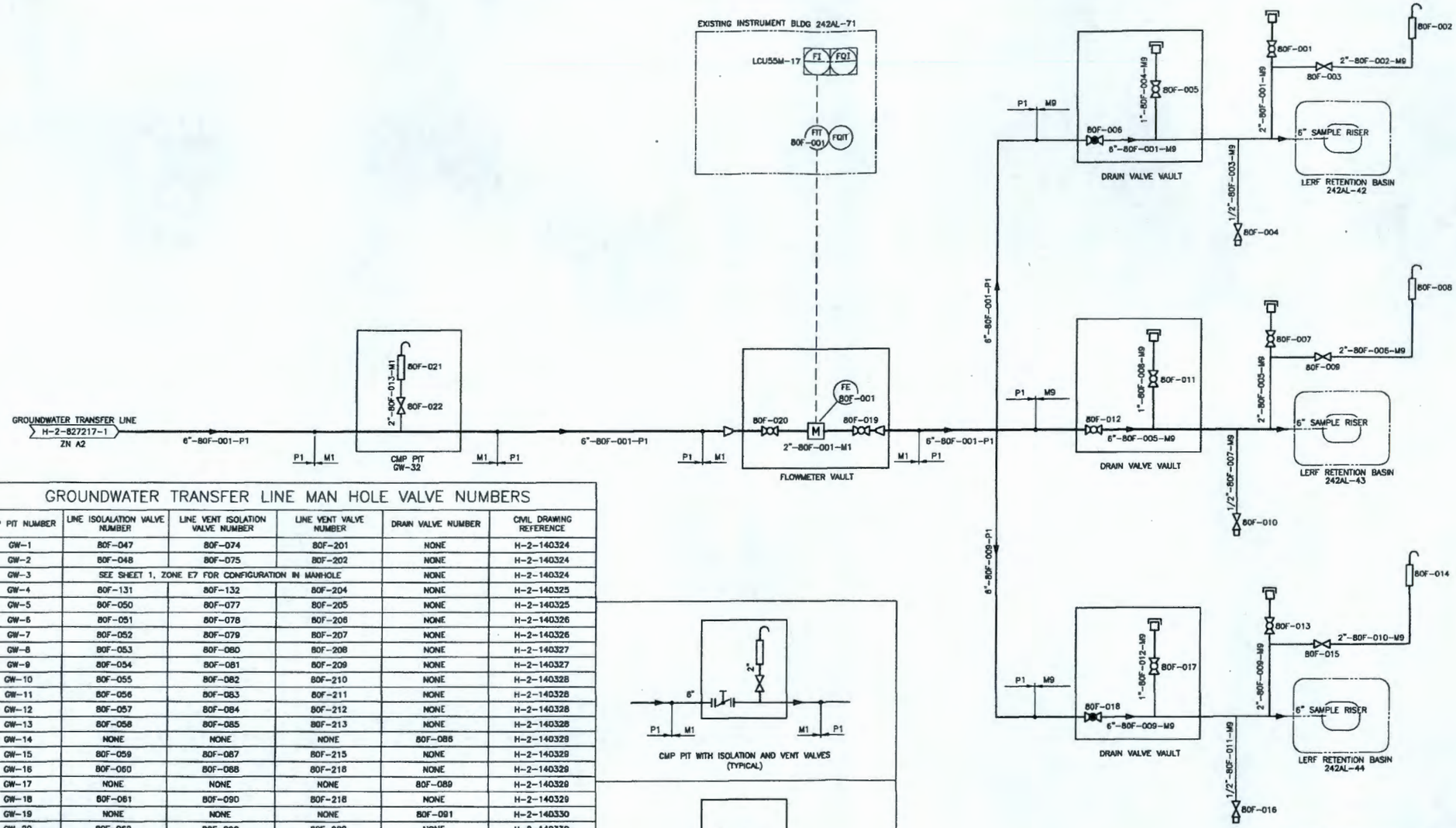

FOR SYMBOL LEGEND AND NOTES SEE SHEET 1

GROUNDWATER TRANSFER LINE MAN HOLE VALVE NUMBERS

CMP PIT NUMBER	LINE ISOLALATION VALVE NUMBER	LINE VENT ISOLATION VALVE NUMBER	LINE VENT VALVE NUMBER	DRAIN VALVE NUMBER	CIVIL DRAWING REFERENCE
GW-1	80F-047	80F-074	80F-201	NONE	H-2-140324
GW-2	80F-048	80F-075	80F-202	NONE	H-2-140324
GW-3	SEE SHEET 1, ZONE E7 FOR CONFIGURATION IN MANHOLE			NONE	H-2-140324
GW-4	80F-131	80F-132	80F-204	NONE	H-2-140325
GW-5	80F-050	80F-077	80F-205	NONE	H-2-140325
GW-6	80F-051	80F-078	80F-206	NONE	H-2-140326
GW-7	80F-052	80F-079	80F-207	NONE	H-2-140326
GW-8	80F-053	80F-080	80F-208	NONE	H-2-140327
GW-9	80F-054	80F-081	80F-209	NONE	H-2-140327
GW-10	80F-055	80F-082	80F-210	NONE	H-2-140328
GW-11	80F-056	80F-083	80F-211	NONE	H-2-140328
GW-12	80F-057	80F-084	80F-212	NONE	H-2-140328
GW-13	80F-058	80F-085	80F-213	NONE	H-2-140328
GW-14	NONE	NONE	NONE	80F-086	H-2-140329
GW-15	80F-059	80F-087	80F-215	NONE	H-2-140329
GW-16	80F-060	80F-088	80F-216	NONE	H-2-140329
GW-17	NONE	NONE	NONE	80F-089	H-2-140329
GW-18	80F-061	80F-090	80F-218	NONE	H-2-140329
GW-19	NONE	NONE	NONE	80F-091	H-2-140330
GW-20	80F-062	80F-092	80F-220	NONE	H-2-140330
GW-21	80F-063	80F-093	80F-221	NONE	H-2-140330
GW-22	SEE SHEET 1, ZONE B4 FOR CONFIGURATION IN MANHOLE			NONE	H-2-140331
GW-23	80F-065	80F-095	80F-223	NONE	H-2-140331
GW-24	80F-066	80F-096	80F-224	NONE	H-2-140331
GW-25	80F-067	80F-097	80F-225	NONE	H-2-140332
GW-26	80F-068	80F-098	80F-226	NONE	H-2-140332
GW-27	80F-069	80F-099	80F-227	NONE	H-2-140332
GW-28	80F-070	80F-100	80F-228	NONE	H-2-140333
GW-29	NONE	NONE	NONE	80F-101	H-2-140333
GW-30	80F-071	80F-102	80F-230	NONE	H-2-140333
GW-31	80F-072	80F-103	80F-231	NONE	H-2-140333
GW-32	NONE	80F-022	80F-232	NONE	H-2-140368
UP1-1	SEE H-2-827217 SHEET 1 FOR VALVE CONFIGURATION				H-2-827212-2
UP1-2	SEE H-2-827217 SHEET 1 FOR VALVE CONFIGURATION				H-2-827212-2
UP1-3	SEE H-2-827217 SHEET 1 FOR VALVE CONFIGURATION				H-2-827212-1
UP1-4	SEE H-2-827217 SHEET 1 FOR VALVE CONFIGURATION				H-2-827212-1
UP1-5	SEE H-2-827217 SHEET 3 FOR VALVE CONFIGURATION				H-2-827212-2
UP1-6	SEE H-2-827217 SHEET 3 FOR VALVE CONFIGURATION				H-2-827212-2

CMP PIT WITH ISOLATION AND VENT VALVES (TYPICAL)

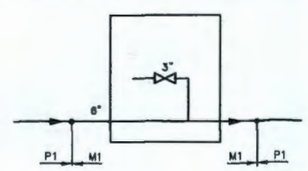

CMP PIT WITH DRAIN VALVE (TYPICAL)

DWG NO	TITLE	REF NUMBER	TITLE
	DRAWING TRACEABILITY LIST	NEXT USED ON	REFERENCES

REVISIONS

B — INCORPORATED EDR-70-001873, EC9-13-000354 — KDJ 4/13

KD JUNY — N/A — N/A — RPSH

CONSTRUCTION — 11/10-10-96

U.S. DEPARTMENT OF ENERGY
Richland Operations Office
FLUOR DANIEL NORTHWEST, INC.

PIPING P & ID
GROUNDWATER TRANSFER, LERF

NO. 139280, GROUNDWATER PIPELINE TIE-INS

242AL 7004 H-2-827217 B

NONE 512269 2

PLOTTED GTITLE.DWG (1/96) KEH 2297.00

2 PLOT SCALE: 1=1

ECR-14-000762 Page 13
"WAS CONDITION"

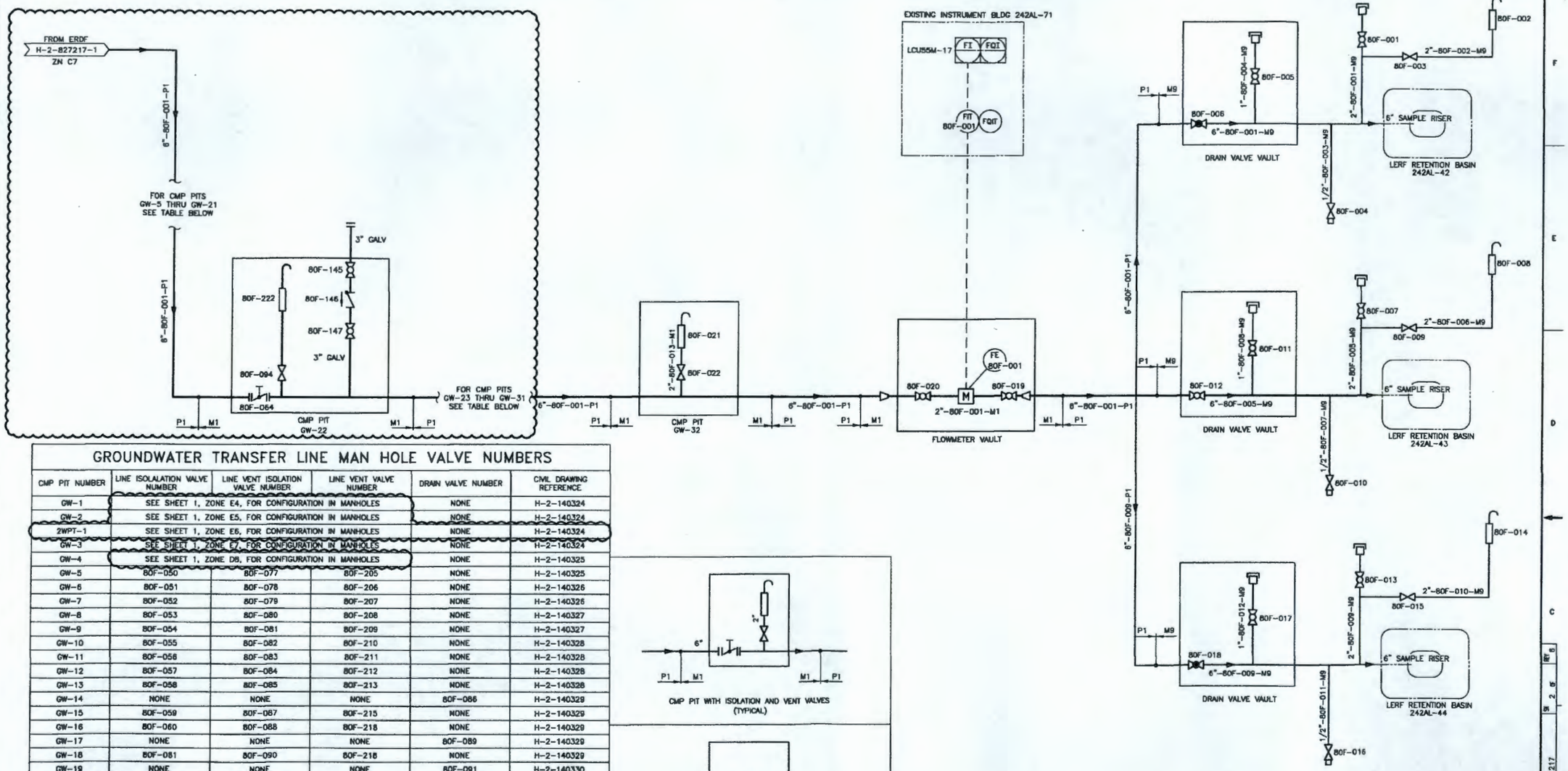

GROUNDWATER TRANSFER LINE MAN HOLE VALVE NUMBERS

CMP PIT NUMBER	LINE ISOLALATION VALVE NUMBER	LINE VENT ISOLATION VALVE NUMBER	LINE VENT VALVE NUMBER	DRAIN VALVE NUMBER	CIVIL DRAWING REFERENCE
GW-1	SEE SHEET 1, ZONE E4, FOR CONFIGURATION IN MANHOLES			NONE	H-2-140324
GW-2	SEE SHEET 1, ZONE E5, FOR CONFIGURATION IN MANHOLES			NONE	H-2-140324
2WPT-1	SEE SHEET 1, ZONE E6, FOR CONFIGURATION IN MANHOLES			NONE	H-2-140324
GW-3	SEE SHEET 1, ZONE E7, FOR CONFIGURATION IN MANHOLES			NONE	H-2-140324
GW-4	SEE SHEET 1, ZONE D8, FOR CONFIGURATION IN MANHOLES			NONE	H-2-140325
GW-5	80F-050	80F-077	80F-205	NONE	H-2-140325
GW-6	80F-051	80F-078	80F-206	NONE	H-2-140326
GW-7	80F-052	80F-079	80F-207	NONE	H-2-140326
GW-8	80F-053	80F-080	80F-208	NONE	H-2-140327
GW-9	80F-054	80F-081	80F-209	NONE	H-2-140327
GW-10	80F-055	80F-082	80F-210	NONE	H-2-140328
GW-11	80F-056	80F-083	80F-211	NONE	H-2-140328
GW-12	80F-057	80F-084	80F-212	NONE	H-2-140328
GW-13	80F-058	80F-085	80F-213	NONE	H-2-140328
GW-14	NONE	NONE	NONE	80F-086	H-2-140329
GW-15	80F-059	80F-087	80F-215	NONE	H-2-140329
GW-16	80F-060	80F-088	80F-218	NONE	H-2-140329
GW-17	NONE	NONE	NONE	80F-089	H-2-140329
GW-18	80F-081	80F-090	80F-218	NONE	H-2-140329
GW-19	NONE	NONE	NONE	80F-091	H-2-140330
GW-20	80F-062	80F-092	80F-220	NONE	H-2-140330
GW-21	80F-063	80F-093	80F-221	NONE	H-2-140330
GW-22	SEE THIS SHEET, ZONE D7, FOR CONFIGURATION IN MANHOLE			NONE	H-2-140331
GW-23	80F-065	80F-095	80F-223	NONE	H-2-140331
GW-24	80F-066	80F-096	80F-224	NONE	H-2-140331
GW-25	80F-067	80F-097	80F-225	NONE	H-2-140332
GW-26	80F-068	80F-098	80F-226	NONE	H-2-140332
GW-27	80F-069	80F-099	80F-227	NONE	H-2-140332
GW-28	80F-070	80F-100	80F-228	NONE	H-2-140333
GW-29	NONE	NONE	NONE	80F-101	H-2-140333
GW-30	80F-071	80F-102	80F-230	NONE	H-2-140333
GW-31	80F-072	80F-103	80F-231	NONE	H-2-140333
GW-32	NONE	80F-022	80F-021	NONE	H-2-140368
UP1-1	SEE H-2-827217 SHEET 1 FOR VALVE CONFIGURATION				H-2-827212-2
UP1-2	SEE H-2-827217 SHEET 1 FOR VALVE CONFIGURATION				H-2-827212-2
UP1-3	SEE H-2-827217 SHEET 1 FOR VALVE CONFIGURATION				H-2-827212-1
UP1-4	SEE H-2-827217 SHEET 1 FOR VALVE CONFIGURATION				H-2-827212-1
UP1-5	SEE H-2-827217 SHEET 1 FOR VALVE CONFIGURATION				H-2-827212-2
UP1-6	SEE H-2-827217 SHEET 1 FOR VALVE CONFIGURATION				H-2-827212-2

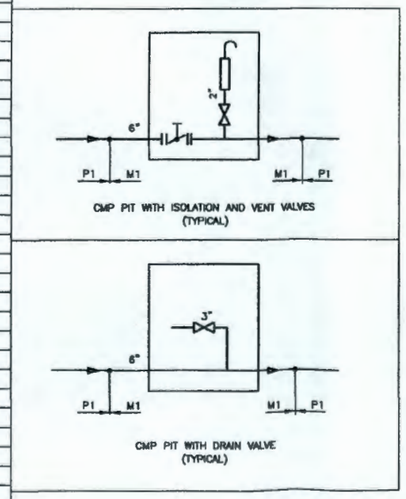

FOR SYMBOL LEGEND SEE SHEET 1

DRAWING TRACEABILITY LIST

DWG NO	TITLE	REF NUMBER	TITLE
		NEXT USED ON	REFERENCES

REVISIONS

INCORPORATED
ECR-10-001873
ECR-13-000354

KDJ 4/13

CONSTRUCTION

SAFETY SIGNIFICANT(SC) 11-10-10-96

U.S. DEPARTMENT OF ENERGY
Richland Operations Office
FLUOR DANIEL NORTHWEST, INC.

PIPING P & ID
GROUNDWATER TRANSFER,
LERF

NO.4292BX GROUNDWATER PIPELINE TIE-INS

242AL 7004 H-2-827217 B

NONE 612869

PLOT SCALE: 1=1

GTITLE.DWG (1/96)
KEH 2297.00

ECR-14-000762 Page 4

DWG NO H-2-833526 SH 5 OF REV 8

DRAWING NUMBER	SHEET TITLE
H-2-833543-01	CONTROL SYSTEM 200W PUMP & TREAT I/O DIAGRAM DPC-Y0C
H-2-833543-02	CONTROL SYSTEM 200W PUMP & TREAT I/O DIAGRAM DPC-Y0C
H-2-833543-03	CONTROL SYSTEM 200W PUMP & TREAT I/O DIAGRAM DPC-Y0E
H-2-833543-04	CONTROL SYSTEM 200W PUMP & TREAT I/O DIAGRAM DPC-Y0F
H-2-833543-05	CONTROL SYSTEM 200W PUMP & TREAT I/O DIAGRAM DPC-Y0G
H-2-833543-06	CONTROL SYSTEM 200W PUMP & TREAT I/O DIAGRAM DPC-Y0H
H-2-833543-07	CONTROL SYSTEM 200W PUMP & TREAT I/O DIAGRAM DPC-Y0J
H-2-833543-08	CONTROL SYSTEM 200W PUMP & TREAT I/O DIAGRAM DPC-Y0K
H-2-833543-09	CONTROL SYSTEM 200W PUMP & TREAT I/O DIAGRAM DPC-Y0K
H-2-833543-10	CONTROL SYSTEM 200W PUMP & TREAT I/O DIAGRAM DPC-Y0L
H-2-833543-11	CONTROL SYSTEM 200W PUMP & TREAT I/O DIAGRAM DPC-Y0M
H-2-833543-12	CONTROL SYSTEM 200W PUMP & TREAT I/O DIAGRAM DPC-Y0N
H-2-833543-13	CONTROL SYSTEM 200W PUMP & TREAT I/O DIAGRAM DPC-Y0P
H-2-833543-14	CONTROL SYSTEM 200W PUMP & TREAT I/O DIAGRAM DPC-Y0P
H-2-833543-15	CONTROL SYSTEM 200W PUMP & TREAT I/O DIAGRAM DPC-Y0Q
H-2-833543-16	CONTROL SYSTEM 200W PUMP & TREAT I/O DIAGRAM DPC-Y0R
H-2-833543-17	CONTROL SYSTEM 200W PUMP & TREAT I/O DIAGRAM DPC-Y0R
H-2-833543-18	CONTROL SYSTEM 200W PUMP & TREAT I/O DIAGRAM DPC-Y0S
H-2-833543-19	CONTROL SYSTEM 200W PUMP & TREAT I/O DIAGRAM DPC-Y0TA
H-2-833543-20	CONTROL SYSTEM 200W PUMP & TREAT I/O DIAGRAM DPC-Y0TB
H-2-833543-21	CONTROL SYSTEM 200W PUMP & TREAT I/O DIAGRAM DPC-Y0U
H-2-833543-22	CONTROL SYSTEM 200W PUMP & TREAT I/O DIAGRAM DPC-Y0UA
H-2-833543-23	CONTROL SYSTEM 200W PUMP & TREAT I/O DIAGRAM DPC-Y0UB
H-2-833543-24	CONTROL SYSTEM 200W PUMP & TREAT I/O DIAGRAM DPC-Y0V
H-2-833543-25	CONTROL SYSTEM 200W PUMP & TREAT I/O DIAGRAM DPC-Y0W
H-2-833543-26	CONTROL SYSTEM 200W PUMP & TREAT I/O DIAGRAM DPC-Y0X
H-2-833543-27	CONTROL SYSTEM 200W PUMP & TREAT I/O DIAGRAM DPC-Y0Y
H-2-833543-28	CONTROL SYSTEM 200W PUMP & TREAT I/O DIAGRAM DPC-Y0B
H-2-833543-29	CONTROL SYSTEM 200W PUMP & TREAT I/O DIAGRAM DPC-Y0Z
H-2-833543-30	CONTROL SYSTEM 200W PUMP & TREAT I/O DIAGRAM DPC-Y92
H-2-833544-01	P&IDS RAD BLDG URANIUM INLET TANK
H-2-833544-02	P&IDS RAD BLDG URANIUM IX SYSTEM
H-2-833544-03A	P&IDS RAD BLDG TC-99 INLET TANK
H-2-833544-03B	P&IDS RAD BLDG TC-99 INLET TANK
H-2-833544-03C	P&IDS RAD BLDG TC-99 INLET TANK
H-2-833544-03D	P&IDS RAD BLDG TC-99 INLET TANK
H-2-833544-04A	P&IDS RAD BLDG TC-99 IX UNIT A COLUMN 1
H-2-833544-04B	P&IDS RAD BLDG TC-99 IX UNIT A COLUMN 2
H-2-833544-04C	P&IDS RAD BLDG TC-99 IX UNIT A COLUMN 3
H-2-833544-04D	P&IDS RAD BLDG TC-99 IX BAG FILTERS
H-2-833544-05A	P&IDS RAD BLDG TC-99 IX UNIT B COLUMN 1

DRAWING NUMBER	SHEET TITLE
H-2-833544-05B	P&IDS RAD BLDG TC-99 IX UNIT B COLUMN 2
H-2-833544-05C	P&IDS RAD BLDG TC-99 IX UNIT B COLUMN 3
H-2-833544-06A	P&IDS RAD BLDG TC-99 IX UNIT C COLUMN 1
H-2-833544-06B	P&IDS RAD BLDG TC-99 IX UNIT C COLUMN 2
H-2-833544-06C	P&IDS RAD BLDG TC-99 IX UNIT C COLUMN 3
H-2-833544-07A	P&IDS RAD BLDG UV SYSTEM
H-2-833544-08A	P&IDS BIO PROCESS BLDG EQUALIZATION TANK
H-2-833544-08B	P&IDS BIO PROCESS BLDG EQUALIZATION TANK
H-2-833544-08C	P&IDS BIO PROCESS BLDG EQUALIZATION TANK
H-2-833544-08D	P&IDS BIO PROCESS BLDG EQUALIZATION TANK
H-2-833544-08E	P&IDS BIO PROCESS BLDG EQUALIZATION TANK
H-2-833544-08F	P&IDS BIO PROCESS BLDG EQUALIZATION TANK
H-2-833544-09A	P&IDS BIO PROCESS BLDG RECYCLE TANK
H-2-833544-09B	P&IDS BIO PROCESS BLDG RECYCLE TANK
H-2-833544-09C	P&IDS BIO PROCESS BLDG RECYCLE TANK
H-2-833544-10A	P&IDS BIO PROCESS BLDG FLUIDIZED BED REACTOR A
H-2-833544-10B	P&IDS BIO PROCESS BLDG FLUIDIZED BED REACTOR A
H-2-833544-10C	P&IDS BIO PROCESS BLDG FLUIDIZED BED REACTOR A
H-2-833544-10D	P&IDS BIO PROCESS BLDG FLUIDIZED BED REACTOR A
H-2-833544-10E	P&IDS BIO PROCESS BLDG FLUIDIZED BED REACTOR A
H-2-833544-10F	P&IDS BIO PROCESS BLDG FLUIDIZED BED REACTOR A
H-2-833544-11A	P&IDS BIO PROCESS BLDG FLUIDIZED BED REACTOR B
H-2-833544-11B	P&IDS BIO PROCESS BLDG FLUIDIZED BED REACTOR B
H-2-833544-11C	P&IDS BIO PROCESS BLDG FLUIDIZED BED REACTOR B
H-2-833544-11D	P&IDS BIO PROCESS BLDG FLUIDIZED BED REACTOR B
H-2-833544-11E	P&IDS BIO PROCESS BLDG FLUIDIZED BED REACTOR B
H-2-833544-11F	P&IDS BIO PROCESS BLDG FLUIDIZED BED REACTOR B
H-2-833544-12A	P&IDS BIO PROCESS BLDG FLUIDIZED BED REACTOR C
H-2-833544-12B	P&IDS BIO PROCESS BLDG FLUIDIZED BED REACTOR C
H-2-833544-12C	P&IDS BIO PROCESS BLDG FLUIDIZED BED REACTOR C
H-2-833544-12D	P&IDS BIO PROCESS BLDG FLUIDIZED BED REACTOR C
H-2-833544-12E	P&IDS BIO PROCESS BLDG FLUIDIZED BED REACTOR C
H-2-833544-12F	P&IDS BIO PROCESS BLDG FLUIDIZED BED REACTOR C
H-2-833544-13A	P&IDS BIO PROCESS BLDG AMT SPLITTER STRUCTURE
H-2-833544-14A	P&IDS BIO PROCESS BLDG AERATION MEMBRANE TANK A
H-2-833544-14B	P&IDS BIO PROCESS BLDG AERATION MEMBRANE TANK A

DRAWING NUMBER	SHEET TITLE
H-2-833544-14C	P&IDS BIO PROCESS BLDG AERATION MEMBRANE TANK A
H-2-833544-14D	P&IDS BIO PROCESS BLDG MBR PERMEATE HEADER
H-2-833544-15A	P&IDS BIO PROCESS BLDG AERATION MEMBRANE TANK B
H-2-833544-15B	P&IDS BIO PROCESS BLDG AERATION MEMBRANE TANK B
H-2-833544-15C	P&IDS BIO PROCESS BLDG AERATION MEMBRANE TANK B
H-2-833544-16A	P&IDS BIO PROCESS BLDG AERATION MEMBRANE TANK C
H-2-833544-16B	P&IDS BIO PROCESS BLDG AERATION MEMBRANE TANK C
H-2-833544-16C	P&IDS BIO PROCESS BLDG AERATION MEMBRANE TANK C
H-2-833544-17A	P&IDS BID PROCESS BLDG AERATION MEMBRANE TANK D
H-2-833544-17B	P&IDS BIO PROCESS BLDG AERATION MEMBRANE TANK D
H-2-833544-17C	P&IDS BIO PROCESS BLDG AERATION MEMBRANE TANK D
H-2-833544-18A	P&IDS BIO PROCESS BLDG AERATION MEMBRANE TANK E
H-2-833544-18B	P&IDS BIO PROCESS BLDG AERATION MEMBRANE TANK E
H-2-833544-18C	P&IDS BIO PROCESS BLDG AERATION MEMBRANE TANK E
H-2-833544-19A	P&IDS BIO PROCESS BLDG AERATION MEMBRANE TANK F
H-2-833544-19B	P&IDS BIO PROCESS BLDG AERATION MEMBRANE TANK F
H-2-833544-19C	P&IDS BIO PROCESS BLDG AERATION MEMBRANE TANK F
H-2-833544-20A	P&IDS BIO PROCESS BLDG AMT A SLUDGE PUMPING
H-2-833544-20B	P&IDS BIO PROCESS BLDG AMT B SLUDGE PUMPING
H-2-833544-20C	P&IDS BIO PROCESS BLDG AMT C SLUDGE PUMPING
H-2-833544-20D	P&IDS BIO PROCESS BLDG AMT D SLUDGE PUMPING
H-2-833544-20E	P&IDS BIO PROCESS BLDG AMT E SLUDGE PUMPING
H-2-833544-20F	P&IDS BIO PROCESS BLDG AMT F SLUDGE PUMPING
H-2-833544-21A	P&IDS BIO PROCESS BLDG AIR STRIPPER A
H-2-833544-21B	P&IDS BIO PROCESS BLDG AIR STRIPPER A
H-2-833544-21C	P&IDS BIO PROCESS BLDG AIR STRIPPER A
H-2-833544-21D	P&IDS BIO PROCESS BLDG AIR STRIPPER A
H-2-833544-22A	P&IDS BIO PROCESS BLDG AIR STRIPPER A VOG
H-2-833544-23A	P&IDS BIO PROCESS BLDG AIR STRIPPER B
H-2-833544-23B	P&IDS BIO PROCESS BLDG AIR STRIPPER B
H-2-833544-23C	P&IDS BIO PROCESS BLDG AIR STRIPPER B
H-2-833544-23D	P&IDS BIO PROCESS BLDG AIR STRIPPER B

DWG NO	TITLE
DRAWING TRACEABILITY LIST	

REF NUMBER	TITLE
NEXT USED ON	REFERENCES

REV NO	DATE	DESCRIPTION	REV BY	CHK	DWN	CHKD
8		REVISED PER ECR-13-000744				
7		REVISED PER DCN-200W-278	WJR 7/17/02		GGP 8/12/02	BLS 8/25/02

REVISIONS

NAME: WALTER, D YEARSLEY, D YEARSLEY, B SASSER

DESIGN AUTHORITY: SASSER

U.S. DEPARTMENT OF ENERGY
Richland Operations Office

GENERAL INDEX OF DRAWINGS

SIZE D | BLDG NO 200G | SYSTEM NO 0000 | DWG NO H-2-833526 | REV 8

SCALE NONE | SHEET 5 OF

DCN-200W-014

XXXX PLOTID XXXX

ECR-14-000762 Page 15
"WAS CONDITION"

DWG NO H-2-833526 SH 5 OF REV 8

DRAWING NUMBER	SHEET TITLE
H-2-833543-01	CONTROL SYSTEM 200W PUMP & TREAT I/O DIAGRAM DPC-Y0C
H-2-833543-02	CONTROL SYSTEM 200W PUMP & TREAT I/O DIAGRAM DPC-Y0C
H-2-833543-03	CONTROL SYSTEM 200W PUMP & TREAT I/O DIAGRAM DPC-Y0E
H-2-833543-04	CONTROL SYSTEM 200W PUMP & TREAT I/O DIAGRAM DPC-Y0F
H-2-833543-05	CONTROL SYSTEM 200W PUMP & TREAT I/O DIAGRAM DPC-Y0G
H-2-833543-06	CONTROL SYSTEM 200W PUMP & TREAT I/O DIAGRAM DPC-Y0H
H-2-833543-07	CONTROL SYSTEM 200W PUMP & TREAT I/O DIAGRAM DPC-Y0J
H-2-833543-08	CONTROL SYSTEM 200W PUMP & TREAT I/O DIAGRAM DPC-Y0K
H-2-833543-09	CONTROL SYSTEM 200W PUMP & TREAT I/O DIAGRAM DPC-Y0K
H-2-833543-10	CONTROL SYSTEM 200W PUMP & TREAT I/O DIAGRAM DPC-Y0L
H-2-833543-11	CONTROL SYSTEM 200W PUMP & TREAT I/O DIAGRAM DPC-Y0M
H-2-833543-12	CONTROL SYSTEM 200W PUMP & TREAT I/O DIAGRAM DPC-Y0N
H-2-833543-13	CONTROL SYSTEM 200W PUMP & TREAT I/O DIAGRAM DPC-Y0P
H-2-833543-14	CONTROL SYSTEM 200W PUMP & TREAT I/O DIAGRAM DPC-Y0P
H-2-833543-15	CONTROL SYSTEM 200W PUMP & TREAT I/O DIAGRAM DPC-Y0Q
H-2-833543-16	CONTROL SYSTEM 200W PUMP & TREAT I/O DIAGRAM DPC-Y0R
H-2-833543-17	CONTROL SYSTEM 200W PUMP & TREAT I/O DIAGRAM DPC-Y0R
H-2-833543-18	CONTROL SYSTEM 200W PUMP & TREAT I/O DIAGRAM DPC-Y0S
H-2-833543-19	CONTROL SYSTEM 200W PUMP & TREAT I/O DIAGRAM DPC-Y0TA
H-2-833543-20	CONTROL SYSTEM 200W PUMP & TREAT I/O DIAGRAM DPC-Y0TB
H-2-833543-21	CONTROL SYSTEM 200W PUMP & TREAT I/O DIAGRAM DPC-Y0U
H-2-833543-22	CONTROL SYSTEM 200W PUMP & TREAT I/O DIAGRAM DPC-Y0UA
H-2-833543-23	CONTROL SYSTEM 200W PUMP & TREAT I/O DIAGRAM DPC-Y0UB
H-2-833543-24	CONTROL SYSTEM 200W PUMP & TREAT I/O DIAGRAM DPC-Y0V
H-2-833543-25	CONTROL SYSTEM 200W PUMP & TREAT I/O DIAGRAM DPC-Y0W
H-2-833543-26	CONTROL SYSTEM 200W PUMP & TREAT I/O DIAGRAM DPC-Y0X
H-2-833543-27	CONTROL SYSTEM 200W PUMP & TREAT I/O DIAGRAM DPC-Y0Y
H-2-833543-28	CONTROL SYSTEM 200W PUMP & TREAT I/O DIAGRAM DPC-Y0B
H-2-833543-29	CONTROL SYSTEM 200W PUMP & TREAT I/O DIAGRAM DPC-Y0Z
H-2-833543-30	CONTROL SYSTEM 200W PUMP & TREAT I/O DIAGRAM DPC-Y92
H-2-833543-31	CONTROL SYSTEM 200W PUMP & TREAT I/O DIAGRAM DPC-Y17
H-2-833544-01	P&IDS RAD BLDG URANIUM INLET TANK
H-2-833544-02	P&IDS RAD BLDG URANIUM IX SYSTEM
H-2-833544-03A	P&IDS RAD BLDG TC-99 INLET TANK
H-2-833544-03B	P&IDS RAD BLDG TC-99 INLET TANK
H-2-833544-03C	P&IDS RAD BLDG TC-99 INLET TANK
H-2-833544-03D	P&IDS RAD BLDG TC-99 INLET TANK
H-2-833544-04A	P&IDS RAD BLDG TC-99 IX UNIT A COLUMN 1
H-2-833544-04B	P&IDS RAD BLDG TC-99 IX UNIT A COLUMN 2
H-2-833544-04C	P&IDS RAD BLDG TC-99 IX UNIT A COLUMN 3
H-2-833544-04D	P&IDS RAD BLDG TC-99 IX BAG FILTERS
H-2-833544-05A	P&IDS RAD BLDG TC-99 IX UNIT B COLUMN 1

DRAWING NUMBER	SHEET TITLE
H-2-833544-05B	P&IDS RAD BLDG TC-99 IX UNIT B COLUMN 2
H-2-833544-05C	P&IDS RAD BLDG TC-99 IX UNIT B COLUMN 3
H-2-833544-06A	P&IDS RAD BLDG TC-99 IX UNIT C COLUMN 1
H-2-833544-06B	P&IDS RAD BLDG TC-99 IX UNIT C COLUMN 2
H-2-833544-06C	P&IDS RAD BLDG TC-99 IX UNIT C COLUMN 3
H-2-833544-07A	P&IDS RAD BLDG UV SYSTEM
H-2-833544-08A	P&IDS BIO PROCESS BLDG EQUALIZATION TANK
H-2-833544-08B	P&IDS BIO PROCESS BLDG EQUALIZATION TANK
H-2-833544-08C	P&IDS BIO PROCESS BLDG EQUALIZATION TANK
H-2-833544-08D	P&IDS BIO PROCESS BLDG EQUALIZATION TANK
H-2-833544-08E	P&IDS BIO PROCESS BLDG EQUALIZATION TANK
H-2-833544-08F	P&IDS BIO PROCESS BLDG EQUALIZATION TANK
H-2-833544-09A	P&IDS BIO PROCESS BLDG RECYCLE TANK
H-2-833544-09B	P&IDS BIO PROCESS BLDG RECYCLE TANK
H-2-833544-09C	P&IDS BIO PROCESS BLDG RECYCLE TANK
H-2-833544-10A	P&IDS BIO PROCESS BLDG FLUIDIZED BED REACTOR A
H-2-833544-10B	P&IDS BIO PROCESS BLDG FLUIDIZED BED REACTOR A
H-2-833544-10C	P&IDS BIO PROCESS BLDG FLUIDIZED BED REACTOR A
H-2-833544-10D	P&IDS BIO PROCESS BLDG FLUIDIZED BED REACTOR A
H-2-833544-10E	P&IDS BIO PROCESS BLDG FLUIDIZED BED REACTOR A
H-2-833544-10F	P&IDS BIO PROCESS BLDG FLUIDIZED BED REACTOR A
H-2-833544-11A	P&IDS BIO PROCESS BLDG FLUIDIZED BED REACTOR B
H-2-833544-11B	P&IDS BIO PROCESS BLDG FLUIDIZED BED REACTOR B
H-2-833544-11C	P&IDS BIO PROCESS BLDG FLUIDIZED BED REACTOR B
H-2-833544-11D	P&IDS BIO PROCESS BLDG FLUIDIZED BED REACTOR B
H-2-833544-11E	P&IDS BIO PROCESS BLDG FLUIDIZED BED REACTOR B
H-2-833544-11F	P&IDS BIO PROCESS BLDG FLUIDIZED BED REACTOR B
H-2-833544-12A	P&IDS BIO PROCESS BLDG FLUIDIZED BED REACTOR C
H-2-833544-12B	P&IDS BIO PROCESS BLDG FLUIDIZED BED REACTOR C
H-2-833544-12C	P&IDS BIO PROCESS BLDG FLUIDIZED BED REACTOR C
H-2-833544-12D	P&IDS BIO PROCESS BLDG FLUIDIZED BED REACTOR C
H-2-833544-12E	P&IDS BIO PROCESS BLDG FLUIDIZED BED REACTOR C
H-2-833544-12F	P&IDS BIO PROCESS BLDG FLUIDIZED BED REACTOR C
H-2-833544-13A	P&IDS BIO PROCESS BLDG AMT SPLITTER STRUCTURE
H-2-833544-14A	P&IDS BIO PROCESS BLDG AERATION MEMBRANE TANK A
H-2-833544-14B	P&IDS BIO PROCESS BLDG AERATION MEMBRANE TANK A

DRAWING NUMBER	SHEET TITLE
H-2-833544-14C	P&IDS BIO PROCESS BLDG AERATION MEMBRANE TANK A
H-2-833544-14D	P&IDS BIO PROCESS BLDG MBR PERMEATE HEADER
H-2-833544-15A	P&IDS BIO PROCESS BLDG AERATION MEMBRANE TANK B
H-2-833544-15B	P&IDS BIO PROCESS BLDG AERATION MEMBRANE TANK B
H-2-833544-15C	P&IDS BIO PROCESS BLDG AERATION MEMBRANE TANK B
H-2-833544-16A	P&IDS BIO PROCESS BLDG AERATION MEMBRANE TANK C
H-2-833544-16B	P&IDS BIO PROCESS BLDG AERATION MEMBRANE TANK C
H-2-833544-16C	P&IDS BIO PROCESS BLDG AERATION MEMBRANE TANK C
H-2-833544-17A	P&IDS BIO PROCESS BLDG AERATION MEMBRANE TANK D
H-2-833544-17B	P&IDS BIO PROCESS BLDG AERATION MEMBRANE TANK D
H-2-833544-17C	P&IDS BIO PROCESS BLDG AERATION MEMBRANE TANK D
H-2-833544-18A	P&IDS BIO PROCESS BLDG AERATION MEMBRANE TANK E
H-2-833544-18B	P&IDS BIO PROCESS BLDG AERATION MEMBRANE TANK E
H-2-833544-18C	P&IDS BIO PROCESS BLDG AERATION MEMBRANE TANK E
H-2-833544-19A	P&IDS BIO PROCESS BLDG AERATION MEMBRANE TANK F
H-2-833544-19B	P&IDS BIO PROCESS BLDG AERATION MEMBRANE TANK F
H-2-833544-19C	P&IDS BIO PROCESS BLDG AERATION MEMBRANE TANK F
H-2-833544-20A	P&IDS BIO PROCESS BLDG AMT A SLUDGE PUMPING
H-2-833544-20B	P&IDS BIO PROCESS BLDG AMT B SLUDGE PUMPING
H-2-833544-20C	P&IDS BIO PROCESS BLDG AMT C SLUDGE PUMPING
H-2-833544-20D	P&IDS BIO PROCESS BLDG AMT D SLUDGE PUMPING
H-2-833544-20E	P&IDS BIO PROCESS BLDG AMT E SLUDGE PUMPING
H-2-833544-20F	P&IDS BIO PROCESS BLDG AMT F SLUDGE PUMPING
H-2-833544-21A	P&IDS BIO PROCESS BLDG AIR STRIPPER A
H-2-833544-21B	P&IDS BIO PROCESS BLDG AIR STRIPPER A
H-2-833544-21C	P&IDS BIO PROCESS BLDG AIR STRIPPER A
H-2-833544-21D	P&IDS BIO PROCESS BLDG AIR STRIPPER A
H-2-833544-22A	P&IDS BIO PROCESS BLDG AIR STRIPPER A VOG
H-2-833544-23A	P&IDS BIO PROCESS BLDG AIR STRIPPER B
H-2-833544-23B	P&IDS BIO PROCESS BLDG AIR STRIPPER B
H-2-833544-23C	P&IDS BIO PROCESS BLDG AIR STRIPPER B
H-2-833544-23D	P&IDS BIO PROCESS BLDG AIR STRIPPER B

DWG NO	TITLE
DRAWING TRACEABILITY LIST	

REF NUMBER	TITLE
REFERENCES	
NEXT USED ON	

REV	REQ NO	DESCRIPTION	BY	CHK	ENGR	COMPANY
8		REVISED PER DCR-13-000744				
7		REVISED PER DCN-200W-279	WJB 7/11/12		GOB 8/1/12	BLS 7/26/12

REVISIONS

	NAME	DATE
DRAWN BY	WALTER	2/25/10
CHECKED BY	D YEARSLEY	2/26/10
ENGR	D YEARSLEY	2/26/10
PROJ ENGR	B SASSER	3/2/10
DESIGN AUTHORITY	KASSER	3/2/10

U.S. DEPARTMENT OF ENERGY
Richland Operations Office

TITLE GENERAL INDEX OF DRAWINGS

SIZE D | BLDG NO 2000 | SYSTEM NO 3000 | DWG NO H-2-833526 | REV 8

SCALE NONE | SERIES DCN-200W-014 | SHEET 5

XXXX PLOTID XXXX

DOE_TB_3.DWG (01-01)

ECR-14-000762 Page 16

DRAWING NUMBER	SHEET TITLE
H-2-833546-01	CONTROL SYSTEM BIO PROCESS BLDG PANEL DPC-YOA
H-2-833546-02	CONTROL SYSTEM BIO PROCESS BLDG PANEL DPC-YOB
H-2-833546-03	CONTROL SYSTEM BIO PROCESS & RAD BLDG RIO PANELS
H-2-833546-04	CONTROL SYSTEM BIO PROCESS BLDG PANEL DPC-YOC
H-2-833546-05	CONTROL SYSTEM RAD BLDG PANEL DPC-YOTA
H-2-833546-06	CONTROL SYSTEM 200W PUMP & TREAT POWER SUPPLY PANEL
H-2-833546-07	CONTROL SYSTEM 200W PUMP & TREAT TANK ALARM PANEL
H-2-833546-08	CONTROL SYSTEM BIO PROCESS BLDG PANEL DPC-YOB
H-2-833546-09	CONTROL SYSTEM BIO PROCESS BLDG TELECOM ROOM
H-2-833546-10	RESERVED
H-2-833547-01	RESERVED
H-2-833547-02	RESERVED
H-2-833547-03	RESERVED
H-2-833547-04	RESERVED
H-2-833547-05	CONTROL SYSTEM WIRING DIAGRAM DPC-YOTA
H-2-833547-06	CONTROL SYSTEM WIRING DIAGRAM DPC-YOTA
H-2-833547-07	CONTROL SYSTEM WIRING DIAGRAM DPC-YOTA
H-2-833547-08	CONTROL SYSTEM WIRING DIAGRAM DPC-YOTA
H-2-833550-01	CIVIL BIO PROCESS & RAD BLDGS FACILITY SITE PLAN
H-2-833550-02	CIVIL BIO PROCESS & RAD BLDGS LAYOUT & PAVING PLAN
H-2-833550-03	CIVIL BIO PROCESS & RAD BLDGS GRADING DRAINAGE PLAN
H-2-833550-04	CIVIL BIO PROCESS & RAD BLDGS SECTIONS & DETAILS
H-2-833550-05	CIVIL BIO PROCESS & RAD BLDGS DETAILS
H-2-833550-06	CIVIL BIO PROCESS & RAD BLDGS YARD PIPING PLAN
H-2-833550-07	CIVIL BIO PROCESS & RAD BLDGS ENLARGED PLANS
H-2-833550-08	CIVIL BIO PROCESS & RAD BLDGS ENLARGED PLANS
H-2-833550-09	CIVIL BIO PROCESS & RAD BLDGS DETAILS
H-2-833550-10	ELECTRICAL BIO PROCESS & RAD BLDGS LAYOUT PLAN
H-2-833550-11	ELECTRICAL BIO PROCESS & RAD BLDGS ENLARGED PLANS
H-2-833550-12	ELECTRICAL BIO PROCESS & RAD BLDGS DETAILS
H-2-833550-13	ELECTRICAL BIO PROCESS & RAD BLDG DETAILS
H-2-833550-14	ELECTRICAL BIO PROCESS & RAD BLDG ENLARGED PLAN
H-2-833550-15	ELECTRICAL BIO PROCESS & RAD BLDG DETAILS
H-2-833550-16	ELECTRICAL BIO PROCESS BLDG SPECIAL SYSTEM DETAILS
H-2-833550-17	ELECTRICAL BIO PROCESS BLDG SPECIAL SYSTEM SITE PLAN
H-2-833550-18	ELECTRICAL RAD BLDG SPECIAL SYSTEM SITE PLAN
H-2-833551-01	ARCHITECTURAL BIO PROCESS BLDG FLOOR PLAN

DRAWING NUMBER	SHEET TITLE
H-2-833551-02	ARCHITECTURAL BIO PROCESS BLDG PARTIAL FLOOR PLAN WEST
H-2-833551-03	ARCHITECTURAL BIO PROCESS BLDG PARTIAL FLOOR PLAN WEST
H-2-833551-04	ARCHITECTURAL BIO PROCESS BLDG PLAN PAINTING/COATINGS
H-2-833552-01	ARCHITECTURAL BIO PROCESS BLDG ELEVATIONS
H-2-833553-01	ARCHITECTURAL BIO PROCESS BLDG SECTIONS
H-2-833553-02	ARCHITECTURAL BIO PROCESS BLDG SECTIONS & DETAILS
H-2-833553-03	ARCHITECTURAL BIO PROCESS BLDG SECTIONS & DETAILS
H-2-833554-01	ARCHITECTURAL BIO PROCESS BLDG ENLARGED PLAN/ELEVATIONS
H-2-833554-02	ARCHITECTURAL BIO PROCESS BLDG ENLARGED PLAN/SECTIONS
H-2-833555-01	STRUCTURAL BIO PROCESS BLDG FOUNDATION PLAN
H-2-833555-02	STRUCTURAL BIO PROCESS BLDG FOUNDATION PLAN AREA A
H-2-833555-03	STRUCTURAL BIO PROCESS BLDG FOUNDATION PLAN AREA B
H-2-833555-04	STRUCTURAL BIO PROCESS BLDG FOUNDATION PLAN AREA C
H-2-833555-05	STRUCTURAL BIO PROCESS BLDG SLAB SLOPE/SCREED PLAN
H-2-833555-06	STRUCTURAL BIO PROCESS BLDG CEILING SLAB FRAMING PLAN
H-2-833555-07	STRUCTURAL BIO PROCESS BLDG ROTARY DRUM MONORAIL
H-2-833555-08	STRUCTURAL BIO PROCESS BLDG CENTRIFUGE MONORAIL
H-2-833555-09	STRUCTURAL BIO PROCESS BLDG FOUNDATION DETAILS
H-2-833555-10	STRUCTURAL BIO PROCESS BLDG FOUNDATION DETAILS
H-2-833555-11	STRUCTURAL BIO PROCESS BLDG FOUNDATION DETAILS
H-2-833555-12	STRUCTURAL BIO PROCESS BLDG FOUNDATION DETAILS
H-2-833555-13	STRUCTURAL BIO PROCESS BLDG SECTIONS & DETAILS
H-2-833555-14	STRUCTURAL BIO PROCESS BLDG SECTIONS & DETAILS
H-2-833555-15	STRUCTURAL BIO PROCESS BLDG CHEMICAL STORAGE PLAN
H-2-833555-16	STRUCTURAL BIO PROCESS BLDG SECTIONS & DETAILS
H-2-833555-17	STRUCTURAL BIO PROCESS BLDG TANK ACCESS PLATFORM
H-2-833555-18	STRUCTURAL BIO PROCESS BLDG FOUNDATION DETAILS
H-2-833555-19	STRUCTURAL BIO PROCESS BLDG SECTIONS & DETAILS

DRAWING NUMBER	SHEET TITLE
H-2-833556-01	STRUCTURAL BIO PROCESS EQUIP PAD OVERALL FOUNDATION PLAN
H-2-833556-02	STRUCTURAL BIO PROCESS EQUIP PAD FOUNDATION PLAN AREA A
H-2-833556-03	STRUCTURAL BIO PROCESS EQUIP PAD FOUNDATION PLAN AREA B
H-2-833556-04	STRUCTURAL BIO PROCESS EQUIP PAD FOUNDATION PLAN AREA C
H-2-833556-05	STRUCTURAL BIO PROCESS EQUIP PAD SECTIONS & DETAILS
H-2-833556-06	STRUCTURAL BIO PROCESS EQUIP PAD SECTIONS & DETAILS
H-2-833556-07	STRUCTURAL BIO PROCESS EQUIP PAD SECTIONS & DETAILS
H-2-833556-08	STRUCTURAL BIO PROCESS EQUIP PAD SPLITTER BOX PLANS
H-2-833556-09	STRUCTURAL BIO PROCESS EQUIP PAD SPLITTER BOX SECTIONS
H-2-833556-10	STRUCTURAL BIO PROCESS EQUIP PAD SLUDGE/CENTRATE TANK PLATFORM
H-2-833556-11	STRUCTURAL BIO PROCESS EQUIP PAD AIR STRIPPER STAIR TOWER
H-2-833556-12	STRUCTURAL BIO PROCESS EQUIP PAD AIR STRIPPER STAIR TOWER
H-2-833556-13	STRUCTURAL BIO PROCESS EQUIP PAD AIR STRIPPER STAIR TOWER
H-2-833556-14	STRUCTURAL BIO PROCESS EQUIP PAD AIR STRIPPER STAIR TOWER
H-2-833556-15	STRUCTURAL BIO PROCESS EQUIP PAD MBR/SPLITTER ACCESS PLATFORM
H-2-833556-16	STRUCTURAL BIO PROCESS EQUIP PAD MBR/SPLITTER ACCESS PLATFORM
H-2-833556-17	STRUCTURAL BIO PROCESS EQUIP PAD FBR TANKS PLATFORM
H-2-833556-18	STRUCTURAL BIO PROCESS EQUIP PAD FBR TANKS PLATFORM
H-2-833556-19	STRUCTURAL BIO PROCESS EQUIP PAD BRIDGE CRANE FOUNDATION PLAN
H-2-833556-20	STRUCTURAL BIO PROCESS EQUIP PAD BRIDGE CRANE TOP PLAN
H-2-833556-21	STRUCTURAL BIO PROCESS EQUIP PAD BRIDGE CRANE DETAILS
H-2-833556-22	STRUCTURAL BIO PROCESS EQUIP PAD BRIDGE CRANE DETAILS
H-2-833556-23	STRUCTURAL BIO PROCESS EQUIP PAD INLET PIPE RACK
H-2-833556-24	STRUCTURAL BIO PROCESS EQUIP PAD INLET PIPE RACK
H-2-833556-25	STRUCTURAL BIO PROCESS EQUIP PAD INLET PIPE RACK
H-2-833556-26	STRUCTURAL BIO PROCESS EQUIP PAD INLET PIPE RACK
H-2-833556-27	STRUCTURAL BIO PROCESS EQUIP PAD INLET PIPE RACK
H-2-833556-28	STRUCTURAL BIO PROCESS EQUIP PAD VOG PIPE RACK
H-2-833556-29	STRUCTURAL BIO PROCESS EQUIP PAD VOG PIPE RACK
H-2-833556-30	STRUCTURAL BIO PROCESS EQUIP PAD VOG PIPE RACK DETAILS
H-2-833556-31	STRUCTURAL BIO PROCESS EQUIP PAD BRIDGE CRANE ACCESS
H-2-833556-32	STRUCTURAL BIO PROCESS EQUIP PAD BRIDGE CRANE ACCESS
H-2-833556-33	STRUCTURAL BIO PROCESS EQUIP PAD BRIDGE CRANE ACCESS
H-2-833556-34	RESERVED
H-2-833556-35	RESERVED
H-2-833556-36	STRUCTURAL BIO PROCESS EQUIP PAD FBR TANK AREA
H-2-833556-37	RESERVED
H-2-833556-38	RESERVED
H-2-833556-39	RESERVED
H-2-833556-40	STRUCTURAL BIO PROCESS BLDG OVERALL PIPE SUPPORT PLAN

"WAS CONDITION"

ECR-14-000762 Page 17

DWG NO	TITLE
DRAWING TRACEABILITY LIST	

REF NUMBER	TITLE
NEXT USED ON	REFERENCES

REV	DWG NO	DESCRIPTION	DRWN	CHKD	APPD	DATE
5		REVISED PER ECR-14-001163	ERW 10/7/14			
4		REVISED PER ECR-13-000556	CAB 8/2/13	CGP 8/15/13	BLS 8/15/13	

REVISIONS

NAME: W. BOULDS (DRWN); SK FELTON (DSGNR); DE SASSER (DESIGN AUTHORITY)

U.S. DEPARTMENT OF ENERGY
Richland Operations Office

GENERAL INDEX OF DRAWINGS

SIZE D | SYS 200G | AREA 0000 | DWG NO H-2-833526 | REV 5

SCALE NONE | TEMPLATE DCN-200W-068 | SHEET 9 OF

XXXX PLOTID XXXX

DRAWING NUMBER	SHEET TITLE
H-2-833546-01	CONTROL SYSTEM BIO PROCESS BLDG PANEL DPC-YOA
H-2-833546-02	CONTROL SYSTEM BIO PROCESS BLDG PANEL DPC-YOB
H-2-833546-03	CONTROL SYSTEM BIO PROCESS & RAD BLDG RIO PANELS
H-2-833546-04	CONTROL SYSTEM BIO PROCESS BLDG PANEL DPC-YOC
H-2-833546-05	CONTROL SYSTEM RAD BLDG PANEL DPC-YOTA
H-2-833546-06	CONTROL SYSTEM 200W PUMP & TREAT POWER SUPPLY PANEL
H-2-833546-07	CONTROL SYSTEM 200W PUMP & TREAT TANK ALARM PANEL
H-2-833546-08	CONTROL SYSTEM BIO PROCESS BLDG PANEL DPC-YOB
H-2-833546-09	CONTROL SYSTEM BIO PROCESS BLDG TELECOM ROOM
H-2-833546-10	RESERVED
H-2-833547-01	CONTROL SYSTEM WIRING DIAGRAM DPC-Y17
H-2-833547-02	CONTROL SYSTEM WIRING DIAGRAM DPC-Y17
H-2-833547-03	RESERVED
H-2-833547-04	RESERVED
H-2-833547-05	CONTROL SYSTEM WIRING DIAGRAM DPC-YOTA
H-2-833547-06	CONTROL SYSTEM WIRING DIAGRAM DPC-YOTA
H-2-833547-07	CONTROL SYSTEM WIRING DIAGRAM DPC-YOTA
H-2-833547-08	CONTROL SYSTEM WIRING DIAGRAM DPC-YOTA
H-2-833550-01	CIVIL BIO PROCESS & RAD BLDGS FACILITY SITE PLAN
H-2-833550-02	CIVIL BIO PROCESS & RAD BLDGS LAYOUT & PAVING PLAN
H-2-833550-03	CIVIL BIO PROCESS & RAD BLDGS GRADING DRAINAGE PLAN
H-2-833550-04	CIVIL BIO PROCESS & RAD BLDGS SECTIONS & DETAILS
H-2-833550-05	CIVIL BIO PROCESS & RAD BLDGS DETAILS
H-2-833550-06	CIVIL BIO PROCESS & RAD BLDGS YARD PIPING PLAN
H-2-833550-07	CIVIL BIO PROCESS & RAD BLDGS ENLARGED PLANS
H-2-833550-08	CIVIL BIO PROCESS & RAD BLDGS ENLARGED PLANS
H-2-833550-09	CIVIL BIO PROCESS & RAD BLDGS DETAILS
H-2-833550-10	ELECTRICAL BIO PROCESS & RAD BLDGS LAYOUT PLAN
H-2-833550-11	ELECTRICAL BIO PROCESS & RAD BLDGS ENLARGED PLANS
H-2-833550-12	ELECTRICAL BIO PROCESS & RAD BLDGS DETAILS
H-2-833550-13	ELECTRICAL BIO PROCESS & RAD BLDG DETAILS
H-2-833550-14	ELECTRICAL BIO PROCESS & RAD BLDG ENLARGED PLAN
H-2-833550-15	ELECTRICAL BIO PROCESS & RAD BLDG DETAILS
H-2-833550-16	ELECTRICAL BIO PROCESS BLDG SPECIAL SYSTEM DETAILS
H-2-833550-17	ELECTRICAL BIO PROCESS BLDG SPECIAL SYSTEM SITE PLAN
H-2-833550-18	ELECTRICAL RAD BLDG SPECIAL SYSTEM SITE PLAN
H-2-833551-01	ARCHITECTURAL BIO PROCESS BLDG FLOOR PLAN

DRAWING NUMBER	SHEET TITLE
H-2-833551-02	ARCHITECTURAL BIO PROCESS BLDG PARTIAL FLOOR PLAN WEST
H-2-833551-03	ARCHITECTURAL BIO PROCESS BLDG PARTIAL FLOOR PLAN WEST
H-2-833551-04	ARCHITECTURAL BIO PROCESS BLDG PLAN PAINTING/COATINGS
H-2-833552-01	ARCHITECTURAL BIO PROCESS BLDG ELEVATIONS
H-2-833553-01	ARCHITECTURAL BIO PROCESS BLDG SECTIONS
H-2-833553-02	ARCHITECTURAL BIO PROCESS BLDG SECTIONS & DETAILS
H-2-833553-03	ARCHITECTURAL BIO PROCESS BLDG SECTIONS & DETAILS
H-2-833554-01	ARCHITECTURAL BIO PROCESS BLDG ENLARGED PLAN/ELEVATIONS
H-2-833554-02	ARCHITECTURAL BIO PROCESS BLDG ENLARGED PLAN/SECTIONS
H-2-833555-01	STRUCTURAL BIO PROCESS BLDG FOUNDATION PLAN
H-2-833555-02	STRUCTURAL BIO PROCESS BLDG FOUNDATION PLAN AREA A
H-2-833555-03	STRUCTURAL BIO PROCESS BLDG FOUNDATION PLAN AREA B
H-2-833555-04	STRUCTURAL BIO PROCESS BLDG FOUNDATION PLAN AREA C
H-2-833555-05	STRUCTURAL BIO PROCESS BLDG SLAB SLOPE/SCREED PLAN
H-2-833555-06	STRUCTURAL BIO PROCESS BLDG CEILING SLAB FRAMING PLAN
H-2-833555-07	STRUCTURAL BIO PROCESS BLDG ROTARY DRUM MONORAIL
H-2-833555-08	STRUCTURAL BIO PROCESS BLDG CENTRIFUGE MONORAIL
H-2-833555-09	STRUCTURAL BIO PROCESS BLDG FOUNDATION DETAILS
H-2-833555-10	STRUCTURAL BIO PROCESS BLDG FOUNDATION DETAILS
H-2-833555-11	STRUCTURAL BIO PROCESS BLDG FOUNDATION DETAILS
H-2-833555-12	STRUCTURAL BIO PROCESS BLDG FOUNDATION DETAILS
H-2-833555-13	STRUCTURAL BIO PROCESS BLDG SECTIONS & DETAILS
H-2-833555-14	STRUCTURAL BIO PROCESS BLDG SECTIONS & DETAILS
H-2-833555-15	STRUCTURAL BIO PROCESS BLDG CHEMICAL STORAGE PLAN
H-2-833555-16	STRUCTURAL BIO PROCESS BLDG SECTIONS & DETAILS
H-2-833555-17	STRUCTURAL BIO PROCESS BLDG TANK ACCESS PLATFORM
H-2-833555-18	STRUCTURAL BIO PROCESS BLDG FOUNDATION DETAILS
H-2-833555-19	STRUCTURAL BIO PROCESS BLDG SECTIONS & DETAILS

DRAWING NUMBER	SHEET TITLE
H-2-833556-01	STRUCTURAL BIO PROCESS EQUIP PAD OVERALL FOUNDATION PLAN
H-2-833556-02	STRUCTURAL BIO PROCESS EQUIP PAD FOUNDATION PLAN AREA A
H-2-833556-03	STRUCTURAL BIO PROCESS EQUIP PAD FOUNDATION PLAN AREA B
H-2-833556-04	STRUCTURAL BIO PROCESS EQUIP PAD FOUNDATION PLAN AREA C
H-2-833556-05	STRUCTURAL BIO PROCESS EQUIP PAD SECTIONS & DETAILS
H-2-833556-06	STRUCTURAL BIO PROCESS EQUIP PAD SECTIONS & DETAILS
H-2-833556-07	STRUCTURAL BIO PROCESS EQUIP PAD SECTIONS & DETAILS
H-2-833556-08	STRUCTURAL BIO PROCESS EQUIP PAD SPLITTER BOX PLANS
H-2-833556-09	STRUCTURAL BIO PROCESS EQUIP PAD SPLITTER BOX SECTIONS
H-2-833556-10	STRUCTURAL BIO PROCESS EQUIP PAD SLUDGE/CENTRATE TANK PLATFORM
H-2-833556-11	STRUCTURAL BIO PROCESS EQUIP PAD AIR STRIPPER STAIR TOWER
H-2-833556-12	STRUCTURAL BIO PROCESS EQUIP PAD AIR STRIPPER STAIR TOWER
H-2-833556-13	STRUCTURAL BIO PROCESS EQUIP PAD AIR STRIPPER STAIR TOWER
H-2-833556-14	STRUCTURAL BIO PROCESS EQUIP PAD AIR STRIPPER STAIR TOWER
H-2-833556-15	STRUCTURAL BIO PROCESS EQUIP PAD MBR/SPLITTER ACCESS PLATFORM
H-2-833556-16	STRUCTURAL BIO PROCESS EQUIP PAD MBR/SPLITTER ACCESS PLATFORM
H-2-833556-17	STRUCTURAL BIO PROCESS EQUIP PAD FBR TANKS PLATFORM
H-2-833556-18	STRUCTURAL BIO PROCESS EQUIP PAD FBR TANKS PLATFORM
H-2-833556-19	STRUCTURAL BIO PROCESS EQUIP PAD BRIDGE CRANE FOUNDATION PLAN
H-2-833556-20	STRUCTURAL BIO PROCESS EQUIP PAD BRIDGE CRANE TOP PLAN
H-2-833556-21	STRUCTURAL BIO PROCESS EQUIP PAD BRIDGE CRANE DETAILS
H-2-833556-22	STRUCTURAL BIO PROCESS EQUIP PAD BRIDGE CRANE DETAILS
H-2-833556-23	STRUCTURAL BIO PROCESS EQUIP PAD INLET PIPE RACK
H-2-833556-24	STRUCTURAL BIO PROCESS EQUIP PAD INLET PIPE RACK
H-2-833556-25	STRUCTURAL BIO PROCESS EQUIP PAD INLET PIPE RACK
H-2-833556-26	STRUCTURAL BIO PROCESS EQUIP PAD INLET PIPE RACK
H-2-833556-27	STRUCTURAL BIO PROCESS EQUIP PAD INLET PIPE RACK
H-2-833556-28	STRUCTURAL BIO PROCESS EQUIP PAD VOG PIPE RACK
H-2-833556-29	STRUCTURAL BIO PROCESS EQUIP PAD VOG PIPE RACK
H-2-833556-30	STRUCTURAL BIO PROCESS EQUIP PAD VOG PIPE RACK DETAILS
H-2-833556-31	STRUCTURAL BIO PROCESS EQUIP PAD BRIDGE CRANE ACCESS
H-2-833556-32	STRUCTURAL BIO PROCESS EQUIP PAD BRIDGE CRANE ACCESS
H-2-833556-33	STRUCTURAL BIO PROCESS EQUIP PAD BRIDGE CRANE ACCESS
H-2-833556-34	RESERVED
H-2-833556-35	RESERVED
H-2-833556-36	STRUCTURAL BIO PROCESS EQUIP PAD FBR TANK AREA
H-2-833556-37	RESERVED
H-2-833556-38	RESERVED
H-2-833556-39	RESERVED
H-2-833556-40	STRUCTURAL BIO PROCESS BLDG OVERALL PIPE SUPPORT PLAN

DWG NO	TITLE
DRAWING TRACEABILITY LIST	

REF NUMBER	TITLE
NEXT USED ON	REFERENCES

NO	DESCRIPTION	DRW	CHK	DATE
5	REVISED PER ECR-14-001763	ZRW		10/8/14
4	REVISED PER ECR-13-000556	CAB	GGP	BLS 6/25/13 6/25/13

REVISIONS

	NAME	DATE
DRAWN	W. BOULOS	8/7/13
CHECKED	SK FELTON	8/7/13
DESIGN AUTHORITY	BL SASSER	8/7/13

U.S. DEPARTMENT OF ENERGY
Richland Operations Office

GENERAL INDEX OF DRAWINGS

SIZE	ACCT NO	PROJ NO	DWG NO	REV
D	200G	0000	H-2-833526	5

SCALE NONE | ACT DCN-200W-068 | SHEET 9 OF

XXXX PLOTID XXXX

DWG NO H-2-833526 SH 21 OF REV 0

DRAWING NUMBER	SHEET TITLE
H-2-833900-01	RESERVED
H-2-833901-01	RESERVED
H-2-833902-01	RESERVED
H-2-833903-01	RESERVED
H-2-833904-01	RESERVED
H-2-833905-01	RESERVED
H-2-833906-01	RESERVED
H-2-833907-01	RESERVED
H-2-833908-01	RESERVED
H-2-833909-01	RESERVED
H-2-833910-01	RESERVED
H-2-833911-01	RESERVED
H-2-833912-01	RESERVED
H-2-833913-01	RESERVED
H-2-833914-01	RESERVED
H-2-833915-01	RESERVED
H-2-833916-01	RESERVED
H-2-833917-01	RESERVED
H-2-833918-01	RESERVED
H-2-833919-01	RESERVED

DRAWING NUMBER	SHEET TITLE
H-2-833920-01	SUPERSEDED - GENERAL 200W PUMP & TREAT CONSTRUCTION DRAWING LIST
H-2-833921-01	CIVIL 200W PUMP & TREAT TRAILERS SITE PLAN
H-2-833922-01	ELECTRICAL 200W PUMP & TREAT ONE LINE DIAGRAM & DETAILS
H-2-833922-02	ELECTRICAL 200W PUMP & TREAT ONE LINE DIAGRAM & DETAILS
H-2-833922-03	ELECTRICAL 200W PUMP & TREAT ONE LINE DIAGRAM & DETAILS
H-2-833923-01	ELECTRICAL 200W PUMP & TREAT UTILITY POLE DETAILS
H-2-833923-02	ELECTRICAL 200W PUMP & TREAT PLANS & ELEVATIONS
H-2-833923-03	ELECTRICAL 200W PUMP & TREAT UTILITY POLE DETAILS
H-2-833923-04	ELECTRICAL 200W PUMP & TREAT SERVICE PLANS & ELEVATIONS
H-2-833923-05	ELECTRICAL 200W PUMP & TREAT PLANS & ELEVATIONS
H-2-833923-06	ELECTRICAL 200W PUMP & TREAT PLANS & ELEVATIONS
H-2-833923-07	ELECTRICAL 200W PUMP & TREAT PLANS & ELEVATIONS
H-2-833924-01	ELECTRICAL 200W PUMP & TREAT SITE UTILITY ROUTING PLAN
H-2-833924-02	ELECTRICAL 200W PUMP & TREAT SITE UTILITY ROUTING PLAN
H-2-833924-03	ELECTRICAL 200W PUMP & TREAT SITE UTILITY ROUTING PLAN
H-2-833925-01	VOID - ELECTRICAL 200W PUMP & TREAT INTERNAL POWER/COMM PLAN
H-2-833925-02	ELECTRICAL 200W PUMP & TREAT PANEL SCHEDULES
H-2-833925-03	VOID - ELECTRICAL 200W PUMP & TREAT RESTROOM TRAILER ROUTING PLAN
H-2-833925-04	ELECTRICAL 200W PUMP & TREAT INTERNAL POWER/COMM PLAN
H-2-833925-05	ELECTRICAL 200W PUMP & TREAT PANEL SCHEDULES
H-2-833925-06	VOID - ELECTRICAL 200W PUMP & TREAT RESTROOM TRAILER ROUTING PLAN
H-2-833925-07	VOID - ELECTRICAL 200W PUMP & TREAT INTERNAL POWER/COMM PLAN
H-2-833925-08	VOID - ELECTRICAL 200W PUMP & TREAT PANEL SCHEDULES
H-2-833925-09	VOID - ELECTRICAL 200W PUMP & TREAT INTERNAL POWER/COMM PLAN
H-2-833925-10	VOID - ELECTRICAL 200W PUMP & TREAT PANEL SCHEDULES
H-2-835497-01	ELECTRICAL 200W PUMP & TREAT POWER SITE PLAN
H-2-835498-01	ELECTRICAL 200W PUMP & TREAT POWER DETAILS
H-2-835498-02	ELECTRICAL 200W PUMP & TREAT POWER DETAILS
H-2-835498-03	ELECTRICAL 200W PUMP & TREAT POWER DETAILS
H-2-835499-01	ELECTRICAL 200W PUMP & TREAT ONE LINE DIAGRAM
H-2-835499-02	ELECTRICAL 200W PUMP & TREAT ONE LINE DIAGRAM
H-2-835499-03	ELECTRICAL 200W PUMP & TREAT PANEL SCHEDULES

DRAWING NUMBER	SHEET TITLE

DWG NO	TITLE	REF NUMBER	TITLE
DRAWING TRACEABILITY LIST		NEXT USED ON	REFERENCES

REV	DESCRIPTION	DATE	COMPLETED
0	INITIAL RELEASE PER ECR-13-000744		

REVISIONS

	NAME	DATE
DRAWN	CA BIRCHER	
CHECKED	S RENZ	
ENGINEER	BL SASSER	
PROJECT ENGINEER	CG BERGQUIST	
DESIGN AUTHORITY	BL SASSER	

U.S. DEPARTMENT OF ENERGY
Richland Operations Office

GENERAL INDEX OF DRAWINGS

SIZE D | BLDG NO 2000 | SYSTEM NO 0000 | DWG NO H-2-833526 | REV 0

SCALE NONE | TYPE ECR-13-000744 | SHEET 21

XXXX PLOTID XXXX

ECR-14-000762 Page 19
"WAS CONDITION"

DWG NO H-2-833526 SH 21 OF REV 0

DRAWING NUMBER	SHEET TITLE
H-2-833900-01	PFDS ERDF LEACHATE TRANSFER SYSTEM
H-2-833901-01A	P&IDS ERDF LEACHATE TRANSFER SYSTEM
H-2-833901-01B	P&IDS ERDF LEACHATE TRANSFER SYSTEM
H-2-833901-01C	P&IDS ERDF LEACHATE TRANSFER SYSTEM
H-2-833902-01	ELECTRICAL PLANS ELEVATIONS & WIRING
H-2-833903-01	CIVIL TRANSFER PIPE LINE PLAN & PROFILE
H-2-833903-02	CIVIL TRANSFER PIPE LINE PLAN & PROFILE
H-2-833903-03	CIVIL TRANSFER PIPE LINE DETAILS
H-2-833903-04	CIVIL TRANSFER PIPE LINE DETAILS
H-2-833903-05	NOT USED
H-2-833903-06	CIVIL TRANSFER PIPE GRADING PLAN & PROFILES
H-2-833903-07	CIVIL TRANSFER PIPE GRADING PLAN & PROFILES
H-2-833904-01	RESERVED
H-2-833905-01	RESERVED
H-2-833906-01	RESERVED
H-2-833907-01	RESERVED
H-2-833908-01	RESERVED
H-2-833909-01	RESERVED
H-2-833910-01	RESERVED
H-2-833911-01	RESERVED
H-2-833912-01	RESERVED
H-2-833913-01	RESERVED
H-2-833914-01	RESERVED
H-2-833915-01	RESERVED
H-2-833916-01	RESERVED
H-2-833917-01	RESERVED

DRAWING NUMBER	SHEET TITLE
H-2-833918-01	RESERVED
H-2-833919-01	RESERVED
H-2-833920-01	SUPERSEDED – GENERAL 200W PUMP & TREAT CONSTRUCTION DRAWING LIST
H-2-833921-01	CIVIL 200W PUMP & TREAT TRAILERS SITE PLAN
H-2-833922-01	ELECTRICAL 200W PUMP & TREAT ONE LINE DIAGRAM & DETAILS
H-2-833922-02	ELECTRICAL 200W PUMP & TREAT ONE LINE DIAGRAM & DETAILS
H-2-833922-03	ELECTRICAL 200W PUMP & TREAT ONE LINE DIAGRAM & DETAILS
H-2-833923-01	ELECTRICAL 200W PUMP & TREAT UTILITY POLE DETAILS
H-2-833923-02	ELECTRICAL 200W PUMP & TREAT PLANS & ELEVATIONS
H-2-833923-03	ELECTRICAL 200W PUMP & TREAT UTILITY POLE DETAILS
H-2-833923-04	ELECTRICAL 200W PUMP & TREAT SERVICE PLANS & ELEVATIONS
H-2-833923-05	ELECTRICAL 200W PUMP & TREAT PLANS & ELEVATIONS
H-2-833923-06	ELECTRICAL 200W PUMP & TREAT PLANS & ELEVATIONS
H-2-833923-07	ELECTRICAL 200W PUMP & TREAT PLANS & ELEVATIONS
H-2-833924-01	ELECTRICAL 200W PUMP & TREAT SITE UTILITY ROUTING PLAN
H-2-833924-02	ELECTRICAL 200W PUMP & TREAT SITE UTILITY ROUTING PLAN
H-2-833924-03	ELECTRICAL 200W PUMP & TREAT SITE UTILITY ROUTING PLAN
H-2-833925-01	VOID – ELECTRICAL 200W PUMP & TREAT INTERNAL POWER/COMM PLAN
H-2-833925-02	ELECTRICAL 200W PUMP & TREAT PANEL SCHEDULES
H-2-833925-03	VOID – ELECTRICAL 200W PUMP & TREAT RESTROOM TRAILER ROUTING PLAN
H-2-833925-04	ELECTRICAL 200W PUMP & TREAT INTERNAL POWER/COMM PLAN
H-2-833925-05	ELECTRICAL 200W PUMP & TREAT PANEL SCHEDULES
H-2-833925-06	VOID – ELECTRICAL 200W PUMP & TREAT RESTROOM TRAILER ROUTING PLAN
H-2-833925-07	VOID – ELECTRICAL 200W PUMP & TREAT INTERNAL POWER/COMM PLAN
H-2-833925-08	VOID – ELECTRICAL 200W PUMP & TREAT PANEL SCHEDULES
H-2-833925-09	VOID – ELECTRICAL 200W PUMP & TREAT INTERNAL POWER/COMM PLAN
H-2-833925-10	VOID – ELECTRICAL 200W PUMP & TREAT PANEL SCHEDULES
H-2-835497-01	ELECTRICAL 200W PUMP & TREAT POWER SITE PLAN
H-2-835498-01	ELECTRICAL 200W PUMP & TREAT POWER DETAILS
H-2-835498-02	ELECTRICAL 200W PUMP & TREAT POWER DETAILS
H-2-835498-03	ELECTRICAL 200W PUMP & TREAT POWER DETAILS
H-2-835499-01	ELECTRICAL 200W PUMP & TREAT ONE LINE DIAGRAM
H-2-835499-02	ELECTRICAL 200W PUMP & TREAT ONE LINE DIAGRAM
H-2-835499-03	ELECTRICAL 200W PUMP & TREAT PANEL SCHEDULES

DRAWING NUMBER	SHEET TITLE

DWG NO	TITLE	REF NUMBER	TITLE
DRAWING TRACEABILITY LIST		REFERENCES	
		NEXT USED ON	

REV NO	DATE	DESCRIPTION	BY	CHK	APPD	COMPANY
0		INITIAL RELEASE PER ECR-13-000744				

REVISIONS

	NAME	DATE
DRAWN BY	CA GIRCHER	DRAWING
CHECKED BY	RENZ	CHECK
DESIGN	BL SASSER	DESIGN
DESIGN AUTHORITY	GG BERGQUIST	APPROV
DESIGN AUTHORITY	BL BASSER	APPROV

U.S. DEPARTMENT OF ENERGY
Richland Operations Office

TITLE GENERAL INDEX OF DRAWINGS

SIZE D1 | BLDG NO 2000 | SYSTEM NO 0000 | DWG NO H-2-833526 | REV 0

SCALE NONE | ECN ECR-13-000744 | SHEET 21

XXXX PLOTID XXXX

ECR-14-000762 Page 26

NOTES:

SYSTEM NUMBERS ARE PREFIXED WITH "GRW-200W-" (IE GRW-200W-Y01)

SYSTEM IDENTIFICATION NUMBER

SYSTEM NO.	DESCRIPTION
SCADA	SCADA SYSTEM
Y	200 WEST PUMP AND TREAT FACITILY
YE	EXTRACTION WELL SYSTEMS
YE99	EXTRACTION WELL MANIFOLDS
YJ	INJECTION WELL SYSTEMS
Y00	TREATMENT BUILDING BALANCE OF PLANT
Y01	EXTRACTION TRANSFER BUILDING 1
Y02	EXTRACTION TRANSFER BUILDING 2 TANK 2
Y03	EXTRACTION TRANSFER BUILDING 2 TANK 3
Y04	EXTRACTION TRANSFER BUILDING 3 TANK 4
Y05	FIRE SYSTEM MECHANICAL
Y06	UTILITY WATER
Y07	INSTRUMENT AIR
Y08	RAD SHOP AIR SYSTEMS
Y09	BUILDING MECHANICAL
Y10	URANIUM SYSTEM INLET
Y11	URANIUM IX SYSTEM
Y12	ELECTRICAL POWER DISTRIBUTION
Y13	CRANE AND RIGGING
Y14	GENERAL
Y15	CIVIL, ARCHITECTURAL, AND STRUCTURAL
Y16	CODE COMPLIANCE
Y17	NOT USED
Y18	NOT USED
Y19	NOT USED
Y20	TC-99 SYSTEM INLET
Y21	TC-99 IX SYSTEM
Y22	UV SYSTEM
Y23	TC-99 RESIN STRIP TANK
Y24	HVAC
Y25	FIRE SYSTEM ELECTRICAL
Y26	SANITARY WATER
Y27	SULFURIC ACID TO TC-99 IX SYSTEM
Y28	NOT USED
Y29	NOT USED
Y30	EQUALIZATION TANK
Y31	NOT USED
Y32	NOT USED
Y33	NOT USED
Y34	NOT USED
Y35	NOT USED
Y36	NOT USED
Y37	NOT USED
Y38	NOT USED
Y39	NOT USED
Y40	RECYCLE TANK FBR FEED
Y41	FLUIDIZED BED REACTORS (FBR)
Y42	NOT USED
Y43	PHOSPHORIC ACID TO FBR SYSTEM
Y44	CARBON SUBSTRATE TO FBR SYSTEM
Y45	MICRONUTRIENT TO FBR SYSTEM
Y46	SODIUM NITRATE TO RECYCLE TANK
Y47	SULFURIC ACID TO FBR SYSTEM
Y48	NOT USED
Y49	AERATION MEMBRANE TANK SPLITTER STRUCTURE

SYSTEM NO.	DESCRIPTION
Y50	AERATION MEMBRANE TANKS
Y51	RETURN ACTIVATED SLUDGE (RAS)
Y52	WASTE ACTIVATED SLUDGE (WAS)
Y53	AERATION MEMBRANE TANK AIR BLOWERS
Y54	SODIUM HYPOCHLORITE TO AERATION MEMBRANE SYSTEM
Y55	CITRIC ACID TO AERATION MEMBRANE SYSTEM
Y56	SODIUM BISULFATE TO AERATION MEMBRANE SYSTEM
Y57	FERRIC CHLORIDE TO AERATION MEMBRANE SPLITTER BOX
Y58	SODIUM HYDROXIDE TO AERATION MEMBRANE SYSTEM
Y59	AERATION MEMBRANE SPLITTER BOX AIR
Y60	AIR STRIPPER AIR
Y61	AIR STRIPPER CLEANING RECIRCULATION
Y62	AIR STRIPPER VAPOR OFF GAS
Y63	AIR STRIPPER
Y64	ANTI-SCALANT TO AIR STRIPPER
Y65	NOT USED
Y66	NOT USED
Y67	NOT USED
Y68	NOT USED
Y69	NOT USED
Y70	ROTARY DRUM THICKENER
Y71	AERATED SLUDGE HOLDING TANKS
Y72	SLUDGE FEED AND CENTRIFUGE
Y73	SLUDGE STABILIZATION
Y74	SLUDGE STABILIZATION DELIVERY
Y75	SLUDGE STABILIZATION LOADOUT
Y76	CATIONIC POLYMER
Y77	SODIUM HYPOCHLORITE TO SLUDGE STABILIZATION CHEMICAL SCRUBBER
Y78	SULFURIC ACID TO SLUDGE STABILIZATION CHEMICAL SCRUBBER
Y79	SODIUM HYDROXIDE TO SLUDGE STABILIZATION CHEMICAL SCRUBBER
Y80	EFFLUENT TANK AND PUMPING
Y81	TREATED WATER SUPPLY
Y82	TREATED WATER FEED
Y83	TC-99 BACKWASH SUPPLY
Y84	URANIUM BACKWASH SUPPLY
Y85	SLUDGE STABILIZATION CHEMICAL SCRUBBER
Y86	SULFURIC ACID TO EFFLUENT TANK
Y87	TC-99 CLEAN RESIN HANDLING
Y88	URANIUM CLEAN RESIN HANDLING
Y89	SPENT RESIN HANDLING
Y90	INJECTION TRANSFER BUILDING 1
Y91	INJECTION TRANSFER BUILDING 2
Y92	INJECTION MANIFOLD BUILDING 216ZP1A
Y93	CENTRATE SUMP
Y94	SOLIDS RECYCLE SUMP
Y95	AERATED CENTRATE HOLDING TANKS
Y96	SLUDGE TANK / CENTRATE TANK BLOWERS
Y97	LIME SYSTEM
Y98	BIO PROCESS BUILDING SUMPS
Y99	RAD BUILDING SUMPS

ECR-14-000762 Page 21
"WAS CONDITION"

DWG NO	TITLE
DRAWING TRACEABILITY LIST	

REF NUMBER	TITLE
H-2-833526	INDEX OF DRAWINGS
REFERENCES	
NEXT USED ON	

REV	DESCRIPTION	DRAWN	CHKD	APPROVED
3	REVISED PER DCN-200W-041	JED 8/10/12	BLS 8/15/12	SRW 8/20/12

REVISIONS

NAME	DATE
W. KRISTEK	8/17/12
G. DAVIS	8/17/12
G. DAVIS	8/17/12
J. GASSER	8/17/12
R. HANKS	8/17/12
SAMBO	8/17/12

U.S. DEPARTMENT OF ENERGY
Richland Operations Office

GENERAL
I&C LEGEND
SYSTEM ID NUMBERS

SIZE	SCALE	DWG NO	REV
D	NONE	H-2-833534	3

XXXX PLOTID XXXX

NOTES:

SYSTEM NUMBERS ARE PREFIXED WITH "GRW-200W-"
(IE GRW-200W-Y01)

SYSTEM IDENTIFICATION NUMBER

SYSTEM NO.	DESCRIPTION
SCADA	SCADA SYSTEM
Y	200 WEST PUMP AND TREAT FACITLIY
YE	EXTRACTION WELL SYSTEMS
YE99	EXTRACTION WELL MANIFOLDS
YJ	INJECTION WELL SYSTEMS
Y00	TREATMENT BUILDING BALANCE OF PLANT
Y01	EXTRACTION TRANSFER BUILDING 1
Y02	EXTRACTION TRANSFER BUILDING 2 TANK 2
Y03	EXTRACTION TRANSFER BUILDING 2 TANK 3
Y04	EXTRACTION TRANSFER BUILDING 3 TANK 4
Y05	FIRE SYSTEM MECHANICAL
Y06	UTILITY WATER
Y07	INSTRUMENT AIR
Y08	RAD SHOP AIR SYSTEMS
Y09	BUILDING MECHANICAL
Y10	URANIUM SYSTEM INLET
Y11	URANIUM IX SYSTEM
Y12	ELECTRICAL POWER DISTRIBUTION
Y13	CRANE AND RIGGING
Y14	GENERAL
Y15	CIVIL, ARCHITECTURAL, AND STRUCTURAL
Y16	CODE COMPLIANCE
Y17	ERDF LEACHATE TRANSFER SYSTEM
Y18	NOT USED
Y19	NOT USED
Y20	TC-99 SYSTEM INLET
Y21	TC-99 IX SYSTEM
Y22	UV SYSTEM
Y23	TC-99 RESIN STRIP TANK
Y24	HVAC
Y25	FIRE SYSTEM ELECTRICAL
Y26	SANITARY WATER
Y27	SULFURIC ACID TO TC-99 IX SYSTEM
Y28	NOT USED
Y29	NOT USED
Y30	EQUALIZATION TANK
Y31	NOT USED
Y32	NOT USED
Y33	NOT USED
Y34	NOT USED
Y35	NOT USED
Y36	NOT USED
Y37	NOT USED
Y38	NOT USED
Y39	NOT USED
Y40	RECYCLE TANK FBR FEED
Y41	FLUIDIZED BED REACTORS (FBR)
Y42	NOT USED
Y43	PHOSPHORIC ACID TO FBR SYSTEM
Y44	CARBON SUBSTRATE TO FBR SYSTEM
Y45	MICRONUTRIENT TO FBR SYSTEM
Y46	SODIUM NITRATE TO RECYCLE TANK
Y47	SULFURIC ACID TO FBR SYSTEM
Y48	NOT USED
Y49	AERATION MEMBRANE TANK SPLITTER STRUCTURE

SYSTEM NO.	DESCRIPTION
Y50	AERATION MEMBRANE TANKS
Y51	RETURN ACTIVATED SLUDGE (RAS)
Y52	WASTE ACTIVATED SLUDGE (WAS)
Y53	AERATION MEMBRANE TANK AIR BLOWERS
Y54	SODIUM HYPOCHLORITE TO AERATION MEMBRANE SYSTEM
Y55	CITRIC ACID TO AERATION MEMBRANE SYSTEM
Y56	SODIUM BISULFATE TO AERATION MEMBRANE SYSTEM
Y57	FERRIC CHLORIDE TO AERATION MEMBRANE SPLITTER BOX
Y58	SODIUM HYDROXIDE TO AERATION MEMBRANE SYSTEM
Y59	AERATION MEMBRANE SPLITTER BOX AIR
Y60	AIR STRIPPER AIR
Y61	AIR STRIPPER CLEANING RECIRCULATION
Y62	AIR STRIPPER VAPOR OFF GAS
Y63	AIR STRIPPER
Y64	ANTI-SCALANT TO AIR STRIPPER
Y65	NOT USED
Y66	NOT USED
Y67	NOT USED
Y68	NOT USED
Y69	NOT USED
Y70	ROTARY DRUM THICKENER
Y71	AERATED SLUDGE HOLDING TANKS
Y72	SLUDGE FEED AND CENTRIFUGE
Y73	SLUDGE STABILIZATION
Y74	SLUDGE STABILIZATION DELIVERY
Y75	SLUDGE STABILIZATION LOADOUT
Y76	CATIONIC POLYMER
Y77	SODIUM HYPOCHLORITE TO SLUDGE STABILIZATION CHEMICAL SCRUBBER
Y78	SULFURIC ACID TO SLUDGE STABILIZATION CHEMICAL SCRUBBER
Y79	SODIUM HYDROXIDE TO SLUDGE STABILIZATION CHEMICAL SCRUBBER
Y80	EFFLUENT TANK AND PUMPING
Y81	TREATED WATER SUPPLY
Y82	TREATED WATER FEED
Y83	TC-99 BACKWASH SUPPLY
Y84	URANIUM BACKWASH SUPPLY
Y85	SLUDGE STABILIZATION CHEMICAL SCRUBBER
Y86	SULFURIC ACID TO EFFLUENT TANK
Y87	TC-99 CLEAN RESIN HANDLING
Y88	URANIUM CLEAN RESIN HANDLING
Y89	SPENT RESIN HANDLING
Y90	INJECTION TRANSFER BUILDING 1
Y91	INJECTION TRANSFER BUILDING 2
Y92	INJECTION MANIFOLD BUILDING 216ZP1A
Y93	CENTRATE SUMP
Y94	SOLIDS RECYCLE SUMP
Y95	AERATED CENTRATE HOLDING TANKS
Y96	SLUDGE TANK / CENTRATE TANK BLOWERS
Y97	LIME SYSTEM
Y98	BIO PROCESS BUILDING SUMPS
Y99	RAD BUILDING SUMPS

DWG NO	TITLE
DRAWING TRACEABILITY LIST	

REF NUMBER	TITLE
H-2-833526	INDEX OF DRAWINGS
REFERENCES	
NEXT USED ON	

REV NO	DESCRIPTION	DATE	CHECKED
3	REVISED PER DCN-200W-841	JED 9/10/12	GLS 9/25/12 ISPW

REVISIONS

	NAME	DATE
DRAWN BY	E. KRISTER	4/17/12
CHECKED BY	G. DAVIS	4/17/12
APPROVED BY	G. DAVIS	4/17/12
REV PROJ ENGR	E. SASSER	4/17/12
REV PROJ MGR	R. HANKS	4/17/12
CERTIFICATION REQUIRED BY	RCRA	

U.S. DEPARTMENT OF ENERGY
Richland Operations Office

GENERAL
I&C LEGEND
SYSTEM ID NUMBERS

SIZE	LTR SYM	PROJ NO	DWG NO	REV
D	200W	9503	H-2-833534	3

SCALE NONE UNIT DCN-200W-030 SHEET 3 OF

XXXX PLOTID XXXX

REFERENCE DRAWING H–2–833535 SHEET 1 | REV 9 | FMP Section Number | DWG SKETCH | SHEET 1 OF 1

IS:

ADD SERVICE TO PIPE SCHEDULE

SERVICE	FLOW STREAM	SIZE, INCHES (NOTE 1)	INSTALLATION (NOTE 2)	MATERIAL (NOTE 3)	SPECIFICATION SECTION	JOINT TYPE (NOTE 4)	LINING/COATING (NOTE 5)	INSULATION (Y/N) (NOTE 8)	HEAT TRACE (Y/N) (NOTE 7)	PIPE LABEL COLOR	LETTER COLOR	DESIGN PRESSURE (PSI)	TEST PRESSURE AND TYPE (NOTE 6)	FLUID SERVICE (ASME 31.3) (NOTE 9)	REMARKS
LEACHATE	LE	ALL	IN EXP	PVC	40 27 00.10	SW, FL	NONE	N	N	TBD	TBD	100	150, H	CATEGORY D	
LEACHATE	LE	ALL	OUT EXP	PIP (HDPE)	40 27 01	BF, FL	NONE	Y	Y	TBD	TBD	100	I	CATEGORY D	
LEACHATE	LE	ALL	OUT EXP	DIP (CLDI)	40 27 00.01	ME, FL	CL	N	N	TBD	TBD	100	150, H	CATEGORY D	LOCATED PRIMARILY IN CMP MANHOLE BUT PARTIALLY BURIED OUTSIDE MH–2WPT–1
LEACHATE	LE	ALL	BUR	HDPE	33 05 01.10	BF, FL	NONE	N	N	TBD	TBD	100	I	CATEGORY D	

ADD TO NOTE 3

BF: BUTT FUSION WELDED
CLDI: CEMENT–LINED DUCTILE IRON PIPE (DIP)
ME: MECHANICAL
PIP: PRE–INSULATED PIPE

ADD TO NOTE 7

7. PVC PIPE SHALL BE HEAT TRACED AND INSULATED FROM METAL BUILDING PENETRATION OUTSIDE TO THE PIPE SUPPORT ANCHOR. REFER TO DRAWINGS AND SPECIFICATIONS FOR DETAILS. SEE ~~SPECIFICATION 40 05 33 – PIPE HEAT TRACING~~ AND TANK HEATERS FOR REQUIREMENTS. FOR OTHER PIPING REFER TO THE DRAWINGS.

DWG NO H-2-833540 SH 1 OF 11 REV 1

BF-Y10A, -Y10B
URANIUM CARTRIDGE
FILTER
50 GPM EACH

USIT-Y10
URANIUM SYSTEM
INLET TANK
(FUTURE)

OGD-Y62D10
OFF GAS DEMISTER
10 SCFM

UISP-Y10A, -Y10B
URANIUM INLET
SUPPLY PUMP
(FUTURE)

UC-Y11A1
URANIUM IX
COLUMN A
50 GPM

UC-Y11A2
URANIUM IX
COLUMN B
50 GPM

UC-Y11A3
URANIUM IX
COLUMN C
50 GPM

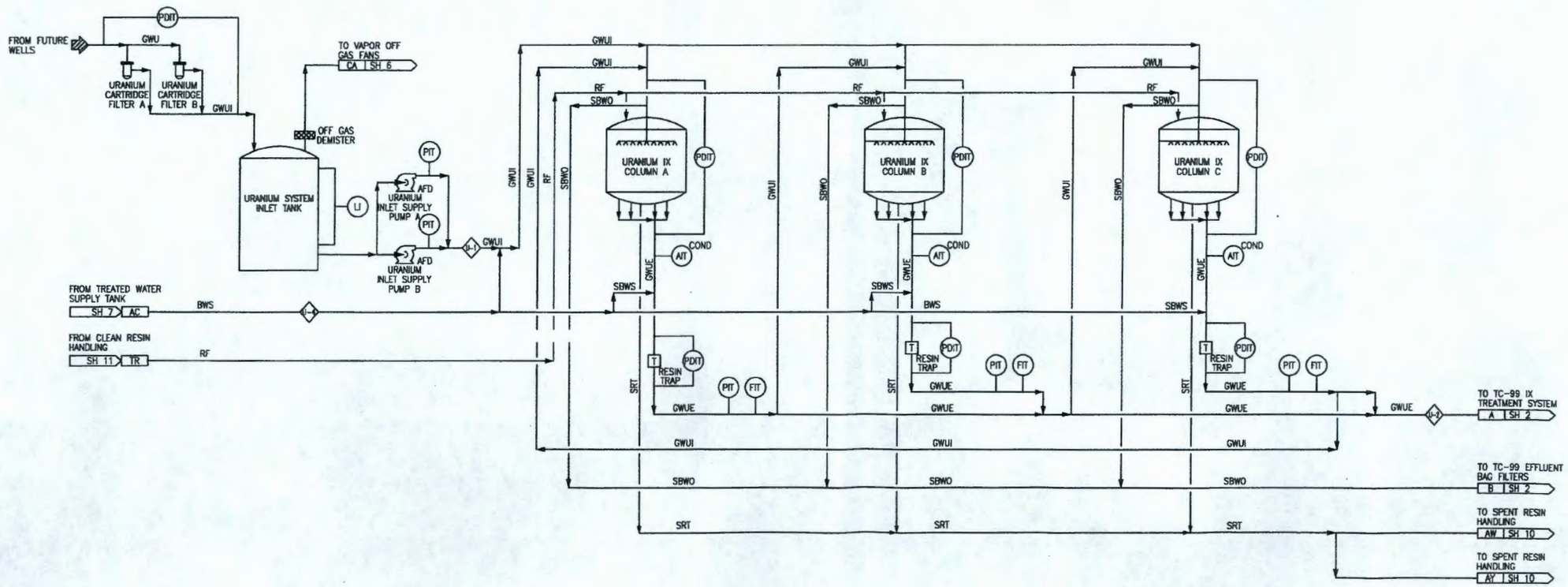

DWG NO	TITLE
DRAWING TRACEABILITY LIST	

REF NUMBER	TITLE
H-2-833526	INDEX OF DRAWINGS
REFERENCES	
NEXT USED ON	

REV NO	DESCRIPTION	REV BY	DATE	COMPANY
1	REVISED PER DCN-280W-290 & RLD-200W-012R	WBM 2/2/12	RCS 1/23/12	WMB 1/23/12
0	INITIAL RELEASE PER DCN-200W-030			

REVISIONS

	NAME	DATE	COMPANY
DESIGN AGENCY	E. KRISTEL	6/17/99	CH
DESIGN AGENCY	G. DAVIS	6/17/99	CH
DESIGN AGENCY	G. DAVIS	6/17/99	CH
DESIGN AGENCY	R. SASSER	6/17/99	CH
DESIGN AGENCY	R. HANKS	6/17/99	CH
DESIGN AUTHORITY	RJMBG	6/22/99	CH

U.S. DEPARTMENT OF ENERGY
Richland Operations Office

TITLE
PFDS
RAD BLDG
URANIUM IX SYSTEM

SIZE	BLDG NO	MODEL NO	DWG NO	REV
D	269TA	7000	H-2-833540	1

SCALE NONE REF DCN-280W-030 SHEET 1 OF 11

XXXX PLOTID XXXX

ECR-14-000762 Page 24
"WAS CONDITIONED"

DWG NO H-2-833540 SH 1 OF 11 REV 1

BF-Y10A, -Y10B
URANIUM CARTRIDGE
FILTER
50 GPM EACH

USIT-Y10
URANIUM SYSTEM
INLET TANK
(FUTURE)

UISP-Y10A, -Y10B
URANIUM INLET
SUPPLY PUMP
(FUTURE)

OGD-Y62D10
OFF GAS DEMISTER
10 SCFM

UC-Y11A1
URANIUM IX
COLUMN A
50 GPM

UC-Y11A2
URANIUM IX
COLUMN B
50 GPM

UC-Y11A3
URANIUM IX
COLUMN C
50 GPM

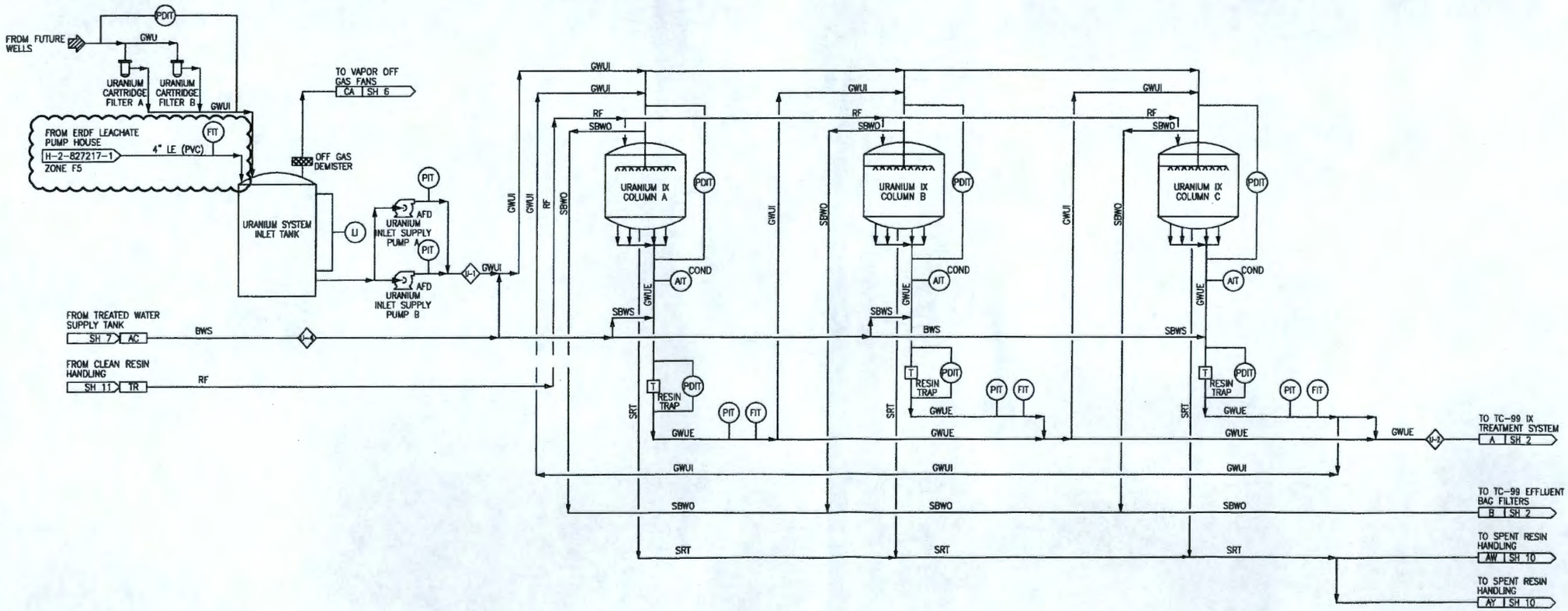

DWG NO	TITLE
DRAWING TRACEABILITY LIST	

REF NUMBER	TITLE
H-2-833526	INDEX OF DRAWINGS
REFERENCES	
NEXT USED ON	

REV	DESCRIPTION	DRAWN	CHECKED	ENGINEERING	CHECKED	DRAWING
1	REVISED PER DCN-200W-290 & NLD-200W-0128	WBM 2/8/12	DCS 4/19/12	WMB 4/9/12		
0	INITIAL RELEASE PER DCN-200W-030					

REVISIONS

	NAME	DATE
DRAWN BY	P. KRISTEK	4/17/12
ENGINEER	G. DAVIS	4/17/12
CHECKED	G. DAVIS	4/17/12
ENGINEER	D. SISSER	4/17/12
CHECKED	R. HANKS	4/17/12
PROJECT ENGINEER	RAMBO	4/23/12

U.S. DEPARTMENT OF ENERGY
Richland Operations Office

PFDS
RAD BLDG
URANIUM IX SYSTEM

SIZE D | CODE IDENT 28GTA | DRAWING NO 7000 | DWG NO H-2-833540 | REV 1
SCALE NONE | REF DCN-200W-030 | SHEET 1 OF 11

XXXX PLOTID XXXX

ECR-14-000762 Page 25

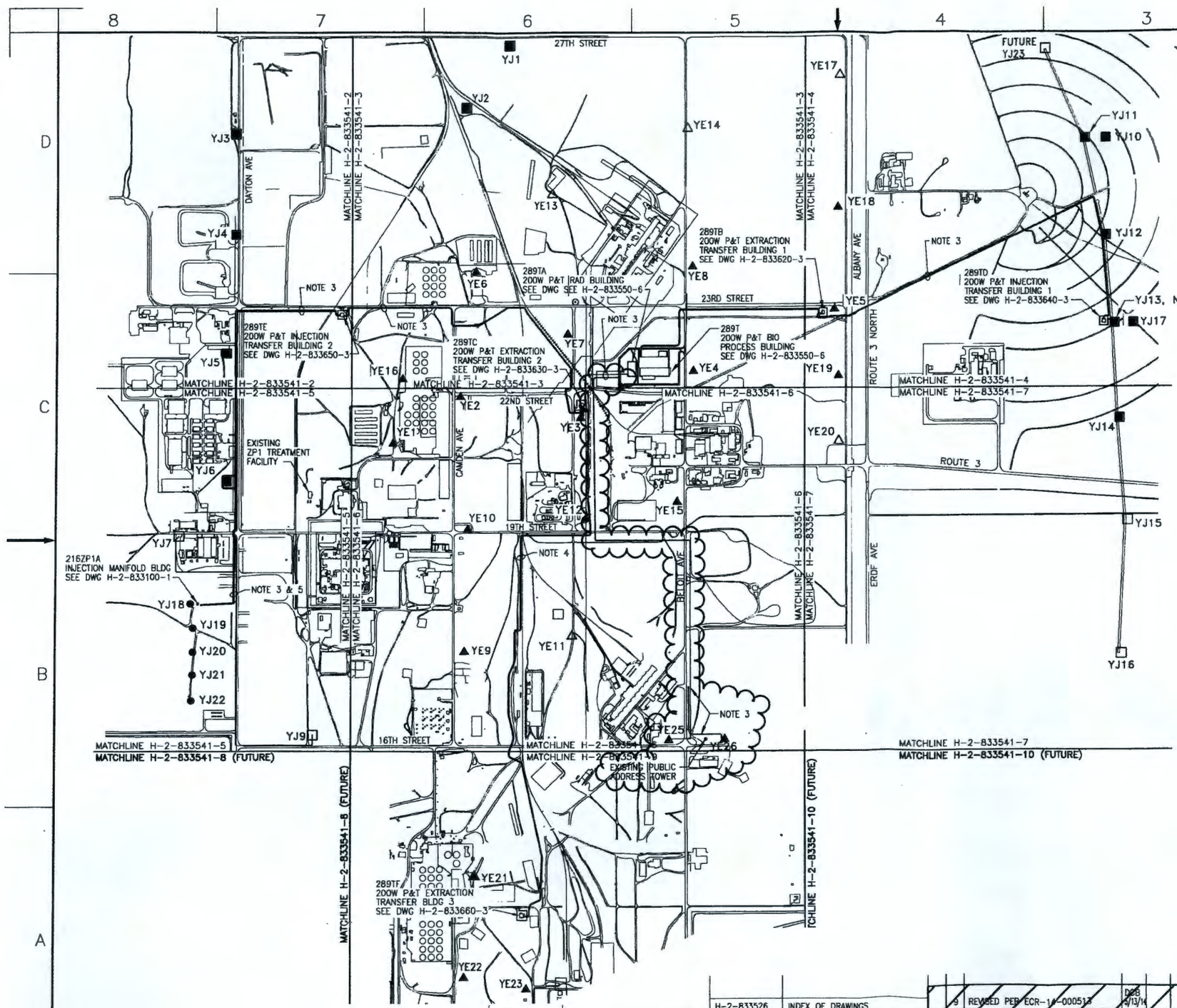

DWG NO H-2-833541 SH 1 OF REV 9

600 400 200 0 600 1200 1800
100 FEET

GENERAL NOTES:

1. ROAD CROSSING – FIBER OPTIC THAT SHARE A ROAD CROSSING SLEEVE WITH HDPE PIPING, PROVIDE ADDITIONAL FIBER PROTECTION WITH 3/4" PVC PIPING.
2. FOR ROAD CROSSING SLEEVE DATA SEE H-2-833610 SHEETS 2-9.
3. 6 STRAND MULTI MODE FIBER OPTIC CABLE.
4. 6 STRAND SINGLE MODE FIBER OPTIC CABLE.
5. FIBER OPTIC INSTALLED UNDER GROUND.
6. FUTURE NOTE
7. FUTURE NOTE
8. DRILLED – NOT IN USE.

LEGEND

- EXISTING INJECTION WELL

PHASE I WELLS
- EXTRACTION WELL
- EXTRACTION PIPING CORRIDOR
- INJECTION
- INJECTION PIPING CORRIDOR
- ROAD CROSSING
- RAILROAD CROSSING

PHASE II WELLS
- EXTRACTION WELL
- EXTRACTION PIPING CORRIDOR
- INJECTION WELL
- INJECTION PIPING CORRIDOR
- PIPING (FUTURE)
- ROAD CROSSING

KEY MAP

2	3	4
5	6	7
8	9	10

BLDG. NO.
289T
289TA
289TB
289TC
289TD
289TE
216ZP1A

INDEX NO. 5901

THIS SPACE RESERVED FOR BUILDING AND INDEX NUMBERS

DRAWING TRACEABILITY LIST			
H-1-91103	ROAD CROSSING DETAILS	H-2-833526	INDEX OF DRAWINGS
DWG NO	TITLE	REF NUMBER	TITLE
		REFERENCES	
		NEXT USED ON	

REV NO	DESCRIPTION	DATE	COMPANY
9	REVISED PER ECR-14-000513	3/13/14	

REVISIONS

NAME	DATE
WB MONROE	2/16/11
SR WILCOX	2/22/11
SR WILCOX	2/22/11
RL SASSER	2/22/11
GV DELISLE	2/22/11
RA HANKS	2/22/11

U.S. DEPARTMENT OF ENERGY
Richland Operations Office

CONTROL SYSTEM
FIBER OPTIC ROUTING
PLAN

SIZE	BLDG NO	SHEET NO	DWG NO	REV
D	SEE LIST	SEE LIST	H-2-833541	9

SCALE 1"=600' SYM DCN-200W-225 SHEET 1 OF

XXXX PLOTD XXXX

ECR-14-000762 Page 24
"WAS CONDITION" (PER ECR-14-000513)

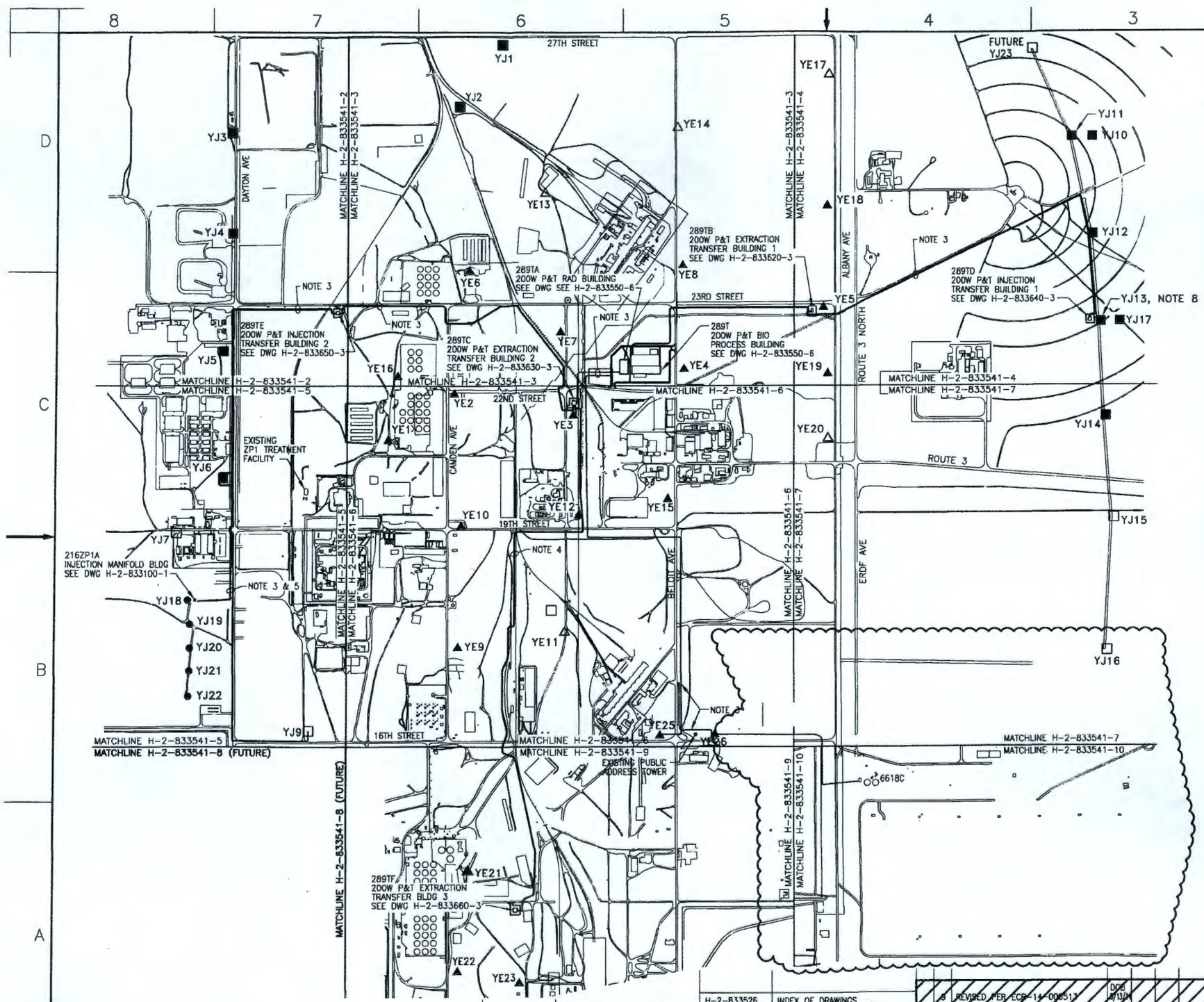

600 400 200 0 600 1200 1800
100 FEET

GENERAL NOTES:

1. ROAD CROSSING – FIBER OPTIC THAT SHARE A ROAD CROSSING SLEEVE WITH HDPE PIPING, PROVIDE ADDITIONAL FIBER PROTECTION WITH 3/4" PVC PIPING.
2. FOR ROAD CROSSING SLEEVE DATA SEE H-2-833610 SHEETS 2-9.
3. 6 STRAND MULTI MODE FIBER OPTIC CABLE.
4. 6 STRAND SINGLE MODE FIBER OPTIC CABLE.
5. FIBER OPTIC INSTALLED UNDER GROUND.
6. FUTURE NOTE
7. FUTURE NOTE
8. DRILLED – NOT IN USE.

LEGEND

- EXISTING INJECTION WELL

PHASE I WELLS

- EXTRACTION WELL
- EXTRACTION PIPING CORRIDOR
- INJECTION
- INJECTION PIPING CORRIDOR
- ROAD CROSSING
- RAILROAD CROSSING

PHASE II WELLS

- EXTRACTION WELL
- EXTRACTION PIPING CORRIDOR
- INJECTION WELL
- INJECTION PIPING CORRIDOR
- PIPING (FUTURE)
- ROAD CROSSING

KEY MAP

2	3	4
5	6	7
8	9	10

BLDG. NO.
289T
289TA
289TB
289TC
289TD
289TE
~~216ZP1A~~
6618C

INDEX NO. 5901

THIS SPACE RESERVED FOR BUILDING AND INDEX NUMBERS

DRAWING TRACEABILITY LIST			
DWG NO	TITLE	REF NUMBER	TITLE
H-1-91103	ROAD CROSSING DETAILS	H-2-833526	INDEX OF DRAWINGS
		REFERENCES	
		NEXT USED ON	

REVISIONS			
9	REVISED PER ECR-14-000513	DCB 8/13/14	

NAME	DATE
WB MONROE	7/15/11
SR WILCOX	7/15/11
SR WILCOX	7/15/11
JP BASSER	7/15/11
GV DELISLE	7/15/11
SCALE AUTHORITY SA HANKS	7/15/11

U.S. DEPARTMENT OF ENERGY
Richland Operations Office

CONTROL SYSTEM FIBER OPTIC ROUTING PLAN

SIZE	BLDG NO	INDEX NO	DWG NO	REV
D	SEE LIST	SEE LIST	H-2-833541	9
SCALE 1"=600'		DCN-200W-225	SHEET 1 OF	

XXXX PLOTTED XXXX

ECR-14-000762 Page 27

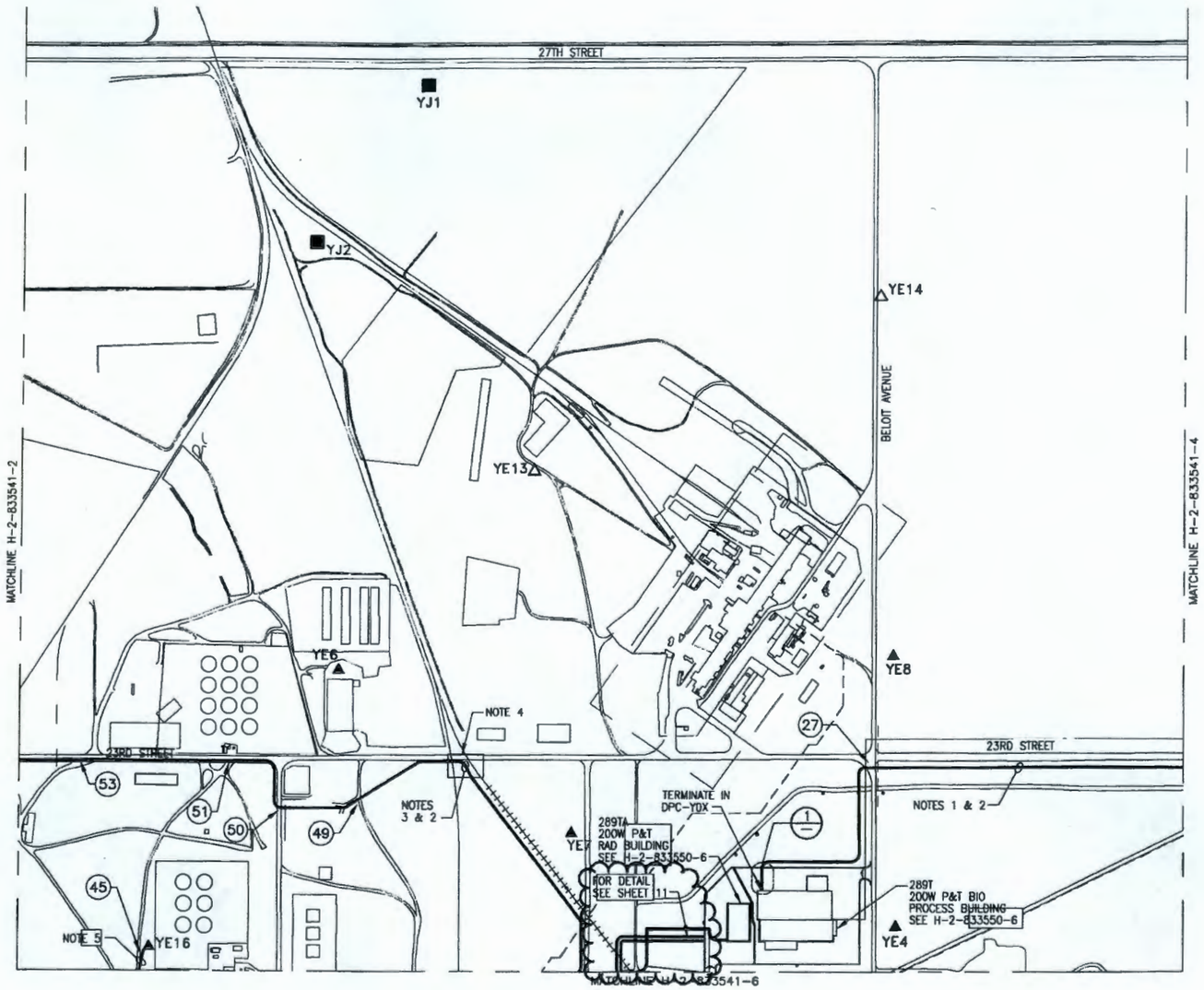

N

300 200 100 0 300 600 900
FEET

NOTES:

1. ARMORED, 6 FIBER, 50um, MULTI MODE FIBER OPTIC CABLE, CORNING P/N 006T8F-31131-A1 OR EQUIVALENT. APPROXIMATE LENGTH = 3000 FT. CABLE. FOLLOW DETAIL 1 AT BIO PAD PIPING DUCT BANK. PULL FIBER OPTIC CABLE IN NEW 2" UNDERGROUND CONDUIT. INSTALL CONDUIT IN TRENCH PER SPECIFICATION 31 23 23.15.
2. FIBER OPTIC CABLE ALONG SIDE THE SAME PATH AS EXISTING HDPE PIPING. 1-2 FOOT SEPARATION FROM PIPING.
3. ARMORED, 6 FIBER, 50um MULTIMODE FIBER OPTIC CABLE, CORNING P/N 006T8F-31131-A1 OR EQUIVALENT, APPROXIMATE LENGTH = 4500 FT.
4. FIBER OPTIC CABLE FROM BUILDING 289TE TO FOLLOW HDPE PIPING TO THE JUNCTION OF HDPE PIPING FROM YE6. FIBER OPTIC CABLE THEN FOLLOWS YE6 HDPE PIPING TO BUILDING 289TC.
5. ARMORED FIBER OPTIC CABLE BETWEEN DPC-YE01 & DPC-YE16.
6. SEE GENERAL NOTES SHEET 1.

LEGEND

SEE SHEET 1

KEY MAP

2	3	4
5	6	7
8	9	10

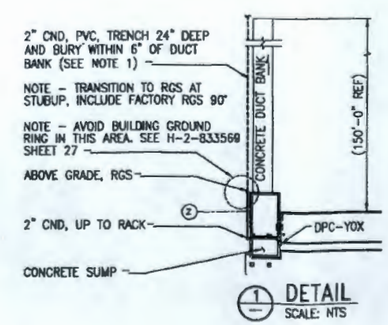

1 DETAIL
SCALE: NTS

DWG NO	TITLE	REF NUMBER	TITLE
H-1-91103	ROAD CROSSING DETAILS	H-2-833526	INDEX OF DRAWINGS
DRAWING TRACEABILITY LIST		REFERENCES	
		NEXT USED ON	

REV	DESCRIPTION	DRAWN	CHECKED	DATE
6	REVISED PER ECR-14-000513	BCB		5/5/14
5	REVISED PER DEN-200W-279 (PREVIOUSLY DWG SHEET 5)	KKB	BLS SW	7/25/07 8/1/02

REVISIONS

	NAME	DATE
DRAWN BY	RC ANGER	4/1/11
CHECKED BY	GV DEJISLI	4/25/11
PROJECT ENGR	J CROW	4/25/11
DESIGN AUTHORITY	JR WILCOX	4/25/11
DESIGN AUTHORITY	PX HANKS	

U.S. DEPARTMENT OF ENERGY
Richland Operations Office

CONTROL SYSTEM
FIBER OPTIC ROUTING
PLAN

SIZE D | BLDG NO 289T 289TA | DRAWING NO 5901 | SHEET NO H-2-833541 | REV 6
SCALE 1"=300' | DCN 200W-244

ECR-14-000762 Page 28
"WAS CONDITION" (PER ECR-14-000513)

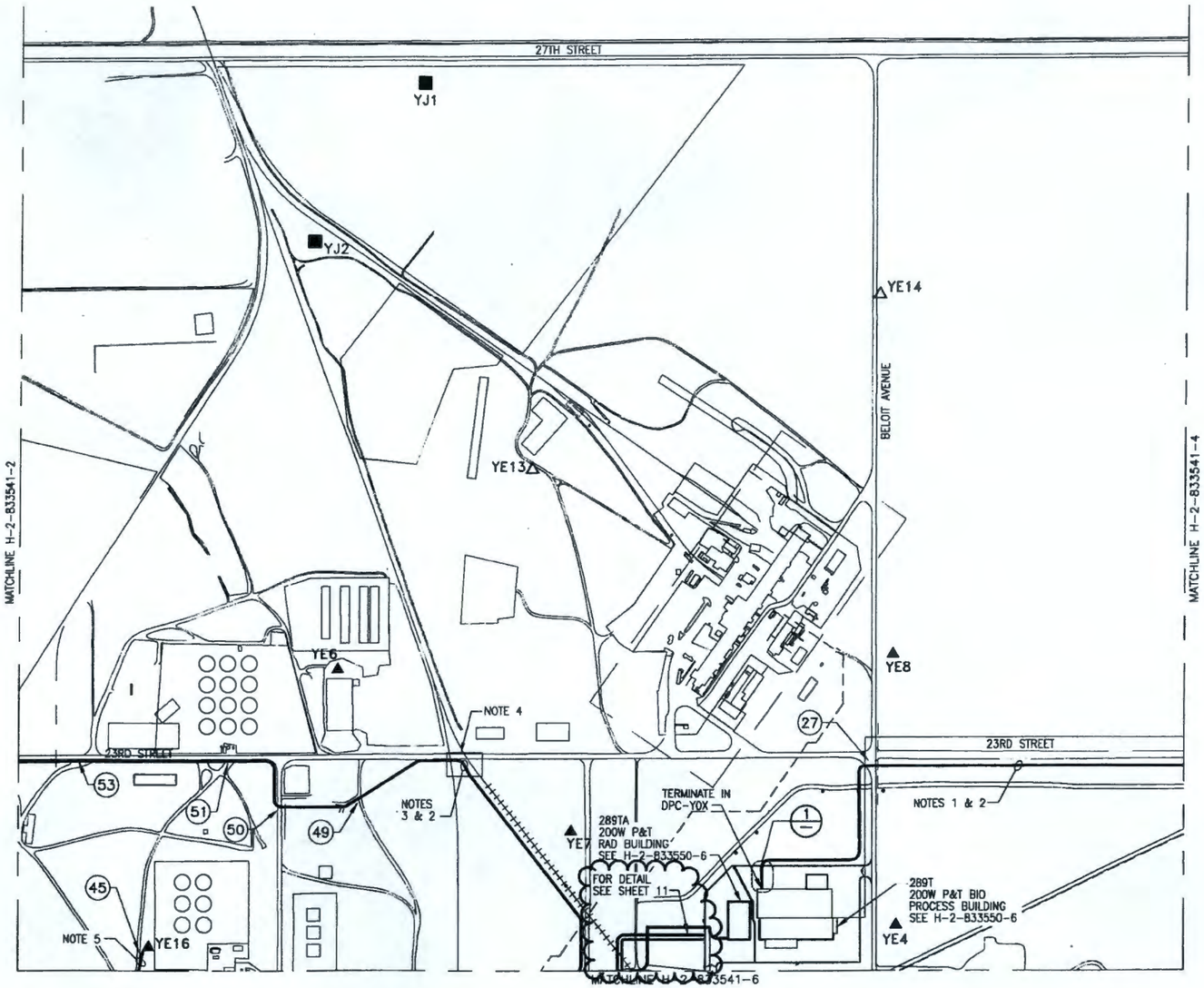

N

300 200 100 0 300 600 900
FEET

NOTES:

1. ARMORED, 6 FIBER, 50um, MULTI MODE FIBER OPTIC CABLE, CORNING P/N 006T8F-31131-A1 OR EQUIVALENT. APPROXIMATE LENGTH = 3000 FT. CABLE. FOLLOW DETAIL 1 AT BIO PAD PIPING DUCT BANK. PULL FIBER OPTIC CABLE IN NEW 2" UNDERGROUND CONDUIT. INSTALL CONDUIT IN TRENCH PER SPECIFICATION 31 23 23.15.
2. FIBER OPTIC CABLE ALONG SIDE THE SAME PATH AS EXISTING HDPE PIPING. 1-2 FOOT SEPARATION FROM PIPING.
3. ARMORED, 6 FIBER, 50um MULTIMODE FIBER OPTIC CABLE, CORNING P/N 006T8F-31131-A1 OR EQUIVALENT, APPROXIMATE LENGTH = 4500 FT.
4. FIBER OPTIC CABLE FROM BUILDING 289TE TO FOLLOW HDPE PIPING TO THE JUNCTION OF HDPE PIPING FROM YE6. FIBER OPTIC CABLE THEN FOLLOWS YE6 HDPE PIPING TO BUILDING 289TC.
5. ARMORED FIBER OPTIC CABLE BETWEEN DPC-YE01 & DPC-YE16.
6. SEE GENERAL NOTES SHEET 1.

LEGEND

SEE SHEET 1

KEY MAP

2	3	4
5	6	7
8	9	10

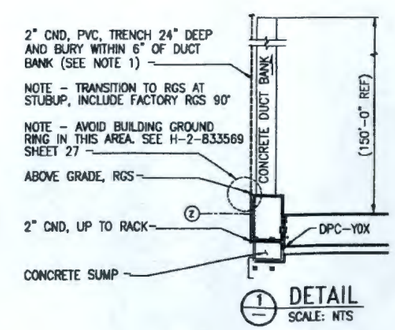

DWG NO	TITLE	REFERENCES	
H-1-91103	ROAD CROSSING DETAILS	H-2-833526	INDEX OF DRAWINGS
		REF NUMBER	TITLE
DRAWING TRACEABILITY LIST		NEXT USED ON	

REV	DATE	DESCRIPTION	REV BY	CHK BY	ENGR	CHAPMAN
6		REVISED PER ECR-14-000513	BCB 5/30/14			
5		REVISED PER DCN-2DOW-279 (PREVIOUSLY DWG SHEET 5)	KKB 8/4/12	BLS 7/8/09	SM 7/8/09	

REVISIONS

	NAME	DATE	COMPANY
DRAWN BY	K. ANGEN	4/4/11	GH
CHK	GW DEJISLE	4/8/11	GH
2ND CHK	J. BROW	4/8/11	GH
PROJ ENGR	SR WILCOX	4/8/11	GH
DESIGN AUTHORITY	RA HANKS	4/8/11	GH

U.S. DEPARTMENT OF ENERGY
Richland Operations Office

TITLE: CONTROL SYSTEM FIBER OPTIC ROUTING PLAN

SIZE D | BLDG NO 289T 289TA | PROJECT NO F901 | DWG NO H-2-833541 | REV 6

SCALE 1/2=300' | ACCT DCN-2DOW-244 | SHEET 3 OF

DOE_TB_D.DWG (01-01)

ECR-14-000762 Page 24

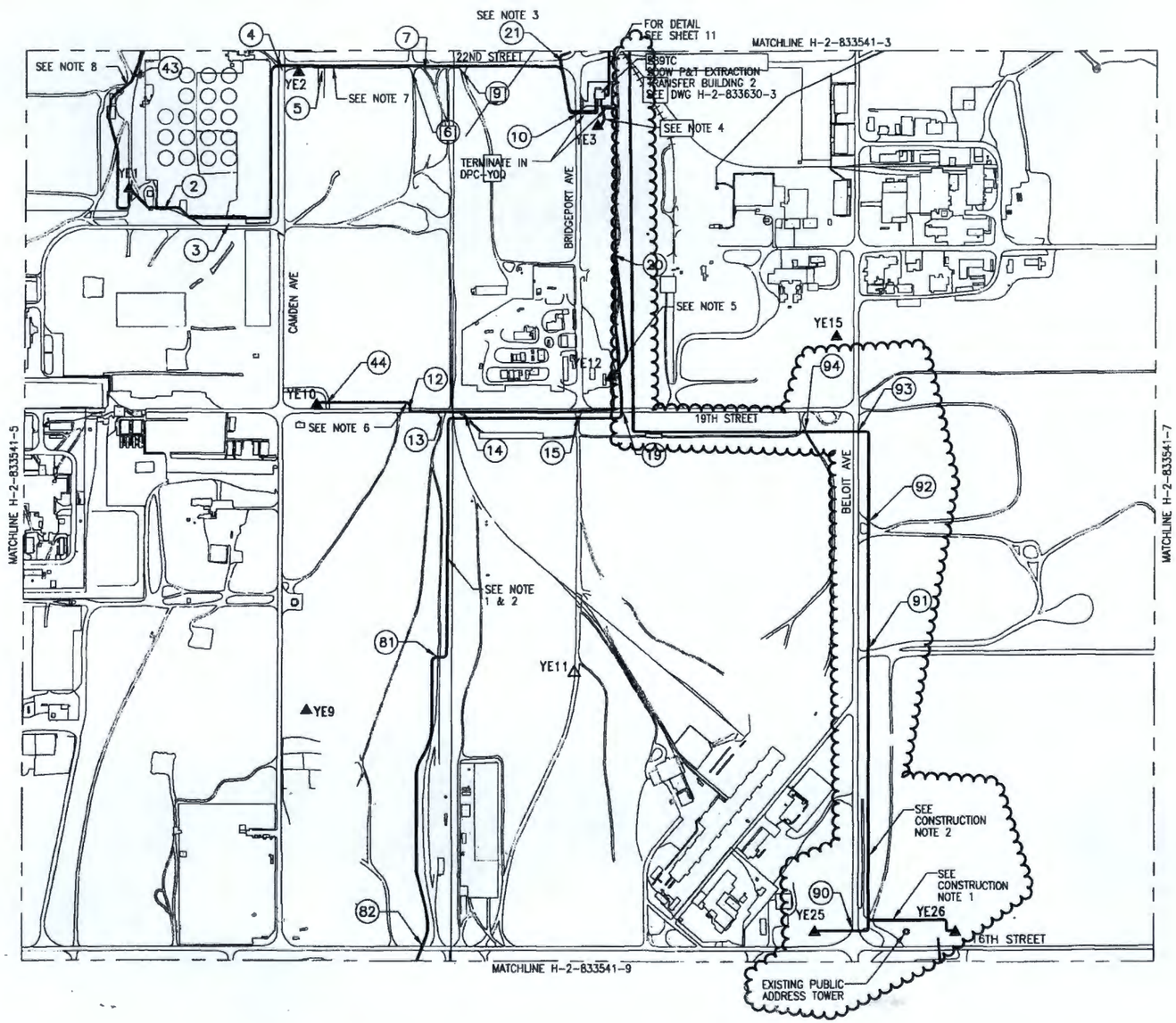

300 200 100 0 300 600 900
FEET

NOTES:

1. ARMORED, 6 FIBER, 50um, SINGLE MODE FIBER OPTIC CABLE, CORNING P/N 006E8F-31131-A1 OR EQUIVALENT. APPROXIMATE LENGTH = 10,000 FT.
2. FIBER OPTIC CABLE ALONG SIDE THE SAME PATH AS EXISTING HDPE PIPING. MAINTAIN 1-2 FOOT SEPARATION FROM PIPING.
3. FIBER OPTIC CABLE FROM BUILDING 289TE TO FOLLOW HDPE PIPING TO THE JUNCTION OF HDPE PIPING FROM YE6. FIBER OPTIC CABLE THEN FOLLOWS YE6 HDPE PIPING TO BUILDING 289TC.
4. ARMORED CAT 5 NETWORK CABLE BETWEEN DPC-YOQ & DPC-YE03.
5. ARMORED FIBER OPTIC CABLE BETWEEN DPC-YOQ & DPC-YE12.
6. ARMORED FIBER OPTIC CABLE BETWEEN DPC-YE12 & DPC-YE10.
7. ARMORED FIBER OPTIC CABLE BETWEEN DPC-YOQ & DPC-YE01. LEAVE SERVICE LOOP AT DPC-YE02 FOR FUTURE CONNECTION.
8. ARMORED FIBER OPTIC CABLE BETWEEN DPC-YE01 & DPC-YE16.
9. FOR GENERAL NOTES SEE SHEET 1.

CONSTRUCTION NOTES

1. ROUTE ONE ARMORED FIBER OPTIC CABLE ON THE GROUND, 1-2 FEET FROM HDPE PIPING BETWEEN OFT-YE25 AND OFT-YE26. TERMINATE FOUR FIBERS ON FIBER OPTIC PATCH PANEL OFT-YE25 AND TERMINATE THE OPPOSITE END FIBERS IN OFT-YE26. CABLE PER NOTE 1. APPROXIMATE LENGTH = 1200 FT.
2. ROUTE ONE ARMORED FIBER OPTIC CABLE ON THE GROUND, 1-2 FEET FROM HDPE PIPING BETWEEN OFT-YE26 AND DPC-YOTA. TERMINATE FOUR FIBERS ON FIBER OPTIC PATCH PANEL IN OFT-YE26 AND TERMINATE THE OPPOSITE END FIBERS IN DPC-YOTA'S FIBER OPTIC PATCH PANEL. CABLE PER NOTE 1. APPROXIMATE LENGTH = 8000 FT.

LEGEND

SEE SHEET 1

KEY MAP

2	3	4
5	6	7
8	9	10

DRAWING TRACEABILITY LIST			
		H-2-833526	INDEX OF DRAWINGS
H-1-91103	ROAD CROSSING DETAILS	REF NUMBER	TITLE
DWG NO	TITLE	REFERENCES	
		NEXT USED ON	

REVISIONS						
2	REVISED PER ECR-14-000513	DOB 3/13/14				
1	REVISED PER DCN-200W-279	WKS 6/28/12	PCS 7/31/12	SW 8/8/12		
0	INITIAL RELEASE PER DCN-200W-325					

	NAME	DATE
DRAWN BY	WB MONROE	3/11/14
CHECKED BY	WB MONROE	3/11/14
DESIGN AUTHORITY	SR WILCOX	3/11/14
DESIGN AGENT	BJ SASSEN	3/11/14
DESIGN AUTHORITY	SR WILCOX	3/11/14

U.S. DEPARTMENT OF ENERGY
Richland Operations Office

CONTROL SYSTEM FIBER OPTIC ROUTING PLAN

D | 289TC | 5901 | H-2-833541 | 2

SCALE 1"=300' DCN-200W-325 SHEET 6 OF

XXXX PLOTID XXXX

ECR-14-000762 Page 3D
"WAS CONDITION" (PER ECR-14-000513)

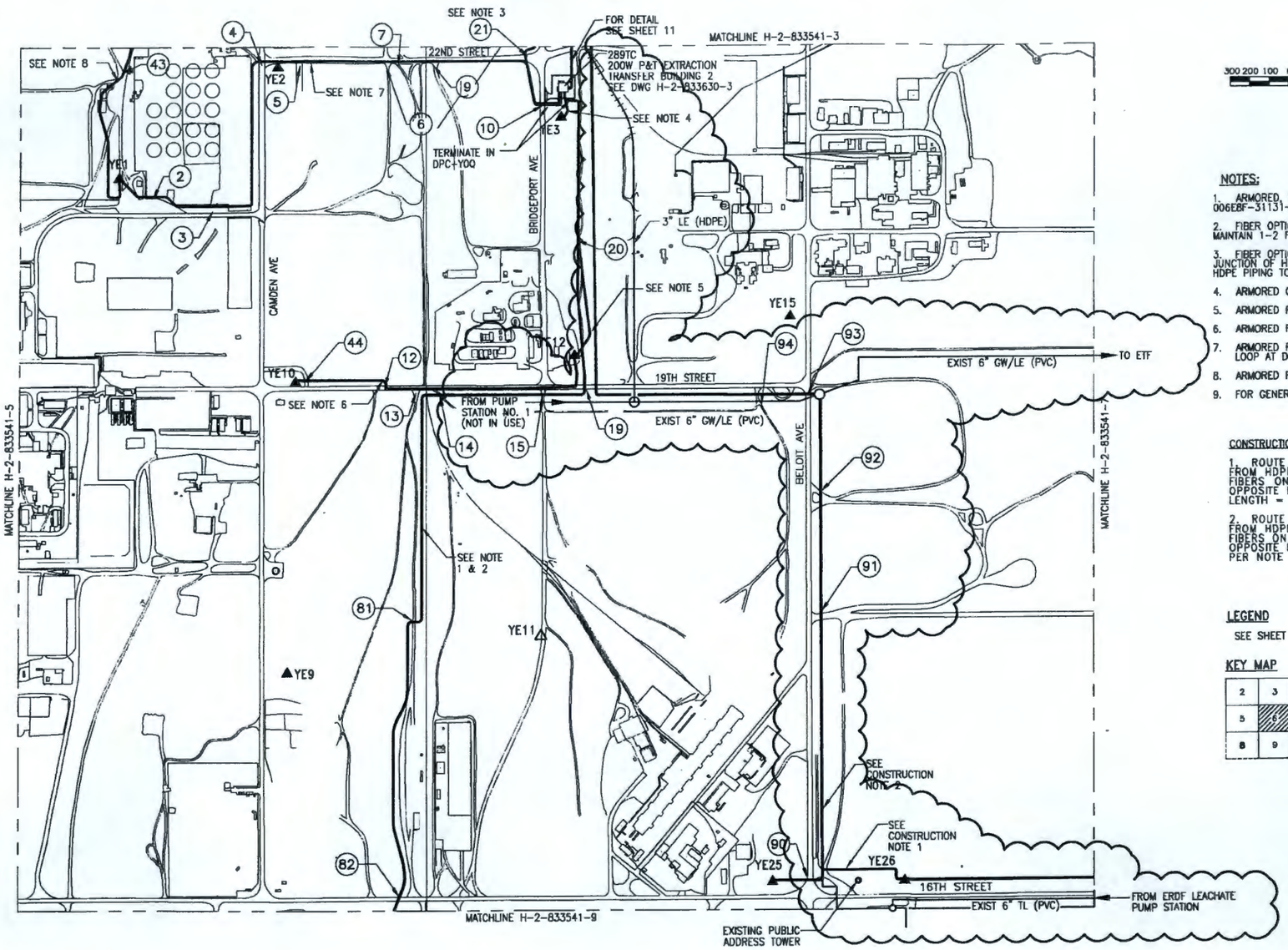

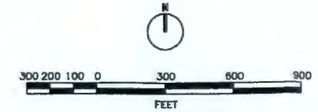

NOTES:

1. ARMORED, 6 FIBER, 50um, SINGLE MODE FIBER OPTIC CABLE, CORNING P/N 006EBF-31131-A1 OR EQUIVALENT. APPROXIMATE LENGTH = 10,000 FT.
2. FIBER OPTIC CABLE ALONG SIDE THE SAME PATH AS EXISTING HDPE PIPING. MAINTAIN 1-2 FOOT SEPARATION FROM PIPING.
3. FIBER OPTIC CABLE FROM BUILDING 289TE TO FOLLOW HDPE PIPING TO THE JUNCTION OF HDPE PIPING FROM YE6. FIBER OPTIC CABLE THEN FOLLOWS YE6 HDPE PIPING TO BUILDING 289TC.
4. ARMORED CAT 5 NETWORK CABLE BETWEEN DPC-YOQ & DPC-YE03.
5. ARMORED FIBER OPTIC CABLE BETWEEN DPC-YOQ & DPC-YE12.
6. ARMORED FIBER OPTIC CABLE BETWEEN DPC-YE12 & DPC-YE10.
7. ARMORED FIBER OPTIC CABLE BETWEEN DPC-YOQ & DPC-YE01. LEAVE SERVICE LOOP AT DPC-YE02 FOR FUTURE CONNECTION.
8. ARMORED FIBER OPTIC CABLE BETWEEN DPC-YE01 & DPC-YE16.
9. FOR GENERAL NOTES SEE SHEET 1.

CONSTRUCTION NOTES

1. ROUTE ONE ARMORED FIBER OPTIC CABLE ON THE GROUND, 1-2 FEET FROM HDPE PIPING BETWEEN OFT-YE25 AND OFT-YE26. TERMINATE FOUR FIBERS ON FIBER OPTIC PATCH PANEL OFT-YE25 AND TERMINATE THE OPPOSITE END FIBERS IN OFT-YE26. CABLE PER NOTE 1. APPROXIMATE LENGTH = 1200 FT.
2. ROUTE ONE ARMORED FIBER OPTIC CABLE ON THE GROUND, 1-2 FEET FROM HDPE PIPING BETWEEN OFT-YE26 AND DPC-YOTA. TERMINATE FOUR FIBERS ON FIBER OPTIC PATCH PANEL IN OFT-YE26 AND TERMINATE THE OPPOSITE END FIBERS IN DPC-YOTA'S FIBER OPTIC PATCH PANEL. CABLE PER NOTE 1. APPROXIMATE LENGTH = 8000 FT.

LEGEND

SEE SHEET 1

KEY MAP

2	3	4
5	6	7
8	9	10

DWG NO	TITLE	REFERENCES	
H-1-91103	ROAD CROSSING DETAILS	H-2-833526	INDEX OF DRAWINGS
		REF NUMBER	TITLE
DRAWING TRACEABILITY LIST		NEXT USED ON	

REV NO	DESCRIPTION	REV BY	CHKD	DRAWN
2	REVISED PER ECR-14-000512	DDB 9/11/14		
1	REVISED PER DCN-200W-279	KKS 6/27/12	BCS 7/30/12	SW 7/30/12
0	INITIAL RELEASE PER DCN-200W-325			

REVISIONS

	NAME	DATE
DESIGN AGENCY	WB MONROE	4/01/12
DRAWN BY	WB MONROE	4/01/12
CHECKED BY	SR WILCOX	4/01/12
PROJ ENGR	P SASSEN	4/01/12
DESIGN AUTHORITY	SR WILCOX	4/01/12

U.S. DEPARTMENT OF ENERGY
Richland Operations Office

TITLE: CONTROL SYSTEM FIBER OPTIC ROUTING PLAN

SIZE D | ALDM NO 289TC | MODEL NO 5901 | DWG NO H-2-833541 | REV 2

SCALE 1"=300' | FILE DCN-200W-325 | SHEET 6 OF 6

XXXX PLOTID XXXX

ECR-14-000762 Page 31

DWG NO H-2-833541 SH 7 OF REV 1

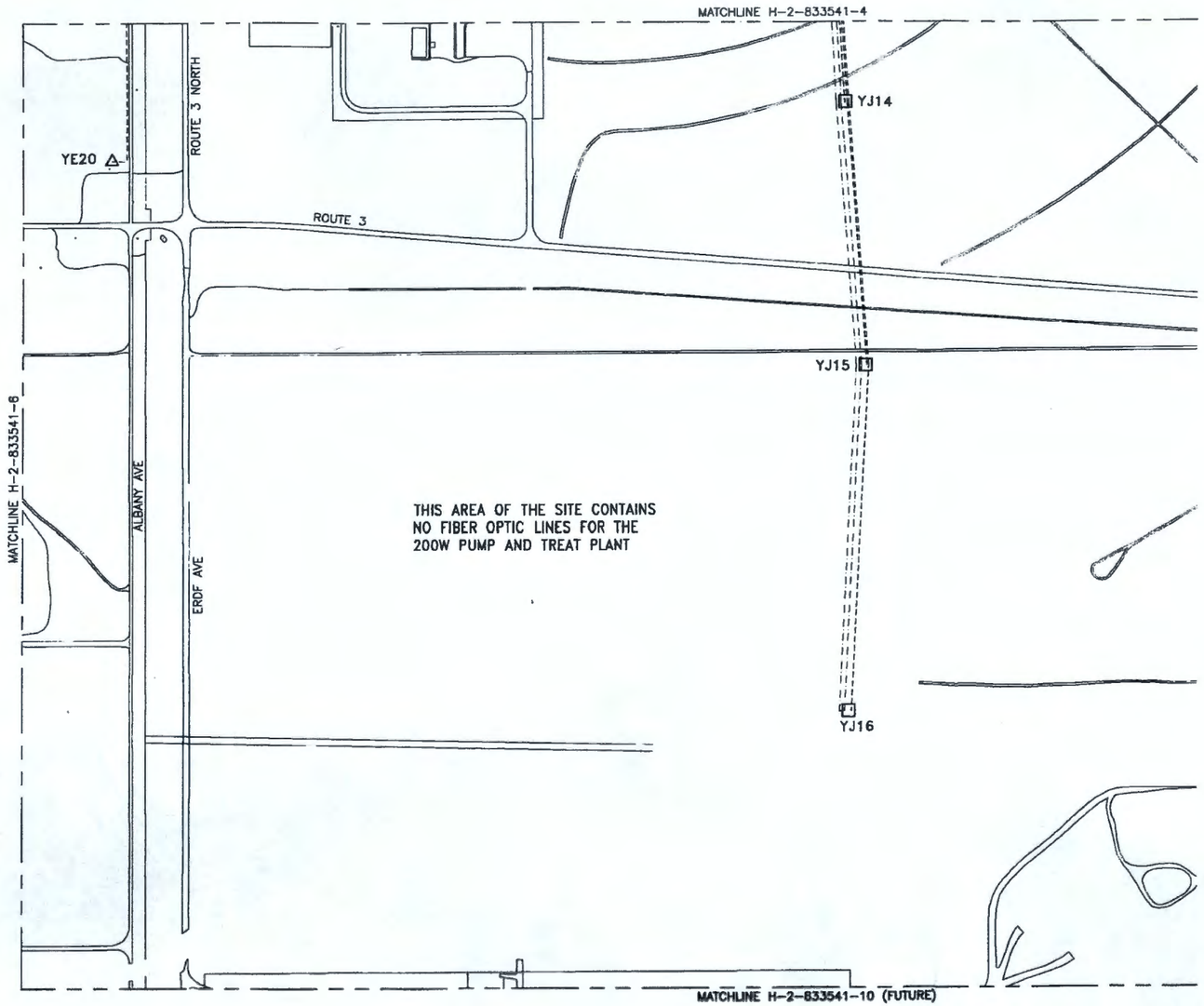

N

300 200 100 0 300 600 900
FEET

NOTES:

1. FOR GENERAL NOTES SEE SHEET 1.

LEGEND

SEE SHEET 1

KEY MAP

2	3	4
5	6	7
8	9	10

ECR-14-000762 Page 3a
"WAS CONDITION"

DRAWING TRACEABILITY LIST			
		H-2-833526	INDEX OF DRAWINGS
H-1-91103	ROAD CROSSING DETAILS	REF NUMBER	TITLE
DWG NO	TITLE	REFERENCES	
		NEXT USED ON	

REVISIONS					
1	D	REVISED PER BCN-200W-279 (PREVIOUSLY DWG SHEET 5)	JKKS 6/20/12	BCS 7/31/12	SW 7/31/12
	D	INITIAL RELEASE PER BCN-200W-328			

	NAME	DATE
DRAWN BY	R. RENZ	6/7/12
CHECKED BY	W.J. BOULDS	6/7/12
APPROVED BY	SR WILCOX	6/7/12
APPROVED BY	BC SASSER	6/7/12
DESIGN AUTHORITY	SR MILLER	

U.S. DEPARTMENT OF ENERGY
Richland Operations Office

TITLE: CONTROL SYSTEM FIBER OPTIC ROUTING PLAN

SIZE D | ALN NO 28618 28970 | MODULE NO 5901 | DWG NO H-2-833541 | REV 1
SCALE 1"=300' | REF DCN-200W-328 | SHEET 7 OF

XXXX PLOTID XXXX

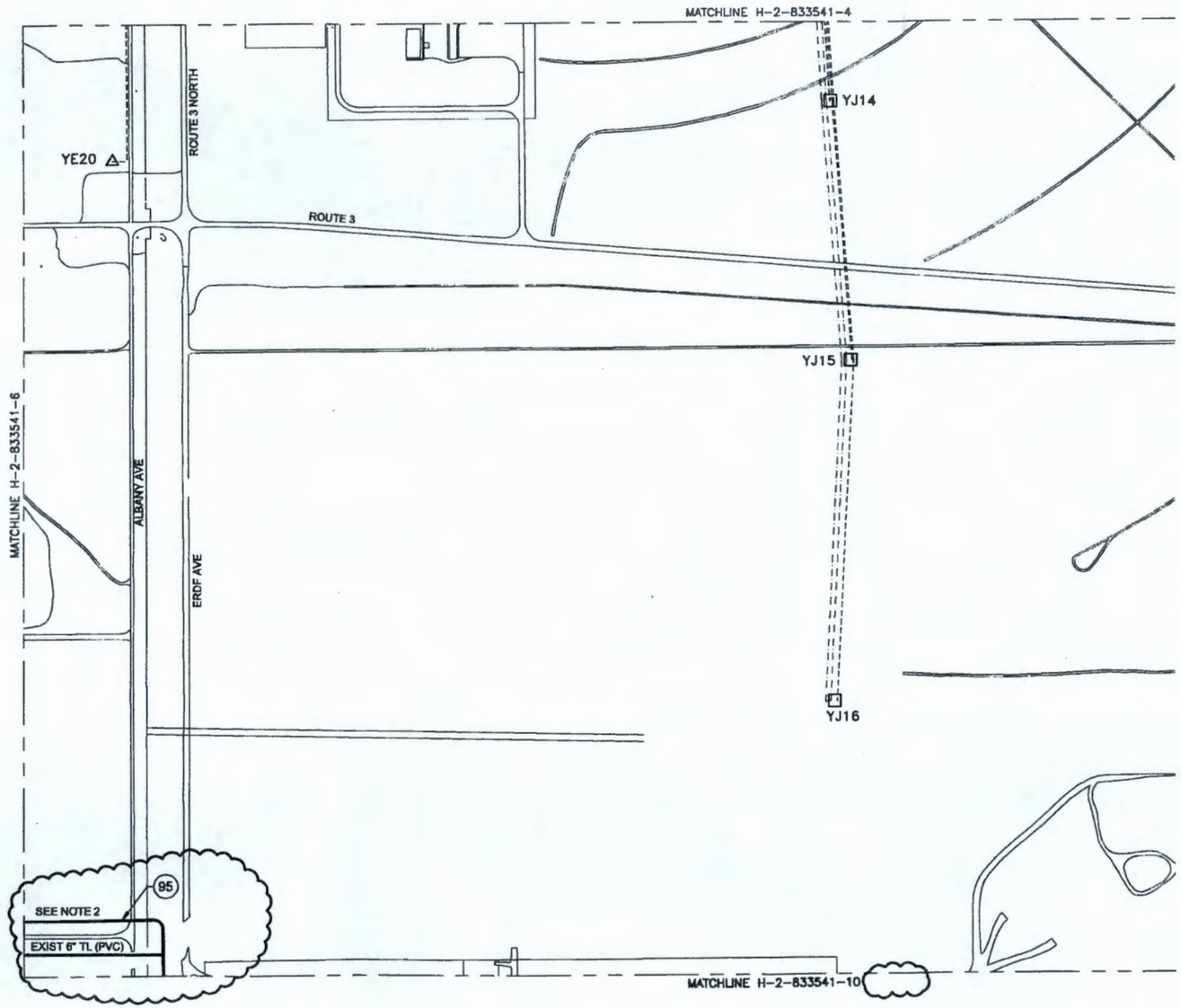

N

300 200 100 0 300 600 900
FEET

NOTES:

1. FOR GENERAL NOTES SEE SHEET 1.
2. ARMORED FIBER OPTIC CABLE FROM DPC-YOTA LOCATED IN 289TA TO DPC-Y17 LOCATED IN 6618C

LEGEND

SEE SHEET 1

KEY MAP

2	3	4
5	6	7
8	9	10

DWG NO	TITLE	REFERENCES	NEXT USED ON
H-1-91103	ROAD CROSSING DETAILS	H-2-833526	INDEX OF DRAWINGS

DRAWING TRACEABILITY LIST

REV	DESCRIPTION	BY	CHK	DATE
1	REVISED PER BCN-200W-279 (PREVIOUSLY DWG SHEET 5)	KKS	BCS	6/20/12
0	INITIAL RELEASE PER BCN-200W-328	SW		7/31/12

REVISIONS

	NAME	DATE
DESIGN	BENZ	4-7-11
DRAFTING	WJ BOULDS	2-3-12
ENGINEER	SR WILCOX	2-3-12
PROJ ENGR	BL GASSER	2-3-12
DESIGN VERIFIER	SG MILLER	2-3-12

U.S. DEPARTMENT OF ENERGY
Richland Operations Office

TITLE: CONTROL SYSTEM FIBER OPTIC ROUTING PLAN

SIZE D | LOG NO 2691B 2697C | PROJ NO 5901 | DWG NO H-2-833541 | REV 1

SCALE 1"=300' | DCN-200W-328

XXXX PLOTID XXXX

DOE_YR_D.DWG (01-01)

DWG NO H-2-833541 SH 10 OF REV D

N

300 200 100 0 300 600 900
FEET

KEY MAP

2	3	4
5	6	7
8	9	10

THIS AREA OF THE SITE CONTAINS
NO FIBER OPTIC LINES FOR THE
200W PUMP AND TREAT PLANT

ECR-14-000762 Page 34
"WAS CONDITION"

DWG NO	TITLE
H-2-833526	INDEX OF DRAWINGS

DRAWING TRACEABILITY LIST

REF NUMBER	TITLE
NEXT USED ON	REFERENCES

REV	DWG	DESCRIPTION	REV BY	DWG
D		INITIAL RELEASED DCN-200W-279		

REVISIONS

	NAME	DATE
DRAWN BY	W. DAVIS	7/11/97
CHECKED BY	J.E. DAVIS	7/11/97
DESIGN ENGR	J.R. WILCOX	7/11/97
CHECKED BY	R.L. SASSER	7/11/97
DESIGN AUTHORITY	B.G. MILLER	7/11/97

U.S. DEPARTMENT OF ENERGY
Richland Operations Office

CONTROL SYSTEM
FIBER OPTIC ROUTING
PLAN

REV D | LOC 200W | DRAWING 5901 | H-2-833541 | REV 0

SCALE AS NOTED | SCT | DCN-200W-279 | SHEET 10 | REV

XXXX PLOTID XXXX

DOE_TB_8.DWG (01-00)

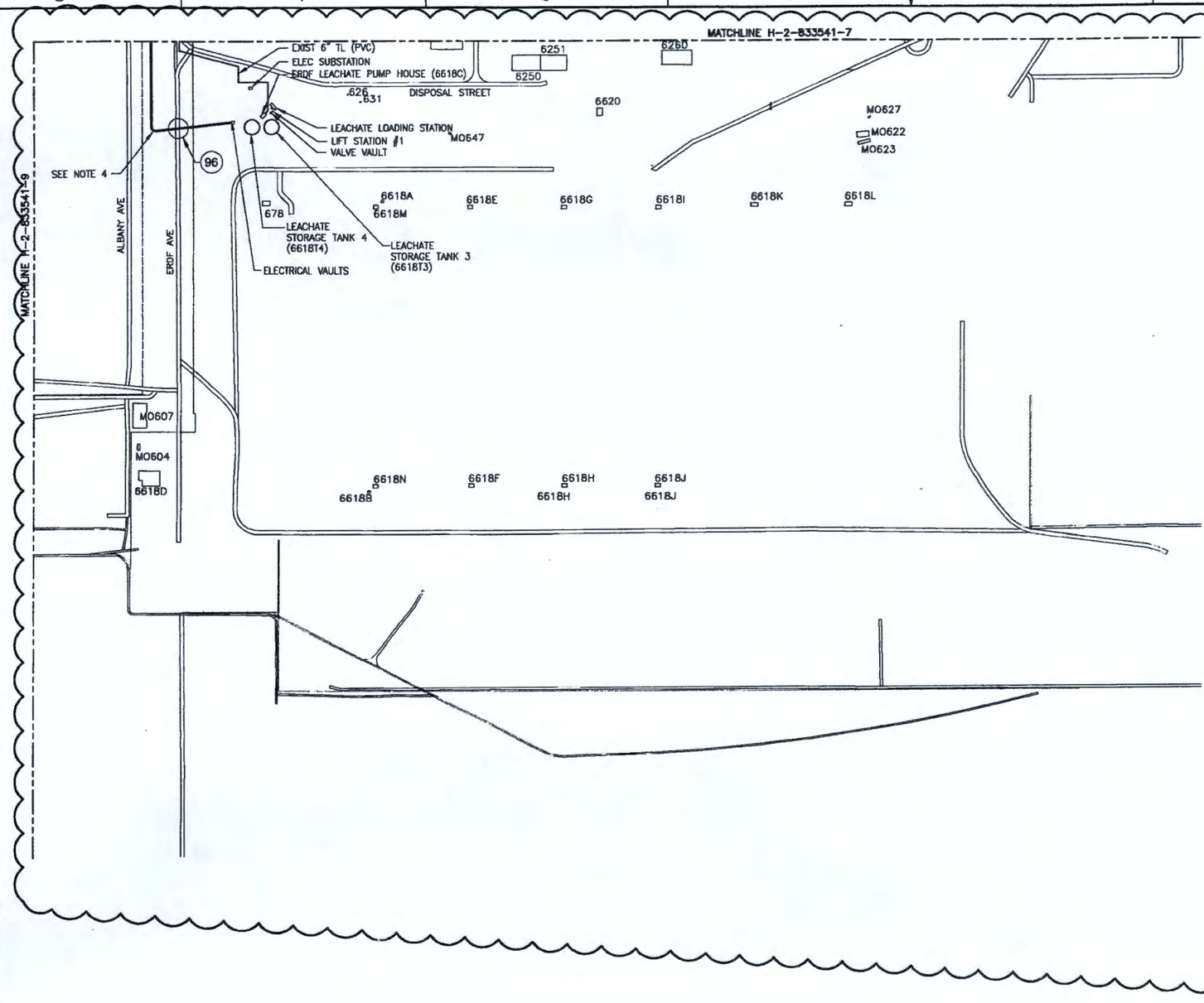

N

300 200 100 0 300 600 900
FEET

NOTES:

1. FOR GENERAL NOTES SEE SHEET 1.
2. FIBER OPTIC CONDUIT TO ENTER WEST SIDE OF EXISTING ELECTRICAL VAULT ON ERDF PROPERTY.
3. FIBER IS TO BE ROUTED FROM EXISTING ELECTRICAL VAULT TO THE ERDF PUMPHOUSE UTILIZING EXISTING UNDERGROUND CONDUITS.
4. ARMORED FIBER OPTIC CABLE FROM DPC-YOTA LOCATED IN 289TA TO DPC-Y17 LOCATED IN 6618C

LEGEND

SEE SHEET 1

KEY MAP

2	3	4
5	6	7
8	9	10

ECR-14-000762 Page 35

DWG NO	TITLE
DRAWING TRACEABILITY LIST	

REF NUMBER	TITLE
H-2-833526	INDEX OF DRAWINGS
REFERENCES	
NEXT USED ON	

REV	DESCRIPTION	REV BY	DATE
0	INITIAL RELEASED DCN-2DOW-279		

REVISIONS

NAME	DATE	COMPANY
DESIGN AGENCY JE DAVIS	7/13/12	CH2M HILL
DESIGN AUTHORITY JE DAVIS	7/13/12	CH2M HILL
DESIGN LEAD SR WILCOX	7/13/12	CH2M HILL
PROJ ENGR BL SASSER	7/13/12	CH2M HILL
DESIGN AUTHORITY BG MILLER	7/13/12	CH2M HILL

U.S. DEPARTMENT OF ENERGY
Richland Operations Office

CONTROL SYSTEM
FIBER OPTIC ROUTING
PLAN

SIZE	ALBA ID	PROJ NO	DWG NO	REV
D	2DOW	5901	H-2-833541	0

SCALE AS NOTED | SCHEDULE DCN-2DOW-279 | SHEET 10 OF

XXXX PLOTID XXXX

DWG NO H-2-833541 SH 11 OF REV 1

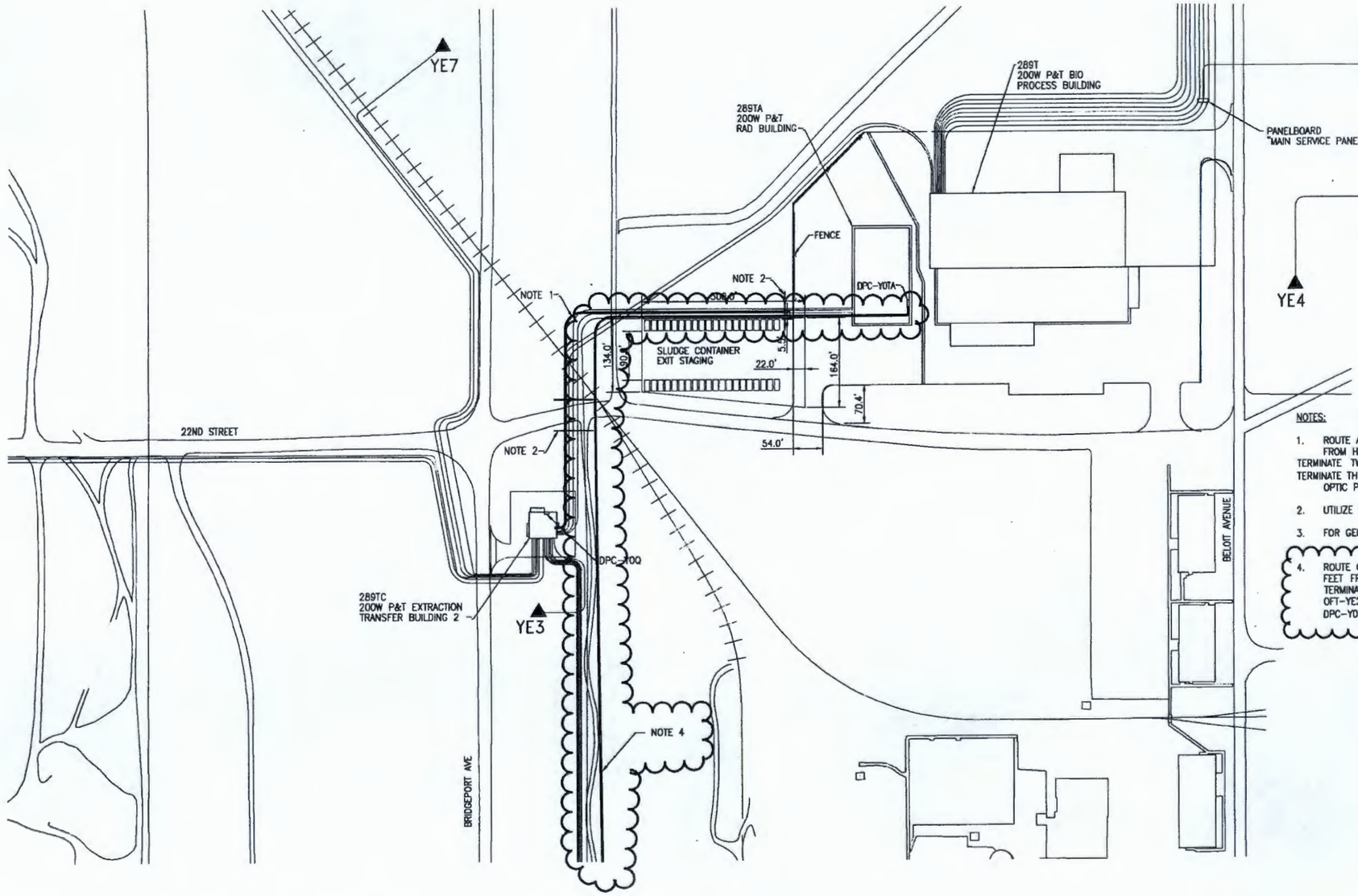

KEY MAP

2	3	4
5	6	7
8	9	10

NOTES:

1. ROUTE ARMORED FIBER OPTIC CABLE ON GROUND, 1-2 FEET FROM HDPE PIPING BETWEEN DPC-YOQ AND DPC-YOTA. TERMINATE TWO FIBERS ON NETWORK SWITCH IN DPC-YOQ AND TERMINATE THE OPPOSITE END FIBERS IN DPC-YOTA'S FIBER OPTIC PATCH PANEL.
2. UTILIZE SPARE SLEEVE FOR FIBER CABLES.
3. FOR GENERAL NOTES SEE SHEET 1.
4. ROUTE ONE ARMORED FIBER OPTIC CABLE ON GROUND, 1-2 FEET FROM HDPE PIPING BETWEEN OFT-YE26 AND DPC-YOTA. TERMINATE FOUR FIBERS ON FIBER OPTIC PATCH PANEL IN OFT-YE26 AND TERMINATE THE OPPOSITE END FIBERS IN DPC-YOTA'S FIBER OPTIC PATCH PANEL.

BLDG. NO.
289T
289TA
289TC

INDEX NO.

THIS SPACE RESERVED FOR BUILDING AND INDEX NUMBERS

DWG NO	TITLE
DRAWING TRACEABILITY LIST	

REF NUMBER	TITLE
H-2-833526	INDEX OF DRAWINGS
REFERENCES	
NEXT USED ON	

REV NO	DESCRIPTION	REQ BY	DATE	CHKD
1	REVISED PER ECR-14-000513	DCB	5/1/14	
0	INITIAL RELEASE PER DCN-200W-279 (PREVIOUSLY DWG SHEET 4)			

REVISIONS

NAME	DATE
K.K. STEPHENS	9/9/13
M.E. DAVIS	9/11/13
S.R. WILCOX	7/31/13
B.L. SASSER	7/31/13
BG MILLER	7/31/13

U.S. DEPARTMENT OF ENERGY
Richland Operations Office

CONTROL SYSTEM
FIBER OPTIC ROUTING
ENLARGED PLAN

SIZE D | BLDG NO SEE LIST | INDEX NO 5905 | DWG NO H-2-833541 | REV 1
SCALE NONE | REF DCN-200W-279 | SHEET 11 OF

XXXX PLOTID XXXX

ECR-14-000762 Page 34
"WAS CONDITION" (PER ECR-14-000513)

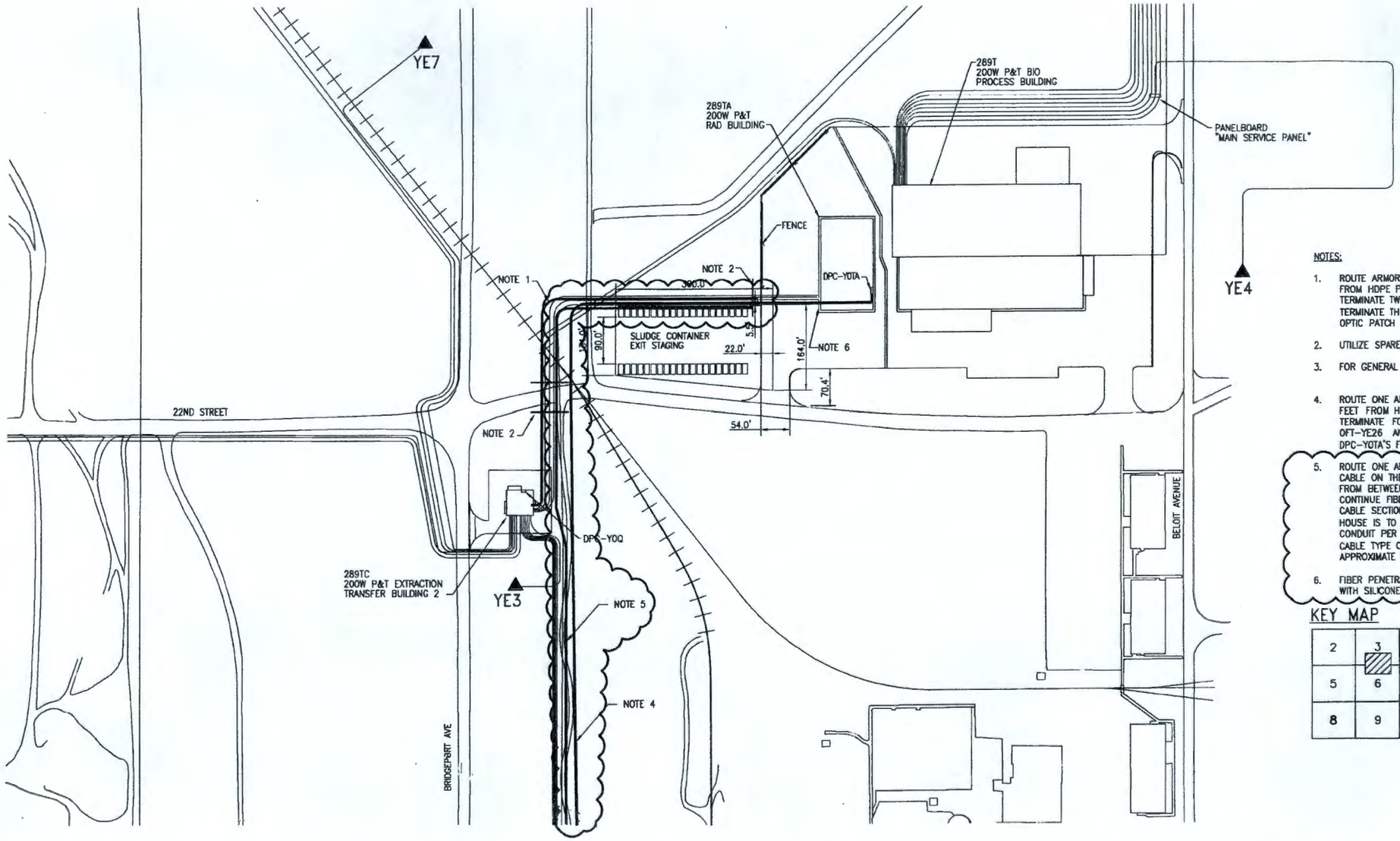

NOTES:

1. ROUTE ARMORED FIBER OPTIC CABLE ON GROUND, 1-2 FEET FROM HDPE PIPING BETWEEN DPC-YOQ AND DPC-YOTA. TERMINATE TWO FIBERS ON NETWORK SWITCH IN DPC-YOQ AND TERMINATE THE OPPOSITE END FIBERS IN DPC-YOTA'S FIBER OPTIC PATCH PANEL.
2. UTILIZE SPARE SLEEVE FOR FIBER CABLES.
3. FOR GENERAL NOTES SEE SHEET 1.
4. ROUTE ONE ARMORED FIBER OPTIC CABLE ON GROUND, 1-2 FEET FROM HDPE PIPING BETWEEN OFT-YE26 AND DPC-YOTA. TERMINATE FOUR FIBERS ON FIBER OPTIC PATCH PANEL IN OFT-YE26 AND TERMINATE THE OPPOSITE END FIBERS IN DPC-YOTA'S FIBER OPTIC PATCH PANEL.
5. ROUTE ONE ARMORED 6 STRAND, SINGLE MODE FIBER OPTIC CABLE ON THE GROUND 1-2 FEET AWAY FROM HDPE PIPING FROM BETWEEN DPC-YE26 AND DPC-YOTA. AFTER DPC-YE26 CONTINUE FIBER OPTIC TO ERDF LEACHATE PUMP HOUSE. CABLE SECTION BETWEEN YE26 AND ERDF LEACHATE PUMP HOUSE IS TO BE INSTALLED IN BURIED 2" SCHEDULE 40 PVC CONDUIT PER SPECIFICATIONS SGW-58330. CABLE TYPE CORNING PART #006EBF-31131-A1. APPROXIMATE LENGTH = 10,000 FT.
6. FIBER PENETRATION AT BUILDING TO BE 1" PVC SLEEVE SEALED WITH SILICONE.

KEY MAP

2	3	4
5	6	7
8	9	10

BLDG. NO.
289T
289TA
289TC

INDEX NO.

THIS SPACE RESERVED FOR BUILDING AND INDEX NUMBERS

DWG NO	TITLE
H-2-833526	INDEX OF DRAWINGS

DRAWING TRACEABILITY LIST

REF NUMBER	TITLE
	REFERENCES
NEXT USED ON	

REV NO	DESCRIPTION	REV BY	REV DATE
1	REVISED PER EDR-14-000523	DCB	5/21/14
0	INITIAL RELEASE PER DCN-200W-279 (PREVIOUSLY DWG SHEET 4)		

REVISIONS

	NAME	DATE
DRAWN BY	SC STEPHENS	7/31/01
DESIGN	JE DAVIS	7/31/01
DESIGN	JR WILCOX	7/31/01
DESIGN	BL SASSER	7/31/01
DESIGN AUTHORITY	SG MILLER	7/31/01

U.S. DEPARTMENT OF ENERGY
Richland Operations Office

CONTROL SYSTEM
FIBER OPTIC ROUTING
ENLARGED PLAN

SIZE	ALDG NO	INDEX NO	DWG NO	REV
D	SCE LIST	5908	H-2-833541	1

SCALE NONE | FOR DCN-200W-279 | SHEET 11 OF

XXXX PLOTID XXXX

ECR-14-000762 Page 37

DWG NO H-2-833541 SH 12 OF REV 0

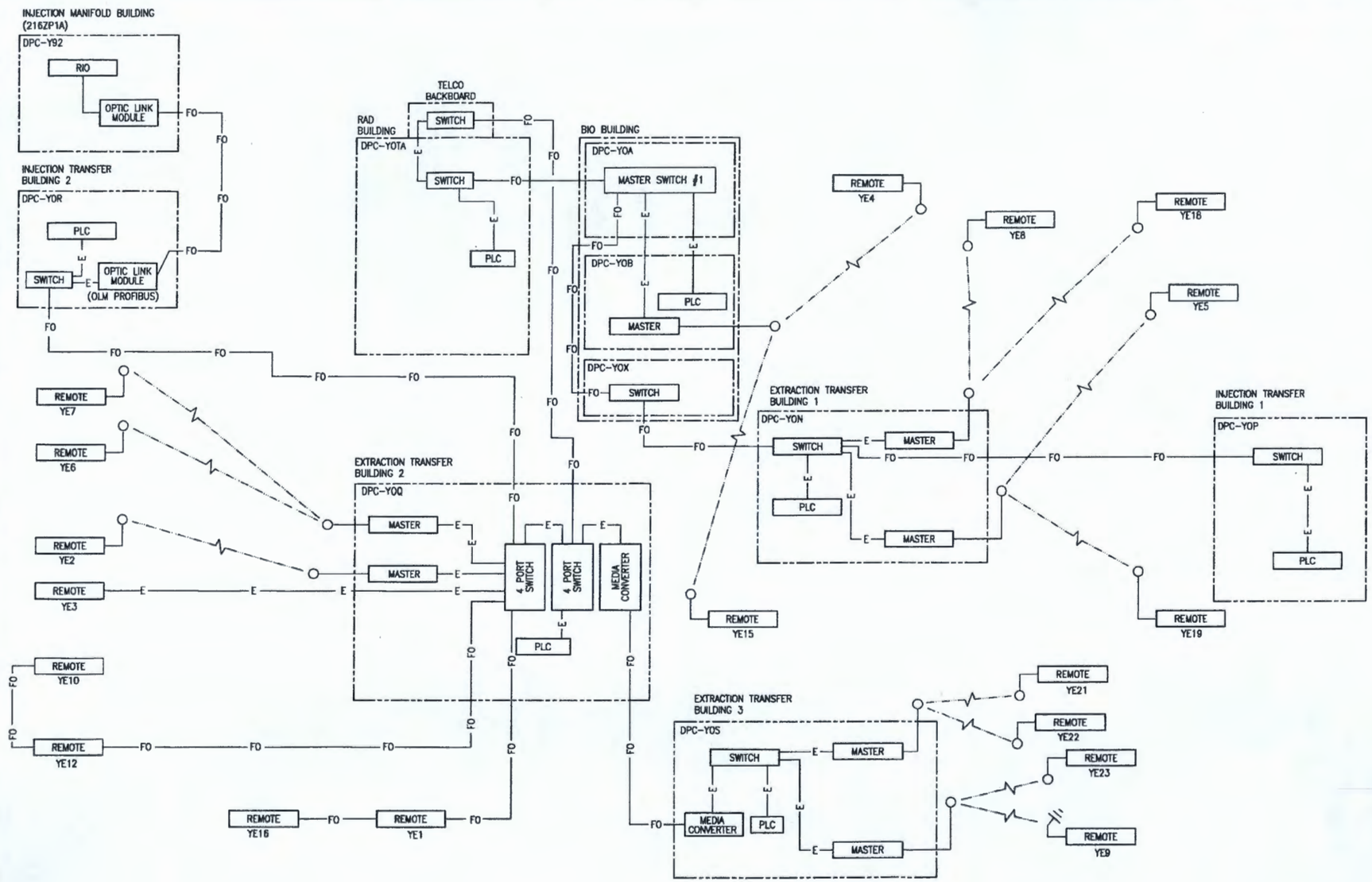

NOTES:

1. EACH REMOTE RADIO IS PAIRED WITH A SPECIFIC MASTER AS INDICATED.
2. SEE H-2-833542 SH 1 THRU 10 FOR ADDITIONAL DETAILS.

LEGEND

- YAGI ANTENNA
- OMNIDIRECTIONAL ANTENNA
- RADIO LINK
- —E— ETHERNET
- —FO— FIBER OPTIC

PROFINET BLOCK DIAGRAM

DWG NO	TITLE	REFERENCES	
DRAWING TRACEABILITY LIST		NEXT USED ON	
		H-2-833526	INDEX OF DRAWINGS
		REF NUMBER	TITLE

REV	REV BY	DESCRIPTION	REV DATE
0		INITIAL RELEASE PER DCN-208W-279 (PREVIOUSLY DWG SHEET 3)	

REVISIONS

NAME	DATE
DESIGNED BY DC SIEBENS	4/9/13
DRAFTED BY J.E. DAVIS	4/9/13
REVIEWED BY CR WILCOX	4/9/13
APPROVED BY DC SASSER	4/9/13
DESIGN AUTHORITY DG MILLER	4/9/13

U.S. DEPARTMENT OF ENERGY
Richland Operations Office

CONTROL SYSTEM COMMUNICATION PATH NETWORK BLOCK DIAGRAM

SIZE	LAB OR SPEC LIST	CALC NO	DWG NO	REV
D	SPEC LIST	5608	H-2-833541	0
SCALE NONE		DCN-208W-279	SHEET 12 OF	

XXXX PLOTID XXXX

BLDG. NO.
289T
289TA
289TB
289TC
289TD
289TE
289TF
216ZP1A

INDEX NO.

THIS SPACE RESERVED FOR BUILDING AND INDEX NUMBERS

ECR-14-000762
"WAS CONDITION"

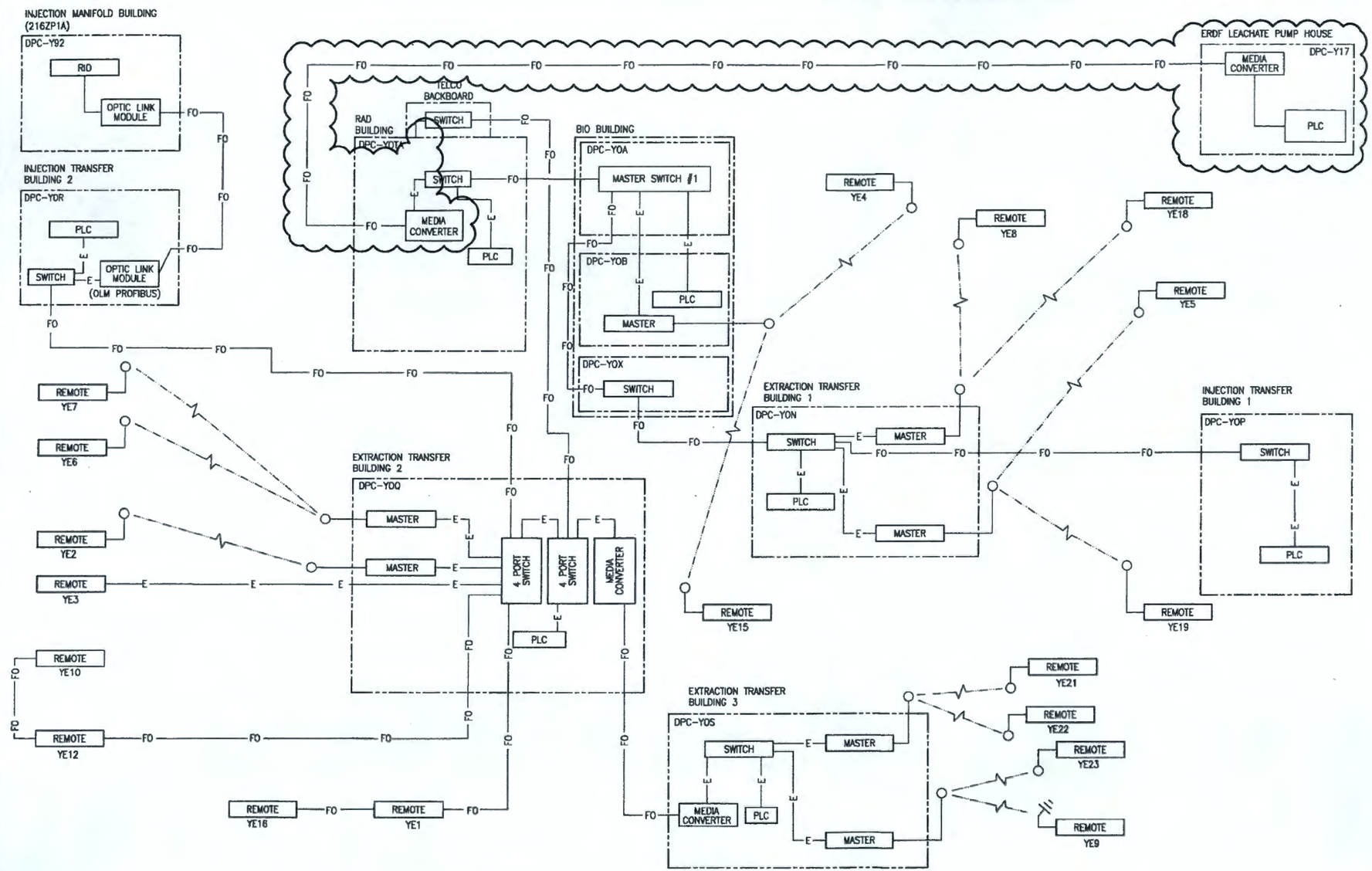

NOTES:

1. EACH REMOTE RADIO IS PAIRED WITH A SPECIFIC MASTER AS INDICATED.
2. SEE H-2-833542 SH 1 THRU 10 FOR ADDITIONAL DETAILS.

LEGEND

- YAGI ANTENNA
- OMNIDIRECTIONAL ANTENNA
- RADIO LINK
- —E— ETHERNET
- —FO— FIBER OPTIC

PROFINET BLOCK DIAGRAM

BLDG. NO.
289T
289TA
289TB
289TC
289TD
289TE
289TF
216ZP1A
6618C

INDEX NO.

THIS SPACE RESERVED FOR BUILDING AND INDEX NUMBERS

DRAWING TRACEABILITY LIST			
DWG NO	TITLE	REFERENCES	
		REF NUMBER	TITLE
		H-2-833526	INDEX OF DRAWINGS
		NEXT USED ON	

REVISIONS			
REV	DESCRIPTION	REV BY	DATE
0	INITIAL RELEASE PER DCN-200W-279 (PREVIOUSLY DWG SHEET 3)		

NAME	DATE
DRAWN BY TK STEPHENS	1/31/01
DESIGN ENGR JP DAVIS	1/31/01
CHECKED BY SR WILCOX	1/31/01
PROJ ENGR PL SASSER	1/31/01
DESIGN AUDITOR BG MILLER	1/31/01

U.S. DEPARTMENT OF ENERGY
Richland Operations Office

TITLE: CONTROL SYSTEM COMMUNICATION PATH NETWORK BLOCK DIAGRAM

REV 0 | SIZE D | SEE LIST | INDEX NO. 5808 | DWG NO H-2-833541 | SHEET 12 OF

SCALE NONE | SYST DCN-200W-279 | SHEET 12 OF

XXXX PLOTID XXXX

ECR-14-000762 Page 39

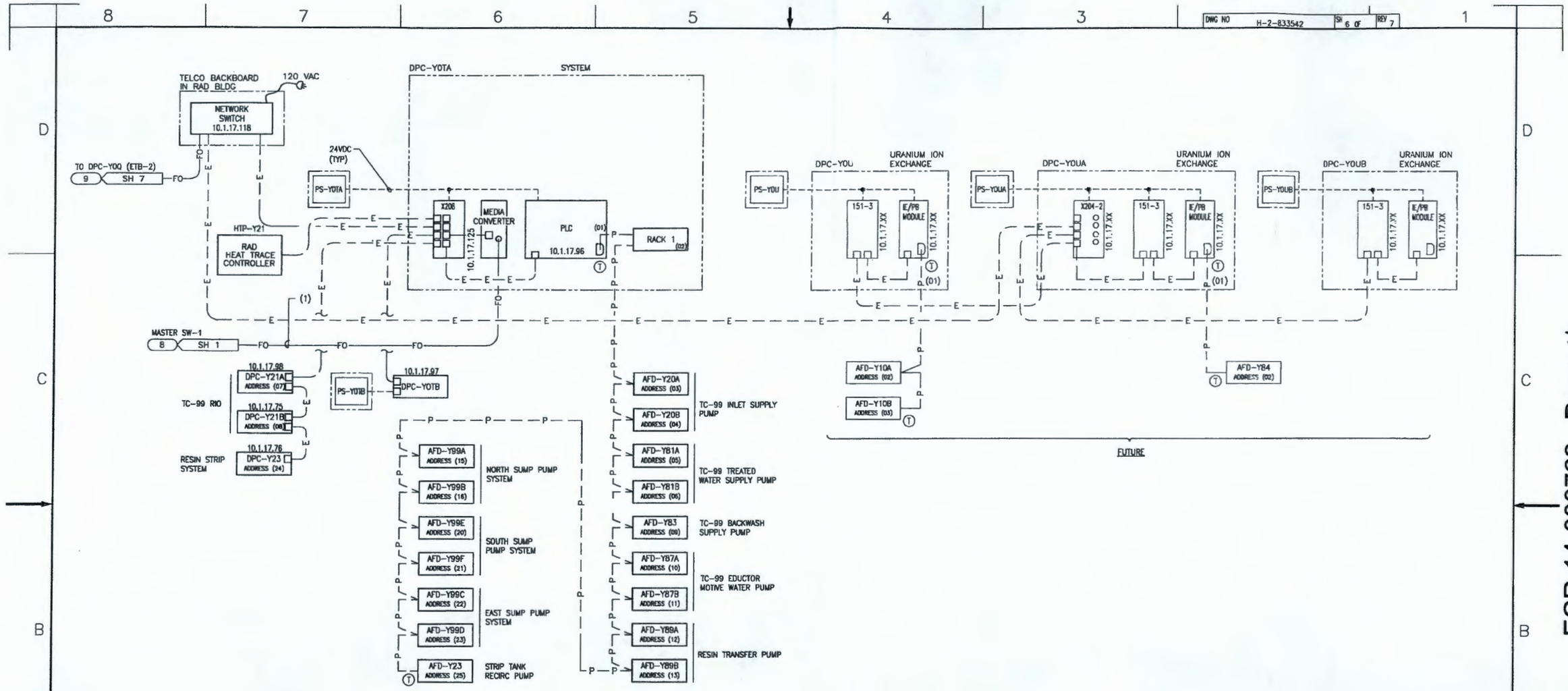

NOTES:

1. SEE SHEET 1 FOR GENERAL NOTES & LEGEND.
2. FIELD ROUTE PROFIBUS CABLES FOR MINIMUM LENGTH PRACTICAL.
3. MINIMUM LENGTH BETWEEN NODES IS 1 METER.

DWG NO	TITLE
DRAWING TRACEABILITY LIST	

REF NUMBER	TITLE
H-2-833526	INDEX OF DRAWINGS
REFERENCES	NEXT USED ON

REV	DESCRIPTION	DATE	BY	CHK	APP
7	REVISED PER DCN-208W-279	7/11/08	JED	BLS	SW

REVISIONS

NAME	DATE
DRAWN BY W. ANGER	
CHECKED BY E.P. COOPER	
APPROVED BY A. MOSLEY	
DESIGN AUTHORITY S. SASSEN	
DESIGN AUTHORITY A. MOSLEY	

U.S. DEPARTMENT OF ENERGY
Richland Operations Office

TITLE: CONTROL SYSTEM RAD BLDG NETWORK DIAGRAM

SIZE D | CODE IDENT NO 28881A | HOUSING CODE NO 590B | DWG NO H-2-833542 | REV 7

SCALE NONE | SHEET | DCN-208W-102 | SHEET 6 OF

XXXX PLOTTED XXXX

ECR-14-000762
"WAS CONDITION"

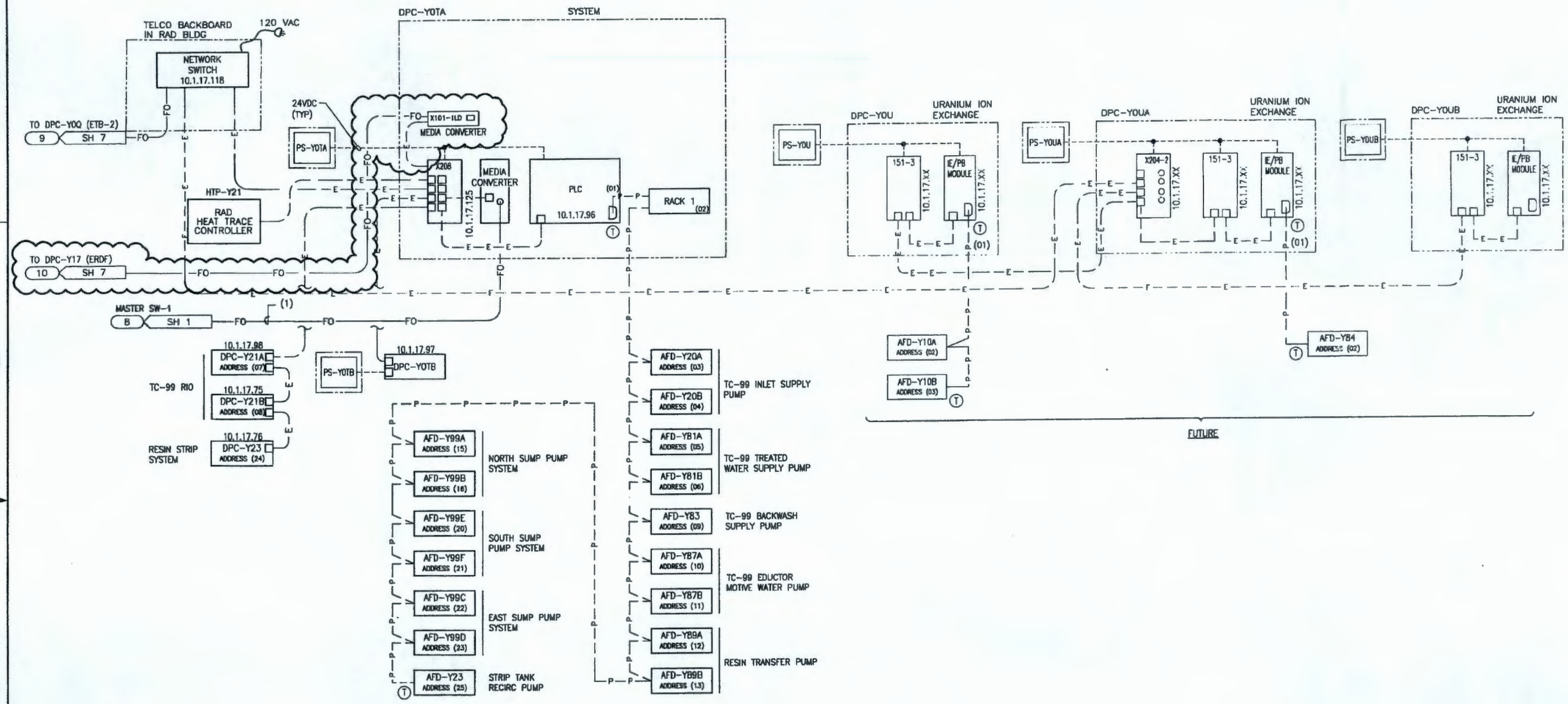

NOTES:

1. SEE SHEET 1 FOR GENERAL NOTES & LEGEND.
2. FIELD ROUTE PROFIBUS CABLES FOR MINIMUM LENGTH PRACTICAL.
3. MINIMUM LENGTH BETWEEN NODES IS 1 METER.

DWG NO	TITLE
DRAWING TRACEABILITY LIST	

REF NUMBER	TITLE
H-2-833526	INDEX OF DRAWINGS
REFERENCES	
NEXT USED ON	

REV	DESCRIPTION	DATE	BY
7	REVISED PER DCN-280W-279	2/11/14	JED
6		12/21/12	BLS
5		3/29/12	SW

REVISIONS

	NAME	DATE
DRAWN BY	W ANGER	7/14/97
CHECKED BY	PR COOPER	8/5/97
APPROVED BY	J MOSLEY	8/5/97
REVIEWED BY	R SASSEN	8/5/97
DESIGN AUTHORITY	J MOSLEY	8/5/97

U.S. DEPARTMENT OF ENERGY
Richland Operations Office

CONTROL SYSTEM
RAD BLDG
NETWORK DIAGRAM

SIZE D | LOG NO 28BTA | PROJ NO 5808 | DWG NO H-2-833542 | REV 7
SCALE NONE | SEQ DCN-280W-102 | SHEET 6 OF

XXXX PLOTID XXXX

ECR-14-000762 Page 41

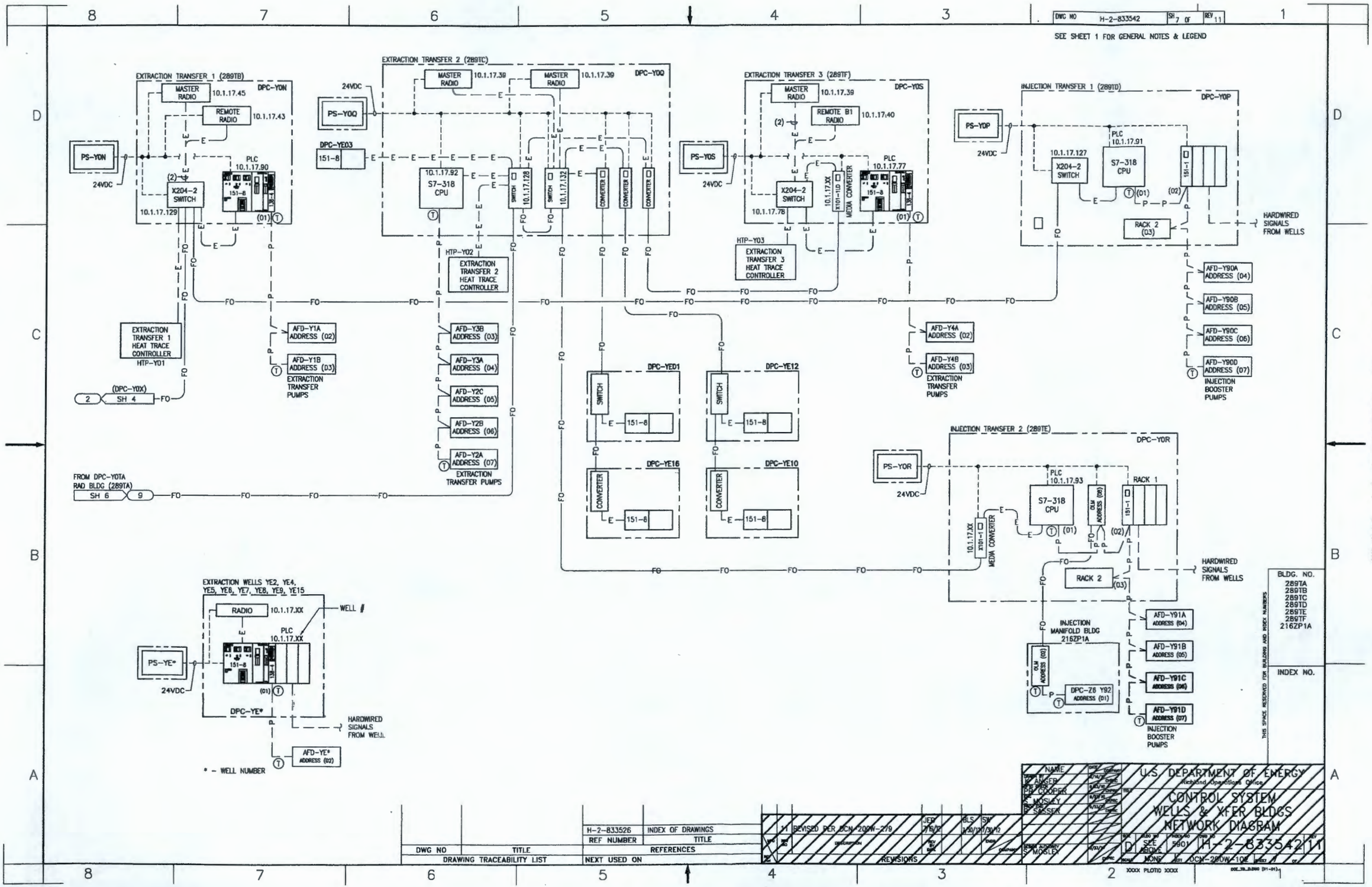

ECR-14-000762 Page 4a
"WAS CONDITION"

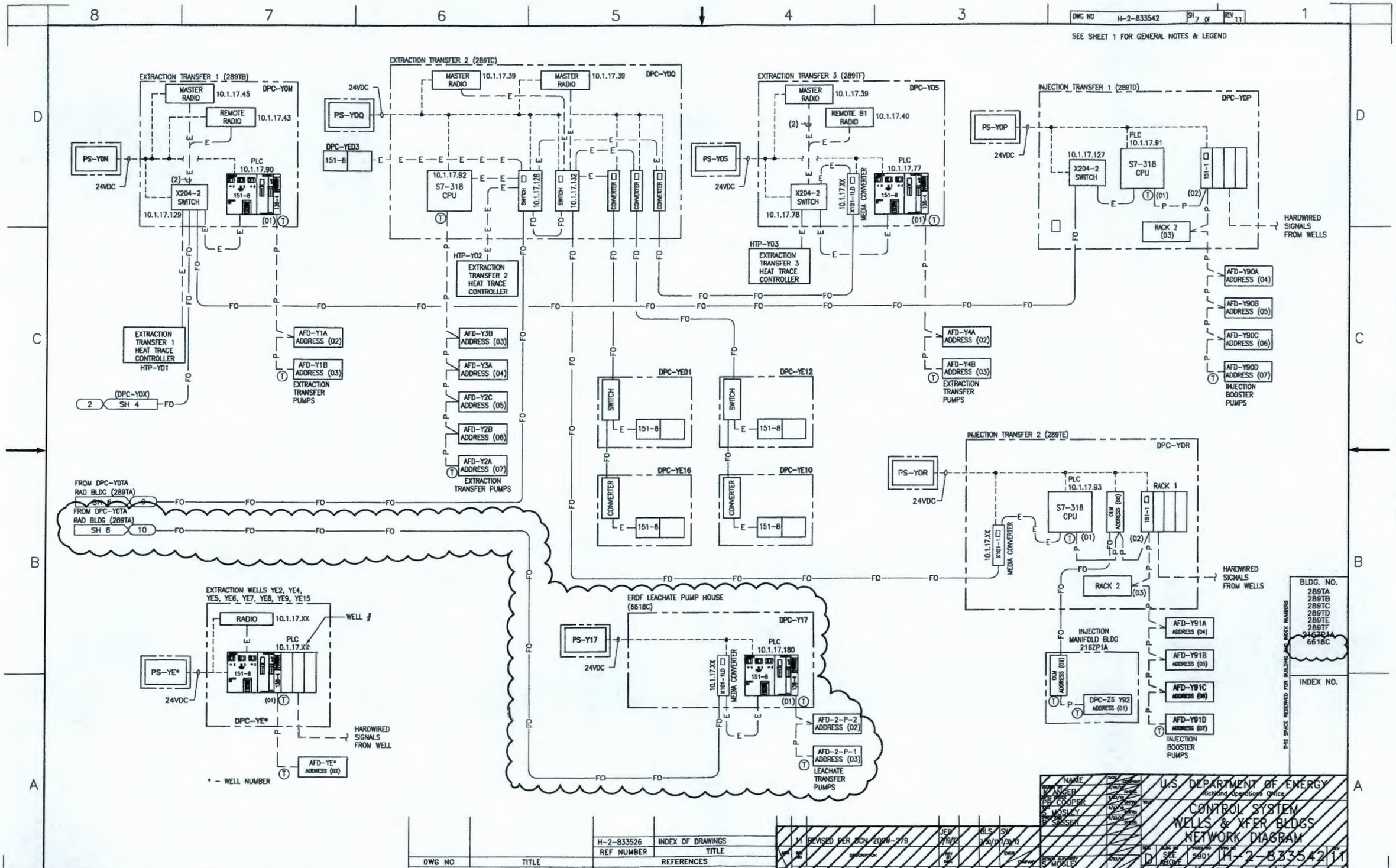

ECR-14-000762 Page 43

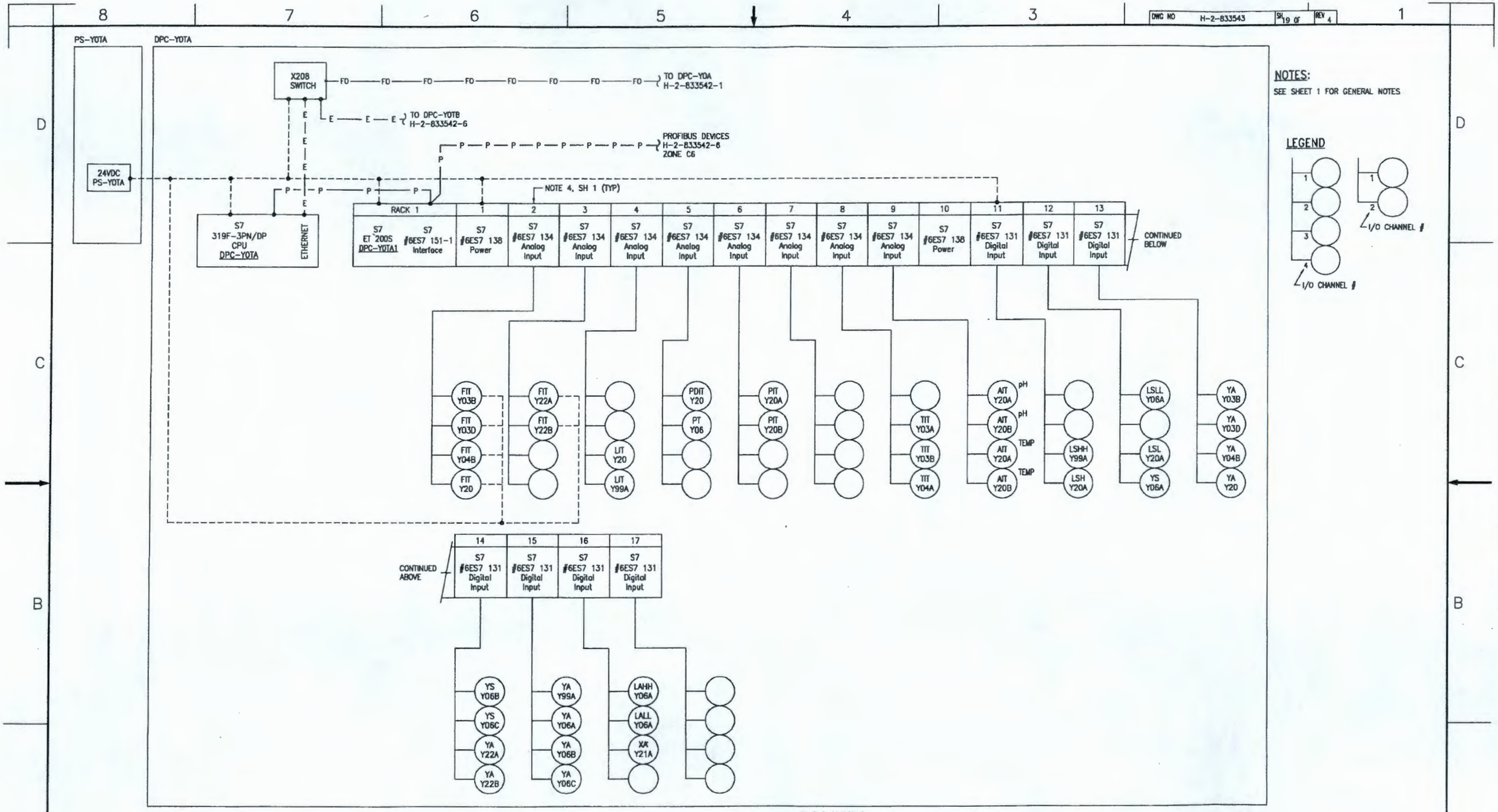

NOTES:

SEE SHEET 1 FOR GENERAL NOTES

LEGEND

I/O CHANNEL #

I/O CHANNEL #

DWG NO	TITLE
DRAWING TRACEABILITY LIST	

REF NUMBER	TITLE
H-2-833526	INDEX OF DRAWINGS
REFERENCES	
NEXT USED ON	

REV	DESCRIPTION	DRAWN	CHECKED	DATE
4	REVISED PER ECR-14-001163	ERW		10/8/14
3	REVISED PER DCN-200W-279	MJB	BLS	9/24/08 SW 7/31/12

REVISIONS

NAME	DATE
W ANGER	
PR COOPER	
E MOSLEY	
E SASSEN	
MOSLEY	

U.S. DEPARTMENT OF ENERGY
Richland Operations Office

CONTROL SYSTEM
200W PUMP & TREAT
I/O DIAGRAM DPC-Y0TA

SIZE	CODE IDENT	SCALE	DRAWING NO	REV
D	26BTA	5808	H-2-833543	4

NONE DCN-200W-108 SHEET 19

XXXX PLOTID XXXX

ECR-14-000762 Page 44
"WAS CONDITION"

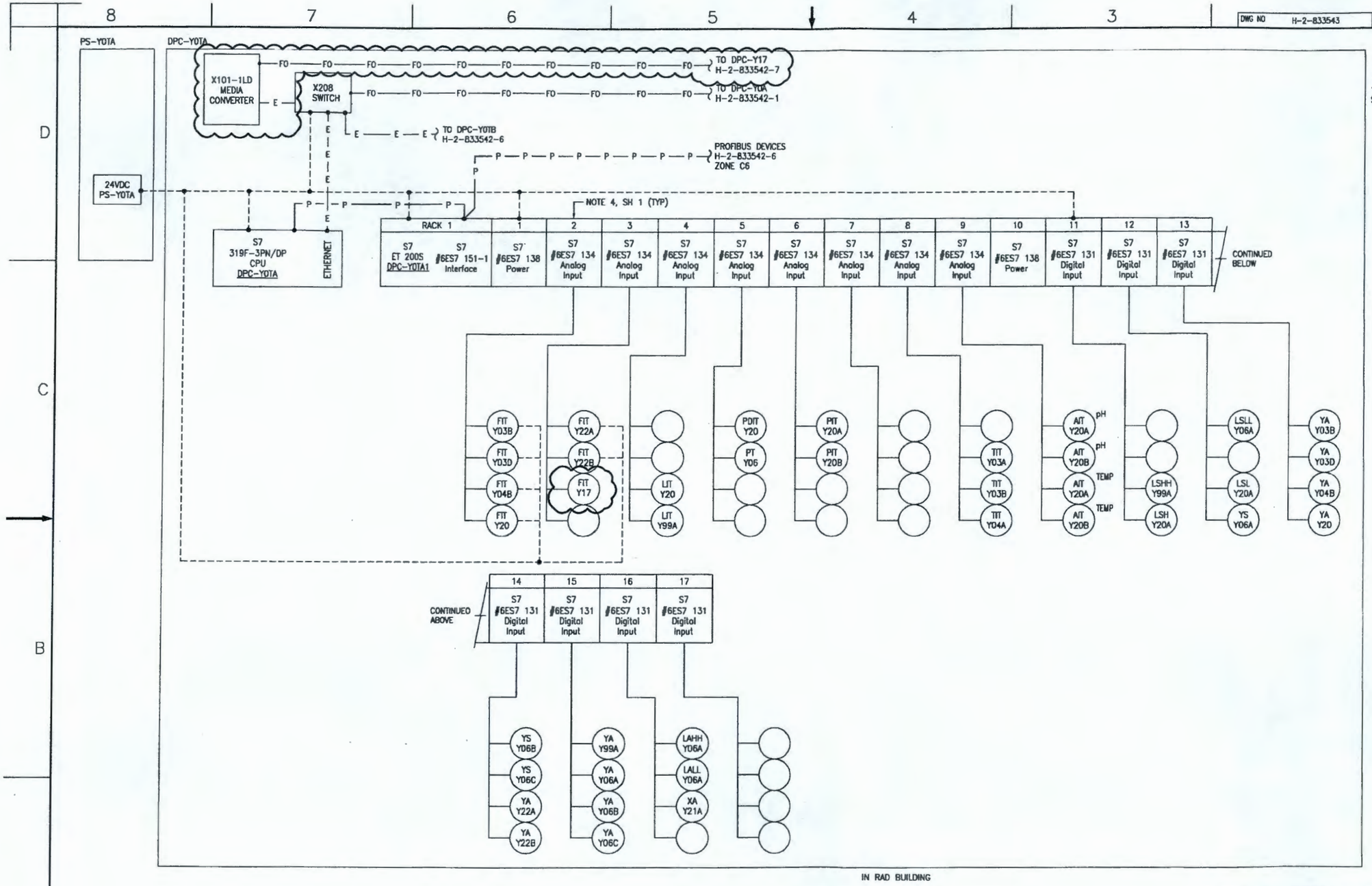

NOTES:

SEE SHEET 1 FOR GENERAL NOTES

LEGEND

I/O CHANNEL #

I/O CHANNEL #

DWG NO	TITLE
DRAWING TRACEABILITY LIST	

REF NUMBER	TITLE
H-2-833526	INDEX OF DRAWINGS

NEXT USED ON	REFERENCES

REV	DESCRIPTION	BY	CHK	DATE
4	REVISED PER ECR-14-001163	ERW	WJR	10/8/14
3	REVISED PER DCN-200W-279	BLS	SW	7/31/12

REVISIONS

NAME	DATE
D. ANGER	
H. COOPER	
S. MOSLEY	
S. SASSEN	
S. MOSLEY	

U.S. DEPARTMENT OF ENERGY
Richland Operations Office

CONTROL SYSTEM
200W PUMP & TREAT
I/O DIAGRAM DPC-Y0TA

D 28B1A 560B H-2-833543 4

SCALE NONE SEQ OCN-200W-10E SHEET 19 OF

ECR-14-000762 Page 45

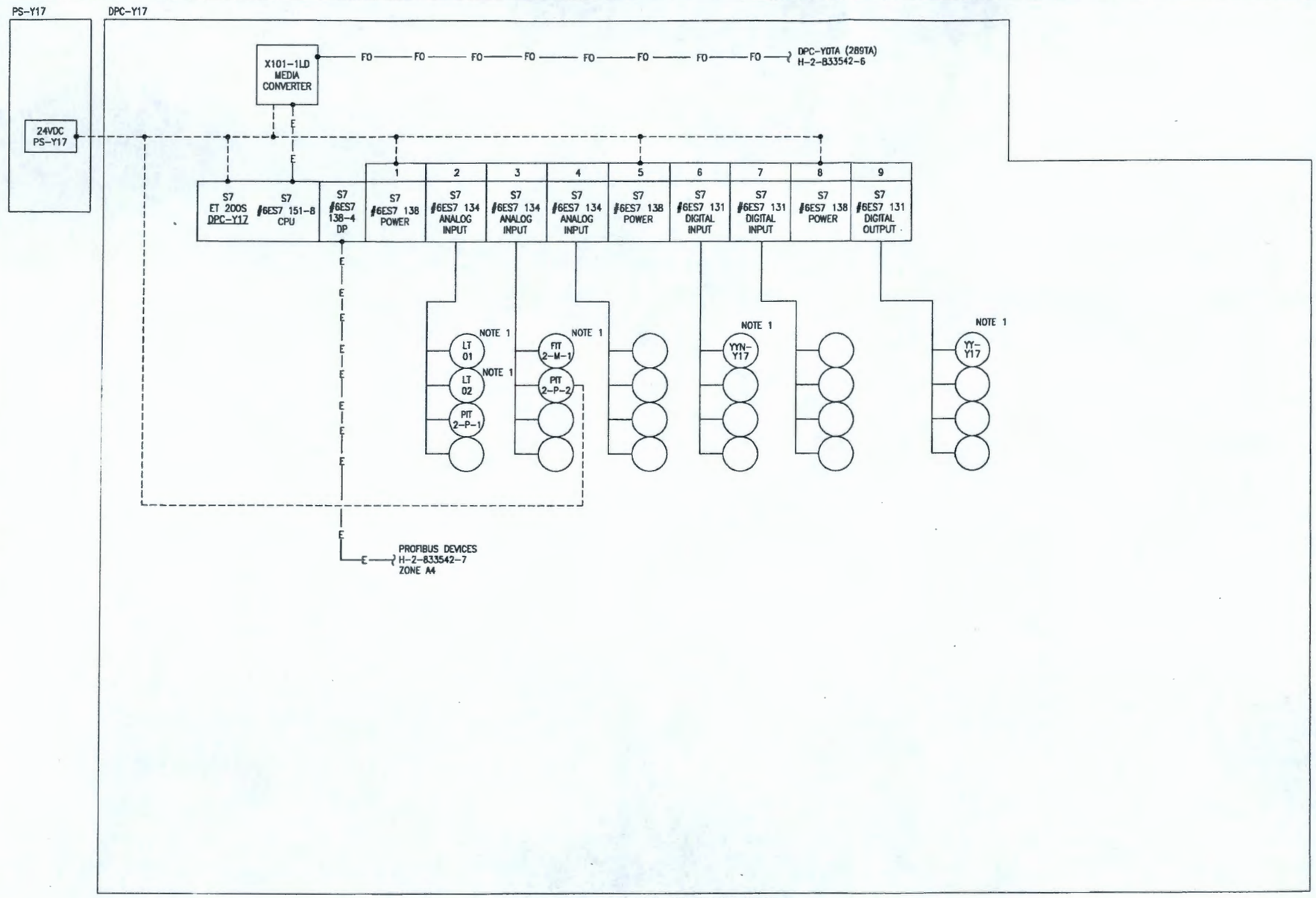

NOTES:

SEE SHEET 1 FOR GENERAL NOTES

1. SIGNALS COME FROM SIGNAL TELEMETRY CONTROL PANEL.

ECR-14-000762 Page 44

DWG NO	TITLE	REF NUMBER	TITLE
		H-2-833526	INDEX OF DRAWINGS

DRAWING TRACEABILITY LIST — REFERENCES — NEXT USED ON

REV	DESCRIPTION	REV BY DATE	CHKD	COMPANY
0	INITIAL RELEASE PER ECR-14-000762			

REVISIONS

NAME	DATE	COMPANY
DRAWN BY JJ AMMERMAN	12/2014	CHPRC
PROJ ENG		
DESIGN AUTHORITY		

U.S. DEPARTMENT OF ENERGY
Richland Operations Office

TITLE: CONTROL SYSTEM ERDF LEACHATE I/O DIAGRAM DPC-Y17

SIZE	BLDG NO	INDEX NO	DWG NO	REV
D	289TC 5618C	5908	H-2-833543	0

SCALE NONE — ECR-14-000762 — SHEET 31 OF

XXXX PLOTID XXXX

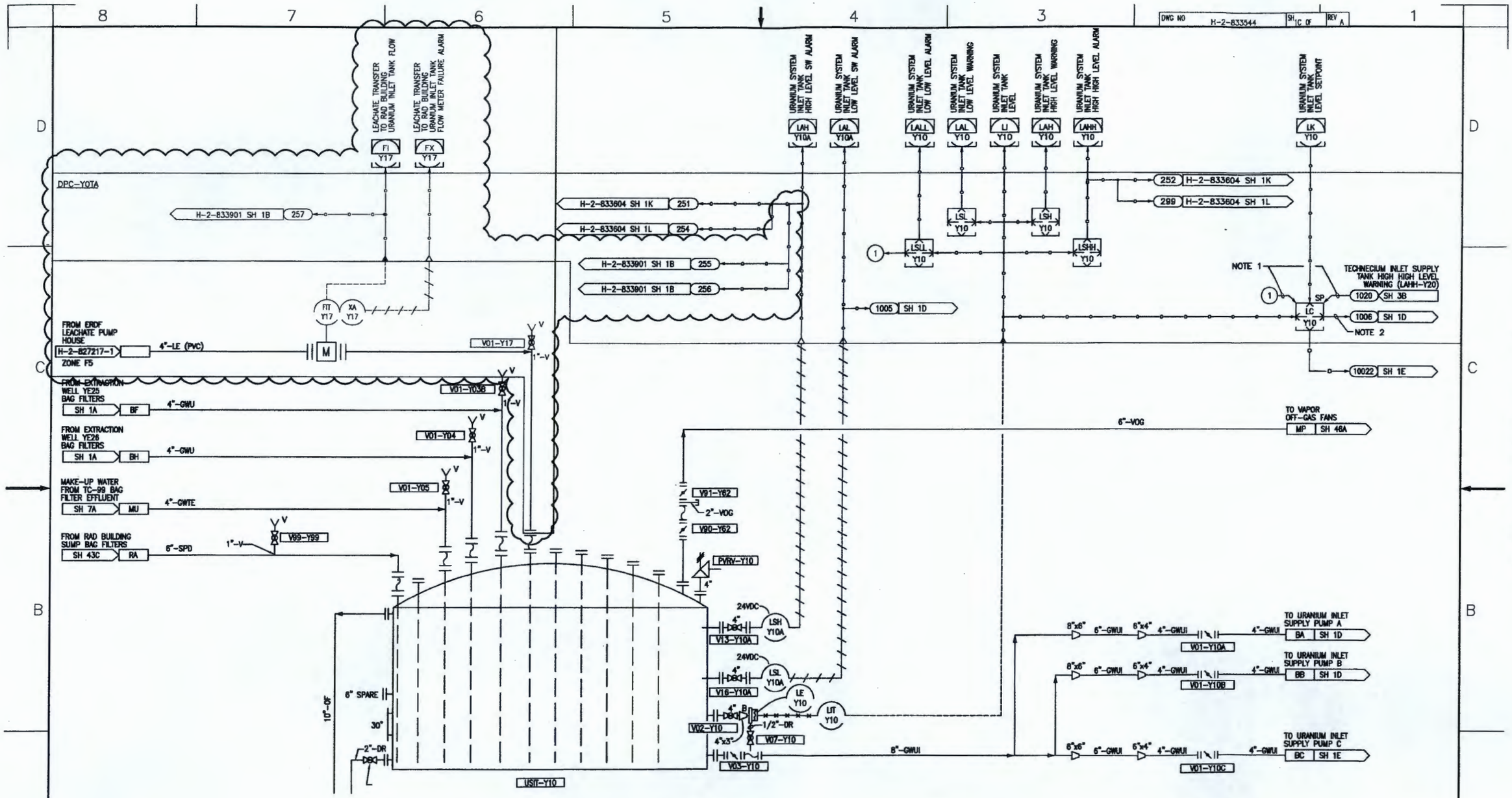

NOTES:

1. IF THE URANIUM INLET TANK LOW LOW LEVEL WARNING OR THE TECHNECIUM SYSTEM INLET TANK HIGH HIGH LEVEL WARNING OCCURS, THE URANIUM INLET SUPPLY PUMPS RAMP THEIR SPEEDS DOWN TO THE MINIMUM VALUE. THE PUMPS AUTOMATICALLY RESUME LEVEL CONTROL WHEN THE URANIUM INLET TANK RISES ABOVE THE LOW LEVEL WARNING OR THE EQUALIZATION TANK DROPS BELOW THE HIGH LEVEL WARNING.

2. THERE IS A MAXIMUM AFD SPEED LIMIT ON THE LEVEL CONTROLLER SET TO LIMIT THE FLOW TO LESS THAN 400 GPM.

DWG NO	TITLE	REF NUMBER	TITLE
DRAWING TRACEABILITY LIST		NEXT USED ON	REFERENCES

REVISIONS

U.S. DEPARTMENT OF ENERGY
Richland Operations Office

P&IDS
RAD BLDG
URANIUM SYSTEM INLET TANK

D XXX XXXX H-2-833544

SCALE NONE ECR-14-000762 1C 0

XXXX PLOTID XXXX

ECR-14-000762 Page 47
SKETCH-1

DWG NO H-2-833546 SH 5 OF REV 3

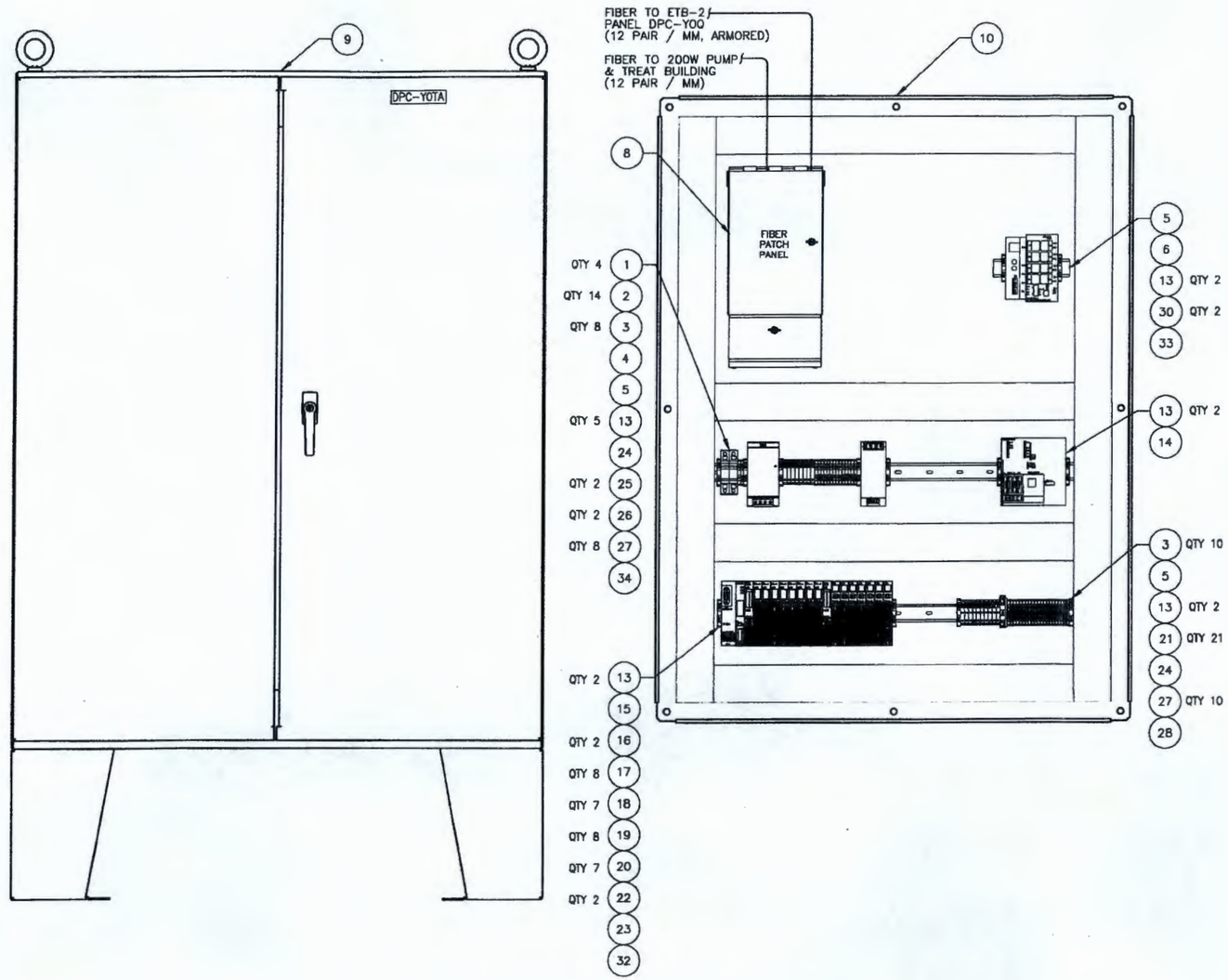

DPC-YOTA RAD BUILDING ENCLOSURE

SCALE: NTS

ITEM	QTY	PART NUMBER	MANUFACTURER	COMMENTS
1	4	1492-JG4	ALLEN-BRADLEY	GROUNDING TERMINAL BLOCK
2	14	1492-J4B	ALLEN-BRADLEY	TERMINAL BLOCK-BLUE
3	18	1492-WFB424	ALLEN-BRADLEY	LOW VOLTAGE FUSED TERMINAL BLOCKS
4	1	2866213	PHOENIX CONTACT	24 VDC BUFFER/UPS
5	AR	199-DR1	ALLEN-BRADLEY	DIN RAIL
6	1	6GK5208-0BA10-2AA3	SIEMENS	NETWORK SWITCH 8PORT
7	1	CN-CCH-CP12-25T	CORNING CABLE	12 ST FIBER ADAPTERS
8	1	WCH-02P	CORNING CABLE	WALL MOUNT FIBER PATCH PANEL
9	1	A54420BLP	HOFFMAN	FREE STANDING ENCLOSURE
10	1	A54P42	HOFFMAN	BACK PANEL
11	28'	TY-DUCT/TY3X3NPG6	THOMAS & BETTS	WIRE DUCK 2X3 INCH GRAY
12	28'	TY30PG6	THOMAS & BETTS	DUCT COVER 3 INCH GRAY
13	13	1492-EAJ35	ALLEN-BRADLEY	END ANCHORS
14	1	6ES7318-3FL010AB0	SIEMENS	SIMATIC S7-200 CPU
15	1	6ES7151-1AA050AB0	SIEMENS	SIMATIC ET 200S INTERFACE
16	2	6ES7138-4CA010AA0	SIEMENS	SIMATIC ET 200 POWER ADAPTER
17	8	6ES7134-4GD000AB0	SIEMENS	SIMATIC ET 200 4 PT ANALOG INPUT
18	7	6ES7131-4BD010AA0	SIEMENS	SIMATIC ET 200 4 PT DC INPUT
19	8	6ES7193-4CA500AA0	SIEMENS	AI TERMINAL MODULE
20	7	6ES7193-4CB300AA0	SIEMENS	DI TERMINAL MODULE
21	21	1492-J4G	ALLEN-BRADLY	TERMINAL BLOCK-GREEN
22	2	6ES7193-4CE100AA0	SIEMENS	POWER TERMINAL MODULE
23	1	6ES7953-8LP200AA0	SIEMENS	8MB MEMORY CARD FOR S7-300 CPU
24	3	1492-CJLJ6-10	ALLEN-BRADLEY	10 PIN TERMINAL JUMPERS
25	2	1492-SJFB8-10	ALLEN-BRADLEY	10 PIN SIDE FUSE TERMINAL JUMPERS
26	2	1489-A1C050	ALLEN-BRADLEY	5A 1 POLE CIRCUIT BREAKER
27	17	BK/GMA-1-R	BUSSMAN	1A 250V MINIATURE FUSE
28	1	1492-J10	ALLEN-BRADLEY	TERMINAL BLOCK-GREEN
29	1	6ES7390-1AB600AA0	SIEMENS	MOUNTING RAIL S7-200
30	8	6GK1901-1BB102AA0	SIEMENS	ETHERNET CONNECTOR
31	9'	6XV1840ZAH10	SIEMENS	EHTERNET CABLE
32	3	6ES7972-0BB420XA0	SIEMENS	PROFIBUS CONNECTORS
33	1	6GK5101-1BB00-2AA3	SIEMENS	SCALENCEX101-1 ETHERNET MEDA CONVERTER
34	1	QUINTDIODE/12-24DC-2X2Q-1X40	PHOENIX CONTACT	DIN RAIL DIODE MODULE

NOTES:

1. FOR I/O REQUIREMENTS SEE THE SPECIFICATIONS, I/O LIST.
2. PANEL NAMEPLATE INSCRIPTION:
   DPC-YOTA

DWG NO	TITLE
DRAWING TRACEABILITY LIST	

REF NUMBER	TITLE
H-2-833526	INDEX OF DRAWINGS
NEXT USED ON	REFERENCES

REV	DESCRIPTION	DATE	DRAWN	CHK	APP	ENGR AUTHORITY
3	REVISED PER ECR-14-000762	10/14	ERW			
2	REVISED PER DCN-200W-325	3/12	JED	DLS	SRW	
1	REVISED PER DCN-200W-341	1/20/12	BEM	DLS	SRW	

REVISIONS

NAME
K. BRISTER
G. DAVIS
S. DAVIS
R. SASSER
R. HANKS
RAMSO

U.S. DEPARTMENT OF ENERGY
Richland Operations Office

CONTAINER SYSTEM
RAD BUILDING
SYSTEM IDENTIFIERS

D 2800M 0901 5981 H-2-833546 3

SCALE AS NOTED DCN-200W-036

ECR-14-000762 Page 48
"WAS CONDITIONON"

DWG NO H-2-833546 SH 5 OF REV 3

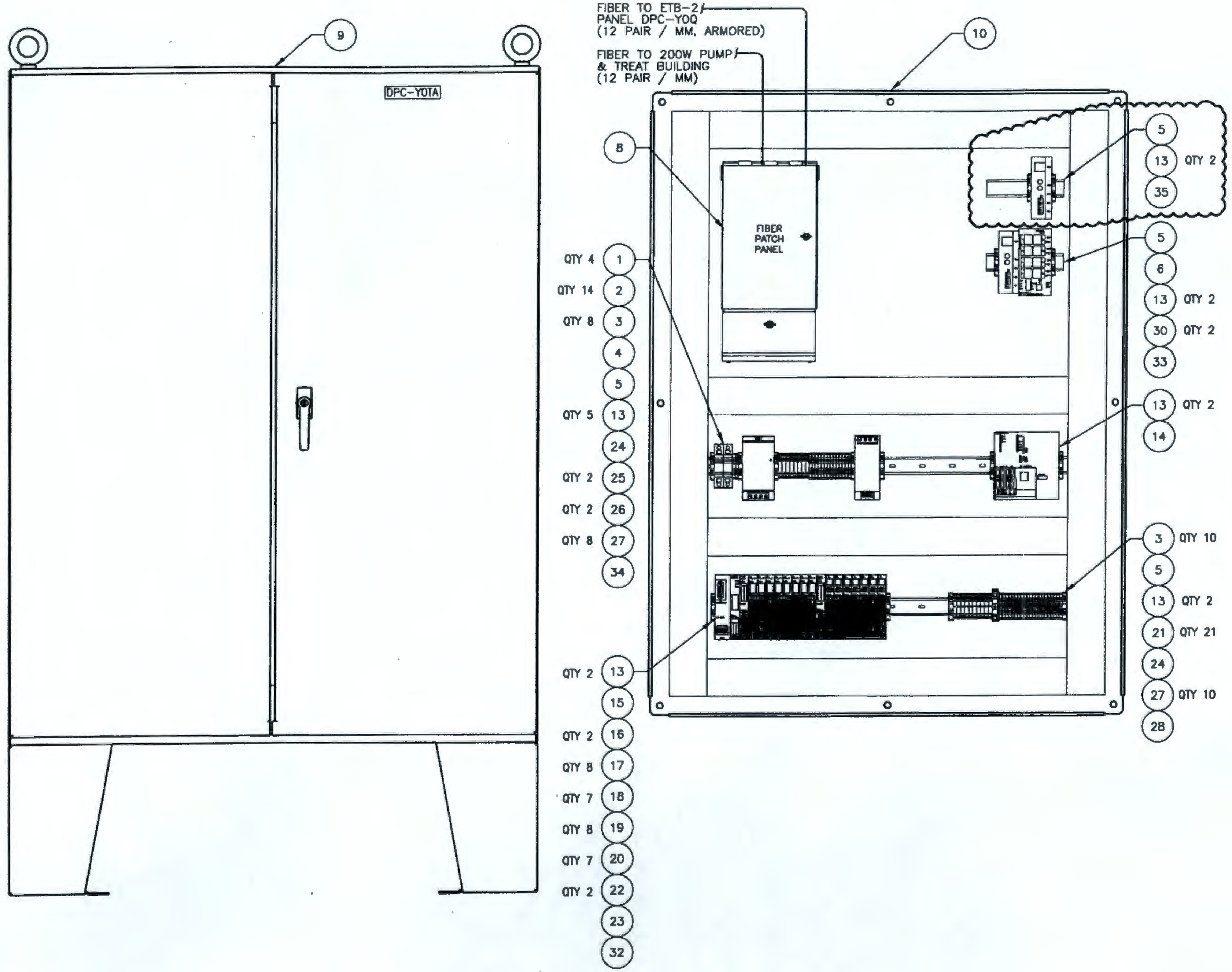

DPC-YOTA RAD BUILDING ENCLOSURE

SCALE: NTS

ITEM	QTY	PART NUMBER	MANUFACTURER	COMMENTS
1	4	1492-JG4	ALLEN-BRADLEY	GROUNDING TERMINAL BLOCK
2	14	1492-J4B	ALLEN-BRADLEY	TERMINAL BLOCK-BLUE
3	18	1492-WFB424	ALLEN-BRADLEY	LOW VOLTAGE FUSED TERMINAL BLOCKS
4	1	2866213	PHOENIX CONTACT	24 VDC BUFFER/UPS
5	AR	199-DR1	ALLEN-BRADLEY	DIN RAIL
6	1	6GK5208-0BA10-2AA3	SIEMENS	NETWORK SWITCH 8PORT
7	1	CN-CCH-CP12-25T	CORNING CABLE	12 ST FIBER ADAPTERS
8	1	WCH-02P	CORNING CABLE	WALL MOUNT FIBER PATCH PANEL
9	1	A544208LP	HOFFMAN	FREE STANDING ENCLOSURE
10	1	A54P42	HOFFMAN	BACK PANEL
11	28'	TY-DUCT/TY3X3NPG6	THOMAS & BETTS	WIRE DUCK 2X3 INCH GRAY
12	28'	TY3OPG6	THOMAS & BETTS	DUCT COVER 3 INCH GRAY
13	15	1492-EAJ35	ALLEN-BRADLEY	END ANCHORS
14	1	6ES7318-3FL01DAB0	SIEMENS	SIMATIC S7-200 CPU
15	1	6ES7151-1AA050AB0	SIEMENS	SIMATIC ET 200S INTERFACE
16	2	6ES7138-4CA010AA0	SIEMENS	SIMATIC ET 200 POWER ADAPTER
17	8	6ES7134-4GD000AB0	SIEMENS	SIMATIC ET 200 4 PT ANALOG INPUT
18	7	6ES7131-4BD010AA0	SIEMENS	SIMATIC ET 200 4 PT DC INPUT
19	8	6ES7193-4CA500AA0	SIEMENS	AI TERMINAL MODULE
20	7	6ES7193-4CB300AA0	SIEMENS	DI TERMINAL MODULE
21	21	1492-J4G	ALLEN-BRADLY	TERMINAL BLOCK-GREEN
22	2	6ES7193-4CE100AA0	SIEMENS	POWER TERMINAL MODULE
23	1	6ES7953-8LP200AA0	SIEMENS	8MB MEMORY CARD FOR S7-300 CPU
24	3	1492-CJLJ6-10	ALLEN-BRADLEY	10 PIN TERMINAL JUMPERS
25	2	1492-SJFB8-10	ALLEN-BRADLEY	10 PIN SIDE FUSE TERMINAL JUMPERS
26	2	1489-A1C050	ALLEN-BRADLEY	5A 1 POLE CIRCUIT BREAKER
27	17	BK/GMA-1-R	BUSSMAN	1A 250V MINIATURE FUSE
28	1	1492-J10	ALLEN-BRADLEY	TERMINAL BLOCK-GREEN
29	1	6ES7390-1AB600AA0	SIEMENS	MOUNTING RAIL S7-200
30	8	6GK1901-1BB102AA0	SIEMENS	ETHERNET CONNECTOR
31	9'	6XV18402AH10	SIEMENS	EHTERNET CABLE
32	3	6ES7972-0BB420XA0	SIEMENS	PROFIBUS CONNECTORS
33	1	6GK5101-1BB00-2AA3	SIEMENS	SCALENCE X101-1 ETHERNET MEDA CONVERTER
34	1	QUINTDIODE/12-24DC-2X20-1X40	PHOENIX CONTACT	DIN RAIL DIODE MODULE
35	1	6GK5101-1BC00-2AA3	SIEMENS	SCALENCE X101-1LD ETHERNET MEDA CONVERTER

NOTES:

1. FOR I/O REQUIREMENTS SEE THE SPECIFICATIONS, I/O LIST.
2. PANEL NAMEPLATE INSCRIPTION:
   DPC-YOTA

DWG NO	TITLE
DRAWING TRACEABILITY LIST	

REF NUMBER	TITLE
H-2-833526	INDEX OF DRAWINGS
REFERENCES	
NEXT USED ON	

REVISIONS

NO	DESCRIPTION	REV BY DATE		
3	REVISED PER ECR-14-001163	ERW 10/9/14		
2	REVISED PER DCN-200W-325	GED 3/20/12	BLS 3/21/12	SRW 3/21/12
1	REVISED PER DCN-200W-341		BLS	SRW

NAME: R KRISTEL; G DAVIS; G DAVIS; P SASSER; R HANKS; DESIGN AUTHORITY RAMBO

U.S. DEPARTMENT OF ENERGY
Richland Operations Office

CONTROL SYSTEM
RAD BUILDING
PANEL DPC-YOTA

SIZE D | BLDG NO 288TA | INDEX NO 7501 5901 | DWG NO H-2-833546 | REV 3

SCALE AS NOTED | DCN-200W-030 | SHEET 5

ECR-14-000762 Page 49

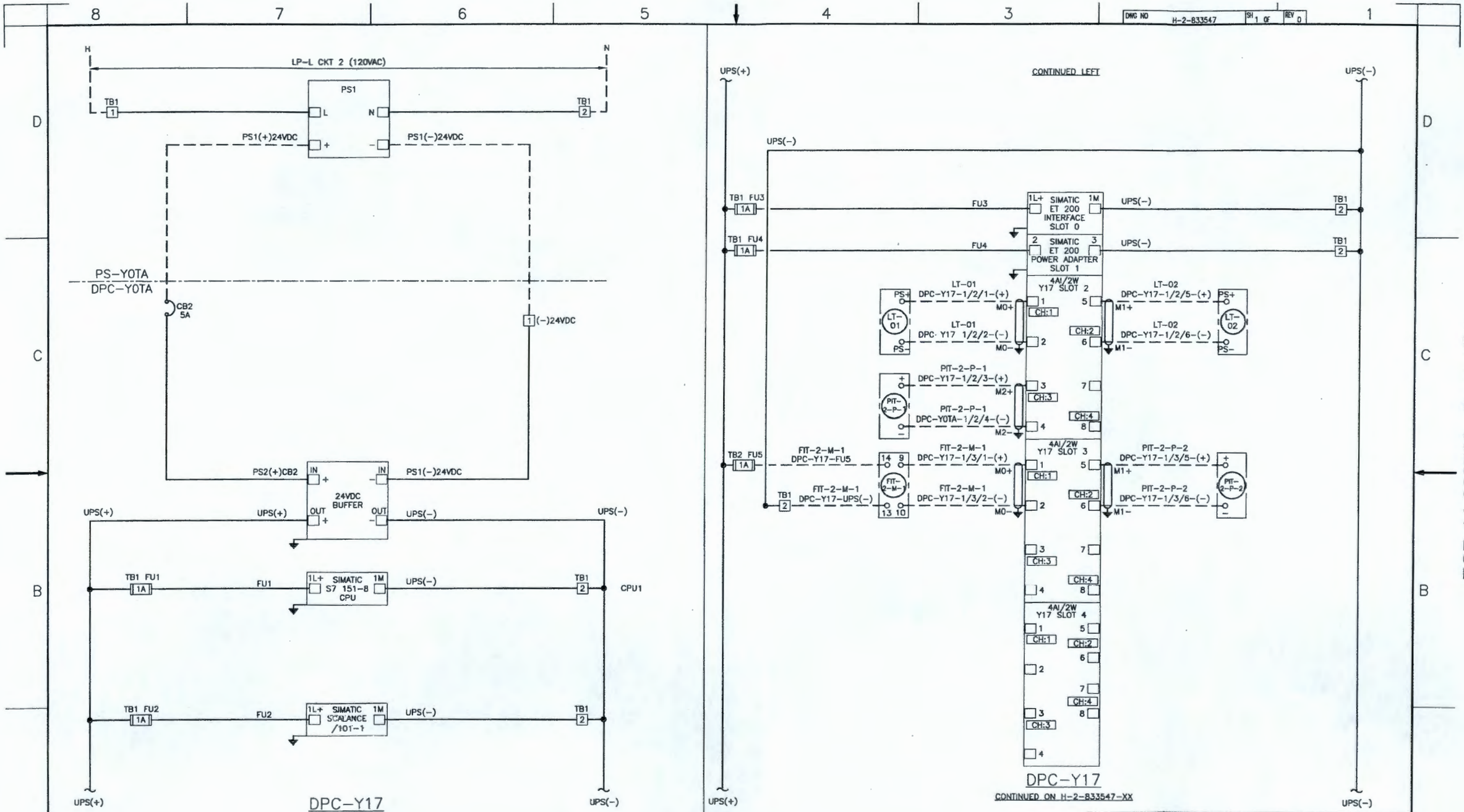

DWG NO	TITLE	REFERENCES	NEXT USED ON
		H-2-833526	INDEX OF DRAWINGS
		REF NUMBER	TITLE

DRAWING TRACEABILITY LIST

REV NO	DESCRIPTION	REV BY DATE	ENGR COMPANY
0	INITIAL RELEASE PER ECR-14-000762		

REVISIONS

NAME	DATE	COMPANY
DRAWN BY JJ AMMERMAN	12/2014	CHPRC
DRAWING APPROVAL		
ENGINEERING MANAGER		
DESIGN AUTHORITY		

U.S. DEPARTMENT OF ENERGY
Richland Operations Office

TITLE CONTROL SYSTEM WIRING DIAGRAM DPC-Y17

SIZE	BLDG NO	INDEX NO	DWG NO	REV
D	6618C	7502	H-2-833547	0

SCALE NONE SUPT ECR-14-000762 SHEET 1 OF

XXXX PLOTID XXXX

ECR-14-000762 Page 50

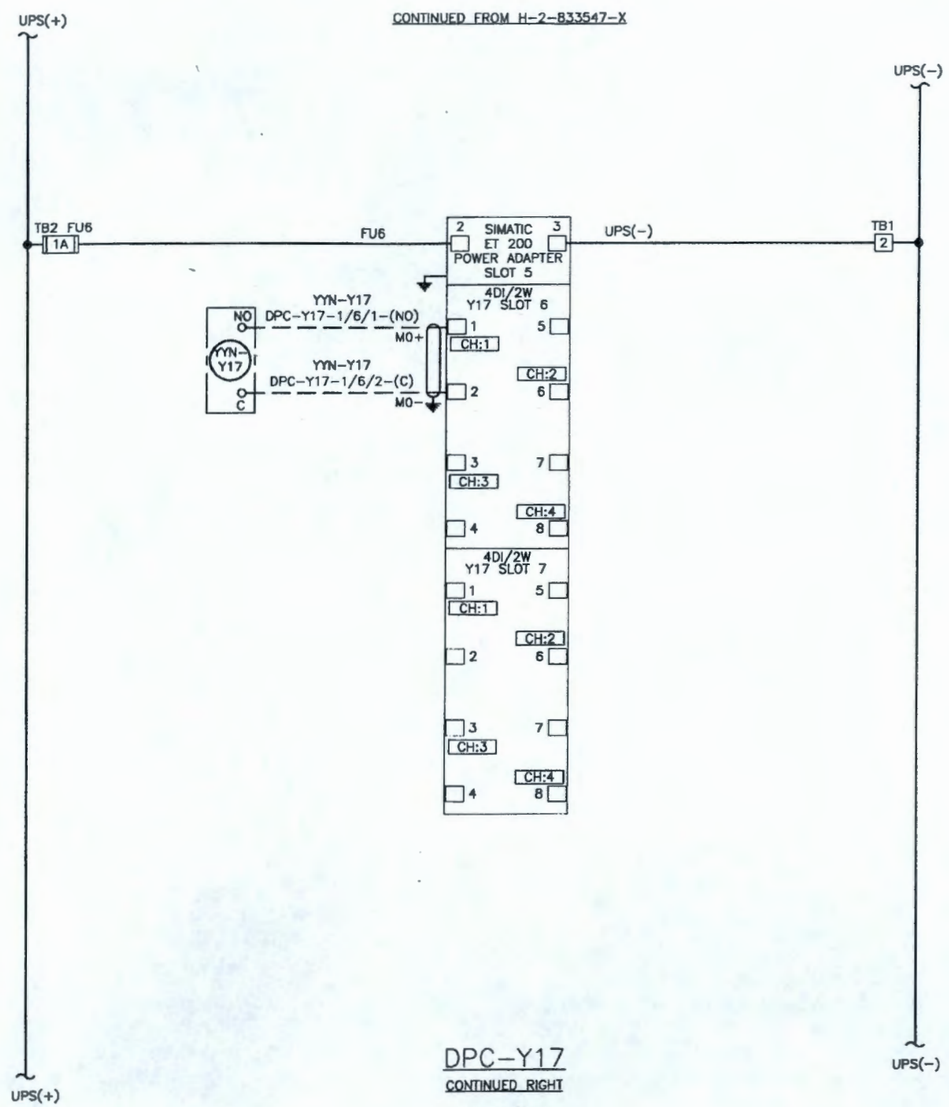

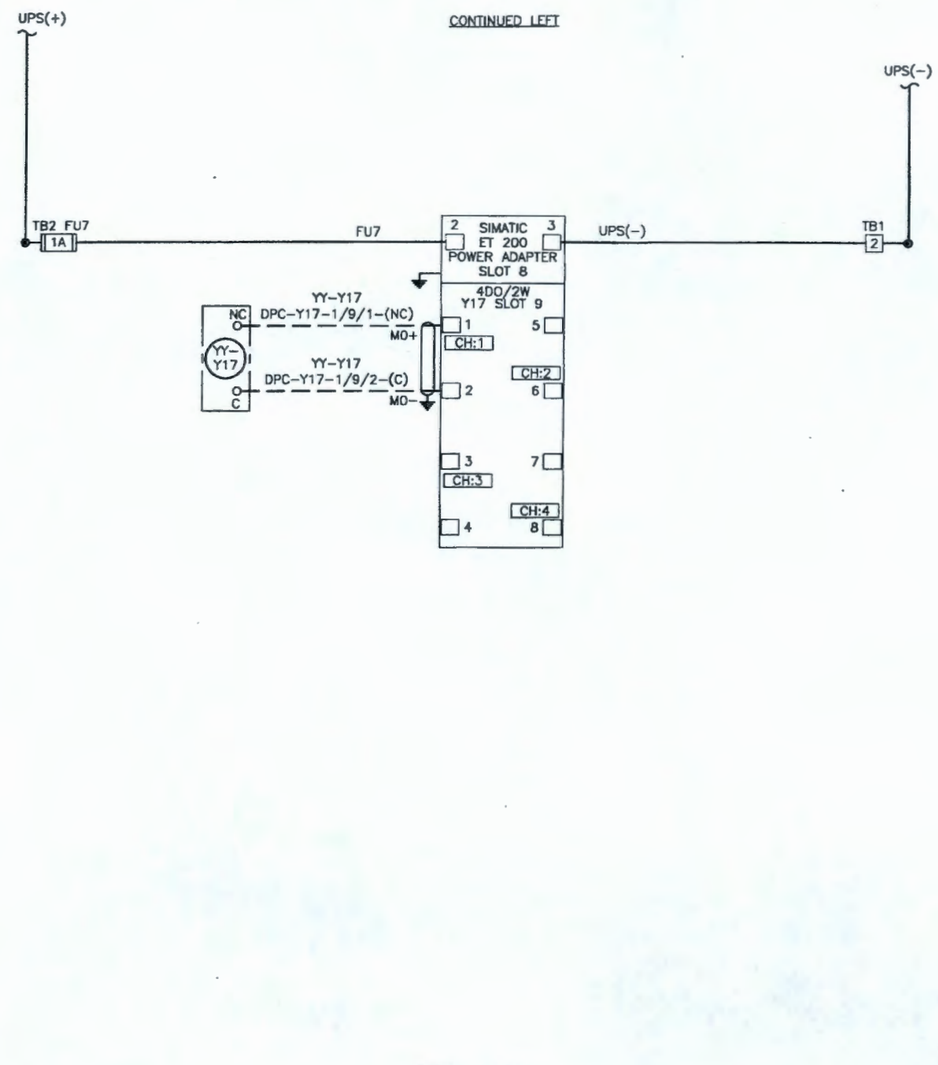

DWG NO	TITLE	REF NUMBER	TITLE
		H-2-833526	INDEX OF DRAWINGS
DRAWING TRACEABILITY LIST		REFERENCES	
		NEXT USED ON	

REV NO	DESCRIPTION	REV BY DATE			ENGR COMPANY
0	INITIAL RELEASE PER ECR-14-000762				

REVISIONS

	NAME	DATE	COMPANY
DRAWN BY / DRAFTING APPROVAL	JJ AMMERMAN		
ENG			
ENGINEERING MANAGER			
DESIGN AUTHORITY			

U.S. DEPARTMENT OF ENERGY
Richland Operations Office

TITLE
CONTROL SYSTEM
WIRING DIAGRAM
DPC-Y17

SIZE	BLDG NO	INDEX NO	DWG NO	REV
D	661BC	7502	H-2-833547	0

SCALE NONE ECR-14-000762 SHEET 2 OF

XXXX PLOTTED XXXX

ECR-14-000762 Page 51

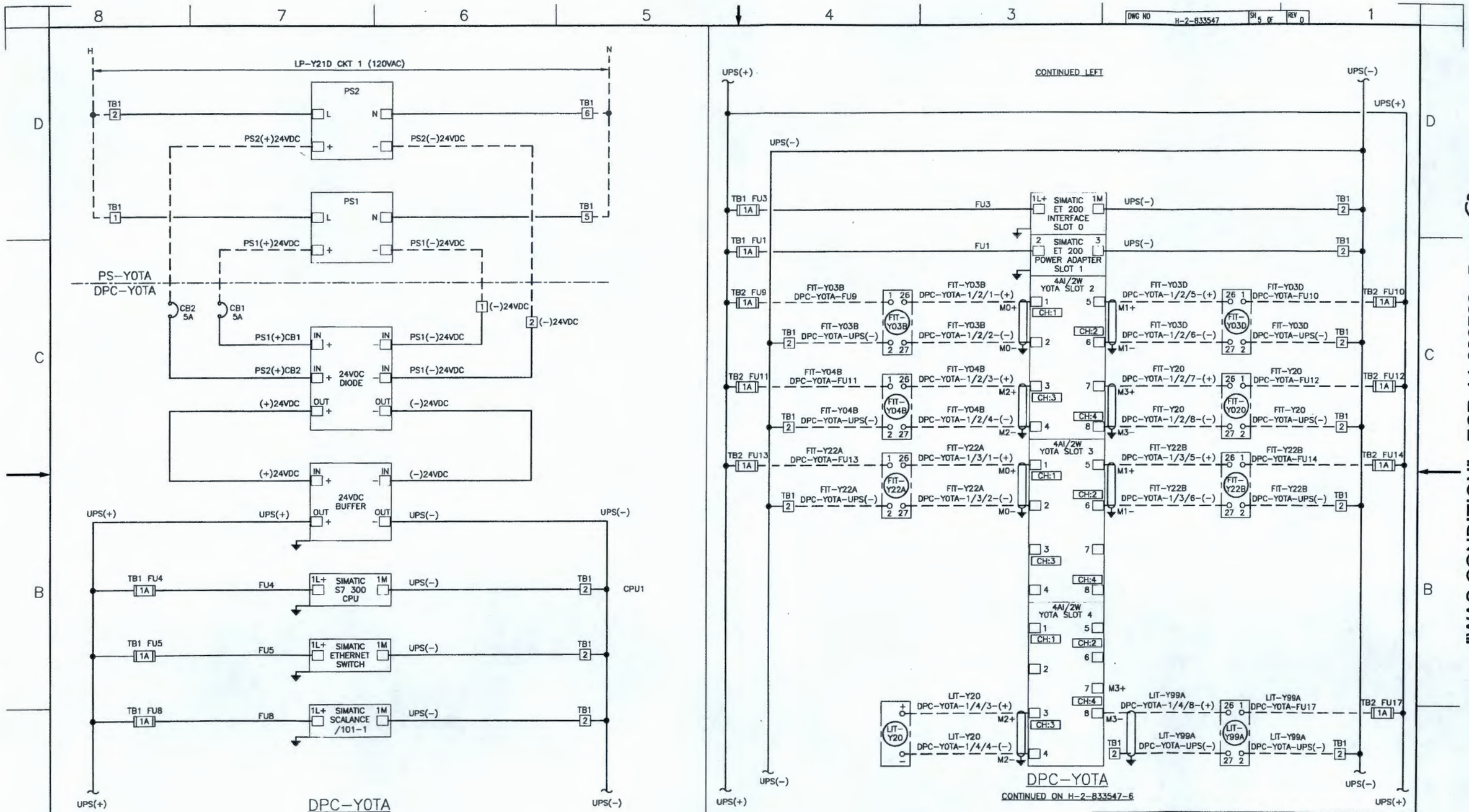

"WAS CONDITION" ECR-14-000762 Page 52

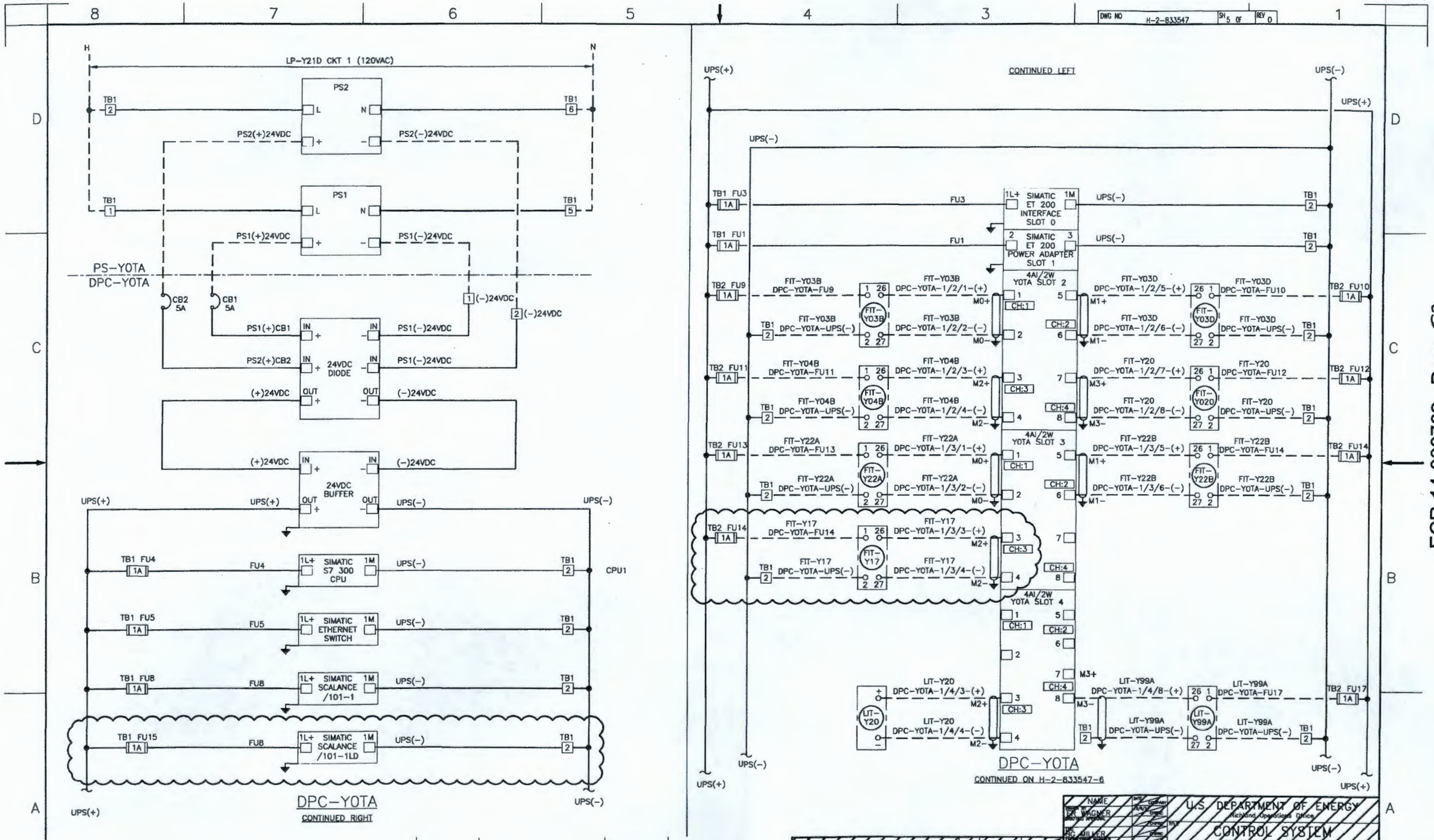

ECR-14-000762 Page S3

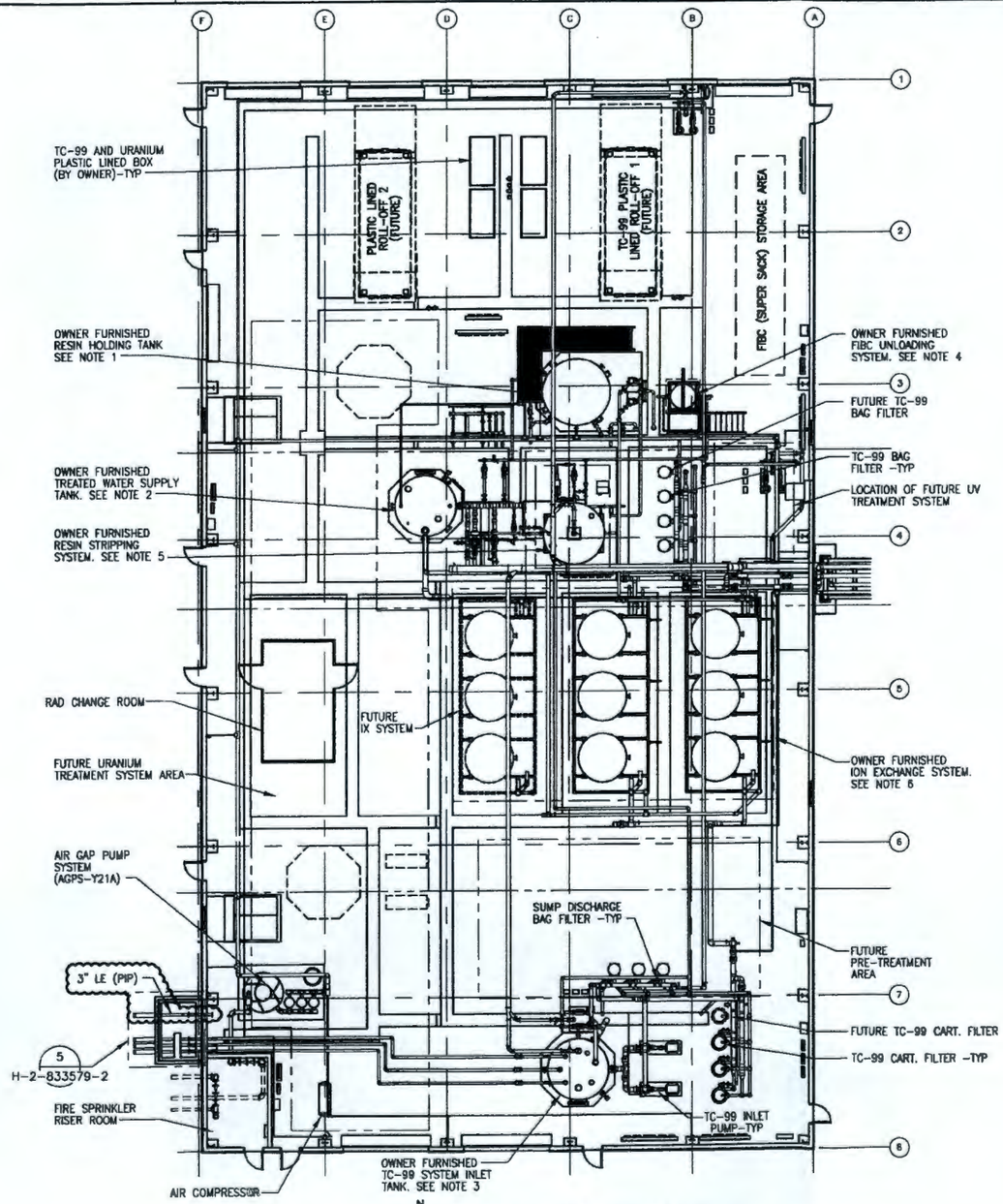

N

OVERALL MECHANICAL PLAN

3/32"=1'-0"

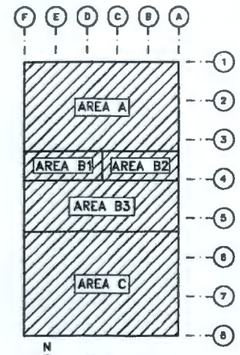

N

KEY PLAN

OWNER-FURNISHED EQUIPMENT AND SYSTEMS

1. **RESIN HOLDING TANK (RHT-Y87)**
   FRP OPEN TOP TANK, INCLUDING ALL FLANGED NOZZLES, IS OWNER- FURNISHED. CONTRACTOR SHALL INSTALL TANK PER MANUFACTURER'S INSTRUCTIONS, CONNECT ALL PIPING AS SHOWN AND INSTALL ALL INSTRUMENTS AND OTHER APPURTENANCES AS SHOWN. CONTRACTOR SHALL INSTALL TWO OWNER-FURNISHED 4-INCH STAINLESS STEEL NOZZLE HEADERS INSIDE TANK BETWEEN FLANGES PROVIDED WITH TANK, USING FLANGED COUPLING ADAPTERS PROVIDED WITH HEADERS. ORIENT BOTH NOZZLE HEADER POINTED DOWNWARD. USE TYPE 304 OR 316 STAINLESS STEEL FASTNERS. DO NOT OVER TIGHTEN BOLTS.

2. **TREATED WATER SUPPLY TANK (TWT-Y81)**
   FRP TANK, INCLUDING ALL FLANGED NOZZLES, IS OWNER-FURNISHED. CONTRACTOR SHALL INSTALL TANK PER MANUFACTURER'S INSTRUCTIONS, CONNECT ALL PIPING AS SHOWN AND INSTALL ALL INSTRUMENTS AND OTHER APPURTENANCES AS SHOWN.

3. **TC-99 SYSTEM INLET TANK (TCSIT-Y20)**
   FRP TANK, INCLUDING ALL FLANGED NOZZLES, IS OWNER-FURNISHED. CONTRACTOR SHALL INSTALL TANK PER MANUFACTURER'S INSTRUCTIONS, CONNECT ALL PIPING AS SHOWN AND INSTALL ALL INSTRUMENTS AND OTHER APPURTENANCES AS SHOWN.

4. **FIBC UNLOADING SYSTEM**
   SKID-MOUNTED FIBC UNLOADING SYSTEM, INCLUDING COATED STEEL HOPPER, HOIST. TROLLEY AND MONORAIL, SUPPORT FRAMEWORK, EDUCATOR, VALVES AND ALL PIPING TO LIMITS SHOWN IS OWNER FURNISHED. CONTRACTOR SHALL INSTALL SYSTEM PER MANUFACTURER'S INSTRUCTIONS AND CONNECT ALL PIPING AS SHOWN.

5. **RESIN STRIPPING SYSTEM**
   SKID-MOUNTED SPENT RESIN STRIPPING SYSTEM, INCLUDING STAINLESS STEEL TANK, BLOWER, PUMP, HEATER, CONDENSER, MIST ELIMINATOR, INSTRUMENTS AND ALL PIPING TO LIMITS SHOWN, IS OWNER FURNISHED. CONTRACTOR SHALL INSTALL SYSTEM PER MANUFACTURER'S INSTRUCTIONS, CONNECT ALL PIPING AS SHOWN, AND CONNECT POWER SUPPLY RACEWAYS AND CONDUCTORS AND INSTRUMENTATION WIRING AS SHOWN ON ELECTRICAL DRAWINGS.

6. **ION EXCHANGE SYSTEM**
   SKID-MOUNTED ION EXCHANGE SYSTEMS (2), INCLUDING COATED STEEL VESSELS, APPURTENANCES, INSTRUMENTS AND ALL PIPING TO LIMITS SHOWN, ARE OWNER-FURNISHED. CONTRACTOR SHALL INSTALL SYSTEMS PER MANUFACTURER'S INSTRUCTIONS, CONNECT ALL PIPING AS SHOWN, AND CONNECT POWER SUPPLY RACEWAYS AND CONDUCTORS AND INSTRUMENTATION WIRING AS SHOWN ON ELECTRICAL DRAWINGS.

DWG NO	TITLE
DRAWING TRACEABILITY LIST	

REF NUMBER	TITLE
H-2-833526	INDEX OF DRAWINGS
REFERENCES	
NEXT USED ON	

REVISIONS			
B	REVISED PER DCN-200W-XXX	XXX	XXXX

	NAME	DATE
DRAWN BY	T. BROOKTON	
CHECKED BY	D. NO MLF FOR SU	
ENGINEER	M. YEARELY	
PROJECT ENGINEER	J. BESSER	
CONSTRUCTION REPRESENTATIVE	J. FETTKETHER	
DESIGN AUTHORITY	R. WHITLOCK	

U.S. DEPARTMENT OF ENERGY
Richland Operations Office

MECHANICAL
RAD BLDG
OVERALL FLOOR PLAN

SIZE	CODE NO	DRAWING NO	REV NO
D	26817A	6654	H-2-833577 6

SCALE AS NOTED | DCN-200W-026 | SHEET 1 OF 16

XXXX PLOTID XXXX

ECR-14-00076 2 Page 54
SKETCH-2

DWG NO H-2-833579 SH 2 OF REV 4

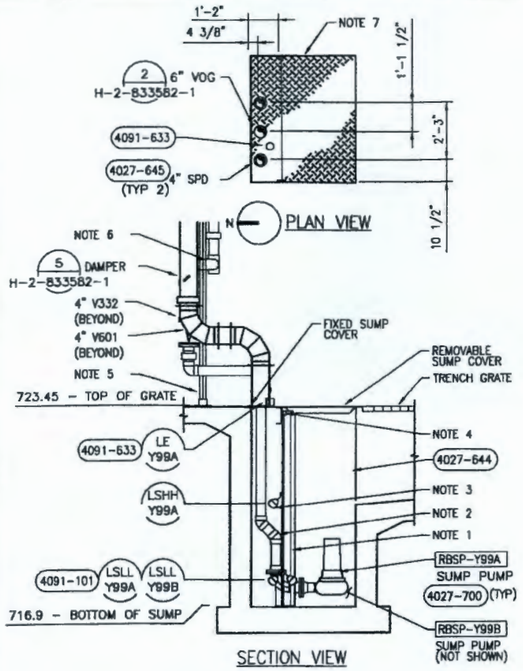

1 DUPLEX SUMP PUMP - NORTH
NTS
H-2-833577-8

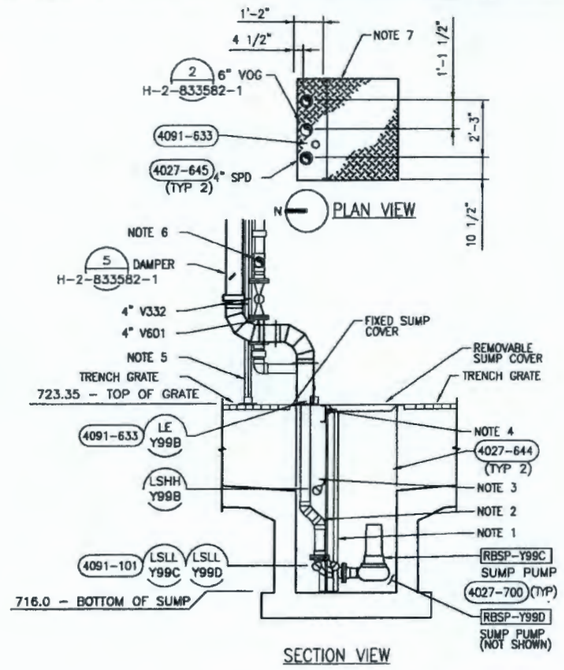

2 DUPLEX SUMP PUMP - EAST
NTS
H-2-833577-9

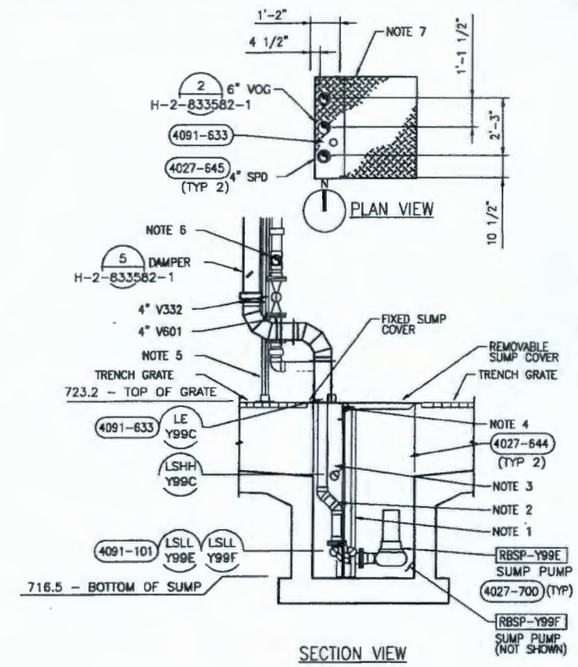

3 DUPLEX SUMP PUMP - SOUTH
NTS
H-2-833577-10

SUMP PUMP NOTES

1. 2" DIA GUIDE BARS, TWO PER PUMP, BY PUMP MANUFACTURER.
2. OFFSET DISCHARGE PIPING TO SUIT PENETRATION DIMENSIONS.
3. LEVEL FLOAT SWITCHES TETHERED TO CONTRACTOR SUPPIED SUPPORT ROD. DO NOT SECURE TO GUIDE BARS.
4. REFER TO STRUCTURAL DETAILS FOR CONSTRUCTION OF COVER SUPPORT AND GUIDE ROD ANCHORAGE.
5. UNISTRUT SUPPORT FOR VOG AND DISCHARGE PIPING. SUPPORT SHALL BE FLOOR MOUNTED AND STRADDLE TRENCH WIDTH.
6. 4" DISCHARGE PIPING FROM ADJACENT SUMP PUMP (NOT SHOWN).
7. ALL COVER PENETRATION DIMENSIONS FROM INSIDE FINISH FACE OF SUMP.

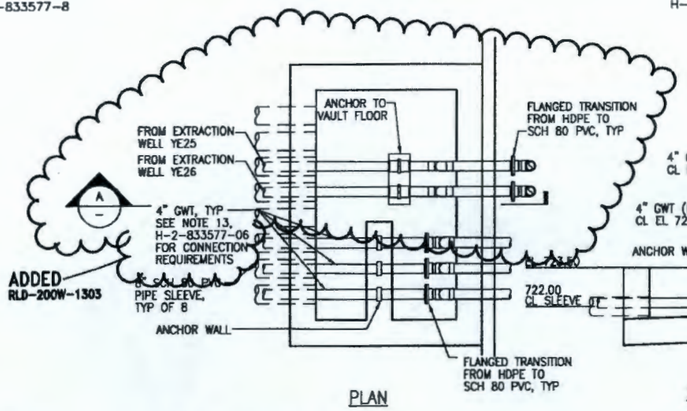

5 PIPE ENTRY VAULT
NTS
H-2-833577-01
H-2-833577-06

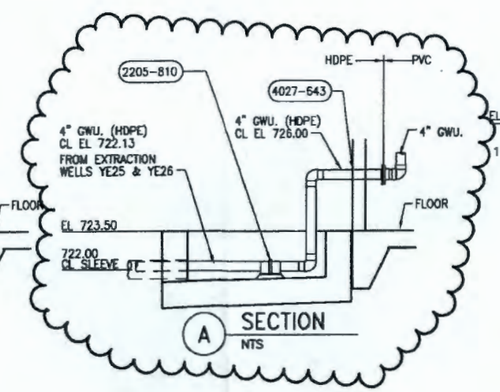

A SECTION
NTS

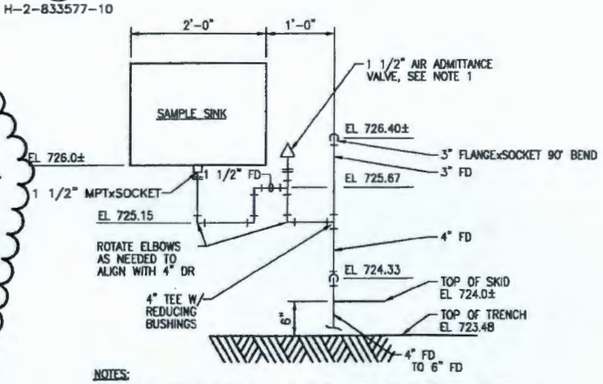

NOTES:
1. AIR ADMITTANCE VALVE SHALL BE "REDI-VENT" BY STUDOR, INC. OR EQUAL.
2. SAMPLE SINK ELEVATION AS SHOWN IS APPROXIMATE.

NN SECTION
1" = 1'-0"
H-2-833577-10

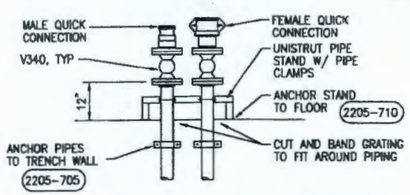

4 RESIN QUICK CONNECT
NTS
H-2-833577-2

DWG NO	TITLE	REFERENCES
	DRAWING TRACEABILITY LIST	NEXT USED ON
	H-2-833730	MECHANICAL STD DETAILS
	H-2-833526	INDEX OF DRAWINGS
	REF NUMBER	TITLE

REV	DATE	DESCRIPTION	BY	CHK	APP	DATE
4		REVISED PER ECN-14-000513 & INCORP. RLD-200W-1303	GCB	GCB		
3		REVISED PER DCN-200W-255 & RLD-200W-0438,-0495,-0573,-0804	WBM	WBM	BLS BMW	8/31/09 8/31/11
2		REVISED PER DCN-200W-197	RDS	RDS	SC CJT	10/8/10 10/28/10
1		REVISED PER DCN-200W-147 & RLD-200W-0033	WSB	WSB	SC JWS	10/15/10 10/19/10

REVISIONS

EDITORIAL MODIFICATON

	NAME	DATE
DRAWN	T. BROOK	7/27/10
CHECKED	S. LINO	7/27/10
ENGINEER	R. YEARSLEY	7/27/10
PROJECT ENGINEER	R. BOSSER	7/27/10
PROJECT MANAGER	J. FETTKETHER	7/27/10
DESIGN AUTHORITY	D. WHITLOCK	7/27/10

U.S. DEPARTMENT OF ENERGY
Richland Operations Office
MECHANICAL (RAD BLDG) DETAILS

REV	AREA	SYSTEM	DWG NO	SHEET	REV
D	200TA	8054	H-2-833579	2	4

SCALE: AS NOTED DCN-200W-028

XXXX PLOTID XXXX

ECR-14-000762 Page 55
"WAS CONDITION" (PER ECR-14-000513)

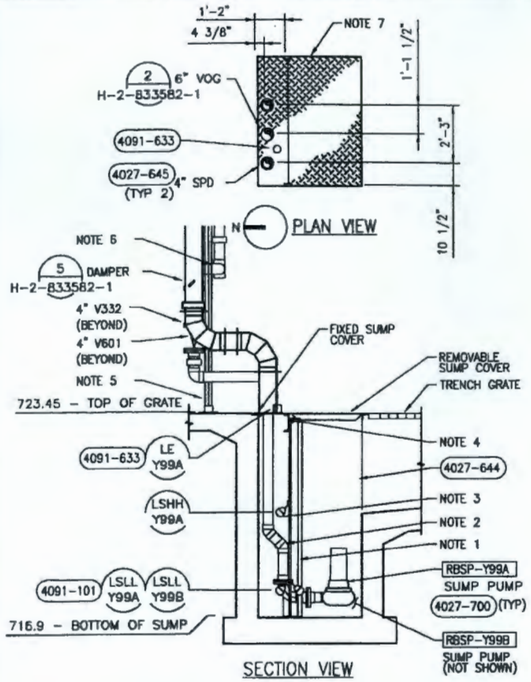

1 DUPLEX SUMP PUMP - NORTH
NTS
H-2-833577-8

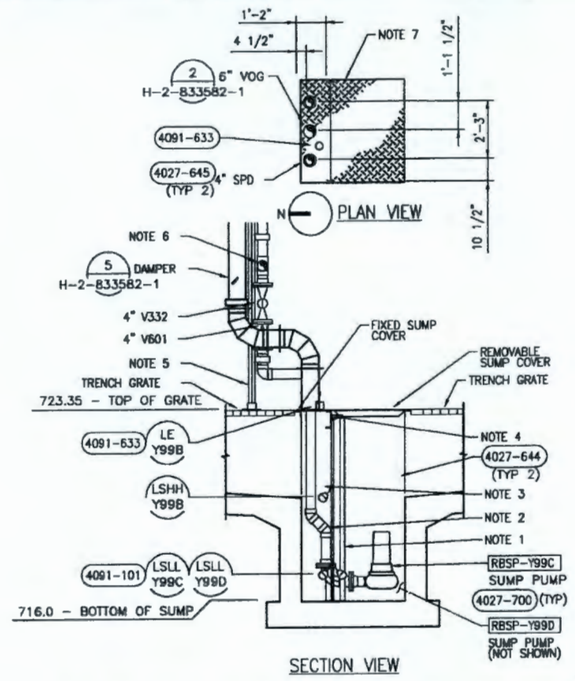

2 DUPLEX SUMP PUMP - EAST
NTS
H-2-833577-9

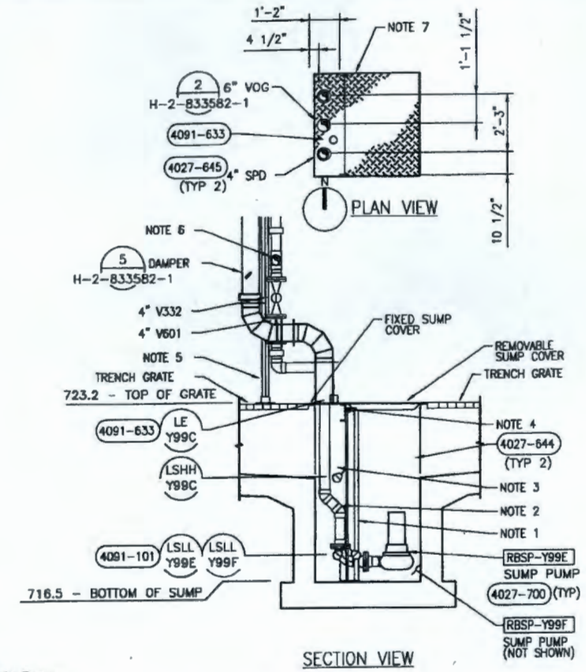

3 DUPLEX SUMP PUMP - SOUTH
NTS
H-2-833577-10

SUMP PUMP NOTES

1. 2" DIA GUIDE BARS, TWO PER PUMP, BY PUMP MANUFACTURER.
2. OFFSET DISCHARGE PIPING TO SUIT PENETRATION DIMENSIONS.
3. LEVEL FLOAT SWITCHES TETHERED TO CONTRACTOR SUPPIED SUPPORT ROD. DO NOT SECURE TO GUIDE BARS.
4. REFER TO STRUCTURAL DETAILS FOR CONSTRUCTION OF COVER SUPPORT AND GUIDE ROD ANCHORAGE.
5. UNISTRUT SUPPORT FOR VOG AND DISCHARGE PIPING. SUPPORT SHALL BE FLOOR MOUNTED AND STRADDLE TRENCH WIDTH.
6. 4" DISCHARGE PIPING FROM ADJACENT SUMP PUMP (NOT SHOWN).
7. ALL COVER PENETRATION DIMENSIONS FROM INSIDE FINISH FACE OF SUMP.

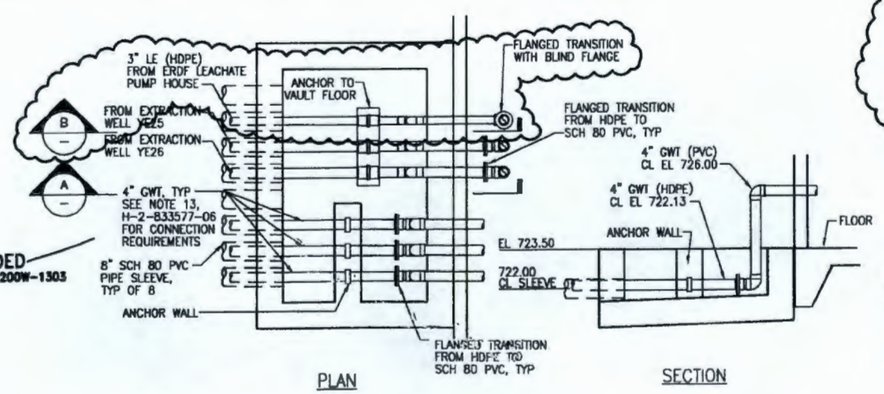

NOTE:
1. ANCHOR 3" HDPE CARRIER PIPE SIMILAR TO DETAIL; INSTALL INSULATED FITTING WRAP AROUND FULL EXTENT OF ANCHOR FITTING IN LIEU OF PIP INSTALLATION.

5 PIPE ENTRY VAULT
NTS
H-2-833577-01
H-2-833577-06

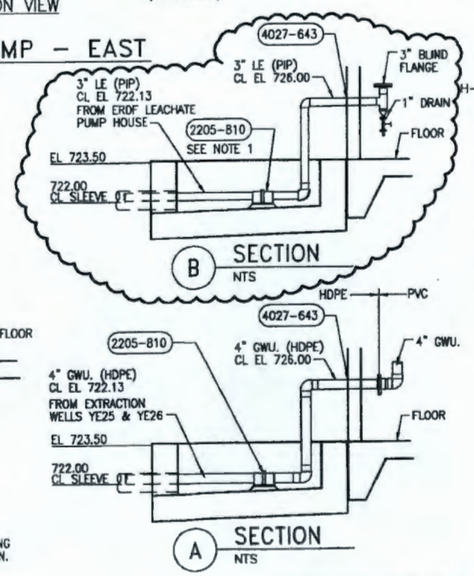

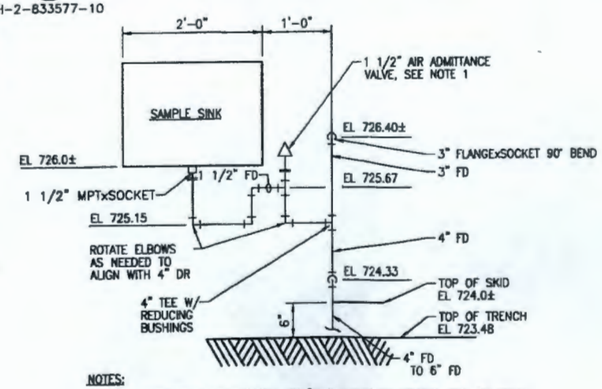

NOTES:
1. AIR ADMITTANCE VALVE SHALL BE "REDI-VENT" BY STUDOR, INC. OR EQUAL.
2. SAMPLE SINK ELEVATION AS SHOWN IS APPROXIMATE.

NN SECTION
1" = 1'-0"
H-2-833577-10

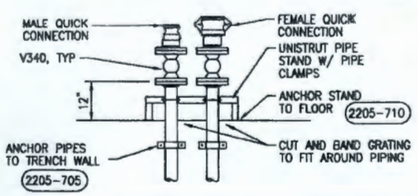

4 RESIN QUICK CONNECT
NTS
H-2-833577-2

DWG NO	TITLE
H-2-833730	MECHANICAL STD DETAILS
H-2-833526	INDEX OF DRAWINGS

DRAWING TRACEABILITY LIST — REFERENCES

REF NUMBER	TITLE

NEXT USED ON

REV	DESCRIPTION	DCN	BY	CHK	DATE
4	REVISED PER ECR-14-000513 & INCORP RLD-200W-1303	DCR 602/14	WRM	BLS	8/31/14
3	REVISED PER DCN-200W-288 & RLD-200W-0438,-0485,-0573,-0604	5/05/11	GDS	SC	10/28/10
2	REVISED PER DCN-200W-197	11/05/10	WSS	SC	10/16/10
1	REVISED PER DCN-200W-147 & RLD-200W-0033	10/16/09	WSS	JWS	10/19/09

REVISIONS

H-2-833577-10

NAME	DATE
J. BROOK	7/17/09
K. LONG	7/17/09
D. YEARSLEY	7/17/09
R. SASSER	7/17/09
L. FETZKEHER	7/17/09
B. WHITLOCK	7/17/09

U.S. DEPARTMENT OF ENERGY
Richland Operations Office

MECHANICAL RAD BLDG DETAILS

SIZE D | FILE NO 285TA | PROJECT NO 8654 | DWG NO H-2-833579 | REV 4

SCALE AS NOTED | DCN 200W-029 | SHEET 2 OF

XXXX PLOTTED XXXX

ECR-14-000762 Page 54

DWG NO H-2-833589 SH 4 OF REV 12

MATCH LINE AREA B, DWG H-2-833589-3

NOTE 3

CONT ON DWG H-2-833541-4

AIR GAP CONTROL ENCLOSURE

DPC-Y0TA [A1][C8]

SPLICE BOX, TYP

[C10]

CP-Y99C

TE-Y99H

DPC-Y0TE

[A1]

RBPT-Y99

[MSC]

LSU-Y99E

LSU-Y99E

DPC-Y0TA

LJ-Y99C [C2], TYP

RBSP-Y99E

RBSP-Y99E

SHP-Y99C

FE-Y99C

[C1]

TIT-Y04B

FE-Y04B

TIT-Y04A

FE-Y04A

FE-Y03B

FIT-Y03B [C1]

[C1]

TIT-Y03A

TE-Y03A

LSH-Y20A

LSL-Y20A

LIT-Y20

[A1]

[C1]

FIT-Y03D

FE-Y03D

TIT-Y03B

TE-Y03B

[A1][C4]

DPC-Y0TA

[A1]

[A1][C4]

LIT-Y99

[C4]

CP-Y99C

[C4]

[A1]

DPC-Y0TA

[C2]

AFD-Y20B

TSH-Y20B

PIT-Y20B

PIT-Y20A

[A1]

DPC-Y0TA

[C2]

AFD-Y20A

TSH-Y20A

DPC-Y0TA

AFD-Y99E

AFD-Y20B [N1A]

AFD-Y99E

[N1A], TYP

AFD-Y20B

AFD-Y20A

DPC-Y0TA [N1A]

[COAX]

ANTENNA RADIO B

A H-2-833750-05

HTP-Y21A

FIT-Y20

[A2]

DPC-Y0TA

XA-Y21A

[C2]

MASTER RADIO B

DPC-Y0B VIA TELECOM/FIBER BACK BOARD

DPC-Y0TA

MASTER RADIO A

FE-Y20

FIT-Y20

[C1]

AF-Y20A

AF-Y20B

[C1]

AIT-Y20A

DPC-Y0TA

[A2][C2]

DPC-Y0TA

AIT-Y20B

Y0TA

PDIT-Y20

NOTE 4

TELECOM/FIBER BACK BOARD

7

[COAX]

A H-2-833750-05

ANTENNA RADIO A

8

F E D C B A

N

PLAN
1/4"=1'-0"

AREA A

AREA B

AREA C

KEY PLAN

NOTES:

1. ALL CONDUIT RUNS ARE FIELD ROUTED. CONDUIT RUNS ARE EXPECTED TO BE COMBINED PER SPECIFICATIONS 26 05 02 3.03.
2. COMBINED CLASS 2 D.C. CIRCUITS INDICATED AS [A1][C2] ETC. MAY BE COMBINED IN ONE CONDUIT.
3. INSTALL 6 STRAND ARMORED FIBER OPTIC CABLE BETWEEN DPC-Y00 IN ETB-2 TO TELCO BACKBOARD IN RAD BLDG. PART NO. CORNING 006TBF-31131-A1 ROUTE THRU BLDG VIA BEAM CLAMP TYPE CABLE HANGER "J" HOOKS.
4. INSTALL FURNISHED SIEMENS NETWORK SWITCH P/N 6GK5324-0GG00-3HRZ IN EXISTING STUB RACK.

ECR-14-000762 Page 57
"WAS CONDITION"

DWG NO	TITLE
H-2-833533	ELECTRICAL LEGEND
H-2-833526	INDEX OF DRAWINGS

DRAWING TRACEABILITY LIST — REF NUMBER / TITLE — REFERENCES — NEXT USED ON

REV	DESCRIPTION	DRWN	CHKD	APPD	DATE
12	INITIAL RELEASE INTO PMCS PER ECR-14-00131	ERW			11/4/14
11	REVISED PER DCN-200W-711	JED	BLS	ERW	1/5/12

REVISIONS

	NAME	DATE
DRAWN BY	R. FLASKA	
CHECKED BY	K. KOPPELMANN	
ENGR	J. YEARSLEY	
ENGR	R. SASSER	
ENGR	R. DENION	
DESIGN MANAGER	C. EDWARDS	

U.S. DEPARTMENT OF ENERGY
Richland Operations Office

ELECTRICAL
RAD BLDG
CONTROL PLAN AREA C

SIZE D | BLDG NO 266TA | PROJECT NO 7301 | DWG NO H-2-833589 | REV 12

SCALE 1/4"=1'-0" | DCN-200W-034

XXXX PLOTID XXXX

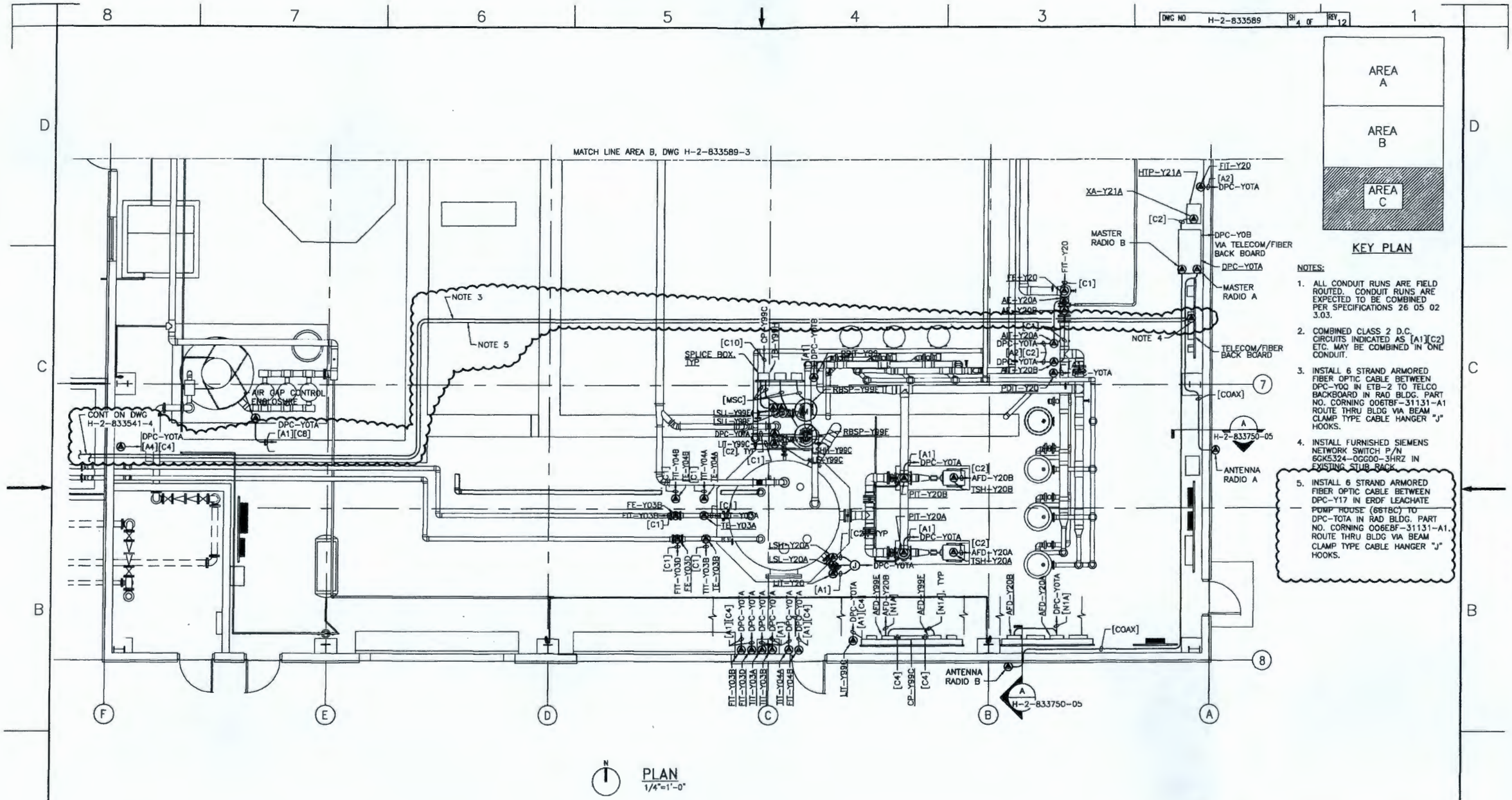

NOTES:

1. ALL CONDUIT RUNS ARE FIELD ROUTED. CONDUIT RUNS ARE EXPECTED TO BE COMBINED PER SPECIFICATIONS 26 05 02 3.03.
2. COMBINED CLASS 2 D.C. CIRCUITS INDICATED AS [A1][C2] ETC. MAY BE COMBINED IN ONE CONDUIT.
3. INSTALL 6 STRAND ARMORED FIBER OPTIC CABLE BETWEEN DPC-Y0Q IN ETB-2 TO TELCO BACKBOARD IN RAD BLDG. PART NO. CORNING 006TBF-311.31-A1 ROUTE THRU BLDG VIA BEAM CLAMP TYPE CABLE HANGER "J" HOOKS.
4. INSTALL FURNISHED SIEMENS NETWORK SWITCH P/N 6GK5324-0GG00-3HRZ IN EXISTING STUB RACK.
5. INSTALL 6 STRAND ARMORED FIBER OPTIC CABLE BETWEEN DPC-Y17 IN ERDF LEACHATE PUMP HOUSE (66TBC) TO DPC-T0TA IN RAD BLDG. PART NO. CORNING 006EBF-31131-A1. ROUTE THRU BLDG VIA BEAM CLAMP TYPE CABLE HANGER "J" HOOKS.

PLAN
1/4"=1'-0"

DWG NO	TITLE
DRAWING TRACEABILITY LIST	

REF NUMBER	TITLE
H-2-833533	ELECTRICAL LEGEND
H-2-833526	INDEX OF DRAWINGS

REFERENCES — NEXT USED ON

REV	DESCRIPTION	DRAWN	CHK	APP	DATE
12	INITIAL RELEASE INTO RMCS PER ECR-14-00131	ERW	TLM/TM	JEB	11/4/14
11	REVISED PER DCN-200W-311	GLS	SRW		1/5/12 1/5/12

REVISIONS

	NAME	DATE
DRAWN BY	S. FLASKA	8/20/14
CHK BY	KOEPPEMANN	8/20/14
APP BY	J. YARBLEY	8/20/14
APP BY	S. KISSER	8/20/14
APP BY	R. DENTON	8/20/14
DESIGN AGENCY	G. EDWARDS	8/20/14

U.S. DEPARTMENT OF ENERGY
Richland Operations Office

ELECTRICAL
RAD BLDG
CONTROL PLAN AREA C

SIZE	CODE NO	DRAWING NO	SHEET	REV
D	28BTA	7501	H-2-833589	12

SCALE 1/4"=1'-0" UNIT DCN-200W-034 SHEET

XXXX PLOTID XXXX

ECR-14-000762 Page 58

DWG NO H-2-833599 SH 12 OF REV 2

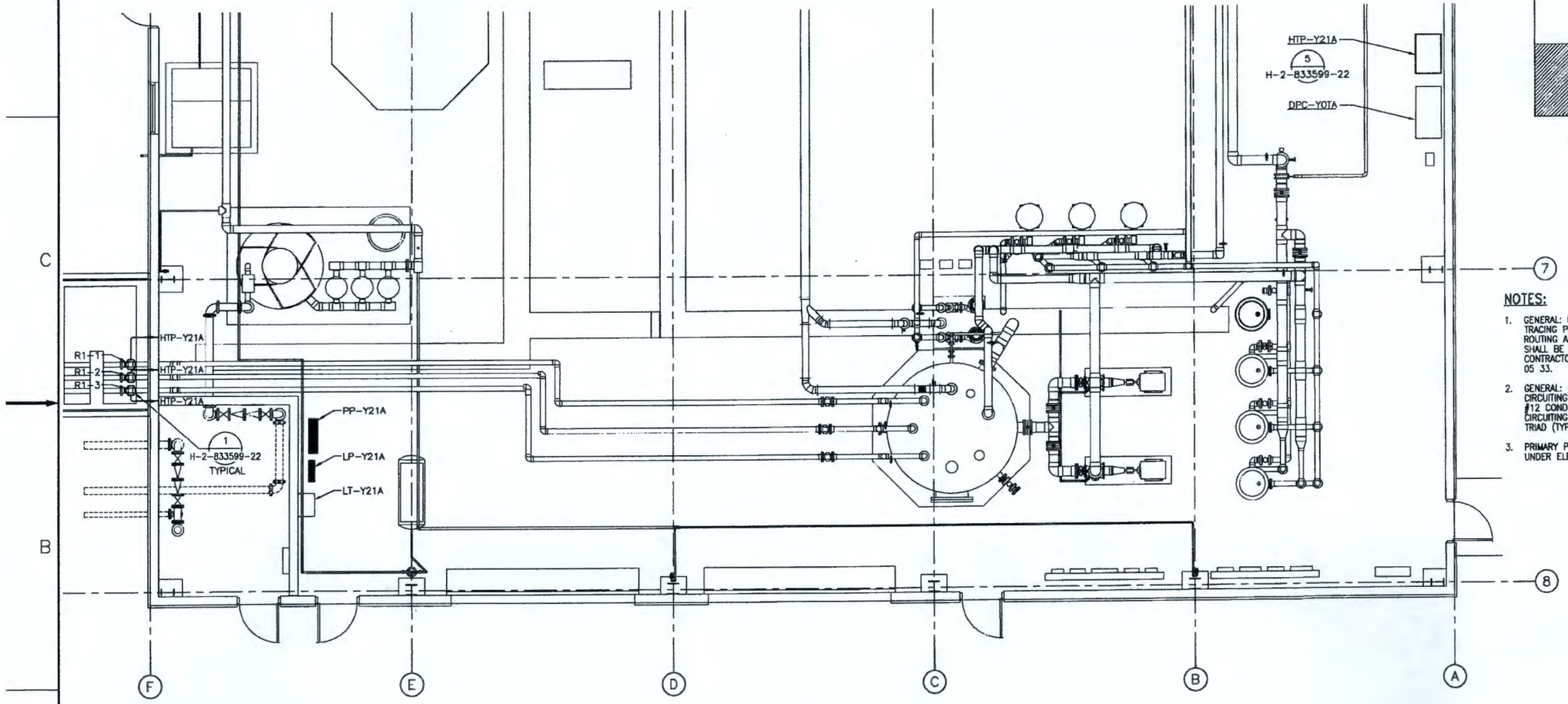

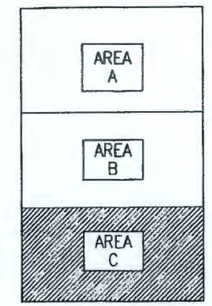

KEY PLAN

NOTES:

1. GENERAL: RTD CONNECTIONS TO PIPE HEAT TRACING PANEL NOT SHOWN. CONDUIT ROUTING AND DESIGN OF RTD CONNECTIONS SHALL BE PROVIDED BY PIPE HEAT TRACING CONTRACTOR. SEE SPECIFICATION SECTION 40 05 33.
2. GENERAL: PIPE HEAT TRACING POWER CIRCUITING SHALL UTILIZE 3/4" CONDUIT, #12 CONDUCTORS, AND #12 GROUND. RTD CIRCUITING SHALL UTILIZE TWISTED SHIELDED TRIAD (TYPE 4) CABLE.
3. PRIMARY POWER TO HTP-Y21A IS PROVIDED UNDER ELECTRICAL WORK.

N

PLAN
1/4"=1'-0"

DWG NO	TITLE
DRAWING TRACEABILITY LIST	

REF NUMBER	TITLE
H-2-833533	ELECTRICAL LEGEND
H-2-833526	INDEX OF DRAWINGS
NEXT USED ON	REFERENCES

REV NO	DESCRIPTION	DRAWN	CHECKED	ENGINEER	DATE
3	REVISED PER DCN-280W-292	JEB	BLB	PHZ	3/8/12 4/19/12
2	REVISED PER DCN-200W-272 & RLB-280W-0909	VDB	PHZ	FAH	8/8/11 3/9/11
1	REVISED PER DCN-200W-147	WSS	SC	SEM	10/16/10 10/20/10

REVISIONS

NAME	DATE
DRAWN V. RAKDUN	10/7/09
ENGINEER J. MCMURREN	7/29/09
CHECKED D. KARSLEY	7/29/09
SUPV ENGR B. SISSEK	7/29/09
PROJ ENGR R. DENTON	7/29/09
CONST AUTHORITY G. EDWARDS	7/29/09

U.S. DEPARTMENT OF ENERGY
Richland Operations Office

ELECTRICAL
RAD BLDG
HEAT TRACE PLAN AREA C

SIZE	CODE ID	CONTRACT NO	DWG NO	REV
D	28BTA	2401 8280	H-2-833599	3

SCALE AS NOTED SHEET 12 OF

PLOTTED

ECR-14-000762 Page 59
"WAS CONDITION"

DWG NO H-2-833599 SH 12 OF REV 2

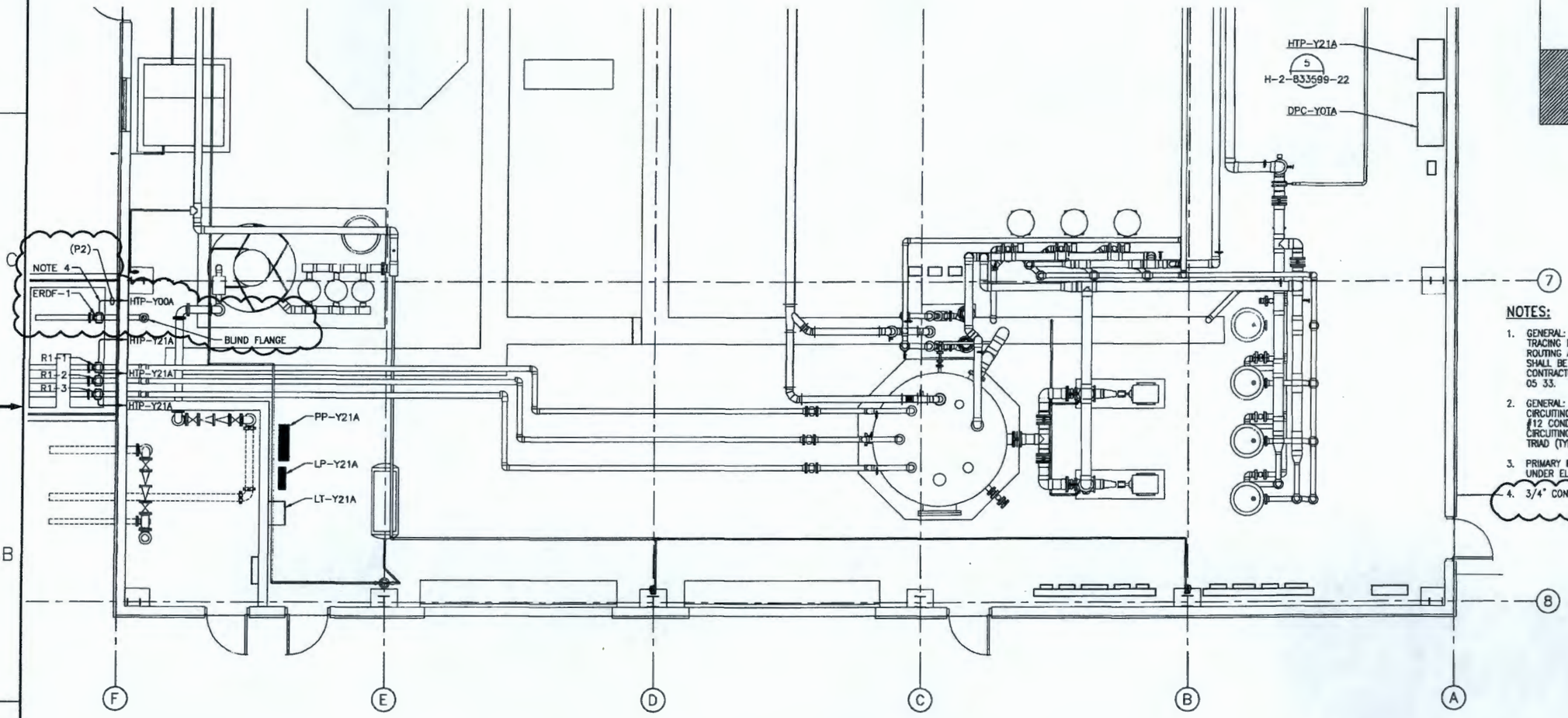

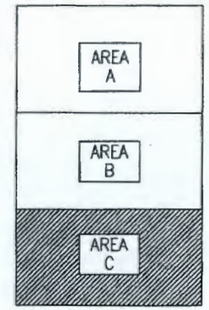

KEY PLAN

NOTES:

1. GENERAL: RTD CONNECTIONS TO PIPE HEAT TRACING PANEL NOT SHOWN. CONDUIT ROUTING AND DESIGN OF RTD CONNECTIONS SHALL BE PROVIDED BY PIPE HEAT TRACING CONTRACTOR. SEE SPECIFICATION SECTION 40 05 33.
2. GENERAL: PIPE HEAT TRACING POWER CIRCUITING SHALL UTILIZE 3/4" CONDUIT, #12 CONDUCTORS, AND #12 GROUND. RTD CIRCUITING SHALL UTILIZE TWISTED SHIELDED TRIAD (TYPE 4) CABLE.
3. PRIMARY POWER TO HTP-Y21A IS PROVIDED UNDER ELECTRICAL WORK.
4. 3/4" CONDUIT, 2-1/C#10 1/C#12 GROUND

N

PLAN
1/4"=1'-0"

DWG NO	TITLE
H-2-833533	ELECTRICAL LEGEND
H-2-833526	INDEX OF DRAWINGS

DRAWING TRACEABILITY LIST

REF NUMBER	TITLE
NEXT USED ON	REFERENCES

REV	DESCRIPTION	DRAWN	CHECKED	APPROVED
3	REVISED PER DCN-280W-290	JEB 5/8/12	BLS 4/20/12	PHZ 4/20/12
2	REVISED PER DCN-280W-272 & RUB-280W-0909	MJB 8/8/11	PHZ 8/10/11	FAH 8/19/11
1	REVISED PER DCN-280W-147	WSS 10/16/06	SC 10/16/06	SEM 10/26/06

REVISIONS

	NAME	DATE
DRAWN BY	W. RARDIN	
TRACED BY	J. MCMURREN	
DESIGNED BY	D. YEARSLEY	
REVIEWED BY	SCOTT CASSER	
REVIEWED BY	R. DENTON	
DESIGN AUTHORITY	C. EDWARDS	

U.S. DEPARTMENT OF ENERGY
Richland Operations Office

ELECTRICAL
RAD BLDG
HEAT TRACE PLAN AREA C

SIZE D | CODE IDENT NO 28617A | DRAWING NO 8200 | H-2-833599 | REV 3

SCALE AS NOTED | DCN DCN-280W-068 | SHEET 12

PLOTTED

ECR-14-000762 Page 60

DWG NO H-2-833599 SH 15 OF REV 7

HEAT TRACE PIPING SCHEDULE

AREA/SHEET	PROCESS ID	SIZE MATL	LENGTH THIS SHEET FT	TOTAL PIPE LENGTH FT	CABLE SELECTION	TOTAL OUTPUT W/FT PIPE	ESTIMATED CABLE LENGTH, FT (NOTE 3)	TOTAL OUTPUT W	PNLBD CIRCUITS REQUIRED (NOTE 4)	FED FROM PANEL	HT ASSIGNMENT ID	REMARKS
BIO: AREA D	GW	6" HDPE	15	15	5BTV2	10.5	48	252.5	1	HTP-Y00A	V13-C	GW FROM ETB2: TRACE FROM V15-Y02A TO FE-Y02B, INCLUDING DRAIN V16-Y02A
	GW	6" HDPE	15	15	5BTV2	10.5	48	252.5	1	HTP-Y00A	V13-B	GW FROM ETB2: TRACE FROM V15-Y02C TO FE-Y02D, INCLUDING DRAIN V16-Y02C
	DR/SAM	1" HDPE	10	10	3BTV2	3.4	24	81.1	1	HTP-Y00A	V13-D	DRAIN AND SAMPLE LINE IN SUMP, V13/V14-Y02A
	DR/SAM	1" HDPE	10	10	3BTV2	3.4	24	81.1	1	HTP-Y00A	V13-E	DRAIN AND SAMPLE LINE IN SUMP, V13/V14-Y02C
	DR/SAM	1" HDPE	10	10	3BTV2	3.4	24	81.1	1	HTP-Y00A	V13-F	DRAIN AND SAMPLE LINE IN SUMP, V02/V03-YE04
	DR/SAM	1" HDPE	10	10	3BTV2	3.4	24	81.1	1	HTP-Y00A	V13-G	DRAIN AND SAMPLE LINE IN SUMP, V02/V03-YE08
	DR/SAM	1" HDPE	10	10	3BTV2	3.4	24	81.1	1	HTP-Y00A	V13-H	DRAIN AND SAMPLE LINE IN SUMP, V13/V14-Y01A
	GW	6" HDPE	15	15	5BTV2	10.5	48	252.5	1	HTP-Y00A	V13-I	GW FROM ETB1: TRACE FROM V15-Y01A TO FE-Y01B, INCLUDING DRAIN V16-Y01A
	DR/SAM	1" HDPE	10	10	3BTV2	3.4	24	81.1	1	HTP-Y00A	V13-J	DRAIN AND SAMPLE LINE IN SUMP, V13/V14-Y01B
	GW	6" HDPE	15	15	5BTV2	10.5	48	252.5	1	HTP-Y00A	V13-K	GW FROM ETB1: TRACE FROM V15-Y01B TO FE-Y01D, INCLUDING DRAIN V16-Y01B
	DR/SAM	1" HDPE	10	10	3BTV2	3.4	24	81.1	1	HTP-Y00A	V13-L	DRAIN AND SAMPLE LINE IN SUMP, V16-Y80A
	DR/SAM	1" HDPE	10	10	3BTV2	3.4	24	81.1	1	HTP-Y00A	V13-M	DRAIN AND SAMPLE LINE IN SUMP, V16-Y80B
	DR/SAM	1" HDPE	10	10	3BTV2	3.4	24	81.1	1	HTP-Y00A	V13-N	DRAIN AND SAMPLE LINE IN SUMP, V16-Y80C
	DR/SAM	1" HDPE	10	10	3BTV2	3.4	24	81.1	1	HTP-Y00A	V13-O	DRAIN AND SAMPLE LINE IN SUMP, V16-Y80D
	TDR/BYP	3" PVC	78	78	8BTV2	8.1	106	858.6	1	HTP-Y00A	V22	TDR BYPASS LINE, V09-Y98
	TDR/BYP	3" PVC	91	91	8BTV2	8.1	122	988.2	1	HTP-Y00A	V23	TDR BYPASS LINE
BIO: AREA E	MF	24" PVC	36.3	81.3	5BTV2	32.2	890	3184.4	2	HTP-Y00B	E1	FROM AMT SPLITTER TO AMT "A"
	MF	24" PVC	36.3	81.3	5BTV2	32.2	890	3184.4	2	HTP-Y00B	E2	FROM AMT SPLITTER TO AMT "F" (FUTURE)
	MF	24" PVC	25.8	55.2	5BTV2	32.2	608	2175.9	2	HTP-Y00B	E3	FROM AMT SPLITTER TO AMT "B"
	MF	24" PVC	25.8	55.2	5BTV2	32.2	608	2175.9	2	HTP-Y00B	E4	FROM AMT SPLITTER TO AMT "E" (FUTURE)
	MF	24" PVC	15.5	47.3	5BTV2	32.2	523	1873	2	HTP-Y00B	E5	FROM AMT SPLITTER TO AMT "C"
	MF	24" PVC	15.5	47.3	5BTV2	32.2	523	1873	2	HTP-Y00B	E6	FROM AMT SPLITTER TO AMT "D"
	PVRV-Y49	12" SST	–	–	10BTV2	–	110	1039.5	1	HTP-Y00B	V21-A	AM SPLITTER PRESSURE/VACUUM RELIEF VALVE, AMBIENT CONTROL
	BPE/DR	2" SST	3	3	5BTV2	5.4	16	84.6	1	HTP-Y00B	V21-B	AMT SPLITTER GATE DRAIN, V08-Y49
	BPE/DR	2" SST	3	3	5BTV2	5.4	16	84.6	1	HTP-Y00B	V21-C	AMT SPLITTER GATE DRAIN, V09-Y49
	BPE/DR	2" SST	3	3	5BTV2	5.4	16	84.6	1	HTP-Y00B	V21-D	AMT SPLITTER GATE DRAIN, V10-Y49
	BPE/DR	2" SST	3	3	5BTV2	5.4	16	84.6	1	HTP-Y00B	V21-E	AMT SPLITTER GATE DRAIN, V11-Y49
	BPE/DR	2" SST	3	3	5BTV2	5.4	16	84.6	1	HTP-Y00B	V21-F	AMT SPLITTER GATE DRAIN, V12-Y49
	BPE/DR	2" SST	3	3	5BTV2	5.4	16	84.6	1	HTP-Y00B	V21-G	AMT SPLITTER GATE DRAIN, V13-Y49
	BPE/DR	4" PVC	3	3	5BTV2	8.1	19	78	1	HTP-Y00B	V21-H	AMT SPLITTER DRAIN, V14-Y49
	VOC	3/4" PVC	89.3	89.3	3BTV2	2.9	203	589.2	1	HTP-Y00C	N8	PIPE GROUP – VOC CONDENSATE DRAIN
BIO: AREA G	FW	6" PVC	56	56	8BTV2	10.9	146	800.8	1	HTP-Y00A	A1	FROM CENTRALIZED SYSTEM EFFLUENT PUMPS TO RAD TW SUPPLY TANK
	GWTE	8" PVC	84.3	84.3	5BTV2	15.4	416	1603.1	1	HTP-Y00A	A2	FROM RAD TC-99 BAG FILTER TO EQ TANK
	GWTE	8" PVC	80.5	80.5	5BTV2	15.4	398	1533.8	1	HTP-Y00A	A3	FROM RAD TC-99 BAG FILTER TO EQ TANK
	SFA	1/2" SST	107.5	107.5	3BTV2	3.4	153	517.1	1	HTP-Y00A	A4-A	PIPE GROUP – SFA TO RAD
	GW	3" PVC	90	90	8BTV2	5.8	120	697.2	1	HTP-Y00A	A4-B	GW FROM YE4, CARTRIDGE FILTER TO EQ TANK
	GW	3" PVC	90	90	8BTV2	5.8	120	697.2	1	HTP-Y00A	A4-C	GW FROM YE8, CARTRIDGE FILTER TO EQ TANK
	GW	3" PVC	85	85	8BTV2	5.8	114	661.2	1	HTP-Y00A	A4-D	GW FROM YE14, BAG FILTERS TO EQ TANK
	UW	6" PVC	53.5	53.5	8BTV2	10.9	140	768	1	HTP-Y00A	A6	UTILITY WATER FROM RAD BUILDING
	TDR	3" PVC	56.5	179.2	8BTV2	5.8	227	1318.9	1	HTP-Y00A	B1-A	SUMP PUMP DISCHARGE FROM AREA B TO RECYCLE TANK
	DR	1-1/2" PVC	75	75	5BTV2	4.5	102	459	1	HTP-Y00A	B1-B	DRAIN LINES FROM PROCESS PIPING TO RCT-Y40, INCLUDING VALVES
	LIT-Y00A	3" PVC	3	3	8BTV2	5.8	16	90.8	1	HTP-Y00A	B1-C	V01-Y40L, LE-Y40L, V02-Y40L, TRACE FROM TANK TO DIAPHRAGM SEAL
	SN	2" PVC	58.8	58.8	5BTV2	4.5	83	367.1	1	HTP-Y00A	B2	FROM SN FEED SYSTEM TO RECYCLE TANK
	BDR	3" PVC	59.3	59.3	8BTV2	5.8	83	482.8	1	HTP-Y00A	B3	SUMP PUMP DISCHARGE FROM AREA L TO RECYCLE TANK
	FCR	4" PVC	65.8	65.8	5BTV2	8.1	170	689.4	1	HTP-Y00A	B4	FROM SOLIDS RECYCLE PUMPS TO RECYCLE TANK
	GWI	16" PVC	70	70	5BTV2	21.8	516	1873.1	2	HTP-Y00A	B5	FROM CENTRALIZED SYSTEM INFLUENT PUMPS TO RECYCLE TANK
	GWI	10" PVC	70	70	5BTV2	21.8	516	1873.1	2	HTP-Y00A	B5-1	FROM CENTRALIZED SYSTEM INFLUENT PUMPS TO RECYCLE TANK
	GWI	10" PVC	70	70	5BTV2	21.8	516	1873.1	2	HTP-Y00A	B5-2	FROM CENTRALIZED SYSTEM INFLUENT PUMPS TO RECYCLE TANK
	ASE/BYP	16" PVC	78.1	78.1	5BTV2	21.8	574	2084.3	2	HTP-Y00A	B6	FROM AIR STRIPPER EFFLUENT PUMPS TO RECYCLE TANK
	ASE/BYP	10" PVC	78.1	78.1	5BTV2	21.8	574	2084.3	2	HTP-Y00A	B6-1	FROM AIR STRIPPER EFFLUENT PUMPS TO RECYCLE TANK
	ASE/BYP	10" PVC	78.1	78.1	5BTV2	21.8	574	2084.3	2	HTP-Y00A	B6-2	FROM AIR STRIPPER EFFLUENT PUMPS TO RECYCLE TANK
	BPE/BYP	16" PVC	86.7	86.7	5BTV2	21.8	636	2308.7	2	HTP-Y00A	B7	FROM AERATION MEMBRANE PERMEATE PUMPS TO RECYCLE TANK
	BPE/BYP	10" PVC	86.7	86.7	5BTV2	21.8	636	2308.7	2	HTP-Y00A	B7-1	FROM AERATION MEMBRANE PERMEATE PUMPS TO RECYCLE TANK
	BPE/BYP	10" PVC	86.7	86.7	5BTV2	21.8	636	2308.7	2	HTP-Y00A	B7-2	FROM AERATION MEMBRANE PERMEATE PUMPS TO RECYCLE TANK
	BPI	20" PVC	115.3	115.3	5BTV2	25.1	980	3508.8	2	HTP-Y00A	B8	FROM RECYCLE TANK TO FBR INFLUENT PUMPS
	BPI	10" PVC	115.3	115.3	5BTV2	25.1	980	3508.8	2	HTP-Y00A	B8-1	FROM RECYCLE TANK TO FBR INFLUENT PUMPS
	BPI	10" PVC	115.3	115.3	5BTV2	25.1	980	3508.8	2	HTP-Y00A	B8-2	FROM RECYCLE TANK TO FBR INFLUENT PUMPS

CONTINUED ON SHEET 16

HEAT TRACE PIPING SCHEDULE (CONTINUED)

AREA/SHEET	PROCESS ID	SIZE MATL	LENGTH THIS SHEET FT	TOTAL PIPE LENGTH FT	CABLE SELECTION	TOTAL OUTPUT W/FT PIPE	ESTIMATED CABLE LENGTH, FT (NOTE 3)	TOTAL OUTPUT W	PNLBD CIRCUITS REQUIRED (NOTE 4)	FED FROM PANEL	RTD	HT ASSIGNMENT ID	REMARKS
ETB-1	VOG	6" SST	17.5	17.5	8BTV1	13.5	54	366	1	HTP-Y1A	RTD-E101	E101	SST PIPING TO VGT DRUMS. SEE NOTE 9.
	TOG	6" SST	30	30	8BTV1	13.5	84	589	1	HTP-Y1A	RTD-E102 RTD-E103	E102	SST PIPING FROM VGT DRUMS. SEE NOTE 9.
ETB-2	VOG	6" SST	27.5	27.5	8BTV1	13.5	78	528	1	HTP-Y2A	RTD-E201	E201	SST PIPING TO DRUMS VGT-Y2A AND VGT-Y2B. SEE NOTE 9.
	TOG	6" SST	30	30	8BTV1	13.5	84	569	1	HTP-Y2A	RTD-E202 RTD-E203	E202	SST PIPING FROM VGT DRUMS. SEE NOTE 9.
	VOG	6" SST	17.5	17.5	8BTV1	13.5	54	386	1	HTP-Y2A	RTD-E204	E204	SST PIPING TO DRUMS VGT-Y3A AND VGT-Y3B. SEE NOTE 9.
	TOG	6" SST	30	30	8BTV1	13.5	84	569	1	HTP-Y2A	RTD-E205 RTD-E206	E205	SST PIPING FROM VGT DRUMS. SEE NOTE 9.
ETB-3	VOG / TOG	–	–	–	–	–	–	–	–	HTP-Y4A	–	–	SEE H-2-833599 SHEET 25
RAD (NOTE 7)	GWT	4" PVC	5	5	8BTV1	7.6	24	912	–	HTP-Y21A	RTD-R1	R1	PVC PIPING BETWEEN BUILDING AND HDPE IN TRENCH
	GWT	4" PVC	5	5	8BTV1	7.6	24	912	–	HTP-Y21A	RTD-R2	R1	PVC PIPING BETWEEN BUILDING AND HDPE IN TRENCH
	GWT	4" PVC	5	5	8BTV1	7.6	24	912	–	HTP-Y21A	RTD-R3	R1	PVC PIPING BETWEEN BUILDING AND HDPE IN TRENCH

NOTES

1. HEAT TRACE EXTERIOR PIPING FOR PURPOSE OF FREEZE PROTECTION.
2. GROUP PIPES AS SHOWN FOR GROUP CONTROL OF MULTIPLE PIPE BRANCHES.
3. ESTIMATED CABLE LENGTH INCLUDES A 20% ALLOWANCE FOR VALVES AND PIPE SUPPORTS AND AN ADDITIONAL 12 FT ALLOWANCE FOR TERMINATIONS. FINAL CABLE LENGTH MAY VARY FROM THIS SCHEDULE DEPENDING ON FIELD CONDITIONS. FOR PRESSURE/VACUUM RELIEF VALVES, SEE PIPE HEAT TRACING CABLE SCHEDULE, H-2-833599 SH 18 NOTE 10.
4. PANELBOARD CIRCUITS REQUIRED IS BASED ON ESTIMATED CABLE LENGTH AND MAXIMUM START-UP CURRENT AT °F. HEAT TRACE SYSTEMS AT THE BIO PROCESS BUILDING ARE SELECTED AT 277V, 20A. HEAT TRACE SYSTEMS AT THE RAD BUILDING AND TRANSFER BUILDINGS ARE SELECTED AT 120V, 20A. COORDINATE NUMBER OF PANELBOARD CIRCUITS REQUIRED FOR EACH HT BRANCH WITH FINAL CABLE LENGTH AND HEAT TRACE CABLE SCHEDULE.
5. NOT USED.
6. AREA/SHEET COLUMN REFERS TO BIO-PROCESS BUILDING KEY PLAN EXCEPT WHERE NOTED OTHERWISE. ETB = EXTRACTION TRANSFER BUILDING.
7. HEAT TRACE PIPING AT RAD BUILDING FROM THE HDPE PIPE ANCHOR (APPROXIMATELY 3 FEET FROM EXTERIOR WALL) TO THE FIRST FLANGE INSIDE THE BUILDING. TOTAL PIPE LENGTH LISTED IN THIS SCHEDULE IS APPROXIMATE.
8. NOT USED.
9. HEAT TRACE AND INSULATE 4" SST BRANCHES SAME AS 6" HEADERS. PROVIDE ONE RTD FOR EACH TOG AND VOG HEADER.
10. ESTIMATED CABLE LENGTHS INCLUDE ADDITIONAL 15' FOR TERMINATIONS AND ANY ADDITIONAL HOSE. TOTAL OUTPUT WATTS CALCULATED FOR 0' FAHRENHEIT STARTUP.

ECR-14-000762 Page ____
"WAS CONDITION"

BLDG. NO. 289T 289TA 289TB 289TC 289TF

INDEX NO.

THIS SPACE RESERVED FOR BUILDING AND INDEX NUMBERS

REF NUMBER	TITLE
H-2-833533	ELECTRICAL LEGEND
H-2-833526	INDEX OF DRAWINGS

REFERENCES

DWG NO | TITLE — DRAWING TRACEABILITY LIST

NEXT USED ON

REV	DESCRIPTION	DRW	CHK	APPR
7	REVISED PER ECR-12-001365, & ECR-14-000014	10/16/14		
6	INCORP ECR-13-000778	DCB 1/20/14	GGB 1/20/14	RBR 1/20/14

REVISIONS

NAME: DRAWN BY M RARDIN; J MCMORREN; D YEARSLEY; R SASSER; R DENTON; DESIGN AUTHORITY G EDWARDS

U.S. DEPARTMENT OF ENERGY
Richland Operations Office

ELECTRICAL HEAT TRACE PIPING SCHEDULES

SIZE D | BLDG NO SEE ABOVE | INDEX NO 7301 8280 | DWG NO H-2-833599 | REV 7

SCALE NONE | DCN-200W-068 | SHEET 15 OF

XXXX PLOTID XXXX

HEAT TRACE PIPING SCHEDULE

AREA/SHEET	PROCESS ID	SIZE MATL	LENGTH THIS SHEET FT	TOTAL PIPE LENGTH FT	CABLE SELECTION	TOTAL OUTPUT W/FT PIPE	ESTIMATED CABLE LENGTH, FT (NOTE 3)	TOTAL OUTPUT W	PNLBD CIRCUITS REQUIRED (NOTE 4)	FED FROM PANEL	HT ASSIGNMENT ID	REMARKS
BIO: AREA D	GW	6" HDPE	15	15	5BTV2	10.5	48	252.5	1	HTP-Y00A	V13-C	GW FROM ETB2: TRACE FROM V15-Y02A TO FE-Y02B, INCLUDING DRAIN V16-Y02A
	GW	6" HDPE	15	15	5BTV2	10.5	48	252.5	1	HTP-Y00A	V13-B	GW FROM ETB2: TRACE FROM V15-Y02C TO FE-Y02D, INCLUDING DRAIN V16-Y02C
	DR/SAM	1" HDPE	10	10	3BTV2	3.4	24	81.1	1	HTP-Y00A	V13-D	DRAIN AND SAMPLE LINE IN SUMP, V13/V14-Y02A
	DR/SAM	1" HDPE	10	10	3BTV2	3.4	24	81.1	1	HTP-Y00A	V13-E	DRAIN AND SAMPLE LINE IN SUMP, V13/V14-Y02C
	DR/SAM	1" HDPE	10	10	3BTV2	3.4	24	81.1	1	HTP-Y00A	V13-F	DRAIN AND SAMPLE LINE IN SUMP, V02/V03-YE04
	DR/SAM	1" HDPE	10	10	3BTV2	3.4	24	81.1	1	HTP-Y00A	V13-G	DRAIN AND SAMPLE LINE IN SUMP, V02/V03-YE08
	DR/SAM	1" HDPE	10	10	3BTV2	3.4	24	81.1	1	HTP-Y00A	V13-H	DRAIN AND SAMPLE LINE IN SUMP, V13/V14-Y01A
	GW	6" HDPE	15	15	5BTV2	10.5	48	252.5	1	HTP-Y00A	V13-I	GW FROM ETB1: TRACE FROM V15-Y01A TO FE-Y01B, INCLUDING DRAIN V16-Y01A
	DR/SAM	1" HDPE	10	10	3BTV2	3.4	24	81.1	1	HTP-Y00A	V13-J	DRAIN AND SAMPLE LINE IN SUMP, V13/V14-Y01B
	GW	6" HDPE	15	15	5BTV2	10.5	48	252.5	1	HTP-Y00A	V13-K	GW FROM ETB1: TRACE FROM V15-Y01B TO FE-Y01D, INCLUDING DRAIN V16-Y01B
	DR/SAM	1" HDPE	10	10	3BTV2	3.4	24	81.1	1	HTP-Y00A	V13-L	DRAIN AND SAMPLE LINE IN SUMP, V16-Y80A
	DR/SAM	1" HDPE	10	10	3BTV2	3.4	24	81.1	1	HTP-Y00A	V13-M	DRAIN AND SAMPLE LINE IN SUMP, V16-Y80B
	DR/SAM	1" HDPE	10	10	3BTV2	3.4	24	81.1	1	HTP-Y00A	V13-N	DRAIN AND SAMPLE LINE IN SUMP, V16-Y80C
	DR/SAM	1" HDPE	10	10	3BTV2	3.4	24	81.1	1	HTP-Y00A	V13-O	DRAIN AND SAMPLE LINE IN SUMP, V16-Y80D
	TDR/BYP	3" PVC	78	78	8BTV2	8.1	106	858.6	1	HTP-Y00A	V22	TDR BYPASS LINE, V09-Y98
	TDR/BYP	3" PVC	91	91	8BTV2	8.1	122	988.2	1	HTP-Y00A	V23	TDR BYPASS LINE
BIO: AREA E	MF	24" PVC	36.3	81.3	5BTV2	32.2	890	3184.4	2	HTP-Y00B	E1	FROM AMT SPLITTER TO AMT "A"
	MF	24" PVC	36.3	81.3	5BTV2	32.2	890	3184.4	2	HTP-Y00B	E2	FROM AMT SPLITTER TO AMT "F" (FUTURE)
	MF	24" PVC	25.8	55.2	5BTV2	32.2	608	2175.9	2	HTP-Y00B	E3	FROM AMT SPLITTER TO AMT "B"
	MF	24" PVC	25.8	55.2	5BTV2	32.2	608	2175.9	2	HTP-Y00B	E4	FROM AMT SPLITTER TO AMT "E" (FUTURE)
	MF	24" PVC	15.5	47.3	5BTV2	32.2	523	1873	2	HTP-Y00B	E5	FROM AMT SPLITTER TO AMT "C"
	MF	24" PVC	15.5	47.3	5BTV2	32.2	523	1873	2	HTP-Y00B	E6	FROM AMT SPLITTER TO AMT "D"
	PVRV-Y49	12" SST	–	–	10BTV2	–	110	1039.5	1	HTP-Y00B	V21-A	AM SPLITTER PRESSURE/VACUUM RELIEF VALVE, AMBIENT CONTROL
	BPE/DR	2" SST	3	3	5BTV2	5.4	16	84.6	1	HTP-Y00B	V21-B	AMT SPLITTER GATE DRAIN, V08-Y49
	BPE/DR	2" SST	3	3	5BTV2	5.4	16	84.6	1	HTP-Y00B	V21-C	AMT SPLITTER GATE DRAIN, V09-Y49
	BPE/DR	2" SST	3	3	5BTV2	5.4	16	84.6	1	HTP-Y00B	V21-D	AMT SPLITTER GATE DRAIN, V10-Y49
	BPE/DR	2" SST	3	3	5BTV2	5.4	16	84.6	1	HTP-Y00B	V21-E	AMT SPLITTER GATE DRAIN, V11-Y49
	BPE/DR	2" SST	3	3	5BTV2	5.4	16	84.6	1	HTP-Y00B	V21-F	AMT SPLITTER GATE DRAIN, V12-Y49
	BPE/DR	2" SST	3	3	5BTV2	5.4	16	84.6	1	HTP-Y00B	V21-G	AMT SPLITTER GATE DRAIN, V13-Y49
	BPE/DR	4" PVC	3	3	5BTV2	8.1	19	78	1	HTP-Y00B	V21-H	AMT SPLITTER DRAIN, V14-Y49
	VOG	3/4" PVC	89.3	89.3	3BTV2	2.9	203	589.2	1	HTP-Y00C	N8	PIPE GROUP – VOG CONDENSATE DRAIN
BIO: AREA G	FW	6" PVC	56	56	8BTV2	10.9	146	800.8	1	HTP-Y00A	A1	FROM CENTRALIZED SYSTEM EFFLUENT PUMPS TO RAD TW SUPPLY TANK
	GWTE	8" PVC	84.3	84.3	5BTV2	15.4	416	1603.1	1	HTP-Y00A	A2	FROM RAD TC-99 BAG FILTER TO EQ TANK
	GWTE	8" PVC	80.5	80.5	5BTV2	15.4	398	1533.8	1	HTP-Y00A	A3	FROM RAD TC-99 BAG FILTER TO EQ TANK
	SFA	1/2" SST	107.5	107.5	3BTV2	3.4	153	517.1	1	HTP-Y00A	A4-A	PIPE GROUP – SFA TO RAD
	GW	3" PVC	90	90	8BTV2	5.8	120	697.2	1	HTP-Y00A	A4-B	GW FROM YE4, CARTRIDGE FILTER TO EQ TANK
	GW	3" PVC	90	90	8BTV2	5.8	120	697.2	1	HTP-Y00A	A4-C	GW FROM YE8, CARTRIDGE FILTER TO EQ TANK
	GW	3" PVC	85	85	8BTV2	5.8	114	661.2	1	HTP-Y00A	A4-D	GW FROM YE14, BAG FILTERS TO EQ TANK
	UW	6" PVC	53.5	53.5	8BTV2	10.9	140	768	1	HTP-Y00A	A8	UTILITY WATER FROM RAD BUILDING
	TDR	3" PVC	56.5	179.2	8BTV2	5.8	227	1318.9	1	HTP-Y00A	B1-A	SUMP PUMP DISCHARGE FROM AREA B TO RECYCLE TANK
	DR	1-1/2" PVC	75	75	5BTV2	4.5	102	459	1	HTP-Y00A	B1-B	DRAIN LINES FROM PROCESS PIPING TO RCT-Y40, INCLUDING VALVES
	LIT-Y00A	3" PVC	3	3	8BTV2	5.8	16	90.6	1	HTP-Y00A	B1-C	V01-Y40L, LE-Y40L, V02-Y40L, TRACE FROM TANK TO DIAPHRAGM SEAL
	SN	2" PVC	58.8	58.8	5BTV2	4.5	83	367.1	1	HTP-Y00A	B2	FROM SN FEED SYSTEM TO RECYCLE TANK
	BDR	3" PVC	59.3	59.3	8BTV2	5.8	83	482.8	1	HTP-Y00A	B3	SUMP PUMP DISCHARGE FROM AREA L TO RECYCLE TANK
	FCR	4" PVC	65.8	65.8	5BTV2	8.1	170	689.4	1	HTP-Y00A	B4	FROM SOLIDS RECYCLE PUMPS TO RECYCLE TANK
	GWI	18" PVC	70	70	5BTV2	21.8	516	1873.1	2	HTP-Y00A	B5	FROM CENTRALIZED SYSTEM INFLUENT PUMPS TO RECYCLE TANK
	GWI	10" PVC	70	70	5BTV2	21.8	516	1873.1	2	HTP-Y00A	B5-1	FROM CENTRALIZED SYSTEM INFLUENT PUMPS TO RECYCLE TANK
	GWI	10" PVC	70	70	5BTV2	21.8	516	1873.1	2	HTP-Y00A	B5-2	FROM CENTRALIZED SYSTEM INFLUENT PUMPS TO RECYCLE TANK
	ASE/BYP	18" PVC	78.1	78.1	5BTV2	21.8	574	2084.3	2	HTP-Y00A	B6	FROM AIR STRIPPER EFFLUENT PUMPS TO RECYCLE TANK
	ASE/BYP	10" PVC	78.1	78.1	5BTV2	21.8	574	2084.3	2	HTP-Y00A	B6-1	FROM AIR STRIPPER EFFLUENT PUMPS TO RECYCLE TANK
	ASE/BYP	10" PVC	78.1	78.1	5BTV2	21.8	574	2084.3	2	HTP-Y00A	B6-2	FROM AIR STRIPPER EFFLUENT PUMPS TO RECYCLE TANK
	BPE/BYP	18" PVC	86.7	86.7	5BTV2	21.8	636	2308.7	2	HTP-Y00A	B7	FROM AERATION MEMBRANE PERMEATE PUMPS TO RECYCLE TANK
	BPE/BYP	10" PVC	86.7	86.7	5BTV2	21.8	636	2308.7	2	HTP-Y00A	B7-1	FROM AERATION MEMBRANE PERMEATE PUMPS TO RECYCLE TANK
	BPE/BYP	10" PVC	86.7	86.7	5BTV2	21.8	636	2308.7	2	HTP-Y00A	B7-2	FROM AERATION MEMBRANE PERMEATE PUMPS TO RECYCLE TANK
	BPI	20" PVC	115.3	115.3	5BTV2	25.1	980	3508.8	2	HTP-Y00A	B8	FROM RECYCLE TANK TO FBR INFLUENT PUMPS
	BPI	10" PVC	115.3	115.3	5BTV2	25.1	980	3508.8	2	HTP-Y00A	B8-1	FROM RECYCLE TANK TO FBR INFLUENT PUMPS
	BPI	10" PVC	115.3	115.3	5BTV2	25.1	980	3508.8	2	HTP-Y00A	B8-2	FROM RECYCLE TANK TO FBR INFLUENT PUMPS

CONTINUED ON SHEET 16

HEAT TRACE PIPING SCHEDULE (CONTINUED)

AREA/SHEET	PROCESS ID	SIZE MATL	LENGTH THIS SHEET FT	TOTAL PIPE LENGTH FT	CABLE SELECTION	TOTAL OUTPUT W/FT PIPE	ESTIMATED CABLE LENGTH, FT (NOTE 3)	TOTAL OUTPUT W	PNLBD CIRCUITS REQUIRED (NOTE 4)	FED FROM PANEL	RTD	HT ASSIGNMENT ID	REMARKS
ETB-1	VOG	6" SST	17.5	17.5	8BTV1	13.5	54	366	1	HTP-Y1A	RTD-E101	E101	SST PIPING TO VGT DRUMS. SEE NOTE 9.
	TOG	6" SST	30	30	8BTV1	13.5	84	589	1	HTP-Y1A	RTD-E102 RTD-E103	E102	SST PIPING FROM VGT DRUMS. SEE NOTE 9.
ETB-2	VOG	6" SST	27.5	27.5	8BTV1	13.5	78	528	1	HTP-Y2A	RTD-E201	E201	SST PIPING TO DRUMS VGT-Y2A AND VGT-Y2B. SEE NOTE 9.
	TOG	6" SST	30	30	8BTV1	13.5	84	569	1	HTP-Y2A	RTD-E202 RTD-E203	E202	SST PIPING FROM VGT DRUMS. SEE NOTE 9.
	VOG	6" SST	17.5	17.5	8BTV1	13.5	54	366	1	HTP-Y2A	RTD-E204	E204	SST PIPING TO DRUMS VGT-Y3A AND VGT-Y3B. SEE NOTE 9.
	TOG	6" SST	30	30	8BTV1	13.5	84	569	1	HTP-Y2A	RTD-E205 RTD-E206	E205	SST PIPING FROM VGT DRUMS. SEE NOTE 9.
ETB-3	VOG / TOG	–	–	–	–	–	–	–	–	HTP-Y4A	–	–	SEE H-2-833599 SHEET 25
RAD (NOTE 7)	GWT	4" PVC	5	5	8BTV1	7.6	24	912	–	HTP-Y21A	RTD-R1	R1	PVC PIPING BETWEEN BUILDING AND HDPE IN TRENCH
	GWT	4" PVC	5	5	8BTV1	7.6	24	912	–	HTP-Y21A	RTD-R2	R1	PVC PIPING BETWEEN BUILDING AND HDPE IN TRENCH
	~~GWT~~	~~4" PVC~~	~~5~~	~~5~~	~~8BTV1~~	~~7.6~~	~~24~~	~~912~~	–	~~HTP-Y21A~~	~~RTD-R3~~	~~R1~~	~~PVC PIPING BETWEEN BUILDING AND HDPE IN TRENCH~~
	LE	3" PIP (HDPE)	250	250	5BTV2	5.3	256	1480	1	HTP-Y00A	–	ERDF-1	HDPE PIPING IN TRENCH INCLUDING 5' INTO BERM AND 3' INTO BUILDING

NOTES

1. HEAT TRACE EXTERIOR PIPING FOR PURPOSE OF FREEZE PROTECTION.
2. GROUP PIPES AS SHOWN FOR GROUP CONTROL OF MULTIPLE PIPE BRANCHES.
3. ESTIMATED CABLE LENGTH INCLUDES A 20% ALLOWANCE FOR VALVES AND PIPE SUPPORTS AND AN ADDITIONAL 12 FT ALLOWANCE FOR TERMINATIONS. FINAL CABLE LENGTH MAY VARY FROM THIS SCHEDULE DEPENDING ON FIELD CONDITIONS. FOR PRESSURE/VACUUM RELIEF VALVES, SEE PIPE HEAT TRACING CABLE SCHEDULE, H-2-833599 SH 18 NOTE 10.
4. PANELBOARD CIRCUITS REQUIRED IS BASED ON ESTIMATED CABLE LENGTH AND MAXIMUM START-UP CURRENT AT °F. HEAT TRACE SYSTEMS AT THE BIO PROCESS BUILDING ARE SELECTED AT 277V, 20A. HEAT TRACE SYSTEMS AT THE RAD BUILDING AND TRANSFER BUILDINGS ARE SELECTED AT 120V, 20A. COORDINATE NUMBER OF PANELBOARD CIRCUITS REQUIRED FOR EACH HT BRANCH WITH FINAL CABLE LENGTH AND HEAT TRACE CABLE SCHEDULE.
5. NOT USED.
6. AREA/SHEET COLUMN REFERS TO BIO-PROCESS BUILDING KEY PLAN EXCEPT WHERE NOTED OTHERWISE. ETB = EXTRACTION TRANSFER BUILDING.
7. HEAT TRACE PIPING AT RAD BUILDING FROM THE HDPE PIPE ANCHOR (APPROXIMATELY 3 FEET FROM EXTERIOR WALL) TO THE FIRST FLANGE INSIDE THE BUILDING. TOTAL PIPE LENGTH LISTED IN THIS SCHEDULE IS APPROXIMATE.
8. NOT USED.
9. HEAT TRACE AND INSULATE 4" SST BRANCHES SAME AS 6" HEADERS. PROVIDE ONE RTD FOR EACH TOG AND VOG HEADER.
10. ESTIMATED CABLE LENGTHS INCLUDE ADDITIONAL 15' FOR TERMINATIONS AND ANY ADDITIONAL HOSE. TOTAL OUTPUT WATTS CALCULATED FOR 0° FAHRENHEIT STARTUP.

ECR-14-000762 Page 62

BLDG. NO.
289T
289TA
289TB
289TC
289TF

INDEX NO.

THIS SPACE RESERVED FOR BUILDING AND INDEX NUMBERS

DWG NO	TITLE
DRAWING TRACEABILITY LIST	

REF NUMBER	TITLE
H-2-833533	ELECTRICAL LEGEND
H-2-833526	INDEX OF DRAWINGS

REFERENCES

NEXT USED ON

REV	DESCRIPTION	REV BY DATE		
7	REVISED PER ECR-12-001365, & ECR-14-000014	ERW 10/14/14		
6	INCORP ECR-13-000778	DCB 1/20/14	GGB 1/20/14	RBR 1/20/14

REVISIONS

NAME		DATE
DRAWN BY M RARDIN	HDY FOR AE	7/20/10
J MCMURREN		7/20/10
D YEARSLEY		7/20/10
R SASSEN		7/20/10
R DENTON	HDY FOR BO	7/20/10
DESIGN AUTHORITY G EDWARDS		7/20/10

U.S. DEPARTMENT OF ENERGY
Richland Operations Office

ELECTRICAL
HEAT TRACE
PIPING SCHEDULES

SIZE D | BLDG NO SEE ABOVE | INDEX NO 7301 8200 | DWG NO H-2-833599 | REV 7

SCALE NONE | DCN-200W-069 | SHEET 15 OF

XXXX PLOTID XXXX

HEAT TRACE CABLE SCHEDULE

PIPING MATERIAL	PIPE SIZE, IN	DESIGN HEAT LOSS, W/FT	MAX CONTACT TEMP, °F	VOLTAGE NOMINAL	CABLE SIZE (NOTE 4)	CABLE OUTPUT, W/FT	MAX CIRCUIT LENGTH, FT (NOTE 9)	TRACE RATIO (NOTE 4) (NOTE 5)	TOTAL OUTPUT, W/FT	REMARKS
STAINLESS STEEL	1/2	2.4	N/A	277V	3BTV2	3.38	544	1	3.4	
	1	3.0	N/A	277V	3BTV2	3.38	544	1	3.4	
	1	3.0	N/A	277V	5BTV2	5.42	404	1	5.4	ALTERNATE CABLE SIZE (NOTE 8)
	2	4.4	N/A	277V	5BTV2	5.42	404	1	5.4	
	3	5.7	N/A	277V	8BTV2	8.42	293	1	8.4	
	6	11.5	N/A	120V	8BTV1	6.77	133	2	13.5	VOG/TOG AT EXTR TRANS BUILDINGS
	10	14.5	N/A	277V	8BTV2	8.42	293	2	16.8	
	24	30.0	N/A	277V	8BTV2	8.42	293	4	33.7	
	42	50.0	N/A	277V	8BTV2	8.42	293	6	50.5	
PVC (NOTE 7)	3/4	2.7	140	277V	3BTV2	2.90	632	1	2.9	
	1	3.0	137	277V	5BTV2	4.56	481	1	4.6	
	1-1/2	3.8	128	277V	5BTV2	4.50	487	1	4.5	
	2	4.3	122	277V	5BTV2	4.45	492	1	4.5	
	3	5.8	119	277V	8BTV2	5.81	424	1	5.8	
	4	7.0	113	277V	5BTV2	4.06	539	2	8.1	
	4	7.0	113	120V	5BTV1	3.80	250	2	7.6	RAD BUILDING ENTRY
	6	9.5	107	277V	8BTV2	5.47	450	2	10.9	
	8	12.0	101	277V	5BTV2	3.85	568	4	15.4	
	10	14.5	97	277V	5BTV2	3.74	586	4	15.0	
	12	16.8	97	277V	5BTV2	3.68	589	5	18.4	
	14	18.4	95	277V	5BTV2	3.68	589	5	18.4	
	16	20.6	95	277V	5BTV2	3.63	589	6	21.8	
	20	25.1	95	277V	5BTV2	3.58	589	7	25.1	
	24	30.0	92	277V	5BTV2	3.58	589	9	32.2	
PRESSURE/VACUUM RELIEF VALVES	SIZE, IN	DESIGN HEAT LOSS, W/FT	MAX CONTACT TEMP, °F	VOLTAGE NOMINAL	CABLE SIZE	CABLE OUTPUT, W/FT	MAX CIRCUIT LENGTH, FT (NOTE 9)	ESTIMATED CABLE LENGTH, FT (NOTE 10)	TOTAL OUTPUT, W	
STAINLESS STEEL	3	N/A	N/A	277V	10BTV2	9.45	239	24	226.8	
	6	N/A	N/A	277V	10BTV2	9.45	239	50	472.5	
	10	N/A	N/A	277V	10BTV2	9.45	239	80	756.0	
	12	N/A	N/A	277V	10BTV2	9.45	239	110	1039.5	

NOTES

1. HEAT TRACE EXTERIOR PIPING FOR PURPOSE OF FREEZE PROTECTION.
2. OUTDOOR DESIGN TEMPERATURE -24°F, MAINTAIN TEMPERATURE 50°F. CABLE SELECTION BASED ON A DESIGN TEMPERATURE DIFFERENTIAL OF 75°F. EXCEPTION: VOG/TOG PIPING AT EXTRACTION TRANSFER BUILDINGS SHALL BE DESIGNED FOR 65°F MAINTAIN TEMPERATURE.
3. FOR ADDITIONAL INFORMATION, REFER TO SPECIFICATION SECTION 40 05 33, PIPE HEAT TRACING.
4. HEAT TRACE CABLE SCHEDULE IS BASED ON RAYCHEM BTV SELF-REGULATING CABLE. OTHER MANUFACTURERS MAY REQUIRE AN ADJUSTMENT TO THE CABLE SIZE AND TRACE RATIO IN ORDER TO ACHIEVE THE OUTPUT SPECIFIED HERE FOR EACH PIPE SIZE AND MATERIAL. SEE NOTE 7.
5. SPIRALING OF HEAT TRACE CABLE IN ORDER TO ACHIEVE SPECIFIED HEAT TRACE RATIO IS NOT ALLOWED. INSTALL MULTIPLE CABLES IN PARALLEL WHEN THE REQUIRED HEAT TRACE RATIO IS GREATER THAN ONE. COORDINATE REQUIREMENTS WITH ELECTRICAL WORK AND SPECIFICATION SECTION 40 42 13, PROCESS PIPING INSULATION.
6. CABLE SIZE, NOMINAL OUTPUT, AND NO. OF PARALLEL CABLES FOR VALVES SHALL MATCH THOSE SELECTED FOR THE PIPE ON WHICH THE VALVE IS INSTALLED. ADJUST CABLE WRAP LENGTH AS REQUIRED BY MANUFACTURER FOR CABLE SIZE AND OUTPUT SELECTION, AND IN ACCORDANCE WITH SPECIFICATION SECTION 40 05 33, PIPE HEAT TRACING.
7. HEAT TRACE CABLE OUTPUT IS DERATED FOR PLASTIC PIPE. MAXIMUM CONTACT TEMPERATURE SHALL BE USED FOR SELECTING CABLE SIZE AND TRACE RATIO FOR OTHER MANUFACTURERS.
8. ALTERNATE CABLE SIZES ARE INTENDED FOR GROUP CIRCUITS WHERE THE MAIN PIPE AND BRANCH PIPES ARE HEATED WITH A COMMON CABLE ("LOOPED"). SEE HEAT TRACE PIPE SCHEDULE FOR CIRCUIT GROUPING.
9. MAX CIRCUIT LENGTH SHALL BE DETERMINED ON THE BASIS OF CIRCUIT AMP DRAW AT STARTUP TEMPERATURE OF 0°F IN ACCORDANCE WITH SPECIFICATION SECTION 40 05 33, PIPE HEAT TRACING.
10. ESTIMATED CABLE LENGTH FOR PRESSURE/VACUUM RELIEF VALVES IS BASED ON FULL COVERAGE OF VALVE, WITHOUT OVERLAPPING THE CABLE, PLUS 6 FT ALLOWANCE FOR TERMINATIONS.

ECR-14-000762 Page 43
"WAS CONDITION"

BLDG. NO.
289T
289TA
289TB
289TC

INDEX NO.

THIS SPACE RESERVED FOR BUILDING AND INDEX NUMBERS

DWG NO	TITLE
DRAWING TRACEABILITY LIST	

REF NUMBER	TITLE
H-2-833533	ELECTRICAL LEGEND
H-2-833526	INDEX OF DRAWINGS
REFERENCES	
NEXT USED ON	

REV	DATE	DESCRIPTION	DRAWN	CHK'D	APPR	CHG
1	2/6/14	REVISED PER DCN-280W-E79	JED	BLS	PWZ	

REVISIONS

NAME	DATE
M. RANDIN	
J. MCMURREN	
M. YEARSLEY	
S. BROWN	
R. DELTON	
SUPV ENGINEER CK EDWARDS	

U.S. DEPARTMENT OF ENERGY
Richland Operations Office

ELECTRICAL
HEAT TRACE
CABLE SCHEDULE

D | SCALE SEE LIST | CONTRACT 2501 8280 | DWG NO H-2-833589 | REV 1
NONE | DCN DCN-280W-056 | SHEET 18 OF

XXXX PLOTTED XXXX

HEAT TRACE CABLE SCHEDULE

PIPING MATERIAL	PIPE SIZE, IN	DESIGN HEAT LOSS, W/FT	MAX CONTACT TEMP, °F	VOLTAGE NOMINAL	CABLE SIZE (NOTE 4)	CABLE OUTPUT, W/FT	MAX CIRCUIT LENGTH, FT (NOTE 9)	TRACE RATIO (NOTE 4) (NOTE 5)	TOTAL OUTPUT, W/FT	REMARKS
STAINLESS STEEL	1/2	2.4	N/A	277V	3BTV2	3.38	544	1	3.4	
	1	3.0	N/A	277V	3BTV2	3.38	544	1	3.4	
	1	3.0	N/A	277V	5BTV2	5.42	404	1	5.4	ALTERNATE CABLE SIZE (NOTE 8)
	2	4.4	N/A	277V	5BTV2	5.42	404	1	5.4	
	3	5.7	N/A	277V	8BTV2	8.42	293	1	8.4	
	6	11.5	N/A	120V	8BTV1	6.77	133	2	13.5	VOG/TOG AT EXTR TRANS BUILDINGS
	10	14.5	N/A	277V	8BTV2	8.42	293	2	16.8	
	24	30.0	N/A	277V	8BTV2	8.42	293	4	33.7	
	42	50.0	N/A	277V	8BTV2	8.42	293	6	50.5	
PVC (NOTE 7)	3/4	2.7	140	277V	3BTV2	2.90	632	1	2.9	
	1	3.0	137	277V	5BTV2	4.56	481	1	4.6	
	1-1/2	3.8	128	277V	5BTV2	4.50	487	1	4.5	
	2	4.3	122	277V	5BTV2	4.45	492	1	4.5	
	3	5.8	119	277V	8BTV2	5.81	424	1	5.8	
	4	7.0	113	277V	5BTV2	4.06	539	2	8.1	
	4	7.0	113	120V	5BTV1	3.80	250	2	7.6	RAD BUILDING ENTRY
	6	9.5	107	277V	8BTV2	5.47	450	2	10.9	
	8	12.0	101	277V	5BTV2	3.85	568	4	15.4	
	10	14.5	97	277V	5BTV2	3.74	586	4	15.0	
	12	16.8	97	277V	5BTV2	3.68	589	5	18.4	
	14	18.4	95	277V	5BTV2	3.68	589	5	18.4	
	16	20.6	95	277V	5BTV2	3.63	589	6	21.8	
	20	25.1	95	277V	5BTV2	3.58	589	7	25.1	
	24	30.0	95	277V	5BTV2	3.58	589	8	28.6	
HDPE (NOTE 7)	3	4.9	149	277V	5BTV2	5.3	362	1	5.3	

PRESSURE/VACUUM RELIEF VALVES	SIZE, IN	DESIGN HEAT LOSS, W/FT	MAX CONTACT TEMP, °F	VOLTAGE NOMINAL	CABLE SIZE	CABLE OUTPUT, W/FT	MAX CIRCUIT LENGTH, FT (NOTE 9)	ESTIMATED CABLE LENGTH, FT (NOTE 10)	TOTAL OUTPUT, W
STAINLESS STEEL	3	N/A	N/A	277V	10BTV2	9.45	239	24	226.8
	6	N/A	N/A	277V	10BTV2	9.45	239	50	472.5
	10	N/A	N/A	277V	10BTV2	9.45	239	80	756.0
	12	N/A	N/A	277V	10BTV2	9.45	239	110	1039.5

NOTES

1. HEAT TRACE EXTERIOR PIPING FOR PURPOSE OF FREEZE PROTECTION.
2. OUTDOOR DESIGN TEMPERATURE -24°F, MAINTAIN TEMPERATURE 50°F. CABLE SELECTION BASED ON A DESIGN TEMPERATURE DIFFERENTIAL OF 75°F. EXCEPTION: VOG/TOG PIPING AT EXTRACTION TRANSFER BUILDINGS SHALL BE DESIGNED FOR 65°F MAINTAIN TEMPERATURE.
3. FOR ADDITIONAL INFORMATION, REFER TO SPECIFICATION SECTION 40 05 33, PIPE HEAT TRACING.
4. HEAT TRACE CABLE SCHEDULE IS BASED ON RAYCHEM BTV SELF-REGULATING CABLE. OTHER MANUFACTURERS MAY REQUIRE AN ADJUSTMENT TO THE CABLE SIZE AND TRACE RATIO IN ORDER TO ACHIEVE THE OUTPUT SPECIFIED HERE FOR EACH PIPE SIZE AND MATERIAL. SEE NOTE 7.
5. SPIRALING OF HEAT TRACE CABLE IN ORDER TO ACHIEVE SPECIFIED HEAT TRACE RATIO IS NOT ALLOWED. INSTALL MULTIPLE CABLES IN PARALLEL WHEN THE REQUIRED HEAT TRACE RATIO IS GREATER THAN ONE. COORDINATE REQUIREMENTS WITH ELECTRICAL WORK AND SPECIFICATION SECTION 40 42 13, PROCESS PIPING INSULATION.
6. CABLE SIZE, NOMINAL OUTPUT, AND NO. OF PARALLEL CABLES FOR VALVES SHALL MATCH THOSE SELECTED FOR THE PIPE ON WHICH THE VALVE IS INSTALLED. ADJUST CABLE WRAP LENGTH AS REQUIRED BY MANUFACTURER FOR CABLE SIZE AND OUTPUT SELECTION, AND IN ACCORDANCE WITH SPECIFICATION SECTION 40 05 33, PIPE HEAT TRACING.
7. HEAT TRACE CABLE OUTPUT IS DERATED FOR PLASTIC PIPE. MAXIMUM CONTACT TEMPERATURE SHALL BE USED FOR SELECTING CABLE SIZE AND TRACE RATIO FOR OTHER MANUFACTURERS.
8. ALTERNATE CABLE SIZES ARE INTENDED FOR GROUP CIRCUITS WHERE THE MAIN PIPE AND BRANCH PIPES ARE HEATED WITH A COMMON CABLE ("LOOPED"). SEE HEAT TRACE PIPE SCHEDULE FOR CIRCUIT GROUPING.
9. MAX CIRCUIT LENGTH SHALL BE DETERMINED ON THE BASIS OF CIRCUIT AMP DRAW AT STARTUP TEMPERATURE OF 0°F IN ACCORDANCE WITH SPECIFICATION SECTION 40 05 33, PIPE HEAT TRACING.
10. ESTIMATED CABLE LENGTH FOR PRESSURE/VACUUM RELIEF VALVES IS BASED ON FULL COVERAGE OF VALVE, WITHOUT OVERLAPPING THE CABLE, PLUS 6 FT ALLOWANCE FOR TERMINATIONS.

BLDG. NO.
289T
289TA
289TB
289TC

INDEX NO.

THIS SPACE RESERVED FOR BUILDING AND INDEX NUMBERS

DRAWING TRACEABILITY LIST			
DWG NO	TITLE	REFERENCES	
		H-2-833533	ELECTRICAL LEGEND
		H-2-833526	INDEX OF DRAWINGS
		REF NUMBER	TITLE
		NEXT USED ON	

REVISIONS					
SYM	DESCRIPTION	DWN	CHK	APPR	DATE
A	REVISED PER DCN-208W-Z79	JED	BLS	PWZ	12/6/12 12/20/12 1/18/12

	NAME	DATE
DWN BY	M. HARDIN	7/19/12
CHK BY	J. MCMURREN	7/20/12
APPR BY	D. YCARDLEY	7/20/12
CHK BY	SK GROW	7/20/12
APPR BY	R. DENTON	7/20/12
SCHED ENGINEER	GA EDWARDS	7/19/12

U.S. DEPARTMENT OF ENERGY
Richland Operations Office

TITLE
ELECTRICAL
HEAT TRACE
CABLE SCHEDULE

SIZE	FSCM NO	DWG NO	REV
D	SEE LIST	7001 8280	H-2-833599 1

SCALE NONE SHEET 18 OF

XXXX PLOTID XXXX

ECR-14-000762 Page 64

PANEL: HTP-Y00A
SERVICE VOLTAGE: 480/277V
TOTAL LOAD KVA: 71.8
REMARKS: HEAT TRACE
SCHEDULE ON DRAWING: H-2-833599-19
LOCATION: BIO PROCESS TREATMENT PAD
PHASE: 3 WIRE: 4 SCCR: 35,000
BUS SIZE: 225A MAIN SIZE: 200A TYPE: BRKR
NEUTRAL: FULL MOUNTING: FLOOR FED FROM: MSB-Y00B

LOAD IN VA A	LOAD IN VA B	LOAD IN VA C	CIRCUIT DESCRIPTION	BKR A/P	CKT NO.	CKT NO.	BKR A/P	CIRCUIT DESCRIPTION	LOAD IN VA A	LOAD IN VA B	LOAD IN VA C
1301.9			BRANCH A1	20/1	1	2	20/1	BRANCH C4	886.4		
	2963.9		BRANCH A2	20/1	3	4	20/1	BRANCH C5		886.4	
		2853.1	BRANCH A3	20/1	5	5	20/1	BRANCH D5-A, B, C, D			1440.4
4040.6			BRANCH A4-A, B, C, D	20/1	7	8	20/1	BRANCH C7, CIRCUIT 1A, B, C, D, E	3157.6		
	1274.2		BRANCH A6	20/1	9	10	20/1	BRANCH C7, CIRCUIT 2A, B, C		2659.2	
		3213.2	BRANCH B1-A, B	20/1	11	12	20/1	BRANCH D1A, B			2659.2
747.9			BRANCH B2	20/1	13	14	20/1	BRANCH D2-A, B	2657.2		
	775.6		BRANCH B3	20/1	15	16	20/1	BRANCH V23		986.2	
		1301.9	BRANCH B4	20/1	17	18	20/1	BRANCH D4			2409.9
1800.5			BRANCH B5, CIRCUIT 1	20/1	19	20	20/1	BRANCH V13-A, B, C, D, E, F, G, H, I, J, K, L, M, N, O	3961.1		
	1800.5		BRANCH B5, CIRCUIT 2	20/1	21	22	20/1	BRANCH V14-A, B		1634.3	
		1994.4	BRANCH B6, CIRCUIT 1	20/1	23	24	20/1	BRANCH V15-A, B			914.1
1994.4			BRANCH B6, CIRCUIT 2	20/1	25	26	20/1	BRANCH V16	332.4		
	2188.3		BRANCH B7, CIRCUIT 1	20/1	27	28	20/1	BRANCH V17-A, B		914.1	
		2188.3	BRANCH B7, CIRCUIT 2	20/1	29	30	20/1	BRANCH V18			332.4
3268.6			BRANCH B8, CIRCUIT 1	20/1	31	32	20/1	BRANCH C2-A, B, C, D, E, F, G	1440.4		
	3268.6		BRANCH B8, CIRCUIT 2	20/1	33	34	20/1	BRANCH V22		856.6	
		1108.0	BRANCH C1-A, B, C, D	20/1	35	36	20/2	HTPC-Y00A			2500.0
			SPACE		37	38			2500.0		
			SPACE		39	40	15/2	CONTROL MODULE RELAY POWER		300.0	
			SPACE		41	42					300.0
13153.9	12271.1	12658.9	TOTAL						14935.1	8240.8	10556.0

LAST UPDATE: REV 11 H-2-833599 SH 19

PANEL: HTP-Y00C
SERVICE VOLTAGE: 480/277V
TOTAL LOAD KVA: 69.3
REMARKS: HEAT TRACE
SCHEDULE ON DRAWING: H-2-833599-19
LOCATION: BIO PROCESS TREATMENT PAD
PHASE: 3 WIRE: 4 SCCR: 35,000
BUS SIZE: 225A MAIN SIZE: 200A TYPE: BRKR
NEUTRAL: FULL MOUNTING: FLOOR FED FROM: MSB-Y00B

LOAD IN VA A	LOAD IN VA B	LOAD IN VA C	CIRCUIT DESCRIPTION	BKR A/P	CKT NO.	CKT NO.	BKR A/P	CIRCUIT DESCRIPTION	LOAD IN VA A	LOAD IN VA B	LOAD IN VA C
3379.4			BRANCH H1 (FUTURE), H4 (FUTURE)	20/1	1	2	20/1	BRANCH N1	3324.0		
	2908.5		BRANCH H2 (FUTURE), H3 (FUTURE)	20/1	3	4	20/1	BRANCH N5		2409.9	
		1662.0	BRANCH H5	20/1	5	6	20/1	BRANCH N8			747.9
2022.1			BRANCH H6	20/1	7	8	20/1	BRANCH O1	1966.7		
	2077.5		BRANCH H7	20/1	9	10	20/1	BRANCH O4-A, B, C, D, E, F		1135.7	
		2243.7	BRANCH J1-A, B	20/1	11	12	20/1	BRANCH P1-A, B, C			997.2
1523.5			BRANCH J2	20/1	13	14	20/1	BRANCH P2	166.2		
	858.7		BRANCH J3-A, B, C	20/1	15	16	20/1	BRANCH P3		443.2	
		1163.4	BRANCH J4	20/1	17	18	20/1	BRANCH P4			775.6
2991.6			BRANCH K1, CIRCUIT 1	20/1	19	20	20/1	BRANCH V1	1108.0		
	3684.1		BRANCH K1, CIRCUIT 2	20/1	21	22	20/1	BRANCH V2-A THRU N, P & Q		2599.8	
		3684.1	BRANCH K1, CIRCUIT 3	20/1	23	24	20/1	BRANCH V3			2437.6
1108.0			BRANCH K5, CIRCUIT 1	20/1	25	26	20/1	BRANCH V4	1108.0		
	2437.6		BRANCH K5, CIRCUIT 2-A, B, C, D, E, F, G, H, I	20/1	27	28	20/1	BRANCH V5-A THRU N, P &Q		2599.8	
		2437.6	BRANCH K5, CIRCUIT 3-A, B, C, D, E, F, G, H, I	20/1	29	30	20/1	BRANCH V6			803.3
2409.9			BRANCH L1	20/1	31	32	20/1	BRANCH M5	808.8		
	1385.0		BRANCH L5	20/1	33	34	20/1	SPARE			
		2299.1	BRANCH M1	20/1	35	36	20/2	HTPC-Y00C			2500.0
			SPACE		37	38			2500.0		
			SPACE		39	40	15/2	CONTROL MODULE RELAY POWER		300.0	
			SPACE		41	42					300.0
13434.5	13351.4	13489.9	TOTAL						10981.7	9488.4	8561.6

LAST UPDATE: REV 11 H-2-833599 SH 19

PANEL: HTP-Y00B
SERVICE VOLTAGE: 480/277V
TOTAL LOAD KVA: 77.1
REMARKS: HEAT TRACE
SCHEDULE ON DRAWING: H-2-833599-19
LOCATION: BIO PROCESS TREATMENT PAD
PHASE: 3 WIRE: 4 SCCR: 35,000
BUS SIZE: 225A MAIN SIZE: 200A TYPE: BRKR
NEUTRAL: FULL MOUNTING: FLOOR FED FROM: MSB-Y00A

LOAD IN VA A	LOAD IN VA B	LOAD IN VA C	CIRCUIT DESCRIPTION	BKR A/P	CKT NO.	CKT NO.	BKR A/P	CIRCUIT DESCRIPTION	LOAD IN VA A	LOAD IN VA B	LOAD IN VA C
2825.4			BRANCH E1, CIRCUIT 1	20/1	1	2	20/1	BRANCH F3-A, B, C, D, E	1662.0		
	2825.4		BRANCH E1, CIRCUIT 2	20/1	3	4	20/1	BRANCH F4-A, B, C, D, E		2132.9	
		1287.6	EDUCTOR HOSE TERMINAL BOX, BRANCH C8-A, B	20/1	5	6	20/1	BRANCH G1-A, B			2326.8
895.4			EDUCTOR HOSE TERMINAL BOX, BRANCH C9-A, B	20/1	7	8	20/1	BRANCH G2-A, B	2326.8		
	1994.4		BRANCH E3, CIRCUIT 1	20/1	9	10	20/1	BRANCH G3-A, B, C, D, E		2216.0	
		1994.4	BRANCH E3, CIRCUIT 2	20/1	11	12	20/1	BRANCH G4-A, B, C, D, E			2216.0
1994.4			BRANCH E4, CIRCUIT 1 (FUTURE)	20/1	13	14	20/1	BRANCH V7	1108.0		
	1994.4		BRANCH E4, CIRCUIT 2 (FUTURE)	20/1	15	16	20/1	BRANCH V8		1108.0	
		1745.1	BRANCH E5, CIRCUIT 1	20/1	17	18	20/1	BRANCH V9, V11 (FUTURE)			1108.0
1745.1			BRANCH E5, CIRCUIT 2	20/1	19	20	20/1	BRANCH V10, V12 (FUTURE)	1108.0		
	1745.1		BRANCH E6, CIRCUIT 1	20/1	21	22	20/1	BRANCH F5, CIRCUIT 1		2631.5	
		1745.1	BRANCH E6, CIRCUIT 2	20/1	23	24	20/1	BRANCH F6			2631.5
3130.1			BRANCH E7, CIRCUIT 1	20/1	25	26	20/1	BRANCH V21-A, B, C, D, E, F, G, H	2354.5		
	3130.1		BRANCH E7, CIRCUIT 2	20/1	27	28	20/1	BRANCH F5, CIRCUIT 2		2631.0	
		3130.1	BRANCH E7, CIRCUIT 3	20/1	29	30	20/1	BRANCH E8, CIRCUIT 1A, B			520.0
2077.5			BRANCH E7, CIRCUIT 4-A, B	20/1	31	32	20/1	F1-A, B	2271.4		
	2326.8		BRANCH E8, CIRCUIT 1	20/1	33	34	20/1	F2-A, B		2271.4	
		2326.8	BRANCH E8, CIRCUIT 2	20/1	35	36	20/2	HTPC-Y00B			2500.0
			SPACE		37	38			2500.0		
			SPACE		39	40	15/2	CONTROL MODULE RELAY POWER		300.0	
			SPACE		41	42					300.0
12667.9	14016.2	12229.1	TOTAL						13330.7	13290.5	11802.3

LAST UPDATE: REV 11 H-2-833599 SH 19

PANEL: HTP-Y21A
SERVICE VOLTAGE: 208Y/120V
TOTAL LOAD KVA: 0.8
REMARKS: HEAT TRACE PANEL
SCHEDULE ON DRAWING: H-2-833599-19
LOCATION: RAD BUILDING
PHASE: 3 WIRE: 4 SCCR: 35,000
BUS SIZE: 100A MAIN SIZE: MLO TYPE: MLO
NEUTRAL: FULL MOUNTING: SURFACE FED FROM: LT-Y21D

LOAD IN VA A	LOAD IN VA B	LOAD IN VA C	CIRCUIT DESCRIPTION	BKR A/P	CKT NO.	CKT NO.	BKR A/P	CIRCUIT DESCRIPTION	LOAD IN VA A	LOAD IN VA B	LOAD IN VA C
547.2			BRANCH R1	20/1	1	2	20/1	SPARE	0.0		
	0.0		SPARE	20/1	3	4	20/1	SPARE		0.0	
		0.0	SPARE	20/1	5	6	20/1	SPARE			0.0
			SPARE	20/1	7	8	20/1	SPARE			
			SPARE	20/1	9	10	20/1	SPARE			
			SPACE		11	12		SPACE			
			SPACE		13	14		SPACE			
			SPACE		15	16		SPACE			
			SPACE		17	18	20/1	CONTROL MODULE RELAY POWER			250.0
547.2	0.0	0.0	TOTAL						0.0	0.0	250.0

LAST UPDATE: REV 11 H-2-833599 SH 19

ECR-14-000762 Page 65
"WAS CONDITION"

DWG NO	TITLE
	DRAWING TRACEABILITY LIST

REFERENCES	
H-2-833533	ELECTRICAL LEGEND
H-2-833526	INDEX OF DRAWINGS
REF NUMBER	TITLE
NEXT USED ON	

REV	DATE	DESCRIPTION	BY	CHK	APP
11		REVISED PER ECR-14-001169	ERW		
10		REVISED PER ECR-12-001365	ERW	CGB	JAM

REVISIONS

NAME	DATE
DRAWN BY W. RARDIN	7/11/01
CHECKED BY J. MCMURREN	7/11/01
DESIGN AGENT D. YEARSLEY	7/11/01
ENGINEER R. SASSEN	7/11/01
ENGINEER R. DEMION	7/11/01
DESIGN AUTHORITY C. EDWARDS	7/11/01

U.S. DEPARTMENT OF ENERGY
Richland Operations Office

ELECTRICAL
HEAT TRACE
PANELBOARD SCHEDULES

SIZE	ALSO USED ON	DRAWING NO	REV
D	2997 2997A 2004	H-2-833599	11

SCALE NONE SHT DCN-2000-066 SHEET 19 OF

XXXX PLOTTED XXXX

PANEL: HTP-Y00A
SERVICE VOLTAGE: 480/277V
TOTAL LOAD, KVA: 74.6
REMARKS: HEAT TRACE
SCHEDULE ON DRAWING: H-2-833599-19

LOCATION: BIO PROCESS TREATMENT PAD
PHASE: 3 WIRE: 4 SCCR: 35,000
BUS SIZE: 225A MAIN SIZE: 200A TYPE: BRKR
NEUTRAL: FULL MOUNTING: FLOOR FED FROM: MSB-Y00B

LOAD IN VA A	LOAD IN VA B	LOAD IN VA C	CIRCUIT DESCRIPTION	BKR A/P	CKT NO.	CKT NO.	BKR A/P	CIRCUIT DESCRIPTION	LOAD IN VA A	LOAD IN VA B	LOAD IN VA C
4071.0			ERDF-1 AND RAD BUILDING	20/1	1	2	20/1	BRANCH C4	886.4		
	2963.9		BRANCH A2	20/1	3	4	20/1	BRANCH C5		886.4	
		2853.1	BRANCH A3	20/1	5	6	20/1	BRANCH D5-A, B, C, D			1440.4
4040.6			BRANCH A4-A, B, C, D	20/1	7	8	20/1	BRANCH C7, CIRCUIT 1A, B, C, D, E	3157.6		
	1274.2		BRANCH A1 AND A6	20/1	9	10	20/1	BRANCH C7, CIRCUIT 2A, B, C		2659.2	
		3213.2	BRANCH B1-A, B	20/1	11	12	20/1	BRANCH D1A, B			2659.2
747.9			BRANCH B2	20/1	13	14	20/1	BRANCH D2-A, B	2657.2		
	775.6		BRANCH B3	20/1	15	16	20/1	BRANCH V23		986.2	
		1301.9	BRANCH B4	20/1	17	18	20/1	BRANCH D4			2409.9
1800.5			BRANCH B5, CIRCUIT 1	20/1	19	20	20/1	BRANCH V13-A, B, C, D, E, F, G, H, I, J, K, L, M, N, O	3961.1		
	1800.5		BRANCH B5, CIRCUIT 2	20/1	21	22	20/1	BRANCH V14-A, B		1634.3	
		1994.4	BRANCH B6, CIRCUIT 1	20/1	23	24	20/1	BRANCH V15-A, B			914.1
1994.4			BRANCH B6, CIRCUIT 2	20/1	25	26	20/1	BRANCH V16	332.4		
	2188.3		BRANCH B7, CIRCUIT 1	20/1	27	28	20/1	BRANCH V17-A, B		914.1	
		2188.3	BRANCH B7, CIRCUIT 2	20/1	29	30	20/1	BRANCH V18			332.4
3268.6			BRANCH B8, CIRCUIT 1	20/1	31	32	20/1	BRANCH C2-A, B, C, D, E, F, G	1440.4		
	3268.6		BRANCH B8, CIRCUIT 2	20/1	33	34	20/1	BRANCH V22		858.6	
		1108.0	BRANCH C1-A, B, C, D	20/1	35	36	20/2	HTPC-Y00A			2500.0
			SPACE		37	38			2500.0		
			SPACE		39	40	15/2	CONTROL MODULE RELAY POWER		300.0	
			SPACE		41	42					300.0
15923.0	12271.1	12658.9			TOTAL				14935.1	8240.8	10556.0

LAST UPDATE: REV 12 H-2-833599 SH 19

PANEL: HTP-Y00C
SERVICE VOLTAGE: 480/277V
TOTAL LOAD KVA: 69.3
REMARKS: HEAT TRACE
SCHEDULE ON DRAWING: H-2-833599-19

LOCATION: BIO PROCESS TREATMENT PAD
PHASE: 3 WIRE: 4 SCCR: 35,000
BUS SIZE: 225A MAIN SIZE: 200A TYPE: BRKR
NEUTRAL: FULL MOUNTING: FLOOR FED FROM: MSB-Y00B

LOAD IN VA A	LOAD IN VA B	LOAD IN VA C	CIRCUIT DESCRIPTION	BKR A/P	CKT NO.	CKT NO.	BKR A/P	CIRCUIT DESCRIPTION	LOAD IN VA A	LOAD IN VA B	LOAD IN VA C
3379.4			BRANCH H1 (FUTURE), H4 (FUTURE)	20/1	1	2	20/1	BRANCH N1	3324.0		
	2908.5		BRANCH H2 (FUTURE), H3 (FUTURE)	20/1	3	4	20/1	BRANCH N5		2409.9	
		1662.0	BRANCH H5	20/1	5	6	20/1	BRANCH N8			747.9
2022.1			BRANCH H6	20/1	7	8	20/1	BRANCH O1	1966.7		
	2077.5		BRANCH H7	20/1	9	10	20/1	BRANCH O4-A, B, C, D, E, F		1135.7	
		2243.7	BRANCH J1-A, B	20/1	11	12	20/1	BRANCH P1-A, B, C			997.2
1523.5			BRANCH J2	20/1	13	14	20/1	BRANCH P2	166.2		
	858.7		BRANCH J3-A, B, C	20/1	15	16	20/1	BRANCH P3		443.2	
		1163.4	BRANCH J4	20/1	17	18	20/1	BRANCH P4			775.6
2991.6			BRANCH K1, CIRCUIT 1	20/1	19	20	20/1	BRANCH V1	1108.0		
	3684.1		BRANCH K1, CIRCUIT 2	20/1	21	22	20/1	BRANCH V2-A THRU N, P & Q		2599.8	
		3684.1	BRANCH K1, CIRCUIT 3	20/1	23	24	20/1	BRANCH V3			2437.6
1108.0			BRANCH K5, CIRCUIT 1	20/1	25	26	20/1	BRANCH V4	1108.0		
	2437.6		BRANCH K5, CIRCUIT 2-A, B, C, D, E, F, G, H, I	20/1	27	28	20/1	BRANCH V5-A THRU N, P &Q		2599.8	
		2437.6	BRANCH K5, CIRCUIT 3-A, B, C, D, E, F, G, H, I	20/1	29	30	20/1	BRANCH V6			803.3
2409.9			BRANCH L1	20/1	31	32	20/1	BRANCH M5	808.8		
	1385.0		BRANCH L5	20/1	33	34	20/1	SPARE			
		2299.1	BRANCH M1	20/1	35	36	20/2	HTPC-Y00C			2500.0
			SPACE		37	38			2500.0		
			SPACE		39	40	15/2	CONTROL MODULE RELAY POWER		300.0	
			SPACE		41	42					300.0
13434.5	13351.4	13489.9			TOTAL				10981.7	9488.4	8561.6

LAST UPDATE: REV 11 H-2-833599 SH 19

PANEL: HTP-Y00B
SERVICE VOLTAGE: 480/277V
TOTAL LOAD KVA: 77.1
REMARKS: HEAT TRACE
SCHEDULE ON DRAWING: H-2-833599-19

LOCATION: BIO PROCESS TREATMENT PAD
PHASE: 3 WIRE: 4 SCCR: 35,000
BUS SIZE: 225A MAIN SIZE: 200A TYPE: BRKR
NEUTRAL: FULL MOUNTING: FLOOR FED FROM: MSB-Y00A

LOAD IN VA A	LOAD IN VA B	LOAD IN VA C	CIRCUIT DESCRIPTION	BKR A/P	CKT NO.	CKT NO.	BKR A/P	CIRCUIT DESCRIPTION	LOAD IN VA A	LOAD IN VA B	LOAD IN VA C
2825.4			BRANCH E1, CIRCUIT 1	20/1	1	2	20/1	BRANCH F3-A, B, C, D, E	1662.0		
	2825.4		BRANCH E1, CIRCUIT 2	20/1	3	4	20/1	BRANCH F4-A, B, C, D, E		2132.9	
		1287.6	EDUCTOR HOSE TERMINAL BOX, BRANCH C8-A, B	20/1	5	6	20/1	BRANCH G1-A, B			2326.8
895.4			EDUCTOR HOSE TERMINAL BOX, BRANCH C9-A, B	20/1	7	8	20/1	BRANCH G2-A, B	2326.8		
	1994.4		BRANCH E3, CIRCUIT 1	20/1	9	10	20/1	BRANCH G3-A, B, C, D, E		2216.0	
		1994.4	BRANCH E3, CIRCUIT 2	20/1	11	12	20/1	BRANCH G4-A, B, C, D, E			2216.0
1994.4			BRANCH E4, CIRCUIT 1 (FUTURE)	20/1	13	14	20/1	BRANCH V7	1108.0		
	1994.4		BRANCH E4, CIRCUIT 2 (FUTURE)	20/1	15	16	20/1	BRANCH V8		1108.0	
		1745.1	BRANCH E5, CIRCUIT 1	20/1	17	18	20/1	BRANCH V9, V11 (FUTURE)			1108.0
1745.1			BRANCH E5, CIRCUIT 2	20/1	19	20	20/1	BRANCH V10, V12 (FUTURE)	1108.0		
	1745.1		BRANCH E6, CIRCUIT 1	20/1	21	22	20/1	BRANCH F5, CIRCUIT 1		2631.5	
		1745.1	BRANCH E6, CIRCUIT 2	20/1	23	24	20/1	BRANCH F6			2631.5
3130.1			BRANCH E7, CIRCUIT 1	20/1	25	26	20/1	BRANCH V21-A, B, C, D, E, F, G, H	2354.5		
	3130.1		BRANCH E7, CIRCUIT 2	20/1	27	28	20/1	BRANCH F5, CIRCUIT 2		2631.0	
		3130.1	BRANCH E7, CIRCUIT 3	20/1	29	30	20/1	BRANCH E9, CIRCUIT 1A, B			520.0
2077.5			BRANCH E7, CIRCUIT 4-A, B	20/1	31	32	20/1	F1-A, B	2271.4		
	2326.8		BRANCH E8, CIRCUIT 1	20/1	33	34	20/1	F2-A, B		2271.4	
		2326.8	BRANCH E8, CIRCUIT 2	20/1	35	36	20/2	HTPC-Y00B			2500.0
			SPACE		37	38			2500.0		
			SPACE		39	40	15/2	CONTROL MODULE RELAY POWER		300.0	
			SPACE		41	42					300.0
12667.9	14016.2	12229.1			TOTAL				13330.7	13298.8	11602.3

LAST UPDATE: REV 11 H-2-833599 SH 19

PANEL: HTP-Y21A
SERVICE VOLTAGE: 208V/120V
TOTAL LOAD KVA: 0.8
REMARKS: HEAT TRACE PANEL
SCHEDULE ON DRAWING: H-2-833599-19

LOCATION: RAD BUILDING
PHASE: 3 WIRE: 4 SCCR: 35,000
BUS SIZE: 100A MAIN SIZE: MLO TYPE: MLO
NEUTRAL: FULL MOUNTING: SURFACE FED FROM: LT-Y21D

LOAD IN VA A	LOAD IN VA B	LOAD IN VA C	CIRCUIT DESCRIPTION	BKR A/P	CKT NO.	CKT NO.	BKR A/P	CIRCUIT DESCRIPTION	LOAD IN VA A	LOAD IN VA B	LOAD IN VA C
547.2			BRANCH R1	20/1	1	2	20/1	SPARE	0.0		
	0.0		SPARE	20/1	3	4	20/1	SPARE		0.0	
		0.0	SPARE	20/1	5	6	20/1	SPARE			0.0
			SPARE	20/1	7	8	20/1	SPARE			
			SPARE	20/1	9	10	20/1	SPARE			
			SPACE		11	12		SPACE			
			SPACE		13	14		SPACE			
			SPACE		15	16		SPACE			
			SPACE		17	18	20/1	CONTROL MODULE RELAY POWER			250.0
547.2	0.0	0.0			TOTAL				0.0	0.0	250.0

LAST UPDATE: REV 11 H-2-833599 SH 19

DWG NO	TITLE
H-2-833533	ELECTRICAL LEGEND
H-2-833526	INDEX OF DRAWINGS
REF NUMBER	TITLE

DRAWING TRACEABILITY LIST — REFERENCES — NEXT USED ON

REV	DESCRIPTION	DWN	CHK	APP	DATE
11	REVISED PER ECR-14-001162	ERW			10/11/14
10	REVISED PER ECR-12-001365	ERW	GGP	JAL	10/18/12 10/20/12 10/30/12

REVISIONS

NAME / SIGNATURE / DATE
DRAWN BY M. RARDIN
TECH REVIEW J. MCMURREN
DESIGN ENGINEER D. YEARSLEY
SUPV ENGINEER B. SASSEN
PROJECT ENGINEER R. DENTON
SAFETY ENGINEER G. EDWARDS

U.S. DEPARTMENT OF ENERGY
Richland Operations Office

TITLE: ELECTRICAL HEAT TRACE PANELBOARD SCHEDULES

SIZE D | CODE IDENT 28ST | CODE NO 7804 | DWG NO H-2-833599 | REV 11
SCALE NONE | REF DCN-280W-068 | SHEET 19 OF

XXXX PLOTTED XXXX

ECR-14-000762 Page 46

DWG NO H-2-833610 SH 1 OF 11 REV 9

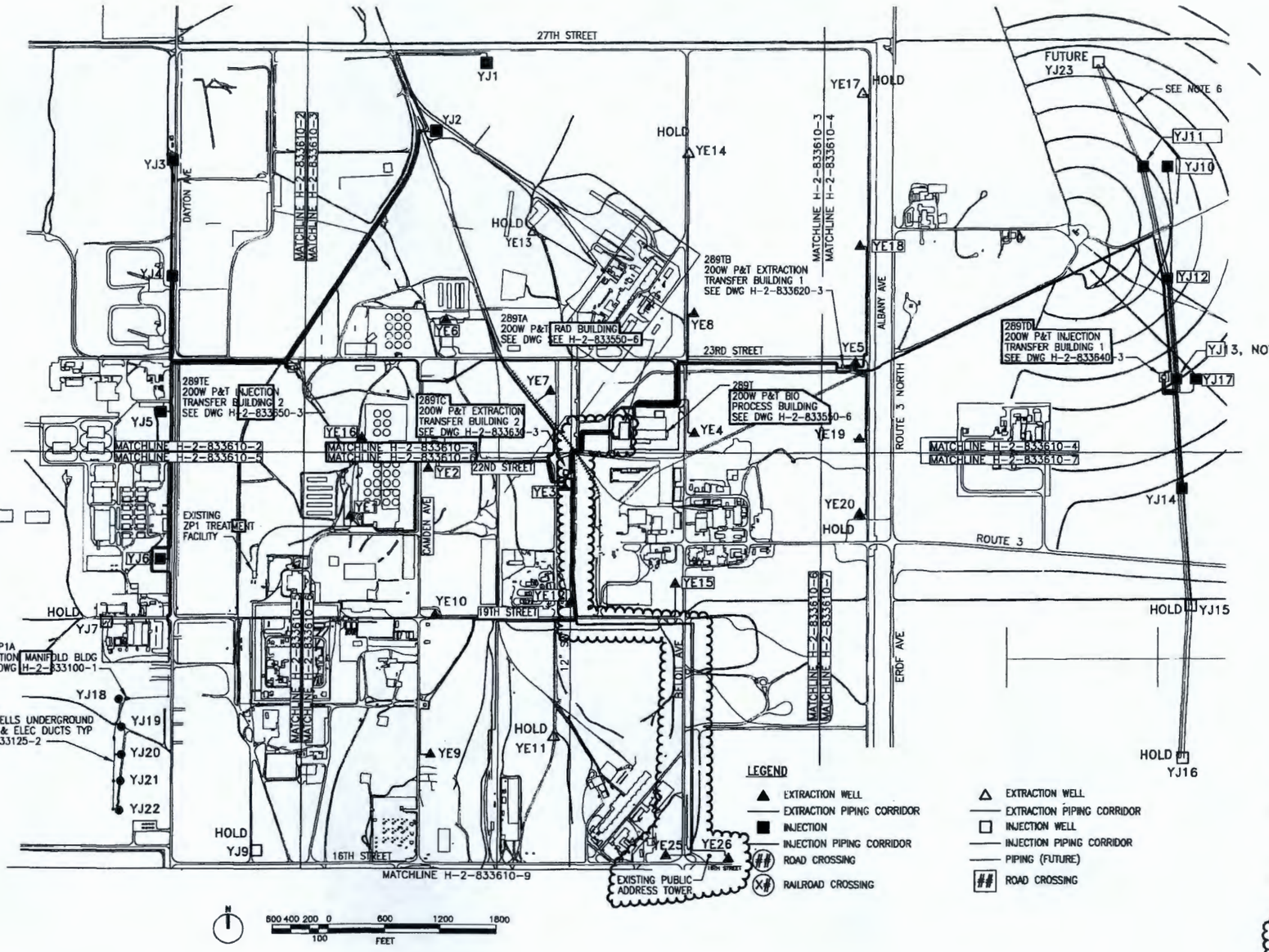

EXTRACTION WELLS			
FROM	TO	LENGTH (FT)	NOTE
YE1	289TC	3135.00	NOTE 1
YE2	289TC	1650.00	NOTE 1
YE3	289TC	88.00	NOTE 1
YE4	289T	1392.00	NOTE 1
YE5	289TB	213.00	NOTE 1
YE6	289TC	1356.00	NOTE 1
YE7	289TC	2724.00	NOTE 1
YE8	289T	1578.00	NOTE 1
YE9	289TC	4307.00	NOTE 1
YE10	289TC	3235.00	NOTE 2
YE11	289TC	3690.62	NOTE 2
YE12	289TC	1192.00	NOTE 1
YE13	289TC	4812.23	NOTE 2
YE14	289T	4056.37	NOTE 2
YE15	289TC	1676.00	NOTE 1
YE16	289TC	1097.00	NOTE 1
YE17	289TB	3887.74	NOTE 2
YE18	289TB	1627.00	NOTE 1
YE19	289TB	1187.00	NOTE 1
YE20	289TB	2269.00	NOTE 2
YE21	289TF	2100.00	--
YE22	289TF	1415.00	--
YE23	289TF	1400.00	
YE25	289TA	7710.00	NOTE 7
YE26	289TA	7935.00	NOTE 7

EXTRACTION TRANSFER LINES			
FROM	TO	LENGTH (FT)	NOTE
289TB (2)	289T	2341.00 (EA)	NOTE 1
289TC (2)	289T	1808.35 (EA)	--
289TC (2)	289TA	1260.64 (EA)	--
289TF (1)	289TA	10948.00	--

INJECTION WELLS			
TO	FROM	LENGTH (FT)	NOTE
YJ1	289TE	5989.00	NOTE 1
YJ2	289TE	3290.00	NOTE 1
YJ3	289TE	4385.00	NOTE 1
YJ4	289TE	2762.00	NOTE 1
YJ5	289TE	2042.00	NOTE 1
YJ6	289TE	3522.00	NOTE 1
YJ7	289TE	6921.85	NOTE 2
YJ8	--	--	--
YJ9	289TE	9351.73	NOTE 2
YJ10	289TD	4139.00	NOTE 1
YJ11	289TD	2971.00	NOTE 1
YJ12	289TD	1420.00	NOTE 1
YJ13	289TD	144.65	NOTE 3
YJ14	289TD	1357.00	NOTE 1
YJ15	289TD	3105.00	NOTE 2
YJ16	289TD	5091.46	NOTE 2
YJ17	289TD	164.00	NOTE 3
YJ18	216ZP1A	30.00	NOTE 2
YJ19	216ZP1A	285.00	NOTE 2
YJ20	216ZP1A	678.00	NOTE 2
YJ21	216ZP1A	884.00	NOTE 2
YJ22	216ZP1A	1186.00	NOTE 2

NOTES:

1. PIPELINE FOOTAGE SHOWN IS MEASURED LENGTH INSTALLED AS PHASE I.
2. PIPELINE FOOTAGE SHOWN IS ESTIMATED AS TO BE INSTALLED UNDER PHASE II.
3. YJ17 TO BE USED IN LIEU OF YJ13.
4. DRILLED – NOT IN USE.
5. NOT USED.
6. UN-USED HDPE PIPING BETWEEN YJ10 AND YJ23 BLIND FLANGED.
7. PIPELINE FOOTAGE SHOWN INCLUDES 20% EXTRA FOR SNAKING.

BLDG. NO.
289T
289TA
289TB
289TC
289TD
289TE
216ZP1A

INDEX NO.
0110

THIS SPACE RESERVED FOR BUILDING AND INDEX NUMBERS

DWG NO	TITLE	REF NUMBER	TITLE
H-1-91103	ROAD CROSSING DETAILS	H-2-833526	INDEX OF DRAWINGS
		REFERENCES	
DRAWING TRACEABILITY LIST		NEXT USED ON	

NO	DESCRIPTION	DATE	CHKD
9	REVISED PER ECR-14-000513	DCB 5/12/14	

REVISIONS

NAME	DATE	COMPANY
J. WALKER		
R. TOWNSEND		
E. ELLIS		
R. SASSER		

DESIGN AUTHORITY R. HOLLENBECK

U.S. DEPARTMENT OF ENERGY
Richland Operations Office

CIVIL
200W PUMP & TREAT
ROAD CROSSING PIPING PLAN

SIZE D1 | LOG NO SEE LIST | SHEET NO SEE LIST | DWG NO H-2-833610 | REV 9
SCALE 1"=600' | REF ECR-14-000005 | SHEET 1 OF 11

XXXX PLOTID XXXX

ECR-14-000762 Page 67
"WAS CONDITION" (PER ECR-14-000513)

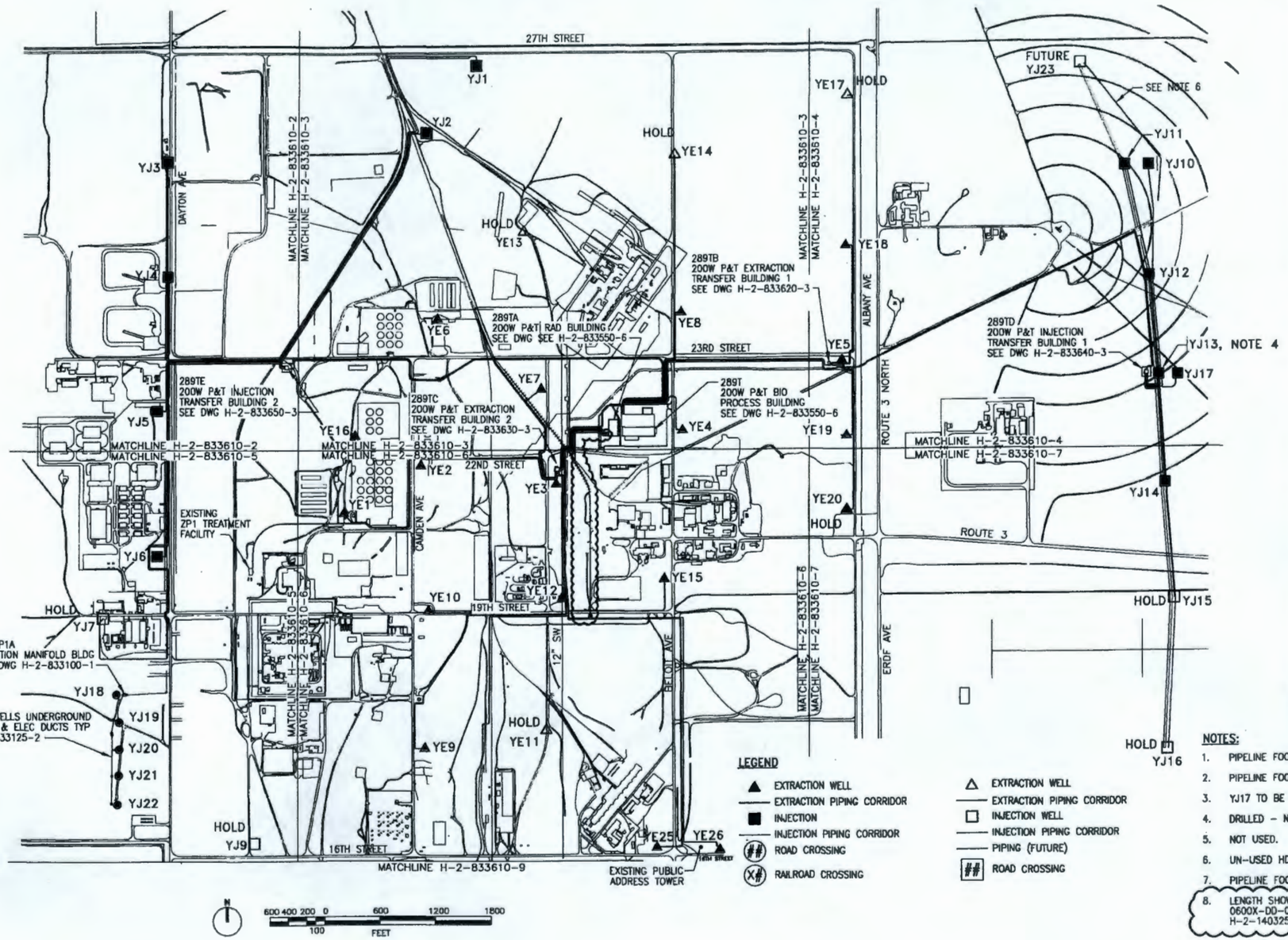

EXTRACTION WELLS			
FROM	TO	LENGTH (FT)	NOTE
YE1	289TC	3135.00	NOTE 1
YE2	289TC	1650.00	NOTE 1
YE3	289TC	88.00	NOTE 1
YE4	289T	1392.00	NOTE 1
YE5	289TB	213.00	NOTE 1
YE6	289TC	1356.00	NOTE 1
YE7	289TC	2724.00	NOTE 1
YE8	289T	1578.00	NOTE 1
YE9	289TC	4307.00	NOTE 1
YE10	289TC	3235.00	NOTE 2
YE11	289TC	3690.62	NOTE 2
YE12	289TC	1192.00	NOTE 1
YE13	289TC	4812.23	NOTE 2
YE14	289T	4056.37	NOTE 2
YE15	289TC	1676.00	NOTE 1
YE16	289TC	1097.00	NOTE 1
YE17	289TB	3887.74	NOTE 2
YE18	289TB	1627.00	NOTE 1
YE19	289TB	1187.00	NOTE 1
YE20	289TB	2269.00	NOTE 2
YE21	289TF	2100.00	–
YE22	289TF	1415.00	–
YE23	289TF	1400.00	–
YE25	289TA	7710.00	NOTE 7
YE26	289TA	7935.00	NOTE 7

EXTRACTION TRANSFER LINES			
FROM	TO	LENGTH (FT)	NOTE
289TB (2)	289T	2341.00 (EA)	NOTE 1
289TC (2)	289T	1808.35 (EA)	–
289TC (2)	289TA	1260.64 (EA)	–
289TF (1)	289TA	10948.00	–

INJECTION WELLS			
TO	FROM	LENGTH (FT)	NOTE
YJ1	289TE	5989.00	NOTE 1
YJ2	289TE	3290.00	NOTE 1
YJ3	289TE	4385.00	NOTE 1
YJ4	289TE	2762.00	NOTE 1
YJ5	289TE	2042.00	NOTE 1
YJ6	289TE	3522.00	NOTE 1
YJ7	289TE	6921.85	NOTE 2
YJ8	---	---	---
YJ9	289TE	9351.73	NOTE 2
YJ10	289TD	4139.00	NOTE 1
YJ11	289TD	2971.00	NOTE 1
YJ12	289TD	1420.00	NOTE 1
YJ13	289TD	144.65	NOTE 3
YJ14	289TD	1357.00	NOTE 1
YJ15	289TD	3105.00	NOTE 2
YJ16	289TD	5091.46	NOTE 2
YJ17	289TD	164.00	NOTE 3
YJ18	216ZP1A	30.00	NOTE 2
YJ19	216ZP1A	285.00	NOTE 2
YJ20	216ZP1A	678.00	NOTE 2
YJ21	216ZP1A	884.00	NOTE 2
YJ22	216ZP1A	1186.00	NOTE 2

ERDF LEACHATE TRANSFER LINE			
TO	FROM	LENGTH	NOTE
289TA	661BC	2600.00	NOTE 7

NOTES:

1. PIPELINE FOOTAGE SHOWN IS MEASURED LENGTH INSTALLED AS PHASE I.
2. PIPELINE FOOTAGE SHOWN IS ESTIMATED AS TO BE INSTALLED UNDER PHASE II.
3. YJ17 TO BE USED IN LIEU OF YJ13.
4. DRILLED – NOT IN USE.
5. NOT USED.
6. UN-USED HDPE PIPING BETWEEN YJ10 AND YJ23 BLIND FLANGED.
7. PIPELINE FOOTAGE SHOWN INCLUDES 20% EXTRA FOR SNAKING.
8. LENGTH SHOWN IS FOR NEW PIPE ONLY. FOR EXISTING PIPING SEE 0600X-DD-00107 THROUGH 00110, H-2-827212, H-2-140324 AND H-2-140325.

BLDG. NO.
289T
289TA
289TB
289TC
289TD
289TE
~~216ZP1A~~
661BC

INDEX NO.
0110

THIS SPACE RESERVED FOR BUILDING AND WELL NUMBERS

DWG NO.	TITLE	REF NUMBER	TITLE
		H-2-833526	INDEX OF DRAWINGS
H-1-91103	ROAD CROSSING DETAILS		

DRAWING TRACEABILITY LIST — REFERENCES — NEXT USED ON

REV	DATE	DESCRIPTION	BY	CHKD	APPD
9		REVISED PER ECN-14-000513	DCB		

REVISIONS

NAME	DATE
DRAWN BY J. WALKER	4/17/01
DESIGN BY R. TOWNSEND	4/17/01
ENGR BY D. ELLIS	4/17/01
PROJ ENGR BY P. SASSER	4/17/01
DESIGN SUPERVISOR R. HOLLENBECK	4/17/01

U.S. DEPARTMENT OF ENERGY
Richland Operations Office

TITLE: CIVIL
200W PUMP & TREAT
ROAD CROSSING PIPING PLAN

SIZE D | FILE NO. SEE LIST | DRAWN BY SEE LIST | DWG NO. H-2-833610 | REV 9
SCALE 1"=600' | ECN ECR-14-000005 | SHEET 1 OF 11

XXXX PLOTTED XXXX

ECR-14-000762 Page 68

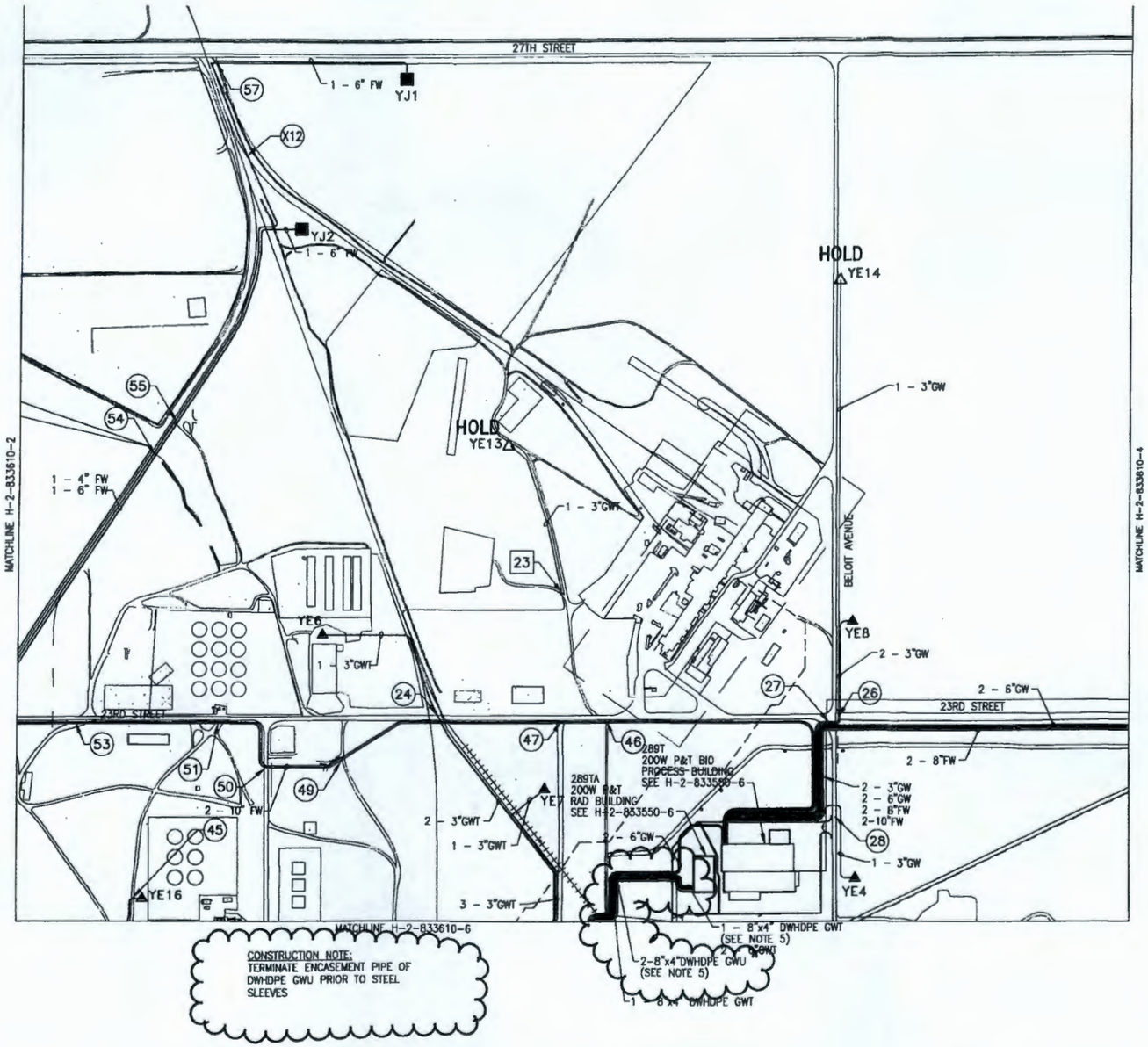

CONSTRUCTION NOTE:
TERMINATE ENCASEMENT PIPE OF DWHDPE GWU PRIOR TO STEEL SLEEVES

N

300 200 100 0 300 600 900
FEET

SLEEVE DATA ROAD CROSSINGS

ROAD CROSSING NUMBER	TOTAL NUMBER OF SLEEVES			NUMBER OF SLEEVES ELECTRICAL	ROAD TYPE	CASE
	8" SLEEVES	10" SLEEVES	14" SLEEVES	8" SLEEVES		
23	2 (1 SPARE)	–	–	1	G	6
24	4 (2 SPARE)	–	–	1	P	6
25	NOT USED					
26	5 (2 SPARE)	–	–	1	G	6
27	5 (2 SPARE)	–	4 (2 SPARE)	1	P	12
28	5 (2 SPARE)	–	–	1	P	6
45	5 (2 SPARE)	–	–	1	G	5
46	–	–	3 (1 SPARE)	1	G	11
47	–	–	3 (1 SPARE)	1	G	12
48	NOT USED					
49	–	–	3 (1 SPARE)	1	G	11
50	–	–	3 (1 SPARE)	1	P	12
51	–	–	3 (1 SPARE)	1	G	11
52	NOT USED					
53	–	–	3 (1 SPARE)	1	G	11
54	3 (1 SPARE)	–	–	1	G	5
55	3 (1 SPARE)	–	–	1	G	5
56	NOT USED					
57	2 (1 SPARE)	–	–	1	G	5
58	NOT USED					

P = PAVED ROAD
G = GRAVEL ROAD

NOTES:
1. NUMBER OF SLEEVES SHOWN IN THE TABLE ABOVE INCLUDES THE NUMBER OF SPARES IDENTIFIED IN PARENTHESIS.
2. FOR ROAD CROSSING DETAILS SEE H-1-91103.
3. NO HEAVY VEHICLE TRAFFIC, I.E. EXCAVATION EQUIPMENT, CONCRETE TRUCKS, ETC. OR VIBRATORY ROLLERS, MECHANICAL HAND HELD COMPACTORS ARE ALLOWED TO OPERATE WITHIN 5 FT OF POSTED BURIED EXPORT WATER LINE.
4. ~~PIPE TO BE FIELD ROUTED PER ENGINEERING DIRECTION~~
5. INSTALL VENT ON DWHDPE GWT AND GWU LINES AT HIGH POINT UPSTREAM OF ENTRY INTO DUCT BANK. USE DETAIL 4027-845 AND APPROVED TERMINATION FITTING. LEAK DETECTION HOLES IN OUTER WALL OF DOUBLE-WALL PIPE TO BE LOCATED WHERE SPECIFIED BY CHPRC ENGINEERING AND OPERATIONS.

KEY MAP

2	3	4
5	6	7
	9	

LEGEND

PHASE I WELLS
- ▲ EXTRACTION WELL
- EXTRACTION PIPING CORRIDOR
- ■ INJECTION
- INJECTION PIPING CORRIDOR
- (##) ROAD CROSSING
- (X#) RAILROAD CROSSING

PHASE II WELLS
- △ EXTRACTION WELL
- EXTRACTION PIPING CORRIDOR
- □ INJECTION WELL
- INJECTION PIPING CORRIDOR
- PIPING (FUTURE)
- [##] ROAD CROSSING

DWG NO	TITLE	REF NUMBER	TITLE
H-1-91103	ROAD CROSSING DETAILS	H-2-833526	INDEX OF DRAWINGS
DRAWING TRACEABILITY LIST		NEXT USED ON	REFERENCES

REV	DATE	DESCRIPTION	DRAWN	CHECKED
7		REVISED ECR-14-000513	DCB	11/04

REVISIONS

NAME
J. WALKER
R. TOWNSEND
J. ELLIS
F. SASSEN
R. HOOLENBEEK

U.S. DEPARTMENT OF ENERGY
Richland Operations Office

200 WEST PUMP & TREAT
ROAD CROSSINGS
AREA 3

D | 289T 289TA | D110 | H-2-833610 | 7
SCALE 1"=300' | SHEET 3 OF

XXXX PLOTTED XXXX

ECR-14-000762 Page 61
"WAS CONDITION" (PER ECR-14-000513)

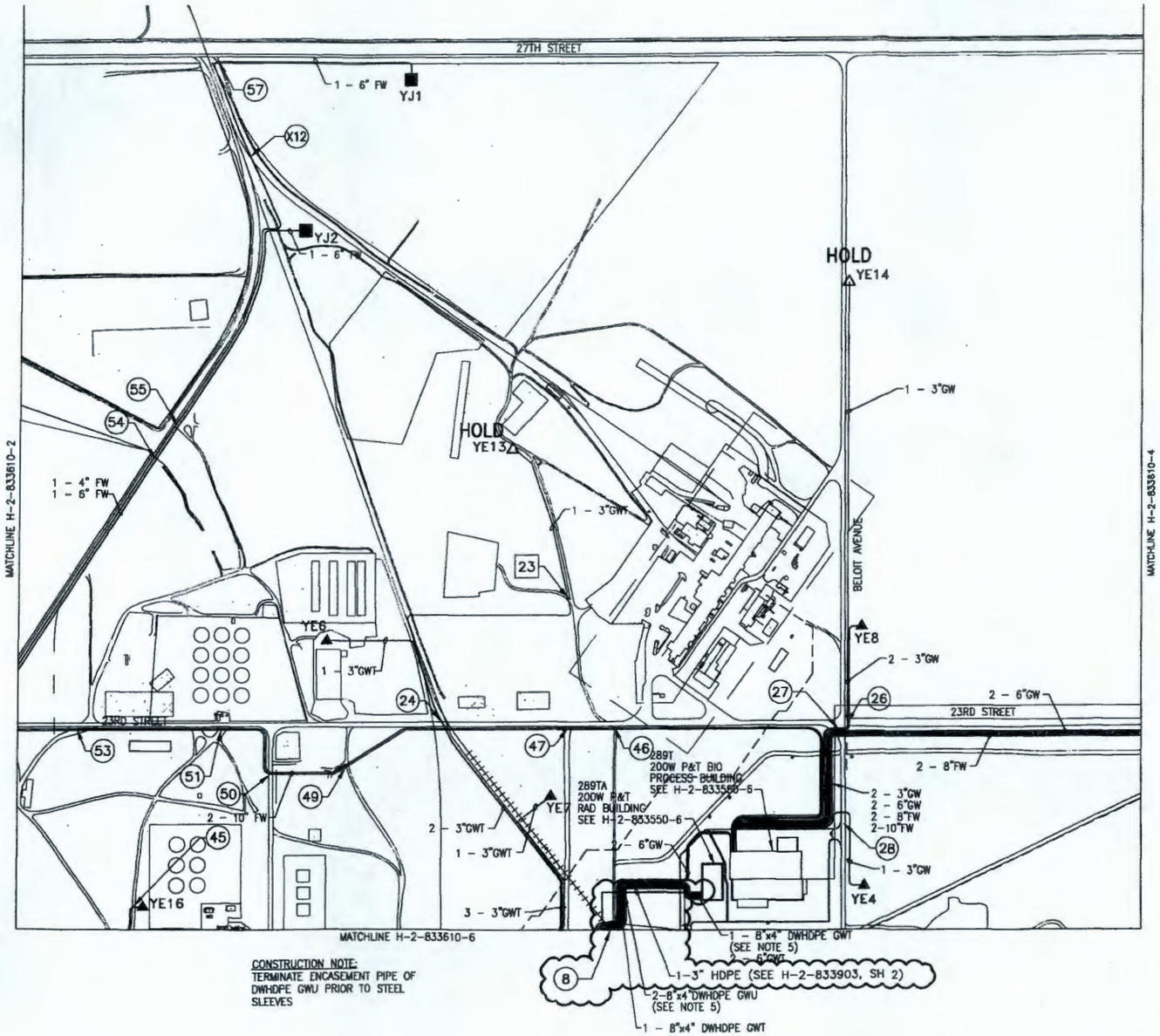

CONSTRUCTION NOTE:
TERMINATE ENCASEMENT PIPE OF DWHDPE GWU PRIOR TO STEEL SLEEVES

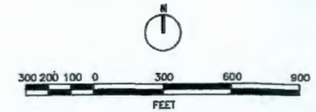

SLEEVE DATA ROAD CROSSINGS

ROAD CROSSING NUMBER	TOTAL NUMBER OF SLEEVES			NUMBER OF SLEEVES ELECTRICAL	ROAD TYPE	CASE
	8" SLEEVES	10" SLEEVES	14" SLEEVES	8" SLEEVES		
23	2 (1 SPARE)	–	–	1	G	6
24	4 (2 SPARE)	–	–	1	P	6
26	5 (2 SPARE)	–	–	1	G	6
27	5 (2 SPARE)	–	4 (2 SPARE)	1	P	12
28	5 (2 SPARE)	–	–	1	P	6
45	5 (2 SPARE)	–	–	1	G	5
46	–	–	3 (1 SPARE)	1	G	11
47	–	–	3 (1 SPARE)	1	G	12
49	–	–	3 (1 SPARE)	1	G	11
50	–	–	3 (1 SPARE)	1	P	12
51	–	–	3 (1 SPARE)	1	G	11
52	NOT USED					
53	–	–	3 (1 SPARE)	1	G	11
54	3 (1 SPARE)	–	–	1	G	5
55	3 (1 SPARE)	–	–	1	G	5
56	NOT USED					
57	2 (1 SPARE)	–	–	1	G	5
58	NOT USED					

P = PAVED ROAD
G = GRAVEL ROAD

NOTES:
1. NUMBER OF SLEEVES SHOWN IN THE TABLE ABOVE INCLUDES THE NUMBER OF SPARES IDENTIFIED IN PARENTHESIS.
2. FOR ROAD CROSSING DETAILS SEE H-1-91103.
3. NO HEAVY VEHICLE TRAFFIC, I.E. EXCAVATION EQUIPMENT, CONCRETE TRUCKS, ETC. OR VIBRATORY ROLLERS, MECHANICAL HAND HELD COMPACTORS ARE ALLOWED TO OPERATE WITHIN 5 FT OF POSTED BURIED EXPORT WATER LINE.
4. PIPE TO BE FIELD ROUTED PER ENGINEERING DIRECTION.
5. INSTALL VENT ON DWHDPE GWT AND GWU LINES AT HIGH POINT UPSTREAM OF ENTRY INTO DUCT BANK. USE DETAIL 4027-845 AND APPROVED TERMINATION FITTING. LEAK DETECTION HOLES IN OUTER WALL OF DOUBLE-WALL PIPE TO BE LOCATED WHERE SPECIFIED BY CHPRC ENGINEERING AND OPERATIONS.

KEY MAP

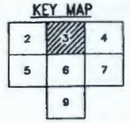

LEGEND

PHASE I WELLS
- EXTRACTION WELL
- EXTRACTION PIPING CORRIDOR
- INJECTION
- INJECTION PIPING CORRIDOR
- ## ROAD CROSSING
- X# RAILROAD CROSSING

PHASE II WELLS
- EXTRACTION WELL
- EXTRACTION PIPING CORRIDOR
- INJECTION WELL
- INJECTION PIPING CORRIDOR
- PIPING (FUTURE)
- ## ROAD CROSSING

DWG NO	TITLE	REFERENCES	
H-1-91103	ROAD CROSSING DETAILS	H-2-833526	INDEX OF DRAWINGS
DRAWING TRACEABILITY LIST		NEXT USED ON	TITLE

REV	DESCRIPTION	DATE
7	REVISED ECR-14-000813	9/11/14

REVISIONS

NAME	DATE
J WALKER	
R TOWNSEND	
FLUIS	
SASSER	
P HOLLENBECK	

U.S. DEPARTMENT OF ENERGY
Richland Operations Office

200 WEST PUMP & TREAT
ROAD CROSSINGS
AREA 3

D | 289T 289TA | 0110 | H-2-833610 | 7
SCALE 1"=300'

XXXX PLOTID XXXX

ECR-14-000762 Page 7

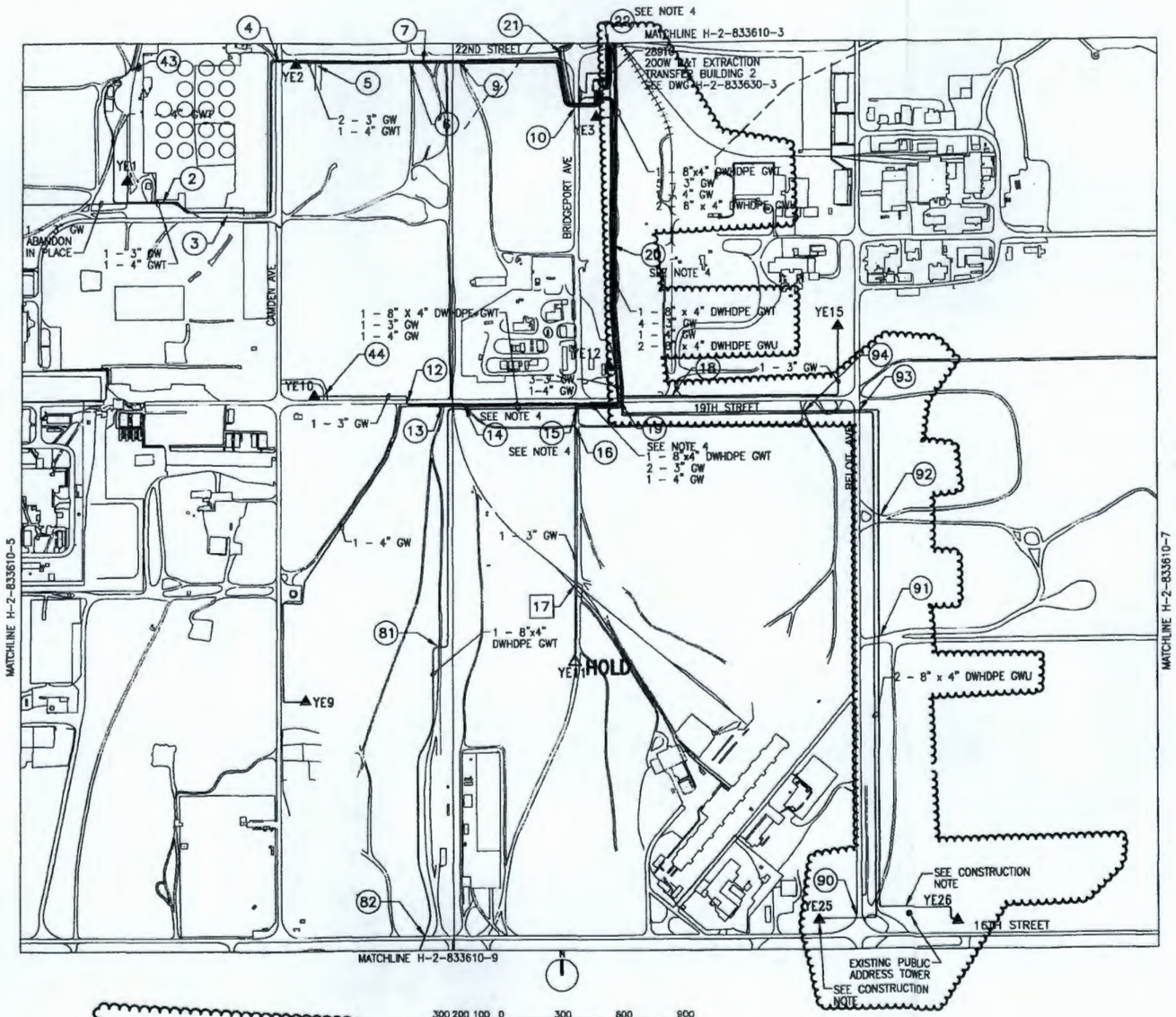

SLEEVE DATA ROAD CROSSINGS

ROAD CROSSING NUMBER	TOTAL NUMBER OF SLEEVES			NUMBER OF SLEEVES ELECTRICAL	ROAD TYPE	CASE
	8" SLEEVES	10" SLEEVES	14" SLEEVES	8" SLEEVES		
1	NOT USED	–	–	–	–	-
2	5 (3 SPARE)	–	–	1	G	5
3	5 (3 SPARE)			1	G	6
4	6 (4 SPARE)	–	–	1	P	6
5	6 (3 SPARE)	–	–	1	G	5
6	6 (2 SPARE)	–	–	1	G	5
7	6 (3 SPARE)	–	–	1	G	5
8	NOT USED					
9	6 (3 SPARE)	–	–	1	G	5
10	11 (5 SPARE)	–	–	1	G	6
11	NOT USED					
12	2 (1 SPARE)	–	–	1	P	6
13	4 (2 SPARE)	–	–	1	G	5
14	4 (2 SPARE)	–	–	1	G	11
15	5 (2 SPARE)	–	–	1	G	5
16	2 (1 SPARE)	–	–	1	G	5
17	2 (1 SPARE)	–	–	1	G	5
18	2 (1 SPARE)	–	–	1	G	5
19	8 (1 SPARE)	–	–	1	P	6
20	10	–	–	1	G	5
21	3 (1 SPARE)		–	1	G	6
22	3 (1 SPARE)	6	–	1	G	9
43	2 (1 SPARE)		–	1	G	5
44	2 (1 SPARE)	–	–	1	G	4
81	–	–	3 (2 SPARE)	1	G	5
82			3 (2 SPARE)	1	P	6
90	2 (1 SPARE)	4 (3 SPARE)	–	1	P	6
91	2 (1 SPARE)	7 (5 SPARE)	–	1	G	5
92	2 (1 SPARE)	7 (5 SPARE)	–	1	G	5
93	2 (1 SPARE)	7 (5 SPARE)	–	1	P	6
94	2 (1 SPARE)	7 (5 SPARE)	–	1	G	6

P = PAVED ROAD
G = GRAVEL ROAD

NOTES:

1. NUMBER OF SLEEVES SHOWN IN THE TABLE ABOVE INCLUDES THE NUMBER OF SPARES IDENTIFIED IN PARENTHESIS.
2. FOR ROAD CROSSING DETAILS SEE H-1-91103.
3. PIPE TO BE FIELD ROUTED PER ENGINEERING DIRECTION.
4. TRANSITION DOUBLE WALL PIPE TO SINGLE WALL THROUGH ROAD CROSSING. INSTALL VENT AT HIGH POINT OF DWHDPE GWT AND GWU LINES UPSTREAM OF CROSSING. USE DETAL 4027-845 AND APPROVED TERMINATION FITTING. LEAK DETECTION HOLES IN OUTER WALL OF DOUBLE-WALL PIPE TO BE LOCATED WHERE SPECIFIED BY CHPRC ENGINEERING AND OPERATIONS.

CONSTRUCTION NOTE: (DO NOT INCORPORATE)

FIVE (5) NEW ROAD CROSSINGS (90,91,92,93 AND 94) ARE REQUIRED TO SUPPORT THE INSTALLATION OF WELLS YE25 AND YE26; USE 2 SPARE SLEEVES FROM EXISTING ROAD CROSSING #19, AND 2 SPARE SLEEVES FROM EXISITING ROAD CROSSING #22, AND 2 SPARE SLEEVES FROM EXISTING ROAD CROSSING #20.

LEGEND

PHASE I WELLS
- EXTRACTION WELL
- EXTRACTION PIPING CORRIDOR
- INJECTION
- INJECTION PIPING CORRIDOR
- ROAD CROSSING
- RAILROAD CROSSING

PHASE II WELLS
- EXTRACTION WELL
- EXTRACTION PIPING CORRIDOR
- INJECTION WELL
- INJECTION PIPING CORRIDOR
- PIPING (FUTURE)
- ROAD CROSSING

KEY MAP

2	3	4
5	6	7
	9	

EDITORIAL MODIFICATION

DWG NO	TITLE	REFERENCES	
H-1-91103	ROAD CROSSING DETAILS	H-2-833526	INDEX OF DRAWINGS
		REF NUMBER	TITLE

DRAWING TRACEABILITY LIST — NEXT USED ON

REV NO	DESCRIPTION	DRN	CHK	DATE
8	REVISED PER ECR-14-000513	DCB	BLS	5/12/14
7	REVISED PER DCN-200W-329	BLR	BLS FOR RGH	4/16/12 6/14/12

REVISIONS

	NAME	DATE
DRAWN	J WALKER	10/17/96
DESIGNED	R TOWNSEND	10/28/96
CHECKED	P ELLIS	10/31/96
ENGINEER	B SASSER	12/17/96
PROJECT ENGINEER		
DESIGN AUTHORITY	R BOLLENBECK	12/30/96

U.S. DEPARTMENT OF ENERGY
Richland Operations Office

CIVIL
200W PUMP & TREAT
ROAD CROSSING AREA 6

SCALE 1"=300' DCN-200W-005 SHEET 6 OF

H-2-833610 8

XXXX PLOTID XXXX

ECR-14-000762 Page 71
"WAS CONDITION" (PER ECR-14-000513)

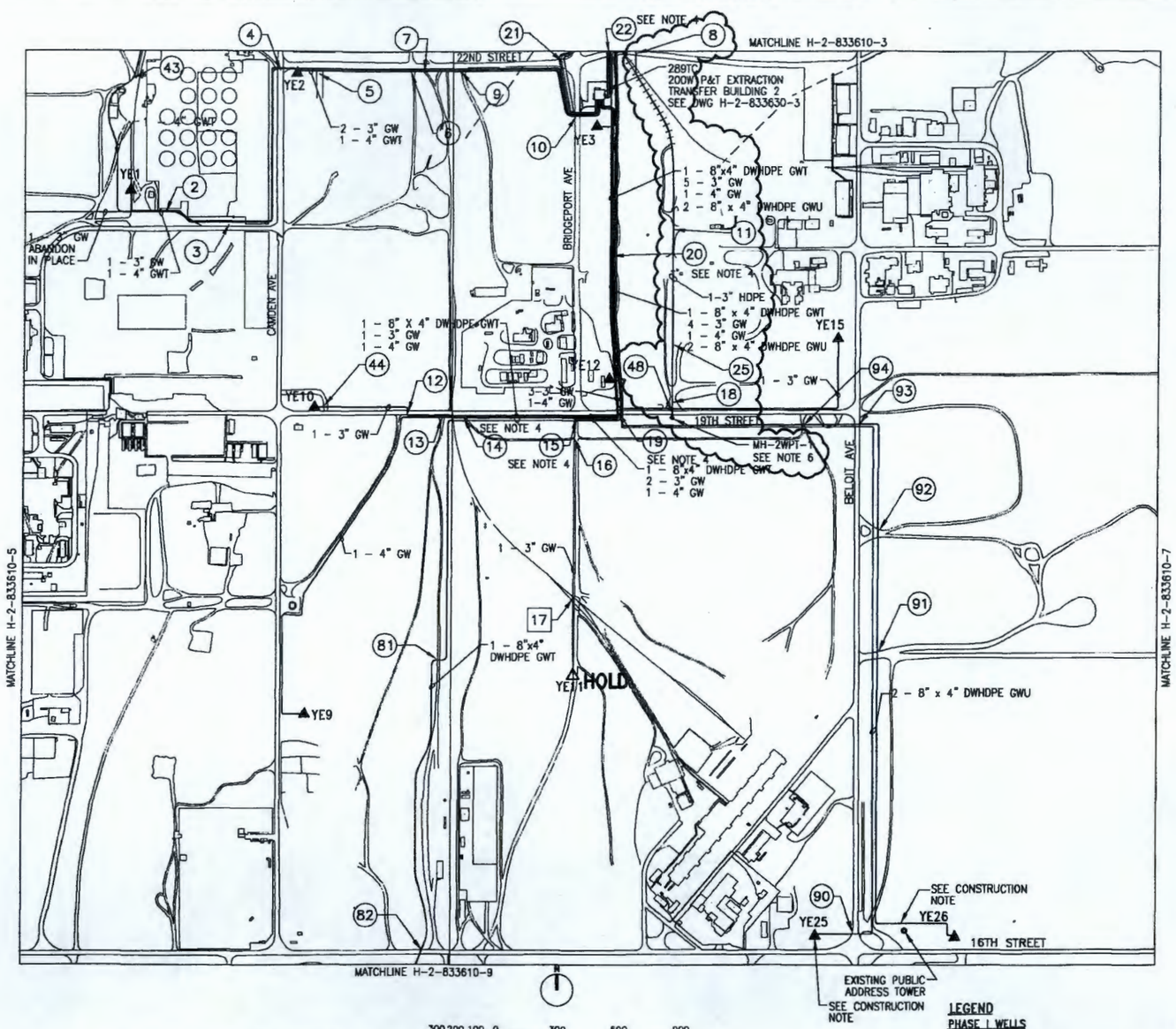

CONSTRUCTION NOTE: (DO NOT INCORPORATE)

FIVE (5) NEW ROAD CROSSINGS (90,91,92,93 AND 94) ARE REQUIRED TO SUPPORT THE INSTALLATION OF WELLS YE25 AND YE26; USE 2 SPARE SLEEVES FROM EXISTING ROAD CROSSING #19, AND 2 SPARE SLEEVES FROM EXISITING ROAD CROSSING #22, AND 2 SPARE SLEEVES FROM EXISTING ROAD CROSSING #20.

SLEEVE DATA ROAD CROSSINGS

ROAD CROSSING NUMBER	TOTAL NUMBER OF SLEEVES			NUMBER OF SLEEVES ELECTRICAL	ROAD TYPE	CASE	
	8" SLEEVES	10" SLEEVES	14" SLEEVES	8" SLEEVES			
1	NOT USED	–	–	–	–	-	
2	5 (3 SPARE)	–	–	1	G	5	
3	5 (3 SPARE)			1	G	6	
4	6 (4 SPARE)	–	–	1	P	6	
5	6 (3 SPARE)	–	–	1	G	5	
6	6 (2 SPARE)	–	–	1	G	5	
7	6 (3 SPARE)	–	–	1	G	5	
8	1	–	–	–	G	6	
9	6 (3 SPARE)	–	–		G	5	
10	11 (5 SPARE)	–	–	1	G	6	
11	1	–	–	–	G	–	SEE NOTE 7
12	2 (1 SPARE)	–	–	1	P	6	
13	4 (2 SPARE)	–	–	1	G	5	
14	4 (2 SPARE)	–	–	1	G	11	
15	5 (2 SPARE)	–	–	1	G	5	
16	2 (1 SPARE)	–	–	1	G	5	
17	2 (1 SPARE)	–	–	1	G	5	
18	2 (1 SPARE)	–	–	1	G	5	
19	8 (1 SPARE)	–	–	1	P	6	
20	10	–	–	1	G	5	
21	5 (2 SPARE)	–	–	1	G	6	
22	3 (1 SPARE)	6	–	1	G	9	
25	1	–	–	–	G	–	SEE NOTE 7
43	2 (1 SPARE)	–	–	1	G	5	
44	2 (1 SPARE)	–	–	1	G	4	
48	1	–	–	–	P&G	–	SEE NOTE 7
81	–	–	3 (2 SPARE)	1	G	5	
82	–	–	3 (2 SPARE)	1	P	6	
90	2 (1 SPARE)	4 (3 SPARE)	–	1	P	6	
91	2 (1 SPARE)	7 (5 SPARE)	–	1	G	5	
92	2 (1 SPARE)	7 (5 SPARE)	–	1	G	5	
93	2 (1 SPARE)	7 (5 SPARE)	–	1	P	6	
94	2 (1 SPARE)	7 (5 SPARE)	–	1	G	6	
95	1	–	–	1	G	–	SEE NOTE 8
96	1	–	–	1	G	–	SEE NOTE 8

P = PAVED ROAD G = GRAVEL ROAD

NOTES:

1. NUMBER OF SLEEVES SHOWN IN THE TABLE ABOVE INCLUDES THE NUMBER OF SPARES IDENTIFIED IN PARENTHESIS.
2. FOR ROAD CROSSING DETAILS SEE H-1-91103.
3. PIPE TO BE FIELD ROUTED PER ENGINEERING DIRECTION.
4. TRANSITION DOUBLE WALL PIPE TO SINGLE WALL THROUGH ROAD CROSSING. INSTALL VENT AT HIGH POINT OF DWHDPE GWT AND GWU LINES UPSTREAM OF CROSSING. USE DETAIL 4027-845 AND APPROVED TERMINATION FITTING. LEAK DETECTION HOLES IN OUTER WALL OF DOUBLE-WALL PIPE TO BE LOCATED WHERE SPECIFIED BY CHPRC ENGINEERING AND OPERATIONS.
5. SEE DRAWING 0600X-DD-00107 THROUGH 00110 FOR UNDERGROUND PIPING.
6. SEE DRAWING H-2-833903 SH 3.
7. SEE DRAWINGS H-2-833903, SHEETS 1 THROUGH 7, FOR DETAILS ON ROAD CROSSINGS.
8. SEE DRAWINGS H-2-140343 SH 1 AND H-2-140344 SH 1 FOR DETAILS ON BURIED CONDUIT RUNS.

LEGEND

PHASE I WELLS
- EXTRACTION WELL
- EXTRACTION PIPING CORRIDOR
- INJECTION
- INJECTION PIPING CORRIDOR
- ## ROAD CROSSING
- X# RAILROAD CROSSING

PHASE II WELLS
- EXTRACTION WELL
- EXTRACTION PIPING CORRIDOR
- INJECTION WELL
- INJECTION PIPING CORRIDOR
- PIPING (FUTURE)
- ## ROAD CROSSING

KEY MAP

2	3	4
5	6	7
	9	

DWG NO	TITLE	REF NUMBER	TITLE
		H-2-833526	INDEX OF DRAWINGS
H-1-91103	ROAD CROSSING DETAILS		
DRAWING TRACEABILITY LIST		NEXT USED ON	REFERENCES

REV	DESCRIPTION	DWN	CHK	DATE
8	REVISED PER ECR-14-000513	DCB	SLF	5/22/14
7	REVISED PER DCN-200W-328	SLF	SLS	9/16/12 6/14/12 SLS/BLR FOR RCN

REVISIONS

NAME	DATE
DRAWN J. WACKER	
DESIGN R. TOWNSEND	
CHK D. ELLIS	
APPR B. SASSEN	
DESIGN AUTHORITY R. HOLLENBECK	

U.S. DEPARTMENT OF ENERGY
Richland Operations Office

CIVIL
200W PUMP & TREAT
ROAD CROSSING AREA 6

SIZE D | CODE IDENT 28BTC | PROJ NO 0110 | DWG NO H-2-833610 | REV 8
SCALE 1/2=300' | REF DCN-200W-005 | SHEET 6 OF

XXXX PLOTTED XXXX

ECR-14-000762 Page 7a

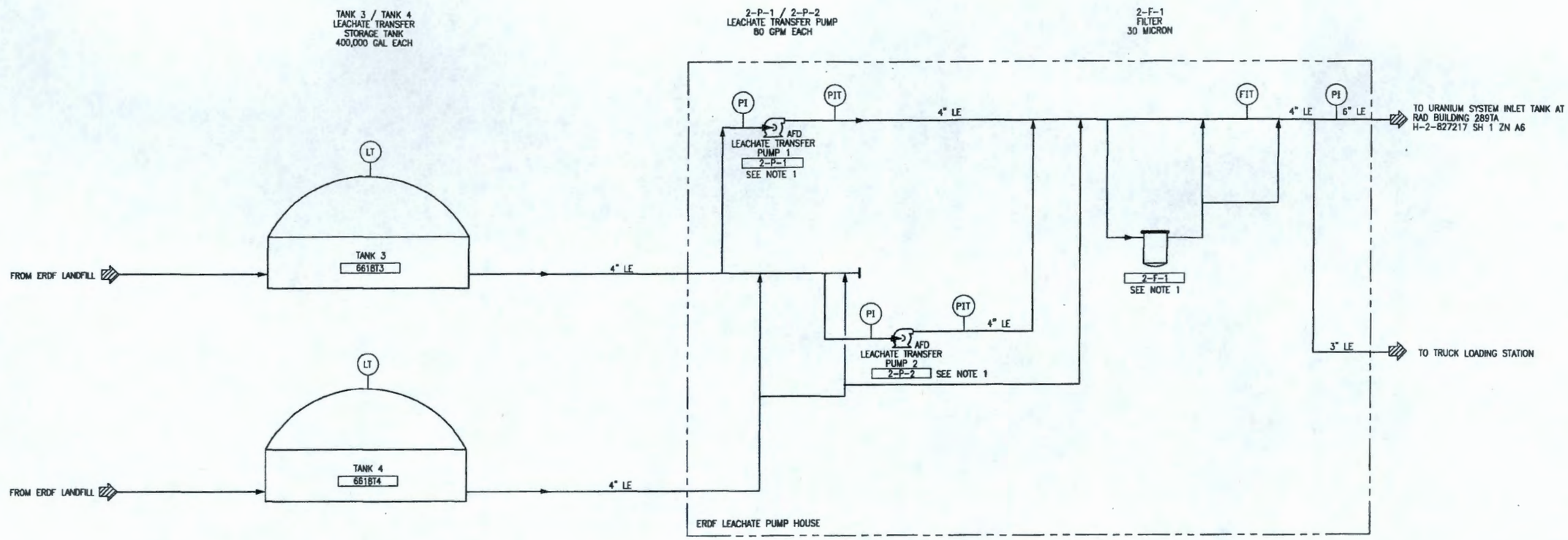

NOTE:

1. EQUIPMENT LOCATED AT ERDF LEACHATE PUMP HOUSE.

DRAWING TRACEABILITY LIST		REFERENCES		REVISIONS			
DWG NO	TITLE	REF NUMBER	TITLE	REV NO	DESCRIPTION	REV BY DATE	CHECK DESIGN
				0	INITIAL RELEASE PER ECR-14-000762		
NEXT USED ON							

NAME	DATE	COMPANY
DRAWN BY JJ AMMERMAN	11/2014	CHPRC
DESIGN BY		
ENG		
PROJ ENG		
CHECKED		
DESIGN AUTHORITY		

U.S. DEPARTMENT OF ENERGY
Richland Operations Office

TITLE
PFDS
ERDF LEACHATE
TRANSFER SYSTEM

SIZE	BLDG NO	INDEX NO	DWG NO	REV
D	661BC	7000	H-2-833900	0

SCALE NONE ECR-14-000762 SHEET 1 OF

XXXX PLOTID XXXX

ECR-14-000762 Page 73

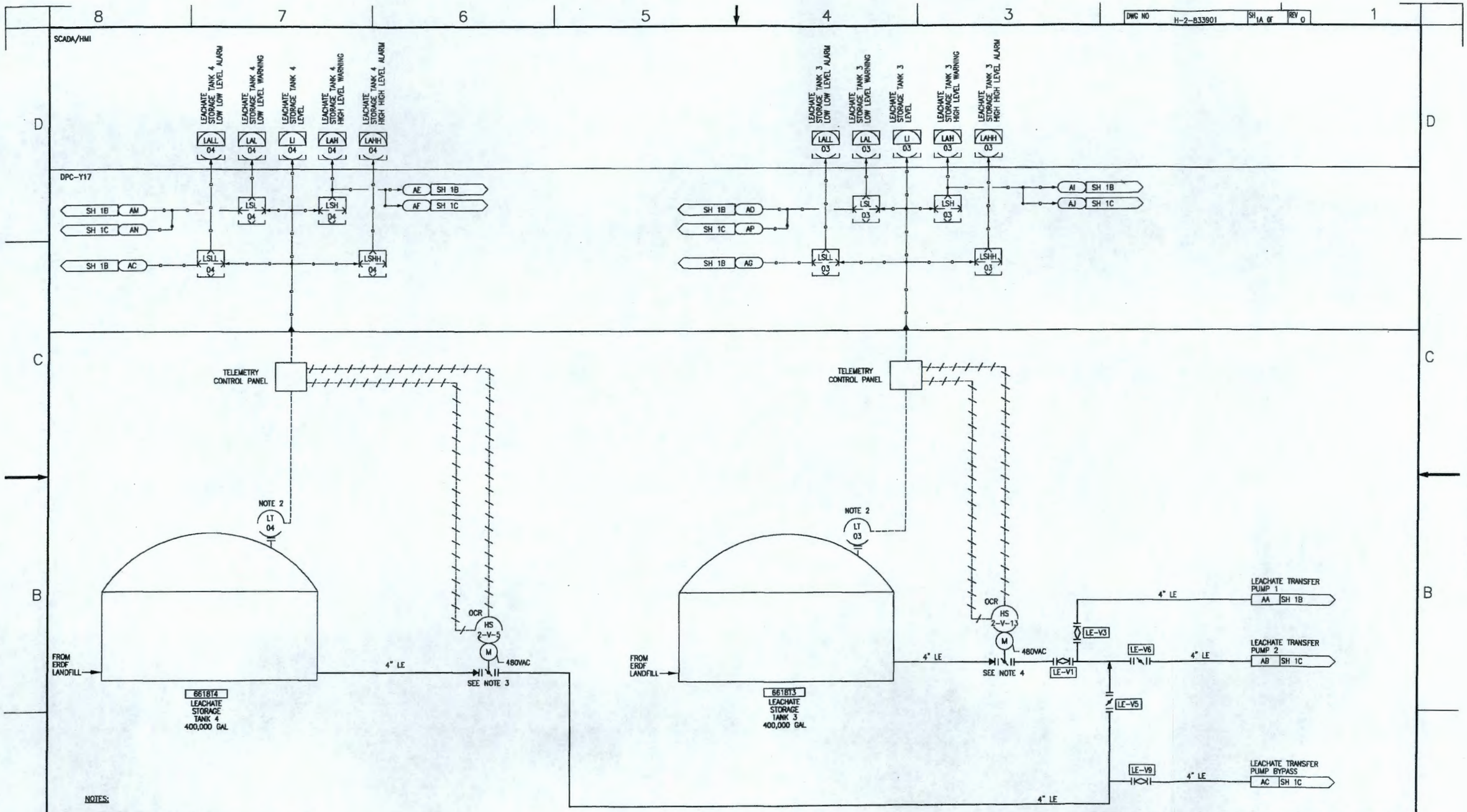

NOTES:

1. WHEN A HIGH LEVEL WARNING OCCURS, THE ERDF LEACHATE TRANSFER BUILDING PLC WILL START THE LEACHATE PUMP NO.1. THE PUMP WILL CONTINUE RUNNING UNTIL EITHER LEACHATE TANK LOW LEVEL WARNING OCCURS.
2. SIGNAL COMES FROM STORAGE TANK TELEMETRY PANEL.
3. LOCATED IN MH-1B
4. LOCATED IN MH-22

DWG NO	TITLE
DRAWING TRACEABILITY LIST	

REF NUMBER	TITLE
NEXT USED ON	REFERENCES

REV	DESCRIPTION
0	INITIAL RELEASE PER ECR-14-000762

REVISIONS

NAME	DATE
J.J. AMMERMAN	11/20/14

U.S. DEPARTMENT OF ENERGY
Richland Operations Office

P&IDS
ERDF LEACHATE
PUMP HOUSE

SIZE	BLDG NO	INDEX NO	DWG NO	REV
D	661BC	7004	H-2-833901	0

SCALE NONE | ECR-14-000762 | SHEET 1A OF

XXXX PLOTID XXXX

ECR-14-000762 Page 74

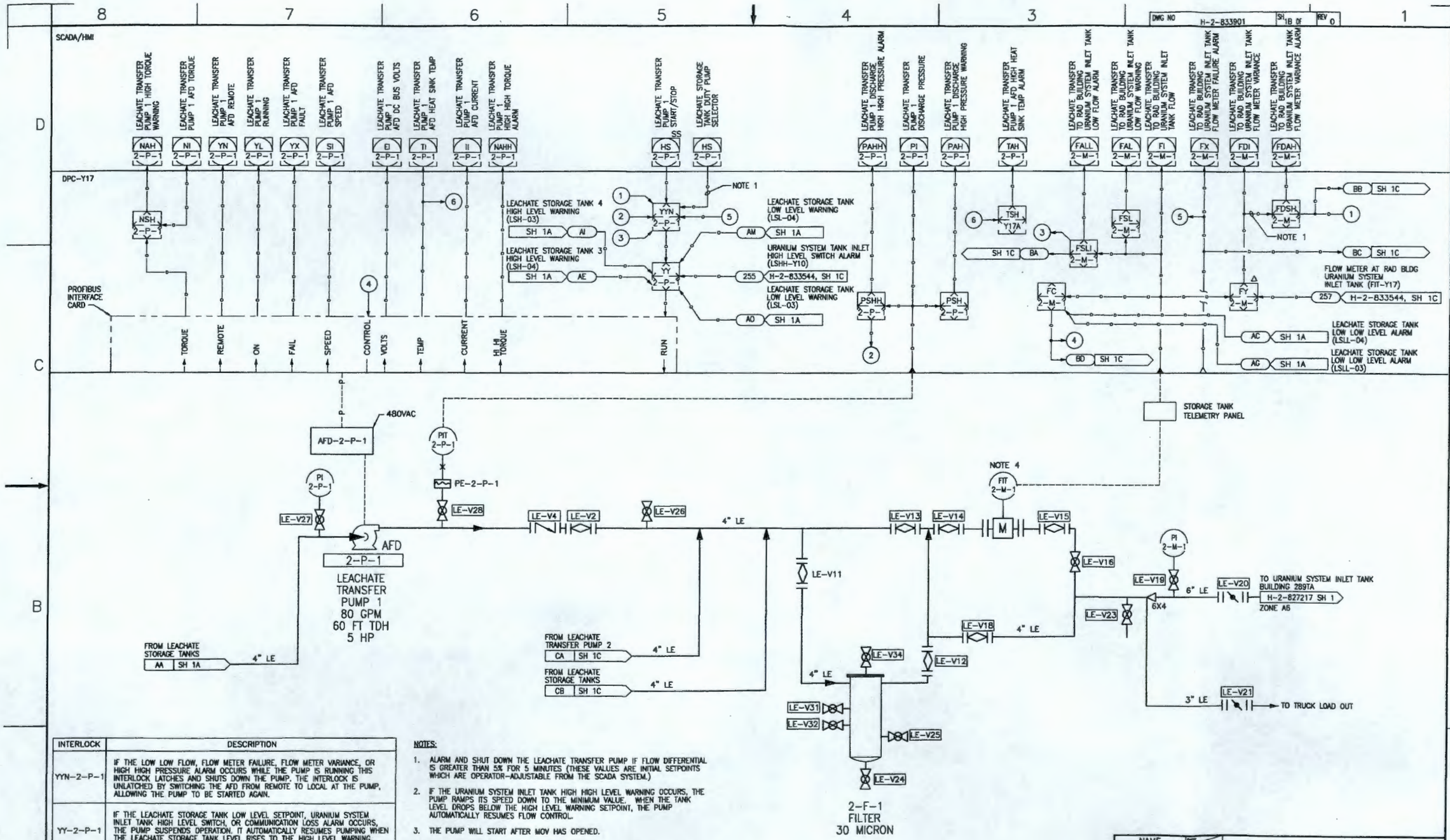

INTERLOCK	DESCRIPTION
YYN-2-P-1	IF THE LOW LOW FLOW, FLOW METER FAILURE, FLOW METER VARIANCE, OR HIGH HIGH PRESSURE ALARM OCCURS WHILE THE PUMP IS RUNNING THIS INTERLOCK LATCHES AND SHUTS DOWN THE PUMP. THE INTERLOCK IS UNLATCHED BY SWITCHING THE AFD FROM REMOTE TO LOCAL AT THE PUMP, ALLOWING THE PUMP TO BE STARTED AGAIN.
YY-2-P-1	IF THE LEACHATE STORAGE TANK LOW LEVEL SETPOINT, URANIUM SYSTEM INLET TANK HIGH LEVEL SWITCH, OR COMMUNICATION LOSS ALARM OCCURS, THE PUMP SUSPENDS OPERATION. IT AUTOMATICALLY RESUMES PUMPING WHEN THE LEACHATE STORAGE TANK LEVEL RISES TO THE HIGH LEVEL WARNING, THE URANIUM SYSTEM INLET TANK LEVEL DROPS BELOW THE HIGH LEVEL WARNING, AND COMMUNICATION IS RESTORED.

NOTES:

1. ALARM AND SHUT DOWN THE LEACHATE TRANSFER PUMP IF FLOW DIFFERENTIAL IS GREATER THAN 5% FOR 5 MINUTES (THESE VALUES ARE INITIAL SETPOINTS WHICH ARE OPERATOR-ADJUSTABLE FROM THE SCADA SYSTEM.)
2. IF THE URANIUM SYSTEM INLET TANK HIGH HIGH LEVEL WARNING OCCURS, THE PUMP RAMPS ITS SPEED DOWN TO THE MINIMUM VALUE. WHEN THE TANK LEVEL DROPS BELOW THE HIGH LEVEL WARNING SETPOINT, THE PUMP AUTOMATICALLY RESUMES FLOW CONTROL.
3. THE PUMP WILL START AFTER MOV HAS OPENED.
4. SIGNAL COMES FROM TELEMETRY PANEL.

DRAWING TRACEABILITY LIST

DWG NO	TITLE

REFERENCES

REF NUMBER	TITLE

NEXT USED ON

REVISIONS

REV NO	DESCRIPTION
0	INITIAL RELEASE PER ECR-14-000762

NAME: J.J. AMMERMAN

U.S. DEPARTMENT OF ENERGY
Richland Operations Office

TITLE: P&IDS ERDF LEACHATE PUMP HOUSE

SIZE D | BLDG NO 6618C | INDEX NO 7004 | DWG NO H-2-833901 | REV 0

SCALE NONE | ECR-14-000762 | SHEET 1B OF

XXXX PLOTID XXXX

ECR-14-000762 Page 75

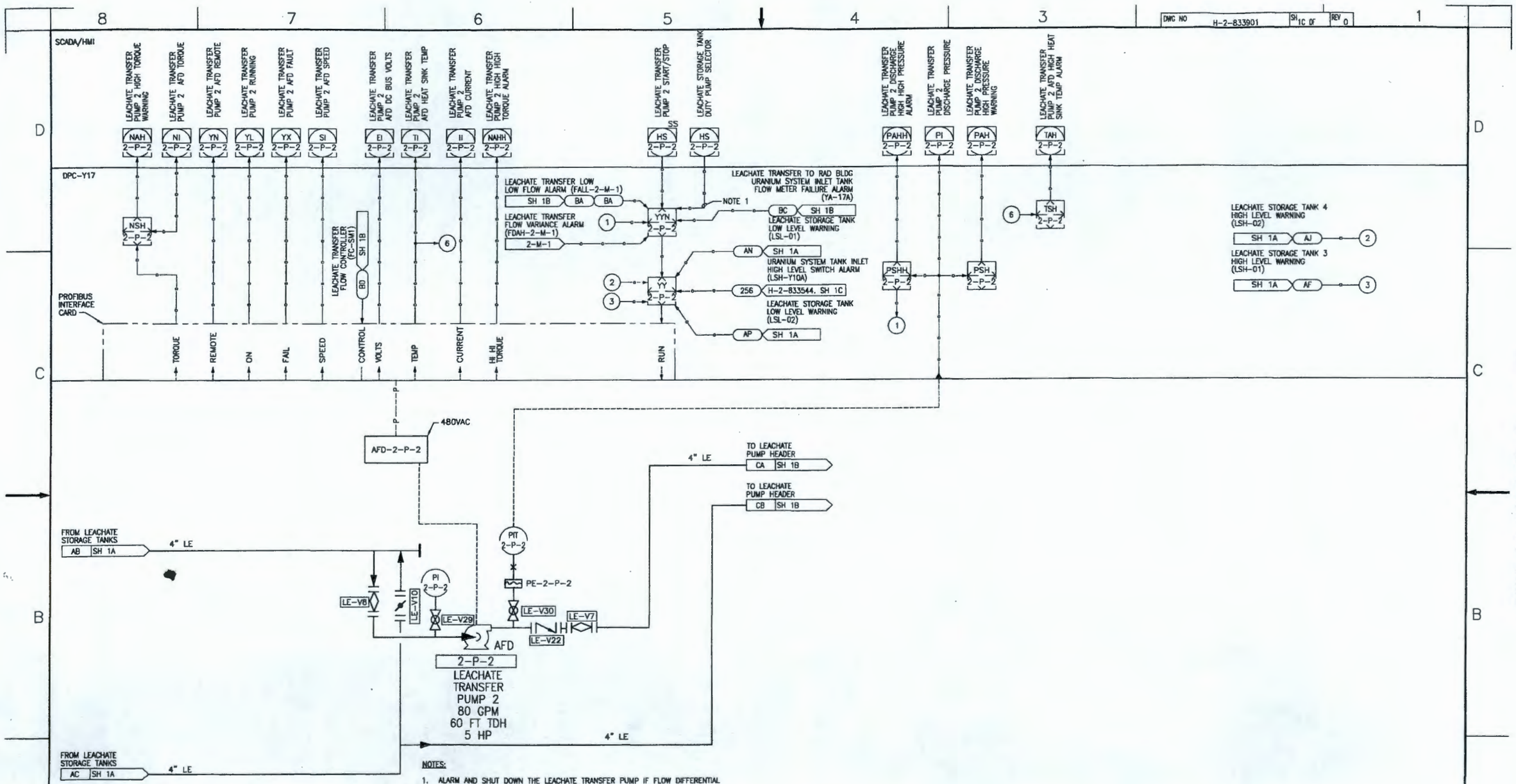

INTERLOCK	DESCRIPTION
YYN-2-P-2	IF THE LOW LOW FLOW, FLOW METER FAILURE, FLOW METER VARIANCE, OR HIGH HIGH PRESSURE ALARM OCCURS WHILE THE PUMP IS RUNNING THIS INTERLOCK LATCHES AND SHUTS DOWN THE PUMP. THE INTERLOCK IS UNLATCHED BY SWITCHING THE AFD FROM REMOTE TO LOCAL AT THE PUMP, ALLOWING THE PUMP TO BE STARTED AGAIN.
YY-2-P-2	IF THE LEACHATE STORAGE TANK LOW LEVEL SETPOINT, URANIUM SYSTEM INLET TANK HIGH LEVEL SWITCH, OR COMMUNICATION LOSS ALARM OCCURS, THE PUMP SUSPENDS OPERATION. IT AUTOMATICALLY RESUMES PUMPING WHEN THE LEACHATE STORAGE TANK LEVEL RISES TO THE HIGH LEVEL WARNING, THE URANIUM SYSTEM INLET TANK LEVEL DROPS BELOW THE HIGH LEVEL WARNING, AND COMMUNICATION IS RESTORED.

NOTES:

1. ALARM AND SHUT DOWN THE LEACHATE TRANSFER PUMP IF FLOW DIFFERENTIAL IS GREATER THAN 5% FOR 5 MINUTES (THESE VALUES ARE INITIAL SETPOINTS WHICH ARE OPERATOR-ADJUSTABLE FROM THE SCADA SYSTEM.)
2. IF THE URANIUM SYSTEM INLET TANK HIGH HIGH LEVEL WARNING OCCURS, THE PUMP RAMPS ITS SPEED DOWN TO THE MINIMUM VALUE. WHEN THE TANK LEVEL DROPS BELOW THE HIGH LEVEL WARNING SETPOINT, THE PUMP AUTOMATICALLY RESUMES FLOW CONTROL.
3. THE PUMP WILL START AFTER MOV HAS OPENED.
4. ISSUE START COMMAND TO MOTOR 70 SECONDS AFTER MOV CALL TO CLOSE. IF FIT 2-M-1 DOES NOT SEE FLOW 04 SECONDS AFTER START, PUMP IS ISSUED A STOP.

DRAWING TRACEABILITY LIST

DWG NO	TITLE	REF NUMBER	TITLE	NEXT USED ON
			REFERENCES	

REVISIONS

REV	DESCRIPTION
0	INITIAL RELEASE PER ECR-14-000762

NAME	DATE	COMPANY
DRAWN BY J.J. AMMERMAN	11/19/14	CHPRC
DESIGN BY		
ENG		
PROJ ENG		CHPRC
CHECKED		SH
DESIGN AUTHORITY		CHPRC

U.S. DEPARTMENT OF ENERGY
Richland Operations Office

TITLE: P&IDS ERDF LEACHATE PUMP HOUSE

SIZE D | BLDG NO 6618C | INDEX NO 7004 | DWG NO H-2-833901 | REV 0

SCALE NONE | REV ECR-14-000762 | SHEET 1C OF

XXXX PLOTID XXXX

ECR-14-000762 Page 74

NOTES:

1. WIRING SHOWN IS SCHEMATIC AND IN GENERAL DOES NOT INDICATE ROUTING, CONDUIT TYPE, OR CIRCUIT COMBINATION. INSTALLING CONTRACTOR IS RESPONSIBLE FOR ROUTING DESIGN, ADHERENCE TO MATERIAL TYPES AND WORK EXECUTION PER SPECIFICATIONS, AND COMBINING OF CIRCUITS FOLLOWING SPECIFICATION CRITERIA.
2. SEE DRAWING H-2-833533 SHEET 3 FOR CABLE DESIGNATIONS
3. CONTRACTOR TO INSTALL MOORE INDUSTRIES ECT-DIN SIGNAL SPLITTERS IN STORAGE TELEMETRY PANEL TO SPLIT THE FOLLOWING SIGNALS BETWEEN TELEMETRY PANEL & DPC-Y17.
   - LT-01
   - LT-02
   - FIT-2-M-1
4. SEE H-2-833543 SH 31 FOR ADDITIONAL INFORMATION ON SIGNALS BETWEEN DPC-Y17 AND TELEMETRY CONTROL PANEL.

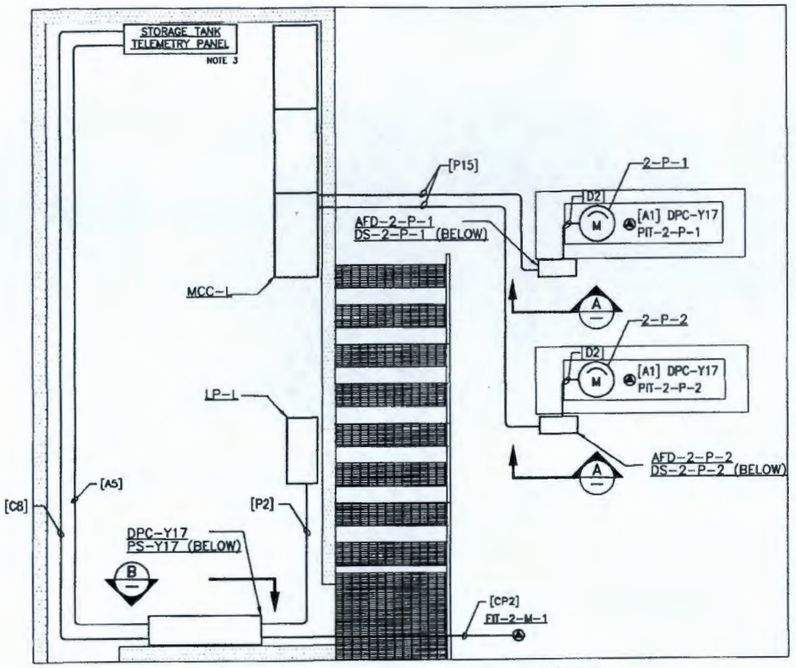

ERDF LEACHATE PUMP HOUSE
ELECTRICAL WIRING

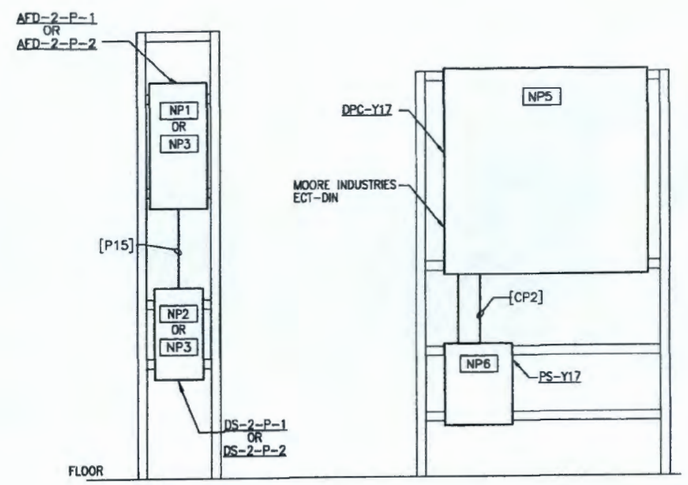

A ELEVATION
SCALE: NONE

B ELEVATION
SCALE: NONE

NAMEPLATE LEGENDS		
NP#	NAMEPLATE	TEXT SIZE
NP1	AFD-2-P-1 DRIVE FOR 2-P-1 FED FROM DS-2-P-1	3/16"
NP2	DS-2-9-1 DISCONNECT FOR AFD-2-P-1 FED FROM MCC-L SECTION 10A	3/16"
NP3	AFD-2-P-2 DRIVE FOR 2-P-2 FED FROM DS-2-P-2	3/16"
NP4	DS-2-P-2 DISCONNECT FOR AFD-2-P-2 FED FROM MCC-L SECTION 10B	3/16"
NP5	DPC-Y17 DISTRIBUTED PROCESS CONTROLLER FED FROM PS-Y17	3/16"
NP6	PS-Y17 POWER SUPPLY FOR DPC-Y17 FED FROM LP-L CKT 2	3/16"

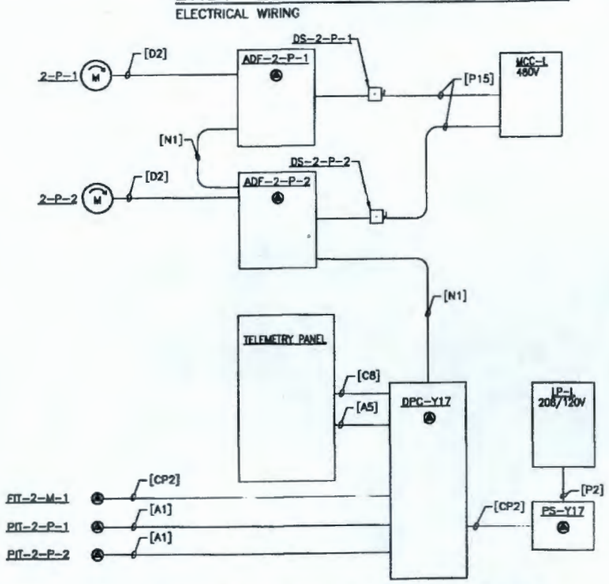

ERDF LEACHATE PUMP HOUSE
INSTRUMENTATION WIRING

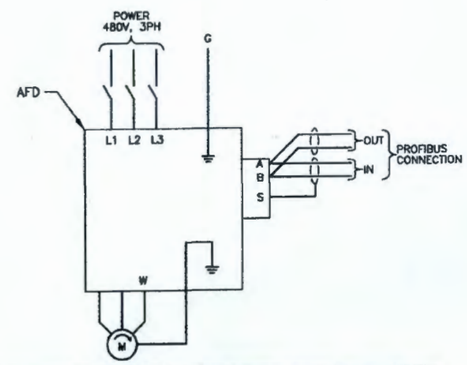

MOTOR	AFD	POWER	PROFIBUS IN	PROFIBUS OUT
2-P-1	AFD-2-P-1	MCC-L SECTION 10A	AFD-2-P-2	END OF LONE RESISTOR
2-P-2	AFD-2-P-2	MCC-L SECTION 10B	DPC-Y17	AFD-2-P-2

LEACHATE TRANSFER PUMPS
SCALE: NONE

DWG NO	TITLE
DRAWING TRACEABILITY LIST	

REF NUMBER	TITLE
REFERENCES	
NEXT USED ON	

REV	DESCRIPTION	ENGR	COMPANY
0	INITIAL RELEASE PER ECR-14-000762		

REVISIONS

NAME	DATE	COMPANY
DRAWN BY JJ AMMERMAN	12/2014	ENVIRO
ENG		
CHECKER		
DESIGN AUTHORITY		

U.S. DEPARTMENT OF ENERGY
Richland Operations Office

TITLE ERDF LEACHATE ELECTRICAL PLANS, ELEVATIONS AND WIRING

SIZE	SUBJ NO	SHEET NO	DWG NO	REV
D	200G	8200	H-2-833902	0

SCALE AS NOTED REF ECR-14-000762 SHEET 1 OF

XXXX PLOTTED XXXX

ECR-14-000762 Page 77

CONTOUR INTERVAL: 1 FT
HORIZONTAL COORDINATE SYSTEM: WCS83S/91 (US FEET)
VERTICAL DATUM: NAVD88 (US FEET)

LEGEND
- WATER VALVE
- PIV
- MANHOLE VALVE
- POWER POLE
- LIGHT POLE
- BOLLARD
- SIGN POST
- FENCE-POST & CHAIN
- FENCE-CHAIN LINK

NOTES:

1. MOVE THE EXISTING HDPE PIPES AS REQUIRED TO COMPLETE THE NEW CONSTRUCTION. MOVE THE PIPE TO OUTSIDE THE LIMITS OF THE NEW BERM. DO NOT DAMAGE PIPE.
2. TYPE 1 PIPE ANCHOR SEE DETAIL 3 ON H-2-833903 SH 4.
3. TYPE 4 PIPE ANCHOR SEE DETAIL 6 ON H-2-833903 SH 4.

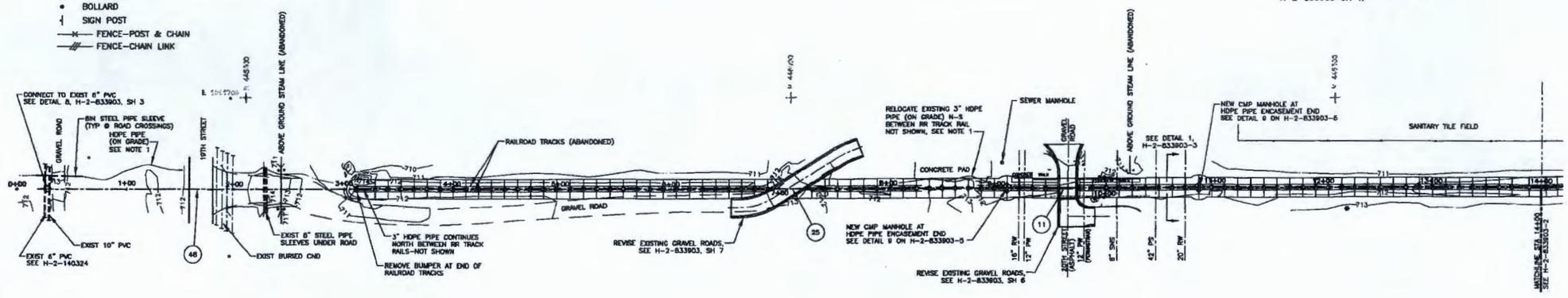

PLAN – ERDF LEACHATE TRANSFER LINE

SCALE: 1"=40'

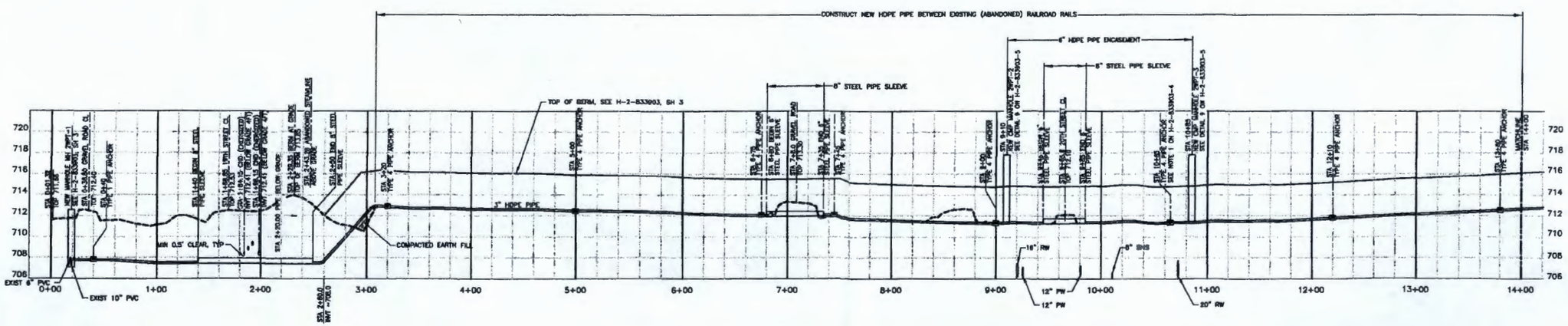

PROFILE – ERDF LEACHATE TRANSFER LINE

STA 0+0 TO STA 14+0

SCALE: VERTICAL 1"=4'
HORIZONTAL 1"=40'

DWG NO	TITLE
DRAWING TRACEABILITY LIST	

REF NUMBER	TITLE
NEXT USED ON	REFERENCES

REV NO	REV BY	DESCRIPTION	REV DATE	ENGR	CHECKED
0		INITIAL RELEASE PER ECR-14-000762			

REVISIONS

NAME: J ARMERMAN

U.S. DEPARTMENT OF ENERGY
Richland Operations Office

CIVIL
TRANSFER PIPELINE
PLAN AND PROFILE

SIZE	RUN NO	FILE NO	DWG NO	REV
F	200W	0105	H-2-833903	0

SCALE SHOWN | ECR-14-000762 | SHEET 1 OF

PLOTTED

ECR-14-000762 Page 78

CONTOUR INTERVAL: 1 FT
HORIZONTAL COORDINATE SYSTEM: WCS835/91 (US FEET)
VERTICAL DATUM: NAVD88 (US FEET)

LEGEND
- WATER VALVE
- PIV
- MANHOLE VALVE
- POWER POLE
- LIGHT POLE
- BOLLARD
- SIGN POST
- FENCE-POST & CHAIN
- FENCE-CHAIN LINK

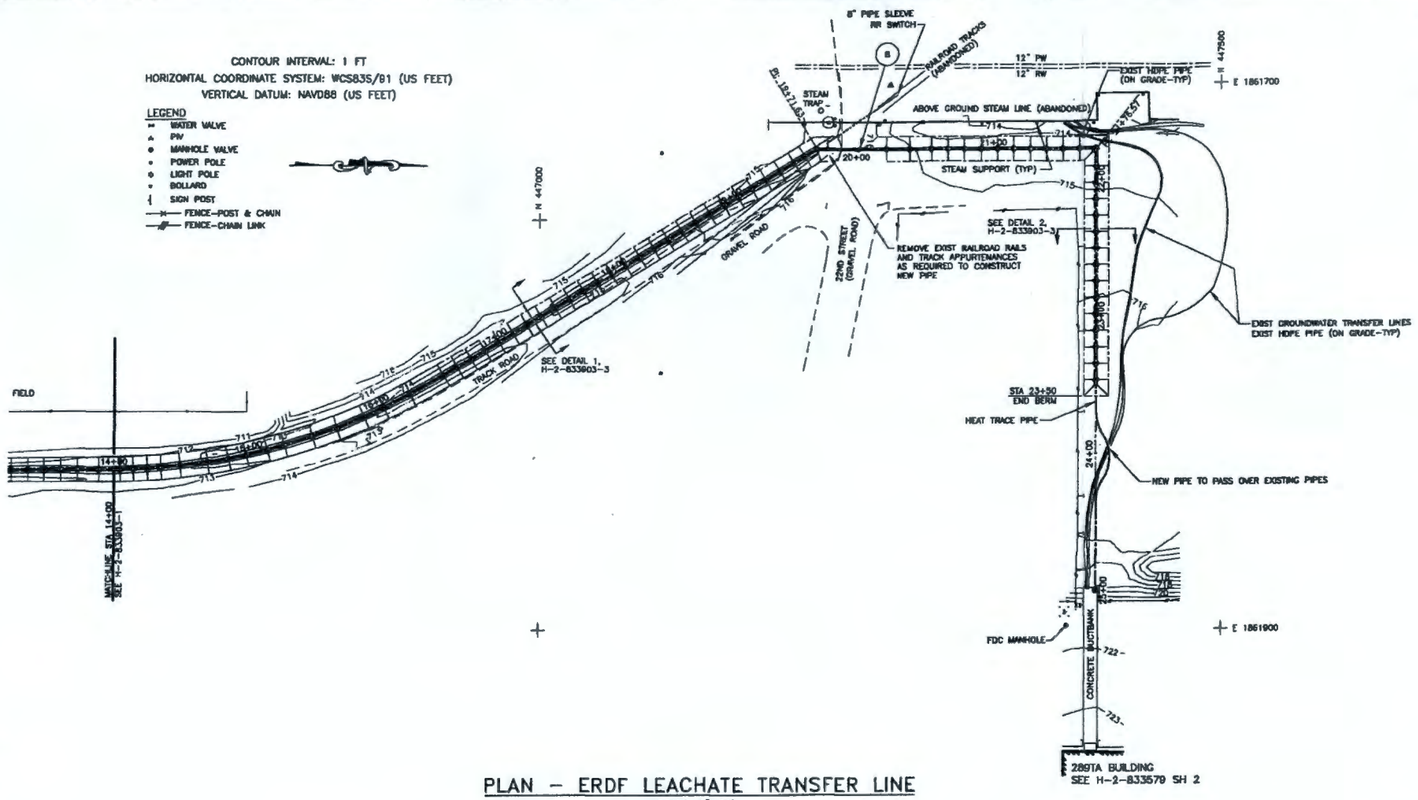

PLAN – ERDF LEACHATE TRANSFER LINE

SCALE: 1"=40'

NOTES:

1. TYPE 1 PIPE ANCHOR SEE DETAIL 3 ON H-2-833903 SH 4.
2. TYPE 2 PIPE ANCHOR SEE DETAIL 4 ON H-2-833903 SH 4.
3. TYPE 3 PIPE ANCHOR SEE DETAIL 5 ON H-2-833903 SH 4.
4. TYPE 4 PIPE ANCHOR SEE DETAIL 6 ON H-2-833903 SH 4.

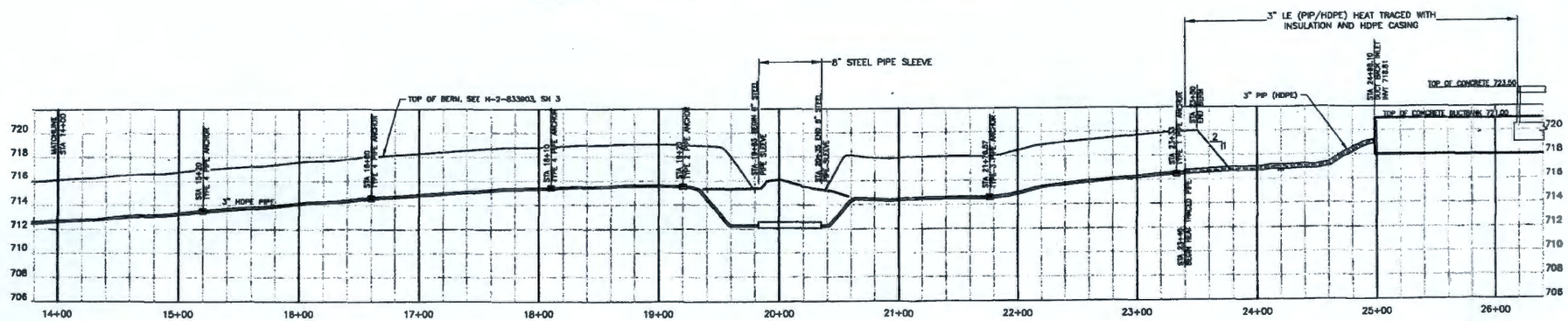

PROFILE – ERDF LEACHATE TRANSFER LINE

STA 14+0 TO STA 25+0

SCALE: VERTICAL 1"=4' HORIZONTAL 1"=40'

DWG NO	TITLE
DRAWING TRACEABILITY LIST	

REF NUMBER	TITLE
REFERENCES	
NEXT USED ON	

REV NO	DESCRIPTION
0	INITIAL RELEASE PER ECR-14-000762
REVISIONS	

NAME	DATE
J J ZIMMERMAN	10/14/2014

U.S. DEPARTMENT OF ENERGY
Richland Operations Office

CIVIL
TRANSFER PIPE LINE
PLAN AND PROFILE

SIZE	SCALE NO	SHEET NO	DWG NO	REV NO
F	200W	0105	H-2-833903	0

SCALE SHOWN ECR-14-000762 SHEET 2 OF

PLOTTED

DWG NO H-2-833903 REV 0 SH 2 OF

ECR-14-000762 Page 79

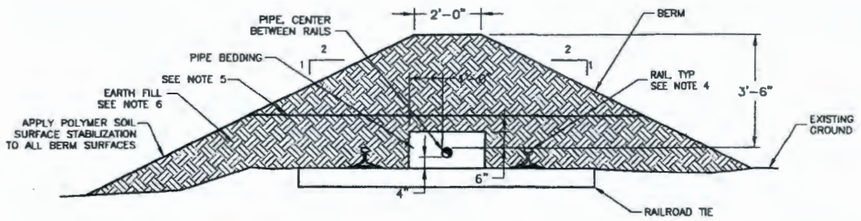

1 TYPICAL PIPE INSTALLATION ALONG RAILROAD TRACKS
SCALE: NONE
H-2-833903 SH 1 AND H-2-833903 SH 2

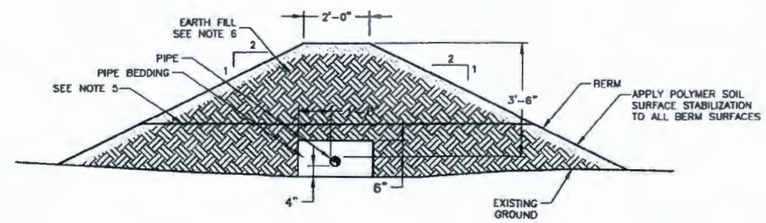

2 TYPICAL ABOVE GROUND PIPE INSTALLATION
SCALE: NONE
H-2-833903 SH 2

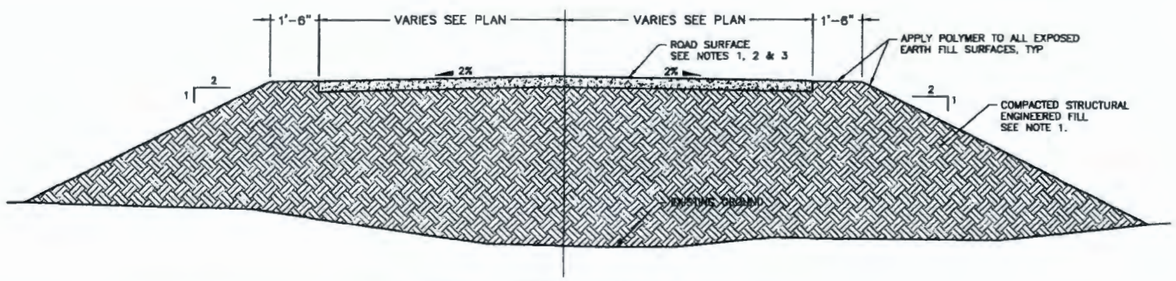

3 TYPICAL ROAD REVISION SECTION
SCALE: NONE
H-2-833903 SH 1 AND H-2-833903 SH 2

GENERAL NOTES:

1. CONSTRUCT ALL ROADWAYS IN ACCORDANCE WITH SECTION 02220 ON DWG H-1-191103, SH 8.
2. CONSTRUCT GRAVEL ROADWAYS WITH 2 INCHES OF CRUSHED GRAVEL OVER 2 INCHES OF LEVELING COURSE.
3. RESTORE ASPHALT ROADWAYS IN ACCORDANCE WITH SECTION 02512 ON DWG H-1-191103, SH 10.
4. REMOVE ALL EXISTING MATERIAL ABOVE TOP OF RAILROAD TIES BETWEEN RAILS.
5. CONSTRUCT THE BERM TO MINIMUM OF 1.0' ABOVE THE TOP OF THE PIPE OR PIPE SLEEVE THEN EXCAVATE A TRENCH IN THE BERM AND INSTALL THE PIPE OR PIPE SLEEVE AND COMPLETE CONSTRUCTION OF THE BERM.
6. USE ONSITE BORROW PIT MATERIALS AS BERM EARTH FILL.
7. EXTEND ALL VALVE STEM OPERATORS TO TOP OF MANHOLE OR PROVIDE SQUARE NUT OPERATOR WITH TEE HANDLE WRENCH.
8. EXTEND CMP MANHOLE BELOW 10" PVC AND ADJUST ELEVATION OF PRE-CAST CONCRETE RING BASE IN ACCORDANCE WITH FIELD FINDINGS. ADJUST ROTATION OF TEE FITTING AND ELEVATION OF 3" LE PIPE TO PROVIDE MINIMUM 6 INCHES CLEARANCE ALL IN ACCORDANCE WITH FIELD FINDINGS.

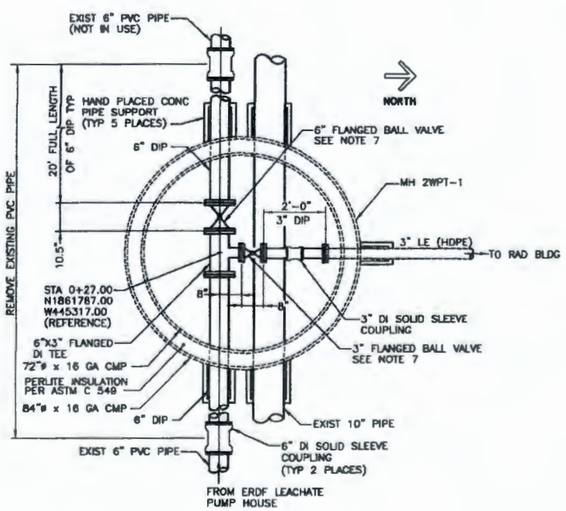

PLAN

8 CONNECTION TO 6" PVC
SCALE: NONE
H-2-833903-1

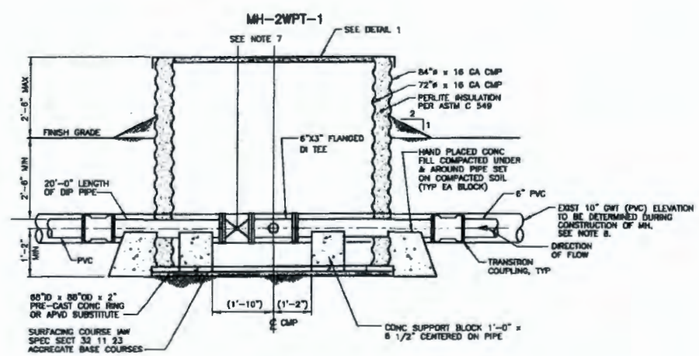

ELEVATION

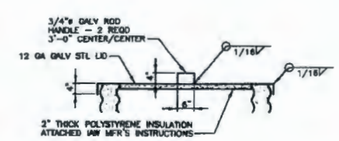

LID ASSEMBLY

1 DETAIL
SCALE: NONE

DWG NO	TITLE	REF NUMBER	TITLE
DRAWING TRACEABILITY LIST		REFERENCES	
		NEXT USED ON	

REV NO	REV DATE	DESCRIPTION	REV BY	CHKD	APPD	DATE
0		INITIAL RELEASE PER ECR-14-000762				

REVISIONS

NAME: J. ZIMMERMAN

U.S. DEPARTMENT OF ENERGY
Richland Operations Office

CIVIL
TRANSFER PIPE LINE
DETAILS

SIZE F | BLDG NO 200W | PROJ NO 0105 | DWG NO H-2-833903 | REV 0

SCALE SHOWN | ECR-14-000762 | SHEET 3 OF

PLOTID

ECR-14-000762 Page 80

H-2-833903

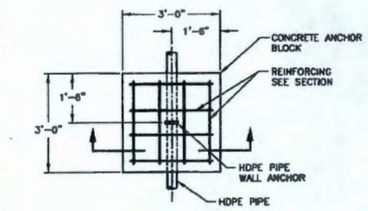

PLAN

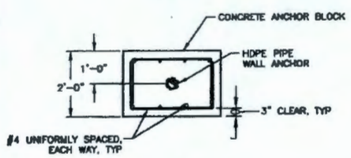

SECTION

4 TYPE 1 PIPE ANCHOR
SCALE: NONE
H-2-833903 SH 1 AND H-2-833903 SH 2

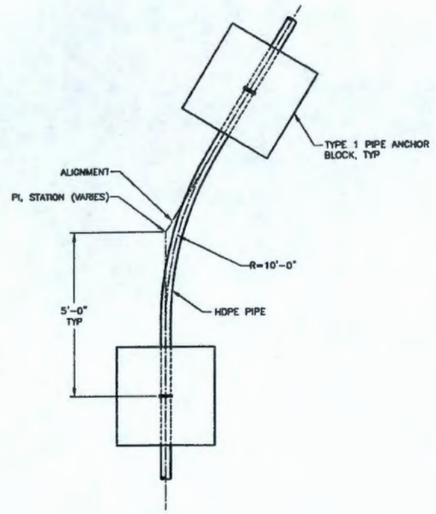

PLAN

5 TYPE 2 PIPE ANCHOR
SCALE: NONE
H-2-833903 SH 2

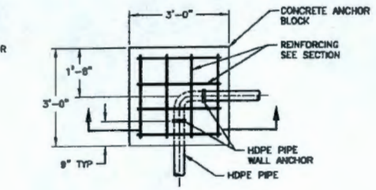

PLAN

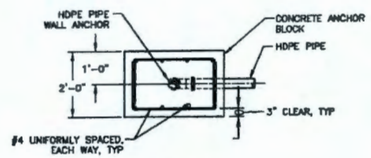

SECTION

6 TYPE 3 PIPE ANCHOR
SCALE: NONE
H-2-833903 SH 2

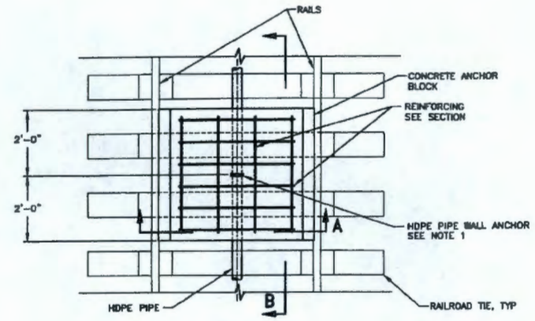

PLAN

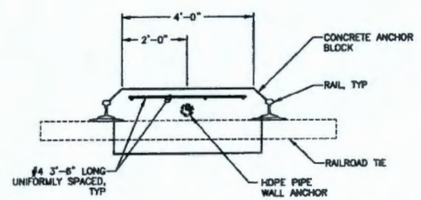

SECTION A

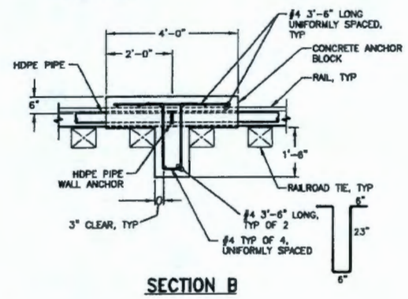

SECTION B

7 TYPE 4 PIPE ANCHOR
SCALE: NONE
H-2-833903 SH 1 AND H-2-833903 SH 2

NOTES:

1. AT STA 10+65, TERMINATE THE DWHDPE CONTAINMENT PIPE ~6 INCHES BACK FROM EITHER SIDE OF THE WALL ANCHOR AND INSTALL END SEALS. ENCASE WALL ANCHOR IN CONCRETE ANCHOR BLOCK.

DWG NO	TITLE
DRAWING TRACEABILITY LIST	

REF NUMBER	TITLE
REFERENCES	
NEXT USED ON	

REV NO	DESCRIPTION
0	INITIAL RELEASE PER ECR-14-000762

REVISIONS

NAME: J. ZIMMERMAN

U.S. DEPARTMENT OF ENERGY
Richland Operations Office

CIVIL – ERDF LEACHATE TRANSFER PIPE LINE PIPE ANCHOR DETAILS

SIZE F | SCALE 200W | SHEET NO 0105 | DWG NO H-2-833903 | REV 0

SCALE SHOWN | ECR-14-000762

ECR-14-000762 Page 81

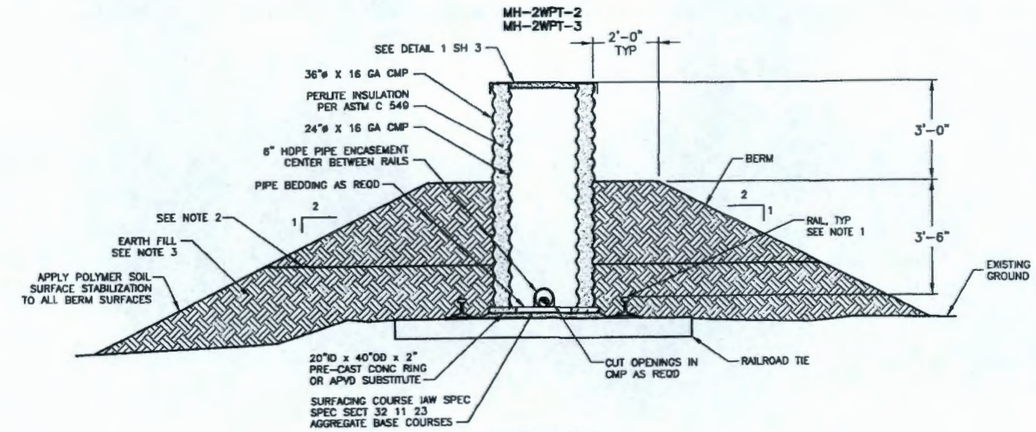

ELEVATION

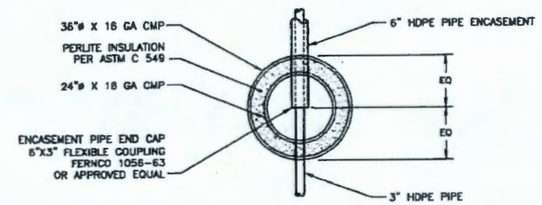

PLAN

(9) PIPE INSTALLATION AT INSPECTION MAN HOLE

SCALE: NONE
H-2-833903 SH 1

NOTES:

1. REMOVE ALL EXISTING MATERIAL ABOVE TOP OF RAILROAD TIES BETWEEN RAILS.
2. CONSTRUCT THE BERM TO MINIMUM OF 1.0' ABOVE THE TOP OF THE PIPE OR PIPE SLEEVE THEN EXCAVATE A TRENCH IN THE BERM AND INSTALL THE PIPE OR PIPE SLEEVE AND COMPLETE CONSTRUCTION OF THE BERM.
3. USE ONSITE BORROW PIT MATERIALS AS BERM EARTH FILL.

DWG NO	TITLE
DRAWING TRACEABILITY LIST	

REF NUMBER	TITLE
REFERENCES	
NEXT USED ON	

REV NO	DESCRIPTION
0	INITIAL RELEASE PER ECR-14-000762
REVISIONS	

NAME
J. AMMERMAN

U.S. DEPARTMENT OF ENERGY
Richland Operations Office

CIVIL
TRANSFER PIPE LINE
DETAILS

SIZE	SCALE	PROJ NO	DWG NO	REV
F	200W	0105	H-2-833903	0

SCALE SHOWN | ECR-14-000762 | SHEET 5 OF

PLOTTED

ECR-14-000762 Page 8a

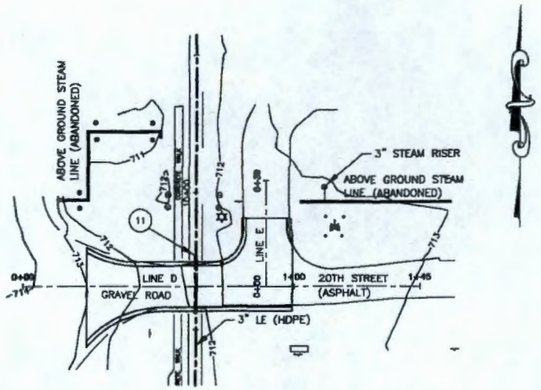

20TH STREET GRADING PLAN

NOTES:

1. REVISE EXISTING ROADS
2. SEE TYPICAL SECTION ON DRAWING H-2-833903 SH 3.
3. SEE DRAWING H-2-833903 SH 1 FOR LEGEND.

LINE D PROFILE

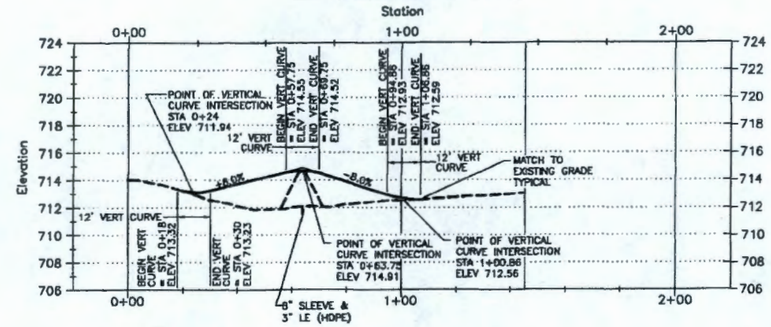

LINE E PROFILE

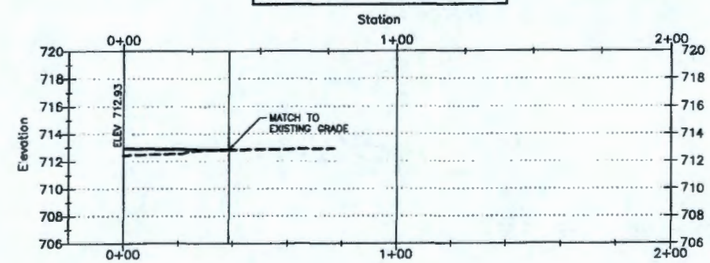

20TH STREET GRADING PROFILES

SCALE: VERTICAL 1"=4'
HORIZONTAL 1"=20'

DWG NO	TITLE
DRAWING TRACEABILITY LIST	

REF NUMBER	TITLE
REFERENCES	
NEXT USED ON	

REV NO	DESCRIPTION	DATE	CHANGE NO	CHANGED BY
0	INITIAL RELEASE PER ECR-14-000762			

REVISIONS

NAME: J. ANWERMAN

U.S. DEPARTMENT OF ENERGY
Richland Operations Office

CIVIL
ERDF LEACHATE LINE
GRADING PLAN & PROFILES

F | BLDG NO 200W | SHEET NO 0105 | DWG NO H-2-833903 | REV 0

SCALE SHOWN | DWG ECR-14-000762 | SHEET 6 OF

PLOTTED

ECR-14-000762 Page 83

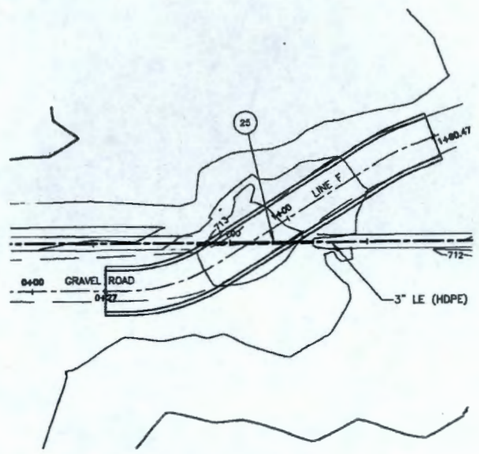

GRAVEL ROAD GRADING PLAN

SCALE: 1"=40'

LINE F PROFILE

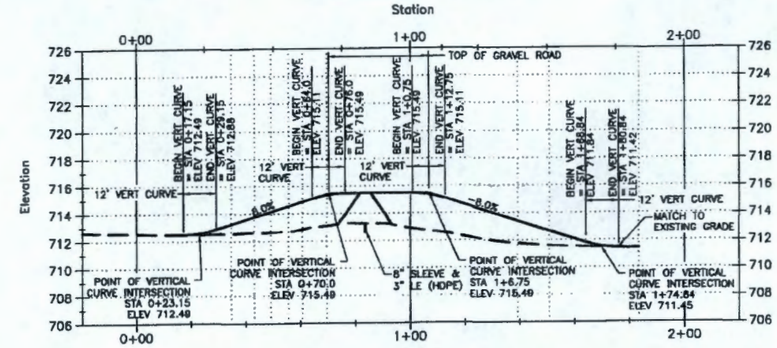

GRAVEL ROAD GRADING PROFILE

SCALE: VERTICAL 1"=4' HORIZONTAL 1"=20'

NOTES:

1. REVISE EXISTING ROADS
2. SEE TYPICAL SECTION ON DRAWING H-2-833903 SH 3.
3. SEE DRAWING H-2-833903 SH 1 FOR LEGEND.

DWG NO	TITLE
DRAWING TRACEABILITY LIST	

REF NUMBER	TITLE
REFERENCES	
NEXT USED ON	

REV NO	REV DATE	DESCRIPTION	DRWN	CHKD
0		INITIAL RELEASE PER ECR-14-000762		

REVISIONS

NAME	DATE
M. AMMERMAN	

U.S. DEPARTMENT OF ENERGY
Richland Operations Office

CIVIL
TRANSFER PIPE LINE
GRADING PLAN & PROFILE

SIZE	SCALE NO	DWG NO	REV NO
F	200W	0105	H-2-833903	0

SCALE SHOWN SH ECR-14-000762 SHEET 7 OF

PLOTTED

ECR-14-000762 Page 84

H-2-833903 SH 7 REV 0

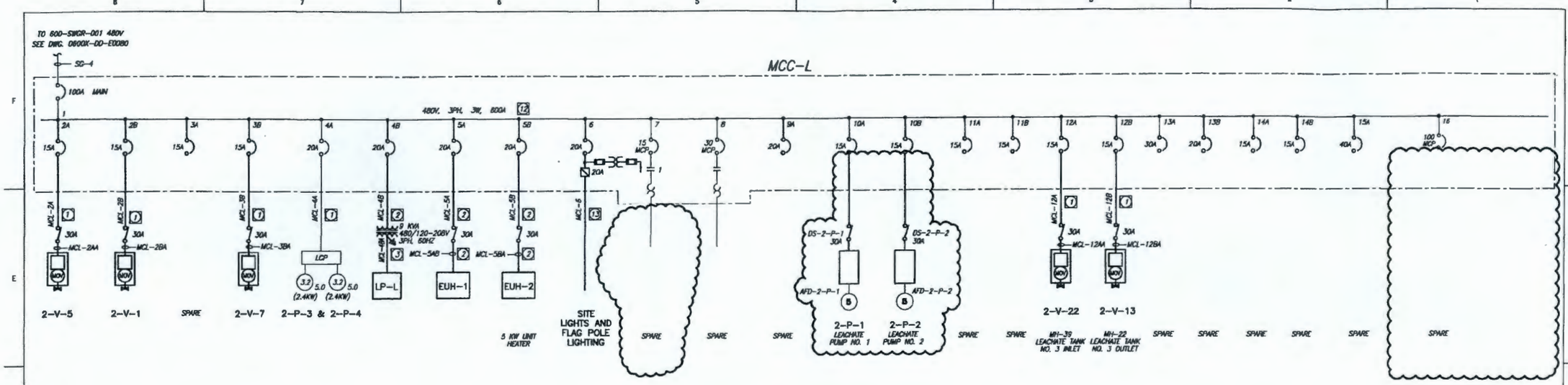

LEACHATE PUMP STATION ONE LINE DIAGRAM

MOTOR CONTROL CENTER MCC-L

NOTES

1. 2" C, 3/#12, 1/#12G
2. 3/4" C, 3/#12, 1/#12G
3. 1 1/4" C, 4/#4, 1/#8G
4. 1" C, 3/#10, 1/#10G
5. 2" C, 3/#2, 1/#6G
6. 3/#6, 1/#8G, IN EXISTING 1", HHW WIRE
8. 2" C, 2/#2, 1/#6G
9. 2" C, 2/#8, 1/#8G
10. 2KVA, 480V/120-240, 1PH, 60HZ
11. 30KVA, 480/120-208, 3PH, 60HZ
12. 42,000 AMP MINIMUM RMS SHORT CIRCUIT RATING. BREAKERS TO HAVE 25,000 AMP MINIMUM INTERRUPTING CAPACITY
13. SEE NOTE 1 FOR LIGHTS NEAR LEACHATE PUMP STATION. USE 3/#8, 1/#8G FOR LIGHTS NEAR OPERATIONS TRAILER AND WASHDOWN AREA
14. SEE DRAWING E0022 FOR CONDUIT AND CONDUCTORS TO LIGHTS

(1A) 4 / 14AWG. VENDOR SUPPLIED

(2A) 4 / 12AWG. VENDOR SUPPLIED

* CABLE MCT1-5A, VENDOR SUPPLIED CABLE HAS BEEN SPLICED. SPLICED CABLE LENGTH IS APP. 80'.

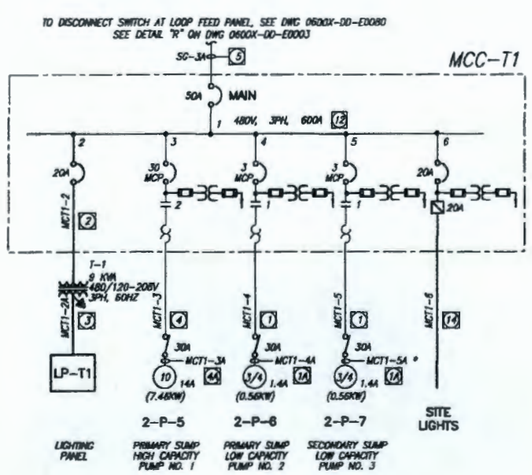

TRENCH CELL 1 ONE LINE DIAGRAM

MOTOR CONTROL CENTER MCC-T1

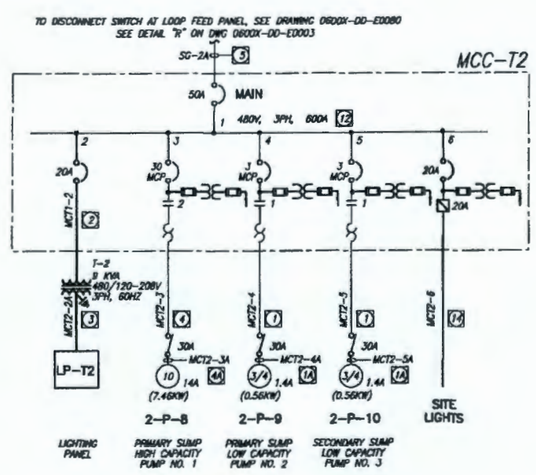

TRENCH CELL 2 ONE LINE DIAGRAM

MOTOR CONTROL CENTER MCC-T2

REFERENCE

THE FOLLOWING ITEMS WERE NOT FIELD VERIFIED DURING CONFIGURATION VERIFICATION WALKDOWNS; NOTES; FUSE SIZES; CONDUCTOR SIZES; CONDUCTOR INSULATION; NUMBERS OF CONDUCTORS; CONDUCTOR MATERIAL; AND BURIED CONDUIT SIZES.

IF THIS LINE DOES NOT MEASURE 1 INCH THE DRAWING HAS BEEN REDUCED

WASHINGTON CLOSURE HANFORD, LLC
RICHLAND, WASHINGTON

DOE CONTRACT NO. DE-AC06-05RL-14655

4	4/26/07	INCORPORATED FOR 2006-20 (2007-01) & 2006-19 (2007-02) UPDATES			
3		INCORPORATED FOR 06-2003			
2		UPDATE LICENSE INFO			
1		AS-BUILT INCORPORATED FOR 06-0041 (06-06-2006) AS NOTED			
0		AUTHORIZED FOR IMPLEMENTATION			

DESIGNED	D. Chase	2-95	
DRAWN	S. Lemay	2-95	
CHECKED	W. Sandoval	2-95	
APPROVED	R.R. Jones	4/21/95	
	W.R. Sheter	4/21/95	
	J. Carson	4/21/95	
	J. Allen	4/21/95	

U.S. DEPARTMENT OF ENERGY
Richland Operations Office
Operated by U.S. Army Corps of Engineers, Walla Walla District
Contractor: Bechtel National

MCC-L ONE LINE DIAGRAM - 1

W - GREEN ENVIRONMENTAL RESTORATION DISPOSAL FACILITY (GERDF)

1	0000 7201	0600X-DD-E0072	11

PLOT SCALE:

ECR-14-000762 Page 85

(0600X-DD-E0012)

208-120 VOLTS 3 ϕ 4 W — PANELBOARD LP-T1 — FEED TOP
30 AMP MAIN BREAKER — LOCATION LEACHATE CELL 1 CONTROL BUILDING 6618A — MTG SURFACE

LOAD DESCRIPTION	VOLT AMPERE ϕA	ϕB	ϕC	LTG	REC	MIS	CKT	BKR		BKR	CKT	MIS	REC	LTG	VOLT AMPERE ϕA	ϕB	ϕC	LOAD DESCRIPTION
LIGHTS-CONTROL BUILDING	300			3			1	20		20	2							SPARE
EF-1		280					3	20		20	4							SPARE
SPARE							5	20		20	6	X					600	TRENCH PUMP CONTROL PANEL
SPARE							7	20		20	8				1200			TELEMETRY PANEL
RECEPTACLES-CONTROL BLDG		400			2		9	20			10							SPACE
SPARE							11	20			12							SPACE
LP-T1-1	2057						13				14							SPACE
		2471					15	30			16							SPACE
			1751				17				18							SPACE
	2357	3151	1751				TOTAL			TOTAL					1200		600	
	PHASE TOTAL			TOTAL LOAD														
	3357	3151	2351	9.7 KVA (AMP)														

(0600X-DD-E0012)

208-120 VOLTS 3 ϕ 4 W — PANELBOARD LP-T2 — FEED TOP
30 AMP MAIN BREAKER — LOCATION LEACHATE CELL 2 CONTROL BUILDING 6618B — MTG SURFACE

LOAD DESCRIPTION	VOLT AMPERE ϕA	ϕB	ϕC	LTG	REC	MIS	CKT	BKR		BKR	CKT	MIS	REC	LTG	VOLT AMPERE ϕA	ϕB	ϕC	LOAD DESCRIPTION
LIGHTS-CONTROL BUILDING	300			3			1	20		20	2							SPARE
EF-1		280					3	20		20	4					1200		TELEMETRY PANEL
SPARE							5	20		20	6	X					600	TRENCH PUMP CONTROL PANEL
SPARE							7	20		20	8							SPARE
RECEPTACLES-CONTROL BLDG		400			2		9	20			10							SPACE
SPARE			600		2		11	20			12							SPACE
LP-T2-1	2057						13				14							SPACE
		2471					15	30			16							SPACE
			1751				17				18							SPACE
	2357	3151	1751				TOTAL			TOTAL					1200		600	
	PHASE TOTAL			TOTAL LOAD														
	2357	4351	2351	9.7 KVA (AMP)														

(0600X-DD-E0012)

208-120 VOLTS 3 ϕ 4 W — PANELBOARD LP-1 — FEED TOP
30 AMP MAIN BREAKER — LOCATION LEACHATE PUMP STATION 6618C — MTG SURFACE

LOAD DESCRIPTION	VOLT AMPERE ϕA	ϕB	ϕC	LTG	REC	MIS	CKT	BKR		BKR	CKT	MIS	REC	LTG	VOLT AMPERE ϕA	ϕB	ϕC	LOAD DESCRIPTION
LIGHTS-ELECTRICAL ROOM	700			6			1	20		20	2	X			1200			PS-117
LIGHTS-PUMP ROOM		950		8			3	20		20	4							SPARE
LIGHTS-OUTSIDE			150	2			5	20		20	6							SPARE
SPARE							7	20		20	8	X						SPARE
CF-1		800				X	9	20		20	10					35		FDAS
CF-2			800			X	11	20		20	12							SPARE
RECEPTACLES - ELEC. RM	600				3		13	20		20	14							SPARE
RECEPTACLES - PUMP RM		800			3		15	20			16							SPACE
LEACHATE STORAGE TANK LEVEL			1200				17	20			18							SPACE
SPACE							19				20							SPACE
	1500	2350	2150				TOTAL			TOTAL					1200	35	0	
	PHASE TOTAL			TOTAL LOAD														
	2305	2385	2150	6.1 KVA (AMP)														

PANEL SCHEDULES

LIGHTING FIXTURE SCHEDULE

TYPE	USACE STD. 40-06-04 TYPE	WATTS LAMP	VOLTS	DESCRIPTION
F5	230A	2-40 W R.S FLUOR	120	INDUSTRIAL TYPE FLUORESCENT FIXTURE, 1' x 4', 2 LAMP, HEAVY GAGE STEEL REFLECTOR, WHITE POLYESTER POWDER ENAMEL FINISH
H2		50 W HPS	120	WALL MOUNT, HIGH PRESSURE SODIUM, ROUND OPEN BAFFLE, WEATHERPROOF GASKETING, BRONZE FINISH
H3	401C	250 W HPS	480	POLE MOUNTED, HIGH PRESSURE SODIUM, LIGHTWEIGHT ALUMINUM, RECTILINEAR SHAPE, CONTINUOUS GASKET, TEMPERED GLASS LENS FLUSH WITH BOTTOM OF FIXTURE, U.L. LISTED FOR WET LOCATIONS. 25 FOOT ROUND TAPERED ALUMINUM POLE SUITABLE FOR 100 MPH WINDS AND MATCHED TO FIXTURE

REFERENCE

ECR-14-000762 Page 84

AS-BUILT ISSUED TO INCORPORATE DCN-0600X-DD-E0014-06-01 CONFIGURATION VERIFICATION WALKDOWN UPDATE. ADDED SUPPLEMENTAL NOTE "B" ADDED SUPPLEMENTAL NOTE "A" ADDED SUPPLEMENTAL NOTE "A" ISSUED AS-BUILT TO INCORPORATE DCN-0600X-DD-E0013-06-01 — 11/6/01 — ABR, BAC, DBG, HDG, N/A, N/A

ISSUED AS-BUILT TO INCORPORATE DCN-0600X-DD-E0012-06-01 — 11/6/01 — SJK, KJB, RRA, KBG, N/A, N/A

WASHINGTON CLOSURE HANFORD LLC.
RICHLAND, WASHINGTON
DOE CONTRACT NO. DE-AC06-05RL-14655

ISSUED AS-BUILT LEACHATE UPGRADE — DAB, RCM, DAB, RGG, BS

REVISED TO INCORPORATE FCN-2001-0002 — DAB, BAC, BAC, BAC, BAC

INCORPORATED FCN-98-0055 — CAE 2/14/98, DAB 2/20/98, BAC 3/23/98, ARM 3/26/98

UPDATE LICENSE INFO — MGH 1-5-97, MARTINEZ 1-29-97, DAM 4-23-97, ARM 1-23-97

AS-BUILT INCORPORATED FCN-95-0142, CH-95-0056, FCN-95-0158 AND REDLINES — MGH 9-4-96, LEMBER 8-16-96, MARTINEZ 8-27-96, RCP 11-19-96, ARM 11-19-96

DCN-1 INCORPORATED — RCP 10-9-96, DATE 2/20/96, ARM 4/21/96

AUTHORIZED FOR IMPLEMENTATION — ORIGINALS SIGNED

THE FOLLOWING ITEMS WERE NOT FIELD VERIFIED DURING CONFIGURATION VERIFICATION WALKDOWNS; LIGHTING FIXTURE SCHEDULE; FUSE SIZES; CONDUCTOR SIZES, CONDUCTOR INSULATION; NUMBERS OF CONDUCTORS; CONDUCTOR MATERIAL; AND BURIED CONDUIT SIZES.

RECORD DRAWING

SHOW RECORD DRAWINGS WERE NOT REVIEWED BASED ON INFORMATION PROVIDED BY WASHINGTON CLOSURE INC. NOT VERIFIED THE ACCURACY OF RADIO INFORMATION AND SHALL NOT BE RESPONSIBLE FOR ANY DRAWING OR DRAWINGS WHICH MAY BE INCORPORATED HEREON AS A RESULT.

G. Green 2-95
S. Lorenz 2-95
W. Spalding 2-95
S.R. KIRNEY 4/21/95
W.E. SHAFER 4/21/95
J. CARSON 4/21/95
L. ALLEN 4/21/95
A. MICHAEL 4/21/95

U.S. DEPARTMENT OF ENERGY
Richland Operations Office
Prepared for: U.S. ARMY CORPS OF ENGINEERS, Walla Walla District
By: MORRISON KNUDSEN WATSON

ELECTRICAL SCHEDULES

W-29 ENVIRONMENTAL RESTORATION DISPOSAL FACILITY (ERDF)

F 600G 7404 0600X-DD-E0014 9

SCALE NONE

PLOT SCALE:

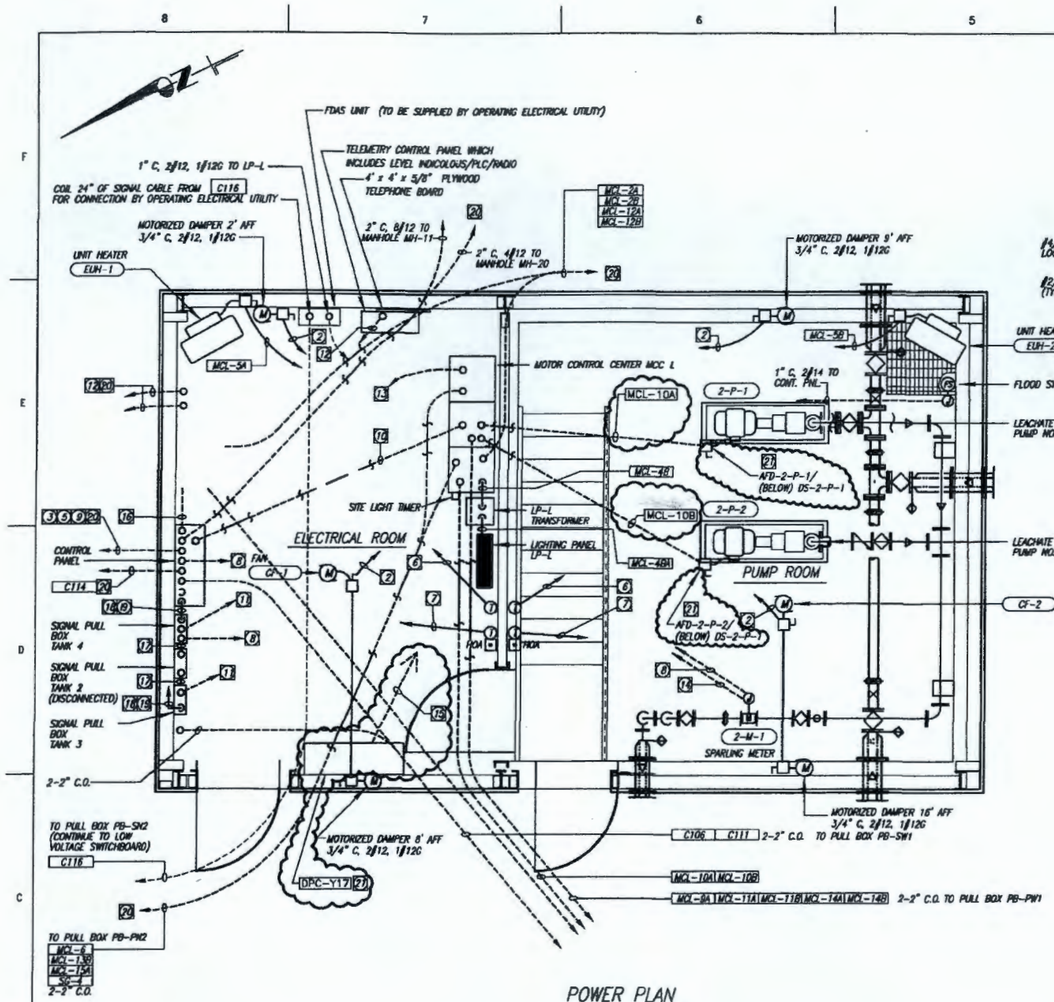

POWER PLAN

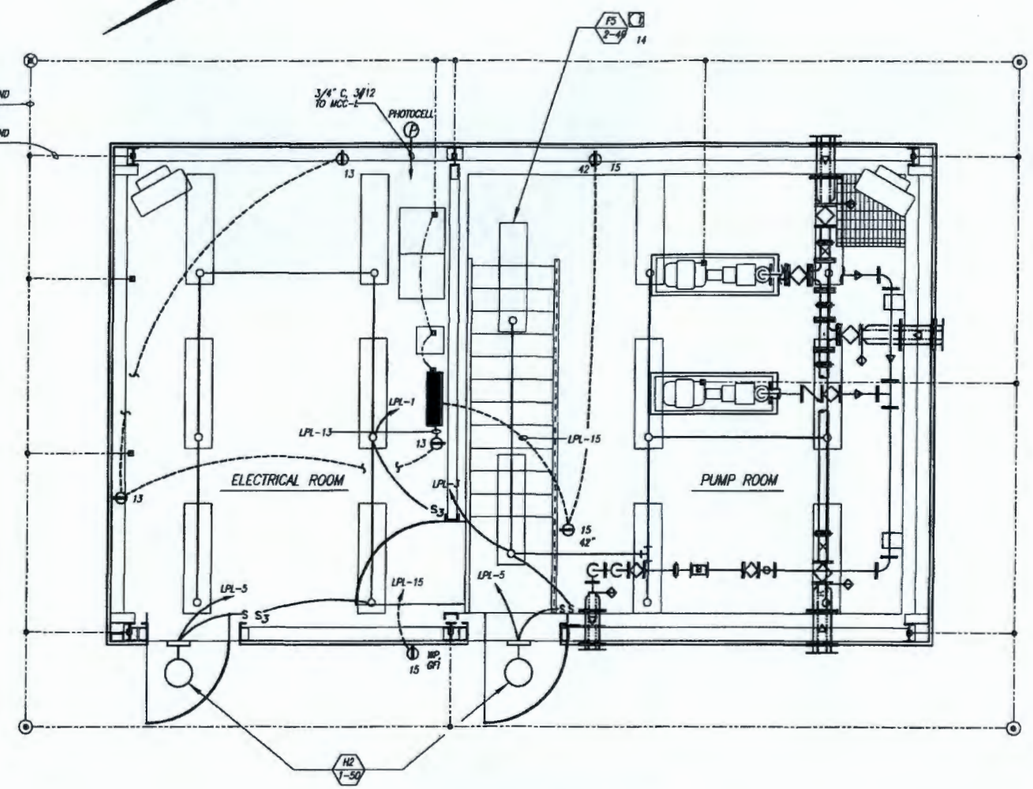

LIGHTING AND GROUNDING PLAN

REFERENCE

NOTES

1. MOUNT LIGHTS IN PUMP ROOM 12' ABOVE FLOOR EXCEPT LIGHT OVER ENTRANCE LANDING SHALL BE SURFACE MOUNTED ON CEILING
2. 3/4" C, 2#12, 1#12G TO LP-L
3. 2" C, 2#12 TO LIFT STATION NO. 1
4. NOT USED
5. 2" C, 6#12 TO MANHOLE MH-13
6. 3/4" C, 2#14 TO UNIT HEATER
7. 3/4" C, 2#12 TO FAN
8. 1" C, ~~2#18, 1#18G TO LP-L~~, 2#14 TO CONTROL PANEL
9. 2" C, 24#12 AND 3" C, 3-2/C #16 SHLD. TO LEACHATE LOADING STATION CONTROL PANEL
10. 2" C, 10#14 TO CONTROL PANEL
11. 2" C, VENDOR CABLE TO ULTRASONIC TRANSDUCER AT LEACHATE STORAGE TANK
12. 2-2" C.O. TO PULL BOX PB-SN2
13. MCL-6 TO SITE LIGHTS
14. 1" C, 2/C #16 SHLD. TO CONTROL PANEL (FLOWMETER)
15. 1" C, 2#12, 1#12G TO LP-1
16. 2" C, 40#12
17. 3/4" C, 3#12, 1#12G
18. 3/4" C, 6#12 TO CONTROL PANEL
19. 3/4" C, 2/C #19 SHLD. TO CONTROL PANEL
20. FOR CONTINUATION SEE DRAWING E0010
21. FOR ADDITIONAL WIRING INFORMATION SEE H-2-93902 SH 1

11/1/94	ISSUED TO INCORPORATE DCN-W0030-00-W018-02(a) AS-BUILT TO EXISTING CONDITIONS PER DIRECT REVISION TO DRAWING	GSW	DR	RSS	KDG	N/A	WMB
	ISSUED AS-BUILT LEACHATE UPGRADE	CRB	MC	MC	DRM 1-31-95	ARM 1-31-95	
	REVISED TO INCORPORATE DCN-2001-0001	CRB 2-2-95		N.SWITZ 1-31-95	DRM 1-31-95	ARM 1-31-95	
	UPDATE LICENSE INFO	MGM 2-2-95		N.SWITZ 2-13-95	DRM 2-13-95	ARM 2-13-95	
	AS-BUILT, INCORPORATED FDN-96-0290 AND DCN-1	MGM 3-8-96	MGM/GR 3-18-96	N.SWITZ 4-12-96	DRM 4-12-96	ARM 11-26-96	
	DCN-1 INCORPORATED	GR 10-6-97	GR/DB 10-6-97			ARM 12/11/98	
	AUTHORIZED FOR IMPLEMENTATION			ORIGINALS SIGNED			

WASHINGTON CLOSURE HANFORD, LLC.
RICHLAND, WASHINGTON

DOE CONTRACT NO. DE-AC06-05RL-14655

CENTIMETERS 0 50 100 200
FEET 0 1 5
1/2" = 1' - 0"

RECORD DRAWING
THESE RECORD DRAWINGS HAVE BEEN PREPARED BASED ON INFORMATION PROVIDED BY OTHERS. THE ENGINEER HAS NOT VERIFIED THE ACCURACY OF SUCH INFORMATION AND SHALL NOT BE RESPONSIBLE FOR ANY ERRORS OR CHANGES WHICH MAY BE INCORPORATED HEREIN AS A RESULT.

Drawn	C. Bason 2-95
Checked	S. Lorenz 2-95
Checked	M. Sanford 2-95
Approved	S.R. JURNEY 4/21/95
Approved	W.E. SHAFER 4/21/95
Approved	J. CARSON 4/21/95
Approved	L. ALLEN 4/21/95
Approved for Release	A. MICHEL 4/21/95

U.S. DEPARTMENT OF ENERGY
Richland Operations Office
Prepared for: U.S. ARMY CORPS OF ENGINEERS, Walla Walla District
By: MONTGOMERY WATSON

LEACHATE PUMP STATION ELECTRICAL PLANS

W-296 ENVIRONMENTAL RESTORATION DISPOSAL FACILITY (ERDF)

Size	Dwg No.	Sheet No.	Rev. No.
F	0600X-DD-E0020	6	

Scale 1/2" = 1'-0" Job No. 12210.0720

PLOT SCALE:

ECR-14-000762 Page 87

DRAWING NO.	REV. NO.
0600X-DD-M0013	4

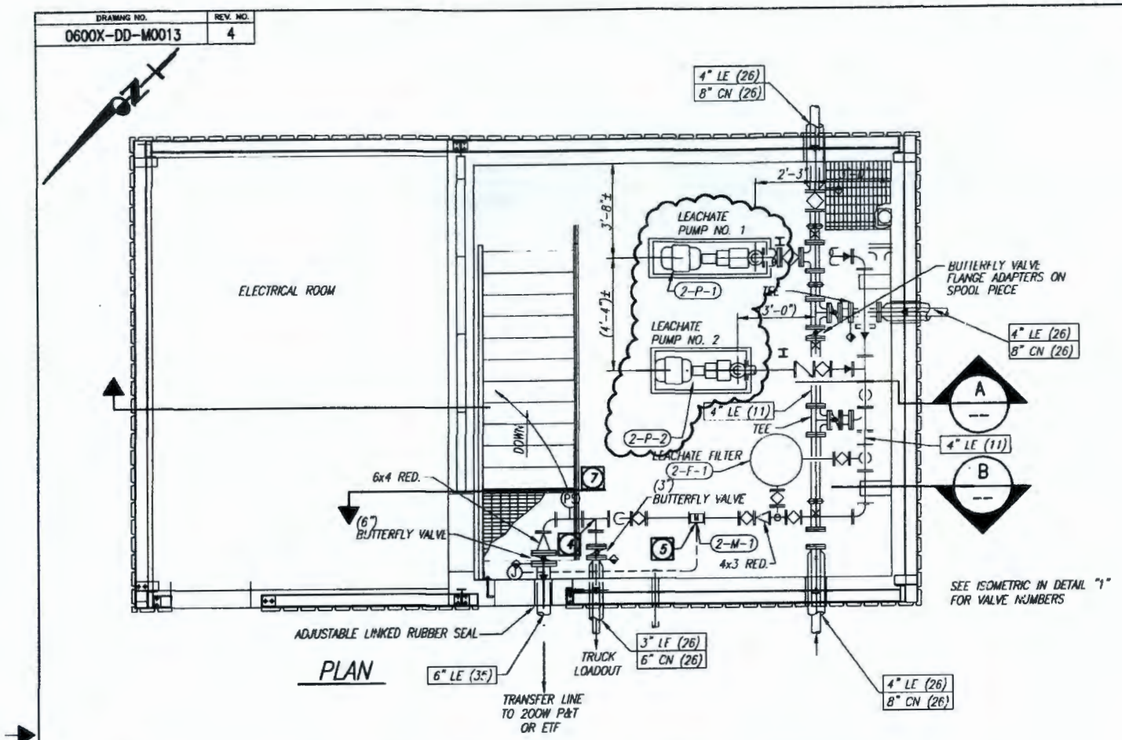

PLAN

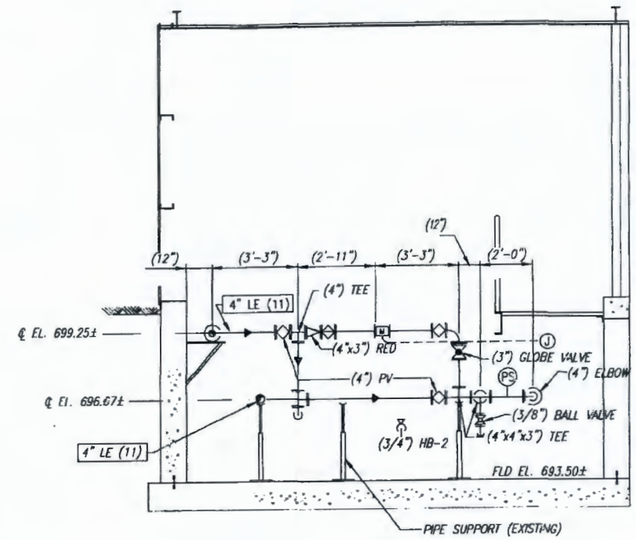

SECTION B

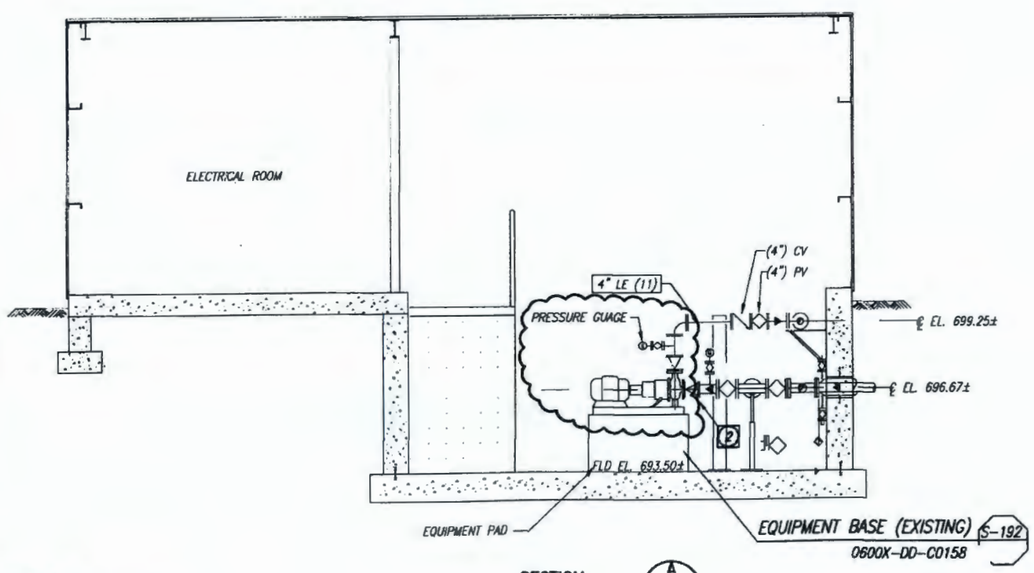

SECTION A

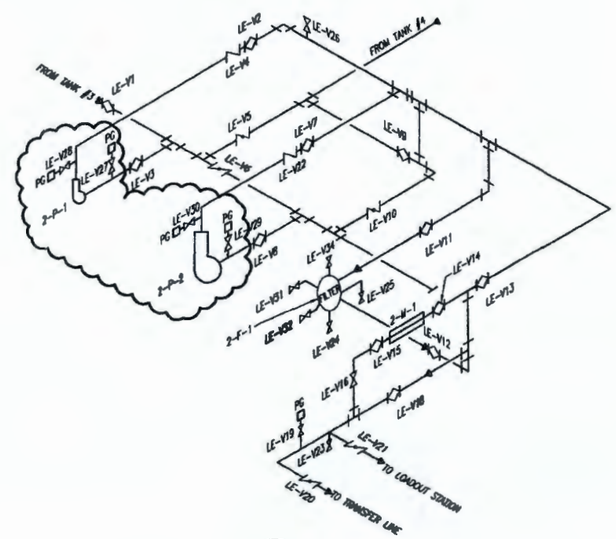

DETAIL 1
NTS

NOTES

1. NOT USED
2. USE FLANGE ADAPTER ON SPOOL PIECE FOR ADJUSTMENT.
3. NOT USED
4. TAPPED TEE WITH (3/8") TAP.
5. FLOW METER OUTPUT TO JUNCTION BOX UNDER STAIRS. (3/4"C, 2/C #16 SHLD) SEE SINGLE LINE DIAGRAM ON DRAWING 0600X-DD-E0054.
6. NOT USED
7. HIGH PRESSURE SWITCH. SEE SCHEMATIC ON DRAWING 0600-DD-E0054. ROUTE 19mm(3/4") CONDUIT AND 2#12 WIRES TO MCC-1.

REFERENCE

THIS AS-BUILT DRAWING REPRESENTS THE ENGINEERS BEST UNDERSTANDING OF THE CURRENT AS-CONSTRUCTED CONDITION. IT HAS BEEN PREPARED, IN PART ON THE BASIS OF INFORMATION FURNISHED BY OTHERS. USERS ARE CAUTIONED THAT SOME ASPECTS OF THE CONFIGURATION SHOWN COULD NOT BE VERIFIED AND SO MAY NOT REPRESENT THE EXACT LOCATION, TYPE OF COMPONENT, OR EXACT MANNER IN WHICH THE PROJECT WAS FINALLY CONSTRUCTED. ALL INFORMATION SHOULD BE VERIFIED IN THE FIELD PRIOR TO PERFORMING WORK.

REV.	DATE	DESCRIPTION	DRAWN BY	CHKD BY	ENGR BY	ENGR APV.	SUB. ENGR	PROJ. ENGR
4	4/28/14	AS-BUILT ISSUED TO INCORPORATE DCN-0600X-DD-M0013-02-01 AND MINOR REVISION	CR	CHT	TDT	WAB	JVA	RAB
3	1/14/13	AS-BUILT ISSUED TO INCORPORATE DCN-0600X-DD-M0013-02-01	RMM	SR	TDT	WAB	JVA	RAB

SCALE: AS SHOWN

U.S. DEPARTMENT OF ENERGY
DOE RICHLAND OPERATIONS OFFICE
RIVER CORRIDOR CLOSURE CONTRACT

WASHINGTON CLOSURE HANFORD LLC
RICHLAND, WASHINGTON

ENVIRONMENTAL RESTORATION DISPOSAL FACILITY
CELLS 3 & 4
LEACHATE PUMP STATION PUMP & PIPING MODIFICATIONS

WCH JOB NO.	DOE CONTRACT NO.	CADD FILENAME
14655	DE-AC06-05RL-14655	6XDM0813.DWG

TASK	DRAWING NO.	REV. NO.
ERDF	0600X-DD-M0013	4

CENTIMETERS 0 50 100 200
FEET 0 1 2 3 4 5

Dedicated To Excellence

RECORD INFORMATION

RECORD NO.	BLDG NO.	INDEX NO.
H-6-14837 SHT01	600G	0105

ECR-14-0007762 Page 88

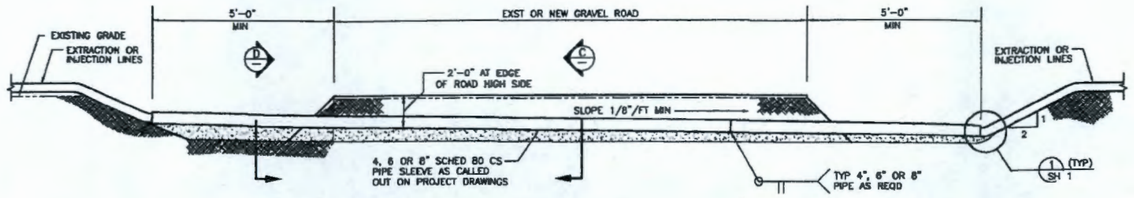

CASE 6 ROAD CROSSING DETAIL
EXTRACTION OR INJECTION LINES
SCALE: NONE

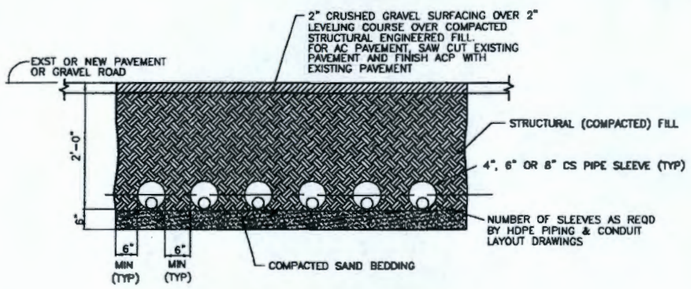

C CASE 6
ROAD CROSSING SECTION
SCALE: NONE

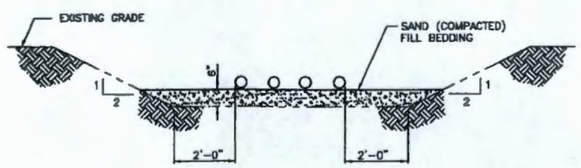

D CASE 6
CROSSING SECTION
SCALE: NONE

NOTES:

1. FOR GENERAL NOTES SEE SHEET 1.

INCLUDED IN FMP FOR INSTALLATION INFORMATION

DWG NO	TITLE
DRAWING TRACEABILITY LIST	

REF NUMBER	TITLE
REFERENCES	
NEXT USED ON END USE	

REV NO	REV DATE	DESCRIPTION	BY	CHKD	APPD
1		PER ECR-10-002078 PROJECT TURNOVER			

REVISIONS

NAME	DATE
MOSSBRUCKER	
SCHROEDER	
HUMAN	
CONSELMAN	
GERALD HOPKINS	

U.S. DEPARTMENT OF ENERGY
Richland Operations Office

STANDARD PUMP & TREAT
CIVIL
ROAD CROSSING DETAILS

SIZE	BLDG NO	SHEET NO	DWG NO	REV
F	1000	0200	H-1-91103	1

SCALE NONE | BY DCN-DX-001 | SHEET 4 OF

ECR-14-000762 Page 89

H-1-91103

SECTION 02220

EXCAVATING, BACKFILLING, AND COMPACTING

PART 1 – GENERAL

1.1 REFERENCES

1.1.1 THE FOLLOWING DOCUMENTS AND OTHERS REFERENCED THEREIN FORM PART OF CONTRACT TO EXTENT DESIGNATED IN THIS SECTION. REFERENCED DOCUMENTS ARE THOSE CURRENT AS OF THE DATE OF THIS SECTION UNLESS OTHERWISE INDICATED.

1.1.1.1 AMERICAN SOCIETY FOR TESTING AND MATERIALS (ASTM)

D 653	TERMINOLOGY RELATING TO SOIL, ROCK, AND CONTAINED FLUIDS
D 1557	TEST METHOD FOR LABORATORY COMPACTION CHARACTERISTICS OF SOIL USING MODIFIED EFFORT
D 2922	TEST METHODS FOR DENSITY OF SOIL AND SOIL AGGREGATE IN PLACE BY NUCLEAR METHODS (SHALLOW DEPTH)
D 3017	TEST METHOD FOR WATER CONTENT OF SOIL AND ROCK IN PLACE BY NUCLEAR METHODS (SHALLOW DEPTH)
D 4253	TEST METHODS FOR MAXIMUM INDEX DENSITY AND UNIT WEIGHT OF SOILS USING A VIBRATORY TABLE

1.1.1.2 CODE OF FEDERAL REGULATIONS (CFR)

TITLE 29	LABOR
PART 1926	SAFETY AND HEALTH REGULATIONS FOR CONSTRUCTION

1.1.1.3 WASHINGTON STATE DEPARTMENT OF TRANSPORTATION (WSDOT)

M41-10	ROAD, BRIDGE, AND MUNICIPAL CONSTRUCTION
M46-01	MATERIALS MANUAL

1.2 SUBMITTALS

1.2.1 SEE STATEMENT OF WORK FOR SUBMITTAL PROCESS.

1.2.2 APPROVAL REQUIRED

1.2.2.1 DAMAGE PREVENTION PROCEDURE: BEFORE EXCAVATION, SUBMIT PROCEDURE TO PREVENT OVERSTRESSING EXISTING STRUCTURES, AND INTERRUPTING EXISTING SERVICES.

1.2.3 APPROVAL NOT REQUIRED

1.2.3.1 COMPETENT PERSON: BEFORE EXCAVATION AND IN WRITING, SUBMIT IDENTITY OF INDIVIDUAL DESIGNATED COMPETENT PERSON AS DEFINED IN 29 CFR 1926.650.

1.3 QUALITY ASSURANCE

1.3.1 DELIVERABLE DOCUMENTATION: THE FOLLOWING DOCUMENTS AND RECORDS, REQUIRED BY THIS SECTION, SHALL BE DELIVERED TO COMPANY IN ACCORDANCE WITH THE STATEMENT OF WORK.

DOCUMENT	PARAGRAPH
BACKFILL PERMIT	1.4.1
EXCAVATION PERMIT	1.4.1
SOIL COMPACTION TEST REPORT	3.7.1.2

1.4 PERMITS

1.4.1 OBTAIN FROM COMPANY AND CONSPICUOUSLY POST THE FOLLOWING PERMITS BEFORE STARTING WORK UNDER THIS SECTION.

A. BACKFILL PERMIT

B. EXCAVATION PERMIT

1.5 SITE CONDITIONS

1.5.1 DO NOT PLACE BACKFILL AND FILL ON FROZEN GROUND.

PART 2 – PRODUCTS

2.1 MATERIALS

2.1.1 USE MATERIALS FREE OF FROZEN PARTICLES, LUMPS, ORGANIC MATTER AND TRASH FOR BACKFILL AND FILL, BEDDING, AND STABILIZATION.

2.1.2 BACKFILL AND FILL: OBTAIN FROM EXCAVATION OR LOCATIONS DESIGNATED BY COMPANY.

2.1.2.1 COMMON: WELL-GRADED AND UNIFORMLY MIXED SOIL WITH LARGEST PARTICLE BEING 3 INCHES IN GREATEST DIMENSION AND CONSTITUTING NOT MORE THAN 40% IN VOLUME.

2.1.2.2 STRUCTURAL: WELL-GRADED AND UNIFORMLY MIXED SOIL WITH LARGEST PARTICLE BEING 3 INCHES IN GREATEST DIMENSION AND CONSTITUTING NOT MORE THAN 20% IN VOLUME.

2.1.3 BEDDING FOR PIPING AND UTILITY LINES: SAND AS DEFINED IN ASTM D 653 OR EXCAVATED SANDY MATERIAL HAVING LESS THAN 20% GRAVEL PARTICLES. GRAVEL PARTICLES SHALL HAVE A MAXIMUM DIMENSION OF 1/2 INCH.

2.1.4 LOCATION MARKER: 3 INCH WIDE, DETECTABLE PLASTIC TAPE IMPRINTED AT MAXIMUM 4 FOOT INTERVALS WITH WARNING SUCH AS "CAUTION BURIED INSTALLATION BELOW." "TERRA TAPE SENTRY LINE 620" WITH "TERRA CLIPS," BOTH BY REEF INDUSTRIES, OR APPROVED SUBSTITUTE.

2.1.5 TOP COURSE: WSDOT M41-10, SECTION 9-03.9(3), TOP COURSE

2.1.6 SHOULDER ROCK: SAME AS TOP COURSE

2.1.7 STABILIZATION: SAME AS TOP COURSE

PART 3 – EXECUTION

3.1 EXCAVATION

3.1.1 NOTIFY COMPANY BEFORE EXCAVATING.

3.1.2 LOCATE AND EXPOSE UNDERGROUND UTILITIES BY HAND TOOLS.

3.1.3 IF CULTURAL PROPERTIES (E.G., BONES AND ARTIFACTS) ARE ENCOUNTERED, STOP EXCAVATION AND NOTIFY COMPANY. OBTAIN APPROVAL BEFORE RESUMING EXCAVATION.

3.1.4 IF UNEXPECTED DEBRIS IS ENCOUNTERED, STOP EXCAVATION, CLEAR PERSONNEL TO 30 FEET FROM DEBRIS, AND NOTIFY COMPANY. OBTAIN APPROVAL BEFORE RESUMING EXCAVATION.

3.1.5 EXCAVATE EARTH AND ESTABLISH PROTECTIVE SYSTEMS IN ACCORDANCE WITH THE IS&H MANUAL.

3.1.6 ELEVATIONS

3.1.6.1 EXCAVATION FOR FOUNDATIONS: EXCAVATE TO DEPTH SHOWN ON THE DRAWINGS. MAKE EXCAVATION WIDE ENOUGH TO PERMIT CONSTRUCTION OF FORMS AND BRACING. MAKE EXCAVATION BOTTOM COMPACT, LEVEL, TRUE AND FREE OF LOOSE MATERIAL. CORRECT OVER EXCAVATION BY EXTENDING CONCRETE DOWN TO UNDISTURBED EARTH AT TIME OF CONCRETE PLACEMENT OR BY PLACING AND COMPACTING BACKFILL AND FILL.

3.1.7 IN-SITU SOILS

3.1.7.1 IF NOT CONTAMINATED, SALVAGE EXCAVATED SOIL FOR USE AS BACKFILL AND FILL MATERIAL.

3.1.7.2 CONDUCT IN PLACE DENSITY TESTS USING NUCLEAR DENSITY GAGE. CONDUCT OPERATIONS IN MANNER THAT WILL FACILITATE TESTS.

3.1.7.3 DISPOSE OF CONTAMINATED SOIL IN ACCORDANCE WITH THE STATEMENT OF WORK.

3.2 BACKFILL AND FILL – PREPARATION

3.2.1 ALLOW CONCRETE TO CURE BEFORE PLACING BACKFILL AND FILL AGAINST CONCRETE.

3.2.2 REMOVE DEBRIS AND ORGANIC MATERIAL FROM AREA TO BE BACKFILLED OR FILLED.

3.2.3 DO NOT BACKFILL BY SLUICING OR FLOODING UNLESS WRITTEN APPROVAL IS OBTAINED FROM COMPANY.

3.2.4 PREPARE SUBGRADE IN ACCORDANCE WITH WSDOT M41-10 SECTION 2-06.3 WITH COMPACTION TO 90%. WATERING SHALL BE IN ACCORDANCE WITH SECTION 2-07 AND AS DIRECTED BY FH.

3.3 BACKFILL AND FILL

3.3.1 PLACE LOOSE LAYERS OF SPECIFIED STRUCTURAL BACKFILL AND FILL EVENLY UP SIDES OF WALL TO AVOID UNBALANCED LOADING. LIMIT EACH LAYER TO 4 INCH DEPTH.

3.3.2 COMPACT EACH LAYER UNIFORMLY TO 95% OF MAXIMUM DENSITY AS DETERMINED BY SPECIFIED COMPACTION TESTS.

3.4 BACKFILL AND FILL – UTILITY LINES

3.4.1 BEFORE LAYING UTILITY LINES, PLACE SPECIFIED BEDDING IN A 4 INCH LAYER. COMPACT LAYER UNIFORMLY TO 95% OF MAXIMUM DENSITY AS DETERMINED BY SPECIFIED COMPACTION TESTS.

3.4.2 KEEP TRENCHES FREE OF STANDING WATER DURING LAYING OF UTILITY LINES.

3.4.3 AFTER LAYING UTILITY LINES, PLACE LOOSE 8 INCH LAYERS OF SPECIFIED MATERIAL UNDER HAUNCHES, AROUND SIDES AND UP TO 12 INCHES ABOVE TOP OF UTILITY LINE. COMPACT EACH LAYER UNIFORMLY TO 95% OF MAXIMUM DENSITY AS DETERMINED BY SPECIFIED COMPACTION TESTS.

3.4.4 PLACE LOOSE 4 INCH LAYERS OF BACKFILL AND FILL IN REMAINING TRENCH DEPTH. USE SPECIFIED STRUCTURAL BACKFILL AND FILL UNDER FOUNDATIONS AND ROADS. USE SPECIFIED COMMON BACKFILL AND FILL AT OTHER LOCATIONS. COMPACT EACH LAYER UNIFORMLY TO 95% OF MAXIMUM DENSITY AS DETERMINED BY SPECIFIED COMPACTION TESTS.

3.4.5 PLACE SPECIFIED LOCATION MARKER CONTINUOUSLY AND DIRECTLY OVER BURIED UTILITY LINES AT DEPTH OF 12 INCHES BELOW FINISH GRADE.

3.4.6 PROHIBIT PASSAGE OF HEAVY CONSTRUCTION EQUIPMENT OVER BURIED UTILITY LINES UNTIL AT LEAST 24 INCHES OF BACKFILL AND FILL HAVE BEEN PLACED OVER LINES AND COMPACTED OR UNTIL BRIDGING APPROVED BY COMPANY HAS BEEN PLACED ACROSS TRENCHING.

3.5 TOP COURSE: PLACE AND COMPACT TOP COURSE IN ACCORDANCE WITH WSDOT M41-10 SECTION 4-04.1. WITH COMPACTION TO 90%.

3.6 FINISH GRADING AND STABILIZATION

3.6.1 GRADE EACH AREA DISTURBED BY WORK TO BLEND INTO EXISTING CONTOURS. SLOPE AREA TO DRAIN AWAY FROM STRUCTURES.

3.6.2 RAKE EACH AREA TO REMOVE SURFACE COBBLES LARGER THAN 6 INCHES. DISPOSE OF EXCESS MATERIAL AND DEBRIS IN ACCORDANCE WITH THE STATEMENT OF WORK.

3.6.3 STABILIZE AREA WITH A 3 INCH COURSE OF SPECIFIED STABILIZATION MATERIAL.

3.7 FIELD QUALITY CONTROL

3.7.1 COMPACTION TESTING

3.7.1.1 TEST COMPACTED TOP COURSE, BEDDING, BACKFILL, AND FILL AT THE FOLLOWING INTERVALS.

A. BEDDING: FOR EACH 250 FEET OF TRENCH OR PORTION THEREOF, 1 TEST OF EACH LAYER.

B. TOP COURSE, BACKFILL AND FILL: 1 TEST OF EACH LAYER.

3.7.1.2 PERFORM COMPACTION TESTING IN ACCORDANCE WITH THE FOLLOWING STANDARDS. PROVIDE REPORT REQUIRED BY EACH STANDARD.

A. COMPACTION CONTROL: ASTM D 1557, ASTM D 4253, OR WSDOT M 46-01

B. IN PLACE DENSITY: ASTM D 2922.

C. WATER CONTENT: ASTM D 3017.

END OF SECTION

NOTES:

1. FOR GENERAL NOTES SEE SHEET 1.

INCLUDED IN FMP FOR INSTALLATION INFORMATION

DWG NO	TITLE	REF NUMBER	TITLE
DRAWING TRACEABILITY LIST		REFERENCES	
		NEXT USED ON END USE	

REV	DESCRIPTION	DATE	CHK	APP
1	PER ECR-10-00207B PROJECT TURNOVER	10/21/10		

REVISIONS

NAME	DATE
R. MOSSBRUCKER	7/9/08
E. SCHROEDER	7/9/08
H. CHUMAN	7/9/08
C. CONSELMAN	7/9/08
GERALD HOPKINS	7/7/08

U.S. DEPARTMENT OF ENERGY
Richland Operations Office

STANDARD PUMP & TREAT CIVIL SPECIFICATION

SIZE	BLDG NO	SYS NO	SEQ NO	REV
F	1000	0200	H-1-91103	1

SCALE NONE | DWF DCN-DX-001 | SHEET 9 OF

ECR-14-000762 Page 9D

H-1-91103 REV 1

SECTION 02512

HOT-LAID ASPHALTIC CONCRETE PAVING

PART 1 – GENERAL

1.1 REFERENCES

THE FOLLOWING DOCUMENTS AND OTHERS REFERENCED THEREIN FORM PART OF CONTRACT TO EXTENT DESIGNATED IN THIS SECTION. REFERENCED DOCUMENTS ARE THOSE CURRENT AS OF THE DATE OF THIS SECTION UNLESS OTHERWISE INDICATED.

A. WASHINGTON STATE DEPARTMENT OF TRANSPORTATION (WSDOT)

M 41-10 STANDARD SPECIFICATION FOR RAOD, BRIDGE, AND MUNICIPAL CONSTRUCTION

M 46-01 MATERIALS MANUAL

1.2 SUBMITTALS

A. SEE STATEMENT OF WORK FOR SUBMITTAL PROCEDURES.

B. APPROVAL REQUIRED

1. LABORATORY REPORTS: BEFORE DELIVERY, SUBMIT TEST REPORTS DEMONSTRATING THAT ASPHALT AND MIX MEET REQUIREMENTS. FOR MIX, INCLUDE RICE DENSITY ESTABLISHED BY WSDOT M 46-01, METHOD T-209.

2. JOB MIX DESIGN: BEFORE PAVING, SUBMIT JOB MIX DESIGNS IN ACCORDANCE WITH WSDOT M 41-10, 5-04.3(7)A. INCLUDE PERCENT ASPHALT CONTENT AND AGGREGATE GRADATION.

C. APPROVAL NOT REQUIRED

1. CONPETENT PERSON: BEFORE PAVING OPERATIONS COMMENCE AND IN WRITING, SUBMIT IDENTITY OF INDIVIDUAL DESIGNATED AS COMPETENT ASPHALTIC CONCRETE PAVING INSPECTOR. PROVIDE DOCUMENTATION INDICATING CERTIFICATIONS OF QUALIFICATIONS.

1.3 QUALITY ASSURANCE

A. DELIVERABLE DOCUMENTATION: THE FOLLOWING DOCUMENTS AND RECORDS, REQUIRED BY THIS SECTION, SHALL BE DELIVERED TO COMPANY IN ACCORDANCE WITH STATEMENT OF WORK.

DOCUMENT	PARAGRAPH
TRIP TICKETS	3.1.A
TEST RESULTS	3.2.A

PART 2 – PRODUCTS

2.1 MATERIALS

A. GRANULAR BASE:
1. BASE COURSE: WSDOT M 41-10, SECTION 9-03.9(3), BASE COURSE.
2. LEVELING COURSE: WSDOT M 41-10, SECTION 9-03.9(3), TOP COURSE.

B. ASPHALT: WSDOT M 41-10, SECTION 9-02.1(4). PERFORMANCE GRADE SHALL BE PG 64-28. TEMPERTURE OF PAVING ASPHALT IN STORAGE TANKS WHEN LOADED FOR TRANSPORTING TO DESTINATION SHALL BE IN ACCORDANCE WITH WSDOT M 41-10, SECTION 9-02.3.

C. TACK COAT: WSDOT M 41-10, SECTION 9-02.1(6), GRADE CSS-1 OR CSS-1 H.

D. AGGREGATE: WSDOT M 41-10, 3/4 INCH, ESAL's: 0.3 TO < 3 MILLION, SECTION 9-03.8(1), (2), AND (3)B.

E. BLENDING SAND: WSDOT M 41-10, SECTION 9-03.8(4).

F. MINERAL FILLER: WSDOT M 41-10, SECTION 9-03.8(5).

2.2 MIXES

A. PROPORTIONING OF ASPHALT CONCRETE MATERIALS: WSDOT M 41-10, SECTION 9-03.8(6), 3/4 INCH WITH ANTI-STRIPPING ADDITIVE IN ACCORDANCE WITH M 41-10, SECTION 9-02.4, 0.5 PERCENT BY WEIGHT OF ASPHALT.

PART 3 – EXECUTION

3.1 APPLICATION

A. PERFORM WORK IN ACCORDANCE WITH THE FOLLOWING SECTIONS OF WSDOT M 41-10. DELIVER TRIP TICKETS TO COMPANY.

1. ASPHALT MIXING PLANTS: SECTION 5-04.3(1).
2. HAULING EQUIPMENT: SECTION 5-04.3(2).
3. ASPHALT PAVERS: SECTION 5-04.3(3).
4. ROLLERS: SECTION 5-04.3(4).
5. EXISTING SURFACE CONDITIONING: SECTION 5-04.3(5).
6. ASPHALT MATERIAL HEATING: SECTION 5-04.3(6).
7. AGGREGATE PREPARATION: SECTION 5-04.3(7).
8. MIXING: SECTION 5-04.3(8).
9. SPREADING AND FINISHING: SECTION 5-04.3(9).
10. COMPACTING: SECTION 5-04.3(10).
11. JOINTS: SAAW CUT AND REMOVE DAMAGED OR BROKEN EDGES OF ADJOINING ASPHALT SURFACES, WHERE REQUIRED, AND APPLY TACK COAT TO JOINT.
12. SAMPLES: SECTION5-04.3(10).
13. SURFACE: SECTION 5-04.3(13).
14. WEATHER LIMITATIONS; SECTION5-04.3(16).
15. ANTI-STRIPPING ADDITIVE: SECTION 5-04.3(20).

3.2 SUBGRADE

A. PREPARE SUBGRADE IN ACCORDANCE WITH WSDOT M 41-10, SECTION 2-08.3(1). WATERING SHALL BE IN A ACCORDANCE WITH SECTION 2-07.1 AND 2-07.3, OR AS DIRECTED BY COMPANY.

B. COMPACT SUBGRADE IN ACCORDANCE WITH WSDOT M 41-10, SECTION 2-03.3(14)C, METHOD C.

C. PLACE AND COMPACT BASE COURSE AND LEVELING COURSE IN ACCORDANCE WITH WSDOT M 41-01, SECTION 4-02.3 AND 4-04.3(5).

3.3 FIELD QUALITY CONTROL

A. TESTING OF PAVEMENT SHALL BE PERFORMED BY CONTRACTOR AND DOCUMENTED.

1. VERIFY TEMPERATURE OF THE MATERIAL IN WITHIN THE MINIMUM RANGES SPECIFIED IN THE APPROVED MIX DESIGN A MINIMUM OF EACH LOAD.

2. AT A MINIMUM OF 500 FT^2 OF PAVEMENT, VERIFY COMPACTION IN ACCORDANCE WITH WSDOT M 41-10, SECTION 5-04.3(10)B, AT 91% OF THE MAXIMUM DENSITY AS SUPPLIED INTHE APPROVED MIX DESIGN.

END OF SECTION

NOTES:

1. FOR GENERAL NOTES SEE SHEET 1.

INCLUDED IN FMP FOR INSTALLATION INFORMATION

DWG NO	TITLE
DRAWING TRACEABILITY LIST	

REF NUMBER	TITLE
REFERENCES	
NEXT USED ON END USE	

REV NO	DESCRIPTION	REV BY	REV DATE
1	PER ECR-10-002078 PROJECT TURNOVER		10/31/10

REVISIONS

NAME	DATE
R. MOSSBRUCKER	
R. SCHROEDER	
H. GHUMAN	
C. CONSELMAN	
GERALD HOPKINS	7/7/10

U.S. DEPARTMENT OF ENERGY
Richland Operations Office

STANDARD PUMP & TREAT CIVIL SPECIFICATION

SIZE	PLAN NO	SHEET NO	DWG NO	REV
F	100D	0200	H-1-91103	1

SCALE NONE | DSY DCN-DX-001 | SHEET 10 OF

ECR-14-000762 Page 91

H-1-91103 | SHEET 10 OF | REV 1

GENERAL CIRCUIT CONDUCTOR AND CONDUIT IDENTIFICATION

POWER CIRCUIT CALLOUTS

[P1]	[1/2"FLEX, 2#12,#12G]	[P31]	[1"C,3#6, 4#14,1#10G]
[P2]	[3/4"C,2#12,1#12G]	[P32]	[1"C,3#6, 5#14,1#10G]
[P3]	[3/4"C,3#12,1#12G]	[P33]	[1"C,3#4,1#8G]
[P4]	[3/4"C,4#12,1#12G]	[P34]	[1 1/4"C,3#4,3#14,1#8G]
[P5]	[3/4"C,5#12,1#12G]	[P35]	[1 1/4"C,3#4,5#14,1#8G]
[P6]	[3/4"C,6#12,1#12G]	[P38]	[1 1/4"C,3#2, 1#6G]
[P7]	[3/4"C,7#12,1#12G]	[P39]	[1 1/4"C,3#1, 1#6G]
[P8]	[3/4"C,8#12,1#12G]	[P39A]	[1 1/2"C,4#1, 1#6G]
[P9]	[3/4"C,3#12,2#14,1#12G]	[P40]	[1 1/2"C,3#1, 3#14,1#6G]
[P10]	[3/4"C,3#12,3#14,1#12G]	[P41]	[1 1/2"C,3#2/0, 1#6G]
[P11]	[3/4"C,3#12,4#14,1#12G]	[P42]	[2"C,3#3/0, 1#4G]
[P12]	[3/4"C,3#12,5#14,1#12G]	[P43]	[2"C,3#4/0, 1#2G]
[P13]	[3/4"C,3#12,6#14,1#12G]	[P43A]	[2 1/2"C,4#4/0, 1#2G]
[P14]	[3/4"C,3#12,7#14,1#12G]	[P44]	2 [2 1/2 3-250 KCM, #1/0G]
[P15]	[3/4"C,2#10,1#10G]	[P59]	[3"C, 3-500 KCMIL, 1 #2G]
[P16]	[3/4"C,3#10,1#10G]	[P60]	[4"C, 4-500 KCMIL, 1 #3/0G]
[P16A]	[3/4"C,4#10,1#10G]	[P61]	[4"C, 4-500 KCMIL, 1-500 KCMIL G]
[P17]	[3/4"C,3#10,2#14,1#10G]	[P62]	[3"C, 4-350 KCMIL, 1 #1/0G]
[P18]	[3/4"C,3#10,3#14,1#10G]	[P63]	[2"C, 4#2/0, 1 #4G]
[P19]	[3/4"C,3#10,4#14,1#10G]	[P64]	[2 1/2"C, 4#4/0, 1 #4G]
[P20]	[3/4"C,3#10,5#14,1#10G]	[P65]	[3"C, 3-350 KCMIL, 1 #3/0G]
[P21]	[1"C,2#8,1#10G]	[P66]	[3 1/2"C, 4-500 KCMIL, 1 #2G]
[P22]	[1"C,3#8,1#10G]	[P67]	[3"C, 3-400 KCMIL, 1 #2G]
[P23]	[1"C,3#8,2#14,1#10G]	[P68]	[2 1/2"C, 3-250 KCMIL, 1 #4G]
[P24]	[1"C,3#8,3#14,1#10G]	[P69]	[3"C, 4-250 KCMIL]
[P25]	[1"C,3#8,4#14,1#10G]	[P70]	[3"C, 4-250 KCMIL, 1 #1/0G]
[P26]	[1"C,3#8,5#14,1#10G]	[P71]	[4"C, 4-500 KCMIL]
[P27]	[1"C,2#6, 1#10G]	[P72]	NOT USED
[P28]	[1"C,3#6, 1#10G]	[P73]	[1 1/2"C, 3#1/0, 1#6G]
[P29]	[1"C,3#6, 2#14,1#10G]	[P74]	[3/4"C, 4#8, 1#10G]
[P30]	[1"C,3#6, 3#14,1#10G]	[P75]	[3"C, 4-300KCMIL]
		[P76]	[4"C, 4-600KCMIL, 1#1/0G]

ANALOG CIRCUIT CALLOUTS (SEE NOTE 5)

[A1]	[3/4"C,1 TYPE 3]
[A2]	[3/4"C,2 TYPE 3]
[A3]	[3/4"C,3 TYPE 3]
[A4]	[3/4"C,4 TYPE 3]
[A5]	[1"C,5 TYPE 3]
[A6]	[1"C,6 TYPE 3]
[A7]	[1"C,7 TYPE 3]
[A8]	[1 1/4"C,8 TYPE 3]
[A9]	[1 1/4"C,9 TYPE 3]
[A10]	[1 1/4"C,10 TYPE 3]
[A11]	[1 1/4"C,11 TYPE 3]
[A12]	[1 1/2 TYPE 3]
[A13]	[1 1/2"C,13 TYPE 3]
[A14]	[1 1/2"C,14 TYPE 3]
[A15]	[3/4"C,1 TYPE 4]
[A16]	[3/4"C,2 TYPE 4]
[A17]	[1"C,3 TYPE 4]
[A18]	[1 1/4"C,4 TYPE 4]
[A19]	[1 1/4"C,5 TYPE 4]
[A20]	[1 1/4"C,6 TYPE 4]
[A21]	[1 1/2"C,7 TYPE 4]
[A22]	[1 1/2"C,8 TYPE 4]
[A23]	[2"C,9 TYPE 4]
[A24]	[3/4"C,1-4 pr. TYPE 5]
[A25]	[1"C,2-4 pr. TYPE 5]

CONTROL CIRCUIT CALLOUTS

[C1]	[3/4"C,MSC]
[C2]	[3/4"C,2#18 TFFN]
[C3]	[3/4"C,3#18 TFFN]
[C4]	[3/4"C,4#18 TFFN]
[C5]	[3/4"C,5#18 TFFN]
[C6]	[3/4"C,6#18 TFFN]
[C7]	[3/4"C,7#18 TFFN]
[C8]	[3/4"C,8#18 TFFN]
[C9]	[3/4"C,9#18 TFFN]
[C10]	[3/4"C,10#18 TFFN]
[C11]	[3/4"C,11#18 TFFN]
[C12]	[3/4"C,12#18 TFFN]
[C13]	[3/4"C,13#18 TFFN]
[C14]	[3/4"C,14#18 TFFN]
[C15]	[3/4"C,15#18 TFFN]
[C16]	[3/4"C,16#18 TFFN]
[C17]	[3/4"C,17#18 TFFN]
[C18]	[3/4"C,18#18 TFFN]
[C19]	[3/4"C,19#18 TFFN]
[C20]	[1"C,20#18 TFFN]
[C21]	[1"C,21#18 TFFN]
[C22]	[1"C,22#18 TFFN]
[C23]	[1"C,23#18 TFFN]
[C24]	[1"C,24#18 TFFN]
[C25]	[1"C,25#18 TFFN]

AFD CABLE CALLOUTS

[D1]	[1"C, #12 TYPE D]	[D7]	[2"C, #1 TYPE D]
[D2]	[1"C, #10 TYPE D]	[D8]	[2 1/2"C, #1/0 TYPE D]
[D3]	[1 1/4"C, #8 TYPE D]	[D9]	[2 1/2"C, #2/0 TYPE D]
[D4]	[1 1/4"C, #6 TYPE D]	[D10]	[2 1/2"C, #3/0 TYPE D]
[D5]	[1 1/2"C, #4 TYPE D]	[D11]	[2 1/2"C, #4/0 TYPE D]
[D6]	[2"C, #2 TYPE D]		

POWER CABLE CIRCUIT CALLOUTS

[PC1]	[3/4"C,1 (3C#12,1#12G) TYPE 2]
[PC1A]	[3/4"C,1 (2C#12,1#12G) TYPE 2]
[PC2]	[3/4"C,1 (3C#10,1#10G) TYPE 2]
[PC2A]	[3/4"C,1 (2C#10,1#10G) TYPE 2]
[PC3]	[1"C,1 (3C#8,1#10G) TYPE 2]
[PC4]	[1"C,1 (3C#6,1#8G) TYPE 2]
[PC5]	[1 1/4"C,1 (3C#4,1#6G) TYPE 2]
[PC6]	[1 1/2"C,1 (3C#2,1#6G) TYPE 2]
[PC7]	[1 1/2"C,1 (3C#1,1#6G) TYPE 2]
[PC8]	[2"C,1 (3C#1/0,1#6G) TYPE 2]
[PC9]	[2"C,1 (3C#2/0,1#4G) TYPE 2]
[PC10]	[2"C,1 (3C#3/0,1#4G) TYPE 2]
[PC11]	[2 1/2"C,1 (3C#4/0,1#4G) TYPE 2]
[PC2B]	[1"C, 4#10, 1 #10G]
[PC7A]	[2"C, 4#1, 1 #6G]
[PC9A]	[2 1/2"C, 4#20, 1 #4G]

EMPTY CONDUIT

[CE-1]	[3/4"C,WITH PULL STRING]
[CE-2]	[1"C,WITH PULL STRING]
[CE-3]	[1 1/4"C,WITH PULL STRING]
[CE-4]	[1 1/2"C,WITH PULL STRING]
[CE-5]	[2"C,WITH PULL STRING]
[CE-6]	[3"C,WITH PULL STRING]
[CE-7]	[4"C,WITH PULL STRING]
[CE-8]	[5"C,WITH PULL STRING]

CONTROL CABLE CIRCUIT CALLOUTS

[CC5]	[3/4"C,1-5C TYPE 1]
[CC7]	[3/4"C,1-7C TYPE 1]
[CC9]	[1"C,1-9C TYPE 1]
[CC12]	[1"C,1-12C TYPE 1]
[CC19]	[1 1/2 ", 1-19C TYPE 1]
[CC25]	[1 1/2"C,1-25C TYPE 1]
[CC37]	[2"C,1-37C TYPE 1]
[CCC1]	[1-7C #12 TYP 1]

TYPE "W" CABLE CALLOUTS

[W28]	[1-4/C#6 TYPE W CABLE]
[W36]	[1-4/C#2 TYPE W CABLE]
[W38]	[1-4/C#1 TYPE W CABLE]
[W39]	[1-4/C#2/0 TYPE W CABLE]

TYPE "N" CABLE CALLOUTS

[N1]	[3/4"C, 1-TYPE 34]	PROFIBUS
[N1A]	[3/4"C, 2-TYPE 34]	PROFIBUS
[N2]	[3/4"C, 1-TYPE 30]	PROFINET
[N3]	[3/4"C, 2-TYPE 30]	PROFINET
[N4]	[3/4"C, 3-TYPE 30]	PROFINET
[N5]	[3/4"C, 4-TYPE 30]	PROFINET

TYPE "F" CABLE CALLOUTS

[F1]	[3/4"C, 2-MM FIBER]	PROFINET
[F2]	[3/4"C, 4-MM FIBER]	PROFINET
[F3]	[3/4"C, 6-MM FIBER]	PROFINET
[F4]	[3/4"C, 12-MM FIBER]	PROFINET

CONTROL CIRCUIT CALLOUTS

[CP2]	[3/4"C,2#14,1#14G]

NOTES:

1. FOR CABLE TYPES, SEE SPECIFICATION SGW-54028.
2. SIZING OF CONDUCTORS #2AWG AND SMALLER BASED ON CAPACITIES AT 60 DEGREES C RATING, SIZING OF CONDUCTORS #1AWG AND LARGER BASED ON CAPACITIES AT 75 DEGREES C RATING.
3. WHERE CIRCUITS ARE UNDERGROUND, DIRECT BURIED OR CONCRETE ENCASED, MINIMUM CONDUIT SIZE SHALL BE 1".
4. FOR METRIC CONDUIT SIZES USE THE FOLLOWING CONVERSION:
   1/2" = 16 mm 1 1/4" = 35 mm
   3/4" = 21 mm 1 1/2" = 41 mm
   1" = 27 mm 2" = 53 mm
5. INSTRUMENT CABLES IN THE CHEMICAL SUPPLY ROOM CABLE TRAY MAY ALSO BE TYPE 3.

DWG NO	TITLE
H-2-833526	INDEX OF DRAWINGS

DRAWING TRACEABILITY LIST — REFERENCES

REF NUMBER	TITLE	NEXT USED ON

ABBREVIATIONS-1

ABBREVIATION	DESCRIPTION
A	AMPERE, AUTOMATIC
AB SW	AIR-BREAK SWITCH
ABV	ABOVE
AC	ALTERNATING CURRENT
ACB	AIR-CIRCUIT BREAKER
ACSR	ALUMINUM CONDUCTOR STEEL-REINFORCED
ADJ	ADJUSTABLE
AF	AMPERE FRAME
AFD	ADJUSTABLE FREQUENCY DRIVE
AFF	ABOVE FINISHED FLOOR
AFG	ABOVE FINISHED GRADE
AHM	AMPERE-HOUR METER
AHU	AIR HANDLING UNIT
AL	ALUMINUM
AM	AMMETER
AMPL	AMPLIFIER
ANN	ANNUNCIATOR
ANT	ANTENNA
APPROX	APPROXIMATE
AS	AMMETER SWITCH, AMPERE SENSOR
ASC	AUXILIARY SWITCH NORMALLY CLOSED
ASO	AUXILIARY SWITCH NORMALLY OPEN
ASU	AIR SUPPLY UNIT
ATC	AUTOMATIC TRANSFER CONTROL
AT	AMPERE TRIP
ATS	AUTOMATIC TRANSFER SWITCH
AUTO	AUTOMATIC
AUX	AUXILIARY
AWG	AMERICAN WIRE GAGE
BAT	BATTERY
BC	BARE COPPER
BIL	BASIC IMPULSE LEVEL
BKR	BREAKER
BLDG	BUILDING
BOT	BOTTOM
C	CONDUIT, CLOSE, CELSIUS
CB	CIRCUIT BREAKER
CC	CONTROL CABLE
CCS	CENTRAL CONTROL SYSTEM
CKT	CIRCUIT
CLF	CURRENT LIMITING FUSE
CLG	CEILING
COM	COMMUNICATIONS
CONN DIAG	CONNECTION DIAGRAM
CONT	CONTINUE
CP	CONTROL PANEL
CPT	CONTROL POWER TRANSFORMER
CPU	CENTRAL PROCESSING UNIT
CR	CONTROL RELAY
CS	CONTROL STATION:C=CLOSE, T=TRIP
CT	CURRENT TRANSFORMER, CABLE TRAY
CU	COPPER
DC	DIRECT CURRENT
DCP	DISTRIBUTED CONTROL PANEL
DCS	DISTRIBUTED CONTROL SYSTEM
DIV	DIVISION
DN	DOWN
DP	DISTRIBUTION PANEL
DPDT	DOUBLE-POLE DOUBLE-THROW
DPST	DOUBLE-POLE SINGLE-THROW
DS	DISCONNECT SWITCH
E	EMPTY
EA	EACH
EDH	ELECTRIC DUCT HEATER
EF	EXHAUST FAN
EG	ENGINE GENERATOR
EL	ELEVATION
ELEC	ELECTRIC
ELEM	ELEMENTARY
EMER	EMERGENCY
EMS	ENERGY MONITORING SYSTEM
EMT	ELECTRICAL METALLIC TUBING
EMU	ENERGY MONITORING UNIT
ENCL	ENCLOSURE
EP	EXPLOSION-PROOF
EQPT	EQUIPMENT
ETM	ELAPSED TIME METER
EUH	ELECTRIC UNIT HEATER
EXH	EXHAUST
EXST	EXISTING
F	FORWARD, FREQ
FA	FIRE ALARM
FACP	FIRE ALARM CONTROL PANEL
FDR	FEEDER
FU	FUSE
FF	FINISHED FLOOR
FI	FLOW INDICATOR
FLEX	FLEXIBLE CONDUIT
FLR	FLOOR
FLUOR	FLUORESCENT
FPR	FEEDER PROTECTOR RELAY
FO	FIBER OPTIC
FP	FIELD PANEL
FREQ	FREQUENCY
FS	FLOAT SWITCH
FT	FLOW TRANSMITTER
FU	FUSE
FVNR	FULL VOLTAGE NON-REVERSING
FVR	FULL VOLTAGE REVERSING
FWD	FORWARD
G	GROUND
GALV	GALVANIZED
GEN	GENERATOR
GFCI	GROUND FAULT CIRCUIT INTERRUPTER
GFE	GOVERNMENT FURNISHED EQUIPMENT
GFR	GROUND FAULT RELAY
GND	GROUND
GPR	GENERATOR PROTECTOR RELAY
GRS	GALVANIZED RIGID STEEL CONDUIT
H	HIGH SPEED
HGT	HEIGHT
HH	HANDHOLE
HID	HIGH INTENSITY DISCHARGE
HMI	HUMAN-MACHINE INTERFACE
HOA	HAND-OFF-AUTO
HOR	HAND-OFF-REMOTE
HP	HORSEPOWER
HPS	HIGH PRESSURE SODIUM
HS	HAND SWITCH
HV	HIGH VOLTAGE
HVAC	HEATING, VENTILATING & AIR CONDITIONING
HZ	HERTZ
IBC	INSULATED BUSHING CAP, INTERNATIONAL BUILDING CODE
IC	INTERRUPTING CAPACITY
I & C	INSTRUMENTATION AND CONTROL
IMC	INTERMEDIATE METALLIC CONDUIT
INCAND	INCANDESCENT
INST	INSTANTANEOUS
INT	INTERRUPTING
ISR	INTRINSICALLY SAFE RELAY
J,JB	JUNCTION BOX
K	KEY INTERLOCK
KA	KILOAMPERES
KAIC	KILOAMPERES INTERRUPTING CAPACITY
KCM	THOUSAND CIRCULAR MILS
KV	KILOVOLTS
KVA	KILOVOLT AMPERES
KW	KILOWATTS
KWH	KILOWATT HOURS
KWHD	KILOWATT HOURS DEMAND
L	LIGHTING CONTACTOR, LOW SPEED, LOWER
LA	LIGHTING ARRESTOR
LC	LIGHTING CONTROLLER, LATCH COIL
LCP	LOCAL CONTROL PANEL
LE	LEVEL ELEMENT
LIT	LEVEL INDICATING TRANSMITTER
LOR	LOCAL-OFF-REMOTE
LP	LIGHTING PANEL
LPS	LOW PRESSURE SODIUM
LR	LOCAL/REMOTE
LS	LIMIT SWITCH, LEVEL SWITCH
LT	LEVEL TRANSMITTER, LIGHTING TRANSFORMER
LT FLEX	LIQUID-TIGHT FLEX CONDUIT
LTS	LIGHTS
M	MAGNETIC CONTACTOR COIL, MOTOR, MANUAL
MA	MILLIAMPERE
MAN	MANUAL
MAU	MAKE-UP AIR UNIT
MAX	MAXIMUM
MCC	MOTOR CONTROL CENTER
MDC	MOTORIZED DAMPER CONTROL
MECH	MECHANICAL
MFR	MANUFACTURER
MH	MANHOLE, METAL HALIDE, MOUNTING HEIGHT
MIN	MINIMUM
MO	MOTOR OPERATOR
MOP	MOTOR OPERATED POTENTIOMETER
MOV	METAL OXIDE VERISTOR, MOTOR OPERATED VALVE
MPR	MOTOR PROTECTION RELAY
MRCT	MULTI RATIO CURRENT TRANSFORMER
MS	MOTOR STARTER
MSC	MANUFACTURER SUPPLIED CABLE
MT	MOUNT
MTD	MOUNTED
MTS	MANUAL TRANSFER SWITCH
MV	MEDIUM VOLTAGE
MVA	MEGA-VOLT AMPERES
N	NEUTRAL, NORMAL
NA	NON-AUTOMATIC
NC	NORMALLY CLOSED
NEUT	NEUTRAL
NIC	NOT IN CONTRACT
N.O.	NORMALLY OPEN
NP	NAMEPLATE
NTS	NOT TO SCALE
O	OPEN
OCA	OPEN-CLOSE-AUTO
OCB	OIL CIRCUIT BREAKER
OCR	OVERCURRENT RELAY
OH	OVERHEAD
OHM	OHMMETER
OL	OVERLOAD RELAY
OO	ON-OFF
OOA	ON-OFF-AUTO
OOR	ON-OFF-REMOTE
OS	OCCUPANCY SENSOR
P	PRIMARY
PB	PULL BOX
PC	PHOTOCELL
PCC	POINT OF COMMON COUPLING
PCB	POWER CIRCUIT BREAKER
PF	POWER FACTOR
PH	PHASE
PLC	PROGRAMMABLE LOGIC CONTROLLER
PNL	PANEL
POT	POTENTIOMETER
PP	POWER PANEL
PS	PRESSURE SWITCH
PT	POTENTIAL TRANSFORMER
PVC	POLYVINYL CHLORIDE
PWR	POWER
R	RELAY,REVERSE,RUN,RAISE
RCPT	RECEPTACLE
REF	REFERENCE
REM	REMOTE
RFAR	RADIO FIRE ALARM REPORTER
RGS	RIGID GALVANIZED STEEL CONDUIT
RIO	REMOTE INPUT/OUTPUT
RMS	ROOT MEAN SQUARE
RPM	REVOLUTIONS PER MINUTE
RTU	REMOTE TELEMETRY UNIT
RTD	RESISTANCE TEMPERATURE DETECTOR
RVNR	REDUCED VOLTAGE NON-REVERSING
RVR	REDUCED VOLTAGE REVERSING
S	SECONDARY
SA	SURGE ARRESTER
SC	SPEED CONTROL
SCADA	SUPERVISORY CONTROL AND DATA ACQUITION SYSTEM
SCCR	SHORT CIRCUIT CURRENT RATING
SCU	SPEED CONTROL UNIT
SF	SUPPLY FAN
SH	SPACE HEATER
S/N	SOLID NEUTRAL
SOL	SOLENOID
SP	SPARE
SPD	SPEED
SS	START STOP
SST	STAINLESS STEEL
ST	SHUNT TRIP
SUB	SUBSTATION
SV	SOLENOID VALVE
SW	SWITCH
SWBD	SWITCHBOARD
SWGR	SWITCHGEAR
SYMM	SYMMETRICAL
T	THERMOSTAT, TRANSFORMER
TB	TERMINAL BOARD, TEST BLOCK
TD	TEMPERATURE DETECTOR, TIME DELAY
TDC	TIME-DELAY CLOSING
TDO	TIME-DELAY OPENING
TDR	TIME DELAY RELAY
TEL	TELEPHONE
TEMP	TEMPERATURE
TJB	TERMINAL JUNCTION BOX
TSP	TWISTED SHIELDED PAIR
TST	TWISTED SHIELDED TRIAD
TVSS	TRANSIENT VOLTAGE SURGE SUPPRESSOR
TYP	TYPICAL
UC	UNLATCH COIL
UH	UNIT HEATER
UNO	UNLESS NOTED OTHERWISE
UPS	UNINTERRUPTIBLE POWER SUPPLY
UVR	UNDER VOLTAGE RELAY
V	VOLTAGE, VOLTS
VCB	VACUUM CIRCUIT BREAKER
VFD	VARIABLE FREQUENCY DRIVE
VIB	VIBRATION
VM	VOLTMETER
VR	VOLTAGE REGULATOR
VS	VOLTMETER SWITCH
W	WATTS
WHD	WATT HOUR DEMAND METER
WM	WATTMETER
WP	WEATHERPROOF
XD	TRANSDUCER
XFMR	TRANSFORMER
XPDR	TRANSPONDER
Z	IMPEDANCE
ZS	POSITION SWITCH

INCLUDED IN FMP FOR INSTALLATION INFORMATION

GENERAL NOTE:

1. THIS IS A STANDARD LEGEND SHEET. THEREFORE, NOT ALL OF THE INFORMATION SHOWN MAY BE USED ON THIS PROJECT.
2. WHEN A CONFLICT BETWEEN THIS LEGEND SHEET AND OTHER LEGEND SHEET EXIST, THIS LEGEND SHEET SHALL TAKE PRECEDENCE FOR ELECTRICAL WORK
3. SEE INSTRUMENTATION AND CONTROL LEGENDS FOR INSTRUMENT ABBREVIATIONS

REV	DESCRIPTION	ERW			
12	REVISED PER ECR-12-001365 ECR-12-001366	10/29/14			
11	REVISED PER ECR-13-000787	SLR 1/2/14		GGB 1/7/14	RBR 1/7/14

REVISIONS

NAME	DATE	COMPANY
DRAWN BY L WALTER AJ FOR LW	2/18/14	SH
DSGN BY T JAMES	2/18/14	SH
ENG E ELLIS	2/18/14	SH
PROJ ENGR B SASSER	2/18/14	CHPRC
DESIGN AUTHORITY G EDWARDS	2/23/14	CHPRC

U.S. DEPARTMENT OF ENERGY
Richland Operations Office

TITLE: GENERAL ELECTRICAL LEGEND

SIZE	BLDG NO	INDEX NO	DWG NO	REV
D	200W	9902	H-2-833533	12

SCALE AS NOTED DCN-200W-001 SHEET 3 OF

XXXX PLOTID XXXX

ECR-14-000762 Page 9a

INSTRUMENT IDENTIFICATION

EXAMPLE SYMBOLS (SEE NOTE 6)

CL2
X
Y 1 A 1 A (X)

- EQUIPMENT ID OR ISA INSTRUMENT ID
- SEE ABBREVIATIONS AND LETTER SYMBOLS
- TOTAL NUMBER OF UNITS
- MULTIPLE COMPONENT ID
- COMPONENT ID (CONSECUTIVE NUMBERING)
- ASSEMBLY ID
- SYSTEM IDENTIFICATION NO. (SEE I & C LEGEND H-2-833534 SHEET 3)
- FACILITY ID

INSTRUMENT LOCATION SYMBOLS

AIT (CHLORINE) — FIELD MOUNTED INSTRUMENT

FY (I/P) — REAR-OF-PANEL MOUNTED INSTRUMENT

FIC — PANEL MOUNTED INSTRUMFNT

YL (00) — MOTOR CONTROL CENTER MOUNTED INSTRUMENT

TE — REAR-OF-MCC MOUNTED INSTRUMENT OR INSTRUMENT INTEGRAL TO MOTOR

SCADA AND PLC SYMBOLS

PAH — SCADA FUNCTION, REFER TO ISA TABLE

SP — SEE COMPUTATION IDENTIFIERS

PC — PLC FUNCTION, REFER TO ISA TABLE

USER DEFINED ISA IDENTIFICATIONS

YYN LATCHING INTERLOCK
YY NON-LATCHING INTERLOCK

COMPUTATION IDENTIFIERS

SP	SETPOINT
Δ	DIFFERENCE
Σ	SUMMATION
×	MULTIPLICATION
MAX	MAXIMUM LIMIT
MIN	MINIMUM LIMIT
SEL	SELECTOR
RST	RESET

BOOLEAN

AND
OR
NOT
I — INTERLOCK FUNCTION

ARITHMETIC

SUM, Σ
ADD
X — MULTIPLY
> — HIGH SELECT

ISA SYMBOLOGY TABLE

LETTER	FIRST-LETTER: PROCESS OR INITIATING VARIABLE	FIRST-LETTER: MODIFIER	SUCCEEDING-LETTERS: READOUT OR PASSIVE FUNCTION	SUCCEEDING-LETTERS: OUTPUT FUNCTION	SUCCEEDING-LETTERS: MODIFIER
A	ANALYSIS (+)		ALARM		
B	BURNER, COMBUSTION		USER'S CHOICE (+)	USER'S CHOICE (+)	USER'S CHOICE (+)
C	USER'S CHOICE (+)			CONTROL	
D	DENSITY (S.G)	DIFFERENTIAL			
E	VOLTAGE		PRIMARY ELEMENT		
F	FLOW RATE	RATIO			
G	USER'S CHOICE (+)		GLASS, GAUGE VIEWING DEVICE		
H	HAND (MANUAL)				HIGH
I	CURRENT (ELECTRICAL)		INDICATE		
J	POWER	SCAN			
K	TIME, TIME SCHEDULE	TIME RATE OF CHANGE		CONTROL STATION	
L	LEVEL		LIGHT (PILOT)		LOW
M	MOTION	MOMENTARY			MIDDLE
N	TORQUE OR LEAK		USER'S CHOICE (+)	USER'S CHOICE (+)	USER'S CHOICE (+)
O	USER'S CHOICE (+)		ORIFICE, RESTRICTION		
P	PRESSURE, VACUUM		POINT (TEST) CONNECTION		
Q	QUANTITY	INTEGRATE			
R	RADIATION		RECORD OR PRINT	RATE	
S	SPEED, FREQUENCY	SAFETY		SWITCH	
T	TEMPERATURE			TRANSMIT	
U	MULTIVARIABLE (+)		MULTIFUNCTION (+)	MULTIFUNCTION (+)	MULTIFUNCTION (+)
V	VIBRATION, MECHANICAL ANALYSIS			VALVE, DAMPER, LOUVER	
W	WEIGHT, FORCE		WELL		
X	UNCLASSIFIED (+)	X AXIS	UNCLASSIFIED (+)	UNCLASSIFIED (+)	UNCLASSIFIED (+)
Y	EVENT, STATE OR PRESENCE	Y AXIS		RELAY, COMPUTE, CONVERT	
Z	POSITION	Z AXIS		DRIVE, ACTUATOR, UNCLASSIFIED FINAL CONTROL ELEMENT	

(+) WHEN USED, EXPLANATION IS SHOWN UNDER SCADA AND PLC SYMBOLS LEGEND.

INTERFACE SYMBOLS

L | D
N | D
S | L
S | N

[ ] = PROCESS INTERFACE
( ) = SIGNAL INTERFACE
S = SOURCE DRAWING NUMBER
L = PROCESS INTERFACE LETTER
N = SIGNAL INTERFACE NUMBER
D = DESTINATION DRAWING NUMBER

(N) PROCESS OR SIGNAL LINE CONTINUATION N=1,2,3,ETC (N)

INTERFACE TO OR FROM PROCESS EXTERNAL TO PROJECT, OR NO DRAWING REFERENCE, OR MULTIPLE DRAWING REFERENCES

DIGITAL SYSTEM INTERFACES

▲ ANALOG INPUT
▼ ANALOG OUTPUT
△ DISCRETE INPUT
▽ DISCRETE OUTPUT
D-NET DEVICE NET INTERFACE

LINE LEGEND

- MAIN PROCESS PIPE
- SECONDARY PROCESS PIPE
- OTHER PROCESS PIPE
- PROCESS (OPEN CHANNEL)
- ANALOG SIGNAL (4 TO 20 mAdc)
- DATA/SOFTWARE LINK
- DISCRETE SIGNAL (ON/OFF, ETC.)
- FO — FIBER OPTIC CABLE
- XXX — FILLED SYSTEM SIGNAL
- HT — HEAT TRACE
- L L L — HYDRAULIC SYSTEM SIGNAL
- PNEUMATIC SIGNAL
- PACKAGE SYSTEM BOUNDARY
- BUILDING, FACILITY OR PROCESS BOUNDARY
- DUPLICATE EQUIPMENT OR SYSTEMS
- CONNECTING LINES
- NON-CONNECTING LINES

--X---X--
X : DENOTES NETWORK PROTOCOL
D = DEVICENET
E = ETHERNET
P = PROFIBUS

WIRE COLOR CODES

BLACK IN INSTRUMENT CABLE	+24VDC SIGNALS
WHITE OR CLEAR IN INSTRUMENT CABLE	-24VDC SIGNAL
BLUE (LOOSE WIRE)	24VDC POWER DISTRIBUTION
PURPLE (LOOSE WIRE)	PLC/RIO DIGITAL OUTPUTS
PINK (LOOSE WIRE)	PLC/RIO DIGITAL INPUTS
GREEN	GROUND, PROTECTIVE/POWER GND
GREEN/YELLOW STRIPE	ISOLATED INSTRUMENT GROUND
LIGHT BLUE	INTRINSICALLY SAFE CIRCUITS

EQUIPMENT ACRONYM LEGEND

X-YYY
X: DENOTES IDENTIFIER (SHOWN BELOW)
Y: SYSTEM IDENTIFICATION NO.

SELF-CONTAINED VALVE IDENTIFIERS:

ARV- AIR RELEASE VALVE
AVRV- AIR AND VACUUM RELEASE VALVE
CARV- COMBINATION AIR RELIEF VALVE
PCV- PRESSURE CONTROL VALVE
PRV- PRESSURE RELEASE VALVE
VRV- VACUUM RELEASE VALVE

EQUIPMENT IDENTIFIERS:

ABC- AERATION BRIDGE CRANE
ACHT- AERATED CENTRATE HOLDING TANK
AEF- AIR STRIPPER EXHAUST FAN
AFD- ADJUSTABLE FREQUENCY DRIVE
AGP- AIR GAP PUMP
AMB- AERATION MEMBRANE BLOWER
AMT- AERATION MEMBRANE TANK
AMTS- AERATION MEMBRANE FILTRATION SYSTEM
AMTSS- AERATION MEMBRANE TANK SPLITTER STRUCTURE
ANS- ACID NEUTRALIZATION SYSTEM
AP- AERATION MEMBRANE PERMEATE PUMP
AP- ALARM PANEL
AS- AIR STRIPPER UNIT
ASC- AERATION SPLITTER COMPRESSOR
ASEP- AIR STRIPPER EFFLUENT PUMP
ASHT- AERATED SLUDGE HOLDING TANK
ASP- ANTI-SCALANT CHEMICAL FEED PUMP
AST- AIR STRIPPER TANK
BCU- BLOWER COOLING UNIT
BDD- BACK DRAFT DAMPER
BF- BAG FILTER
BPDP- BIO PROCESS DRAIN PUMP
BSP- BACKWASH SUPPLY PUMP
CAP- CITRIC ACID FEED PUMP
CASP- CHEMICAL AREA SUMP PUMP
CC- CALIBRATION COLUMN
CD- CONDENSATE DRAIN
CF- CARTRIDGE FILTER
CFP- CENTRIFUGE FEED PUMP
CH- CENTRIFUGE HOIST
CP- CONTROL PANEL
CPSP- CATIONIC POLYMER SUMP PUMP
CRP- CARBON RETURN PUMP
CS- CONTROL STATION
CSEP- CENTRALIZED SYSTEM EFFLUENT PUMP
CSF- CHEMICAL SCRUBBER FAN
CSIP- CENTRALIZED SYSTEM INFLUENT PUMP
CSP- CARBON SUBSTRATE FEED PUMP
CSRP- CARBON SUBSTRATE RECIRCULATION PUMP
CSSP- CARBON SUBSTRATE SUMP PUMP
CST- CARBON SUBSTRATE TANK
CT- CARBON SEPARATOR
CUSP- CARBON UNLOADING AREA SUMP PUMP

EQUIPMENT IDENTIFIERS (CONTINUED)

DC- CENTRIFUGE
DD- DESICCANT DRYER
DH- DEHUMIDIFICATION HEATER
DPC- DISTRIBUTED PROCESS CONTROL
DRV- DUCT RELIEF VALVE
DT- DIRT TRAP
E- EDUCTOR
EMWP- EDUCTOR MOTIVE WATER PUMP
EFT- EFFLUENT TANK
ET- EQUALIZATION TANK
ETSP- EXTRACTION TRANSFER SUMP PUMP
ETP- EXTRACTION TRANSFER PUMP
ETT- EXTRACTION TRANSFER STORAGE TANK
FES- FINAL EFFLUENT SAMPLER
FBR- FLUIDIZED BED REACTOR
FBRP- FLUIDIZED BED REACTOR INFLUENT PUMP
FCFP- FERRIC CHLORIDE FEED PUMP
FIBC- FLEXIBLE INTERMEDIATE BULK CONTAINER
FIL- FILTER
FP- FLUIDIZATION PUMP
FR- FILTER REGULATOR
FSP- SOLIDS RECYCLE PUMP
FT- FLUIDIZED BED REACTOR
FTM- FLOCCULATION TANK MIXER
FUH- FIBC UNLOADING HOPPER
G- GATE
HT- HYDROPNEUMATIC TANK
HTB- HOLDING TANK BLOWER
IAC- INSTRUMENT AIR COMPRESSOR
IAD- DESICCANT AIR DRYER
IAF- PRIMARY COALESCING FILTER
IAR- COMPRESSED AIR RECEIVER
IBP- INJECTION BOOSTER PUMP
ITP- INJECTION TRANSFER STORAGE PUMP
ITT- INJECTION TRANSFER STORAGE TANK
KOV- KNOCKOUT VESSEL
LCF- LIME CONVEYOR FAN
LF- LIME FEEDER
LSM- LIME/SCRUBBER MIXER
LSS- LIME STORAGE SILO
MH- MANHOLE
MNP- MICRONUTRIENT FEED PUMP
OBF- OFF GAS BOOSTER FAN
OGD- OFF GAS DEMISTER
OSP- ODOR STACK SAMPLE PUMP
PAP- PHOSPHORIC ACID FEED PUMP
PBU- POLYMER BLENDING UNIT
PD- PULSATION DAMPENER
PFP- POLYMER FEED PUMP
PLC- PROGRAMMABLE LOGIC CONTROLLER

EQUIPMENT IDENTIFIERS (CONTINUED)

RBSP- RAD BUILDING SUMP PUMP
RCYT- RECYCLE TANK
RDP- RESIN DELIVERY PUMP
RDT- ROTARY DRUM THICKENER
RHT- RESIN HOLDING TANK
RIO- REMOTE I/O PANEL
RP- AIR STRIPPER CHEMICAL RECIRCULATION PUMP
RSP- RETURN ACTIVATED SLUDGE (RAS) PUMP
RST- TC-99 RESIN STRIP TANK
RT- RESIN TRAP
SAC- RAD BUILDING AIR COMPRESSOR SYSTEM
SAP- SULFURIC ACID FEED PUMP
SASP- SULFURIC ACID SUMP PUMP
SBA- SILO BIN ACTIVATOR
SBP- SODIUM BISULFITE FEED PUMP
SC- SCREW CONVEYOR
SFAT- SULFURIC ACID TANK
SG- SIGHT GLASS
SHCP- SODIUM HYPOCHLORITE FEED PUMP
SHDP- SODIUM HYDROXIDE PUMP
SM- STATIC MIXER
SNP- SODIUM NITRATE FEED PUMP
SRP- SLUDGE RETURN PUMP
ST- STORAGE TANK
STB- STRIP TANK BLOWER
STH- STRIP TANK HEATER
STP- STRIP TANK RECIRCULATION PUMP
STR- STRAINER
SWP- SPRAY WATER BOOSTER PUMP
TCISP- TC-99 INLET SUPPLY PUMP
TCSIT- TC-99 SYSTEM INLET TANK
TC- TECHNETIUM COLUMN
TDP- TRENCH DRAIN PUMP
TDRP- TRENCH DRAIN RETURN PUMP
TH- THICKENER HOIST
TOG- TREATED OFF GAS FAN
TSP- THICKENED SLUDGE PUMP
TST- THICKENED SLUDGE TANK
TWFP- TREATED WATER FEED PUMP
TWP- TREATED WATER SUPPLY PUMP
TWT- TREATED WATER SUPPLY TANK
UC- URANIUM COLUMN
UISP- URANIUM INLET SUPPLY PUMP
USIT- URANIUM SYSTEM INLET TANK
UVR- ULTRA-VIOLET REACTOR
VC- VENT CONDENSER
VES- EXCHANGEABLE VAPOR ROLL-OFF
VGF- VAPOR OFF GAS FAN
VGT- VPGAC DRUM
WFT- FLOCCULATION TANK
WP- EXTRACTION WELL PUMP
WSP- WASTE ACTIVATED SLUDGE PUMP

TRANSDUCERS

A	ANALOG	I	CURRENT
D	DIGITAL	P	PNEUMATIC
E	VOLTAGE	PF	PULSE FREQUENCY
F	FREQUENCY	PD	PULSE DURATION
H	HYDRAULIC	R	RESISTANCE

EXAMPLE:

PIT Y62A — PRESSURE INDICATING TRANSMITTER FIELD INSTRUMENT

GENERAL NOTES:

1. COMPONENTS AND PANELS SHOWN WITH A SINGLE ASTERISK ( )* ARE TO BE PROVIDED AS PART OF A PACKAGE SYSTEM.
2. THIS IS A STANDARD LEGEND. THEREFORE, ALL OF THIS INFORMATION MAY NOT BE USED ON THIS PROJECT.
3. THIS LEGEND APPLIES TO PROCESS AND INSTRUMENTATION DIAGRAMS AND PROCESS FLOW DIAGRAMS.
4. FOR FLOW STREAM IDENTIFICATION, SEE THE MECHANICAL LEGEND SHEET H-2-833529-1.
5. SCREENING DENOTES ITEMS NOT IN THIS CONTRACT.
6. INSTRUMENT IDENTIFICATION NUMBERS HAVE A DASH (-) AFTER THE EQUIPMENT ID, OR ISA INSTRUMENT ID, IN THE BUBBLE SYMBOL. THIS DASH DOES NOT APPEAR, BUT IS UNDERSTOOD AND IS NEXT TO INSTRUMENT SYMBOL (I.E. CL2, DO, pH).
7. SEE DWG H-2-833526-2 AND H-2-833526-3 FOR ABBREVIATIONS.
8. SEE VALVE SCHEDULE DRAWINGS H-2-833529 FOR VALVE SETTINGS.
9. ITEMS DEPICTED IN GRAYSCALE (PIXILATED) ARE BACKGROUND INFORMATION OR INDICATE SPACE FOR FUTURE INSTALLATION.

INCLUDED IN FMP FOR INSTALLATION INFORMATION

ECR-14-000762 Page 93

REV NO	DESCRIPTION	REV BY DATE			
5	REVISED PER ECR-14-000683	GEM 7/21/14			
4	REVISED PER DCN-200W-321	CAB 7/11/12		BLS 7/11/12	SW 7/12/12
3	REVISED PER DCN-200W-196	KLA 7/15/11		SC 7/28/11	GVD 7/28/11

REVISIONS

REF NUMBER	TITLE
H-2-833526	INDEX OF DRAWINGS

REFERENCES — NEXT USED ON

DWG NO — TITLE — DRAWING TRACEABILITY LIST

	NAME	DATE	COMPANY
DESIGN BY	E KRISTEL	6/17/10	CH
DRAWN BY	G DAVIS	6/17/10	CH
ENG	G DAVIS	6/17/10	CH
PROJ ENG	BL SASSER	6/22/10	CHPRC
CHECKER	R HANKS HDY FOR RH	6/17/10	CH
DESIGN AUTHORITY	RAMBO	6/23/10	CHPRC

U.S. DEPARTMENT OF ENERGY
Richland Operations Office

TITLE: GENERAL I&C LEGEND

SIZE	BLDG NO	INDEX NO	DWG NO	REV
D	200W	9903	H-2-833534	5

SCALE NONE — EDT DCN-200W-030 — SHEET 1 OF 3

XXXX PLOTID XXXX

DOE_TB_D.DWG (01-01)

DWG NO H-2-833534 SH 1 OF 3 REV 5

VALVE SYMBOLS

- GATE
- KNIFE GATE
- BUTTERFLY
- GLOBE
- BALL
- VEE- BALL
- PLUG
- SEAT PORT ECCENTRIC PLUG
- DIAPHRAGM
- PINCH
- NEEDLE
- SWING CHECK
- BALL CHECK
- BLADDER CHECK
- DUCK BILL CHECK
- ROTARY
- SPEC SEGMENTS
- STEEL BELLOWS
- BACKFIRE
- BACKFLOW PREVENTER
- INLINE LOCKOUT VALVE (EXH)
- 120V AUTO DRAIN VALVE
- PRESSURE RELIEF
- AIR AND/OR VACUUM RELEASE
- REGULATED SIDE PRESSURE CONTROL
- PRESSURE CONTROL VALVE
- PRESSURE REGULATING VALVE
- ANGLE GATE VALVE
- ANGLE GLOBE VALVE
- 3-WAY VALVE
- MULTI-PORT VALVE (BALL VALVE SHOWN. FOR OTHER VALVE TYPES, APPROPRIATE VALVE SYMBOL SHOWN). ARROWS INDICATE FLOW PATTERN. SEAT PORTS ARE IMPLIED BY INDICATED FLOW PATTERN.
- SAMPLE VALVE
- MUD VALVE
- TELESCOPING

GATE SYMBOLS

- SLUICE
- BUTTERFLY
- FLAP
- FABRICATED SLIDE
- STOP LOG
- SHEAR

PRIMARY ELEMENT SYMBOLS

- PARSHALL FLUME
- WEIR
- ORFICE PLATE
- FLOW TUBE
- PITOT-STATIC
- VORTEX METER
- LEVEL (BUBBLER TUBE)
- THERMAL METER
- ROTARY GEAR METER
- RADAR LEVEL
- NS LEAK DETECTOR
- ULTRASONIC FLOWMETER
- ELECTROMAGNETIC FLOWMETER
- PROPELLER OR TURBINE METER
- DE DENSITY METER (X: N = NUCLEAR, O = OPTICAL, U = ULTRASONIC)
- LE LEVEL (ULTRASONIC)
- LS LEVEL (FLOAT)
- ROTAMETER
- ORIFICE PLATE
- PSE RUPTURE DISK WITH DETECTION

MISCELLANEOUS SYMBOLS

- INJECTION QUILL ASSY
- SIGHT GLASS
- VENT TO ATMOSPHERE
- IGNITER
- DIAPHRAGM SEAL
- ANNULAR DIAPHRAGM SEAL
- FILTER / STRAINER
- FINE BUBBLE AIR DIFFUSER
- DRIP TRAP / RESIN TRAP
- AUTOMATIC DRIP TRAP
- COARSE BUBBLE DIFFUSER
- INLINE FILTER SILENCER
- PIG CATCH
- MIXING AIR DIFFUSER
- VOICE COMMUNICATION POINT
- BLIND FLANGE
- INLINE SILENCER
- SEDIMENT TRAP
- AERATOR
- TANK AIR RECEIVER
- FLEXIBLE PIPE CONNECTION
- HOSE FLEXIBLE PIPE
- PLUG — REVISED DCN-200W-279 (TYP)
- GRINDER
- QUICK CONNECT
- CONDENSATE TRAP
- LCP-XXX — PANEL CONTINUED ON SAME OR OTHER DRAWING; PANEL OUTLINE; PANEL NAME
- POLYMER BLENDING UNIT
- RUPTURE DISK
- CALIBRATION COLUMN
- EXPANSION CHAMBER
- PIPE CAP
- AMMONIA TAPE HEATER
- SS COMPOSITE SAMPLE SUCTION
- AIR GAP
- FLAME TRAP
- MIXER
- TANK MIXER
- TANK MIXER PROPELLER
- STATIC MIXER
- ELECTRIC MOTOR
- STRAINER
- BASKET STRAINER
- CONCENTRIC REDUCER
- ECCENTRIC REDUCER
- BUSHING
- PILOT LIGHT
- PULSATION DAMPENER
- SCREW
- DAMPER
- ZS DUCT RELIEF VALVE
- THERMOWELL
- TP TRAP PRIMER
- UNION
- 120V 120 VOLT, 60 HZ POWER
- 480V 480 VOLT, 60 HZ POWER
- S SEAL WATER SET
- F FLUSHING CONNECTION
- HOSE ADAPTOR
- PLUG
- RECEPTACLE
- HOSE BIB
- A SELF CONTAINED AIR SUPPLY
- SD COMPOSITE SAMPLER (DIPPER TYPE)
- SS COMPOSITE SAMPLER (SUCTION TYPE)
- OR CONTROL DIAGRAMS
- XP PURGE SET X: W = WATER, A = AIR — SEE
- XX AIR SET XX = SUPPLY PRESSURE IN PSIG
- FILTER/REGULATOR/GAUGE SET
- M HOIST
- DESICCANT DRYER
- ELECTRIC IMMERSION HEATER
- DW SW TRANSITION FROM SINGLE WALL (SW) TO DOUBLE WALL (DW) WITH SECONDARY CONTAINMENT DRAIN (CAPPED)

PUMP AND COMPRESSOR SYMBOLS

NOTE:
XX: AS ADJUSTABLE SPEED
CS CONSTANT SPEED (SINGLE SPEED)
CS-2 CONSTANT SPEED (TWO SPEED)

- CENTRIFUGAL PUMP (DRY PIT)
- CENTRIFUGAL WET PIT PUMP
- PROGRESSIVE CAVITY PUMP
- GEAR PUMP / BLOWER
- COMPRESSOR PISTON
- ROTARY SCREW COMPRESSOR
- CHEMICAL FEED PUMP
- DIAPHRAGM PUMP
- PISTON PUMP
- EJECTOR / EDUCTOR
- PNEUMATIC PUMP
- PERISTALTIC PUMP
- SCREW PUMP
- CENTRIFUGAL WET PIT PUMP
- VERTICAL TURBINE WET PIT PUMP
- TURBINE
- COMPRESSOR (CENTRIFUGAL) BLOWER TURBINE
- AXIAL FLOW MIXTURE PUMP
- ROTARY PUMP
- SUBMERSIBLE SUMP PUMP
- SUBMERSIBLE SUMP PUMP
- BLOWER / FAN

ACTUATOR SYMBOLS

- T MANUAL
- XX PNEUMATIC DIAPHRAGM SPRING-OPPOSED, SINGLE OR DOUBLE ACTING
- VALVE POSITIONER
- XX PNEUMATIC CYLINDER SINGLE OR DOUBLE ACTING ACTUATED BY ONE INPUT
- DIFFERENTIAL PRESSURE DIAPHRAGM
- XX ELECTRO-HYDRAULIC
- XX SOLENOID ACTUATOR
- XX HYDRAULIC ACTUATOR
- XX MOTOR ACTUATOR

NOTE:
ON LOSS OF PRIMARY POWER (PNEUMATIC, ELECTRICAL OR HYDRAULIC)
XX: FO = FAIL OPEN
FC = FAIL CLOSED
FLP = FAIL TO LAST POSITION

INCLUDED IN FMP FOR INSTALLATION INFORMATION

ECR-14-000762 Page 94

DWG NO	TITLE
H-2-833526	INDEX OF DRAWINGS

DRAWING TRACEABILITY LIST

REF NUMBER	TITLE
NEXT USED ON	REFERENCES

REV	DESCRIPTION				
3	REVISED PER DCN-200W-279	WJB 6/24/12	BLS 7/26/12	SW 7/18/12	

REVISIONS

NAME	DATE	COMPANY
DRAWN BY E. KRISTEL	4/11/12	CH
DSGN BY G. DAVIS	4/11/12	CH
CHK G. DAVIS	4/11/12	CH
APPD BY B. SASSER	4/11/12	CH/WSC
MANAGER REV FOR REV 3 R. HANKS	4/11/12	CH
DESIGN AUTHORITY RAMBO	4/23/12	WSC

U.S. DEPARTMENT OF ENERGY
Richland Operations Office

TITLE: GENERAL I&C LEGEND

SIZE	BLDG NO	INDEX NO	DWG NO	REV
D	200W	9903	H-2-833534	3

SCALE NONE KEY DCN-200W-030 SHEET 2 OF

XXXX PLOTID XXXX

DWG NO H-2-833735 SH 24 OF REV 0

NOTES:

1. PAINT STEEL PLATE IN ACCORDANCE WITH CONSTRUCTION SPECIFICATION SGW-57598 09 90 00, PAINTING.
2. WELDING SHALL BE IN ACCORDANCE WITH CONSTRUCTION SPECIFICATION SGW-57598 05 05 23, WELDING.
3. BREAK SHARP EDGES AND GRIND ALL BURRS.

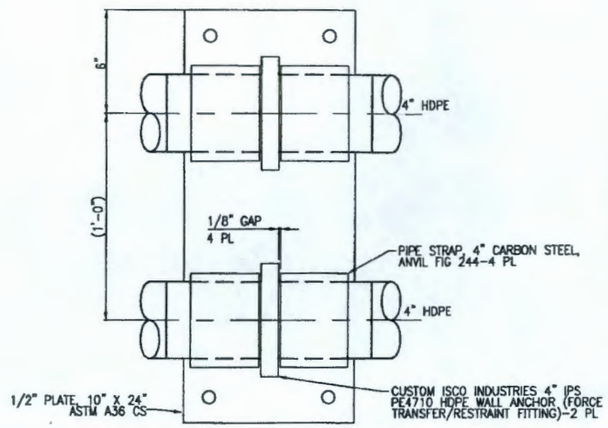

PLAN VIEW

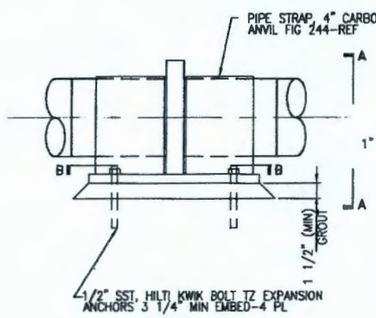

ELEVATION

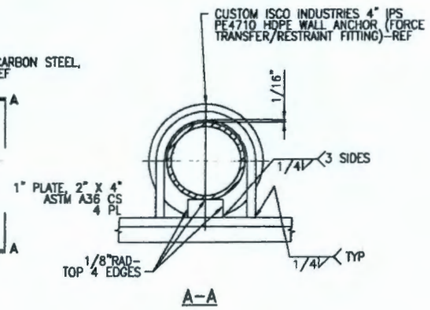

A-A

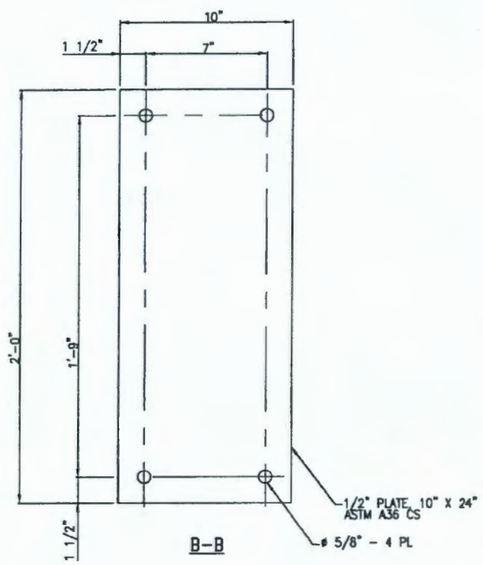

B-B

PIPE ANCHOR FOR 4" HDPE

NTS

2205-810

INCLUDED IN FMP FOR INSTALLATION INFORMATION

ECR-14-000513 PAGE Page 95

DWG NO	TITLE		
DRAWING TRACEABILITY LIST			
		H-2-833526	INDEX OF DRAWINGS
		REF NUMBER	TITLE
		REFERENCES	
		NEXT USED ON	

REV	DESCRIPTION	DRN	CHKD	CHRP	COMPANY
0	ISSUED PER ECR-14-000513	DCB 7/08/14			

REVISIONS

	NAME	DATE
DESIGN AGENCY	AL ESPARZA	
DESIGN	DC BOOTHROYD	4/28/14
CHECKED	A KORIC	4/30/14
APPROVED	MA PRZYBLSKI	7/8/14

U.S. DEPARTMENT OF ENERGY
Richland Operations Office

TITLE: MECHANICAL PIPE SUPPORT STANDARD DETAILS

SIZE D | BLDG NO 280TA | SHEET NO 8554 | DWG NO H-2-833735 | REV 0

SCALE AS NOTED | EDT ECR-14-000513 | SHEET 24 OF

XXXX PLOTID XXXX

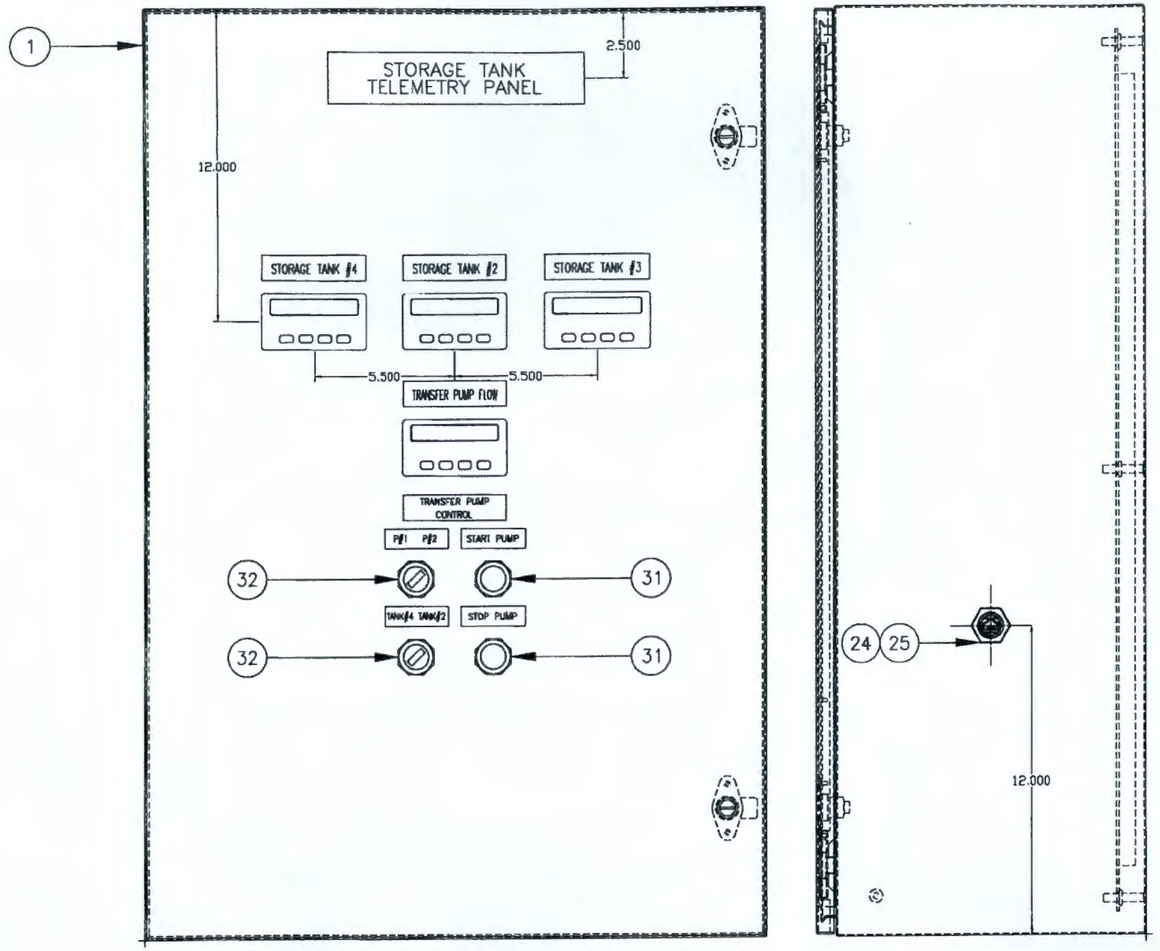

TELEMETRY PANEL DOOR ARRANGEMENT DETAIL

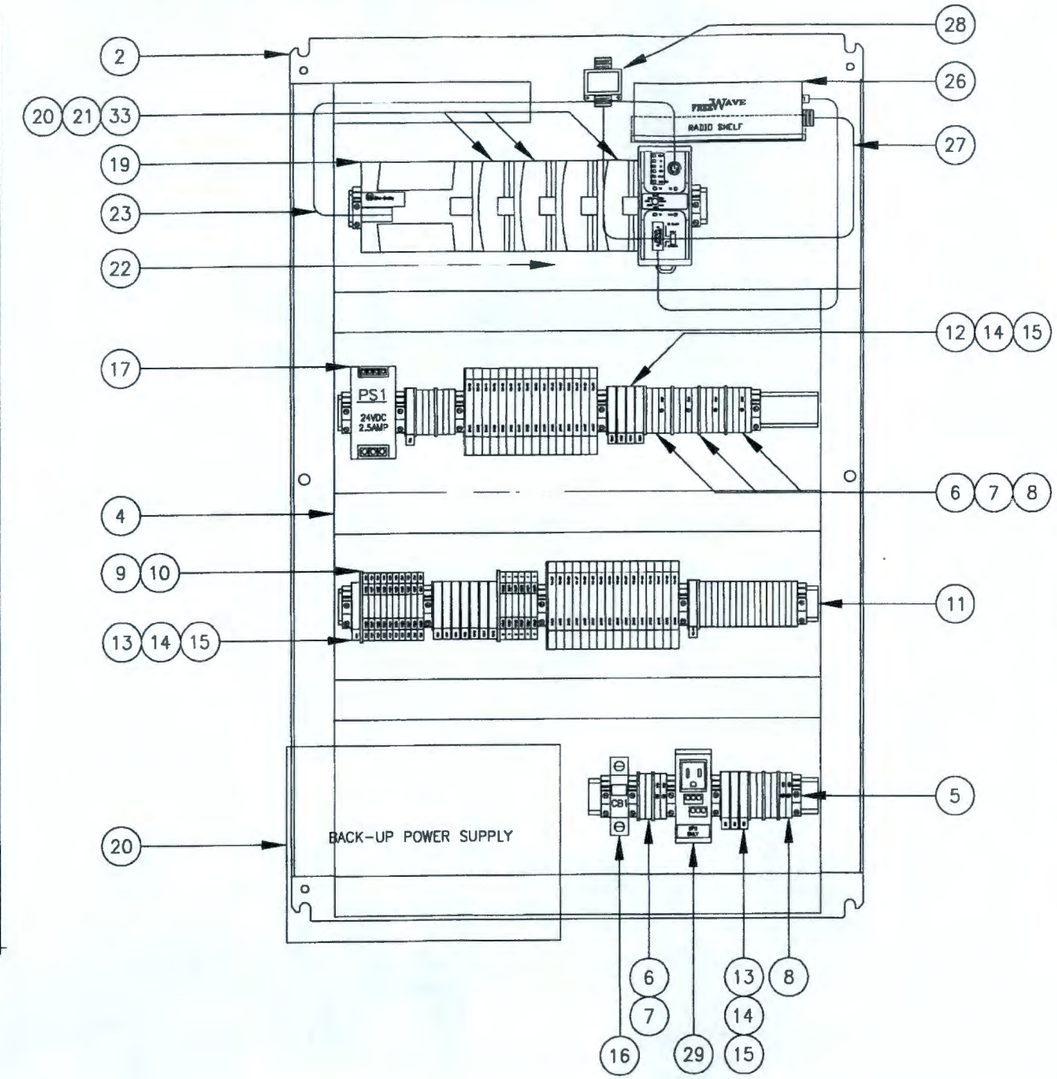

TELEMETRY PANEL INTERIOR ARRANGEMENT DETAIL

ECR-14-000762 PAGE 96

NOTE:

1. SEE DRAWING 5142-402 FOR ELEMENTARY DIAGRAM.
2. RADIO ANTENNA LIGHTNING ARRESTOR CAN BE BULKHEAD MOUNTED AS SHOWN OR MOUNTED INTERNAL TO ENCLOSURE IF CONDUIT IS USED.

ENGR	N/A	
DFTG APPD	B. DEWITT	12/07
CHECKED	B.T.	12/07
DRAWN	R. HARRIS	12/07
ORIGIN	RKH	12/07
SCALE	NONE	
PROJECT NUMBER:		5142
AUTOCAD PLOT DATE:		2/04/10
AUTOCAD FILE NUMBER:	5142_3031.DWG	
PROJECT:	E.R.D.F.	

TOTAL ENERGY

TITLE: ENVIRONMENTAL RESTORATION DISPOSAL FACILITY
STORAGE TANK TELEMETRY PANEL LAYOUT

CUSTOMER: U.S. DEPARTMENT OF ENERGY

SIZE	DWG NO.	SHT	OF	REV
	5142-302	1	2	1

BILL OF MATERIAL

NO.	QTY	DESCRIPTION	MANUFACTURER	PART NUMBER
1	1	ENCLOSURE, NEMA 12, 36X24X12	HOFFMAN	CSD362412
2	1	BACKPANEL 36X24	HOFFMAN	CP3624
3				
4	A/R	WIRE DUCT W/ COVER, 1.5" x 2"	ABB/ENTRELEC	1SL5165A000
5	15	TERMINAL BLOCK, END STOP	ABB/ENTRELEC	103 002.26
6	40	TERMINAL BLOCK, SINGLE POLE, M4/6	ABB/ENTRELEC	115 116.07
7	11	TERMINAL BLOCK, SINGLE POLE, END SECTION	ABB/ENTRELEC	118 368.16
8	8	TERMINAL BLOCK, SINGLE POLE, GROUNDING, M4/6	ABB/ENTRELEC	165 113.16
9	16	TERMINAL BLOCK, DOUBLE POLE, M4/6	ABB/ENTRELEC	115 271.22
10	2	TERMINAL BLOCK, DOUBLE POLE, END SECTION	ABB/ENTRELEC	118 499.23
11	A/R	DIN RAIL	ABB/ENTRELEC	101 598.26
12	5	TERMINAL BLOCK, FUSED, 24V LED BFI, M4/8 SFD	ABB/ENTRELEC	115 663.23
13	12	TERMINAL BLOCK, FUSED, 120V NEON BFI, M4/8 SFL	ABB/ENTRELEC	115 661.21
14	17	TERMINAL BLOCK, FUSED, END SECTION	ABB/ENTRELEC	116 951.15
15	17	FUSE, 5x20MM, POWER-GUARD 217 SERIES (SEE ELEMENTRY DWG FOR SIZING)	LITTLEFUSE	217.xxx
16	1	CIRCUIT BREAKER, 10A, SINGLE POLE, DIN	CUTLER-HAMMER	WMS1C10
17	1	POWER SUPPLY, 24VDC, 2.5A, DIN MOUNT	SOLA/HEVY-DUTY	SDN2.5-24-100P
18	1	UPS, POWERWARE 5115, 750VA, 500W, 120VAC	EATON POWERWARE	05146554-5501

BILL OF MATERIAL

NO.	QTY	DESCRIPTION	MANUFACTURER	PART NUMBER
19	1	MICROLOGIX 1100, PROGRAMMABLE CONTROLLER, 120VAC	ALLEN-BRADLEY	1763-L16AWA
20	1	MICROLOGIX 1200, 4CH ANALOG INPUT	ALLEN-BRADLEY	1762-IF4
21	2	MICROLOGIX 1200, 16CH DC INPUT	ALLEN-BRADLEY	1762-IQ16
22	1	AIC+ ADVANCED INTERFACE CONVERTER	ALLEN-BRADLEY	1761-NET-AIC
23	1	CABLE, 8-PIN MINI DIN TO 8-PIN MINI DIN	ALLEN-BRADLEY	1761-CBL-HM02
24	1	ETHERNET CONNECTOR, BULKHEAD, RJ-35 TO RJ-45	MOLEX	84700-0001
25	1	ETHERNET CONNECTOR, DUST COVER	MOLEX	84700-0003
26	1	SPREAD SPECTRUM RADIO, 900MHZ, 24VDC	FREEWAVE	FGR-115RC
27	1	LMR240 CABLE WHIP, TYPE N-M TO TYPE N-M, 3FT.	TALLEY COMMUNICATIONS	CXTA42A-03
28	1	RADIO ANTENNA LIGHTNING ARRESTOR	POLYPHASER	IS-B50LN-C2
29	1	AC POWER MODULE, DIN, OUTLET	ASI	IMACP01
30	3	DIGITAL PANEL METER, 120VAC, 4-20MA INPUT	DURANT	57701-401
31	2	MOMENTARY PUSHBUTTON, FLUSH BLACK, 1"NO", 1"NC"	CUTLER-HAMMER	10250T30B
32	2	2 POS MAINTAINED SELECTOR SWITCH, 1"NO", 1"NC"	CUTLER-HAMMER	10250T20KB
33	1	MICROLOGIX 1200, 16CH RLY OUTPUT	ALLEN-BRADLEY	1762-OW16
34				

ECR-14-000762 PAGE 97

NOTE:

1. SEE SHEET 1 FOR ARRANGEMENT DETAIL.

STORAGE TANK TELEMETRY PANEL BILL OF MATERIAL

ENGR	N/A	
DFTG APPD	B. DEWITT	12/07
CHECKED	B.T.	12/07
DRAWN	R. HARRIS	12/07
ORIGIN	RKH	12/07
SCALE	NONE	
PROJECT NUMBER:	5142	
AUTOCAD PLOT DATE:	2/14/11	
AUTOCAD FILE NUMBER: 5142_3022.DWG		
PROJECT:	E.R.D.F.	

TOTAL ENERGY RESOURCES & SERVICES

TITLE: ENVIRONMENTAL RESTORATION DISPOSAL FACILITY TELEMETRY PANEL BILL OF MATERIAL

CUSTOMER: U.S. DEPARTMENT OF ENERGY

SIZE	DWG NO.	SHT	OF	REV
	5142-302	2	2	1

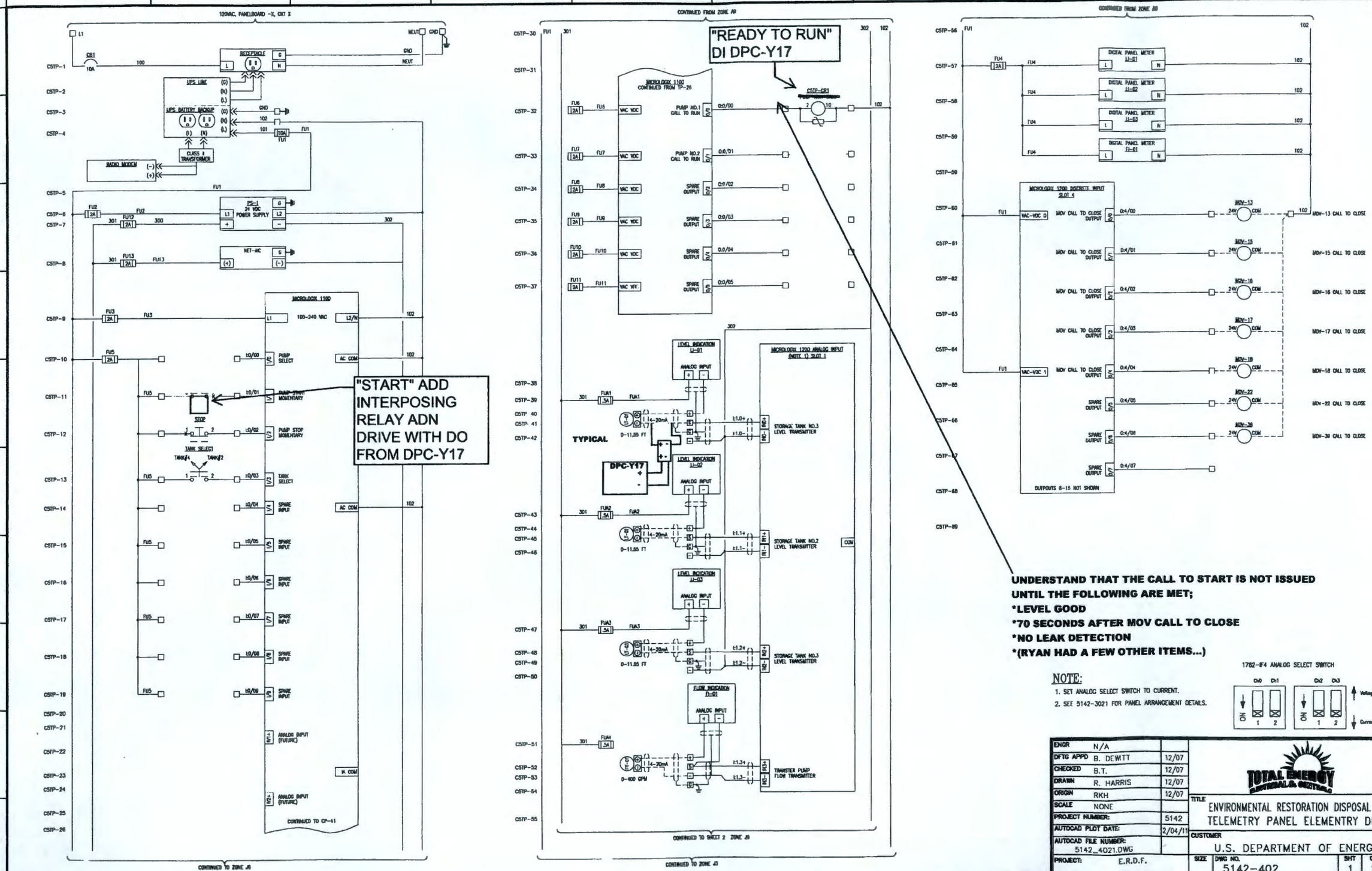
"READY TO RUN" DI DPC-Y17
"START" ADD INTERPOSING RELAY ADN DRIVE WITH DO FROM DPC-Y17
TYPICAL
DPC-Y17
UNDERSTAND THAT THE CALL TO START IS NOT ISSUED
UNTIL THE FOLLOWING ARE MET;
*LEVEL GOOD
*70 SECONDS AFTER MOV CALL TO CLOSE
*NO LEAK DETECTION
*(RYAN HAD A FEW OTHER ITEMS...)
NOTE:
1. SET ANALOG SELECT SWITCH TO CURRENT.
2. SEE 5142-3021 FOR PANEL ARRANGEMENT DETAILS.
1762-IF4 ANALOG SELECT SWITCH
ENGR N/A
DFTG APPD B. DEWITT 12/07
CHECKED B.T. 12/07
DRAWN R. HARRIS 12/07
ORIGIN RKH 12/07
SCALE NONE
PROJECT NUMBER: 5142
AUTOCAD PLOT DATE: 2/04/11
AUTOCAD FILE NUMBER: 5142_4021.DWG
PROJECT: E.R.D.F.
TOTAL ENERGY
TITLE ENVIRONMENTAL RESTORATION DISPOSAL FACILITY
TELEMETRY PANEL ELEMENTRY DIAGRAM
CUSTOMER U.S. DEPARTMENT OF ENERGY
SIZE DWG NO. 5142-402 SHT 1 OF 2 REV 1
ECR-14-000762 PAGE 18

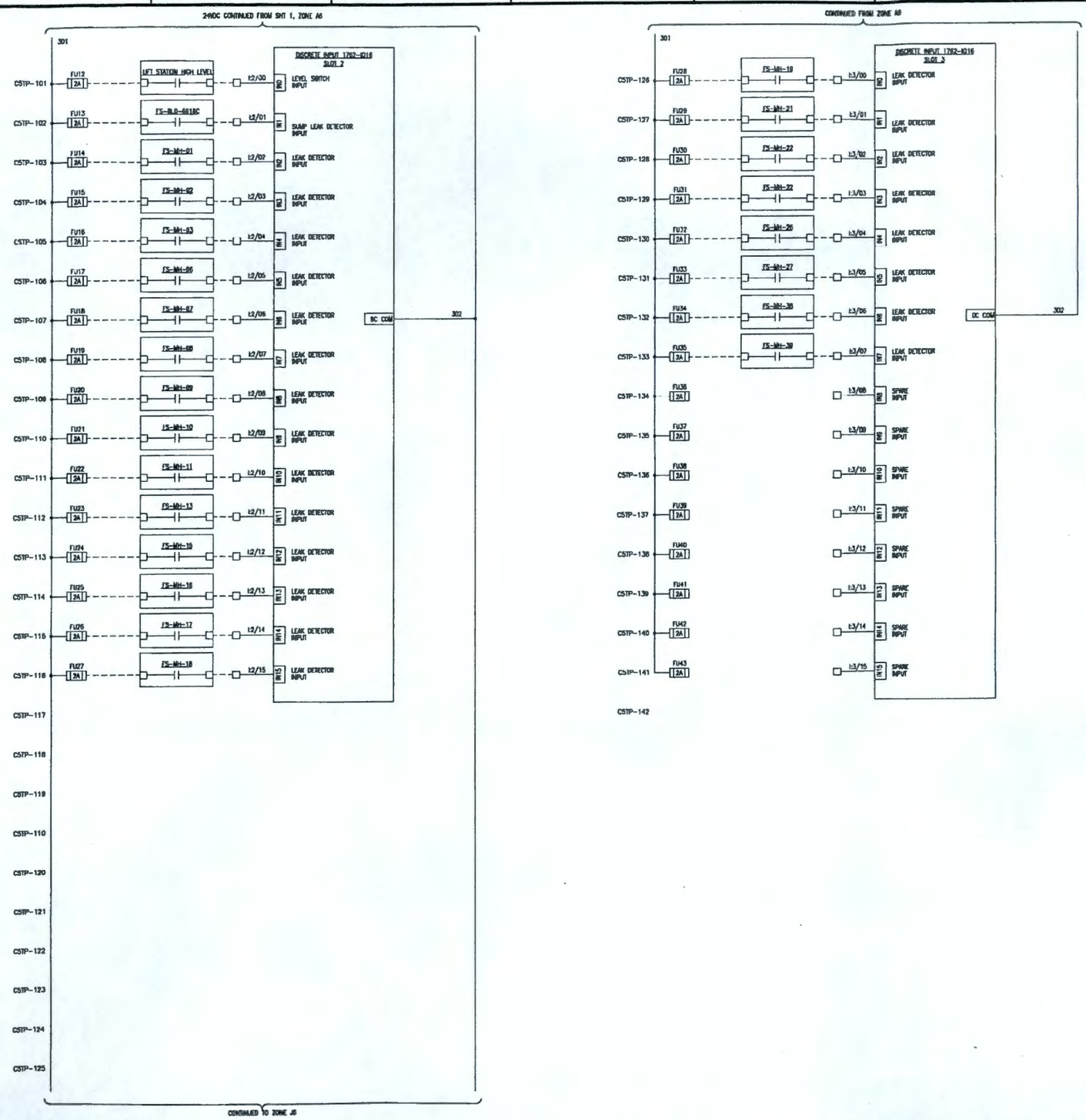

NOTE:

1. SEE 5142-3021 FOR PANEL ARRANGEMENT DETAILS.
2.

ENGR	N/A	
DFTG APPD	B. DEWITT	12/07
CHECKED	B.T.	12/07
DRAWN	R. HARRIS	12/07
ORIGIN	RKH	12/07
SCALE	NONE	
PROJECT NUMBER:		5142
AUTOCAD PLOT DATE:		6/25/09
AUTOCAD FILE NUMBER:	5142_4022.DWG	
PROJECT:	E.R.D.F.	

TOTAL ENERGY ELECTRICAL & CONTROLS

TITLE: ENVIRONMENTAL RESTORATION DISPOSAL FACILITY TELEMETRY PANEL ELEMENTRY DIAGRAM

CUSTOMER: U.S. DEPARTMENT OF ENERGY

SIZE	DWG NO.	SHT	OF	REV
	5142-402	2	2	1

ECR-14-000762 PAGE 99

CHPRC ENVIRONMENTAL-ACTIVITY SCREENING FORM

SECTION A. Work Description

Title and Summary (include a detailed summary):

Design, construct, and operate a leachate transfer piping system from ERDF to 2WP&T facility. CHPRC-02242, Functional Design Criteria ERDF Leachate Line to 200 West Pump and Treat describes criteria and fundamental design requirements necessary to develop conceptual, preliminary, and definitive design for the project. The scope of the project is to install a leachate transfer piping system to pump leachate derived from landfill operations from the Environmental Restoration Disposal Facility (ERDF) to the 2WP&T and integrate that process with the existing ERDF and 2WP&T operations. JCS: CS-14-07599

SECTION B-2 Continued, Existing CERCLA Response Action Documentation:

a. DOE/RL-98-47, Draft B, ERDF Leachate Delisting Petition (for externalreview)
b. 1999 ERDF ROD Amendment (conditionally delisted ERDF leachate,with treatment at ETF as a condition)
c. WCH-182, Rev. 2, ERDF Leachate and Washwater Management Plan (plan is a condition of the delisting)
d. WCH-173, Rev. 0, ERDF Leachate Sampling and Analysis Plan
e. 1995 200 Area ZP-1 Operable Unit Record of Decision
f. DOE/RL-2008-78, Rev. 0, 2WP&T RDR/RAWP
g. DOE/RL-2009-124, Rev. 3, 200 West Pump and Treat Operations and Maintenance Plan

Identification No. (e.g., Project No., Work Plan No., Work Order No.): ECR-14-000762	Date: 01/20/2015	Revision No.:

SEE FOLLOWING PAGES FOR SECTIONS B, E, AND F

SECTION C. Work Management Applicability (based on information from Sections B, E, and F)

- ☐ The work is covered under existing NEPA Documentation (see Sections B-3 and B-4).
- ☒ The work is covered under existing CERCLA Documentation (see Section B-2).
- ☐ Screening showed no new environmental documents, approvals, or other actions are needed.
- ☒ Screening showed the following new environmental documents, approvals, or other actions are needed (list in Section G):
- ☐ Screening identified new environmental aspects that require evaluation (list and notify EMS Coordinator; see Section F).
- ☐ The work has potential to effect accomplishment of CHPRC/Project EMS objectives and targets. List controls that will mitigate negative effects, and notify EMS Coordinator (see Section F).

SECTION G. New Environmental Documents, Approvals, Other Actions Required Before Work Proceeds (based on information from Sections B, E, and F)

Changes to the following:

a. ERDF CERCLA ROD, e.g. an Explanation of Significant Difference (prior to construction)
b. Change to WCH-182, Rev. 2 ERDF Leachate and Wastewater Management Plan(prior to operation)
c. Change to WCH-173, Rev. 0, ERDF Leachate Sampling and Analysis Plan (prior to operation)
d. Hanford Site Excavation permit (prior to construction)
e. Identification of any ARARs associated with this work not previously identified (prior to construction)

See Note 1 on Page 2 for prohibition on "proceeding at regulatory risk."

SECTION D. Approvals	Name (Printed)	Signature	Date	Form Disposition
Initiator				MAINTAIN A COPY IN THE APPLICABLE PROJECT FILE OR WORK PACKAGE
Concurrence (Cognizant Environmental Compliance Officer [ECO])	David Watson		1-22-15	

A-6004-962 (REV 2)

ECR-14-000762 SL-1 100

SECTION B. NATIONAL ENVIRONMENTAL POLICY ACT (NEPA)/CULTURAL AND/OR ECOLOGICAL RESOURCES/COMPREHENSIVE ENVIRONMENTAL RESPOSE, COMPENSATION AND LIABILITY ACT (CERCLA)

B-1, CULTURAL AND/OR ECOLOGICAL RESOURCE EVALUATION	Yes	No
Will work affect **cultural and/or ecological resources**, as described in PRC-PRO-EP-15332, *Environmental Protection Requirements*, Section 2.2 (e.g., cultural artifacts, wetlands, historical facility, aquifers, Hanford Reach National Monument, areas within ¼ mile of Columbia River)? If **NO**, go to B-2. If any answer is **YES**, list the cultural and/or ecological review and/or excavation permit number that applies. Cultural Review: 88-200-38, 93-200-001 Ecological Review ECR-: ECR-2014-227 Excavation Permit No.: TBD Go to **B-2**.	☒	☐

B-2. CERCLA RESPONSE ACTION (To be completed by ECO)	Yes	No
*Is the work being conducted as part of a CERCLA response action? See Note 2 below. List CERCLA Document(s) Title/ No.: See list in Section A and G If the answer is **YES**, go to Section E. If the answer is **NO**, go to Section B-3. ***Note: Although work performed under CERCLA does not require separate NEPA documentation, such work is limited to activities that directly support the response action identified in the associated CERCLA documentation. Actions planned at, or adjacent to, CERCLA facilities that are not within the scope of the CERCLA documentation must be reviewed separately under the NEPA process.*** ***If assistance is needed to coordinate a NEPA analysis, or to incorporate NEPA values into CERCLA documentation, contact the NEPA / SEPA or CERCLA SME.***	☒	☐

B-3. EXISTING NEPA DOCUMENTATION APPLIES	Yes	No
Is the work (proposed action) evaluated in a previous EA or EIS? If **YES**, fill in Section I – IV and VII of the NEPA Review Screening Form (RL-721), send to the DOE Hanford NEPA Compliance Officer for information, and attach a copy to this form. Go to Section E If **NO**, go to B-4.	☐	☒

B-4. SITEWIDE CATEGORICAL EXCLUSION (SWCX) APPLIES	Yes	No
Does the work (proposed action) fit within the scope of actions identified in a DOE Hanford NEPA Compliance Officer approved SWCX? If **NO**, go to B-5. If **YES**, fill in Sections I – V of the NEPA Review Screening Form (RL-721). If the answers to all of the SWCX criteria in Section V are **NO**, the SWCX applies. Complete Section VII of the NEPA Review Screening Form, send it to the DOE Hanford NEPA Compliance Officer for information, and attach a copy to this form. Go to Section E. If the answer to any of the SWCX criteria in Section V is **YES**, go to B-5.	☐	☒

B-5. SITEWIDE CATEGORICAL EXCLUSION (SWCX) DOES NOT APPLY

Contact the NEPA/SEPA Subject Matter Expert to identify NEPA review requirements, then go to Section E.

1. NOTE: PROCEEDING AT 'REGULATORY RISK' PROHIBITED. Project and activity planning must, at the outset, identify all environmental protection requirements governing the work, and include the timely completion of those requirements into project schedules. In particular, schedules should fully allow for the time required by regulatory agencies to complete their review of applications for permits, and similar submittals. Work cannot begin or continue unless all regulatory prerequisites applicable to project commencement and/or completion have been satisfied. In cases where it is unclear if preliminary work (e.g., procurement, site preparation) can proceed prior to a regulatory approval, consult with the Director, Environmental Protection. If we intend to satisfy a particular regulatory requirement through a waiver or variance granted by the enforcing agency, such waiver or variance must be clearly documented in writing from the enforcing agency (including, but not limited to, DOE, the Environmental Protection Agency, Washington Department of Ecology, Washington Department of Health) and the waiver or variance must be reviewed and determined adequate by the Director, Environmental Protection. Failure to do this could place CHPRC at serious risk of enforcement action, fines and penalties, contract penalties, and damage to CH2M HILL's business reputation and integrity.

2. NOTE: It is CHPRC policy to conduct activities under CERCLA authority whenever possible. In order to expedite CERCLA actions and allow them to proceed at less cost, Congress removed the "permitting," administrative, reporting and enforcement provisions requirements of other promulgated environmental regulations from these actions, providing that only "substantive" provisions from these regulations would apply. By contract, CHPRC is tasked with performing Hanford Site cleanup with maximum efficiency. Therefore CHPRC is to take every opportunity to ensure that whenever possible, activities and projects are identified as components of CERCLA response actions. This includes explicit identification of the activities in CERCLA project documents such as Remedial Investigation/Feasibility Study reports, Proposed Plans, Records of Decision, Engineering Evaluation/Cost Analyses, Action Memoranda, and Remedial Action/Removal Action Work Plans. Further, activities which are conducted for the purpose of information gathering for the CERCLA process (including sampling and analysis, construction/operation of treatability studies, and management of wastes generated by these activities (investigation derived waste)) should be documented in project descriptions and correspondence with DOE and the regulatory agencies as being CERCLA removal actions.

RE-14-00762 SL 1/21

CHPRC ENVIRONMENTAL-ACTIVITY SCREENING FORM (continued)

SECTION E. Activity Screening – Select the activities that apply to the workscope. Refer to PRC-RD-EP-15332, *Environmental Protection Requirements*, Section 2.0, for Category Applicability Statements. NOTE: When reviewing this section for activities that are conducted as part of a CERCLA response action, review the requirements against the approved removal action/remedial action work plan. Where requirements are not addressed by the work plan, consult the CERCLA SME. List necessary follow-up actions in Section G.

Performing Project Scoping Activities and Siting Studies

- ☐ 2.2 Performing Project Scoping Activities and Siting Studies

Constructing or Modifying Facilities, Equipment, or Processes

- ☐ **2.3 General**
- ☐ 2.4 Constructing or Modifying Stationary Criteria / Toxic Air Emission Sources
- ☐ 2.5 Constructing or Modifying Air Emission Units That Potentially Emit Radionuclides to the Ambient Air
- ☐ 2.6 Constructing or Modifying RCRA TSD Units
- ☐ 2.7 Constructing or Modifying Public Water, Raw Water, or Export Water Systems
- ☐ 2.8 Constructing or Modifying Sanitary Sewer Systems, or Constructing or Modifying Onsite Sewage Systems, or Adding or Modifying Discharges to the Columbia River, or Discharges to the Land
- ☐ 2.9 Constructing or Modifying Storage Tanks or Container Storage Areas That Store Oil
- ☐ 2.10 Installing Regulated USTs
- ☐ 2.11 Relocating Portable Criteria Pollutant Air Emission Sources, or Bringing Portable or Stationary Criteria Air Pollutant Emission Source Onto the Site

Operating Facilities, Equipment, or Processes

- ☐ **2.12 General**
- ☐ 2.13 Operating Facilities, Equipment, or Processes That Emit Criteria / Toxic Air Pollutants
- ☐ 2.14 Operating Stationary Facilities and Equipment That Potentially Emit Radionuclides to the Ambient Air
- ☐ 2.15 Operating Regulated USTs
- ☐ 2.16 Operating Onsite Sewage Systems
- ☐ 2.17 Operating Storage Tanks or Container Storage Areas That Store Oil
- ☐ 2.18 Operating Public Water Systems
- ☐ 2.19 Operating Interim Status RCRA TSD Units
- ☐ 2.20 Operating Final Status RCRA TSD Units
- ☐ 2.21 Using Portable or Temporary Air Emission Sources That Emit Radionuclides
- ☐ 2.22 Using PCB Oil-Filled Electrical Equipment, Electromagnets, Switches, and Voltage Regulators
- ☐ 2.23 Using and Storing Chemicals, Chemical Products, and Hazardous Materials
- ☐ 2.24 Performing Operations Consistent With NEPA Routine Administrative Activities
- ☐ 2.25 Finding Special Status Animals or Plants (Live or Dead) on the Hanford Site
- ☐ 2.26 Responding to Regulatory Agency Inspections

Maintaining and Repairing Facilities, Equipment, or Processes

- ☐ **2.27 General**
- ☐ 2.28 Maintaining Stationary Facilities and Equipment That Potentially Emit Radionuclides to the Ambient Air
- ☐ 2.29 Maintaining or Repairing Major Continuous Emissions Monitoring or Emissions Measurement Systems

Maintaining and Repairing Facilities, Equipment, or Processes – Continued

- ☐ 2.30 Maintaining and Testing HEPA Filters
- ☐ 2.31 Starting Up, Shutting Down, or Performing Scheduled Maintenance on Stationary Air Emissions Sources
- ☐ 2.32 Repairing an Onsite Sewage System / Maintaining UIC Stormwater Well
- ☐ 2.33 Reporting New WIDS Sites and Reclassifying or Reassigning WIDS Sites
- ☐ 2.34 Maintaining Assigned WIDS Sites, Including Assessing Potential Impacts
- ☐ 2.35 Servicing "Motor Vehicle Air-Like" Conditioners
- ☐ 2.36 Maintaining, Servicing, or Repairing Stationary Heating, Ventilation, Air Conditioning, and Refrigeration Equipment
- ☐ 2.37 Performing Activities That May Break Up, Disturb, or Preclude Access to Regulated Asbestos-Containing Material
- ☐ 2.38 Removing and/or Disturbing Asbestos-Containing Material (i.e., Renovation)
- ☐ 2.39 Repairing Regulated USTs
- ☐ 2.40 Applying and Storing Pesticides
- ☐ 2.41 Conducting Open Burning
- ☐ 2.42 Decontaminating Materials and Equipment Contaminated with PCBs

Discontinuing Use of, DD&D, or Closing Facilities (Including Trailers), Equipment, or Processes

- ☐ **2.43 General**
- ☐ 2.44 Temporarily Closing Regulated USTs
- ☐ 2.45 Permanently Closing Regulated USTs or Making a Change in Service
- ☐ 2.46 Closing RCRA TSD Units
- ☐ 2.47 Discontinuing Use of or Relocating a Satellite Accumulation Area
- ☐ 2.48 Discontinuing Use of or Closing a 90-Day Accumulation Area
- ☐ 2.49 Closing or Removing a Septic Tank Farm Service
- ☒ 2.50 Performing CERCLA Response Actions (PRC-PRO-EP-25415)
- ☐ 2.51 Discontinuing Use of or Closing Injection Wells

Purchasing Goods or Services

- ☐ 2.52 Purchasing Refrigerants, Appliances Containing Refrigerants, System Components That Operate Using Refrigerants, or Refrigerant Recovery or Recycling Equipment
- ☐ 2.53 Procuring Pesticides or Pesticide Applicators
- ☐ 2.54 Procuring HEPA Filters

- ☒ **2.55 Excavating or Otherwise Disturbing Soils**
- ☐ **2.56 Environmental Event Notification (Including Spills and Releases and Agency Notifications)**

ECE-14-00076 SK 1/2 102

CHPRC ENVIRONMENTAL-ACTIVITY SCREENING FORM (continued)

SECTION E (continued). Activity Screening – Select the activities that apply to the workscope. Refer to PRC-RD-EP-15332, *Environmental Protection Requirements*, Section 2.0, for Category Applicability Statements.

Generating, Identifying, and Designating Waste

- ☒ 2.57 Generating Waste
- ☐ 2.58 Identifying and Designating Waste
- ☐ 2.59 Generating Investigation Derived Waste Within a Waste Site or Suspected Waste Site
- ☐ 2.60 Generating Investigation Derived Waste Outside a Waste Site
- ☐ 2.61 Identifying and Designating Investigation Derived Waste

Managing, Accumulating, or Storing Waste or Materials

- ☐ 2.62 Managing Soil, Groundwater, and Debris Contaminated With Listed Dangerous Waste
- ☐ 2.63 Managing Waste Characterization and Treatability Study Samples and Their Residues
- ☐ 2.64 Managing Unknown Waste
- ☐ 2.65 Managing Materials With Potential Future Use
- ☐ 2.66 Accumulating Waste in a Satellite Accumulation Area
- ☐ 2.67 Accumulating Waste in a 90-Day Accumulation Area
- ☐ 2.68 Storing PCB Items For Reuse
- ☐ 2.69 Storing PCB Waste and PCB Items For Disposal
- ☐ 2.70 Storing Asbestos Waste
- ☐ 2.71 Storing Investigation Derived Waste

Treating Dangerous and/or Mixed Waste

- ☐ 2.72 Performing Treatability Studies
- ☐ 2.73 Performing Generator Treatment of Dangerous and/or Mixed Wastes
- ☐ 2.74 Treating Dangerous and/or Mixed Waste

Pollution Prevention/Waste Minimization (P2/WMin) Process

- ☐ 2.75 General
- ☐ 2.76 Recycling Process
- ☐ 2.77 Managing Recyclable or Reclaimable Materials Through the Centralized Consolidation/Recycling Center
- ☐ 2.78 Managing Lead-Acid Batteries That Will *Not* Be Sent to the Centralized Consolidation/Recycling Center
- ☐ 2.79 Accumulating Used Oil For Recycling and Managing Used Automotive Oil Filters
- ☐ 2.80 Accumulating Spent Antifreeze For Recycling
- ☐ 2.81 Accumulating Used Shop Towels For Recycling

Disposing of Waste Materials

- ☐ 2.82 Disposing of Containerized Waste
- ☐ 2.83 Disposing of Asbestos Waste
- ☐ 2.84 Disposing of Sanitary Waste
- ☐ 2.85 Disposing of Empty Containers
- ☐ 2.86 Disposing of Inert and Demolition Waste (Nonradioactive, Nondangerous)
- ☐ 2.87 Disposing of Nondangerous, Nonradioactive, Containerized Waste
- ☐ 2.88 Disposing of PCB Waste and PCB Items
- ☐ 2.89 Disposing of Investigation Derived Waste
- ☐ 2.90 Distributing, Excessing, or Disposing of Appliances Containing Refrigerants

Discharging Existing Approved Wastewaters

- ☐ 2.91 Discharging Wastewaters to the Columbia River
- ☐ 2.92 Discharging Wastewaters to the Land Surface, Including Injection Wells
- ☐ 2.93 Discharging Wastewaters to a Sanitary Sewer System
- ☐ 2.94 Conducting a UIC Well Assessment
- ☐ 2.95 Annual UIC Well Update Submitted to Washington Department of Ecology
- ☐ 2.96 Portable Radioactive Air Emissions Monitoring and Tracking Documentation

SECTION F. Environmental Management System (EMS) Impacts (To be completed by ECO)

	Yes	No
Does this activity need to be added to the CHPRC Aspect Ranking work sheet (i.e., is it a new activity that triggers an environmental aspect evaluation)?	☐	☒
Does this activity have the potential to effect accomplishment of CHPRC EMS Objectives and Targets?	☐	☒

NOTE: ***Current EMS Objectives and Targets can be viewed on the CHPRC ISMS / EMS website.***

SR-14-000 TR2 SR — p 103

SGW-58619
Revision 2

Impact of Environmental Remediation Disposal Facility (ERDF) Leachate on the 200 West Area Pump and Treat Facility

Prepared for the U.S. Department of Energy
Assistant Secretary for Environmental Management

Contractor for the U.S. Department of Energy
under Contract DE-AC06-08RL14788

ch2m

P.O. Box 1600
Richland, Washington 99352

Approved for Public Release;
Further Dissemination Unlimited

SGW-58619
Revision 2

Impact of Environmental Remediation Disposal Facility (ERDF) Leachate on the 200 West Area Pump and Treat Facility

Document Type: TR Program/Project: Soil & Groundwater Remediation Project

M. A. Carlson
CH2M HILL Plateau Remediation Company

Date Published
September 2015

Prepared for the U.S. Department of Energy
Assistant Secretary for Environmental Management

Contractor for the U.S. Department of Energy
under Contract DE-AC06-08RL14788

P.O. Box 1600
Richland, Washington 99352

APPROVED
By Julia Raymer at 1:54 pm, Sep 23, 2015

Release Approval Date

Approved for Public Release;
Further Dissemination Unlimited

TRADEMARK DISCLAIMER

Reference herein to any specific commercial product, process, or service by tradename, trademark, manufacturer, or otherwise, does not necessarily constitute or imply its endorsement, recommendation, or favoring by the United States Government or any agency thereof or its contractors or subcontractors.

This report has been reproduced from the best available copy.

Printed in the United States of America

CHPRC RECORD OF REVISION (ROR)	(1) Document Number SGW-58619

(2) Title
Impact of Environmental Remediation Disposal Facility (ERDF) Leachate on the 200 West Pump and Treat Facility

Change Control Record

(3) Revision	(4) Description of Change – Replace, Add, and Delete Pages ADD ROW	Authorized for Release (5) DA/TA Date
2 RS	Document amended to include brief statement that all known, available, and reasonable methods of prevention, control and treatment were considered for treatment of ERDF leachate.	M. A. Carlson 9/21/2015 ☒
		☒
		☒
		☒
		☒
		☒
		☒
		☒
		☒
		☒
		☒
		☒
		☒
		☒
		☒
		☒
		☒
		☒
		☒
		☒
		☒
		☒

A-6004-786 (REV 2)

TECHNICAL MEMORANDUM

Impact of Environmental Remediation Disposal Facility (ERDF) Leachate on the 200 West Pump and Treat

Prepared for:	Soil & Groundwater Remediation Project
Prepared by:	M. A. Carlson, Process Engineer 9/21/2015
CCs:	W. F. Barrett, Operations Director
	J. G. Riddelle, Design Engineering/Process Data Manager
	G.G. Bergquist, Engineering Manager 9/21/15
	^CHPRC Correspondence
Date:	September 17, 2015
Doc ID	SGW-58619, REV 2

1. Purpose:

The purpose of this technical memorandum is to compare the expected concentration of key Environmental Restoration Disposal Facility (ERDF) leachate to the criteria used for designing the 200 West Area Pump and Treat (2WP&T) treatment process.

2. Background:

Plans are underway to pump the leachate from ERDF to the 200WP&T for processing. On average 2.1 million gallons of leachate is produced per year from precipitation or operational activities such as spray down. This water will be pumped to the 2WP&T and treated by the uranium ion exchange (U-IX) system, Tc-99 ion exchange (Tc-99 IX) system and the biological treatment system. Figure 1 portrays the current 2WP&T system and where the ERDF stream will be added.

Figure 1. General Process Flow Showing Where Streams Enter the Treatment Process

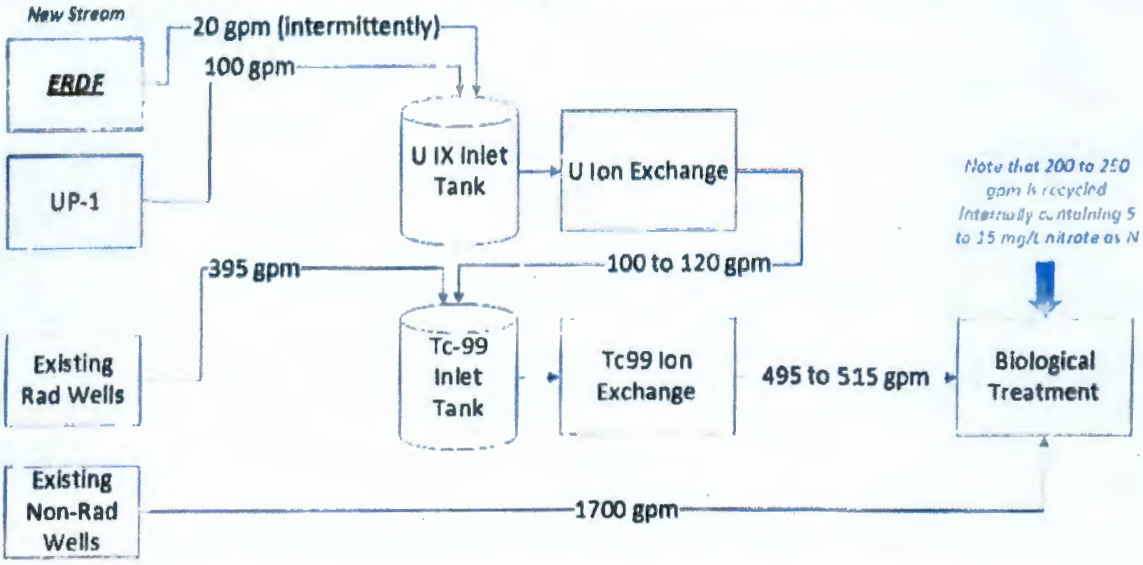

Flows will need to be managed to remain within the treatment capacity of the 2WP&T and the flows listed in Figure 1 represent one of many combinations that are under consideration. The impact of adding ERDF leachate to the other waste streams is presented in the following sections.

3. Impact of ERDF Leachate

The concentrations of critical contaminants were evaluated with ERDF flow added. Although the average annual leachate flow is 4 gpm, the pumps will operate periodically (e.g. weekly) to supply the leachate to the 2WP&T. The pumps supplying water from ERDF to the 2WP&T will pump as low as 20 gpm. The flow rate for the ERDF stream was assumed to be 20 gpm for this analysis.

The UP-1 wells are projected to produce between 100 and 226 gpm. Consistent with current practice the well flows will be adjusted to maintain a constant nitrate load to avoid upsetting the biological process. The treatment plant is designed to reduce nitrate concentrations to less than 10 mg/L NO_3-N, the cleanup level for both 200-ZP-1 (ZP-1) and UP-1 OUs. For this analysis, the flow from UP-1 was assumed to be 100 gpm. A low flow was selected to emphasize the impact of ERDF leachate. At greater UP-1 flows, the impact of ERDF leachate becomes muted and difficult to distinguish.

The concentrations of contaminants after ERDF leachate is added to the existing streams were compared to the criteria that provided the basis of the process design. Two cases were considered: expected conditions using average concentrations from ERDF and worst case conditions using 95th percentile concentrations from ERDF. The analysis calculates combined flow concentrations at the following three locations:

1) Combined UP-1 and ERDF streams going to the U-IX resin treatment system,
2) U-IX effluent combined with the existing ZP-1 "rad" well water feed to the Technetium-99 ion exchange system (Tc-99 IX)
3) Tc-99 IX effluent combined with the ZP-1 "non-rad" well water feed to the biological treatment system.

Tables 1 through 3 compare the resulting combined influent concentrations to the plant design criteria. The design criteria are from the *"Basis of Design Report 200 West Area Pump and Treat System Biological Groundwater Treatment Facilities"* (382519-TMEM-024, 2010[1]) by CH2M HILL. The contaminant concentrations used to calculate the values in Tables 1 through 3 are presented in Tables 4 through 7. When added to the water from the UP-1 wells, ERDF leachate will reduce the concentration of Tc-99, carbon tetrachloride and nitrate, but will increase the concentrations of uranium and tritium.

During the current 2WP&T operation, flows from various wells are carefully managed to provide manageable contaminant loads and consistent nitrate concentrations to 2WP&T. Flows from UP-1 and ERDF leachate will be managed in a similar vein to maintain a consistent nitrate load. The ERDF stream will be non-continuous and may require coordination with other streams slated for 2WP&T treatment to maintain the target nitrate load. The data presented in Tables 1-3 are based on the following flows:

- 20 gpm from ERDF
- 100 gpm from UP-1
- 390 gpm from ZP-1 radiologically active wells (Tc-99)
- 1700 gpm from ZP-1 non radiologically active wells

This is one of many possible scenarios to provide insight to the impact of ERDF leachate on the concentration of contaminants.

The contaminants are present at concentrations less than those considered during the design of the facility. ERDF leachate increases the uranium content but it is within the treatment capacity of the system. Therefore ERDF leachate can be treated by the 2WP&T facility to meet the established cleanup levels.

The cleanup levels, summarized in Table 8, were defined in the Record of Decision for the Hanford 200 Area (ROD). The cleanup levels were based on:

1) The Federal Drinking Water Maximum Contaminant Levels
2) The Model Toxics Control Act Method B Cleanup Levels
3) EPA's Implementation Guidance for Radionuclides

The background leading to the establishment of the cleanup levels is available in the Record of Decision[2]

ERDF leachate has a small impact on the concentration of the contaminants of concern. No pretreatment of ERDF leachate is required. With careful planning and coordination between 2WP&T and ERDF staff, the 2W P&T is expected to treat ERDF leachate and meet established clean-up levels.

---

[1] 382519-TMEM-024, 2010, Basis of Design Report, 200 West Area Pump and Treat System Biological Groundwater Treatment Facilities, Rev. 3, CH2M HILL Plateau Remediation Company, Richland, Washington.

[2] EPA, Ecology, and DOE, 2008, *Record of Decision, Hanford 200 Area, 200 ZP-1 Superfund Site, Benton County, Washington*, USA, Environmental Protection Agency, Washington State Department of Ecology, and U.S. Department of Energy, Olympia, Washington. Available at: http://www.epa.gov/superfund/sites/rods/fulltext/r2008100003103.pdf

Note that treatment is not provided for tritium. As explained in the ROD, tritium removal will be addressed by monitored natural attenuation.

The treatment technology at 2WP&T was selected after review of several alternatives[3] and designed using state of the art process technology using generally accepted guidelines[4]. After treatment at 2WP&T all identified constituents in ERDF leachate will be below drinking water standards. Based on the evaluations previously performed for the 2WP&T and on its proximity to ERDF, treatment of ERDF leachate at 2WP&T is a reasonable and effective approach.

[3] DOE/RL-2007-28, *Feasibility Study Report for the 200-AP-1 Groundwater Operable Unit,* U.S. Department of Energy, Richland, Washington.

[4] 382519-TMEM-024, 2010, Basis of Design Report, 200 West Area Pump and Treat System Biological Groundwater Treatment Facilities, Rev. 3, CH2M HILL Plateau Remediation Company, Richland, Washington.

Table 1. Impact of ERDF Leachate on Select Contaminant Concentrations to Uranium Ion Exchange System

Contaminants of Concern (units)	Influent Concentration Without ERDF Flow[1]	Influent Concentration With Average ERDF Concentrations[2]	Influent Concentration With 95th Percentile ERDF Concentrations[3]	Original Design Treatment Capacity of U IX System
Technetium-99 (pCi/L)	1,805	1,564	1,573	9,050
Iodine-129 (pCi/L)	0.89	0.78	1.04	NA
Tritium (pCi/L)	313	11,743	16,273	NA
Uranium (µg/L)	61.7	307	367	10,000[4]
Carbon Tetrachloride (µg/L)	144	120	120	NA
Nitrate as N (mg/L)	65	64	70	NA

1 - Influent from planned UP-1 uranium plume (U-Plant area) extraction system set at 100 gpm. Concentrations reflect expected concentrations using averages from groundwater monitoring wells 299-W19-34A, -34B, -35, -36, -43, -48, and -101, over the period of January 1, 2009 through March 31, 2014.

2 - Assumes an ERDF flow rate of 20 gpm. Concentrations reflect expected conditions and are averages. Concentrations of Iodine-129, tritium, and carbon tetrachloride are from ERDF annual reports from March 2011 to March 2013. Concentrations of Technetium-99, uranium, and nitrate were updated through February 2014 because they were present at greater concentrations in general and were trending toward greater concentrations. The update was provided by ERDF staff.

3 - Assumes an ERDF flow rate of 20 gpm. Concentrations reflect a worst case condition and are the 95th percentiles. Concentrations of Iodine-129, tritium, and carbon tetrachloride are from ERDF annual reports from March 2011 to March 2013. Concentrations of Technetium-99, uranium, and nitrate were updated through February 2014 because they were present at greater concentrations in general and were trending toward greater concentrations. The update was provided by ERDF staff.

4- Treatment capacity for uranium is estimated from studies at other sites and will be confirmed by careful monitoring. Concentrations are significantly less than the estimated capacity and are not expected to exceed treatment capacity.

NA - not applicable, not treated by train.

Table 2. Impact of ERDF Leachate on Select Contaminant Concentrations to Technetium-99 Ion Exchange System

Contaminants of Concern (units)	Influent Concentration Without ERDF Flow[1]	Influent Concentration With ERDF Flow using Average Concentrations[2]	Influent Concentration With ERDF Flow Using 95th Percentile Concentrations[3]	Original Design Treatment Capacity of Tc-99 IX System
Technetium-99 (pCi/L)	1149	1,105	1,105	14,400
Iodine-129 (pCi/L)	0.35	0.3	0.4	NA
Tritium (pCi/L)	4,617	7,113	8,169	NA
Uranium (µg/L)	1.6	2.7	2.7	NA
Carbon Tetrachloride (µg/L)	760	731	731	NA
Nitrate as N (mg/L)	41	42	43	NA

1 - ERDF and UP-1 after treatment by uranium IX flows with existing ZP-1 rad well extraction system at 390 gpm. Existing ZP-1 rad well water concentrations into the Tc-99 ion-exchange train were based on a flow-weighted mass balance using typical extraction well flows and concentrations as of November 18, 2014. Concentrations in ERDF and UP-1 feed to the Tc-99 IX system were adjusted for expected removals across the uranium ion exchange resin.

2 - Assumes an ERDF flow rate of 20 gpm. Concentrations reflect expected conditions and are averages. Concentrations of Iodine-129, tritium, and carbon tetrachloride are from ERDF annual reports from March 2011 to March 2013. Concentrations of Technetium-99, uranium, and nitrate were updated through February 2014 because they were present at greater concentrations in general and were trending toward greater concentrations. The update was provided by ERDF staff.

3 - Assumes an ERDF flow rate of 20 gpm. Concentrations reflect a worst case condition and are the 95th percentiles. Concentrations of Iodine-129, tritium, and carbon tetrachloride are from ERDF annual reports from March 2011 to March 2013. Concentrations of Technetium-99, uranium, and nitrate were updated through February 2014 because they were present at greater concentrations in general and were trending toward greater concentrations. The update was provided by ERDF staff.

NA - not applicable, not treated by train.

Table 3. Impact of ERDF Leachate on Select Contaminant Concentrations to Biological Treatment System

Contaminants of Concern (units)	Influent Concentration Without ERDF Flow[1]	Influent Concentration With ERDF Flow using Average Concentrations[2]	Influent Concentration With ERDF Flow using 95th Percentile Concentrations[3]	Treatment Capacity of Train
Technetium-99 (pCi/L)	74	73	73	NA
Iodine-129 (pCi/L)	0.2	0.2	0.2	NA
Tritium (pCi/L)	2,163	2,765	3,011	NA
Uranium (µg/L)	1.6	1.7	1.7	NA
Carbon Tetrachloride (µg/L)	511	506	506	665
Nitrate as N (mg/L)	24	24	25	44

1 - Influent flow from existing ZP-1 extraction system at 395 gpm to the Tc-99 ion exchange system and another 1700 gpm pumped directly to the biological treatment system plus 100 gpm from the UP-1 wells. With the exception of carbon tetrachloride, existing ZP-1 well water concentrations into the biological treatment process were based on average process sample concentrations as of November 18, 2014. Carbon tetrachloride was based on the average concentration in the influent tank from December 4, 2014 through August 11, 2015. The concentrations in the water treated by ion exchange have been adjusted for expected removals across the ion exchange resin.
2 - Assumes an ERDF flow rate of 20 gpm. Concentrations reflect expected conditions and are averages. Concentrations of Iodine-129, tritium, and carbon tetrachloride are from ERDF annual reports from March 2011 to March 2013. Concentrations of Technetium-99, uranium, and nitrate were updated through February 2014 because they were present at greater concentrations in general and were trending toward greater concentrations. The update was provided by ERDF staff.

3 - Assumes an ERDF flow rate of 20 gpm. Concentrations reflect a worst case condition and are the 95th percentiles. Concentrations of Iodine-129, tritium, and carbon tetrachloride are from ERDF annual reports from March 2011 to March 2013. Concentrations of Technetium-99, uranium, and nitrate were updated through February 2014 because they were present at greater concentrations in general and were trending toward greater concentrations. The update was provided by ERDF staff.

NA - not applicable, not treated by train.

Table 4. Concentrations in Groundwater Wells from UP-1

Contaminant (a = activity)	Units	Average Concentration	Source
Technetium-99 (a)	pCi/L	1,805	HEIS*
Iodine-129 (a)	pCi/L	0.89	HEIS
Tritium (a)	pCi/L	313	HEIS
Uranium (a)	pCi/L	92	HEIS
Carbon tetrachloride	µg/L	144	HEIS
Nitrate (as N)	mg/L	65	HEIS

* Hanford Environmental Information System (HEIS) 01/01/2009 to 03/31/2014 from 299-W19-34A, 299-W19-34B, 299-W19-35, 299-W19-36, 299-W19-43, 299-W19-48, and 299-W19-101

Table 5. Concentrations in ERDF Leachate

Contaminant (a = activity)	Units	Average Concentration	95th Percentile Concentration	Source
Technetium-99 (a)	pCi/L	356	413	ERDF 2013 Annual Report updated through February 2015 with records supplied by ERDF staff
Iodine-129 (a)	pCi/L	0.2*	1.8*	ERDF Annual Report from March 2011 to March 2013
Tritium (a)	pCi/L	68,891	96,075	ERDF Annual Report from March 2011 to March 2013
Uranium (a)	pCi/L	775	1,018	ERDF 2013 Annual Report updated through February 2015 with records supplied by ERDF staff
Carbon tetrachloride	µg/L	1.70*	2.50*	ERDF Annual Report from March 2011 to March 2013
Nitrate (as N)	mg/L	59	96	ERDF 2013 Annual Report updated through February 2015 with records supplied by ERDF staff

* All samples below detection.

Table 6. Concentrations in Existing ZP-1 Rad Wells

Contaminant (a = activity)	Units	Average Concentrations[1]
Technetium-99 (a)	pCi/L	1,406
Iodine-129 (a)	pCi/L	0.22*
Tritium (a)	pCi/L	5,707
Uranium (a)	pCi/L	1.9
Carbon tetrachloride	µg/L	916
Nitrate (as N)	mg/L	35

1 - Flow weighted data from sampling event in Fall of 2014 (October and November)
*All samples below detection

Table 7. Concentrations in Existing ZP-1 Non-Rad Wells

Contaminant (a = activity)	Units	Average Concentrations[1]
Technetium-99 (a)	pCi/L	93
Iodine-129 (a)	pCi/L	0.2*
Tritium (a)	pCi/L	1,448
Uranium (a)	pCi/L	0.9
Carbon tetrachloride	µg/L	778
Nitrate (as N)	mg/L	19

1 - Flow weighted data from sampling event in Fall of 2014 (October and November)
* All samples below detection

Table 8. ZP-1 Final Cleanup Levels

Contaminant	Units	Final Clean-up Level*
Technetium-99	pCi/L	900
Iodine-129	pCi/L	1
Tritium	pCi/L	20,000
Uranium	µg/L	30
Carbon tetrachloride	µg/L	3.4
Nitrate (as N)	mg/L	10

*EPA, Ecology, and DOE, 2008, *Record of Decision, Hanford 200 Area, 200 ZP-1 Superfund Site, Benton County, Washington*, US., Environmental Protection Agency, Washington State Department of Ecology, and U.S. Department of Energy, Olympia, Washington. Available at: http://www.epa.gov/superfund/sites/rods/fulltext/r2008100003103.pdf