OFFICE OF RIVER PROTECTION
P.O. Box 450, MSIN H6-60
Richland, Washington 99352

NOV 2 0 2018

18-ECD-0078

Ms. Alexandra K. Smith, Program Manager
Nuclear Waste Program
Washington State
Department of Ecology
3100 Port of Benton Blvd.
Richland, Washington 99354

Ms. Smith:

SUBMITTAL OF ANALYTICAL LABORATORY AND LOW-ACTIVITY WASTE FACILITY SYSTEM DESIGN DESCRIPTION DOCUMENTS

References:
1. WA7890008967, "Dangerous Waste Portion of the Hanford Facility Resource Conservation and Recovery Act Permit for the Treatment, Storage, and Disposal of Dangerous Waste, Operating Unit 10, "Waste Treatment and Immobilization Plant."
2. BNI letter from V. McCain to B.T. Vance, ORP, "Submittal of System Design Description Documents and Change Notices for Dangerous Waste Critical Systems to the Administrative Record of Hanford Facility Resource Conservation And Recovery Act Permit," CCN: 308520, dated October 17, 2018.

This letter transmits the following updated system design descriptions for inclusion in the Administrative Record:

- 24590-BOF-3ZD-25-00001, Rev. 2, *Effluent Management Facility (EMF) Design Description and System Design Descriptions (ACV, CIV, DEP, DVP)*, (Attachment 1)
- 24590-LAB-3ZN-RLD-00004, *Add Construction and Installation Certification Requirements to 24590-LAB-3ZD-RLD-00001*, (Attachment 2)
- 24590-LAW-3ZD-LOP-00001, Rev. 2, *LAW Primary Offgas Process (LOP) and LAW Secondary Offgas/Vessel Vent Process (LVP) System Design Description*, (Attachment 3)
- 24590-LAW-3ZN-LFP-00003, *Updates to LFP/LCP SDD to Align with DSA*, (Attachment 4)
- 24590-LAW-3ZN-LMP-00004, *Incorporation of DSA Requirements and Open EIES into the LAW LMP SDD 24590-LAW-3ZD-LMP-00001*, (Attachment 5)

- 24590-LAW-3ZN-LOP-00006, *Incorporation of DSA Requirements, Work Off Items (Punchlist, ATS, CRs), and Open EIEs into the LAW LOP SDD 24590-LAW-3ZD-LOP-00001*, (Attachment 6)

- 24590-LAW-3ZN-LOP-00007, *Add Construction and Installation Certification Requirements to 24590-LAW-3ZD-LOP-00001*, (Attachment 7)

- 24590-LAW-3ZN-RLD-00005, *Updated LAW RLD SDD to Align Content with RLD System Related Upper Tier Requirements Changes in the Document 24590-LAW-DSA-NS-18-0001, Documented Safety Analysis (DSA) for the Low-Activity Waste Facility*, (Attachment 8).

These system design descriptions are being submitted to Washington State Department of Ecology to replace earlier versions of system descriptions that were incorporated into the Dangerous Waste Permit Administrative Record.

If you have any questions, please contact Gae M. Neath, Environmental Compliance Division, (509) 376-7828.

Glyn D. Trenchard, Assistant Manager
Technical and Regulatory Support

ECD:GMN

Attachments: (8)

cc w/attachs:
D. Casey, BNI
V. Lagen, BNI
R. Landon, BNI
V. McCain, BNI
D. Yasek, BNI
J. Cantu, Ecology
A.S. Carlson, Ecology (5 hard copies)
M.E. Jones, Ecology
J.K. Perry, MSA
A.C. McKarns, RL
J. Atwood, YN
Administrative Record (WTP H-0-8)
BNI Correspondence
Environmental Portal

cc w/o attachs:
M. Johnson, CTUIR
S.L. Dahl, Ecology
D. McDonald, Ecology
G.P. Bohnee, NPT
K. Niles, Oregon Energy
P. PAK, RL
R. Longoria, YN (Acting)

Attachment 1
18-ECD-0078
(325 Pages Excluding Cover Sheet)

24590-BOF-3ZD-25-00001, Rev. 2, *Effluent Management Facility (EMF) Design Description and System Design Descriptions (ACV, CIV, DEP, DVP)*

Issued by
RPP-WTP PDC

Effluent Management Facility (EMF) Design Description and System Design Descriptions (ACV, C1V, DEP, DVP)

Document title:	Effluent Management Facility (EMF) Design Description and System Design Descriptions (ACV, C1V, DEP, DVP)
Document number:	24590-BOF-3ZD-25-00001
Revision number:	2
Type:	☑ System Design Description ☑ Facility Design Description
Originator(s):	Peter Suyderhoud
Checked by:	Wayne Sexton
Checker's signature:	Signature — Date: 2-Aug-2018
Concurrence:	Ian Milgate
Concurrence signature:	Manager of Engineering and Design Authority Signature — Date: 8/3/18
Approved by:	Sarah Barker
Approver's position:	Systems Engineering Manager
Approver's signature:	Signature — Date: 8/3/18

Validation

Appl.	Requirement Area	Requirement Developer	Signature	Date
☑	Architectural Design	Philippe Theriault	Per Email*	7/5/18
☑	Civil/Structural Design	Philippe Theriault	Per Email*	7/5/18
☑	Controls & Instrumentation Design	Neal J. Schertz	Per Email*	7/13/18
☑	Electrical Design & AHJ	Scott Goad	Per Email*	7/20/18
☑	Fire Protection Engineering	David Nieman	[signature]	7/26/18
☑	HVAC Design	Sarah Barker	[signature]	8/3/18
☑	Mechanical Handling Design	Sarah Barker	[signature]	8/3/18
☑	Mechanical Systems Design	Sarah Barker	[signature]	8/3/18
☑	Plant Design	Jim McGrath	Per Email*	7/5/18
☑	Process Engineering	Bob Hanson	Per Email*	7/5/18
☐	Interface (External)			
☐	Interface (Internal)			
☑	System Functions and Requirements	Jerid Mauss	[signature]	8-2-18
☐	Equipment Environmental Qualification			
☑	Materials Engineering / Technology	Tom Erwin	APPROVED By Tom Erwin at 5:29 am, Aug 02, 2018	
☐	Plant Software Design			
☑	Environmental Permitting (ESH)	Roger Landon	Per Email*	7/11/18
☑	Nuclear Safety Engineering	Kraig Wendt	K. Wendt	7-26-18
☐	Criticality Safety			
☑	Radiological Engineering	Kyle Peltier	Per Email*	7/11/18
☐	Industrial Safety/Hygiene (ESH)			
☐	Mission (WTP Contract functional/ performance rqmts)			
☑	Operations Requirements Document (Plant Ops)	Maurice Bunker**	Per Email*	7/11/18
☑	Quality Assurance	Greg Butt	Per Email*	7/6/18
☑	Safeguards & Security	Adam Loomis	Per Email*	7/9/18
☐	Startup			
☐	Transportation & Logistics			

*For validation signature emails, see 24590-BOF-EDR-SYSE-18-0003
**Maurice Bunker provided a validation signature for Tim Dallas per 24590-WTP-TDOA-OP-18-00145

History Sheet

Rev	Reason for revision	Revised by
0	Initial issue.	H. Carroll, R. Moeslein
1	Incorporated 24590-BOF-3ZN-25-00001. Incorporated impacts associated with Condition Report 24590-WTP-GCA-MGT-16-00865. Incorporated impacts associated with 24590-WTP-EIE-SYSE-16-0045, 24590-LAW-EIE-NS-15-0005, 24590-WTP-EIE-SYSE-16-0042, 24590-BOF-EIE-PR-16-0003, 24590-BOF-EIE-ENG-16-0001 and 24590-WTP-EIE-SYSE-17-0001. Links for the EIE documents listed against 24590-BOF-3ZD-25-00001 should be removed in InfoWorks. Incorporated impacts associated with 24590-WTP-ORDCN-OP-16-002 and 24590-WTP-ORDCN-OP-16-013. Incorporated Section 4 content not included in previous revision. Incorporated updates to Section 3 requirements for consistency with upper-tier requirements documents Incorporated general updates to existing Section 1-3 descriptive text for clarity and consistency with current design.	R. Moeslein
2	Incorporated the Phase 2A work scope, including: • Removed code/standard requirements already in the Code of Record • Aligned Section 3 requirements with upper tier document changes • Updated Sections 4.1.1 through 4.1.4 to align with the current design • Originated Section 4.1.6 • Revised test criteria in Appendices A, B, and C Reclassified the previous “LAW effluent electrical building ventilation system” as the C1V system to align with the nomenclature used by the Design Agency. Revised the functional diagrams and general description in Section 2 based on the current EMF design. Updated the system boundaries based on the latest design documentation. Added orphan requirements not captured in previous revisions that are applicable to the EMF/DFLAW design. The following ATSs were reviewed for incorporation and can be closed: • 24590-WTP-ATS-MGT-15-0584 • 24590-WTP-ATS-MGT-15-0585 • 24590-WTP-ATS-MGT-15-0630 • 24590-WTP-ATS-MGT-17-0192 • 24590-WTP-ATS-MGT-17-0194 • 24590-WTP-ATS-MGT-17-0195 • 24590-WTP-ATS-MGT-17-0197 • 24590-WTP-ATS-MGT-17-0281 • 24590-WTP-ATS-MGT-17-0285 The following EIEs were incorporated: • 24590-BOF-EIE-MS-18-0030 (Updated EMF-BSA system description) • 24590-BOF-EIE-PR-16-0003 (No impacts – this EIE was incorporated in the previous revision) • 24590-LAW-EIE-NS-15-0005 (No impacts – the LAW PDSA has been superseded by the LAW DSA) • 24590-LAW-EIE-NS-18-0005 (Removed references to the LAW PDSA due to the issuance of the LAW DSA)	P. Suyderhoud

- 24590-WTP-EIE-SYSE-15-0059 (No impacts – the requirements modified by 24590-WTP-ORDCN-OP-15-015 are not allocated to this document)
- 24590-WTP-EIE-SYSE-16-0097 (Incorporated requirements associated with NOC 1043)
- 24590-WTP-EIE-SYSE-16-0098 (No impacts – requirements are already in alignment with 24590-WTP-ORDCN-OP-16-013)
- 24590-WTP-EIE-SYSE-17-0008 (No impacts – 24590-WTP-BODCN-ENG-17-0007 requirements for vertical chases do not apply to the EMF)
- 24590-WTP-EIE-SYSE-17-0012 (Revised requirement 3.5.1.1.6 and added new requirement 3.15.1.2.7 to align with 24590-WTP-BODCN-ENG-17-0008)
- 24590-WTP-EIE-SYSE-17-0026 (Revised crane/hoist requirements to align with 24590-WTP-ORDCN-OP-16-012)
- 24590-WTP-EIE-SYSE-17-0043 (No impacts – 24590-WTP-BODCN-ENG-17-0011 does not change requirements as they are written this document)

The following EIEs are rolled forward to the next revision:

- 24590-BOF-EIE-MS-18-0111
- 24590-BOF-EIE-PR-18-0001

Contents

Validation ii

History Sheet iii

1 Introduction 1

1.1 Facility and System Identification 1

1.2 Limitations and Scope 1

1.3 Ownership and Maintenance 2

1.4 Definitions/Glossary 2

1.5 Acronyms and System Designators 3
1.5.1 Acronyms 3
1.5.2 System Designators 5

2 General Overview 6

2.1 System Functions/Safety Functions 15

2.2 System/Facility Classification 28

2.3 Basic Operational Overview 29

3 Design Requirements 41

3.1 Requirements 41

3.2 Bases 41

3.3 References 41

3.4 Effluent Management Facility-Level Requirements 42
3.4.1 General Requirements 42
3.4.2 Requirements Related to Off-Normal/Emergency (Design Basis) Conditions and Configurations 43
3.4.3 Nuclear Safety, ALARA, Environmental, and Other Regulatory Requirements 46
3.4.4 Interface Requirements 62
3.4.5 Other Technical, Specialty, Operations and Maintenance Requirements 65
3.4.6 Other Facility-Level Requirements 79

3.5 General DEP System Requirements 88
3.5.1 Mission and Functional/Performance Requirements (Including States/Modes) 88
3.5.2 Nuclear Safety, ALARA, Environmental, and Other Regulatory Requirements 93
3.5.3 System Interface Requirements 93
3.5.4 Other Technical, Specialty, Operations and Maintenance Requirements 93

3.6 DEP System Equipment Requirements 103
3.6.1 Vessel Requirements 103
3.6.2 Evaporator Requirements 107
3.6.3 Heat Exchanger Requirements 108
3.6.4 Pump/Ejector Requirements 110
3.6.5 General Piping Requirements 113
3.6.6 Mixer/Agitator Requirements 116

3.7 DEP System Monitoring and Control Requirements 117
3.7.1 Mission and Functional/Performance Requirements (Including States/Modes) 117
3.7.2 Nuclear Safety, ALARA, Environmental, and Other Regulatory Requirements 118
3.7.3 System Interface Requirements 118
3.7.4 Other Technical, Specialty, Operations, and Maintenance Requirements 119

3.8 General HVAC Requirements 121
3.8.1 Mission and Functional/Performance Requirements (Including States/Modes) 121
3.8.2 Nuclear Safety, ALARA, Environmental and Other Regulatory Requirements 124
3.8.3 System Interface Requirements 125
3.8.4 Other Technical, Specialty, Operations and Maintenance Requirements 125

3.9 C1V System Requirements 130
3.9.1 Mission and Functional/Performance Requirements (Including States/Modes) 130
3.9.2 Nuclear Safety, ALARA, Environmental and Other Regulatory Requirements 133
3.9.3 System Interface Requirements 133
3.9.4 Other Technical, Specialty, Operations and Maintenance Requirements 133

3.10 ACV Supply System Requirements 133
3.10.1 Mission and Functional/Performance Requirements (Including States/Modes) 133
3.10.2 Nuclear Safety, ALARA, Environmental and Other Regulatory Requirements 135
3.10.3 System Interface Requirements 135
3.10.4 Other Technical, Specialty, Operations and Maintenance Requirements 135

3.11 ACV Exhaust System Requirements 136
3.11.1 Mission and Functional/Performance Requirements (Including States/Modes) 136
3.11.2 Nuclear Safety, ALARA, Environmental, and Other Regulatory Requirements 140
3.11.3 System Interface Requirements 140
3.11.4 Other Technical, Specialty, Operations and Maintenance Requirements 140

3.12 DVP System Requirements 140
3.12.1 Mission and Functional/Performance Requirements (Including States/Modes) 140
3.12.2 Nuclear Safety, ALARA, Environmental, and Other Regulatory Requirements 141
3.12.3 System Interface Requirements 141
3.12.4 Other Technical, Specialty, Operations and Maintenance Requirements 141

3.13 HVAC Monitoring and Control Requirements 143
3.13.1 Mission and Functional/Performance Requirements (Including States/Modes) 143
3.13.2 Nuclear Safety, ALARA, Environmental, and Other Regulatory Requirements 145
3.13.3 System Interface Requirements 146
3.13.4 Other Technical, Specialty, Operations, and Maintenance Requirements 146

3.14 Underground Transfer Piping Requirements 147
3.14.1 Mission and Functional/Performance Requirements (Including States/Modes) 147
3.14.2 Nuclear Safety, ALARA, Environmental, and Other Regulatory Requirements 157
3.14.3 System Interface Requirements 157
3.14.4 Other Technical, Specialty, Operations, and Maintenance Requirements 157

3.15 Underground Transfer Piping Monitoring and Control Requirements 157
3.15.1 Mission and Functional/Performance Requirements (Including States/Modes) 157
3.15.2 Nuclear Safety, ALARA, Environmental, and Other Regulatory Requirements 164
3.15.3 System Interface Requirements 164
3.15.4 Other Technical, Specialty, Operations, and Maintenance Requirements 164

3.16 Relevant Codes and Standards (for System Requirements) 164
3.16.1 Codes of Records 164
3.16.2 WTP Standards, Design Criteria, and (General) Specifications 167

4 System Description 175

4.1 Configuration Information 175
4.1.1 Description of System, Subsystems, and Major Components 175
4.1.2 Facility/Process Boundaries and Interfaces 208
4.1.3 Physical Layout and Location 209
4.1.4 Principles of Operation 215

4.1.5 System Reliability Features 219
4.1.6 System Control Features 222

4.2 Operations 278
4.2.1 Initial Configuration (Pre-startup) 278
4.2.2 System Startup 278
4.2.3 Normal Operations 279
4.2.4 Off-Normal Operations 279
4.2.5 System Shutdown 279
4.2.6 Safety Management Programs and Administrative Controls 279

4.3 Testing and Maintenance 279
4.3.1 Temporary Configurations 279
4.3.2 TSR-Required Surveillances 279
4.3.3 Non-TSR Inspections and Testing 280
4.3.4 Maintenance 280

4.4 Supplemental Information 280

5 References and Design Documents List 281

5.1 Source / Basis References 281

5.2 Other References 281

5.3 System and Facility Design Documents 282

Appendices

Appendix A Test Objectives, Conditions, and Acceptance Criteria A-1

Appendix B Descriptions of Functional Flow and Interactions B-1

Appendix C Active Safety Instruments and Functions C-1

Appendix D System Procedures D-1

Appendix E System History E-1

Tables

Table 2-1 Functional Analysis and Crosswalk to Requirements for EMF Functions 17

Table 2-2 Functional Analysis and Crosswalk to Requirements for DEP System Functions 21

Table 2-3 Functional Analysis and Crosswalk to Requirements for C1V System Functions 25

Table 2-4 Functional Analysis and Crosswalk to Requirements for ACV and DVP System Functions 27

Table 2-5 Effluent Management Facility Interfaces 29

Table 2-6 DEP System Interfaces 33

Table 2-7 DVP System Interfaces 38

Table 2-8 C1V System Interfaces 39

Table 2-9 ACV System Interfaces 39

Table 3-1 ICD-30 Transfer Pipeline Physical Characteristics 150

Table 3-2 ICD-30 Transfer Pipeline Design Pressure and Temperature 151
Table 3-3 ICD-31 Transfer Pipeline Physical Characteristics 153
Table 3-4 ICD-31 Transfer Pipeline Design Pressure and Temperature 154
Table 3-5 EMF Applicable Codes & Standards 165
Table 3-6 WTP Design Criteria, Guides, and General Specifications Applicable to EMF 167
Table 4-1 DFLAW Underground Waste Transfer Lines 202
Table 4-2 EMF Internal Design Conditions 205
Table 4-3 C1V System Equipment at the EMF 208
Table A-1 EMF Facility Test Objectives, Conditions, and Acceptance Criteria A-1
Table A-2 DEP System Test Objectives, Conditions, and Acceptance Criteria A-3
Table A-3 HVAC (ACV, DVP) System Test Objectives, Conditions, and Acceptance Criteria A-6

Figures

Figure 2-1 DFLAW Overview 9
Figure 2-2 Effluent Management Facility Context Diagram 10
Figure 2-3 DEP System Context Diagram 11
Figure 2-4 C1V System Context Diagram 12
Figure 2-5 ACV System Context Diagram 13
Figure 2-6 DVP System Context Diagram 14
Figure 2-7 Effluent Management Facility Functional Block Diagram 16
Figure 2-8 DEP System Functional Block Diagram 20
Figure 2-9 C1V System Functional Block Diagram 24
Figure 2-10 ACV and DVP Systems Functional Block Diagram 26
Figure 4-1 Simplified DEP System Overview 182
Figure 4-2 DEP Evaporator Separator Vessel 188
Figure 4-3 Sampling Station 198
Figure 4-4 DVP System Overview 203
Figure 4-5 Effluent Management Facility Location 209
Figure 4-6 LAW Effluent Electrical Building Conceptual Layout 211
Figure 4-7 LAW Effluent Utility Building Layout 212
Figure 4-8 LAW Effluent Process Building Layout 213
Figure 4-9 LAW Effluent Drain Tank Building Layout & Elevation 214
Figure 4-10 DEP System Process Overview 216

1 Introduction

1.1 Facility and System Identification

This facility design description (FDD) and system design description (SDD) document defines the technical and functional/performance requirements of the Hanford Tank Waste Treatment and Immobilization Plant (WTP) Effluent Management Facility (EMF), the Direct Feed Low-Activity Waste (DFLAW) EMF Process System (DEP), the DFLAW EMF Vessel Vent Process System (DVP), the Active Confinement Ventilation System (ACV), the C1 Ventilation System (C1V) at the EMF, and all underground waste transfer lines within the scope of the DEP system.

This document defines the US Department of Energy (DOE) Contract DE-AC27-01RV14136 (WTP Contract) requirements, waste acceptance criteria, feed and effluent transfer systems, regulatory compliance requirements, and authorization basis requirements for the EMF as currently known and understood. This document describes the operating modes pertinent to the EMF.

1.2 Limitations and Scope

The scope of this document is to provide an authoritative source for the collected set of requirements applicable to the EMF, all internal process systems within the EMF, and all waste transfer lines within the scope of the DEP system. The integrated FDD/SDD is prepared in accordance with 24590-WTP-3DP-G04B-00093, *System and Facility Design Descriptions*. The intended use of these collected requirements is to establish the following:

- Inform the overall facility and system design effort.
- Provide a validated basis upon which to confirm implementation of design requirements.
- Provide the expected means of verification for requirements, including those that are post-construction (i.e., startup and commissioning test objectives and acceptance criteria).

All requirements established in this document are intended to be verified as implemented in design and/or physical configuration using a graded approach commensurate with importance and risk.

Where numeric values are provided within requirements in Section 3, these values are provided without additional margin. For example, if a value is established in 24590-WTP-DB-ENG-01-001, *Basis of Design* (BOD), no attempt is made to remove any margin that may or may not have gone into the establishment of that value, nor has any margin been added. Where values are stated as minimums or maximums, there is no expectation that any additional margin be applied in the verifications that the design requirements have been met. Testing required to be performed in accordance with external codes and standards must follow the rules established in those documents.

This document is intended to be used in support of design development, design verification, turnover, start-up testing, and commissioning activities. This document is intended to be maintained current relative to changes to source requirements documents. Updates shall be made concurrent with changes to source requirements or implementation, or shall be tracked for completion in accordance with 24590-WTP-GPG-ENG-0170, *Impact Evaluation.*

Engineers are expected to be able to use the requirements in Section 3 of this document as input for design development without recourse to the upper-tier source documents or searches of the Technical Requirements

Management System supported by Technical Requirements Search Application. Design engineers are still required to ensure that requirements contained within the discipline/functional standards incorporated by reference in Section 3 are followed. These documents contain additional criteria that are based on applications of external codes/standards, corporate best practices, and engineering management expectations for a consistent approach to design.

Certain requirement statements in this document are preceded by a [**HOLD**] notation. This notation is used when there are unresolved technical issues, known inconsistencies among source requirements, or other management suspensions of work requiring resolution. Requirements with the [**HOLD**] notation may be used to proceed with preliminary or committed design but shall not be used in support of fabrication or construction until the [**HOLD**] is removed.

The contents of Section 4, *System Description*, are being developed in a phased approach in support of future operations and maintenance. At this revision, only the contents of Section 4.1.1 through 4.1.6 have been updated and verified. Sections 4.2.1 through 4.2.6, 4.3, and 4.4 are reserved during this phase and will be updated in a later phase after work to support completion of these sections has been completed.

1.3 Ownership and Maintenance

The Design Authority (DA) organization is responsible for the preparation and maintenance of this document through turnover of the included systems to Operations. Thereafter, maintenance of this document is the responsibility of the Plant Engineering organization; however, the Engineering DA organization retains responsibility for the establishment and definition of design requirements.

1.4 Definitions/Glossary

Confinement – For consistency - regardless of usage elsewhere - confinement is used in this document to denote the controls used to prevent or minimize the release or migration of airborne contaminants, including aerosols, hazardous vapors, or gases.

Containment – For consistency - regardless of usage elsewhere - containment is used in this document to denote the controls used to prevent or minimize the release or migration of liquid or liquid-entrained contaminants.

Miscellaneous Unit – A dangerous waste management unit where dangerous waste is treated, stored, or disposed of and that is not a container, tank, surface impoundment, pile, land treatment unit, landfill, incinerator, boiler, industrial furnace, underground injection well with appropriated technical standards under 40 CFR Part 146, containment building, corrective action management unit, temporary unit, staging pile, or unit eligible for a research, development, and demonstration permit under Washington Administrative Code (WAC) 173-303-809.

Passive components – Components with no moving parts or active controls (e.g., vessels, piping, ductwork, electrical raceways, hangers and supports, building structure, etc.).

Primary confinement – Structures, systems, or components (SSCs) and their associated boundaries that confine airborne contaminants, including aerosols, hazardous vapors, or gases, under normal conditions.

Primary containment – Structures, systems, or components (SSCs) and their associated boundaries that contain liquid or liquid-entrained contaminants under normal conditions.

Secondary confinement – Structures or other design features that capture and prevent further spread or migration of airborne contaminants, including aerosols, hazardous vapors, or gases, after they have escaped primary confinement.

Secondary containment – Structures or other design features that capture and prevent further spread or migration of liquid or liquid-entrained contaminants after they have escaped primary containment.

Tank system – A dangerous waste storage or treatment tank and its associated ancillary equipment and containment system.

Tertiary confinement– Structures or other design features that capture and prevent further spread or migration of airborne contaminants, including aerosols, hazardous vapors, or gases, after they have escaped secondary confinement.

Tertiary containment– Structures or other design features that capture and prevent further spread or migration of liquid or liquid-entrained contaminants after they have escaped secondary containment.

Vessel – An engineering term denoting a storage unit with a more robust construction than a typical mixed waste storage or treatment tank. Within the context of this document, a vessel is defined as any component or item of equipment that contains "-VSL-" as part of its component tag number.

1.5 Acronyms and System Designators

1.5.1 Acronyms

ACU	air conditioning unit
ADR	ALARA design review
AHU	air handling unit
ALARA	as low as reasonably achievable
ASD	adjustable speed drive
BARCT	best available radionuclide control technology
BOD	*Basis of Design*
BOF	Balance of Facilities
COM	Commissioning
COR	Code of Record
C&I	control and instrumentation
CCN	correspondence control number
DA	design authority
D&D	decontamination and decommissioning
DBA	design basis accident
DFLAW	Direct Feed Low-Activity Waste
DST	double-shell tank
DWP	*Dangerous Waste Permit*
DX	direct expansion
EAC	effluent acceptance criteria
EC	evaporative cooling

EMF	Effluent Management Facility
ENG	Engineering
EPC	Engineering, Procurement, and Construction
ETF	Effluent Treatment Facility
FCR	facility control room
FCU	fail coil unit
FDD	facility design description
GTC	general test criteria
HC	hazard category
HEPA	high-efficiency particulate air
HLW	High-Level Waste (Facility)
IBC	*International Building Code*
ICD	interface control document
ICN	Integrated Control Network
IDLH	immediately dangerous to life and health
IFC	*International Fire Code*
IQRPE	independent, qualified, registered professional engineer
Lab	Analytical Laboratory
LAW	Low-Activity Waste (Facility)
LCO	limiting condition for operation
LERF	Liquid Effluent Retention Facility
NFPA	National Fire Protection Association
NPH	natural phenomenon hazard
OPS	Operations
ORD	*Operations Requirements Document*
P&ID	piping and instrumentation diagram
PC	performance category
PT	Pretreatment (Facility)
SBS	submerged bed scrubber
SC	safety class
SC-IV	seismic category-IV
SCR	standby control room
SDD	system design description
SRD	*Safety Requirements Document, Volume II*
SS	safety significant
SSC	structure, system, and component
TAC	test acceptance criteria
TOC	Tank Operations Contractor
UBC	*Uniform Building Code*
VOIP	Voice Over Internet Protocol
WAC	Washington Administrative Code
WDOH	Washington State Department of Health
WTP	Hanford Tank Waste Treatment and Immobilization Plant

1.5.2 System Designators

ACV	active confinement ventilation system
AFR	antifoam reagent system
BSA	breathing service air system
C1V	C1 ventilation system
CME	communications electrical system
DEP	DFLAW effluent management facility process system
DIW	demineralized water system
DOW	domestic (potable) water system
DVP	DFLAW effluent management facility vessel vent process system
EMJ	environmental monitoring system
FDE	fire detection and alarm system
FNJ	facility network infrastructure system
FPW	fire protection water system
GRE	grounding and lightning protection electrical system
HPS	high pressure steam system
HTE	heat trace electrical system
ISA	instrument service air system
LCP	LAW concentrate receipt process system
LPS	low pressure steam system
LTE	lighting electrical system
LVE	low voltage electrical (480/208/120 V) system
LVP	LAW secondary offgas and vessel vent process system
MVE	medium voltage electrical (13.8/4.16 kV) system
NLD	nonradioactive liquid waste disposal system
PCJ	process control system
PCW	plant cooling water system
PSA	plant service air system
PSW	process service water system
PWD	plant wash and disposal system
RLD	radioactive liquid waste disposal system
SCW	steam condensate water system
SDJ	stack discharge monitoring (radioactive and nonradioactive) system
SHR	sodium hydroxide reagent system
SNR	sodium nitrite reagent system
TCP	treated LAW concentrate storage process system
TLP	treated LAW evaporation process system
UPE	uninterruptible power electrical system

2 General Overview

The Low-Activity Waste (LAW) Facility receives treated low-activity waste for vitrification from the following:

- The WTP Pretreatment (PT) Facility in the baseline configuration
- The Tank Operations Contractor (TOC) in the DFLAW configuration

In the DFLAW configuration, treated low-activity waste from the TOC is transferred to the LAW Facility via a direct underground transfer line, as illustrated in Figure 2-1. The characteristics of the waste feed conveyed from the TOC to the LAW concentrate receipt process system (LCP) are governed by 24590-WTP-ICD-MG-01-030, *ICD 30 – Interface Control Document for Direct LAW Feed*. The TOC samples the waste at Tank Farms and is granted permission for transfer to the LAW Facility pending confirmation of the feed sample characteristics by WTP. Once transfer permission is granted, the feed is transferred to the LCP system. The underground transfer line runs between the interface point at Node 13 of the site boundary and the existing transfer line from the PT Facility to the LAW Facility. The tie-in with this existing line occurs within the LAW Facility. The portion of the transfer line between the site boundary interface point and the battery limit of the LAW Facility is within the scope of the DEP system. This transfer line also includes a tie-in point at the EMF used to recycle concentrated effluent from the DEP system and to add sodium hydroxide from the sodium hydroxide reagent (SHR) system for corrosion mitigation in the pipe. Isolations for waste feed from the TOC and concentrated effluent return to the LCP system from EMF, as well as the monitoring equipment associated with the transfer of the waste feed, are within the scope of the DEP system. The DFLAW configuration is independent of the baseline configuration and is only used prior to PT Facility startup or in the event of a prolonged PT Facility outage.

The liquid effluents accumulated in the LAW radioactive liquid waste disposal system (RLD) vessels and the LAW secondary offgas/vessel vent process system (LVP) tank that are routed to the PT Facility in the baseline configuration are diverted to the DEP system for the DFLAW configuration, as illustrated in Figure 2-1. Valves, spools, flanges, and other isolation features in the LAW Facility divert the effluents to either the PT Facility or the EMF. The liquid accumulated in the Analytical Laboratory (Lab) C3 radioactive liquid waste disposal system (RLD) vessel that is normally routed to the PT Facility in the baseline configuration is also diverted to the DEP system for the DFLAW configuration. Transfer lines used for the delivery of liquid effluents from the LAW Facility and Lab to the EMF are within the scope of the LAW RLD, Lab RLD, and LAW LVP systems. The boundary between the LAW RLD, Lab RLD, and LAW LVP systems and the DEP system are described in Section 2.3, *Basic Operational Overview*.

Once the EMF receives secondary effluents from the LAW Facility and Lab, the DEP system concentrates the effluent through the removal of water content. The concentrated effluent is collected in storage vessels and is held for return to the LCP system for vitrification. Alternatively, in off-normal scenarios, the DEP system includes the capability to transfer the concentrate to Tank Farms, in accordance with the requirements of 24590-WTP-ICD-MG-01-031, *ICD 31 – Interface Control Document for DFLAW Effluent Returns to Double-Shell Tanks*, or to a tanker truck (following an as low as reasonably achievable [ALARA], viability, and safety study). The transfer lines between the TOC and the LAW Facility and between the EMF and Tank Farms are flushed and drained following effluent transfers. Dilute effluent, which is comprised primarily of the water content removed from the effluent stream via an evaporation/condensation cycle, is also collected in storage vessels and is held for transfer from the WTP to the Liquid Effluent Retention Facility (LERF)/Effluent Treatment Facility (ETF). Transfers of dilute effluent to LERF/ETF are executed in accordance with 24590-WTP-ICD-MG-01-006, *ICD-06 – Interface Control Document for Radioactive, Dangerous Liquid Effluents*. The entire transfer line between the EMF and the site boundary, as well as the leak detection box located at the site boundary, is within the scope of the DEP system until completion of the PT Facility.

All buildings (inclusive of most SSCs) within the EMF are non-safety, seismic category-IV (SC-IV). The risk to the public or co-located worker due to an accident or release of the material at risk within the EMF is sufficiently low that no controls have been elevated to safety class (SC) or safety significant (SS) to protect against such accidents/releases. The one exception is the SS sodium hydroxide delivery pressure relief valve in the SHR system. However, this component is a standalone unit that does not interface with any other EMF systems and is covered in the scope of 24590-WTP-3ZD-SHR-00001, *System Design Description for the WTP Process Reagent Systems (AFR, MXR, NAR, SHR, SNR, SPR, STR)*. The EMF (inclusive of all SSCs) is also a hands-on maintenance facility, meaning no remote features are required for decontamination and no remote manipulation is required for maintenance or inspection.

The EMF consists of four buildings. The LAW effluent process building (Building 25) houses the main DEP and DVP system process equipment and is where radiological liquid effluent is collected and processed. The LAW effluent drain tank building (Building 25A) houses the low-point drain vessel and its associated supporting equipment. The LAW effluent utility building (Building 26) houses HVAC equipment and various Balance of Facilities (BOF) utility system equipment. The LAW effluent electrical building (Building 27) houses the EMF electrical equipment, the uninterruptible power electrical system (UPE) batteries, and controls and instrumentation (C&I) equipment. The following general design objectives are applied to the overall facility layout, arrangement of internal processing areas, and design of the facility envelope.

- The facility provides the required process, utility, logistical, and other interfaces needed to carry out its operational mission and support activities.
- The facility provides space, structural support, and anchorage for processes, utilities, and maintenance equipment, and activities.
- The facility protects processes, utilities, and maintenance equipment from natural phenomena and accident conditions, using a graded approach, mission importance, and risk associated with the SSCs.
- The facility provides the enclosure and enclosure integrity to allow for environmental control of temperature, humidity, and pressure within the various spaces of the facility.
- The facility provides a roof, walls, floors, anchors, and liners designed with the capability to help prevent or mitigate the release of hazardous wastes.
- The facility layout provides space for operations, maintenance, radiological control, and other support functions.
- The facility design meets ALARA objectives to limit personnel exposure to hazardous or sensitive work areas and equipment, as well as to provide shielding to protect workers.
- The facility design provides the space needed to manage solid secondary waste generated by processes, utilities, and operational or maintenance activities.
- The facility is designed as a process facility in accordance with 24590-WTP-COR-MGT-15-00001, *Engineering, Procurement, Construction (EPC) Code of Record*.
- The EMF provides a level of fire protection that is sufficient to fulfill the requirements of the best protected class of industrial risks ("Highly Protected Risk", per DOE G 420-1.3) and provides protection to achieve defense-in-depth. Defense-in-depth shall be achieved when a balance of each of the following elements is provided:
    - Rapidly detecting fires and promptly controlling and extinguishing those fires that do occur, thereby limiting damage and consequences.
    - Providing a level of fire protection for SSCs so that a fire that is not promptly extinguished will not prevent essential facility functions from being performed.

The HVAC systems supply conditioned air to each building. The EMF facility uses a cascading ventilation system in process and utility areas wherein air cascades from areas of less potential for contamination to areas of greater potential for contamination. A brief description of the ventilation system design (including the C1V system, the ACV system, and the DVP system) is provided in Section 2.3.

The following figures and tables represent an overall view of the EMF functions relative to new and existing facilities, interfaces with existing systems, and new or modified systems. The functional analysis is provided to help ensure there is full understanding and agreement on the systems functions that need to be supported by the designs. Figure 2-1 is an overview of the overall process flow as it relates to the EMF systems and facilities. Figure 2-2 is a context diagram for the EMF used in support of functional and performance definition at the facility level. Figure 2-3 is a context diagram for the DEP system within the LAW effluent process and LAW effluent drain tank buildings. Figure 2-4 is the context diagram for the C1V system, Figure 2-5 is the context diagram for the ACV system, and Figure 2-6 is the context diagram for the DVP system. These diagrams are provided in support of the subsequent functional block diagrams and tables, which provide further description and breakdown of the functions.

Figure 2-1 DFLAW Overview

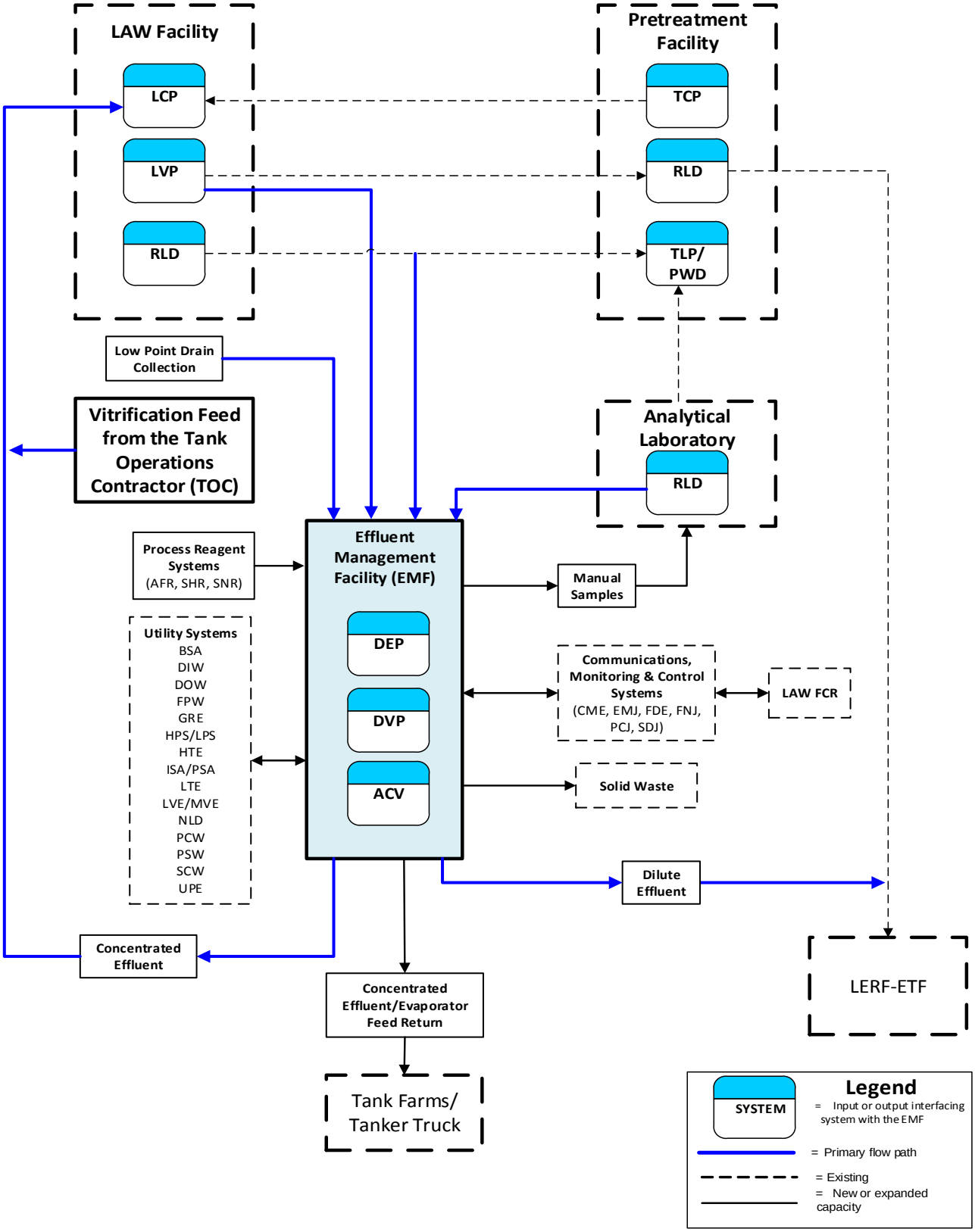

Figure 2-2 Effluent Management Facility Context Diagram

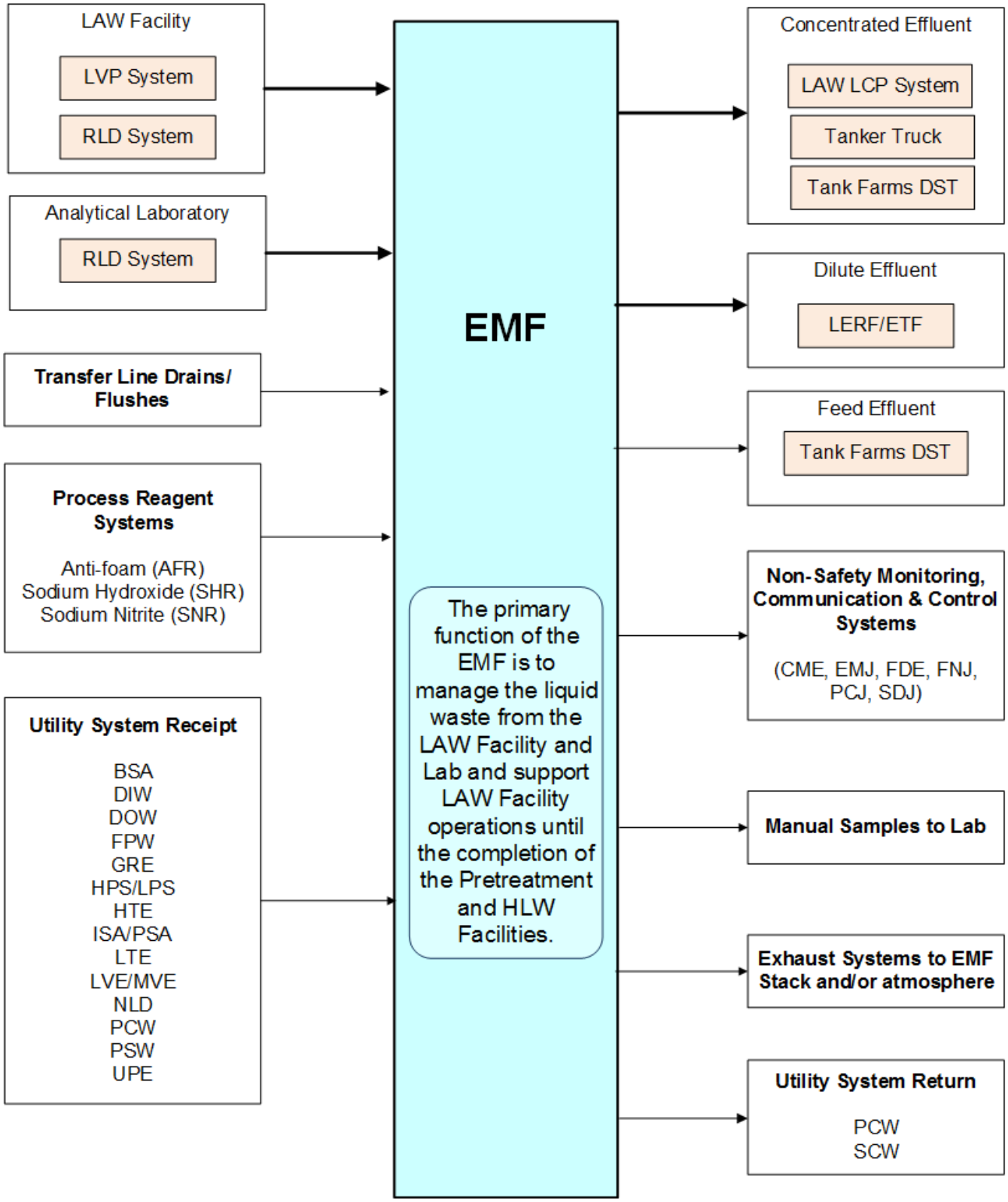

Figure 2-3 DEP System Context Diagram

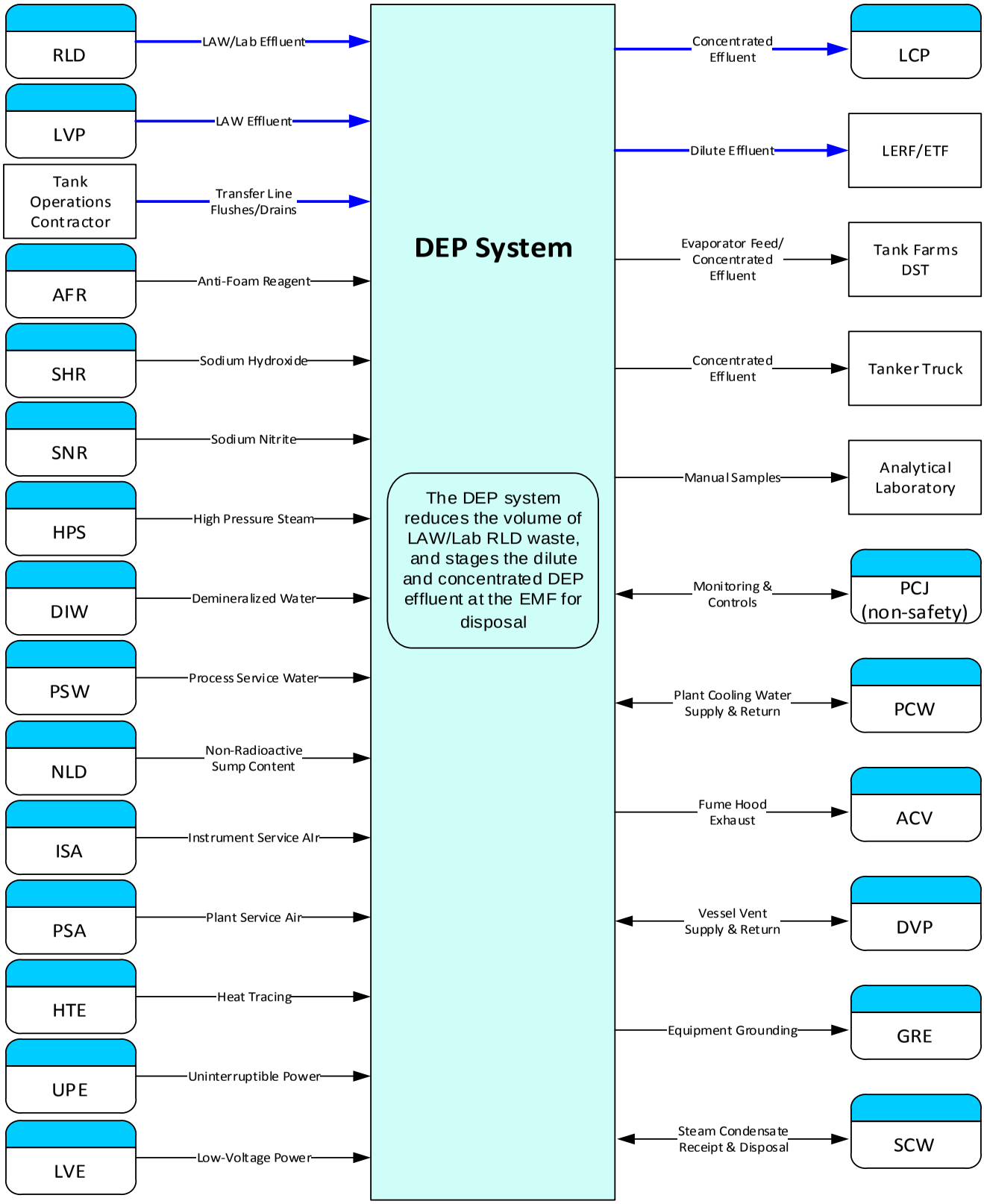

Figure 2-4 C1V System Context Diagram

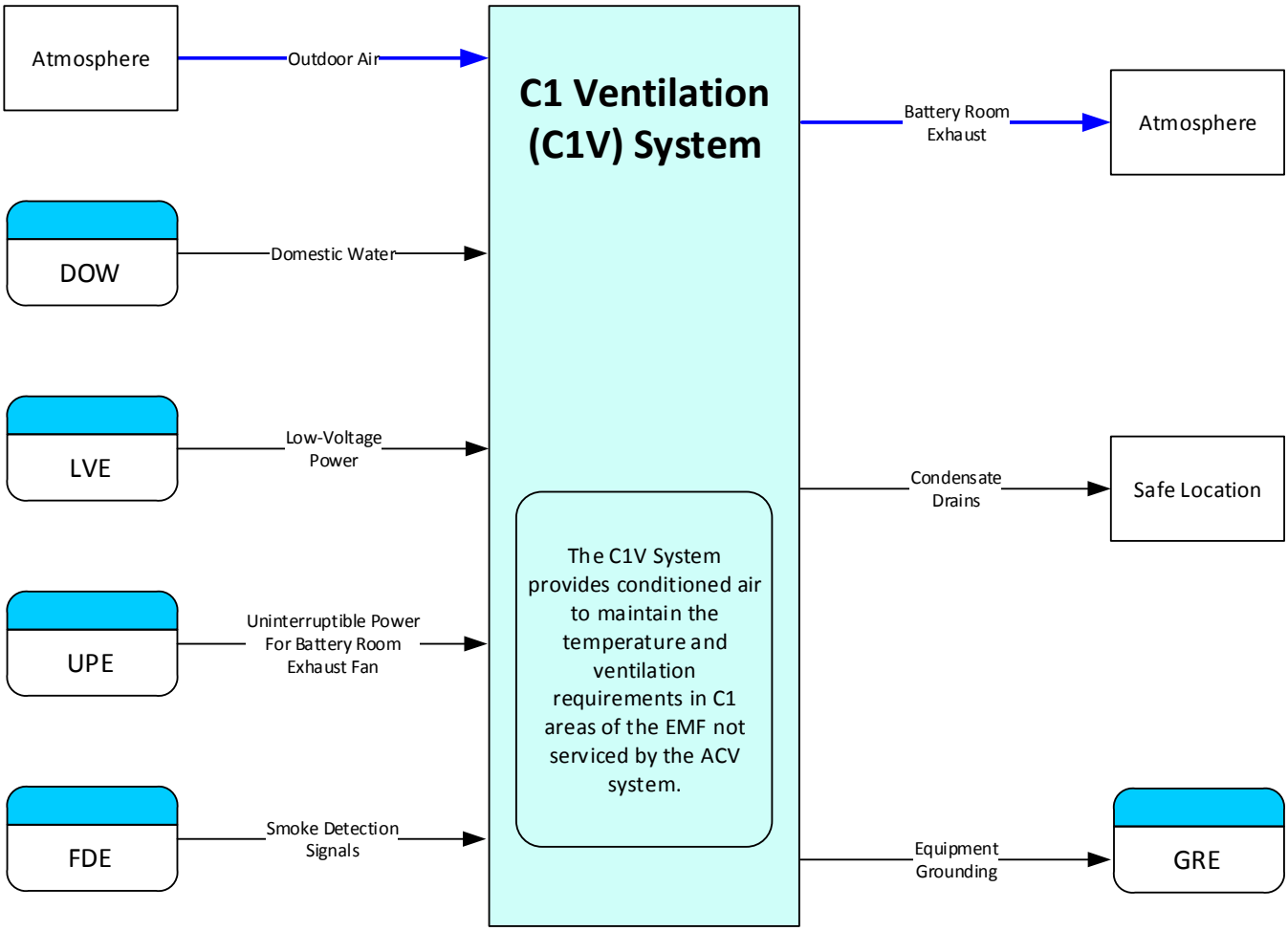

Figure 2-5 ACV System Context Diagram

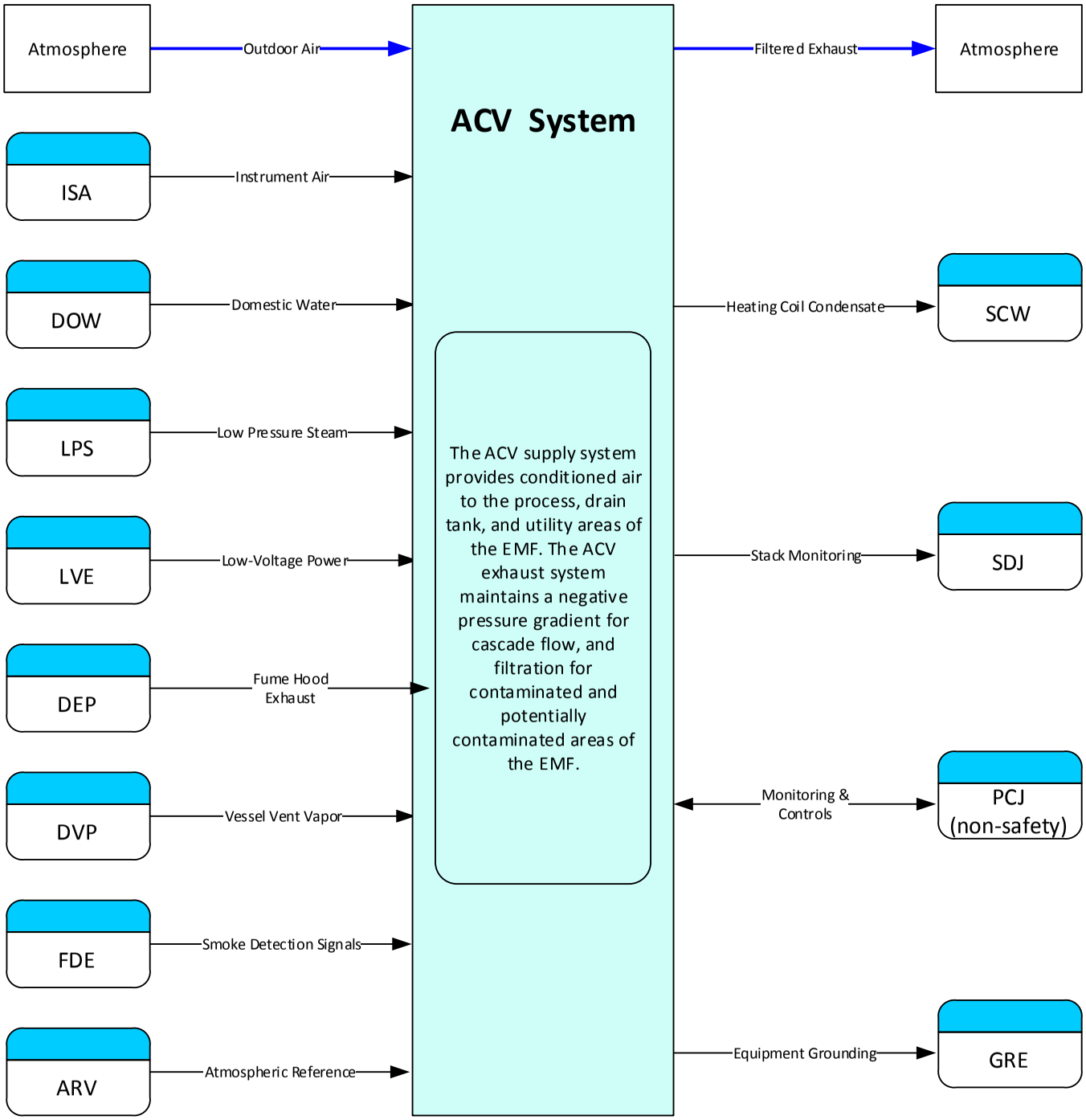

Figure 2-6 DVP System Context Diagram

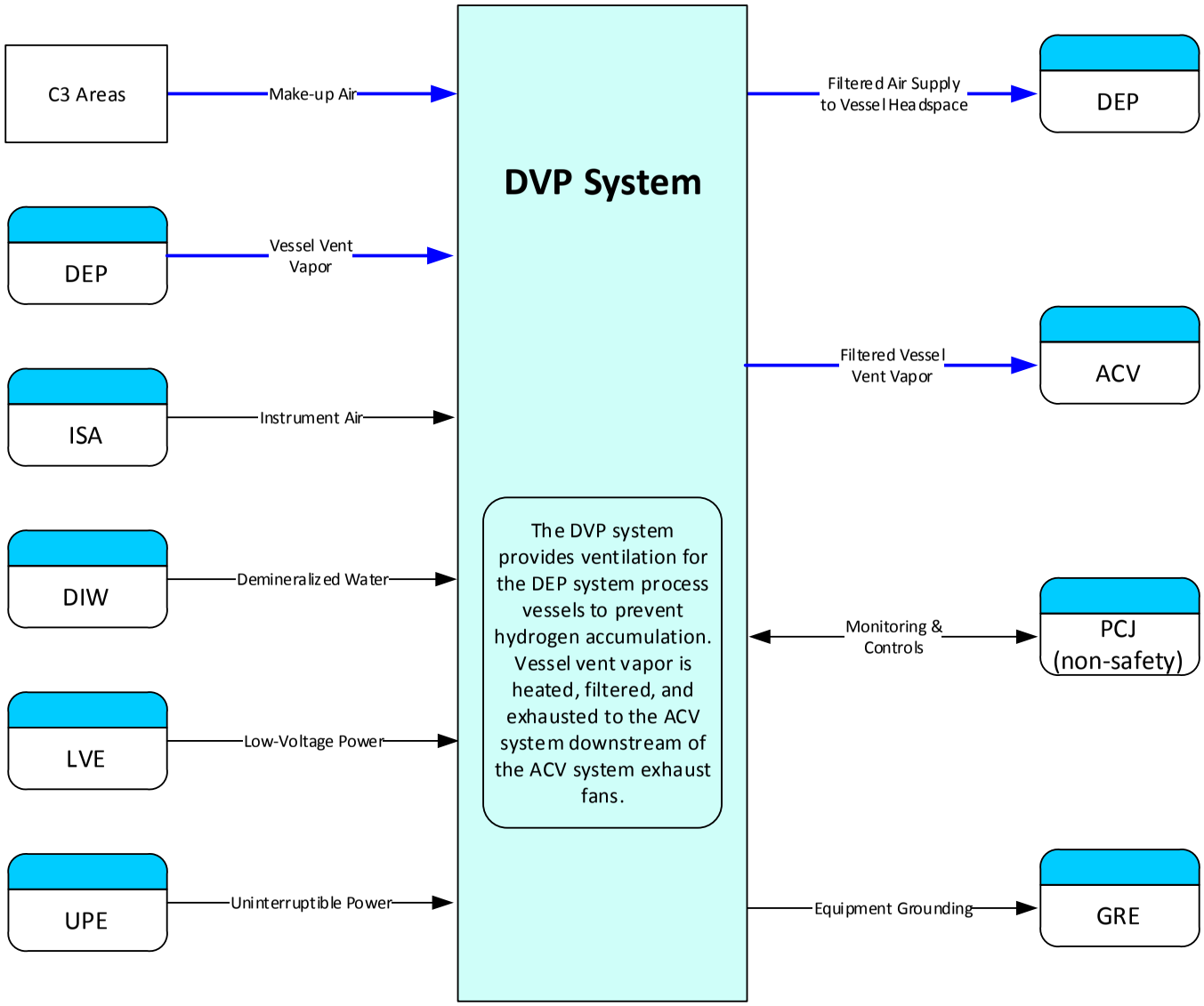

2.1 System Functions/Safety Functions

This section defines the EMF and ACV, C1V, DEP, and DVP system functions and attributes that need to be addressed by the facility and system design. Section 3 provides the design and performance requirements to meet both functional and other requirements. System interfaces are provided for reference only. Refer to Section 1.5.2 for the list of relevant system designators.

The following figures and tables provide the functional analyses for the individual systems within the overall DFLAW configuration. Figure 2-7 shows the EMF functional block diagram, indicating the internal and external systems and utilities that provide the primary support or interface for that function. Section 3 provides the design requirements to meet both functional and other requirements.

Figure 2-7 Effluent Management Facility Functional Block Diagram

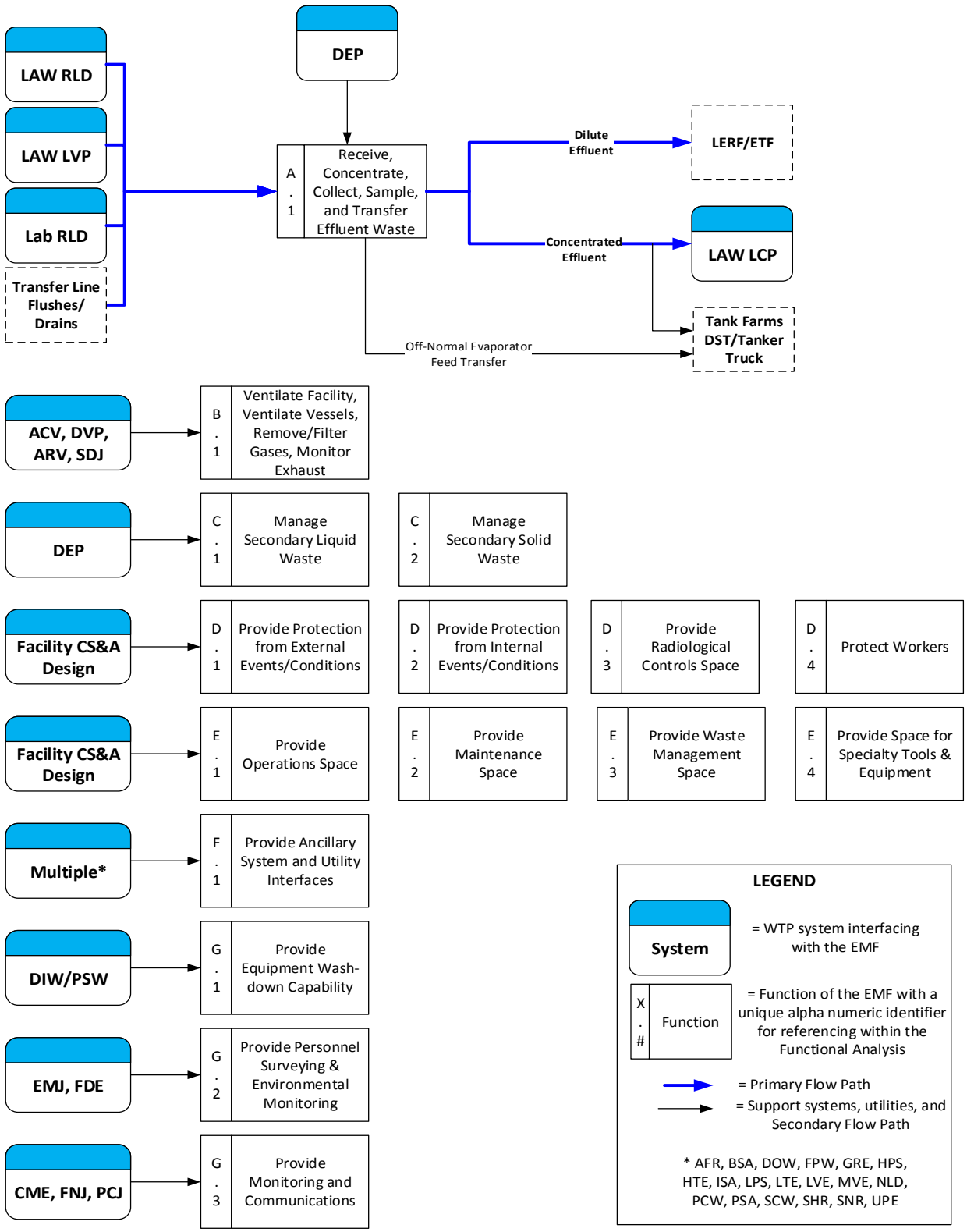

The functions included in Figure 2-7 and further described in Table 2-1 are the preliminary and secondary level functions of the EMF. Where appropriate to support the definition of functional and design requirements, functions have been further decomposed and additional levels of supporting functions are also described. The requirement section number provides the location of the applicable functional analysis incorporated into system requirements.

Table 2-1 Functional Analysis and Crosswalk to Requirements for EMF Functions

Reference	Functional Analysis Description	Requirement Section No.
A.	**Manage Effluent Waste**	**N/A**
A.1	Receive, Concentrate, Collect, Sample, and Transfer Effluent Waste - The EMF provides the facilities necessary to receive, concentrate, collect, sample, and transfer effluent waste.	3.4.1.1.1 3.4.4.1 3.4.4.2 3.4.4.4
B.	**Ventilate Facility, Remove or Treat Gases, and Monitor Exhaust**	**N/A**
B.1	Ventilate Facility, Ventilate Vessels, Remove/Filter Gases, Monitor Exhaust – The EMF provides ventilation of facility areas and process vessels to control the spread of contamination, prevent the build-up of hazardous gases, and maintain environment conditions in facility areas. Facility exhaust is monitored for compliance with nuclear safety, ALARA, environmental, and regulatory requirements.	3.4.3.3.1 3.4.3.3.14
C.	**Manage Waste**	**N/A**
C.1	Manage Secondary Liquid Waste – The EMF provides the capability to manage and disposition secondary liquid wastes (e.g., liquids collected in sumps) for compliance with secondary containment provisions of the Dangerous Waste Permit (DWP), nuclear safety, ALARA, environmental, and regulatory requirements.	3.4.3.3.2 3.4.3.3.3 3.4.3.3.4 3.4.3.3.5 3.4.3.3.6 3.4.3.3.7 3.4.3.3.8 3.4.3.3.9 3.4.3.3.10 3.4.3.3.11 3.4.5.2.1 3.4.6.1.1
C.2	Manage Secondary Solid Waste – The EMF provides the capability to manage and disposition secondary solid waste wastes (e.g., pumps, filter media, spent reagents) for compliance with secondary waste management provisions of the DWP, nuclear safety, ALARA, environmental, and regulatory requirements.	3.4.5.5.1 3.4.6.1.2

Reference	Functional Analysis Description	Requirement Section No.
D.	**Support Safety and Environmental Containment/Confinement Requirements**	**N/A**
D.1	Provide Protection from External Events/Conditions – The EMF structure provides protection/survivability for SSCs from external natural phenomena hazard (NPH) / external design basis accident (DBA) events/conditions.	3.4.2.1.1 3.4.2.2.1 3.4.2.2.4 3.4.2.2.5 3.4.3.3.1 3.4.4.9 3.4.6.4.17
D.2	Provide Protection from Internal Events/Conditions – The EMF interior design includes features that provide protection/survivability for SSCs from internal DBA events/conditions.	3.4.2.3.1 3.4.2.3.3 3.4.3.3.1 3.4.4.9
D.3	Provide Radiological Controls Space – The EMF provides radiological controls space to support radiological activities in facility areas.	3.4.3.2.1 3.4.3.2.5
D.4	Protect Workers – The EMF provides the capability to protect workers by minimizing exposure to radiological sources, to the greatest extent practicable, in accordance with ALARA principles of design. Shielding is provided to ensure worker dose rates are within acceptable limits and ALARA.	3.4.3.2.2 3.4.3.2.3 3.4.3.2.4 3.4.3.2.5 3.4.3.2.6 3.4.3.2.7 3.4.3.3.3 3.4.3.3.4 3.4.3.3.5 3.4.3.3.6 3.4.3.3.7 3.4.3.3.8 3.4.3.3.9 3.4.3.3.10 3.4.3.3.11 3.4.3.3.14 3.4.3.3.15
E.	**Support Operations and Maintenance**	**N/A**
E.1	Provide Operations Space – The EMF provides space to accommodate operational functions and associated SSCs, including clearances and access for anticipated operating activities.	3.4.5.5.1 3.4.5.5.13 3.4.5.6.1
E.2	Provide Maintenance Space – The EMF provides space to accommodate maintenance activities for SSCs where maintenance is required, including clearances and access for anticipate maintenance activities.	3.4.5.5.1 3.4.5.6.1

Reference	Functional Analysis Description	Requirement Section No.
E.3	Provide Waste Management Space – The EMF provides space to accommodate waste management activities (e.g., waste accumulation, handling, packaging, surveying, and staging).	3.4.5.5.1 3.4.6.1.2
E.4	Provide Space for Specialty Tools & Equipment – The EMF provides space for specialty tools and support equipment (e.g., specialty carts for equipment transfer, and below-the-hook lifting devices).	3.4.5.5.1 3.4.5.5.5 3.4.5.5.20
F.	**Support Ancillary and Utility System Interfaces**	**N/A**
F.1	Provide Ancillary and Utility System Interfaces – Other WTP systems supporting facility operations, including internal distribution and support systems, are integrated into the design of the EMF.	3.4.4.7 3.4.4.8 3.4.5.5.3 3.4.6.1.3
G.	**Support Equipment Decontamination, Monitoring, Controls, Communications, and Protection**	**N/A**
G.1	Provide Wash-down Capability – The EMF provides the capability to flush, rinse, and wash-down equipment and surfaces to lower dose rates to workers to support contact maintenance in the facility.	3.4.3.2.2 3.4.5.5.11
G.2	Provide Personnel Surveying & Environmental Monitoring – The EMF provides personal surveying and environmental monitoring to monitor radiation and contamination levels within the facility.	3.4.3.2.1 3.4.3.3.15
G.3	Provide Monitoring and Communications – The EMF provides monitoring and communications to ensure worker safety and support the effluent treatment process.	3.4.3.2.5 3.4.5.3.1 3.4.5.3.2 3.4.5.3.3 3.4.5.4.1

Figure 2-8 provides the functional block diagram for the DEP system, indicated the internal and external systems and utilities that provide the primary support or interface for that function. Section 3 provides the design requirements to meet both functional and other requirements. System interfaces are provided for reference only.

Figure 2-8 DEP System Functional Block Diagram

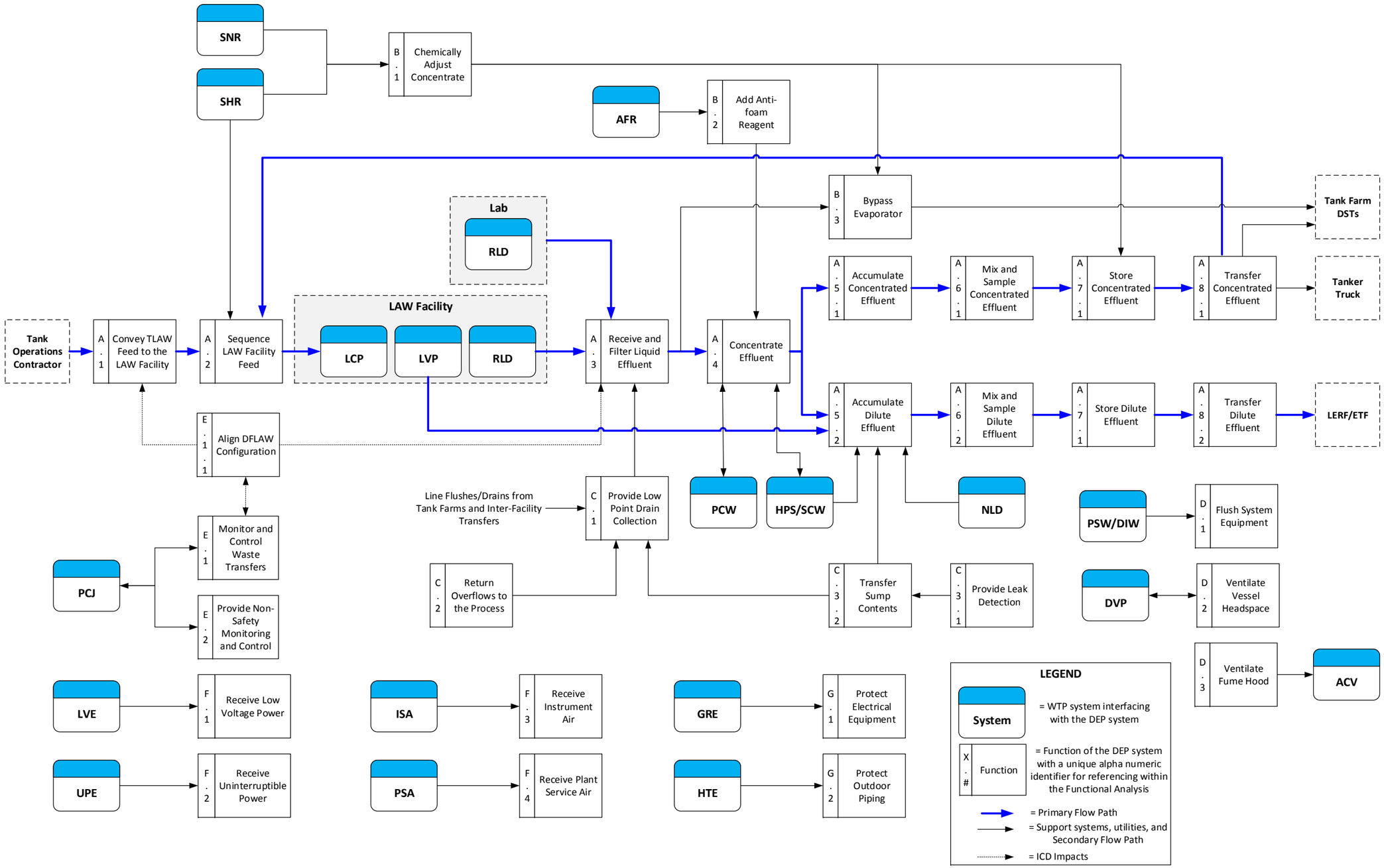

The functions included in Figure 2-8 and further described in Table 2-2 are the preliminary and secondary level functions of the DEP system. Where appropriate to support definition of functional and design requirements, functions have been further decomposed and additional levels of supporting functions are also described. The requirement section number provides the location of the applicable functional analysis incorporated into system requirements. Section B.1 provides a further decomposition of system functions, including initiating, terminating, and integrating events and functions.

Table 2-2 Functional Analysis and Crosswalk to Requirements for DEP System Functions

Reference	Functional Analysis Description	Requirement Section No.
A.	**Receive, Concentrate, Sample, and Transfer Effluent**	**N/A**
A.1	Convey Treated Low-Activity Waste Feed to the LAW Facility – The DEP system provides the capability to transfer treated feed from the TOC to the LAW Facility.	3.14.1.2.1 3.14.1.2.2 3.14.1.2.3 3.14.1.2.4
A.2	Sequence LAW Facility Feed – The sequenced transfer system to the LCP system is designed to alternate TOC treated feed and DEP system recycled feed.	3.15.1.2.7
A.3	Receive and Filter Liquid Effluent – The DEP system receives and filters waste streams including radioactive mixed waste effluents from the LAW RLD system, the Lab RLD system, and line flushes/drains from Tank Farms and inter-facility transfers.	3.5.1.1.2 3.5.4.16
A.4	Concentrate Effluent – The DEP system has the capability to process the waste stream and produce both concentrate and dilute mixed waste effluent.	3.5.1.1.5
A.5	Accumulate Effluents	N/A
A.5.1	Accumulate Concentrated Effluent – The DEP system collects concentrate for further treatment or to recycle to the LAW Facility.	3.6.1.1.2
A.5.2	Accumulate Dilute Effluent – The DEP system collects dilute evaporator effluent and scrubber effluent from the LVP system.	3.6.1.1.2
A.6	Mix and Sample Effluents	N/A
A.6.1	Mix and Sample Concentrated Effluent – Evaporator concentrate is sampled to determine if the acceptance criteria are met for transfers.	3.5.4.8 3.6.6.1.1
A.6.2	Mix and Sample Dilute Effluent – Dilute evaporator condensate is sampled to determine if the acceptance criteria are met for disposal to LERF/ETF.	3.5.4.8 3.6.6.1.1
A.7	Store Effluent	N/A
A.7.1	Store Concentrated Effluent – The DEP system provides a minimum of 48 hours of concentrated effluent storage capacity.	3.6.1.1.1
A.7.2	Store Dilute Effluent – The DEP system provides a minimum of 48 hours of dilute effluent storage capacity	3.6.1.1.1

Reference	Functional Analysis Description	Requirement Section No.
A.8	Transfer Effluent	N/A
A.8.1	Transfer Concentrated Effluent – The DEP system transfers evaporator concentrate to the LAW Facility, Tank Farms, or a tanker truck.	3.5.1.1.4 3.6.4.1.2 3.14.1.3.1 3.14.1.3.2 3.14.1.3.3 3.14.1.3.4
A.8.2	Transfer Dilute Effluent – The DEP system transfers evaporator condensate to LERF/ETF.	3.6.4.1.3 3.14.1.4.1 3.14.1.4.2 3.14.1.4.3
B.	**Adjust Effluent Characteristics**	**N/A**
B.1	Chemically Adjust Effluent – The DEP system adds sodium hydroxide and sodium nitrite from the SHR and SNR systems to allow for transfer to Tank Farms or the LCP system.	3.5.4.2 3.5.4.3
B.2	Add Anti-foam Reagent – The DEP system adds anti-foam reagent from the AFR system to minimize entrainment of aerosols with the overhead vapor.	3.6.2.1.2
B.3	Bypass Evaporator – The DEP system includes the capability to bypass the evaporator when it is unavailable.	3.6.2.1.3
C.	**Collect Drains, Flushes, Overflows, and Spills**	**N/A**
C.1	Provide Low Point Drain Collection – Overflows, spills, and line flushes/drains from Tank Farm and inter-facility transfer are routed to the low point drain vessel in the LAW effluent drain tank building.	3.5.1.1.2 3.6.1.2.1 3.14.1.1.2
C.2	Return Overflows to the Process – The vessel overflows are routed back to the waste treatment process.	3.6.1.2.1
C.3	Collect Leaks and Spills	N/A
C.3.1	Provide Leak Detection – The DEP system provides leak detection instrumentation to detect leaks in transfer lines and process area sumps.	3.6.5.4.4 3.7.1.1 3.15.1.1.1
C.3.2	Transfer Sumps Contents – The DEP system transfers sump contents in a timely manner.	3.6.4.1.1
D.	**Maintain Proper Operation of Equipment**	**N/A**
D.1	Flush System Equipment – The DEP system receives water from the PSW and DIW systems to flush system components.	3.5.4.5 3.6.1.4.1 3.6.5.4.2 3.14.1.1.3
D.2	Ventilate Vessel Headspace – The DEP system interfaces with the DVP system to purge hydrogen from the headspace of the DEP system vessels.	3.12.1.2

Reference	Functional Analysis Description	Requirement Section No.
D.3	Ventilate Fume Hood – The ACV system provides an exhaust path for the working space of the DEP system sampling station fume hood.	3.11.1.1.1
E.	**Provide Monitoring & Control Functions**	**N/A**
E.1	Monitor and Control Waste Transfers – The transfers of feed, concentrate, and dilute effluent are monitored and controlled in accordance with ICD-06, ICD-30, ICD-31, and the Dangerous Waste Permit (DWP).	3.15.1.1.1 3.15.1.2.1 3.15.1.2.2 3.15.1.2.3 3.15.1.2.4 3.15.1.2.5 3.15.1.2.6 3.15.1.3.1 3.15.1.3.2 3.15.1.3.3 3.15.1.3.4 3.15.1.4.1 3.15.1.4.2
E.1.1	Align DFLAW Configuration – The DEP system control logic includes the capability to route concentrated or dilute effluent to their intended destinations.	N/A
E.2	Provide Non-Safety Monitoring and Control – The process control system (PCJ) provides controls and interlocks necessary for continuous operation of DEP system SSCs and other facility status monitoring and control functions.	3.5.4.9 3.7.1.1 3.7.1.2.1 3.7.1.3.1
F.	**Receive Utilities**	**N/A**
F.1	Receive Low-Voltage Power – The low voltage electrical system (LVE) provides low-voltage power to DEP system SSCs as required.	N/A
F.2	Receive Uninterruptible Power – The UPE system provides uninterruptible power to DEP system SSCs as required	N/A
F.3	Receive Instrument Air – The instrument service air system (ISA) provides instrument air for remote valve actuation.	3.5.4.9
F.4	Receive Plant Service Air – The plant service air system (PSA) provides plant service air for pump operation, filter back-flush, and utility stations.	N/A
G.	**Protect System Equipment**	**N/A**
G.1	Protect Electrical Equipment – The grounding and lightning protection electrical system (GRE) provides grounding/lightning protection for DEP system electrical equipment.	3.4.4.9
G.2	Protect Outdoor Piping – The heat trace electrical system (HTE) provides heat tracing on outdoor piping. DEP system waste transfer lines are buried for freeze protection.	3.5.4.14 3.14.1.1.5

Figure 2-9 provides the functional block diagram for the C1V system, indicated the internal and external systems and utilities that provide the primary support or interface for that function. Section 3 provides the design requirements to meet both functional and other requirements. System interfaces are provided for reference only.

Figure 2-9 C1V System Functional Block Diagram

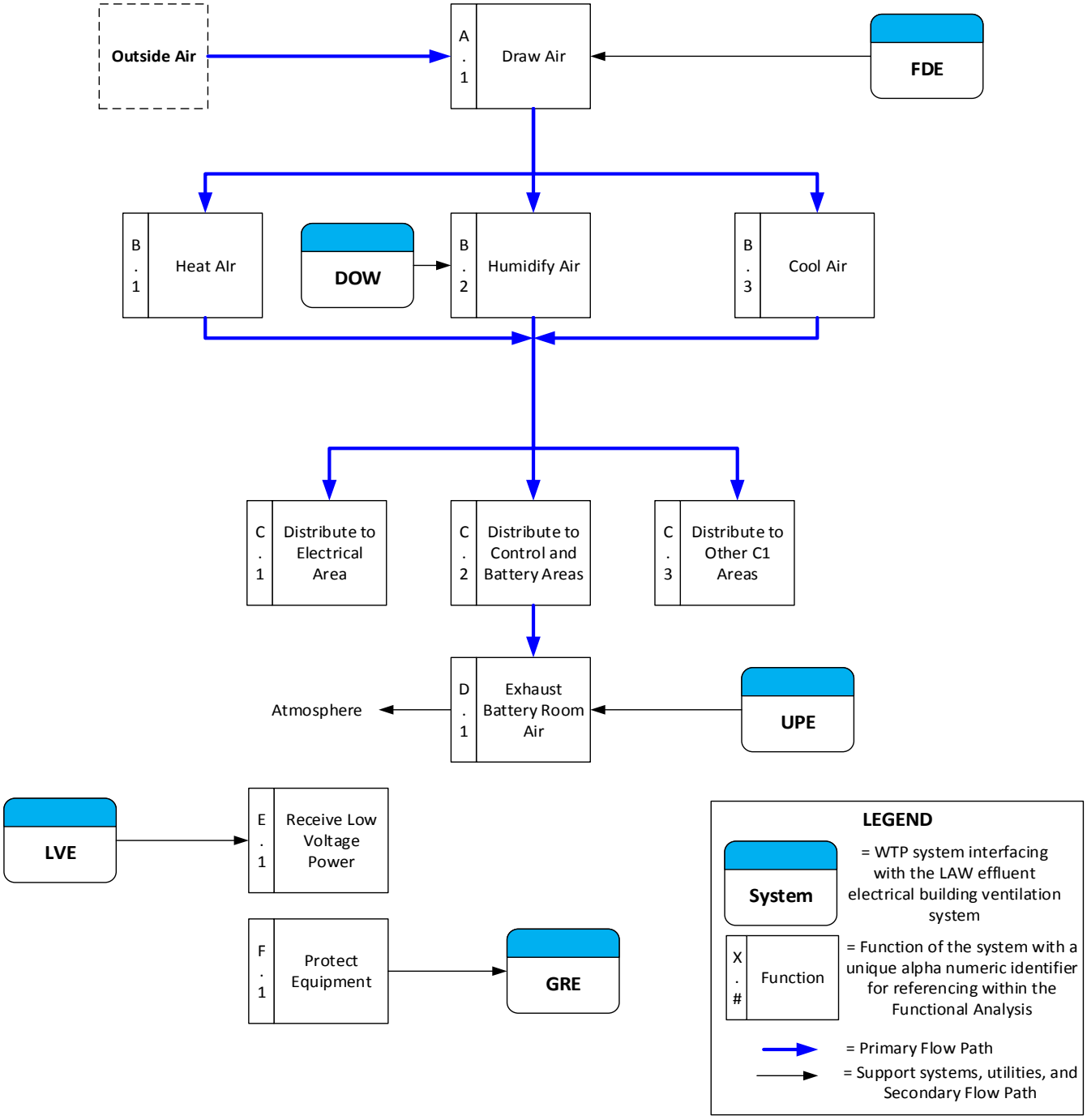

The functions included in Figure 2-9 and further described in Table 2-3 are the preliminary and secondary level functions of the C1V system. Where appropriate to support definition of functional and design requirements, functions have been further decomposed and additional levels of supporting functions are also described. The

requirement section number provides the location of the applicable functional analysis incorporated into system requirements. Section B.2 provides a further decomposition of system functions, including initiating, terminating, and integrating events and functions.

Table 2-3 Functional Analysis and Crosswalk to Requirements for C1V System Functions

Reference	Functional Analysis Description	Requirement Section No.
A.	**Draw Air**	**N/A**
A.1	Draw Air – The C1V system draws air to maintain select C1 area internal design conditions. The fire detection & alarm system (FDE) sends a signal to shut down the supply unit upon detection of smoke.	3.9.1.2.2
B.	**Condition Air**	**N/A**
B.1	Heat Air – The C1V system heats air to maintain temperatures in ranges to protect equipment and provide suitable worker conditions.	3.9.1.4.3
B.2	Humidify Air – The C1V system humidifies air using water from the domestic water system (DOW) to maintain humidity in the ranges to protect electronic equipment and provide suitable worker conditions.	3.9.1.4.4
B.3	Cool Air – The C1V system cools air to maintain temperatures in ranges to protect all electronic equipment and provide suitable worker conditions.	3.9.1.4.3
C.	**Distribute Air**	**N/A**
C.1	Distribute to Electrical Area – The C1V system distributes conditioned air to electrical areas within the LAW effluent electrical building.	3.9.1.2.1 3.9.1.4.1
C.2	Distribute to Control and Battery Areas – The C1V system distributes conditioned air to control and battery areas within the LAW effluent electrical building. This distribution is independent of the distribution to the electrical areas.	3.9.1.2.1 3.9.1.4.2
C.3	Distribute to Other C1 Areas – The C1V system distributes conditioned air to other C1 areas of the EMF that are not supplied by the ACV system.	N/A
D.	**Exhaust Air**	**N/A**
D.1	Exhaust Battery Room Air – The C1V system exhausts battery room air to prevent hydrogen accumulation. UPE system power is available upon a loss of normal power.	3.9.1.5.1
E.	**Receive Power**	**N/A**
E.1	Receive Low-Voltage Power – The C1V system utilizes non-safety power from the LVE system for operation of all equipment.	N/A
F.	**Protect Equipment**	**N/A**
F.1	Protect Equipment – The GRE system provides grounding/lightning protection for C1V system electrical equipment.	3.4.4.9

Figure 2-10 provides the functional block diagram for the ACV and DVP systems, indicated the internal and external systems and utilities that provide the primary support or interface for that function. Section 3 provides the design requirements to meet both functional and other requirements. System interfaces are provided for reference only.

Figure 2-10 ACV and DVP Systems Functional Block Diagram

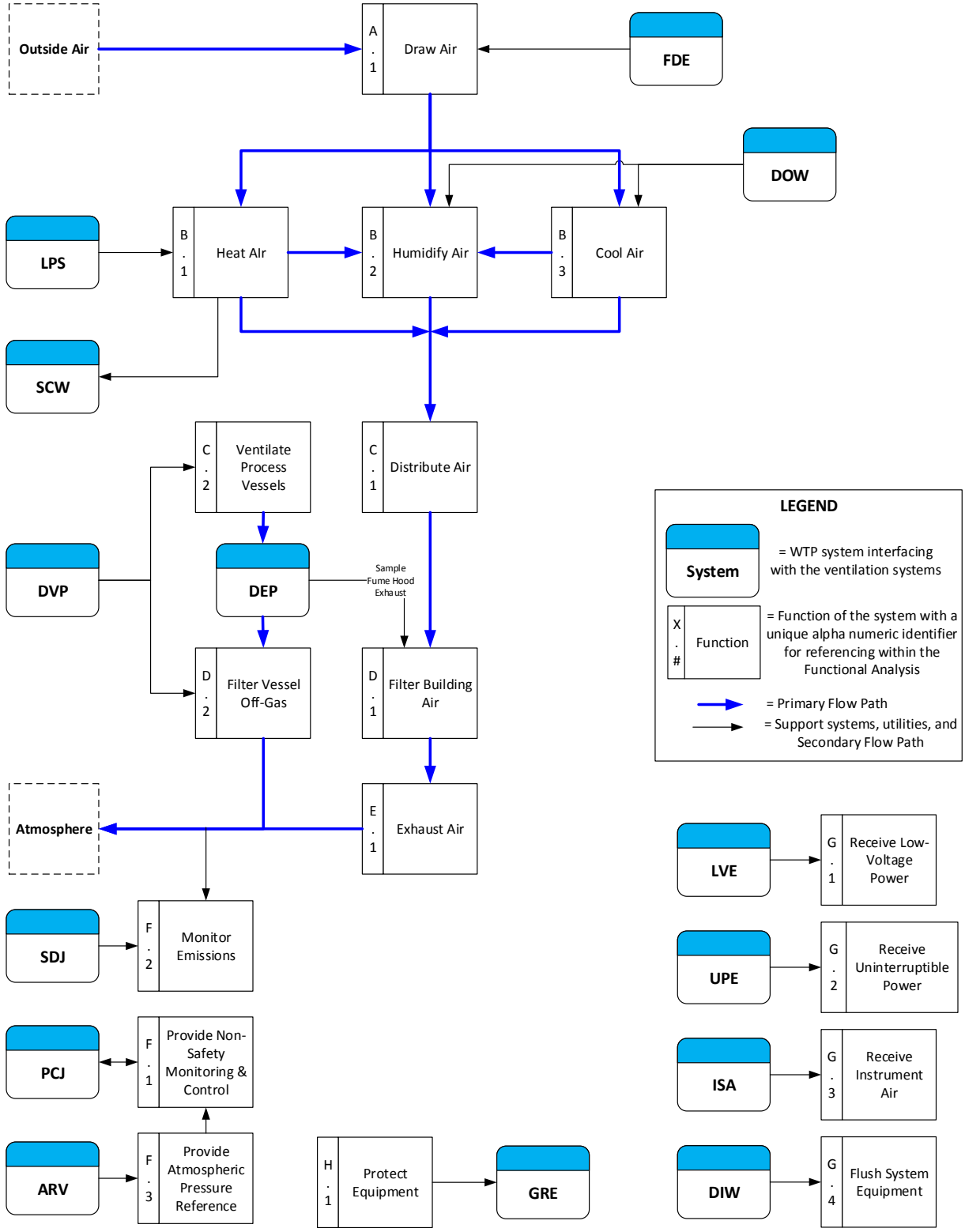

The functions included in Figure 2-10 and further described in Table 2-4 are the preliminary and secondary level functions of the ACV and DVP systems. Where appropriate to support definition of functional and design requirements, functions have been further decomposed and additional levels of supporting functions are also described. The requirement section number provides the location of the applicable functional analysis incorporated into system requirements. Section B.3 provides a further decomposition of system functions, including initiating, terminating, and integrating events and functions.

Table 2-4 Functional Analysis and Crosswalk to Requirements for ACV and DVP System Functions

Reference	Functional Analysis Description	Requirement Section No.
A.	**Draw Air**	**N/A**
A.1	Draw Air – The ACV system draws outdoor air to maintain internal design conditions. The FDE system sends a signal to shut down the supply unit upon detection of smoke.	3.10.1.2.1
B.	**Condition Air**	**N/A**
B.1	Heat Air – The ACV system heats the outdoor air to protect equipment and provide suitable conditions for workers.	3.10.1.4.1
B.2	Humidify Air – The ACV system humidifies air to maintain humidity and provide suitable conditions for workers.	3.10.1.4.2
B.3	Cool Air – The ACV system cools air to protect equipment and provide suitable conditions for workers.	3.10.1.4.1
C.	**Distribute Air**	**N/A**
C.1	Distribute Air – The ACV system distributes conditioned air to designated EMF areas.	3.8.1.1.1 3.10.1.2.1
C.2	Ventilate Process Vessels – The DVP system ventilates the DEP system process vessels to prevent the accumulation of hydrogen gas in the vessel headspace.	3.12.1.2
D.	**Filter Air**	**N/A**
D.1	Filter Building Air – The ACV system filters building and fume hood exhaust air to remove radioactive contaminate in accordance with permit conditions.	3.11.1.3.1
D.2	Filter Vessel Off-Gas – The DVP system filters off-gas removed from the headspace of the DEP system process vessels and evaporation process.	3.12.1.1
E.	**Exhaust Air**	**N/A**
E.1	Exhaust Air – The ACV system exhausts air from building areas in accordance with permit conditions to achieve appropriate dispersion to protect workers. The exhaust is combined with the filtered DVP system exhaust and discharged to the atmosphere.	3.11.1.1.1 3.11.1.5.1 3.11.1.5.2 3.11.1.5.4 3.12.1.1

Reference	Functional Analysis Description	Requirement Section No.
F.	**Provide Monitoring, Control, and Communication Functions**	**N/A**
F.1	Provide Non-Safety Monitoring & Control – The ACV and DVP systems interface with the PCJ system for monitoring of ventilation system conditions.	3.13.1.1 3.13.1.2 3.13.1.4 3.13.2.1 3.13.2.2 3.13.2.3 3.13.2.4 3.13.4.2
F.2	Monitor Emissions – The ACV system interfaces with the SDJ system to monitor emissions in accordance with permit conditions.	3.11.1.6.1
G.	**Receive Utilities**	**N/A**
G.1	Receive Low-Voltage Power – The ventilation systems utilize non-safety power from the LVE system for operation of all HVAC systems and functions.	N/A
G.2	Receive Uninterruptible Power – The ventilation systems utilize battery power for monitoring and limited control of select SSCs in the event of loss of offsite power.	N/A
G.3	Receive Instrument Air – The ventilation systems utilize instrument air for the remote operation of pneumatic valves and dampers.	N/A
G.4	Flush System Equipment – The DVP system receives water from the DIW system to support maintenance activities.	3.8.4.2
H.	**Protect Equipment**	**N/A**
H.1	Protect Equipment – The ACV and DVP systems interface with the GRE system to provide grounding/lightning protection for ACV and DVP system electrical equipment.	3.4.4.9

2.2 System/Facility Classification

The EMF, ACV, C1V, DEP, and DVP systems contain components with the following classifications:

- ☒ Non-safety Radiological
- ☒ Dangerous Waste Permit Affecting
- ☒ Air Permit Affecting
- ☐ Waste Acceptance Impacting
- ☐ Safety Class
- ☐ Safety Significant
- ☒ General

2.3 Basic Operational Overview

When operating in the DFLAW configuration, treated low-activity waste from the TOC is batch transferred to the WTP LAW Facility for vitrification. Compliance with the feed acceptance criteria is the responsibility of the TOC, per ICD-30. Waste feed is transferred from the TOC to the LAW Facility through the underground transfer line that runs between the interface point at the site boundary and the tie-in with the existing transfer line from the PT Facility inside of the LAW Facility. This underground transfer line also includes a tie-in point, located in the LAW effluent drain tank building, to blend concentrated DEP system effluent into the feed. The sequenced transfer system is designed to first convey concentrated DEP system effluent, followed by a transfer of feed from the TOC, with the combined feed pushed into the LCP system with flush water from the TOC.

Liquid effluents collected in the LAW and Lab RLD vessels are transferred to the EMF for concentration within the DEP system evaporator. Waste transfer lines between the LAW Facility, Lab and EMF are flushed to ensure residual effluents are removed from the transfer line. Flush water is collected in the low point drain vessel of the DEP system and is also batch transferred to the evaporator for concentration. Once concentrated, the effluent is normally sampled and recycled to the LCP system for vitrification. During off-normal operating scenarios, the concentrate is sampled, chemically adjusted, and cooled for compliance with the concentrate effluent acceptance criteria (EAC) before returning to Tank Farms' double-shell tanks (DST), per ICD-31. An additional option of offloading to a tanker truck is available (following an ALARA, viability, and safety study).

Overhead vapor from the evaporator is condensed and collected. Spent caustic scrubber solution from the LVP system is transferred to the DEP system and combined with the condensed overhead vapor. The dilute effluent is sampled as required for compliance with dilute EAC, per ICD-06, before being sent to the LERF/ETF. Effluent not in compliance is reprocessed through the DEP system.

Within this document, the ventilation system that serves the process and utility areas of the EMF is referred to as the ACV system. This system operates on a once-through ventilation strategy, whereby air is cascaded from areas of lower contamination potential to areas of higher contamination potential. The exhaust is HEPA-filtered and discharged from the facility through a stack. Other C1 areas that are not supplied by the ACV system have no credible potential for exposure to contamination and receive conditioned air and ventilation from the C1V system, which operates independently of the ACV system.

The following tables identify the boundaries and interfaces associated with the EMF and the DEP, DVP, ACV, and C1V systems in the DFLAW operating configuration. This information is based on issued design where possible, in order to provide a greater level of detail. See Section 1.5.2 for a list of relevant system designators.

Table 2-5 Effluent Management Facility Interfaces

System	Interface	Boundaries
ACV	Conditioned air and ventilation is provided to the process and utility areas of the EMF by the ACV system.	1. ACV system ductwork routed throughout the EMF 2. ACV system equipment (air handling units, unit heaters, HEPA filters, exhaust fans) located both outdoors and indoors. **Reference**: 24590-BOF-P1-25-00003 24590-BOF-P1-25-00004 24590-BOF-P1-26-00003 24590-BOF-P2-P63T-00002 24590-BOF-P2-P63T-00003 24590-BOF-P2-P63T-00004

System	Interface	Boundaries
BSA	Breathing service air piping is provided for maintenance or recovery operations in designated C3 and C5 areas of the EMF.	The BSA piping and manifolds routed throughout the EMF. **Reference:** 24590-BOF-M6-BSA-00003001
C1V	The C1V system provides heating, cooling, and ventilation for the C1 areas of the EMF not supplied by the ACV system.	The C1V system unit heaters located in the fire riser rooms, the fan coil units (FCU) serving the AFR skid room (E-0103A), the C&I room (E-0103B), the drain tank building chase (EDCH01), and the equipment serving the LAW effluent electrical building. **Reference**: 24590-BOF-M8-C1V-00002 TBD for the electrical building
Chemical Additions (AFR, SHR, and SNR)	The EMF houses the chemicals required by the DEP system to process secondary liquid effluents from the LAW Facility and Lab.	The SHR and SNR system tanks, heaters, and pumps located in the chemical storage area (E-0107) and the AFR system skid located in the AFR skid room (E-0103A). **Reference**: 24590-BOF-P1-25-00003 24590-BOF-P1-25-00004
CME/FNJ	The communications electrical system (CME) provides communications, alarms and public address and building evacuation services to ensure worker safety in the EMF. The Facility Network Infrastructure (FNJ) implements a fiber optic backbone providing connectivity within the WTP facilities as well as provides external links to off-site WTP facilities and offices.	The CME/FNJ cabinets located on concrete pads outside the west and south walls of the LAW effluent process building, in the C&I room (E-0103B), in the utility room (EU-0101), and in the LAW effluent electrical building (TBD). **Reference**: 24590-BOF-EF-25-00001 24590-BOF-EF-26-00001 24590-BOF-EF-27-00001
DEP	The EMF houses the DEP system process equipment used to receive, store, concentrate, and transfer secondary liquid effluents.	The DEP system equipment located throughout the LAW effluent process and drain tank buildings. **Reference**: 24590-BOF-P1-25-00003 24590-BOF-P1-25-00004
DIW	Demineralized water is provided to allow for flushing, rinsing, and washdown of equipment and building surfaces to lower dose rates to workers and support contact maintenance in the facility.	The DIW system utility stations located throughout the EMF and the booster pump located outdoors on a concrete pad between the LAW effluent drain tank and process buildings. **Reference**: 24590-BOF-P1-25-00003 24590-BOF-M6-DIW-00002001
DOW	Domestic water is provided for the tepid water supply that supports the EMF safety showers.	The DOW system tepid water skid located in the utility room (EU-0101) and the combination safety shower eye wash units located throughout the process areas of the EMF. **Reference**: 24590-BOF-P1-25-00003 24590-BOF-P1-25-00004 24590-BOF-P1-26-00003
DVP	The EMF houses the DVP system equipment used to purge hydrogen from the DEP system vessels.	The DVP piping, preheaters, HEPA filters, and exhausters located in the LAW effluent process, drain tank, and utility buildings. **Reference**: 24590-BOF-P1-25-00003 24590-BOF-P1-25-00004 24590-BOF-P1-26-00003

System	Interface	Boundaries
EMJ	The environmental monitoring system (EMJ) provides monitoring and surveying capabilities to inform workers in EMF areas of the presence of radiation and/or contamination.	The four continuous air monitors: two located on the west wall of the west evaporator process area (E-0103), one located on the west wall of the east evaporator process area (E-0102), and one located in the drain tank cell (ED-B001). **Reference**: 24590-BOF-ADR-J-18-0001
FPW/ FDE	The EMF interfaces with the FPW and FDE system for detection and suppression of fires within facility buildings.	The FDE system detectors and panels and the FPW system piping located throughout the EMF. **Reference**: 24590-BOF-M6-FPW-00017 TBD for FDE system components
GRE	EMF is grounded and protected from lightning strikes by the installation of the GRE system.	The lightning protection air terminals and grounding grid installed throughout the EMF. **Reference**: 24590-BOF-EG-E41T-00003
HPS	The EMF houses the high pressure system (HPS) secondary steam generator used to support the DEP system process.	The HPS system secondary steam generator located in the east evaporator process area (E-0102). **Reference**: 24590-BOF-P1-25-00004
HTE	The EMF structure supports the HTE system equipment used for heat tracing on process piping.	The HTE system panels, transformers, and switches on concrete pads outside of the LAW effluent process and utility buildings. **Reference**: 24590-BOF-P1-25-00003 24590-BOF-P1-25-00004 24590-BOF-P1-26-00003
Lab	The EMF interfaces with the Lab by receiving liquid effluents that supports the glass-making operations within the LAW Facility. The EMF also provides manual samples of dilute and concentrated effluent to the Lab for sample analysis and verification.	This boundary is defined at the DEP system level.
LAW Facility	The EMF interfaces with the LAW Facility for the exchange of effluents that support the glass-making operations. LAW RLD and LVP system effluents are sent to the EMF for processing, while concentrated effluent is returned to the LAW Facility for blending with the waste feed from the TOC.	This boundary is defined at the DEP system level.
LERF/ETF	The EMF interfaces with LERF/ETF for the disposal of dilute effluent for further processing at LERF/ETF.	This boundary is defined at the DEP system level.

System	Interface	Boundaries
LTE	The lighting electrical system (LTE) provides artificial illumination for the various buildings that comprise the EMF.	The LTE system panels, transformers, and lights located throughout the EMF. **Reference**: 24590-BOF-EL-25-00001 24590-BOF-EL-25-00002 24590-BOF-EL-25-00003 24590-BOF-EL-25-00004 24590-BOF-EL-25-00005 24590-BOF-EL-25-00006 24590-BOF-EL-25A-00001 24590-BOF-EL-26-00001 24590-BOF-EL-26-00002 TBD for the electrical building
MVE/LVE	Medium voltage power is provided to the EMF, where it is stepped down to low voltage power and supplied to end users throughout the various buildings that comprise the EMF.	1. The medium voltage electrical system (MVE) electrical equipment located in the LAW effluent electrical building. 2. The LVE system electrical equipment located in the LAW effluent electrical building and the distribution panels located in the utility room (EU-0101), C&I room (E-0103B), and the east evaporator process area (E-0102). **Reference**: 24590-BOF-P1-25-00004 24590-BOF-P1-26-00003 TBD for the electrical building
PCJ	The PCJ system provides non-safety monitoring and control of EMF SSCs.	The PCJ system enclosures located in the C&I room (E-0103B), utility room (EU-0101), and the LAW effluent electrical building. **Reference**: 24590-BOF-P1-25-00003 24590-BOF-P1-25-00004 24590-BOF-P1-26-00003 TBD for the electrical building
PCW	The EMF houses the plant cooling water system (PCW) equipment that supports the DEP system process.	The PCW system strainer, vessel, heat exchanger, and pumps located in the utility room (EU-0101). **Reference**: 24590-BOF-P1-26-00003
PSA	Plant service air is provided to end users in the EMF at stations with hose connections.	The PSA system vessel and filter located in the utility room (EU-0101) and the plant service air utility stations located throughout the EMF. **Reference**: 24590-BOF-P1-26-00003 24590-BOF-M6-PSA-00007001
PSW	Process service water is provided in various rooms and areas to allow for flushing, rinsing, and washdown of equipment and building surfaces to lower dose rates to workers and support contact maintenance in the facility.	The PSW system utility stations located throughout the EMF. **Reference**: 24590-BOF-M6-PSW-00004001
SDJ	The stack discharge monitoring system (SDJ) interfaces with the EMF stack for monitoring of the building exhaust in accordance with air permit requirements.	The SDJ system panels and equipment located in the filter room (EU-0102). **Reference**: 24590-BOF-P1-26-00003

System	Interface	Boundaries
Tanker Trucks	The EMF provides an option for the disposal of concentrated effluent to tanker trucks for offsite disposal. (This is following an ALARA, viability, and safety study)	This boundary is defined at the DEP system level.
Tank Farms DST	Concentrated effluent or untreated evaporator feed from the EMF is returned to Tank Farms for storage.	This boundary is defined at the DEP system level.
TOC	The EMF interfaces with the Tank Operations Contractor to provide treated low-activity waste feed to the LAW Facility.	This boundary is defined at the DEP system level.
UPE	The UPE battery system provides power for the monitoring and limited control of applicable EMF SSCs in the event of a loss of site power.	The UPE system equipment located in the LAW effluent electrical building and the distribution panels located in the utility room (EU-0101) and the C&I room (E-0103B). **Reference**: 24590-BOF-P1-25-00003 24590-BOF-P1-26-00003 TBD for the electrical building

Table 2-6 DEP System Interfaces

System	Interface	Boundaries
ACV	The ACV system provides direct exhaust of the operating space of the DEP system sampling station.	The 12” duct at the top of DEP-HOOD-00001 that mates with the ACV system exhaust ductwork. **Reference**: 24590-BOF-M0-DEP-00001001 24590-BOF-M8-ACV-00001004
AFR	Antifoam reagent is provided for use in the DEP evaporator separator vessel to minimize entrainment of aerosols within the overhead vapor.	The piping from the AFR skid to DEP-EVAP-00001, at the inlet to plug valve DEP-V-00145. **Reference**: 24590-BOF-M6-DEP-00003001
DIW	Demineralized water is provided to allow for flushing, rinsing, and washdown of DEP equipment to lower dose rates to workers and support contact maintenance in the facility.	1. The flush connection points located throughout the DEP system process piping. 2. The DIW system piping branch to the low point drain vessel spray nozzles and loop seal at the inlet to ball valve DEP-V-00477. 3. The DIW system piping branch to DEP-HOOD-00001 at the inlet to ball valve DEP-V-44462. 4. The DIW system piping branches to the spray nozzles of DEP-VSL-00002 and DEP-VSL-00003A/B/C, at the inlet to ball valves DEP-V-00515, DEP-V-00864, DEP-V-44112, and DEP-V-00885, respectively. 5. The DIW system piping branches to the discharge lines from DEP-FILT-00003 at the inlet to ball valves DEP-V-44292 and DEP-V-44828. 6. The DIW system piping branch to the DEP system piping upstream of DEP-MTEE-00001 at the inlet to ball valve DEP-V-44257. 7. The DIW system piping branch to DEP-VSL-00008 at the inlet to restriction orifice DEP-RO-00016.

System	Interface	Boundaries
		8. The DIW system piping branch to the discharge line from DEP-PMP-00003A/B at the inlet to ball valve DEP-V-44126. **Reference**: 24590-BOF-M6-DEP-00001001 24590-BOF-M6-DEP-00001002 24590-BOF-M6-DEP-00002001 24590-BOF-M6-DEP-00002004 24590-BOF-M6-DEP-00002005 24590-BOF-M6-DEP-00002006 24590-BOF-M6-DEP-00003001 24590-BOF-M6-DEP-00003003 24590-BOF-M6-DEP-00003004 24590-BOF-M6-DEP-00003006 24590-BOF-M6-DEP-00004003 24590-BOF-M6-DEP-00005001 24590-BOF-M6-DEP-00005002 24590-BOF-M6-DEP-00005003 24590-BOF-M6-DEP-00005004 24590-BOF-M6-DEP-00006001 24590-BOF-M6-DEP-00010001
DVP	The DEP system interfaces with the DVP system for ventilation of process vessels to prevent the build-up of hydrogen and non-condensable gases in the headspace of DEP process vessels.	1. The inlet and outlet connections between the DVP system piping and DEP-VSL-00001, DEP-VSL-00002, DEP-VSL-00003A/B/C, DEP-VSL-00004A/B, and DEP-VSL-00005A/B. 2. The outlet from DEP-COND-00003 to the DVP system vessel header. **Reference**: 24590-BOF-M6-DEP-00001001 24590-BOF-M6-DEP-00002001 24590-BOF-M6-DEP-00003004 24590-BOF-M6-DEP-00004001 24590-BOF-M6-DEP-00004002 24590-BOF-M6-DEP-00005001 24590-BOF-M6-DEP-00005002 24590-BOF-M6-DEP-00005003 24590-BOF-M6-DEP-00006001 24590-BOF-M6-DEP-00006002
GRE	DEP system equipment is grounded to the GRE system grid.	The grounding connections between DEP system equipment and the GRE system grid at the EMF. **Reference**: 24590-BOF-EG-25-00001 24590-BOF-EG-25-00002 24590-BOF-EG-25-00003 24590-BOF-EG-25-00004 24590-BOF-EG-25A-00001
HPS	High pressure steam is provided to the DEP system via a secondary loop to provide the heating capacity necessary for evaporator operation.	1. The steam supply piping connection point to DEP-RBLR-00001. 2. The steam supply piping to the DEP system steam ejectors at the inlet to gate valve DEP-V-00349. **Reference**: 24590-BOF-M6-DEP-00003002 24590-BOF-M6-DEP-00003004

System	Interface	Boundaries
HTE	The heat trace electrical system provides freeze protection for DEP pipes, instrument air lines, liquid filled lines, and instrument sensing lines that are exposed to outdoor ambient conditions.	The heat trace cables installed on DEP system process piping located outdoors. **Reference**: 24590-BOF-M6-DEP-00002001 24590-BOF-M6-DEP-00004001 24590-BOF-M6-DEP-00004002 24590-BOF-M6-DEP-00005001 24590-BOF-M6-DEP-00005002 24590-BOF-M6-DEP-00005003 24590-BOF-M6-DEP-00005004 24590-BOF-M6-DEP-00006001 24590-BOF-M6-DEP-00006002 24590-BOF-M6-DEP-00009002 24590-BOF-M6-DEP-00009003 24590-BOF-M6-DEP-00009004 24590-BOF-M6-DEP-00009005 24590-BOF-M6-PWD-00058002
ISA	Dry, clean, pressurized air from the ISA system is used to operate pneumatic valves and instruments.	1. The instrument service air piping connection points to pneumatically actuated DEP system valves. 2. The instrument service air piping connection points to the seals of DEP-PMP-00001A/B, DEP-PMP-00003A/B. DEP-PMP-00007A/B, and DEP-PMP-00017. **Reference**: 24590-BOF-M6-ISA-00001001
LAW-LCP	The DEP system conveys waste feed from the TOC to the LCP system via an underground waste transfer line in the DFLAW configuration. The DEP system also recycles concentrated effluent to the LAW-LCP system via the same underground waste transfer line used to provide the TOC waste feed.	The underground coaxial piping to LCP-VSL-00001/00002 at the battery limit of the LAW Facility. **Reference**: 24590-BOF-M6-RLD-00012001
LAW-LVP	The DEP system receives scrubber effluent from the LVP system. The scrubber effluent is combined with dilute effluent from the DEP process and stored for transfer for LERF/ETF.	The LVP system piping from the LAW Facility to the EMF where the pipe transitions from coaxial to single-walled in the drain tank cell. **Reference**: 24590-BOF-M6-RLD-00012001
Lab-RLD	The DEP system receives secondary liquid effluents from the Lab-RLD system for processing through the DEP evaporator.	The RLD system piping from the Lab to the EMF where the pipe transitions from coaxial to single-walled in the drain tank cell. **Reference**: 24590-BOF-M6-RLD-00012002
LAW-RLD	The DEP system receives secondary liquid effluents from the LAW-RLD system for processing through the DEP evaporator.	The RLD system piping from the LAW Facility to the EMF where the pipe transitions from coaxial to single-walled in the drain tank cell. **Reference**: 24590-BOF-M6-RLD-00012001
LERF/ETF	The DEP system transfers dilute effluent to LERF/ETF for further processing.	The underground coaxial piping at Nodes 8A/B of the WTP site boundary. **Reference**: 24590-BOF-M6-RLD-00012002 24590-WTP-B2-C12T-00001

System	Interface	Boundaries
LVE	Low voltage power is provided for the operation of DEP equipment and components.	The inlet power connections to all DEP system equipment requiring power. **Reference**: 24590-BOF-E8-LVE-00002
NLD	Non-radioactive liquids collected in the chemical storage area are recycled to the DEP system.	The NLD system piping from NLD-SUMP-00032 to DEP-VSL-00004A/B at the inlet to ball valves DEP-V-44348 and DEP-V-44350, respectively. **Reference**: 24590-BOF-M6-NLD-00008001
PCJ	The PCJ system provides non-safety monitoring and control of DEP SSCs.	The inlet connections to DEP system monitoring and control instruments. **Reference**: 24590-BOF-J3-DEP-0000X (multiple)
PCW	Plant cooling water is provided to the DEP system via a secondary loop to condense evaporator overhead vapors and maintain vacuum in the condensers. PCW is also used in the transfer cooler to cool concentrated effluent for return to Tank Farms.	1. The PCW system supply piping to DEP-HX-00001 at the outlet of ball valve PCW-V-69882 and the return line to the PCW system at the inlet to PCW-V-69883. 2. The PCW system supply piping to DEP-COND-00001/2/3 at the inlet to butterfly valve DEP-V-00759 and the return line to the PCW system at the outlet of butterfly valve DEP-V-00411. **Reference**: 24590-BOF-M6-DEP-00002006 24590-BOF-M6-DEP-00003004 24590-BOF-M6-PCW-00005002
PSA	Dry, pressurized air from the PSA system is used for the evaporator feed filter, the low-point drain area sump pump, and the sample fume hood.	1. The PSA system piping branch to DEP-FILT-00003 at the inlet to ball valve DEP-V-00763. 2. The PSA system piping branch to DEP-HOOD-00001 at the inlet to ball valve DEP-V-44647. 3. The PSA system piping branch to DEP-PMP-00031 at the inlet to ball valve DEP-V-44167. **Reference**: 24590-BOF-M6-DEP-00001002 24590-BOF-M6-DEP-00002004
PSW	Process service water is provided to allow for flushing, rinsing, and washdown of DEP equipment to lower dose rates to workers and support contact maintenance in the facility.	1. The flush connection points located at the suction header of DEP-PMP-00004A/B/C and on the coaxial piping from DEP-PMP-00003A/B in the drain tank building chase. 2. The PSW system pipe connection to the pump seal boxes of DEP-PMP-00001A/B, DEP-PMP-00003A/B, DEP-PMP-00007A/B, and DEP-PMP-00017. 3. The PSW system pipe branches to the spray nozzles of DEP-VSL-00004A/B at the inlet of ball valves DEP-V-00533 and DEP-V-00517, respectively. 4. The PSW system pipe branches to the wash rings of DEP-VSL-00005A/B at the inlet of ball valves DEP-V-00649 and DEP-V-00577, respectively. **Reference**: 24590-BOF-M6-DEP-00001002 24590-BOF-M6-DEP-00003001 24590-BOF-M6-DEP-00003003 24590-BOF-M6-DEP-00004001 24590-BOF-M6-DEP-00004002 24590-BOF-M6-DEP-00004003 24590-BOF-M6-DEP-00005004

System	Interface	Boundaries
		24590-BOF-M6-DEP-00006001 24590-BOF-M6-DEP-00006002 24590-BOF-M6-DEP-00010001
SCW	The SCW system receives steam condensate from the reboiler and transfers secondary steam generator blowdown to the DEP system.	1. The DEP system piping from DEP-VSL-00008 to HPS-HX-00011 at the outlet of ball valve DEP-V-00529. 2. The SCW system piping from SCW-PMP-00093 to DEP-VSL-00005A/B at the inlet to ball valves DEP-V-44229 and DEP-V-44233. **Reference**: 24590-BOF-M6-DEP-00003006 24590-BOF-M6-DEP-00006001 24590-BOF-M6-DEP-00006002
SHR	Sodium hydroxide is used to chemically adjust the feed and concentrated effluent to allow for transfer to Tank Farms or the LAW Facility.	1. The SHR system piping from SHR-TK-00013 to DEP-VSL-00002 at the inlet to ball valve DEP-V-40499. 2. The SHR system piping from SHR-TK-00013 to DEP-VSL-00003A/B/C at the inlet to ball valves DEP-V-00287, DEP-V-00234, and DEP-V-00694, respectively. 3. The SHR system piping from SHR-TK-00013 to the DEP system pipe from DEP-PMP-00003A/B to the LAW Facility at the inlet of plug valve DEP-V-44269. **Reference**: 24590-BOF-M6-DEP-00002001 24590-BOF-M6-DEP-00005001 24590-BOF-M6-DEP-00005002 24590-BOF-M6-DEP-00005003 24590-BOF-M6-DEP-00005004
SNR	Sodium nitrite is used for chemical adjustment of the feed and concentrated effluent to allow for transfer to Tank Farms or the LAW Facility.	1. The SNR system piping from SNR-TK-00002 to DEP-MTEE-00001 at the inlet to ball valve DEP-V-44262. **Reference**: 24590-BOF-M6-DEP-00002005
Tanker Trucks	The EMF provides an option for the disposal of concentrated effluent to tanker trucks for offsite disposal. (This is following an ALARA, viability, and safety study)	The load-out point downstream of DEP-PMP-00003A/B in the EMF truck bay. **Reference**: 24590-BOF-M6-DEP-00005004
Tank Farms DST	Tank Farms receives concentrated effluent or untreated evaporator feed from the DEP system.	The underground coaxial piping at Node 14 of the WTP site boundary. **Reference**: 24590-BOF-M6-RLD-00012002 24590-WTP-B2-C12T-00001
TOC	The DEP system conveys TOC treated low-activity waste to the LCP system.	The underground coaxial piping at Node 13 of the WTP site boundary. **Reference**: 24590-BOF-M6-RLD-00012002 24590-WTP-B2-C12T-00001
UPE	The UPE battery system provides power for the monitoring and limited control of applicable DEP SSCs in the event of a loss of site power.	The inlet power connection to DEP-PNL-00001. **Reference**: 24590-BOF-E8-UPE-25001

Table 2-7 DVP System Interfaces

System	Interface	Boundaries
ACV	Filtered off-gas from the DVP system is discharged into the building exhaust stack downstream of the ACV HEPA filters and exhaust fans prior to release to the atmosphere.	The penetration of the DVP system B31.3 piping into the ACV system exhaust ductwork downstream of ACV-FAN-00001A/B. **Reference**: 24590-BOF-M8-SDJ-00001
DEP	The DVP system interfaces with DEP process vessels for the removal of hydrogen gases that accumulate in vessel headspace.	1. The inlet and outlet connections between the DVP system piping and DEP-VSL-00001, DEP-VSL-00002, DEP-VSL-00003A/B/C, DEP-VSL-00004A/B, and DEP-VSL-00005A/B. 2. The outlet from DEP-COND-00003 to the DVP system vessel header. **Reference**: 24590-BOF-M6-DEP-00001001 24590-BOF-M6-DEP-00002001 24590-BOF-M6-DEP-00003004 24590-BOF-M6-DEP-00004001 24590-BOF-M6-DEP-00004002 24590-BOF-M6-DEP-00005001 24590-BOF-M6-DEP-00005002 24590-BOF-M6-DEP-00005003 24590-BOF-M6-DEP-00006001 24590-BOF-M6-DEP-00006002
DIW	Demineralized water is provided to allow for flushing, rinsing, and washdown of DVP equipment to lower dose rates to workers and support contact maintenance in the facility.	The flush connection point in the combined vessel vent header upstream of DVP-HTR-00001A/B. **Reference**: 24590-BOF-M6-DVP-00001001
GRE	DVP system electrical equipment is grounded and protected from lightning strikes by the GRE system.	The grounding connections between DVP system equipment and the GRE system grid in the LAW effluent process building. **Reference**: 24590-BOF-EG-25-00004
ISA	Dry, clean, pressurized air from the ISA system is used to operate the exhauster outlet isolation valves.	The outlet of the ISA system valves (ISA-V-84634/84635) supplying instrument service air for the actuation of DVP-YV-8122/8120. **Reference**: 24590-BOF-M6-DVP-00001001
LVE	Low voltage power is provided for the operation of DVP system equipment and components.	The inlet power connections to all DVP system equipment requiring power. **Reference**: 24590-BOF-E8-LVE-00002
PCJ	The PCJ system provides non-safety monitoring and control of DVP system SSCs.	The inlet connections to DVP system monitoring and control instruments. **Reference**: 24590-BOF-J3-DVP-70001 24590-BOF-J3-DVP-70002 24590-BOF-J3-DVP-70003 24590-BOF-J3-DVP-71001 24590-BOF-J3-DVP-71002 24590-BOF-J3-DVP-71003 24590-BOF-J3-DVP-71004

System	Interface	Boundaries
UPE	The UPE battery system provides power for the monitoring and limited control of applicable DVP system SSCs in the event of a loss of site power.	The inlet power connection to DVP system equipment requiring uninterruptible power. **Reference**: 24590-BOF-E8-UPE-25001

Table 2-8 C1V System Interfaces

System	Interface	Boundaries
DOW	Domestic water is provided for humidification of supply air provided to the LAW effluent electrical building.	The DOW system pipe connection to the C1V system HVAC units servicing the LAW effluent electrical building. **Reference**: 24590-BOF-M6-DOW-00005001
FDE	Smoke detection capabilities are provided in the LAW effluent electrical building ventilation system to support the shutdown of HVAC fans in the event of a fire.	The hardwired interlock between the smoke detector contact and the C1V system equipment servicing the LAW effluent electrical building. **Reference**: TBD
GRE	C1V system electrical equipment is grounded and protected from lightning strikes by the GRE system.	The grounding connections between C1V system equipment and the GRE system grid at the EMF. **Reference**: 24590-BOF-EG-25-00003 24590-BOF-EG-25-00004 24590-BOF-EG-25A-00001 24590-BOF-EG-26-00001 24590-BOF-EG-27-00001
LVE	Low voltage power is provided for the operation of C1V system equipment and components.	The inlet power connections to all C1V system equipment requiring power. **Reference**: 24590-BOF-E8-LVE-00002
UPE	The UPE system provides power for the monitoring and control of C1V-FAN-27001.	The inlet power connection to the hydrogen mitigation control panel (C1V-PNL-27001). **Reference**: 24590-BOF-E1-UPE-00001

Table 2-9 ACV System Interfaces

System	Interface	Boundaries
DEP	The ACV system provides direct exhaust of the operating space of the DEP system sampling fume hood.	The 12” duct at the top of DEP-HOOD-00001 that mates with the ACV system exhaust ductwork. **Reference**: 24590-BOF-M0-DEP-00001001 24590-BOF-M8-ACV-00001004
DOW	Domestic water is provided to the ACV system air handling units (ACV-AHU-00001A/B).	The DOW system piping inlet connections to the packaged ACV-AHU-00001A/B. **Reference**: 24590-BOF-M8-ACV-00001008

System	Interface	Boundaries
DVP	Filtered off-gas from the DVP system is discharged into the building exhaust stack downstream of the ACV HEPA filters and exhaust fans prior to release to the atmosphere.	The penetration of the DVP system B31.3 piping into the ACV system exhaust ductwork downstream of ACV-FAN-00001A/B. **Reference**: 24590-BOF-M8-SDJ-00001
FDE	Smoke detection capabilities are provided in the ACV system to support the shutdown of the AHUs in the event of a fire.	The hardwired interlock between the FDE system smoke detector contact and the associated fan motor adjustable speed drive (ASD) controller starter circuit. **Reference**: 24590-BOF-M8-ACV-00001001
GRE	ACV system electrical equipment is grounded and protected from lightning strikes by the GRE system.	The grounding connections between ACV system equipment and the GRE system grid at the EMF. **Reference:** 24590-BOF-EG-25-00003 24590-BOF-EG-25-00004 24590-BOF-EG-25A-00001 24590-BOF-EG-26-00001 24590-BOF-EG-26-00002
ISA	Dry, clean, pressurized air from the ISA system is used to operate pneumatic dampers.	The outlet of the ISA system isolation valves supplying instrument service air to the ACV system pneumatically operated dampers. **Reference**: 24590-BOF-M8-ACV-00001001 24590-BOF-M8-ACV-00001004 24590-BOF-M8-ACV-00001007
LPS	Low pressure steam is provided to air handling units to warm air such that minimum temperatures are maintained in process and utility areas of the EMF.	The low pressure steam system (LPS) supply piping connection to the preheat and reheat coils of ACV-AHU-00001A/B. **Reference**: 24590-BOF-M8-ACV-00001001
LVE	Low voltage power is provided for the operation of ACV system equipment and components.	The inlet power connections to all ACV system equipment requiring power. **Reference**: 24590-BOF-E8-LVE-00002
PCJ	The PCJ system provides non-safety monitoring and control of ACV system SSCs.	The inlet connections to ACV system monitoring and control instruments. **Reference**: TBD
SCW	The SCW system collects steam condensate from use of low pressure steam in air handlers for heating purposes.	The ACV-AHU-00001A/B preheat and reheat coil condensate piping connection to the SCW system condensate return piping. **Reference**: 24590-BOF-M8-ACV-00001001
SDJ	The ACV system interfaces with the SDJ system for monitoring of the building exhaust (including filtered vessel vent off-gas from the DVP system) in accordance with air permit requirements.	The SDJ system sample probe penetrations in the ACV system exhaust ductwork. **Reference**: 24590-BOF-M8-SDJ-00001

3 Design Requirements

3.1 Requirements

Requirements are documented in Sections 3.4 through 3.15. Each requirement statement is accompanied by a basis discussion (as needed) and the expected means of verification. Requirements shall be met in design. If a requirement stated in this document cannot be met in design, then a revision to the requirement needs to be pursued, if possible, or the design must be changed to meet the requirement.

Requirements preceded by "**[HOLD]**" may only be used in support of preliminary or committed design, which shall also be issued with appropriate holds per procedure 24590-WTP-3DP-G04B-00046, *Engineering Drawings*. Requirements preceded by "**[HOLD]**" may not be used in support of procurement, fabrication, or construction. Per Section 5.7 of 24590-WTP-3DP-G04B-00046, procurement of equipment with requirements on HOLD in the FDD/SDD may proceed in certain cases with the authorization of the Manager of Production Engineering.

The following abbreviations are used to designate the selected method for verification (see 24590-WTP-3DP-G04B-00092, *System Verification,* for additional guidance concerning methods of verification):

(A) Analysis
(R) Review
(I) Inspection
(T) Test

The following abbreviations are used to designate the organization or individual responsible for performing the verification:

(COM) Commissioning
(CON) Construction
(ENG) Engineering (including Independent, Qualified, Registered Professional Engineer (IQRPE) reviews, where noted)
(ES&H) Environmental, Safety, and Health
(OPS) Operations
(SU) Startup

3.2 Bases

Basis discussions are provided as needed to explain the decomposition or interpretation from the originating source requirement(s). Where a **[HOLD]** has been applied to a requirement, this section will include the basis for the **[HOLD]**.

3.3 References

The requirements include a source document reference. Each unique source document reference is bracketed separately. Requirements may include a reference to Section 2.1, *System Functions/Safety Functions*, listed in parentheses following the source document. A complete listing of all source references is provided in Section 5.1.

3.4 Effluent Management Facility-Level Requirements

3.4.1 General Requirements

3.4.1.1 Mission and Functional/Performance Requirements

3.4.1.1.1 Effluent Management Facility Production

Requirement: The EMF shall be capable of supporting the collection, processing, and disposing of mixed radioactive liquid effluents from the LAW Facility and Lab to support the LAW Facility design capacity of 30 metric tons of glass (MTG) per day and a treatment capacity of 21 MTG per day. The availability of the EMF shall support a minimum integrated facility availability equal to or greater than 70 percent. [Sections C.7(b)(1), C.7(b)(2), C.7(d)(4)(ii), WTP Contract] [Sections 6, 6.3, BOD] (Table 2-1, A.1)

Basis Discussion: The LAW Facility is designed to produce 30 MTG per day. While operating in the DFLAW configuration, the EMF must be designed to support all internal systems to meet that production rate.

Verification: Verification is expected to be achieved through the following:

Verif. Method	Verif. By	Plan	Notes/Comments
A	**ENG**	Perform an analysis to verify the overall facility throughput capacity supports a LAW Facility design capacity of 30 MTG per day and a treatment capacity of 21 MTG per day.	
R	**ENG**	Review the design to verify conformance to the results of the analysis.	
T	**SU/ COM**	Perform a test to verify the capability to support the LAW Facility cold commissioning capacity testing criteria.	Expected to be met along with the LAW production requirement in the *LAW Facility Design Description*, 24590-LAW-3ZD-20-00002.

3.4.1.1.2 Effluent Management Facility Operation

Requirement: The EMF shall be designed to operate independently of the PT and HLW Facilities in the DFLAW configuration. [Section 6.1.4, BOD]

Basis Discussion: The ability to operate the EMF independent of the PT and HLW Facilities from the DFLAW configuration supports the project mission of LAW Facility glass production on an accelerated schedule.

Verification: Verification is expected to be achieved through the following:

Verif. Method	Verif. By	Plan	Notes/Comments
R	**ENG**	Review the design to verify the EMF is designed to operate independently of the PT and HLW Facilities in the DFLAW configuration.	

3.4.2 Requirements Related to Off-Normal/Emergency (Design Basis) Conditions and Configurations

General and emergency conditions and site parameters to be used as the basis for design are included in the BOD, Chapter 4. Safety analyses used to develop specific requirements for design are performed in accordance with Section C.4 of the WTP Contract.

3.4.2.1 General

The following statement is general and descriptive in nature and not subject to direct implementation and verification. Specific requirements developed to support achievement of these general statements are established in the subsequent sections.

- The EMF and associated SSCs are designed to perform their functional requirements within the established design basis environmental conditions and in accordance with governing codes and standards established for the WTP Project.

3.4.2.1.1 EMF Structure Categorization

Requirement: The EMF structure shall be designed as Hazard Category 3 (HC-3), Seismic Category IV (SC-IV)/Performance Category-1 (PC-1) facility. [Section H.53(c)(1), WTP Contract] [Section 4.1, SRD] (Table 2-1, D.1)

Basis Discussion: The designation of the EMF as SC-IV is a critical design input in the WTP Contract that supports completing the DFLAW configuration within cost and schedule targets.

Verification: Verification is expected to be achieved through the following:

Verif. Method	Verif. By	Plan	Notes/Comments
R	**ENG**	Review the design to verify the EMF structure is designed as a HC-3, SC-IV/PC-1 facility.	

3.4.2.2 External Events

3.4.2.2.1 Ashfall/Snowfall/Precipitation Events

Requirement: The EMF structure and roof shall be designed to withstand ash, precipitation, and snow loading in accordance with the BOD. [Sections 4.6, 4.10, 10.2.7, BOD] (Table 2-1, D.1)

Basis Discussion: Design of the EMF structures and roofing system is considered a passive design feature. The structure and roof system are designed for both static and live loads in accordance with ASCE 7-98, *Minimum Design Loads for Buildings and Other Structures*. Structure and roof system components provide structural integrity to prevent collapse.

Note: Per 24590-WTSC99-1036-42-17, *Final Report – Geotechnical Investigation*, flooding of the site due to inundation by the Columbia River is not credible and groundwater will not adversely impact the WTP. Additionally, DOE-STD-1020-94 identifies tornados as not applicable. Therefore, there are no requirements for the EMF associated with these events.

Verification: Verification is expected to be achieved through the following:

Verif. Method	Verif. By	Plan	Notes/Comments
A	**ENG**	Perform an analysis of the facility structure and roof system verifying the ability to withstand the BOD design loads for snow, precipitation, and (or) ash loading.	
R	**ENG**	Review the structural and roof design to verify conformance to the analysis.	

3.4.2.2.2 DELETED.

3.4.2.2.3 DELETED.

3.4.2.2.4 Straight Wind

Requirement: The EMF exterior structure, doors, and louver assemblies shall be designed to withstand wind speeds in accordance with the BOD. [Sections 4.9, 10.2.7, 10.3.4.10, BOD] (Table 2-1, D.1)

Basis Discussion: Design of the EMF exterior structure is considered a passive design feature. The structure is designed for both static and live loads in accordance with ASCE 7-98, *Minimum Design Loads for Buildings and Other Structures*. Structural components provide structural integrity to prevent collapse.

Verification: Verification is expected to be achieved through the following:

Verif. Method	Verif. By	Plan	Notes/Comments
R	**ENG**	Review the EMF exterior structural design to verify conformance with the BOD design standards for wind loads.	

3.4.2.2.5 Seismic Event

Requirement: The EMF exterior structure and anchorages shall be designed to withstand a seismic event in accordance with the BOD. [Section 10.2.7, BOD] (Table 2-1, D.1)

Basis Discussion: Design of the EMF structures, anchorages, and roofing system is considered a passive design feature. The structure, anchorages, and roof system are designed for both static and live loads in accordance with ASCE 7-98, *Minimum Design Loads for Buildings and Other Structures*. Structure, anchorage, and roof system components provide structural integrity to prevent collapse.

Verification: Verification is expected to be achieved through the following:

Verif. Method	Verif. By	Plan	Notes/Comments
R	**ENG**	Review the structural design to verify conformance with the BOD design standards for seismic events.	

3.4.2.2.6 Loss of Site Electrical Power Event

The event is not applicable to the design of the EMF (structure). Requirements applicable to WTP electrical systems and systems within the EMF are specified at the system level.

3.4.2.3 Internal Events

3.4.2.3.1 Fire Extinguishers

Requirement: For C3 areas, portable fire extinguishers shall be located near, but outside of, the C5 and (or) R5 areas. [Section 13.3.2, BOD] (Table 2-1, D.2)

Basis Discussion: Locating fire extinguishers outside of C5 and/or R5 areas ensures that equipment is not inadvertently installed in a non-accessible area. [ALARA]

Verification: Verification is expected to be achieved through the following:

Verif. Method	Verif. By	Plan	Notes/Comments
R	**ENG**	Review the location of fire extinguishers in C3 areas to verify they are located near, but outside of, the C5 and (or) R5 areas.	

3.4.2.3.2 DELETED.

3.4.2.3.3 Facility Fire Event – Fire Barriers and Other Materials

Requirement: The EMF shall meet the Highly Protected Risk criteria as defined in DOE Order 420.1B. The facility structural and architectural design shall comply with the fire protection requirements identified in the list below and shall use non-combustible materials to the extent practical in accordance with selected building and fire protection codes and standards. Openings and penetrations shall be designed to maintain the integrity of the fire barrier.

- The EMF shall be designed in accordance with fire separation requirements of the applicable building code. Compartmentalization of buildings by fire barriers to limit the spread of fire and restrict the movement of smoke shall be as required by applicable fire protection standards and specific occupancy chapters, and as required by the fire hazard analysis for EMF.
- Mechanical and electrical penetrations of fire barriers shall be fire stopped by materials listed in accordance with applicable codes and standards or approved engineering evaluation and be of a fire rating not less than the barrier or enclosure. Fire barrier dampers and doors shall be rated as required per applicable building and fire protection codes and standards.
- Interior finish materials shall be Class A in accordance with applicable fire protection standards.
- Interior floor coverings shall be Class I in accordance with applicable fire protection standards.
- Membrane roof assemblies shall be Class I as listed by Factory Mutual. Buildings shall be constructed of noncombustible or fire-resistive material.

[Section 10.3.4.7, BOD] (Table 2-1, D.2)

Basis Discussion: The use of non-combustible materials is a passive design feature that mitigates the risk of fire and reduces fire loading in the event of a fire. 2-hr fire barriers are constructed as part of the implementation of DOE O 420.1B. Additional rated barriers are mandated by IBC, IFC and NFPA. To maintain the rating of the fire barriers, the openings (e.g., doors, dampers, etc.) are designed in accordance with their associated NFPA and IBC codes/standards, nationally recognized testing laboratory listing, and manufacturer's requirements.

Verification: Verification is expected to be achieved through the following:

Verif. Method	Verif. By	Plan	Notes/Comments
R	**ENG**	Review the design to verify conformance with the applicable building and fire protection codes and standards.	Prepare a report to document review. Fire Hazard Analysis Engineering to participate in the review.
R	**ENG**	Review material test reports or independent lab certifications provided by suppliers or subcontractors for structural/architectural components indicating conformance with applicable codes and standards.	

3.4.2.3.4 Beyond Design Basis Conditions

When conditions are encountered that are beyond the design basis for the facility or its associated SSCs, affected SSCs are to be considered incapable of performing their design functions until they have been subjected to performance verification.

By definition, there are no design requirements for beyond design basis conditions.

3.4.3 Nuclear Safety, ALARA, Environmental, and Other Regulatory Requirements

Note: Refer to the definitions of *containment* and *confinement* in Section 1.4.

3.4.3.1 Nuclear Safety Requirements

None.

3.4.3.2 ALARA Requirements

3.4.3.2.1 Space for Radiological Monitoring Equipment at Zone Boundaries

Requirement: The facility design shall provide sufficient space to accommodate radiological monitoring equipment at C5/C3 and C3/C2 control area boundaries. Adequate space shall be provided to allow positioning and accessing of monitors and associated equipment without obstructing passageways, doorways, and work areas. Space shall be provided at each personnel survey station for step-off pads, survey instrument storage, and four laundry bags. [Sections 9.4.13.1, 9.4.13.2, BOD] [Sections 12.6.1.2, 12.7, 12.7.1, ORD] (Table 2-1, D.3) (Table 2-1, G.2)

Basis Discussion: The EMF layout supports the inclusion of components tagged ‘RPJ’ that serve a radiological protection function but are not integrated into a formal WTP system per 24590-WTP-RPT-ENG-02-009, *System and Area Locators List and System Division of Responsibility*.[ALARA]

Verification: Verification is expected to be achieved through the following:

Verif. Method	Verif. By	Plan	Notes/Comments
R	**ENG**	Review the design to verify space provisions and the availability of utility connections (electrical power) for radiological monitoring equipment at zone boundary control points.	Plant Operations and Nuclear Safety Engineering to participate in review.

3.4.3.2.2 Decontamination Capability

Requirement: The EMF design shall include the following provisions for decontamination of designated C3 and C5 areas to reduce contamination levels and personnel exposure:

- Washdown capabilities shall be provided to aid decontamination of the stainless-steel lined areas and surfaces with special protective coatings.
- Floors shall be sealed or painted to facilitate decontamination.
- Special protective coatings/sealants compatible with intended decontamination fluids (to allow wet decontamination of surfaces with water, dilute nitric, and/or dilute caustic solutions without damaging the coated surface) shall be applied in C3 and C3/C5 areas to the selected horizontal and vertical surfaces identified in Section 13.4 of the ORD and to surfaces where required by environmental permits or regulations.
- Interior finishes in areas of potential contamination shall be non-porous for ease of decontamination.

[Sections 10.5, 13.4, 14.9, ORD] [Section 10.3.4.11, BOD] (Table 2-1, D.4) (Table 2-1, G.1)

Basis Discussion: This design requirement is based on ALARA design principles. Decontamination capabilities are appropriate for areas anticipated to have significant contamination (e.g., C3/C5 areas, especially areas requiring worker access). Decontamination of inaccessible areas may be appropriate to lower radioactive contamination levels and to support decommissioning. Stainless steel liners are sufficient to meet the intent of the requirement above regarding floor design to facilitate decontamination. If stainless steel liners do not provide adequate coverage up to the minimum height required for decontamination, special coatings are needed to allow for decontamination above the liner height. [ALARA]

Verification: Verification is expected to be achieved through the following:

Verif. Method	Verif. By	Plan	Notes/Comments
R	**ENG**	Review the design to verify C3 and C5 areas have installed washdown capabilities.	
R	**ENG**	Review the design to verify floors are sealed or painted to facilitate decontamination and that the coating is compatible with the intended decontamination fluids.	
R	**ENG**	Review the design to verify interior finishes in areas of potential contamination are non-porous.	

3.4.3.2.3 Minimize Potential for Contamination Accumulation

Requirement: The design shall minimize “dead spaces” in the plant layout where contamination could build up and be difficult to remove (i.e., spaces that could become contaminated, but that have no flush or wash-down capability). [Section 20.0, ORD] (Table 2-1, D.4)

Basis Discussion: Design features that simplify and facilitate decontamination and decommissioning (D&D), minimize contaminated equipment, and minimize the generation of radioactive waste during deactivation and D&D are identified during the planning and design phase based on anticipated decommissioning methods. Pockets and cavities without a functional purpose should be filled with suitable material to minimize the collection of contamination and to provide a means to detect releases within 24 hours per WAC requirements. [ALARA]

Verification: Verification is expected to be achieved through the following:

Verif. Method	Verif. By	Plan	Notes/Comments
R	**ENG**	Review the design to verify the facility conforms to the requirement to minimize areas in which radiological contamination could accumulate, including verification that any specific ADR requirements have been met.	

3.4.3.2.4 Provide for Rapid Evacuation Under Emergency Conditions

Requirement: No physical control(s) shall be installed at any security, radiological, or other area exit that would prevent rapid evacuation of personnel under emergency conditions. [Section 8.1.3, ORD] [Appendix A, RPP] (Table 2-1, D.4)

Basis Discussion: Immediate threats to life or health due to an emergency outweigh concerns of potential inadvertent spread of contamination from evacuating personnel. [ALARA]

Verification: Verification is expected to be achieved through the following:

Verif. Method	Verif. By	Plan	Notes/Comments
R	**ENG**	Review the design to verify rapid evacuation routes are provided and that the design does not impede evacuation.	

3.4.3.2.5 Access Control to High Radiation Areas

Requirement: One or more of the following physical controls shall be used for each entrance or access point to a high radiation area (area classified R5) where radiation levels exist such that an individual could exceed an equivalent dose to the whole body of 1 rem (0.01 Sv) in any one hour at 30 centimeters from the source or from any surface that the radiation penetrates:

- A control device that prevents entry to the area when high radiation levels exist or that, upon entry, causes the radiation level to be reduced below the level that defines a high radiation area.
- A device that functions automatically to prevent use or operation of the radiation source or field while individuals are in the area.
- A control device that energizes a conspicuous visible or audible alarm signal so that the individual entering the high radiation area and the supervisor of the activity are made aware of the entry.
- Locked entryways. During periods when access to the area is required, positive control over each entry is maintained.
- Continuous direct or electronic surveillance capable of preventing unauthorized entry.
- Control devices that automatically generate audible and visual alarm signals to alert personnel in the area before use or operation of the radiation source, and in sufficient time to permit evacuation of the area or activation of a secondary control device that prevent use or operation of the source.

[Appendix A, RPP] (Table 2-1, D.3) (Table 2-1, D.4) (Table 2-1, G.3)

Basis Discussion: For radiological safety purposes, access to high radiation areas must be strictly controlled. Per Appendix A of 24590-WTP-RPP-ESH-01-001, a high radiation area is defined as any area, accessible to individuals, in which radiation levels could result in an individual receiving an equivalent dose to the whole body

in excess of 0.1 rem (0.001 Sv) in 1 hour at 30 centimeters from the radiation source or from any surface that the radiation penetrates. Per Table 5-1 of the BOD, only R5 areas have the potential to exceed this equivalent dose. [ALARA]

Verification: Verification is expected to be achieved through the following:

Verif. Method	Verif. By	Plan	Notes/Comments
R	**ENG**	Review the design to verify conformance to the specified requirements for access controls, including any additional requirements or restrictions imposed by an associated ADR.	

3.4.3.2.6 Design to Limit Personnel Radiation/Contamination Exposure

Requirement: The design shall identify areas based on radiation and contamination levels and shall separate, shield, and control access to these areas to ensure personnel exposure to internal and external radiation during routine and non-routine operations are ALARA. [Appendix A, RPP] [Sections 5.1.1, 5.1.2, BOD] (Table 2-1, D.4)

Basis Discussion: Measures are taken to maintain radiation exposure in controlled areas ALARA through engineered and administrative controls. The primary methods used to control radiation exposure are engineered controls (e.g., confinement, ventilation, remote handling, and shielding). Administrative controls are employed only as supplemental methods to control radiation exposure. [ALARA]

Verification: Verification is expected to be achieved through the following:

Verif. Method	Verif. By	Plan	Notes/Comments
A	**ENG**	Perform an analysis to verify the acceptable radiation and contamination levels, and the necessary shielding requirements for process and vessel areas.	
R	**ENG**	Review the results of the analysis to verify the proper shielding, separation, and access control is used in the appropriate areas.	

3.4.3.2.7 Shield Doors

Requirement: Where necessary or applicable, the design of shield door assemblies or adjacent walls shall permit simultaneous control of contamination and routing of breathing air hoses. Shield doors shall also be constructed for ease of decontamination and designed with airtight seals or an engineered gap to maintain sufficient air velocities to control contamination. [Section 7.1, ORD] (Table 2-1, D.4)

Basis Discussion: The design of shield doors to accommodate simultaneous control of contamination and routing of breathing hoses ensures that that facility worker exposure remains ALARA. The design of shield doors for ease of decontamination is consistent with ALARA principles, and the use of airtight seals/engineered air gaps ensures cascade airflow in EMF process and utility areas can be maintained from areas of lesser contamination potential to areas of greater contamination potential. [ALARA]

Verification: Verification is expected to be achieved through the following:

Verif. Method	Verif. By	Plan	Notes/Comments
A	**ENG**	Perform an analysis to determine the air gap value(s) necessary to maintain sufficient air velocities to control contamination.	This analysis is completed only if an engineered gap is chosen as the design feature, per the requirement statement.
R	**ENG**	Review the design to verify the shield door assemblies or adjacent walls permit simultaneous control of contamination and the routing of breathing air hoses.	
R	**ENG**	Review the design to verify shield doors are constructed for ease of decontamination.	
R	**ENG**	Review the design to verify an airtight seal or an engineered gap is used for contamination control.	
I	**ENG**	Inspect the installed design to verify conformance to the engineered air gap established in the analysis.	This inspection is completed only if an engineered gap is chosen as the design feature, per the requirement statement.

3.4.3.2.8 Off-Site Dose

Requirement: The EMF design shall support the overall WTP design and operating requirement to ensure that exposure to the maximally exposed off-site individual (non-acute) is ALARA, but not more than 1.5 mRem per year. [Section C.7 (a)(13), WTP Contract] [Section 14.3.1, BOD]

Basis Discussion: The limits are for WTP as a whole, taken in conjunction with the other facilities. [ALARA]

Verification: Verification is expected to be achieved through the following:

Verif. Method	Verif. By	Plan	Notes/Comments
A	**ENG**	Perform an analysis to determine the estimated dose rate of the EMF while operating the WTP in the DFLAW configuration.	
R	**ENG**	Review dose estimates from EMF and WTP, based on the process model and facility design, to verify the design is ALARA but not more than 1.5 mRem per year to off-site dose receptor.	

3.4.3.3 Environmental Protection Requirements

3.4.3.3.1 Environmental Temperature Design Parameters

Requirement: The EMF structure shall be designed to operate in the external environmental temperature conditions established in Section 4.12 of the BOD and shall consider the internal conditions to be maintained by the EMF HVAC systems as part of the facility design. [Section 4.12, BOD] [Section 15.1, ORD] (Table 2-1, B.1) (Table 2-1, D.1) (Table 2-1, D.2)

Basis Discussion: The EMF design should integrate with the ventilation system design. The requirements imposed on EMF HVAC systems for establishing internal design conditions are stated in Table 12-1 of the BOD and are included in Sections 3.9.1.4.3, 3.9.1.4.4, 3.10.1.4.1, and 3.10.1.4.2 of this document. The facility structure needs to operate within these temperature ranges.

Verification: Verification is expected to be achieved through the following:

Verif. Method	Verif. By	Plan	Notes/Comments
R	**ENG**	Verify facility construction materials used are designed to withstand the internal and external environments of the EMF.	Review construction details and architectural materials for compliance.

3.4.3.3.2 Dangerous Waste Permit Tank System Design Requirements

Requirement: The design of DWP tank systems shall comply with the following DWP requirements from the BOD:

- The tank foundations shall maintain the load imparted by the filled tank (WAC 173-303-640[3][a][v][A]).
- The tank system shall withstand the effects of frost heave, if applicable (WAC 173-303-640[3][a][v][C]).
- The tank system components shall be designed to support testing for tightness prior to being covered, enclosed, or placed in use (WAC 173-303-640[3][e]).
- Ancillary equipment shall be designed in such a way that it is supported and protected against physical damage and excessive stress due to settlement, vibration, expansion, or contraction. **Note:** Procedures described in American Petroleum Institute (API) Recommended Practice 1615, *Installation of Underground Petroleum Storage Systems*, or ASME B31.3-1996, *Process Piping*, may be used as guidance where applicable (WAC 173-303-640[3][f]).
- Backfill material for tank systems or components placed underground shall be noncorrosive, porous, and homogeneous. Backfill material shall be placed completely around the tank system components and compacted so that the components are uniformly supported (WAC 173-303-640[3][d]).
- The tank system shall prevent the escape of vapors, fumes, or other emissions into the air if the tank holds materials acutely or chronically toxic by inhalation (WAC 173-303-640[5][e]).
- Underground tank system components likely to be affected by vehicular traffic shall be designed for protection against potential damage (WAC 173-303-640[3][a][iv]).
- The tank system shall be designed with the type and degree of corrosion protection recommended by an independent corrosion expert. **Note:** The practices described in the National Association of Corrosion Engineers Standard RP-02-85, *Control of External Corrosion on Metallic Buried, Partially Buried, or Submerged Liquid Storage Systems*, and the API Recommended Practice 1632, *Cathodic Protection of Underground Petroleum Storage Tanks and Piping Systems*, may be used as guidelines for underground tank systems (WAC 173-303-640[3][a][iii]).

[Section 14.10.1, BOD] [Condition III.10.E.3, DWP] (Table 2-1, C.1)

Basis Discussion: A tank system, as defined in WAC 173-303-040, means a dangerous waste storage or treatment tank and its associated ancillary equipment and secondary containment system. Requirements for tank system design and integrity assessments are identified in WAC 173-303-640.

NOTE: Installation of EMF DWP SSCs is dependent upon incorporation of the revised design into the DWP. Additional design requirements of DWP tank systems are provided in Section 3.6.1. [ALARA]

Verification: Verification is expected to be achieved through the following:

Verif. Method	Verif. By	Plan	Notes/Comments
R	**ENG**	An independent, qualified, registered professional engineer (IQRPE) shall review the design to verify the tank system design per established codes and standards in the BOD to prevent damage.	The IQRPE prepares a written assessment attesting that the tank system has sufficient structural integrity and is acceptable for the storing and treating of dangerous waste. The assessment demonstrates that the foundation, structural support, seams, connections, and pressure controls (if applicable) are adequately designed and that the tank system has sufficient structural strength, compatibility with the waste(s) to be stored or treated, and corrosion protection to ensure that it will not collapse, rupture, or fail.

3.4.3.3.3 Dangerous Waste Permit Spill Prevention Controls Design

Requirement: The following requirements shall be implemented for tank systems as part of the spill prevention control design:

- Spill prevention controls shall be provided (e.g., check valves, dry-disconnect couplings) (WAC 173-303-640[5][b][i]).
- Overfill prevention controls shall be provided (e.g., level sensing devices, high-level alarms, automatic feed cutoff, pressure-sensing devices, or bypass to a standby tank) (WAC 173-303-640[5][b][ii]).
- The tank systems shall be marked with signs or labels visible at a distance for 50 ft where routine personnel access is required (WAC 173-303-640[5][d]).
- Signs or labels with a legend identifying the material within the tank system shall be provided to warn employees, emergency response personnel, and the public of major risks associated with the material (WAC 173-303-640[5][d]).

[Section 14.10.1.1, BOD] (Table 2-1, C.1) (Table 2-1, D.4)

Basis Discussion: Spill prevention controls are necessary to ensure that tanks/vessels containing dangerous liquid waste are clearly marked and the contents of the tank are identified for the safety of facility workers. Provisions for spill prevention are included in the design to prevent the release of dangerous liquid waste during waste transfers.

NOTE: Installation of EMF DWP SSCs is dependent upon incorporation of the revised design into the DWP. [ALARA]

Verification: Verification is expected to be achieved through the following:

Verif. Method	Verif. By	Plan	Notes/Comments
R	**ENG**	An IQRPE shall review the design to verify the tank system spill prevention control is designed per the established codes and standards in the BOD.	The IQRPE prepares a written assessment attesting that the tank system has sufficient structural integrity and is acceptable for the storing and treating of dangerous waste. The assessment demonstrates that the foundation, structural support, seams, connections, and pressure controls (if applicable) are adequately designed and that the tank system has sufficient structural strength, compatibility with the waste(s) to be stored or treated, and corrosion protection to ensure that it will not collapse, rupture, or fail.

3.4.3.3.4 Tank System Secondary Containment

Requirement: Tank systems shall be designed with liners, vaults, double-walled tanks, or an equivalent device as approved by Ecology for secondary containment. Portions of the tank systems (including sumps), that serve as part of the secondary containment system shall be exempted from the requirements for secondary containment (WAC 173-303-640[1][c], [4][d][i-iv]). [Section 14.10.1.2, BOD] [Sections 13.4, 14.9, 20.0, ORD] [Section III.10.C.16.a, DWP] (Table 2-1, C.1) (Table 2-1, D.4)

Basis Discussion: Secondary containment systems for EMF process areas ensure that any releases of dangerous liquid waste from primary containment SSCs are captured and are not released to the environment. Secondary containment system design is in accordance with DWP requirements.

NOTE: Installation of EMF DWP SSCs, including secondary containment structural concrete, is dependent upon incorporation of the revised design into the DWP. [ALARA]

Verification: Verification is expected to be achieved through the following:

Verif. Method	Verif. By	Plan	Notes/Comments
R	**ENG**	An IQRPE shall review the design to verify all tank systems are provided with a suitable provision for secondary containment.	The IQRPE prepares a written assessment attesting that the tank system has sufficient structural integrity and is acceptable for the storing and treating of dangerous waste. The assessment demonstrates that the foundation, structural support, seams, connections, and pressure controls (if applicable) are adequately designed and that the tank system has sufficient structural strength, compatibility with the waste(s) to be stored or treated, and corrosion protection to ensure that it will not collapse, rupture, or fail.

3.4.3.3.5 External Liner Design

Requirement: External liners used as secondary containment shall comply with the following:

- Contain 100% of the capacity of the largest tank (WAC 173-303-640[4][e][i][A]). One-hundred percent capacity means the total volume of the tank. It is not the expected process volume of the tank or the volume at the level where overflow prevention measures are implemented.
- As applicable, the liner shall be designed to handle volume of fire protection water from the fire protection water system (FPW) over the minimum design area for a period of 20 minutes in addition to the 100% capacity of the largest tank (UBC, Section 307.2.4).
- Prevent run-on or infiltration into the containment system unless the containment system has the capacity to contain precipitation from a 25-year, 24-hour rainfall event (WAC 173-303-640[4][e][i][B]).
- Be free of cracks or gaps (WAC 173-303-640[4][e][i][C]).
- Surround the tank completely and cover all surrounding earth likely to come into contact with the waste if it were released from the tank (i.e., be capable of preventing lateral and vertical migration of the waste) (WAC 173-303-640[4][e][i][D]).
- Collect releases and accumulated liquids until the collected material is removed (WAC 173-303-640[4][b][ii]).
- Be constructed of material that is compatible with the waste to be placed in the tank system (WAC 173-303-640[4][c][i]).
- Provide sufficient strength and thickness to prevent failure owing to (WAC 173-303-640[4][c][i]):
  - Pressure gradients, including static head and external hydrological forces
  - Physical contact with the waste
  - Climatic conditions
  - The stress of daily operation, including stresses from nearby vehicle traffic
- Be placed on a foundation or base capable of (WAC 173-303-640[4][c][ii]):
  - Supporting the secondary containment system
  - Resisting the pressure gradients above and below the system
  - Preventing failure due to settlement, compression, or uplift
- Provide a leak-detection system that detects the failure of primary tank system or the secondary containment system, the presence of any release of mixed or dangerous waste, or accumulated liquid in the secondary containment system within 24 hours of a leak (WAC 173-303-640[4][c][iii]). **Note:** Ecology has interpreted this requirement to mean the detection of a leak of at least 0.1 gal/hr within 24 hours is defined as being able to detect a leak within 24 hours (DWP, Condition III.10.E.9.e.ii).
- Be sloped or operated to drain and remove liquids resulting from leaks, spills, or precipitation within 24 hours of a leak detection (WAC 173-303-640[4][c][iv]). (Provide a minimum of 1% floor slope, as specified in the secondary containment design document located in Appendix 7.5 of the DWP.)
- Allow for removal of spills, leaks, or accumulated liquid from the secondary containment system within 24 hours or in as timely a manner as possible. (WAC 173-303-640[4][c][iv]).
- Provide means to inspect the visible portion of the secondary containment system on a daily basis (WAC 173-303-640[6][b][iii]). **Note:** Typical civil structural details can be found in Appendix 7.5 of the DWP.
- Where stainless steel liners are used, they shall be extended up the walls to the regulatory required height. The walls above the steel may be sealed with suitable finishes depending on the conditions and as established by the ADR for the special protective coatings.

[Sections 14.10.1.2, 14.10.1.2.1, BOD] [Section 20, ORD] (Table 2-1, C.1) (Table 2-1, D.4)

Basis Discussion: Liners ensure that any releases of dangerous liquid waste from primary containment SSCs are captured and are not released to the environment. Liners are designed in accordance with DWP requirements. **NOTE:** Installation of EMF DWP SSCs is dependent upon incorporation of the revised design into the DWP. [ALARA]

Verification: Verification is expected to be achieved through the following:

Verif. Method	Verif. By	Plan	Notes/Comments
A	**ENG**	Perform an analysis to determine the required liner height for the EMF.	
R	**ENG**	Review the design to verify the acceptable DWP liner height for the EMF.	
R	**ENG**	An IQRPE shall review the design to verify all requirements for the external liners within the EMF have been met.	The IQRPE prepares a written assessment attesting that the external liner has sufficient structural integrity and is acceptable for the storing and treating of dangerous waste. The assessment demonstrates that the foundation, structural support, seams, connections, and pressure controls (if applicable) are adequately designed and that the external liner has sufficient structural strength, compatibility with the waste(s) to be stored or treated, and corrosion protection to ensure that it will not collapse, rupture, or fail.

3.4.3.3.6 Vault Design

Requirement: Vaults used as secondary containment shall comply with the following:

- Contain 100% of the capacity of the largest tank (WAC 173-303-640[4][e][ii][A]). One hundred percent capacity means the total volume of the tank. It is not the expected process volume of the tank or the volume at the level where overflow prevention measures are implemented.
- Prevent run-on or infiltration into the containment system, unless the containment system has the capacity to contain precipitation from a 25-year, 24-hour rainfall event (WAC 173-303-640[4][e][ii][B]).
- Constructed with chemical-resistant water stops in place at all joints (if any) (WAC 173-303-640[4][e][ii][C]).
- Provide with an impermeable interior coating or lining compatible with the stored waste to prevent migration of waste into the concrete (WAC 173-303-640[4][e][ii][D]).
- Provide a means to protection against the formation of ignition of vapors within the vault if the waste is being stored or treated (WAC 173-303-640[4][e][ii][E]):
    - Meets the definition of ignitable waste under WAC 173-303-090(5)
    - Meets the definition of reactive waste under WAC 173-303-090(7) and may form an ignitable or explosive vapor
- Provided with an exterior moisture barrier or be otherwise designed or operated to prevent migration of moisture into the vault if the vault is subject to hydraulic pressure (WAC 173-303-640[4][e][ii][F]).

[Section 14.10.1.2.2, BOD] (Table 2-1, C.1) (Table 2-1, D.4)

Basis Discussion: Vaults are synonymous with process cells or tank and vessel cells. Vault design requirements are applicable for all rooms that do not contain stainless steel liners for secondary containment.

NOTE: Installation of EMF DWP SSCs, including secondary containment structural concrete, is dependent upon incorporation of the revised design into the DWP. [ALARA]

Verification: Verification is expected to be achieved through the following:

Verif. Method	Verif. By	Plan	Notes/Comments
R	**ENG**	An IQRPE shall review the design to verify all requirements for vaults within the EMF have been met.	The IQRPE prepares a written assessment attesting that the vault has sufficient structural integrity and is acceptable for the storing and treating of dangerous waste. The assessment demonstrates that the foundation, structural support, seams, connections, and pressure controls (if applicable) are adequately designed and that the vault has sufficient structural strength, compatibility with the waste(s) to be stored or treated, and corrosion protection to ensure that it will not collapse, rupture, or fail.

3.4.3.3.7 Ancillary Equipment Secondary Containment

Requirement: Tank system ancillary equipment that manages dangerous waste shall have secondary containment (e.g., trench jacketing, double-walled piping). [Section 14.10.1.3, BOD] (Table 2-1, C.1) (Table 2-1, D.4)

Basis Discussion: Ancillary equipment means any device (e.g., piping, fittings, flanges, valves, and pumps) used to distribute, meter, or control the flow of dangerous waste from its point of generation to a tank system, between dangerous waste storage tanks, or to a point of disposal or shipment offsite. For the purposes of the WTP project, in addition to the definition identified above, ancillary equipment may also include other in-line components containing dangerous waste such as breakpots, pulse pots, dampers, drains, overflows, jumpers, joggles, ejectors, strainers, reducers, misters, mixing tees, and certain heat exchangers associated with the piping. If unable to comply with the applicable design requirements, evaluate alternatives in accordance with WAC 173-303-640[4][f].

NOTE: Installation of EMF DWP SSCs is dependent upon incorporation of the revised design into the DWP. [ALARA]

Verification: Verification is expected to be achieved through the following:

Verif. Method	Verif. By	Plan	Notes/Comments
R	**ENG**	An IQRPE shall review the design to verify all requirements for ancillary equipment within the EMF have been met.	The IQRPE prepares a written assessment attesting that the ancillary equipment has sufficient structural integrity and is acceptable for the storing and treating of dangerous waste. The assessment demonstrates that the foundation, structural support, seams, connections, and pressure controls (if applicable) are adequately designed and that the ancillary equipment has sufficient structural strength, compatibility with the waste(s) to be stored or treated, and corrosion protection to ensure that it will not collapse, rupture, or fail.

3.4.3.3.8 Secondary Containment Design for Ancillary Equipment

Requirement: The secondary containment for ancillary equipment shall be designed for the following:

- Prevent any migration of wastes or accumulated liquid out of the system to the soil, groundwater, or surface water at any time during the use of the tank system (WAC 173-303-640[4][b][i]).
- Detect and collect releases and accumulated liquids until the collected material is removed (WAC 173-303-640[4][b][ii]).
- Be constructed or lined with materials compatible with the waste to be placed in the tank system (WAC 173-303-640[4][c][i]).
- Provide sufficient strength and thickness to prevent failure caused by the following (WAC 173-303-640[4][c][i]):
    - Pressure gradients, including static head and external hydrological forces
    - Physical contact with the waste
    - Climatic conditions
    - Stress of daily operation, including stresses from nearby vehicle traffic
- Be placed on a foundation or base capable of the following (WAC 173-303-640[4][c][ii]):
    - Support the secondary containment system
    - Resist the pressure gradients above and below the system
    - Prevent failure due to settlement, compression, or uplift
- Provide a leak detection system that detects, within 24 hours, the failure of the primary tank system or the secondary containment system, the presence of any release of mixed or dangerous waste, or accumulated liquid in the secondary containment system (WAC 173-303-640[4][c][iii]). **Note:** Ecology has interpreted this requirement to mean the detection of 0.1 gal/hr based on the DWP, Condition III.10.E.9.e.ii.
- Slope or be operated to drain and remove within 24 hours liquids resulting from leaks, spills, or precipitation (WAC 173-303-640[4][c][iv]).
- Remove within 24 hours, or in as timely a manner as possible, spills, leaks, or accumulated liquid from the secondary containment system. (WAC 173-303-640[4][c][iv])
- Provide a means to inspect the visible portion of the secondary containment system on daily basis (WAC 173-303-640[6][b][iii]).

[Section 14.10.1.3, BOD] (Table 2-1, C.1) (Table 2-1, D.4)

Basis Discussion: WTP secondary containment systems, including sumps, are exempt from WAC 173-303-640 subsection (4), including the WAC 173-303-640[4][c][iii] requirement to have secondary containment per WAC-173-303-640(1)(c) and EPA/530-SW-88-004 (EPA Office of Solid Waste and Emergency Response in the OSWER guidance document Rules for Hazardous Waste Tank Systems). Per EPA/530-SW-88-004, "Tank systems and sumps that are an integral part of a secondary containment system to collect or contain hazardous waste releases are exempt from the secondary containment requirements of the regulations." All WTP facilities have been constructed without the ability to detect leaks from secondary containment sumps per the exemptions provided in the WAC and EPA source documents.

NOTE: Installation of EMF DWP SSCs is dependent upon incorporation of the revised design into the DWP. [ALARA]

Verification: Verification is expected to be achieved through the following:

Verif. Method	Verif. By	Plan	Notes/Comments
R	**ENG**	An IQRPE shall review the design to verify all requirements for ancillary equipment secondary containment within the EMF have been met.	The IQRPE prepares a written assessment attesting that the ancillary equipment secondary containment has sufficient structural integrity and is acceptable for the storing and treating of dangerous waste. The assessment demonstrates that the foundation, structural support, seams, connections, and pressure controls (if applicable) are adequately designed and that the ancillary equipment secondary containment has sufficient structural strength, compatibility with the waste(s) to be stored or treated, and corrosion protection to ensure that it will not collapse, rupture, or fail.
T	**SU/COM**	Perform a test to verify the leak detection capability of secondary containment equipment for tank systems.	

3.4.3.3.9 Tank Inspection

Requirement: The tank system design shall provide means to perform the following:

- Inspect aboveground portions of the tank systems for corrosion or releases of waste (WAC 173-303-640[6][b][i]).
- Provide the capability to review data gathered from leak detection equipment (e.g., leak detection, level detection, pressure or temperature gauges, monitoring wells) to ensure that the tank system is being operated according to its design (WAC 173-303-640[6][b][ii]).
- Inspect the construction materials and the area immediately surrounding the externally accessible portion of the tank system (e.g. dikes), including the secondary containment to detect erosion or signs of releases of waste (e.g. wet spots, dead vegetation) (WAC 173-303-640[6][b][iii]).
- Inspect the tank systems for areas without secondary containment (WAC 173-303-640[4][f]).

- Inspect the cathodic protection system, if present (WAC 173-303-640[6][c])

[Section 14.10.1.5, BOD] (Table 2-1, C.1) (Table 2-1, D.4)

Basis Discussion: Tank systems are designed to be inspected on a regular basis to identify leaks and faulty equipment. Each of the tank inspection requirements above is to be completed once per operating day per the DWP.

NOTE: Installation of EMF DWP SSCs is dependent upon incorporation of the revised design into the DWP.

Verification: Verification is expected to be achieved through the following:

Verif. Method	Verif. By	Plan	Notes/Comments
R	**ENG**	An IQRPE shall review the design to verify the means for inspecting tank systems, including leak detection equipment, is in accordance with the requirement.	The IQRPE prepares a written assessment attesting that the tank system has sufficient structural integrity and is acceptable for the storing and treating of dangerous waste. The assessment demonstrates that the foundation, structural support, seams, connections, and pressure controls (if applicable) are adequately designed and that the tank system has sufficient structural strength, compatibility with the waste(s) to be stored or treated, and corrosion protection to ensure that it will not collapse, rupture, or fail.

3.4.3.3.10 Miscellaneous Unit Design

Requirement: Miscellaneous units, as defined in the BOD, Section 14, shall be designed to the same requirements as tank systems and ancillary equipment. [Section 14.13, BOD] (Table 2-1, C.1) (Table 2-1, D.4)

Basis Discussion: Miscellaneous units (e.g., condensers, heat exchangers, HEPA filters, etc.) are designed to the same requirements as tank systems and ancillary equipment due to the non-distinctive nature of their definition in the Washington Administrative Code. Design requirements in WAC 173-303-630 through 173-303-670, WAC 173-303-800 through 173-303-806, and 40 CFR 146 are appropriate for the miscellaneous units being permitted.

NOTE: Installation of EMF DWP SSCs is dependent upon incorporation of the revised design into the DWP.

Verification: Verification is expected to be achieved through the following:

Verif. Method	Verif. By	Plan	Notes/Comments
R	**ENG**	An IQRPE shall review the design to verify all requirements for miscellaneous units within the EMF have been met.	The IQRPE prepares a written assessment attesting that the miscellaneous unit has sufficient structural integrity and is acceptable for the storing and treating of dangerous waste. The assessment demonstrates that the foundation, structural support, seams, connections, and pressure controls (if applicable) are adequately designed and that the miscellaneous unit has sufficient structural strength, compatibility with the waste(s) to be stored or treated, and corrosion protection to ensure that it will not collapse, rupture, or fail.

3.4.3.3.11 Loading and Unloading Areas Managing Liquid Dangerous Waste

Requirement: Treatment, storage, and disposal facilities that receive or ship manifested shipments of liquid dangerous waste for treatment, storage, or disposal shall provide and use an area for loading and unloading waste shipments. The loading and unloading areas(s) shall be designed to do the following (WAC 173-303-395[4]):

- Contain spills and leaks that might occur during loading and unloading (WAC 173-303-395[4][a])
- Prevent the release of dangerous waste or dangerous waste constituents to ground or surface waters (WAC 173-303-395[4][b])
- Contain wash waters (if any) resulting from the cleaning of contaminated transport vehicles and load/unload equipment (WAC 173-303-395[4][I])
- Allow for removal, as soon as possible, of collected wastes resulting from spills, leaks and equipment cleaning (if any) in a manner that assures compliance with the previous bullets in this list (WAC 173-303-395[4][d])

[Section 14.14, BOD] [Section 13.1, ORD] (Table 2-1, C.1) (Table 2-1, D.4)

Basis Discussion: Examples of liquid dangerous wastes which may be manifested and shipped for off-site treatment and disposal are waste solvents, paints, adhesives, caustics, and acids. Since the EMF utilizes chemical reagents for corrosion mitigation and pH adjustment in the process, the unloading area must be designed to WAC 173-303-395[4].

Verification: Verification is expected to be achieved through the following:

Verif. Method	Verif. By	Plan	Notes/Comments
R	**ENG**	An IQRPE shall review the design to verify all requirements for loading and unloading areas within the EMF have been met.	The IQRPE prepares a written assessment attesting that the waste shipment loading and unloading areas are designed to contain spills/leaks, prevent release of dangerous waste, contain washes, and provide capability for the removal of collected wastes. The assessment demonstrates that the waste shipment loading and unloading areas are sufficient to provide containment for collected wastes/washes and allow for removal of collected wastes in accordance with WAC requirements.

3.4.3.3.12 DELETED.

3.4.3.3.13 DELETED.

3.4.3.3.14 Building Confinement

Requirement: The building envelope enclosing potentially radioactive areas of the process facilities shall be designed, in conjunction with the HVAC systems, to provide confinement for normal operations and anticipated operational occurrences. [Section 10.3.4.10, BOD] (Table 2-1, B.1) (Table 2-1, D.4)

Basis Discussion: None. [ALARA]

Verification: Verification is expected to be achieved through the following:

Verif. Method	Verif. By	Plan	Notes/Comments
R	**ENG**	Review the building design to verify the facility provides confinement, with the HVAC systems, for normal operations and anticipated operational occurrences.	

3.4.3.3.15 Atmospheric Monitoring for Hazardous Gases

Requirement: Atmospheric monitoring for gaseous hazards shall be provided for rooms or areas where there is a potential for the gas concentration to exceed the Permissible Exposure Limit due to a single failure or mis-operation. [Sections 8.1.1, 8.1.4.3, ORD] (Table 2-1, D.4) (Table 2-1, G.2)

Basis Discussion: Potential gaseous hazards may exist within the EMF. The lower value of the Permissible Exposure Limit, Threshold Limit Value, or Occupational Exposure Limit may be required for code compliance.

Verification: Verification is expected to be achieved through the following:

Verif. Method	Verif. By	Plan	Notes/Comments
A	**ENG**	Perform an analysis to identify the rooms or areas with the potential for gas concentrations to exceed the Permissible Exposure Limit.	
R	**ENG**	Review the design to verify the inclusion of appropriate monitoring equipment in areas identified in the analysis.	

3.4.3.3.16 Facility Design for Control of Hazardous Gases

Requirement: The following hierarchy of requirements shall be applied to the design of the EMF as applicable:

- The facility design shall maintain the room breathing zone below the Immediately Dangerous to Life and Health (IDLH) concentration during expected component failures and abnormal maintenance and operation activities, such as instrument tubing break or mis-operation of vent valves.
- If the facility design cannot prevent reaching IDLH concentrations, the time from the event to reaching IDLH concentration in the room shall be greater than 30 minutes.
- Where the system design cannot provide 30 minutes for identification and evacuation, the affected room shall be considered inaccessible to personnel while the hazard is present in the system piping.
    - Maintenance requirements and plant availability shall be evaluated to ensure contract requirements are met by the design with this limitation on access.
    - Rooms containing these systems shall include design access controls (e.g., locks).

[Section 8.1.4.4, ORD]

Basis Discussion: Potential gaseous hazards may exist within the EMF. If hazardous gases are generated by or contained within the process systems located in the EMF, the facility design is such that features are provided to mitigate the impacts of any release and provide for the safety of the workers.

Verification: Verification is expected to be achieved through the following:

Verif. Method	Verif. By	Plan	Notes/Comments
A	**ENG**	Perform an analysis to compare the duration for breeching dangerous threshold limits against personnel evacuation times.	
R	**ENG**	Review the design to verify the inclusion of design access control (e.g., locks) for the rooms identified in the analysis that cannot provide 30 minutes for identification and evacuation.	

3.4.4 Interface Requirements

3.4.4.1 Interface with the LAW Facility and Lab

Requirement: The EMF shall be designed to accept, store, and treat effluent from the LAW Facility and Lab. [Sections 6, 6.1.4, BOD] (Table 2-1, A.1)

Basis Discussion: The LAW RLD, LAW LVP, and Lab RLD systems transfer effluent to the EMF in the DFLAW configuration. [ALARA]

Verification: Verification is expected to be achieved through the following:

Verif. Method	Verif. By	Plan	Notes/Comments
R	**ENG**	Review the design to verify the EMF is designed to accept, store, and treat effluent from the LAW Facility and Lab.	

3.4.4.2 Interface with LERF/ETF

Requirement: The EMF shall be capable of transferring dilute effluent in accordance with the waste acceptance criteria identified in ICD-06 to LERF/ETF for further processing and treatment. [Section 6.1.4, BOD] [Sections 1.2, 2.1, ICD-06] [Section 18, ORD] [Section C.7(a)(6), WTP Contract] (Table 2-1, A.1)

Basis Discussion: Dilute effluent produced by the DEP system is collected and sampled prior to being sent to LERF/ETF for further processing in accordance with ICD-06. Discharge of the radioactive, dangerous liquid effluents is within the limits specified in HNF-3172, *Liquid Waste Processing Facilities Waste Acceptance Criteria*.

Verification: Verification is expected to be achieved through the following:

Verif. Method	Verif. By	Plan	Notes/Comments
R	**ENG**	Review the design to verify the EMF's capability to transfer dilute effluent to LERF/ETF in accordance with the waste acceptance criteria identified in ICD-06.	

3.4.4.3 DELETED.

3.4.4.4 Interface with Tank Farms

Requirement: The EMF shall be capable of transferring untreated evaporator feed and concentrated effluent to Tank Farms, as well as transfer line drains/flushes, for storage. [Sections 6, 6.1.2, 6.1.4, BOD] (Table 2-1, A.1)

Basis Discussion: The primary flow path for concentrated effluent is return to the LCP system for blending with TOC waste feed; however, the option to return concentrated effluent to Tank Farms is provided in the event that the LAW Facility cannot receive concentrated effluent from EMF. Untreated evaporator feed can also be returned to Tank Farms, along with any associated transfer line drain/flushes.

Verification: Verification is expected to be achieved through the following:

Verif. Method	Verif. By	Plan	Notes/Comments
R	**ENG**	Review the design to verify the EMF's capability to transfer untreated evaporator feed, concentrated effluent, and transfer line drains/flushes to Tank Farms.	

3.4.4.5 DELETED.

3.4.4.6 DELETED.

3.4.4.7 Interface with Chemical Reagents

Requirement: The EMF design shall support the receipt and storage of anti-foam, sodium hydroxide, and sodium nitrite reagent. [Section 6.4, BOD] (Table 2-1, F.1)

Basis Discussion: Sodium hydroxide and sodium nitrite are used to adjust the feed and concentrated effluent chemistry to allow for transfer to Tank Farms or the LAW Facility. Anti-foam reagent is supplied to the DEP system to control foam generation in the waste within the evaporator.

Verification: Verification is expected to be achieved through the following:

Verif. Method	Verif. By	Plan	Notes/Comments
R	ENG	Review the EMF design to verify the ability to support the receipt and storage of the chemical reagents.	

3.4.4.8 Interface with Electrical Distribution System (MVE)

Requirement: The EMF electrical power distribution system shall be supplied normal power from the BOF MVE system by 13.8 kV feeders. [Section 8.3.1, BOD] (Table 2-1, F.1)

Basis Discussion: The EMF design provides the space to accommodate the electrical equipment required to receive 13.8 kV power from the BOF MVE system. However, the electrical power distribution requirements associated with EMF are contained in 24590-WTP-3ZD-MVE-00001, *LAW, BOF, and LAB Medium Voltage Electrical (MVE) Low Voltage Electrical (LVE) and DC Electrical (DCE) System Design Description*.

Verification: Verification is expected to be achieved through the following:

Verif. Method	Verif. By	Plan	Notes/Comments
R	ENG	Review the design to verify the EMF's electrical power is supplied by the BOF MVE system.	

3.4.4.9 Interface with Grounding Electrical System (GRE)

Requirement: The EMF shall interface with the WTP GRE system to provide electrical ground and lightning protection to the facility. Electrical equipment, building steel, metal components, and metallic enclosures containing electrical apparatus that are likely to become energized under abnormal conditions shall be effectively grounded by direct or indirect connection to the building steel, embedded rebar, or the building grounding system. [Sections 8.8.1.1, 8.8.1.3, 8.8.2, BOD] (Table 2-1, D.1) (Table 2-1, D.2) (Table 2-2, G.1) (Table 2-3, F.1) (Table 2-4, H.1)

Basis Discussion: A lightning strike at the WTP site is considered a credible event. Providing a grounding and lightning protection system for the EMF ensures that the effects of a lightning strike or a power surge on the facility and facility workers are mitigated. System-level requirements associated with the design and testing of the GRE system are contained in 24590-WTP-3ZD-GRE-00001, *System Design Description for the Grounding and Lightning Protection Electrical System*.

Verification: Verification is expected to be achieved through the following:

Verif. Method	Verif. By	Plan	Notes/Comments
R	ENG	Review the design to verify the inclusion of the GRE system in the EMF.	
R	ENG	Review the design to verify that electrical equipment, building steel, metal components, and metallic enclosures containing electrical apparatus likely to become energized under abnormal conditions are grounded by direct or indirect connection to the building steel, embedded rebar, or the building grounding system.	

3.4.4.10 DELETED.

3.4.4.11 DELETED.

3.4.5 Other Technical, Specialty, Operations and Maintenance Requirements

3.4.5.1 Required Service Life

3.4.5.1.1 Facility 40-Year Design Life

Requirement: The EMF shall have a 40-year operating design life. [Section C.7(a)(1), WTP Contract] [Section 10.3.4.3, BOD]

Basis Discussion: This requirement covers the facility structure. Design life requirements for internal systems are contained in other sections of this document. [ALARA]

Verification: Verification is expected to be achieved through the following:

Verif. Method	Verif. By	Plan	Notes/Comments
R	ENG	Review the design to verify construction materials for the facility structure and internal structure associated with confinement area boundaries are specified or demonstrated for a 40-year service life.	

3.4.5.2 Specialty Requirements

3.4.5.2.1 Floor Drain System

Requirement: Floor drains or sumps shall be provided in areas requiring eyewash and safety shower stations to collect water drainage from eyewash and shower usage and testing. A floor drain system shall also be provided in process areas to dispose of leakage, fire water, and wash-down liquids. [Sections 10.2, 13.1, ORD] (Table 2-1, C.1)

Basis Discussion: A means to remove waste water from eyewashes and shower stations, as well as the capability to dispose of leakage, fire water, and wash-down liquids, must be provided within the EMF. Employing a system of sumps ensures that the waste water is routed to the appropriate location for further treatment/processing.

Verification: Verification is expected to be achieved through the following:

Verif. Method	Verif. By	Plan	Notes/Comments
R	**ENG**	Review the EMF design to verify all areas with eyewashes and safety showers are equipped with a floor drain or sump.	
R	**ENG**	Review the EMF design to verify all process areas are equipped with a floor drain system to dispose of leakage, fire water, and wash-down liquids.	

3.4.5.3 Monitoring, Controls, and Communication

3.4.5.3.1 Interface for Monitoring and Controls

Requirement: The EMF shall interface with the LAW Facility control room (FCR) for monitoring and control of applicable facility and system SSCs during operations in the DFLAW configuration. [Sections 7.2.1, 7.2.1.2.1, BOD] (Table 2-1, G.3)

Basis Discussion: The EMF does not contain its own control room, as control of the EMF is provided through the LAW FCR. Refer to 24590-LAW-3ZD-20-00002, *LAW Facility Design Description*, for requirements associated with control and monitoring of the EMF from the LAW FCR during operations in the DFLAW configuration. [ALARA]

Verification: Verification is expected to be achieved through the following:

Verif. Method	Verif. By	Plan	Notes/Comments
R	**ENG**	Review the design to verify that an interface is provided with the LAW FCR for the monitoring and control of facility and system SSCs during operations in the DFLAW configuration.	

3.4.5.3.2 Interface for Standby Monitoring and Controls

Requirement: The EMF shall have the capability to interface with a standby control room (SCR) in the Lab for monitoring and control of applicable facility and system SSCs during operations in the DFLAW configuration. [Section 11.1, ORD] (Table 2-1, G.3)

Basis Discussion: During DFLAW operations, control and monitoring of the EMF is from the LAW FCR. The capability to interface with the SCR at the Lab ensures that monitoring and control of operating facilities, including EMF, is maintained in the event of adverse conditions in the LAW FCR. [ALARA]

Verification: Verification is expected to be achieved through the following:

Verif. Method	Verif. By	Plan	Notes/Comments
R	**ENG**	Review the design to verify that the EMF has the capability to interface with a standby control room in the Lab for the monitoring and control of facility and system SSCs during operations in the DFLAW configuration.	

3.4.5.3.3 Electrical and Instrument Equipment Rooms

Requirement: The EMF electrical and instrument equipment rooms shall have the following:

- Telephone communications
- Connection points for engineer workstations for software and equipment maintenance in instrument rooms
- Connection points for computerized access to WTP information networks, and direct actuation for drives through motor control centers

[Section 11.7, ORD] (Table 2-1, G.3)

Basis Discussion: The EMF interfaces with the CME system to provide the required communication features.

Verification: Verification is expected to be achieved through the following:

Verif. Method	Verif. By	Plan	Notes/Comments
R	**ENG**	Review the EMF design to verify it provides all capabilities for electrical and instrument equipment rooms listed in the requirement.	

3.4.5.4 Safeguards and Security

3.4.5.4.1 Access Control

Requirement: The EMF shall include control over personnel access to the facility. Exterior access points shall be limited to the minimum number required to support the function of the facility. [Section 13.2, ORD] (Table 2-1, G.3)

Basis Discussion: None.

Verification: Verification is expected to be achieved through the following:

Verif. Method	Verif. By	Plan	Notes/Comments
R	**ENG**	Review the design to verify access control features are provided.	
T	**SU/ COM**	Perform a test to verify the proper functioning of the access control system to meet security requirements.	Safeguards and Security to participate in or review results of access control testing. This is expected to be accomplished through individual system testing to be tracked for the overall facility.

3.4.5.4.2 Perimeter Fence

Requirement: A perimeter fence line shall define the "Operating Island," road, parking, and pedestrian accessways, and other boundaries that are required to separate the construction activities from the DFLAW early operation activities. The fence shall also act as a means to control access through gates or other entrances to the active portion of the facility at all times (WAC 173-303-310[2][c]). [Section C.7(d)(4)(iii), WTP Contract] [Section 14.15, BOD] [Section 6.1.3, DWP]

Basis Discussion: Although the perimeter fence is installed in the BOF yard which is subject to the requirements of 24590-BOF-3YD-50-00002, *Facility Description for the Balance of Facilities*, this requirement is directly applicable to the DFLAW operating configuration and therefore is verified in this document. These separate zones are necessary as they create access control between the DFLAW operations team and the Construction organization for personnel safety and security.

Verification: Verification is expected to be achieved through the following:

Verif. Method	Verif. By	Plan	Notes/Comments
R	**ENG**	Review the design to verify the perimeter fence separates the construction activities from the DFLAW early operation activities.	

3.4.5.4.3 Security System Integration with VOIP

Requirement: The EMF security systems shall be integrated into the Voice Over Internet Protocol (VOIP) system. [Section 8.11, BOD]

Basis Discussion: Integration of the EMF security systems with the VOIP system is consistent with the design of the other WTP facility security systems.

Verification: Verification is expected to be achieved through the following:

Verif. Method	Verif. By	Plan	Notes/Comments
R	**ENG**	Review the design to verify that EMF security systems are integrated into the VOIP system.	

3.4.5.4.4 Boundary Signs

Requirement: Signs shall be posted at each entrance to the active portion, and at other locations, in sufficient numbers to be seen from any approach to the active portion. Additionally, signs shall be posted on entrances and exits to enclosed buildings where dangerous or mixed waste is actively managed. Signs shall bear the legend, "Danger - Unauthorized Personnel Keep Out," or an equivalent legend, written in English and shall be legible from a distance of at least 25 feet or more (WAC 173-303-310(2)(a)). [Section 14.15, BOD] [Section 6.1.2, DWP]

Basis Discussion: During operations in the DFLAW configuration, the active portion of the WTP site (referred to as the "Operating Island") is enclosed by a perimeter fence. Signage on the perimeter fence that surrounds the "Operating Island" identifies the active portion of the WTP site to site personnel who may be supporting construction activities in other areas of the WTP site.

Verification: Verification is expected to be achieved through the following:

Verif. Method	Verif. By	Plan	Notes/Comments
R	**ENG**	Review the fence boundary design to verify inclusion of signage at each entrance for the identification of the active portion of the facility to site personnel, as well as on entrances and exits to enclosed buildings where dangerous or mixed waste is actively managed.	

3.4.5.5 Operations Requirements

The EMF is exempted from providing access for the physically handicapped. Therefore, no verification is required. [Section 10.3.4.9, BOD]

3.4.5.5.1 General Facility Requirements

Requirement: The EMF shall comply with the following general requirements if not specifically covered elsewhere in this document:

- Storage pads shall be provided for secondary waste drums awaiting pickup.
- General storage areas shall be provided for supplies and equipment needed to operate the plant.

[Sections 10.3.5, 10.5, 13.1, ORD] (Table 2-1, C.2) (Table 2-1, E.1) (Table 2-1, E.2) (Table 2-1, E.3) (Table 2-1, E.4)

Basis Discussion: The EMF includes storage facilities for miscellaneous operations support equipment and supplies depending on the level of support required. Secondary solid waste produced at the EMF includes equipment that is normally replaced during operations such as filters.

Verification: Verification is expected to be achieved through the following:

Verif. Method	Verif. By	Plan	Notes/Comments
R	**ENG**	Review the design to verify that general storage space is provided for supplies and equipment needed to operate the plant.	Operations to participate in the design review.
R	**ENG**	Review the design to verify that storage pads are provided for secondary waste drums.	

3.4.5.5.2 DELETED.

3.4.5.5.3 Breathing Service Air Considerations

Requirement: The EMF design shall provide breathing service air capabilities in C2 or C2/C3 subchange rooms for maintenance or recovery operations in C3 and C5 areas. The facility shall provide the following:

- Wall/door penetrations available to alleviate doors needing to be propped open and hoses potentially being pinched and damaged.
- Protective access door remains open and a second non-shielded door with access ports to allow hoses to be routed into area without being pinched.

- Access points to C3 and C5 areas to support manned entries for equipment recovery and maintenance evolutions, both normal (preventive) and corrective. Additional stations may be added to account for changing or unknown conditions during operation of facilities.

[Section 14.6, ORD] (Table 2-1, F.1)

Basis Discussion: The design is expected to incorporate, to the extent practical, accessibility for maintenance or recovery operations in designated C3 and C5 areas. [ALARA]

Verification: Verification is expected to be achieved through the following:

Verif. Method	Verif. By	Plan	Notes/Comments
R	**ENG**	Review the design to verify facility layout and design for placement of breathing air access points, as required.	

3.4.5.5.4 DELETED.

3.4.5.5.5 Mobile Mechanical Lifting Equipment

Requirement: The facility shall provide for installed equipment or space for mobile equipment to provide mechanical lifting capability for any routine or anticipated lifts of equipment or supplies that exceed 40 lb. [Section 8.1.1, ORD] (Table 2-1, E.4)

Basis Discussion: Routine manual lifting of more than 40 lb of equipment or materials is to be avoided where possible per NIOSH Lifting Guide, 1991. The number of lifts, location, and how far the load is to be carried may be considered in determining the type and location of lifting equipment needed.

Verification: Verification is expected to be achieved through the following:

Verif. Method	Verif. By	Plan	Notes/Comments
R	**ENG**	Review the design to verify that anticipated or routine lifts of equipment and materials of more than 40 lb are provided with the capability to use installed or mobile mechanical lifting equipment.	Document in an evaluation or assessment report. Operations or Plant Engineering to participate in the evaluation or assessment.

3.4.5.5.6 Hoists

Requirement: The EMF shall include hoists that are located to remove equipment designed to be replaced during the operating life of the facility. [Section 20.0, ORD]

Basis Discussion: Hoists should be located throughout the facility in support of the anticipated maintenance and removal of EMF equipment.

Verification: Verification is expected to be achieved through the following:

Verif. Method	Verif. By	Plan	Notes/Comments
R	**ENG**	Review the design to verify hoists have been included in the design to facilitate removal and replacement of failed components.	

3.4.5.5.7 Engineered Anchor Points

Requirement: Engineered anchor points shall be provided to accommodate the use of rigging, if required. Fall protection or tie-off points shall be provided in appropriate locations. [Section 14.16, ORD]

Basis Discussion: Provisions are included in the design to ensure all equipment is maintainable in the event that platforms and hoists do not provide adequate coverage.

Verification: Verification is expected to be achieved through the following:

Verif. Method	Verif. By	Plan	Notes/Comments
R	**ENG**	Review the design to verify that engineered anchor points are provided, if required, and fall protection or tie-off points are included.	

3.4.5.5.8 Hoist Operator Controls

Requirement: Standardized operator controls shall be provided between EMF hoists as much as possible to avoid errors that might occur when moving from one hoist to another. Hoists shall be designed with automation only as it adds value to the operation. Otherwise, they shall be operated directly. [Sections 14.1, 14.16, ORD]

Basis Discussion: Providing standardized controls that are remotely operable minimizes training required for operators and promotes worker safety by allowing operators to be removed from the proximity of loads being lifted. [ALARA]

Verification: Verification is expected to be achieved through the following:

Verif. Method	Verif. By	Plan	Notes/Comments
R	**ENG**	Review the design to verify similar control units are provided for similar equipment.	
R	**ENG**	Review the design to verify automation is included in the design of hoists only where value is added to the operation.	

3.4.5.5.9 Standardization of Hoists

Requirement: Components shall be standardized and interchangeable between hoists to the maximum extent possible. [Section 14.16, ORD]

Basis Discussion: Providing standardized hoist components minimizes the spare part inventory and supports the maintainability of common mechanical handling equipment used at WTP. [ALARA]

Verification: Verification is expected to be achieved through the following:

Verif. Method	Verif. By	Plan	Notes/Comments
R	**ENG**	Review the design to verify similar components are provided for similar hoists.	Operations to participate in a facility-wide review of hoist design approaches.

3.4.5.5.10 Hoist Brakes

Requirement: Brakes on hoists shall be designed to set when power is off. [Section 14.16, ORD]

Basis Discussion: To prevent the cranes from travelling along the rails when not in operation, the brakes on all drive functions are set when the power is off. [ALARA]

Verification: Verification is expected to be achieved through the following:

Verif. Method	Verif. By	Plan	Notes/Comments
R	**ENG**	Review the design to verify brakes are set when crane and hoist power is off.	Operations to participate in a facility-wide review of hoist design approaches.
T	**SU/COM**	Perform testing to verify hoist brakes engage with a loss of power.	

3.4.5.5.11 Decontamination of Cranes/Hoists

Requirement: Where decontamination is applicable, a means for decontamination of hoists shall be provided. Electrical and mechanical parts and controls of the hoists shall not be degraded as a result of decontamination. [Section 14.16, ORD] (Table 2-1, G.1)

Basis Discussion: The EMF contains hoists to support the lifting and transport of system equipment inside the facility. The ability to decontaminate hoists supports the maintenance strategy for the facility and ensures worker exposure is ALARA. [ALARA]

Verification: Verification is expected to be achieved through the following:

Verif. Method	Verif. By	Plan	Notes/Comments
R	**ENG**	Review the design to verify a means of decontamination, including disposal of waste liquid, is available for hoists located in the EMF.	
R	**ENG**	Review the design of the EMF hoists to verify that electrical and mechanical parts are compatible with the expected decontamination methods.	

3.4.5.5.12 Survey Stations

Requirement: Portable (hand-held) self-survey instruments and step-off pads shall be required (at a minimum) at designated exits from areas of contamination potential. [Section 12.7.1, ORD]

Basis Discussion: Inclusion of portable survey stations at designated egress points from potentially contaminated areas within the EMF mitigates the risk of contaminated materials being transported to non-contaminated areas. [ALARA]

Verification: Verification is expected to be achieved through the following:

Verif. Method	Verif. By	Plan	Notes/Comments
R	**ENG**	Review the design to verify portable self-survey instruments and step-off pads are provided at exits from areas of contamination potential.	

3.4.5.5.13 Changing/Sub-change Areas

Requirement: Sub-change rooms and (or) airlocks shall be provided for personnel movement from a non-contaminated area to a contaminated area. These rooms shall provide space for changing between personal clothing and contractor-provided clothing and into radiological protective clothing, directly adjacent to controlled radiological areas. [Sections 10.3.1, 13.1, ORD] [Section 12.3.4, BOD] (Table 2-1, E.1)

Basis Discussion: Facility workers require access to C3 and C5 areas within the EMF to perform periodic maintenance and repairs. Providing an area within the EMF that supports change-out of radiological protective clothing prevents the spread of contamination to uncontaminated areas. This requirement only applies to normal access doors (not emergency exits). [ALARA]

Verification: Verification is expected to be achieved through the following:

Verif. Method	Verif. By	Plan	Notes/Comments
R	**ENG**	Review the design to verify an area is available within the EMF to change into radiological protective clothing to support personnel movement from a non-contaminated area to a contaminated area.	

3.4.5.5.14 Packaged Control Systems

Requirement: Packaged control systems shall have the capability to be placed in manual mode so that individual devices can be selected and operated at the local control points. [Section 11.12.3.5, ORD]

Basis Discussion: Packaged control systems constitute standalone, vendor supplied control systems. The ability to place packaged control systems in manual mode allows for ease and convenience of operation from the local control point.

Verification: Verification is expected to be achieved through the following:

Verif. Method	Verif. By	Plan	Notes/Comments
R	**ENG**	Review the design to verify packaged control systems can be placed in manual mode and individual devices selected and operated at the local control points.	

3.4.5.5.15 Manual/Local Mode

Requirement: Maintenance control (also called direct control) shall be available as a means of operating devices independent of the control systems from a local panel, pendant, or motor control center, where appropriate. Systems used to control and monitor plant processes and equipment shall include direct actuation for drives via a maintenance control switch. [Sections 11.10, 11.12.3.6, ORD]

Basis Discussion: Control systems used for direct actuation of drives include systems controlling drive motors for fans, pumps, etc. Maintenance control is used in the event of control system failure or to perform operational tests as a result of equipment repair or maintenance.

Verification: Verification is expected to be achieved through the following:

Verif. Method	Verif. By	Plan	Notes/Comments
R	**ENG**	Review the design to verify maintenance control is available as a means of operation independent of a local panel, pendant, or motor control center, where appropriate.	
R	**ENG**	Review the design to verify systems used to control and monitor plant process/equipment include maintenance control switches for direct actuation of drives.	

3.4.5.5.16 Emergency Stops (E-Stops)

Requirement: Where operators will be co-located with operating equipment and physical injury is credible, dedicated emergency-stop (E-Stop) buttons shall be provided near the machinery. Each individual E-Stop provided in the EMF, however configured, shall report its individual status back to its control system. Equipment with MHJ connection shall report E-stop status both to the MHJ and to the local control system. Equipment with no MHJ connection shall only provide E-stop status to the local control system. When the E-stops are activated, the E-stop circuit shall remain in a shutdown state until the circuit is physically reset to prevent equipment restart while the dangerous condition exists. [Section 7.3.9.1, BOD] [Section 11.12.5.3, ORD]

Basis Discussion: Guidance for the application of E-stops for equipment at the WTP is provided in 24590-WTP-ES-J-11-001. An evaluation of individual SSCs (e.g., hoists) within the EMF is to be performed to determine where E-Stops are required in the design.

Verification: Verification is expected to be achieved through the following:

Verif. Method	Verif. By	Plan	Notes/Comments
A	**ENG**	Evaluate any potential credible events that may lead to operator injury for every piece of equipment located in normally accessible areas to determine which equipment requires E-stops.	Operations and ES&H to participate in review of equipment requiring E-stops.
R	**ENG**	Review the design to verify incorporation of emergency stops on equipment deemed to have a credible injury hazard.	
R	**ENG**	Review the design to verify individual E-stops report individual status to the appropriate control system and the equipment remains in a shutdown state until the circuit is physically reset.	
T	**SU/COM**	Perform a test to verify the emergency stop capability to (a) report status to the appropriate control system, (b) stop equipment, and (c) remain in a shutdown state until the circuit is physically reset to prevent equipment restart while the dangerous condition exists.	

3.4.5.5.17 DELETED.

3.4.5.5.18 Cable Routing

Requirement: Instrument cables shall be routed so that they:

- Do not interfere with the maintenance or removal of unrelated equipment
- Avoid hot environments and fire risk areas
- Are not subject to mechanical abuse

[Section 16.1, ORD]

Basis Discussion: Routing cables such that they are protected from hazards supports maintaining the cables and prevents the need for periodic replacements due to wear and abuse that can occur within the facility environment.

Verification: Verification is expected to be achieved through the following:

Verif. Method	Verif. By	Plan	Notes/Comments
R	**ENG**	Review the cable routing design to verify cables (a) do not interfere with maintenance or removal of unrelated equipment, (b) avoid hot environments and fire risk areas, and (c) are not subject to mechanical abuse.	Plant Engineering or Operations to participate in review.

3.4.5.5.19 Exhaust Filtration Equipment Location

Requirement: Exhaust filtration equipment shall be located at or near individual enclosures to minimize long runs of ventilation ducting. [Section 20, ORD]

Basis Discussion: Placing filtration equipment in close proximity to the final common point for exhaust streams, gloveboxes, fume hoods, etc. minimizes long runs of ducting where contamination could accumulate. Minimizing long runs of ductwork supports the efficient deactivation, closure, decontamination and decommissioning of the facility and system components upon mission completion.

Verification: Verification is expected to be achieved through the following:

Verif. Method	Verif. By	Plan	Notes/Comments
R	**ENG**	Review the ventilation ductwork design to verify exhaust filtration equipment is located at or near individual enclosures.	

3.4.5.5.20 Provisions for Material and Equipment Import/Export

Requirement: The facility design shall accommodate the use of equipment such as fork lifts, mechanical augers and air/vacuum transfer equipment for the import and handling of raw materials and equipment into the facility in order to prevent ergonomic related injuries. [Section 7.1, ORD] (Table 2-1, E.4)

Basis Discussion: Designing the facility to support the use of lifting and transfer devices ensures that raw materials and equipment can be safely imported and exported from the facility without the risk of injury to the facility worker.

Verification: Verification is expected to be achieved through the following:

Verif. Method	Verif. By	Plan	Notes/Comments
R	**ENG**	Review the layout design of the facility to verify that lifting and transfer devices can be accommodated for the import and export of raw materials and equipment as necessary.	

3.4.5.5.21 Noise

Requirement: The EMF areas housing equipment shall be designed to be below the American Conference of Governmental Industrial Hygienists limits for continuous occupancy without personal protective equipment. Where this is impractical, the design shall minimize noise exposure levels to allow continuous occupancy with personal protective equipment up to the use of double hearing protection (109 dBA) when the equipment is in operation. Equipment within rooms shall be designed to be below 109 dBA when equipment is in operation. [Sections 8.1.5, 10.5, ORD]

Basis Discussion: Rooms with equipment that require personal protective equipment for entry are considered "high-noise areas use double hearing protection". Exemptions to this requirement may be granted in accordance with Section 2.1 of the ORD for equipment within rooms in excess of 109 dBA based on an Operations evaluation of the activities to be performed in that room to ensure facility operations are not impacted (maintenance activities for technical safety requirement equipment, operator and maintenance staffing, production rates, etc.).

Verification: Verification is expected to be achieved through the following:

Verif. Method	Verif. By	Plan	Notes/Comments
R	**ENG**	Review the design to verify that equipment within EMF occupied plant spaces is designed to be below 109 dBA when placed in operation.	
T	**SU/ COM**	Perform noise level measurements to verify normal operating noise levels are in accordance with the applicable codes and standards within EMF occupied plant spaces.	

3.4.5.6 Maintenance Requirements

3.4.5.6.1 Equipment Accessibility

Requirement: The EMF design shall include the following:

- Adequate clearances and headroom around equipment to accommodate maintenance and operation personnel and any encumbrances such as protective garments, respirators, portable lifting devices, and alignment equipment for pumps, etc.
- Equipment and plant structural elements such as columns and beams shall be arranged to allow access to equipment by maintenance personnel.
- Equipment, instrumentation, and electrical components located more than 5 ft from ground level shall have adequate space to allow for access with a ladder, portable man-lift, or scaffolding for operations and maintenance.

- Equipment, instrumentation, and electrical components that are 6 ft and over from floor level shall be provided with a permanent work platform with fixed ladder and stair access to perform operation and maintenance.
- In-plant controls shall be easily accessible.
- Adequate space and support provided for installing permanent and temporary shielding in areas where it may be needed. Dual trains of radioactive systems, for example, shall have adequate space to be separated by shielding and still permit access by maintenance and operation personnel.
- Space for movement of large pieces of equipment, temporary containment enclosures for change areas, and changeout of large equipment.
- Plant and equipment that contain dangerous (hazardous) wastes shall have inspection provisions. The capability to perform these inspections shall be designed and included in the layout.

[Sections 9.1, 10.5, 11.16, 14.13, ORD] [Sections 10.2.14, 11.3.1, BOD] (Table 2-1, E.1) (Table 2-1, E.2)

Basis Discussion: The maintenance strategy for the equipment in the EMF is hands-on only. Therefore, adequate provisions for operator interaction with equipment must be included in the design. Deviations from the above requirements may be granted by the Facility Operations Lead or Plant Operations Manager. The design is expected to incorporate, to the extent practical, human factors practices, including tool use, ergonomics, and equipment and material handling. [ALARA]

Refer to the following documents for approved EMF exemptions to this requirement:

- 24590-WTP-ORDX-OP-15-0031
- 24590-WTP-ORDX-OP-15-0050
- 24590-WTP-ORDX-OP-15-0051
- 24590-WTP-ORDX-OP-16-0056
- 24590-WTP-ORDX-OP-16-0003
- 24590-WTP-ORDX-OP-16-0009
- 24590-WTP-ORDX-OP-16-0021
- 24590-WTP-ORDX-OP-16-0022
- 24590-WTP-ORDX-OP-16-0023
- 24590-WTP-ORDX-OP-16-0025
- 24590-WTP-ORDX-OP-16-0051
- 24590-WTP-ORDX-OP-17-0010
- 24590-WTP-ORDX-OP-17-0011
- 24590-WTP-ORDX-OP-17-0013
- 24590-WTP-ORDX-OP-17-0016
- 24590-WTP-ORDX-OP-17-0017
- 24590-WTP-ORDX-OP-17-0020
- 24590-WTP-ORDX-OP-17-0022
- 24590-WTP-ORDX-OP-17-0024

Verification: Verification is expected to be achieved through the following:

Verif. Method	Verif. By	Plan	Notes/Comments
R	**ENG**	Review the conceptual and detailed facility layout design to verify adequate equipment accessibility.	Operations to participate in review.

3.4.5.6.2 DELETED.

3.4.5.6.3 Equipment Location Supporting Maintenance

Requirement: Maintainable equipment components, such as drive motors, shall be located out of high radiation cave, cell, and bulge areas to the extent practical. [Section 7.1, ORD]

Basis Discussion: During normal operations, the EMF does not contain any high radiation areas (i.e., R5 areas). During off-normal operations, however, the lower level of the LAW effluent low point drain tank building has the potential to reach R5 area radiation levels. Locating maintainable equipment out of high radiation areas to the extent practical supports maintaining facility worker exposure levels ALARA. [ALARA]

Verification: Verification is expected to be achieved through the following:

Verif. Method	Verif. By	Plan	Notes/Comments
R	**ENG**	Review the design to verify maintainable equipment is located outside of high radiation areas to the extent practical.	Operations to participate in review.

3.4.5.6.4 Removal and Replacement Capabilities in High Radiation Areas

Requirement: Where there is potential for equipment failure within a high radiation area (not black cells), means shall be provided for recovery of that equipment. [Sections 8.1.3, 9.1, 14.1, ORD]

Basis Discussion: During normal operations, the EMF does not contain any high radiation areas (i.e., R5 areas). During off-normal operations, however, the lower level of the LAW effluent low point drain tank building has the potential to reach R5 area radiation levels. For this reason, capability is provided within the facility design for the removal and replacement of equipment contained in this area. Recovery is accomplished by using either routine remote maintenance or, where permissible, manned intervention. Manned intervention is not an acceptable means for routine maintenance, but the capability is designed into the facility for off-normal recovery operations. [ALARA]

Verification: Verification is expected to be achieved through the following:

Verif. Method	Verif. By	Plan	Notes/Comments
R	**ENG**	Review the design to verify components in high radiation areas can be maintained or replaced.	
T	**SU/ COM**	Perform a test to verify that the removal and replacement capabilities support replacement of necessary equipment in high radiation areas of the EMF.	This test is anticipated to be performed in conjunction with tests of the mechanical handling equipment.

3.4.5.6.5 Welding Receptacles

Requirement: Three-phase 480 VAC welding type receptacles shall be located in maintenance areas and where in-place repair of process equipment might be required, as determined by Operations. [Section 8.6.3, BOD] [Section 16.1, ORD]

Basis Discussion: The location of the LVE system receptacles should factor in the EMF facility layout and the location of equipment where in-place repair might be required.

Verification: Verification is expected to be achieved through the following:

Verif. Method	Verif. By	Plan	Notes/Comments
R	**ENG**	Review the design to verify that welding type receptacles are located in maintenance areas and where in-place repair of process equipment might be required.	Operations to participate in the review.

3.4.6 Other Facility-Level Requirements

3.4.6.1 Waste Management

3.4.6.1.1 Secondary Waste Disposal

Requirement: All waste streams, including mixed waste (hazardous and radioactive), shall be identified, minimized, and have designated disposal routes. [Section 20.0, ORD] (Table 2-1, C.1)

Basis Discussion: The ability to implement and verify this requirement depends on the development of an analysis of all secondary waste streams anticipated to be generated and an associated management plan. Reports satisfy permit conditions but do not satisfy design requirements. [ALARA]

Verification: Verification is expected to be achieved through the following:

Verif. Method	Verif. By	Plan	Notes/Comments
R	**ENG**	Review the design to verify all requirements are met relative to supporting the management and disposal of all secondary wastes anticipated to be generated.	

3.4.6.1.2 Waste Management Design

Requirement: The waste management design strategy shall incorporate the following requirements:

- Comply with HNF-EP-0063, *Hanford Site Solid Waste Acceptance Criteria*.
- Most radioactive waste shall be considered as mixed waste, and the methods, equipment, and facilities for packaging and shipment of that type of waste shall be provided in the design.
- The use and storage of hazardous materials shall be minimized by limiting their quantities through design restrictions. These materials shall be controlled and located so that an accident or release of the materials does not jeopardize the safe conditions at WTP. Chemicals that have the potential to react shall be physically separated during storage.
- The generation of secondary wastes shall be minimized, including radioactive solid wastes, dangerous wastes, and nonradioactive and nondangerous liquid effluents.
- The design shall include appropriate disposal provisions for hydraulics fluids, oils, and refrigerants.
- Dangerous waste storage areas shall be provided in the waste accumulation areas of all facilities for both satellite accumulation areas and less-than-90-day storage areas. The location and space for waste segregation, packaging, and storage shall be clearly specified on plant layout drawings.
- Waste shall be segregated as near the source of the waste as practical.
- All radioactive solid waste packages sent to the DOE shall be designed to comply with either the Department of Transportation or approved Hanford Site Safety Analysis Reports for Packaging and the HNF-EP-0063 requirements.

[Section 18, ORD] (Table 2-1, C.2) (Table 2-1, E.3)

Basis Discussion: The ability to implement and verify this requirement depends on the development of an analysis of all secondary waste streams anticipated to be generated and an associated management plan. Reports satisfy permit conditions but do not satisfy design requirements. [ALARA]

Verification: Verification is expected to be achieved through the following:

Verif. Method	Verif. By	Plan	Notes/Comments
R	**ENG**	Review the design to verify all requirements are met relative to supporting the management of all secondary wastes anticipated to be generated.	

3.4.6.1.3 Permit and License Compliance

Requirement: The EMF shall interface with the information management systems to meet all documentation requirements during operation. [Section 8.2, ORD] (Table 2-1, F.1)

Basis Discussion: The design requirements originating in the WTP permits and licenses that are applicable to the EMF have been allocated to this SDD. However, the EMF must also interface with the information management systems to meet all documentation requirements for permit compliance.

Verification: Verification is expected to be achieved through the following:

Verif. Method	Verif. By	Plan	Notes/Comments
R	**ENG**	Review the design of the EMF to verify information management systems are provided to meet all documentation requirements during operation.	

3.4.6.2 Decommissioning

3.4.6.2.1 Design for Future Volume Reduction

Requirement: The EMF structures shall be designed, where possible, using construction materials amenable to volume reduction and eventual disposal. [Section 20, ORD]

Basis Discussion: Where possible, the EMF is to be constructed of materials that can be readily demolished and crushed or compacted for disposal, or that can be salvaged and reprocessed pending free release. This is a design objective lower in precedence than the need for the facility to be designed to survive design basis conditions and still maintain safe containment and confinement of hazardous materials. [ALARA]

Verification: Verification is expected to be achieved through the following:

Verif. Method	Verif. By	Plan	Notes/Comments
R	**ENG**	Review the design to verify the facility materials used are amenable to volume reduction and eventual disposal.	Operations to participate in verification.

3.4.6.2.2 Decontamination and Decommissioning Requirements

Requirement: The EMF design shall include process and facility design features to safely and efficiently facilitate deactivation, decontamination, decommissioning, and the *Resource Conservation and Recovery Act of 1976* closure of facilities. Specific design features to be considered to support decommissioning shall include facilities to changeout and decontaminate equipment during deactivation for those components designed to be changed out during their operating life. [Section C.7(a)(12), WTP Contract] [Section 11.10, BOD] [Section 20.0, ORD]

Basis Discussion: Design features that simplify and facilitate D&D, minimize contaminated equipment, and minimize the generation of radioactive waste during deactivation and D&D are identified during the planning and design phase based upon anticipated decommissioning methods. Consideration of design features in support of this requirement is documented through the ADR process. This is a design objective lower in precedence than the need for the facility to be designed to survive design basis conditions and still maintain safe containment and confinement of hazardous materials. [ALARA]

Verification: Verification is expected to be achieved through the following:

Verif. Method	Verif. By	Plan	Notes/Comments
R	**ENG**	Engineering/Operations review and acceptance of the conceptual and detailed designs of general facility requirements and any aspects of facility design supporting D&D.	

3.4.6.3 Equipment Standardization

Requirement: Whenever possible, standardized equipment shall be used between WTP facilities and within EMF for similar equipment performing similar duties to help improve operator familiarity, reduce maintenance training, minimize spare parts inventory, reduce maintenance procedures, and reduce design effort. [Sections 11.4.5, 12.6.2, BOD]

Basis Discussion: Equipment standardization is employed throughout the facility design where safety requirements and cost requirements can be satisfied. The WTP Project uses these standardized equipment designs whenever possible. Where identified as cost-efficient, the WTP Project develops new standardized equipment designs. [ALARA]

Verification: Verification is expected to be achieved through the following:

Verif. Method	Verif. By	Plan	Notes/Comments
R	**ENG**	Review the design to verify facility equipment conforms to the requirement for standardized equipment.	Plant Operations may participate in review.

3.4.6.4 Civil, Structural, and Architectural Design Requirements

3.4.6.4.1 Earthwork

Requirement: Temporary and permanent earthwork slopes, excavations, structural fill, soil, and foundations shall be designed in accordance with the requirements of the *RPP-WTP Geotechnical Investigation* report. [Sections 10.1.5.1, 10.1.5.3, 10.2.6, BOD]

Basis Discussion: The *RPP-WTP Geotechnical Investigation*, WTSC99-1036-42-17, was performed by Shannon & Wilson Inc. The report characterizes the subsurface soil conditions at the site to provide the basis for foundation and structural design.

Verification: Verification is expected to be achieved through the following

Verif. Method	Verif. By	Plan	Notes/Comments
R	**ENG**	Review the design of temporary and permanent earthwork slopes, excavations, structural fill, soil, and foundations to verify adherence to the requirements of the *RPP-WTP Geotechnical Investigation* report.	

3.4.6.4.2 Structural Design Methods

Requirement: Reinforced concrete shall be designed by the strength design method. Structural steel shall be designed by the allowable stress design method. [Section 10.2.5, BOD]

Basis Discussion: The strength design method is the primary method for reinforced concrete design in the United States. The use of the allowable stress design ensures that the stresses developed in the structure due to service loads do not exceed the elastic limit.

Verification: Verification is expected to be achieved through the following:

Verif. Method	Verif. By	Plan	Notes/Comments
R	**ENG**	Review the design of reinforced concrete to verify the use of the strength design method.	
R	**ENG**	Review the design of structural steel to verify the use of the allowable stress design method.	

3.4.6.4.3 Additional Energy Conservation Measures

Requirement: Additional energy conservation measures incorporated into the design of the EMF structure shall include the following:

- Exterior openings shall be weather stripped to minimize air leakage
- Personnel, equipment, and vehicular exterior access doors in conditioned buildings shall be insulated
- Vestibules shall be provided at all building entrances, where possible, to maintain positive or negative air pressure

[Section 10.3.4.8, BOD]

Basis Discussion: The above provisions supplement the energy conservation requirements of ASHRAE 90.1, *Energy Efficient Design of New Buildings except Low-Rise Residential Buildings.*

Verification: Verification is expected to be achieved through the following:

Verif. Method	Verif. By	Plan	Notes/Comments
R	**ENG**	Review the design of EMF buildings to verify the additional energy conservation measures are included.	

3.4.6.4.4 Structural Stability

Requirement: The EMF structures shall be evaluated for stability against sliding and overturning. [Section 10.2.9, BOD]

Basis Discussion: The design of EMF structures should meet acceptable factors of safety against sliding and overturning defined in 24590-WTP-DC-ST-01-001, *Structural Design Criteria*.

Verification: Verification is expected to be achieved through the following:

Verif. Method	Verif. By	Plan	Notes/Comments
R	**ENG**	Review the EMF structure design calculations to verify acceptable factors of safety against sliding and overturning are included.	

3.4.6.4.5 Deflection Limits

Requirement: Limitations for deflection of concrete and structural steel elements in EMF structures shall meet the requirements of the applicable design code referenced in the *Safety Requirements Document* (SRD). [Section 10.2.10, BOD]

Basis Discussion: None.

Verification: Verification is expected to be achieved through the following:

Verif. Method	Verif. By	Plan	Notes/Comments
R	**ENG**	Review the design of the EMF structures to verify inclusion of the required deflection limits.	

3.4.6.4.6 Building Separation

Requirement: Building separation in the EMF shall meet the requirements in the *Seismic Analysis and Design Criteria*. [Section 10.2.12, BOD]

Basis Discussion: Section 8.6 of 24590-WTP-DC-ST-04-001, *Seismic Analysis and Design Criteria*, describes the minimum separation distances of structures at the WTP based on the recommendation of the NRC-approved document *Seismic Analysis of Structures and Equipment for Nuclear Power Plants*.

Verification: Verification is expected to be achieved through the following:

Verif. Method	Verif. By	Plan	Notes/Comments
R	**ENG**	Review the design of EMF buildings to verify the required separation per the Seismic Analysis and Design Criteria.	

3.4.6.4.7 Seismic Proportioning and Detailing

Requirement: Seismic proportioning and detailing of concrete elements and structural steel members shall be in accordance with the *Seismic Analysis and Design Criteria*. [Section 10.2.13, BOD]

Basis Discussion: Section 8.7 of 24590-WTP-DC-ST-04-001, *Seismic Analysis and Design Criteria*, describes the governing codes and standards for seismic proportioning and detailing.

Verification: Verification is expected to be achieved through the following:

Verif. Method	Verif. By	Plan	Notes/Comments
R	**ENG**	Review the design of the EMF structures to verify adherence to the appropriate method for seismic proportioning and detailing, per the *Seismic Analysis and Design Criteria*.	

3.4.6.4.8 Dead Loads

Requirement: The dead loads used in the design of the EMF structure shall include the weight of the structure, built-in partitions, permanent equipment, piping, raceways, HVAC ductwork, and other permanent static loads. [Section 10.2.7, BOD]

Basis Discussion: Dead loads include static forces that are relatively constant for an extended period of time, such as the weight of all permanent components of the structure.

Verification: Verification is expected to be achieved through the following:

Verif. Method	Verif. By	Plan	Notes/Comments
R	**ENG**	Review the design of EMF structures for inclusion of the dead load considerations.	

3.4.6.4.9 Live Loads

Requirement: The live loads used in the design of the EMF structure shall include floor and roof area loads, dynamic loads from equipment, movable loads, laydown loads, cranes, monorails, forklifts, elevators, and moving vehicles. Minimum live loads shall comply with the applicable codes identified in the SRD. Drop loads shall be treated as live loads with impact. [Section 10.2.7, BOD]

Basis Discussion: Live loads include all the forces produced by the use and occupancy of a building and do not include construction and NPH loads such as wind load, snow load, earthquake load, ashfall load, or flood load.

Verification: Verification is expected to be achieved through the following:

Verif. Method	Verif. By	Plan	Notes/Comments
R	**ENG**	Review the design of EMF structures for inclusion of the live load considerations.	

3.4.6.4.10 Other Loads

Requirement: The following loads shall be included in the design of EMF structures:

- Static lateral earth pressures for all structures shall be calculated using the lateral earth pressure coefficients recommended in the *RPP-WTP Geotechnical Investigation* report
- Active lateral earth pressures shall be used in the stability evaluation of structures.
- Earthquake loads shall be evaluated in accordance with the *Seismic Analysis and Design Criteria*
- Thermal loads during normal operating and accident conditions shall be calculated using temperature gradients
- Fluid loads shall include loads due to the weight of fluids with defined densities and maximum heights
- Piping reaction loads due to normal operation shall be considered

[Sections 10.2.6, 10.2.7, BOD]

Basis Discussion: None.

Verification: Verification is expected to be achieved through the following:

Verif. Method	Verif. By	Plan	Notes/Comments
R	**ENG**	Review the design of EMF structures for inclusion of the required load considerations.	

3.4.6.4.11 Load Combinations

Requirement: The load combinations used in the design of EMF structures shall adhere to the following:

- The load combinations for the design of SC-IV reinforced concrete shall be based on the applicable codes identified in the SRD for SC-III reinforced concrete
- The load combinations for the design of SC-IV structural steel shall be based on the applicable codes identified in the SRD for SC-III structural steel
- The load combinations prescribed in the SRD shall be used to verify the allowable soil bearing capacity

[Sections 10.2.8.1, 10.2.8.2, 10.2.8.4, BOD]

Basis Discussion: None.

Verification: Verification is expected to be achieved through the following:

Verif. Method	Verif. By	Plan	Notes/Comments
R	**ENG**	Review the design of EMF structures for inclusion of the load combination considerations.	

3.4.6.4.12 Exterior Building Materials

Requirement: Selection and placement of exterior EMF building material types, treatments, colors, and roof slopes shall reflect a coordinated WTP site aesthetic to create a visually unified project campus. [Section 10.3.4, BOD]

Basis Discussion: None.

Verification: Verification is expected to be achieved through the following:

Verif. Method	Verif. By	Plan	Notes/Comments
R	ENG	Review the design of EMF buildings to verify coordination with the WTP site aesthetic.	

3.4.6.4.13 Building Colors

Requirement: EMF buildings shall be a neutral color that minimizes the visual/aesthetic impact on the surrounding environment. [Section 10.3.4, BOD] [Section 3.1.5, ICD-09]

Basis Discussion: None.

Verification: Verification is expected to be achieved through the following:

Verif. Method	Verif. By	Plan	Notes/Comments
R	ENG	Review the design of EMF buildings to verify the use of neutral colors in accordance with ICD 09.	

3.4.6.4.14 Interior Building Materials

Requirement: The interior building material products, salient features, sizes, and manufacturers (when necessary) shall be consistent throughout the EMF. [Section 10.3.4, BOD]

Basis Discussion: Standardizing building materials allows for ease of procurement and maintenance, and to reduces storage and handling requirements. Materials of particular importance are building envelope materials, roofing systems, interior finish materials, doors and door hardware/keying, signage, conveying systems, and plumbing fixtures.

Verification: Verification is expected to be achieved through the following:

Verif. Method	Verif. By	Plan	Notes/Comments
R	ENG	Review the design of EMF buildings to verify the standardization of building material products, salient features, sizes, and manufacturers.	

3.4.6.4.15 Material Durability

Requirement: Durable materials shall be selected for those interior and exterior EMF areas subject to equipment movement and operations of potential impact. [Section 10.3.4, BOD] [Section 10.1, ORD]

Basis Discussion: None.

Verification: Verification is expected to be achieved through the following:

Verif. Method	Verif. By	Plan	Notes/Comments
R	ENG	Review the design of the EMF buildings to verify the use of materials that are durable.	

3.4.6.4.16 Room and Door Numbering

Requirement: The EMF shall use the room and door numbering system that is consistent across all facilities throughout the WTP site. [Section 10.3.4, BOD] [Section 10.1, ORD]

Basis Discussion: None.

Verification: Verification is expected to be achieved through the following:

Verif. Method	Verif. By	Plan	Notes/Comments
R	ENG	Review the design of EMF buildings to verify the use of a consistent room and door numbering system.	

3.4.6.4.17 Loading Bay Weather Protection

Requirement: The EMF loading bay/dock shall be weather protected. [Section 13.1, ORD] (Table 2-1, D.1)

Basis Discussion: Weather protection provides for the safe receipt and shipment of supplies, waste, and equipment at the EMF. Exceptions to this requirement may be approved by the respective Facility Operations Lead or Commissioning Operations manager.

Verification: Verification is expected to be achieved through the following:

Verif. Method	Verif. By	Plan	Notes/Comments
R	ENG	Review the design of the EMF loading bay/dock to verify that it is weather protected.	

3.4.6.4.18 Exterior Door Awnings

Requirement: Awning-type structures shall be provided at personnel exterior doors located below eaves. [Section 13.1, ORD]

Basis Discussion: Awnings protect facility personnel from falling icicles. Exceptions to this requirement may be approved by the respective Facility Operations Lead or Commissioning Operations manager.

Verification: Verification is expected to be achieved through the following:

Verif. Method	Verif. By	Plan	Notes/Comments
R	ENG	Review the design of personnel exterior doors to verify that an awning is provided.	

3.4.6.4.19 Door Design for Life Safety

Requirement: Doors shall be designed to meet Life Safety codes for the force required to open them during normal and adverse ventilation conditions. [Section 13.1, ORD]

Basis Discussion: This requirement ensures that large, heavy doors or doors with differential pressure between zones are able to be opened and do not injure personnel.

Verification: Verification is expected to be achieved through the following:

Verif. Method	Verif. By	Plan	Notes/Comments
A	ENG	Perform an analysis to evaluate whether doors at the EMF comply with the opening force required by the Life Safety Code.	
R	ENG	Review the design to verify that doors at the EMF comply with the results of the analysis.	

3.4.6.4.20 Floor Design to Support Operations

Requirement: The EMF process facility floors shall be designed to accommodate the movement of loads to support operations and maintenance activities. [Section 13.1, ORD]

Basis Discussion: The LAW effluent process building floors should be designed to minimize severe slopes or obstructions that would prevent the movement of equipment (e.g. pallets with drums) throughout the building.

Verification: Verification is expected to be achieved through the following:

Verif. Method	Verif. By	Plan	Notes/Comments
R	ENG	Review the design of EMF process facility floors to verify the ability to accommodate the movement of loads to support operations and maintenance activities.	

3.5 General DEP System Requirements

3.5.1 Mission and Functional/Performance Requirements (Including States/Modes)

3.5.1.1 Throughput (Design and Treatment Capacity)

3.5.1.1.1 DEP System Production

Requirement: The DEP system shall be capable of supporting the LAW Facility design capacity of 30 metric tons of glass (MTG) per day and a treatment capacity of 21 MTG per day. [Section C.7(b)(2), WTP Contract]

Basis Discussion: The LAW Facility is designed to produce 30 MTG per day. While operating in the DFLAW configuration, the DEP system must be designed to collect, process, and dispose of secondary liquid effluents to meet the LAW Facility throughput production requirements.

Verification: Verification is expected to be achieved through the following:

Verif. Method	Verif. By	Plan	Notes/Comments
A	**ENG**	Perform an analysis to verify the DEP system throughput capacity supports LAW Facility design capacity of 30 MTG per day and a treatment capacity of 21 MTG per day.	
R	**ENG**	Review the design to verify conformance to the results of the analysis.	
T	**SU/ COM**	Perform a test to verify the capability to support the LAW Facility cold commissioning capacity testing criteria.	Expected to be met along with the LAW production requirement in the *LAW Facility Design Description*, 24590-LAW-3ZD-20-00002.

3.5.1.1.2 DEP System Receipt of Waste

Requirement: The DEP system shall be capable of collecting and treating liquid waste from the LAW RLD system, the LAW LVP system, the Lab RLD system, and from transfer line flushes and drains (including flushes/drains associated with Tank Farms and inter-facility transfers). [Sections 6.1.2, 6.1.4, BOD] (Table 2-2, A.3) (Table 2-2, C.1)

Basis Discussion: The DEP system collection of LAW Facility and Lab effluents is in support of the LAW Facility's capability of producing 30 MTG per day in the DFLAW configuration. The DEP system is designed to support the LAW Facility at full design capacity (30 MTG per day) and at a minimum of 70% availability (21 MTG per day).

Verification: Verification is expected to be achieved through the following:

Verif. Method	Verif. By	Plan	Notes/Comments
R	**ENG**	Review the design to verify the DEP system can collect and treat effluent from the sources stated in the requirement.	DEP system batch volume calculations and process throughput model to be used for verification of compliance with requirement.

3.5.1.1.3 DELETED.

3.5.1.1.4 DEP System Transfer of Concentrated Waste

Requirement: The DEP system shall be capable of transferring concentrated effluent to the LAW Facility, transferring concentrated effluent to Tank Farms, recycling concentrated effluent within the EMF, or transporting concentrate to tanker trucks. A viability, ALARA, and Safety study shall be performed prior to the use of tanker trucks. [Sections 6, 6.1.2, 6.1.4, 6.3.6, BOD] (Table 2-2, A.8.1)

Basis Discussion: Multiple disposal methods are provided for concentrated evaporator effluent in the event that one method becomes unavailable. The primary destination of the DEP system concentrated effluent is a return to the LAW Facility for waste processing. Requirements for this transfer line are contained in Section 3.14.1.2. Requirements for the transfer line to Tank Farms are contained in Section 3.14.1.3.

Verification: Verification is expected to be achieved through the following:

Verif. Method	Verif. By	Plan	Notes/Comments
R	**ENG**	Review the design to verify the DEP system is capable of returning concentrated effluent to the LAW Facility, transferring concentrated effluent to Tank Farms, recycling concentrated effluent within the EMF, or transporting concentrate to tanker trucks.	

3.5.1.1.5 Concentration of Liquid Effluent

Requirement: The DEP system shall be capable of concentrating the liquid effluent from LAW Facility (RLD system) and Lab (RLD system), as well as flushes/drains associated with Tank Farms and inter-facility transfers. [Sections 6.1.2, 6.1.4, BOD] (Table 2-2, A.4)

Basis Discussion: The ability to concentrate liquid effluents from the LAW Facility and Lab supports meeting the LAW Facility design capacity identified in Section 3.4.1.1.1 above for operations in the DFLAW configuration.

Verification: Verification is expected to be achieved through the following:

Verif. Method	Verif. By	Plan	Notes/Comments
A	**ENG**	Perform an analysis to verify the ability of the DEP system to concentrate the liquid effluent from the LAW Facility (RLD system) and Lab (RLD system), as well as flushes/drains associated with Tank Farms and inter-facility transfers.	
R	**ENG**	Review the design to verify conformance with the results of the analysis.	

3.5.1.1.6 LAW Facility Feed Line Flushing

Requirement: The DEP system shall be capable of flushing the feed line from the EMF to the LAW Facility with a combination of 5M sodium hydroxide and process condensate. [Section 6, BOD]

Basis Discussion: In the event that the TOC could become unavailable for timely transfers, the DEP system should have provisions to mitigate the high chlorine concentration of the evaporator concentrate on the Type 316L stainless steel piping. [ALARA]

Verification: Verification is expected to be achieved through the following:

Verif. Method	Verif. By	Plan	Notes/Comments
R	**ENG**	Review the design to verify that the DEP system is capable of flushing the feed line to the LAW Facility with a combination of 5M sodium hydroxide and process condensate.	

3.5.1.2 Design Life

3.5.1.2.1 Minimum Design Life

Requirement: Non-replaceable, non-maintainable, permanent DEP system plant equipment shall be designed for a minimum design life of 40 years, inclusive of maintenance. Design life of equipment shall consider the effects of chemical, radiological and thermal exposure. [Sections 11.1.1, 11.7.4, BOD]

Basis Discussion: Equipment and material selection is based on proven performance, value engineering principles, and fit-for-function principles. The selection of equipment and materials is further addressed in detail as the design progresses. Equipment design needs to address the routine environmental exposures under normal operations for non-safety equipment; this minimizes the need for equipment maintenance, exposure, and radiological waste generation in radiological areas. [ALARA]

Verification: Verification is expected to be achieved through the following:

Verif. Method	Verif. By	Plan	Notes/Comments
R	**ENG**	Review the design to verify the design life of non-safety non-replaceable, non-maintainable SSCs is documented in procurement documents and supported by supplier certificates of conformance.	

3.5.1.2.2 Materials of Construction and Erosion/Corrosion Design Parameters

Requirement: The DEP system SSCs shall be designed to include adequate allowance for erosion and corrosion. [Section 11.9, BOD]

Basis Discussion: The allowance for erosion/corrosion and applicable materials of construction are limited to those components that come into contact with the process fluids and that are required to maintain confinement/containment of those process fluids. Materials of construction that can withstand the erosive/corrosive low-activity waste effluents and chemicals are selected. The materials for the DEP system equipment and components should be selected based on the stream data presented in the process corrosion data sheet report. Refer to 24590-BOF-RPT-PR-15-001, *Direct Feed LAW Process Corrosion Data*, for the fluid characteristics of the process streams.

Verification: Verification is expected to be achieved through the following:

Verif. Method	Verif. By	Plan	Notes/Comments
A	**ENG**	Perform an analysis of materials used in DEP system SSCs that are in contact with the process fluids to verify they are acceptable for use in the operating environment and have adequate erosion and corrosion allowances.	Per corrosion evaluation(s) and pipe class sheet(s) for the DEP system SSCs in contact with the process fluids. (N1D and 3PB document types)
R	**ENG**	Review the design of the selected components used in the DEP system that are in contact with the process fluids to verify conformance with the analysis.	

3.5.1.3 Seismic Design

Requirement: The DEP system equipment and components shall be designed as non-safety, Seismic Category IV (SC-IV)/Performance Category 1 (PC-1). [Section H.53(c)(1), WTP Contract]

Basis Discussion: The designation of the EMF as SC-IV is a critical design input in the WTP Contract that supports completing the DFLAW configuration within cost and schedule targets. .

Verification: Verification is expected to be achieved through the following:

Verif. Method	Verif. By	Plan	Notes/Comments
R	**ENG**	Review the design to verify all DEP system equipment and components meet the non-safety, SC-IV/PC-1 requirements.	

3.5.1.4 Availability in the DEP and Supporting Systems

Requirement: The DEP system, along with its supporting systems, shall be designed with sufficient process redundancy and equipment reliability to support a minimum integrated facility availability equal to or greater than 70 percent. [Section C.7(b)(1), WTP Contract] [Section 11.4.2, BOD]

Basis Discussion: The LAW Facility treatment capacity is 21 metric tons per day at an overall DFLAW availability of 70%. Prior to startup and availability of the PT Facility, there is no process redundancy for delivery of feed to the LAW Facility. The DFLAW configuration, however, does provide process flexibility including bypass of the evaporator, and equipment redundancy for increased reliability in managing RLD and LVP system effluent disposal. Redundancy allows the failed equipment to be repaired and the facility to continue to operate. [ALARA]

Verification: Verification is expected to be achieved through the following:

Verif. Method	Verif. By	Plan	Notes/Comments
A	**ENG**	Perform model runs to verify the availability and operating efficiency of the DEP system using the DFLAW configuration.	Evaluation to be completed for integration between systems and facilities.

3.5.1.5 Environmental Conditions for DEP Non-Safety SSCs

Requirement: The DEP system equipment and components tagged non-safety shall be designed to operate within the conditions identified in Table 12-1 of the BOD if they are located indoors and within the conditions identified in Table 4-7 of the BOD if they are located outdoors. [Section 4.12, Table 4-7, Table 12-1, BOD] [Section 16.1, ORD]

Basis Discussion: Non-safety SSCs are designed to function as intended in the environmental conditions associated with their location. The EMF and all associated systems do not contain any safety class or safety significant SSCs.

Verification: Verification is expected to be achieved through the following:

Verif. Method	Verif. By	Plan	Notes/Comments
R	**ENG**	Review the design of indoor DEP system non-safety SSCs to verify compliance with BOD Table 12-1 conditions.	
R	**ENG**	Review the design of outdoor DEP system non-safety SSCs to verify compliance with BOD Table 4-7 conditions.	

3.5.1.6 Recycle Capability

Requirement: Strategic locations shall be identified within the DEP system process train to provide the capability to re-work/recycle effluent and the capability to transfer the contents of the downstream vessels back to other vessels. [Section 7.1, ORD] [Section 6.7.4, BOD]

Basis Discussion: In general, cross-connecting vessels at strategic locations in the DEP system provides process redundancy that improves reliability, operability, accessibility, and maintainability of the system. Recycling liquids within the process also minimizes the effluent volume discharged from the WTP.

Verification: Verification is expected to be achieved through the following:

Verif. Method	Verif. By	Plan	Notes/Comments
A	**ENG**	Perform an analysis to determine the vessels in the DEP system where the capability to transfer the contents of downstream vessels back to other vessels provides benefit to the re-work/recycle philosophy of the WTP.	
R	**ENG**	Review the design to verify cross-connections are provided at strategic vessel locations in the process system.	

3.5.2 Nuclear Safety, ALARA, Environmental, and Other Regulatory Requirements

None.

3.5.3 System Interface Requirements

None.

3.5.4 Other Technical, Specialty, Operations and Maintenance Requirements

3.5.4.1 DELETED.

3.5.4.2 Tank Farms Transfer Corrosion Mitigation

Requirement: The DEP system design shall include one of the following methods to meet ICD-31 corrosion mitigation control requirements for transfers to Tank Farms:

1. Design the capability to control via hydroxide concentration by:
    a. Provide the capability to control the effluent temperature ≤ 35 °C (or 95 °F) prior to transfer
    b. Provide the capability to control $[NO_3^-] \leq 1.5$ M
    c. Provide the capability to control $[SO_4^{2-}] \leq 0.2$ M
    d. Provide the capability to control total halide (F^- and Cl^-) concentration ≤ 0.25 M
    e. Provide the capability to adjust $[OH^-] > 1.0$ M
    f. Provide the capability to adjust $[NO_2^-] > 0.5$ M

OR

2. Design the capability to control via nitrite concentration by:
    a. Provide the capability to control the effluent temperature ≤ 35 °C (or 95 °F) prior to transfer
    b. Provide the capability to control $[OH^-] < 1.0$ M
    c. Provide the capability to control pH ≥ 12
    d. Provide the capability to control total halide (F^- and Cl^-) concentration / $[NO_3^-] > 0.03$
    e. Provide the capability to control $[NO_3^-] \leq 1.5$ M
    f. Provide the capability to control $[SO_4^{2-}] \leq 0.2$ M
    g. Provide the capability to control total halide (F^- and Cl^-) concentration ≤ 0.25 M
    h. Provide the capability to adjust $[NO_2^-]$ to the maximum value of $[NO_2^-] > 0.3$ M or $[NO_2^-] > 10$ x total halide (F^- and Cl^-) concentration

[Section 2.3, ICD-31] (Table 2-2, B.1)

Basis Discussion: In order to return evaporator concentrate to Tank Farms, the DEP system must chemically adjust unconditioned effluent to meet the requirements of ICD-31.

Verification: Verification is expected to be achieved through the following:

Verif. Method	Verif. By	Plan	Notes/Comments
R	**ENG**	Review the design to verify that the one of the two capabilities that are included in the requirement are met.	

3.5.4.3 Sampling and Adjustment of Effluent for Transfer to Tank Farms

Requirement: The DEP system shall have the capability to sample unconditioned effluent to determine the chemical additions required for a transfer to Tank Farms. The DEP system shall have the capability to make chemical additions to the unconditioned effluent as necessary to meet the corrosion control criteria identified in Table 4 of ICD-31. The DEP system shall provide the capability to sample the conditioned effluent on a DFLAW feed campaign basis in an EMF vessel or in the transfer pipeline to Tank Farms downstream of the chemical addition. [Sections 1.2, 2.3, 2.5.2, ICD-31] [Section 6.1.2, BOD] (Table 2-2, B.1)

Basis Discussion: The sample checks the concentrations of hydroxide, nitrite, nitrate, sulfate, chloride, and fluoride in the unconditioned effluent for comparison with the corrosion control criteria identified in Table 4 of ICD-31. After the necessary chemical additions are made, the conditioned effluent is sampled and analyzed for comparison with the waste compatibility criteria contained in Table-6 of ICD-31 to confirm the bounding waste profile is adequate.

Verification: Verification is expected to be achieved through the following:

Verif. Method	Verif. By	Plan	Notes/Comments
R	**ENG**	Review the design to verify the capability to sample the unconditioned effluent to determine the chemical additions required for a transfer to Tank Farms.	
R	**ENG**	Review the design to verify the capability to make chemical additions for compliance with Table 4 of ICD-31.	
R	**ENG**	Review the design to verify that the effluent being transferred to Tank Farms can be sampled on a DFLAW feed campaign basis within an EMF vessel or the transfer pipeline downstream of the chemical addition.	

3.5.4.4 DELETED.

3.5.4.5 System Flushing to Support Maintenance

Requirement: The DEP system equipment shall be designed to be flushed and drained to support contact maintainability and shall be located outside of high radiation areas to the extent practical. [Sections 14.1, 20, ORD] (Table 2-2, D.1)

Basis Discussion: The DEP system equipment is washed down and able to be worked on by maintenance workers without the help of robotics, cranes, or other mechanical equipment to the extent practical. [ALARA]

Verification: Verification is expected to be achieved through the following:

Verif. Method	Verif. By	Plan	Notes/Comments
R	**ENG**	Review the design to verify that DEP system equipment can be flushed and drained.	
R	**ENG**	Review the design to verify maintainable equipment is located outside of high radiation areas to the extent practical.	

3.5.4.6 Provisions for Extra Nozzles, Branches, or Spools

Requirement: The DEP system design shall accommodate provisions as necessary to support testing as identified in Appendix A. [Section 11.4.7, BOD] [Sections 19.6, 19.12, ORD]

Basis Discussion: Additional nozzles, branch lines, removable spools or other provisions that may be needed to support identified testing are to be accommodated in the design as jointly determined by the design agency, startup and commissioning during the design development and review process, with consideration given to the tests and demonstration activities required for requirement verification specified in Appendix A. This may include (but is not limited to) provisions to support the introduction or removal of fluids, gases, reagents, or simulants; or the availability of special test ports, sampling ports, or temporary instruments or instrument lines.

Verification: Verification is expected to be achieved through the following:

Verif. Method	Verif. By	Plan	Notes/Comments
R	**ENG/ SU/ COM**	Review the design to verify the requirement is met based on established tests and demonstrations to be performed during startup and commissioning.	

3.5.4.7 Isolation and Test Points

Requirement: Isolation and test points with drain and bleed valves shall be included in the DEP system design to allow for testing of plant items during normal operations and removal or replacement, as applicable. For work on high-energy systems (fluid systems with operating parameters greater than 200 °F and/or 500 psig.), a double block and bleed method of isolation shall be provided for all paths where the fluid could cross the work boundary involving hands-on maintenance. If isolation of the high-energy system impacts unit operations, the double block and bleed arrangements shall be applied to individual components. Isolating devices shall be capable of being locked out and shall provide visible indication of the device position required. [Section 11.5.1, BOD] [Sections 9.1, 19.14, ORD]

Basis Discussion: Isolation and test points that are needed to support testing are identified by the design agency, startup, and commissioning during the design development and review process, with consideration given to the tests and demonstration activities required for requirement verifications specified in Appendix A. Isolations and test points are provided within the design as necessary to support the testing plan. [ALARA]

Verification: Verification is expected to be achieved through the following:

Verif. Method	Verif. By	Plan	Notes/Comments
R	**ENG**	Review the design to verify isolation and test points with drain and bleed valves are installed to allow for testing of equipment during normal operations.	
R	**ENG**	Review the design to verify double block and bleed isolations are provided on all high energy systems where the fluid could cross the work boundary involving hands-on maintenance.	
R	**ENG**	Review the design to verify double block and bleed protections are provided on individual components where isolation of the high energy system impacts operations.	
R	**ENG**	Review the design to verify isolating devices are capable of being locked out and provide visible indication of the device position required.	

3.5.4.8 Manual Sample Points

Requirement: Sample points shall be included in the DEP system design to allow for manual sampling of waste to confirm effluent characteristics prior to transfer to LERF/ETF (ICD-06), Tank Farms (per ICD-31), and the LAW Facility during normal operations. Sampling systems shall be designed to preclude secondary hazards (e.g., loss of containment), and shall provide a disposal route for excess sample and secondary waste. The design of the sampling equipment shall not introduce a bottleneck in the processing of material. [Sections 6.1.4, 11.6.7, BOD] [Section 14.14, ORD] [Section 1.2, ICD-31] [Sections 2.3.3, 2.3.3.1, ICD-06] (Table 2-2, A.6.1) (Table 2-2, A.6.2)

Basis Discussion: The EMF uses manual sampling for all samples that need to be collected and analyzed. An exception to the ORD requirement for automatic sampling has been approved in 24590-WTP-ORDX-OP-15-0049.

Verification: Verification is expected to be achieved through the following:

Verif. Method	Verif. By	Plan	Notes/Comments
R	**ENG**	Review the design to verify sample points are included to allow for manual sampling of waste during normal operations.	
R	**ENG**	Review the design to verify that the sampling equipment maintains containment of sampled process fluids and provides a disposal route for excess effluent and secondary waste.	
R	**ENG**	Review the design to verify the sampling equipment does not introduce a bottleneck in material processing.	

3.5.4.9 Remote Valve Operation

Requirement: Remote valve operation from the LAW FCR shall be provided for DEP system valves located where accessibility is difficult, such as R5/C5 areas, and for valves used in routine operations. Manual valve reach rods, if necessary, shall be designed to be removed easily and, when reinstalled, only engage the valve in the correct alignment, using no more than two universals. Valves in remotely maintained areas that are repositioned to support processing (this includes support systems) shall have position indication from directly coupled positioning mechanisms unless other indications are available such as flow, level, pressure, etc. [Section 14.4, ORD] (Table 2-2, E.2) (Table 2-2, F.3)

Basis Discussion: Remote operation is used to ensure the WTP facilities' design achieves occupational doses that are ALARA. The need for "remote" operation does not apply to a black cell or pit only, but instead applies to an automatic valve or other feature needed to operate a valve at a distance. Valve position indication signals can be visual, mechanical, electric, or electronic based on the valve location and type of valve. [ALARA]

Verification: Verification is expected to be achieved through the following:

Verif. Method	Verif. By	Plan	Notes/Comments
R	**ENG**	Review the design to verify remote operation is provided for valves located in areas where accessibility is difficult (e.g., R5/C5 areas) and for valves used in routine operations.	
R	**ENG**	Review the design to verify manual reach rods are easily removed and engage in the correct alignment using no more than two universals.	
R	**ENG**	Review the design to verify valves in remotely maintained areas have position indication from directly coupled positioning mechanisms unless other indications are available.	

3.5.4.10 Automatic Valve Actuation

Requirement: Automatic valve operator closure devices shall be sufficiently slow to prevent damage from fluid-induced water hammer. [Section 11.7.4, BOD] [Section 14.4, ORD] [Section 2.1, ICD-06] [Section 2.1.1.1, ICD-30] [Sections 1.2, 2.1.1.1, ICD-31]

Basis Discussion: Damaging fluid pressure transients, often referred to as water hammer, are potentially generated upon the rapid closure of automatic valves due to the sudden change in liquid flow rates.

Verification: Verification is expected to be achieved through the following:

Verif. Method	Verif. By	Plan	Notes/Comments
R	**ENG**	Review the design to verify the valve stroke time conforms to the results of fluid transient studies conducted for the WTP.	

3.5.4.11 Valve Lockout

Requirement: DEP system valves shall be designed and procured where possible to support lockout using commercially manufactured devices other than chains. [Section 7.1, ORD]

Basis Discussion: The design of DEP system valves for compatibility with commercial off-the-shelf locking devices supports maintainability, operability, and testing of the valves throughout the life of the valve.

Verification: Verification is expected to be achieved through the following:

Verif. Method	Verif. By	Plan	Notes/Comments
R	**ENG**	Review the design to verify all valves are designed and procured where possible to support lockout using commercially manufactured devices other than chains.	

3.5.4.12 Decontamination Provisions

Requirement: The DEP system equipment subject to decontamination shall be designed to withstand this process without any reduction of functionality through degradation of the electrical, mechanical, or any other components involved. [Section 9.1, ORD]

Basis Discussion: Equipment operating in a contaminated environment is monitored and, if necessary, decontaminated before maintenance. The specifications must convey that the equipment design accounts for these processes. [ALARA]

Verification: Verification is expected to be achieved through the following:

Verif. Method	Verif. By	Plan	Notes/Comments
R	**ENG**	Review the DEP system design to verify equipment can withstand decontamination processes without reduction or degradation of equipment functionality.	

3.5.4.13 Radiation Detection

Requirement: Where there are radiation monitors to detect radiation breakthrough in non-contaminated systems that interface with the DEP system (e.g. steam and cooling water), there shall be the means to divert streams from the normally non-contaminated systems to alternate locations or to isolate the normally non-contaminated stream discharge. [Section 7.1, ORD]

Basis Discussion: Instrumentation systems are provided to detect breakthrough in cooling water, steam condensate, and liquid effluents. Conductivity measurements are provided in locations where it can be verified that a means of detection is appropriate and effective. Standard liquid effluent radiation monitors and cooling water monitors are designed and installed where radiation monitors are included in the design. These instrumentation systems, in conjunction with isolation valves, diversion valves, holdup tankage, and alarms (where required), serve to prevent significant radioactive discharges into streams that are expected to be non-active. In the event of a non-contaminated system becoming contaminated, this provides the ability to isolate and direct the streams from normally non-contaminated systems to other areas in the process. [ALARA]

Verification: Verification is expected to be achieved through the following:

Verif. Method	Verif. By	Plan	Notes/Comments
R	**ENG**	Review the design to verify all places where radiation monitoring of non-contaminated systems that interface with the DEP system (e.g. steam and cooling water) is provided, there is an alternate path for the normally non-contaminated stream or isolations for the normally non-contaminated stream discharge.	

3.5.4.14 Freeze Protection

Requirement: Electrical freeze protection shall be provided for DEP system liquid filled piping and instrument sensing lines subject to freezing and process lines which must be maintained at a specific operating temperature. [Section 8.7, BOD] [Section 16.5, ORD] (Table 2-2, G.2)

Basis Discussion: To prevent liquid filled piping and instrument sensing lines from freezing when exposed to low temperatures, a means of freeze protection is included in the design of the piping or controls systems.

Verification: Verification is expected to be achieved through the following:

Verif. Method	Verif. By	Plan	Notes/Comments
R	**ENG**	Review the design of the DEP system to verify that heat tracing is provided for liquid filled piping and instrument sensing lines subject to freezing.	This is done prior to installation.

3.5.4.15 Sectionalized Thermal Insulation

Requirement: When thermal insulation is required around DEP system valves and in-line instruments, it shall be sectionalized to allow easy removal and replacement. [Section 11.16, ORD]

Basis Discussion: Thermal insulation is used in piping system design for heat conservation, freeze protection, and personnel protection. For personnel protection purposes, insulation reduces the temperature of valve and in-line

component surfaces in accessible areas so that personnel are not harmed by physical contact. Equipment accessibility is a consideration of the general plant lay-out and valve and in-line instrument design.

Verification: Verification is expected to be achieved through the following:

Verif. Method	Verif. By	Plan	Notes/Comments
R	**ENG**	Review the design to verify insulation provided around valves and in-line instruments is sectionalized.	

3.5.4.16 Effluent Filtration Prior to Processing

Requirement: Liquid effluents, including LAW Facility and Lab RLD system effluent, miscellaneous effluents collected in the DEP system low-point drain vessel, and liquid collected in DEP system sumps, shall be filtered prior to processing through the DEP system. (Table 2-2, A.3)

Basis Discussion: Filtering to reduce the particle size present in the liquid effluent mitigates the erosive wear of large, hard particles on the process piping.

Verification: Verification is expected to be achieved through the following:

Verif. Method	Verif. By	Plan	Notes/Comments
R	**ENG**	Review the design to verify liquid effluents identified in the requirement statement are filtered prior to processing through the DEP system.	

3.5.4.17 Prevention of Steam Induced Water Hammer

Requirement: The DEP process system design shall include adequate provisions to preclude steam-induced water hammer. The ability to isolate part of the steam header shall be provided. Isolation of steam headers shall include the provision to double block and bleed the system. There shall be an adequate number of condensate drains at the low points to assure complete condensate drainage before reintroduction of steam. For steam systems 3 inches and larger, where pipe length and configuration create the potential for steam induced water hammer, there shall be bypass warm-up lines. There shall be high point vents to avoid vacuum formation and incomplete draining during steam system shutdown. [Section 7.1, ORD]

Basis Discussion: The DEP system design should include protection from fluid-induced water hammer, covered in requirement 3.5.4.10 of this document, as well as steam-induced water hammer.

Verification: Verification is expected to be achieved through the following:

Verif. Method	Verif. By	Plan	Notes/Comments
R	**ENG**	Review the design to verify provisions are included in the design for the prevention of steam-induced “water hammer”.	
R	**ENG**	Review the design to verify double block and bleed isolations, condensate drains, bypass/warm-up lines, and high point vents are provided as needed to prevent steam induced “water hammer”.	

3.5.4.18 Temperature Element Installation

Requirement: DEP system temperature elements shall be installed in thermowells to allow for removal without interrupting the process. [Section 11.16, ORD]

Basis Discussion: Installing temperature elements in thermowells reduces maintenance time and worker exposure to process fluids. [ALARA]

Verification: Verification is expected to be achieved through the following:

Verif. Method	Verif. By	Plan	Notes/Comments
R	ENG	Review the DEP system design to verify temperature elements are installed in thermowells.	

3.5.4.19 Flush Mounted Instrumentation

Requirement: DEP system instrumentation installed in piping with solids shall be flush-mounted. [Section 11.16, ORD]

Basis Discussion: Flush mounting prevents solids from plugging and the instrumentation from providing erroneous indications as it does not create an obstruction of flow where solids could accumulate. For example, transducers installed in a short pipe stub would fill with solids. [ALARA]

Verification: Verification is expected to be achieved through the following:

Verif. Method	Verif. By	Plan	Notes/Comments
R	ENG	Review the design to verify instrumentation installed in DEP system process piping is flush mounted.	

3.5.4.20 Steam Valve Racks

Requirement: Steam valve racks shall be provided at the interface where steam is introduced into the DEP system. Appropriate additional protection shall be provided to prevent contamination created by vacuum when the steam is turned off. [Section 14.4, ORD] [Section 11.6.6, BOD]

Basis Discussion: Inclusion of steam valve racks at the interface point allows for isolation of the utility system steam piping from the process system steam piping. [ALARA]

Verification: Verification is expected to be achieved through the following:

Verif. Method	Verif. By	Plan	Notes/Comments
R	ENG	Review the design to verify steam valve racks are provided at the interface with the utility steam system and that protections are in place to prevent contamination created by vacuum when the steam supply is turned off.	

3.5.4.21 Steam Line Lagging

Requirement: Steam line lagging shall not cover DEP system valves and other equipment such as to prevent its use and identification, and not introduce hazards when removing or replacing the lagging, (sharp edges, etc.). Lagging blankets shall be installed if access is required regularly. [Section 7.1, ORD]

Basis Discussion: The ability to access and identify valves and other equipment contained in steam system piping is a consideration for the design of lagging and incorporation of lagging blankets in the design. Design for accessibility and maintainability supports continued operation of the steam and process systems.

Verification: Verification is expected to be achieved through the following:

Verif. Method	Verif. By	Plan	Notes/Comments
R	**ENG**	Review the design of the steam system piping to verify any provided lagging does not impact the continued use and identification of in-line components and instruments.	
R	**ENG**	Review the design of the steam system piping to verify blankets are provided in locations where regular access to steam system piping is required.	

3.5.4.22 Permanently Lubricated Components

Requirement: Permanently lubricated, sealed for life components shall be used wherever possible in the DEP system in order to reduce maintenance requirements. [Section 9.1, ORD]

Basis Discussion: The use of permanently lubricated, sealed for life components wherever possible ensures that the need for maintenance is minimized, which supports maintaining facility worker exposure levels ALARA. [ALARA]

Verification: Verification is expected to be achieved through the following:

Verif. Method	Verif. By	Plan	Notes/Comments
R	**ENG**	Review the design to verify permanently lubricated, sealed for life components are used in the DEP system design wherever practical.	

3.5.4.23 Power and Instrumentation Connections

Requirement: Plugs and electrical connectors shall be used for DEP system power and instrumentation connections instead of hard wiring, where practical. [Section 9.1, ORD]

Basis Discussion: The use of plugs and electrical connectors minimizes the time and type of crafts required to perform maintenance work.

Verification: Verification is expected to be achieved through the following:

Verif. Method	Verif. By	Plan	Notes/Comments
R	**ENG**	Review the design to verify plugs and electrical connectors are used for power and instrumentation connections, where practical.	

3.5.4.24 Pressure Relief Valve Configuration

Requirement: Where portions of the DEP system cannot be easily isolated or when system draining and isolation would have a negative impact on safety or productivity, pressure relief valves shall be configured using a full port three-way valve, dual PSVs, and drain valves on each leg. The three-way valve shall be designed such that there is no position where the internal plug, disc, or ball would isolate or block both PSVs simultaneously. The three-way valve shall also be capable of being locked in a position that only allows one port to be fully open and the other port fully closed. [Section 14.4, ORD]

Basis Discussion: The use of a three-way valve and dual PSVs precludes a system service outage when servicing any relief valve. This configuration requirement is not also extended to the DVP system because a redundant exhauster train is provided.

Verification: Verification is expected to be achieved through the following:

Verif. Method	Verif. By	Plan	Notes/Comments
R	**ENG**	Review portions of the DEP system where pressure relief valves are used and the system cannot easily be isolated or where the isolation would have a negative impact on safety or productivity to verify the required valve configuration is utilized.	
R	**ENG**	Review the design of the three-way valves to verify there is no position where the internal plug, disc, or ball would isolate or block both PSVs simultaneously and that the valve can be locked.	

3.6 DEP System Equipment Requirements

3.6.1 Vessel Requirements

3.6.1.1 Mission and Functional/Performance Requirements (Including States/Modes)

3.6.1.1.1 DEP System Storage Capacity

Requirement: The DEP system vessels shall be sized to allow for a minimum of 48 hours of effluent storage capacity and for a maximum capacity in accordance with Table III.10.E.R in the DWP. [Section 6.3.6, BOD] [Section 1.2, ICD-06] [Sections 1.2, 2.3, ICD-31] [Section III.10.E.1.b, Table III.10.E.R, DWP] (Table 2-2, A.7.1) (Table 2-2, A.7.2)

Basis Discussion: The DEP system should provide adequate storage capacity for the receipt of effluents and the evaporator condensate and concentrate prior to their transfer out of the system.

Verification: Verification is expected to be achieved through the following:

Verif. Method	Verif. By	Plan	Notes/Comments
A	**ENG**	Perform an analysis to verify DEP system is sized to accommodate the required 48 hours of storage capacity.	
R	**ENG**	Review the design to verify the DEP system vessels are sized in accordance with the preceding analysis and Table III.10.E.R of the DWP.	

3.6.1.1.2 Storing Concentrated and Dilute Effluent

Requirement: The DEP system shall store the dilute and concentrated effluent from the evaporator separately. [Sections 6.1.4, 6.3.6, BOD] (Table 2-2, A.5.1) (Table 2-2, A.5.2)

Basis Discussion: The dilute and concentrated effluent are stored separately to allow for transfer to different facilities/systems with different waste criteria.

Verification: Verification is expected to be achieved through the following:

Verif. Method	Verif. By	Plan	Notes/Comments
R	**ENG**	Review the design to verify the dilute and concentrated effluent are accumulated and stored separately.	

3.6.1.2 Nuclear Safety, ALARA, Environmental, and Other Regulatory Requirements

3.6.1.2.1 Vessel Overflow

Requirement: The DEP system process vessels that operate at or below atmospheric pressure shall have overflow feature(s) that are instantaneously and continuously available to accommodate abnormal operating conditions (e.g., loss of negative pressure or vessel contents exceeding the high level limit of the vessel) to prevent liquid flow through the DVP vessel vent system. Overflow features in DEP system process vessels shall be designed to handle the maximum inflow to the vessel without the liquid level in the overflowing tank reaching an unacceptably high level. No valves or other restrictions shall be included in the DEP system process vessel overflow lines. Overflow lines shall also be designed to prevent the buildup of material that could cause blockages. Overflowed process stream shall be returned to the waste treatment process, and the compatibility of the overflowing liquid and recipient vessel shall be confirmed. Overflowing direct to the cell floor shall only be considered as the last overflow in a cascaded system. [Section 6.7.5, BOD] [Section 4.2.8, DWP] (Table 2-2, C.1) (Table 2-2, C.2)

Basis Discussion: Normal process operating controls and trips are used for prevention of vessel overfill. In the event these controls fail to stop overfilling (i.e., abnormal operation conditions), the engineered overflows prevent liquid from entering the vessel ventilation system. Overflow systems meet the requirements of WAC 173-303, *Dangerous Wastes Regulations*. The overflow features on the DEP vessels minimizes the potential of effluents from the DEP vessels backflow to low contamination or radiation areas, which limits dose exposure of personnel. [ALARA]

Verification: Verification is expected to be achieved through the following:

Verif. Method	Verif. By	Plan	Notes/Comments
A	**ENG**	Perform an analysis to determine the required overflow size to handle the maximum inflow to the vessel without the liquid level in the overflowing tank reaching an unacceptably high level	
R	**ENG**	Review the design to verify each DEP system process vessel operating at or below atmospheric pressure is provided with an overflow feature that is instantaneously and continuously available for use to accommodate abnormal operating conditions.	
R	**ENG**	Review the design to verify overflow features in DEP system process vessels are designed to (1) handle the maximum inflow to the vessel without the liquid level in the overflowing tank reaching an unacceptably high level in accordance with the analysis, (2) contain no valves or other restrictions, and (3) prevent the buildup of material that could cause blockages.	
R	**ENG**	Review the design to verify return of overflowed process stream to the waste treatment process (DEP system) and compatibility of overflowing liquid with the recipient vessel.	
R	**ENG**	Review the design to verify that any overflow directly to a cell floor is the last overflow in a cascaded system.	

3.6.1.2.2 Overflow to Cell Design

Requirement: Where an overflow is from a DEP system vessel to the cell, the overflow system shall maintain segregation of the cell and vessel ventilation systems. Overflow lines shall be provided with a mechanism to prevent venting to personnel areas. The design shall include features necessary for monitoring and maintaining the vent seal, where a vent seal is used. Cells that receive process vessel overflows shall be designed as secondary containment areas. [Section 7.1, ORD] [Section 6.7.5, BOD] [Section 4.2.8, DWP]

Basis Discussion: DEP system vessels are connected to the vessel ventilation systems for the removal of hazardous gases from the vessel headspace. Under abnormal operating conditions, the potential exists for the low point drain vessel to overflow through a loop seal and discharge process effluents to the cell floor. In this unlikely event, process effluents would be exposed to the room environment and vented by the building ventilation system. [ALARA]

Verification: Verification is expected to be achieved through the following:

Verif. Method	Verif. By	Plan	Notes/Comments
R	**ENG**	Review the design to verify the overflow features of vessels that overflow to cells are in conformance with the requirement.	
R	**ENG**	Review the design to verify that cells that receive process vessel overflows are designed as secondary containment areas.	

3.6.1.3 System Interface Requirements

None.

3.6.1.4 Other Technical, Specialty, Operations, and Maintenance Requirements

3.6.1.4.1 Internal Spray Wash Mechanism

Requirement: The DEP system process vessels shall be equipped with an internal spray mechanism to facilitate adequate internal vessel washing for contamination removal. [Section 11.7.4, BOD] [Sections 14.2, 20, ORD] (Table 2-2, D.1)

Basis Discussion: The internal spray mechanisms used to wash the vessels help to facilitate the removal of contamination and prevent the buildup of solids on the inner walls of the vessels. [ALARA]

Verification: Verification is expected to be achieved through the following:

Verif. Method	Verif. By	Plan	Notes/Comments
R	**ENG**	Review the DEP system process vessel designs to verify internal spray mechanisms are included.	

3.6.1.4.2 Vessel Entry

Requirement: The DEP system process vessels shall provide means of gaining personnel access to each vessel to facilitate vessel inspection, cleaning, and draining of contents. A man-way shall be a temporary cover that shall be fitted with a mechanism to securely lock the cover in place and shall provide a positive seal so as not to hinder the vessel ventilation commissioning program. Upon completion of commissioning and to comply with vessel and cell ventilation requirements, a permanent cover (and appropriate shielding) shall be fitted in place. If personnel access is not feasible, provisions shall be made to ensure that vessel cleanliness is certified at construction and maintained by controls until turnover to commissioning. [Section 19.10, ORD]

Basis Discussion: Inclusion of provisions to accommodate vessel entry in the design supports inspection and cleaning of the vessel. Most DEP process vessels include suction-off lines that support removal of the vessel contents for cleaning, inspection, and other operational purposes. Vessels without the bottom drain use alternative methods for liquid removal, including heel dilution and use of specialty pumps.

Verification: Verification is expected to be achieved through the following:

Verif. Method	Verif. By	Plan	Notes/Comments
R	**ENG**	Review the design to verify a means of gaining access to each process vessel is incorporated and that each DEP system process vessel can be drained.	

3.6.1.4.3 Corrosion Protection of Vessels

Requirement: The DEP system process vessels shall be protected from internal and external corrosion. [Section 11.1.1.1, BOD]

Basis Discussion: Vessels are provided with additional thickness, over and above that required for mechanical strength, used for mitigating the effects of corrosion.

Verification: Verification is expected to be achieved through the following:

Verif. Method	Verif. By	Plan	Notes/Comments
R	ENG	Review the design to verify DEP system process vessels are protected from internal and external corrosion.	

3.6.2 Evaporator Requirements

3.6.2.1 Mission and Functional/Performance Requirements (Including States/Modes)

3.6.2.1.1 Evaporator Accessibility for Maintenance

Requirement: The location and design of the DEP system evaporator shall support the ability to replace maintainable components to support the overall design life of the evaporator. [Section 11.3.2.4, BOD]

Basis Discussion: Equipment accessibility is a consideration of the general plant lay-out and evaporator system design. [ALARA]

Verification: Verification is expected to be achieved through the following:

Verif. Method	Verif. By	Plan	Notes/Comments
R	ENG	Review the design and location of the evaporator to verify the ability to replace components to support the overall design life of the evaporator.	

3.6.2.1.2 Evaporator Antifoam Addition

Requirement: The DEP system evaporator shall have provisions to add antifoam reagent as necessary. [Section 6.1.4, BOD] (Table 2-2, B.2)

Basis Discussion: Antifoam reagent is used to minimize generation of foam in the waste. Antifoam addition prevents carryover, which can cause overhead condensate to not meet decontamination factor requirements.

Verification: Verification is expected to be achieved through the following:

Verif. Method	Verif. By	Plan	Notes/Comments
R	ENG	Review the design to verify antifoam reagent addition provisions.	

3.6.2.1.3 Evaporator Bypass

Requirement: The DEP system shall be designed to allow the bypass of the evaporator system. [Section 6.1.2, BOD] (Table 2-2, B.3)

Basis Discussion: In the event that the DEP system evaporator is unavailable, the DEP system bypasses the evaporator and transfers the feed to Tank Farms.

Verification: Verification is expected to be achieved through the following:

Verif. Method	Verif. By	Plan	Notes/Comments
R	**ENG**	Review the design to verify the capability to bypass the DEP system evaporator.	

3.6.2.2 Nuclear Safety, ALARA, Environmental, and Other Regulatory Requirements

None.

3.6.2.3 System Interface Requirements

None.

3.6.2.4 Other Technical, Specialty, Operations and Maintenance Requirements

None.

3.6.3 Heat Exchanger Requirements

3.6.3.1 Mission and Functional/Performance Requirements (Including States/Modes)

3.6.3.1.1 Heat Exchanger Accessibility for Maintenance

Requirement: The DEP system heat exchangers and condensers shall be designed to permit access for in-situ maintenance, repair, or inspection, as necessary. [Sections 11.3.2.5, 11.7.4, BOD] [Section 14.1, ORD]

Basis Discussion: Equipment accessibility is a consideration of the general plant lay-out and heat exchanger/condenser system design, and provisions for accessibility ensure these components can be serviced as needed while installed. [ALARA]

Verification: Verification is expected to be achieved through the following:

Verif. Method	Verif. By	Plan	Notes/Comments
R	**ENG**	Review the design to verify heat exchangers and condensers are designed to permit access for in-situ maintenance, repair, or inspection.	

3.6.3.2 Nuclear Safety, ALARA, Environmental, and Other Regulatory Requirements

None.

3.6.3.3 System Interface Requirements

None.

3.6.3.4 Other Technical, Specialty, Operations and Maintenance Requirements

3.6.3.4.1 Secondary Cooling Water Loop

Requirement: The DEP system shall use a secondary cooling water loop to protect the BOF cooling water system from contamination. The closed loop system shall be monitored for radioactive contamination and be designed for decontamination. [Sections 7.1, 14.7, ORD] [Section 9.4.10, BOD]

Basis Discussion: Use of a secondary cooling water loop protects the uncontaminated cooling water system from becoming contaminated in the event of a leak or radiation breakthrough. Monitoring of the secondary loop for conductivity supports early identification of a leak or radiation breakthrough so that mitigating actions can be taken. [ALARA]

Verification: Verification is expected to be achieved through the following:

Verif. Method	Verif. By	Plan	Notes/Comments
R	**ENG**	Review the DEP system design to verify a secondary cooling water loop is used to protect the BOF cooling water system from contamination.	
R	**ENG**	Review the design to verify the secondary cooling water loop is monitored for radioactive contamination and is designed for decontamination.	

3.6.3.4.2 Secondary Steam Loop

Requirement: The DEP system shall use a secondary steam loop to protect the BOF steam system from contamination. The closed loop system shall be monitored for radioactive contamination and be designed for decontamination. [Section 7.1, ORD] [Sections 9.4.10, 11.6.6, BOD]

Basis Discussion: Use of a secondary steam loop protects the uncontaminated steam system from becoming contaminated in the event of a leak or radiation breakthrough. Monitoring of the secondary loop for conductivity supports early identification of a leak or radiation breakthrough so that mitigating actions can be taken. [ALARA]

Verification: Verification is expected to be achieved through the following:

Verif. Method	Verif. By	Plan	Notes/Comments
R	**ENG**	Review the DEP system design to verify a secondary steam loop is used to protect the BOF steam system from contamination.	
R	**ENG**	Review the design to verify the secondary steam loop is monitored for radioactive contamination and is designed for decontamination.	

3.6.4 Pump/Ejector Requirements

3.6.4.1 Mission and Functional/Performance Requirements (Including States/Modes)

3.6.4.1.1 Sump Pump Transfer Rate

Requirement: The minimum transfer rate for the DEP system sump pumps in DWP areas shall be based on the removal of spills, leaks, or accumulated liquid from the secondary containment system within 24 hours or in as timely a manner as possible, as required by the DWP. [Section 14.10.1.2, BOD] (Table 2-2, C.3.2)

Basis Discussion: The removal of spills or leaks occurs within 24 hours, or as timely as possible. Note: Ecology must be notified if the releases or accumulated liquid cannot be removed within 24 hours. (WAC 173-303-640[4][c][iv])

Verification: Verification is expected to be achieved through the following:

Verif. Method	Verif. By	Plan	Notes/Comments
A	**ENG**	Perform an analysis to verify sumps can be emptied per the DWP requirement.	
R	**ENG**	Review the design to verify conformance to the requirement.	
T	**SU/ COM**	Perform a test to verify DEP system sump pumps in DWP areas meet the minimum flow rates.	

3.6.4.1.2 Evaporator Concentrate/Feed Transfer to Tank Farms

Requirement: The DEP system shall provide the motive force for transferring evaporator concentrate/feed to the Tank Farm. If the effluent contains solids or the specific gravity is greater than 1.35 kg/L, the transfer system shall be capable of achieving a velocity greater than 4 ft/sec. [Sections 1.2, 2.7, ICD-31] (Table 2-2, A.8.1)

Basis Discussion: The transfer distance, volume of effluent, and velocities necessitate the use of mechanical motive force for delivery of effluent to Tank Farms. The transfer velocity is based on the critical velocity to prevent deposition of solids from the submerged bed scrubber effluent. If the effluent does not contain solids and the specific gravity is less than 1.35 kg/L, the transfer does not have a minimum velocity to satisfy requirements for waste transfers.

Verification: Verification is expected to be achieved through the following:

Verif. Method	Verif. By	Plan	Notes/Comments
A	**ENG**	Perform an analysis to determine the volumetric flow necessary to achieve a transfer velocity greater than 4ft/sec.	This analysis is only required if it is determined that the effluent will contain solids or the specific gravity will be greater than 1.35 kg/L.
R	**ENG**	Review the design to verify that the DEP system provides the motive force for the transfer of evaporator concentrate/feed from EMF to the Tank Farm.	
T	**SU/COM**	Perform a test to verify the ability to achieve the minimum volumetric flow determined by the analysis.	This test is only required if it is determined that the effluent will contain solids or the specific gravity will be greater than 1.35 kg/L.

3.6.4.1.3 Dilute Effluent Transfer to LERF/ETF

Requirement: The DEP system shall provide the motive force for transferring dilute effluents to LERF/ETF. The maximum instantaneous discharge rate of the transfer shall be limited by the design pressure of the downstream pipeline installed between the WTP interface point and LERF/ETF. [Sections 1.2, 2.1, 2.5, ICD-06] (Table 2-2, A.8.2)

Basis Discussion: The transfer distance, volume of dilute effluent, and velocities necessitate the use of mechanical motive force for delivery of dilute effluent to LERF/ETF.

Verification: Verification is expected to be achieved through the following:

Verif. Method	Verif. By	Plan	Notes/Comments
A	**ENG**	Perform an analysis to determine the maximum instantaneous discharge rate of the transfer that does not exceed the design pressure of the downstream pipeline.	
R	**ENG**	Review the design to verify conformance with the results of the analysis.	
R	**ENG**	Review the design to verify that the DEP system provides the motive force for the transfer of dilute effluent from EMF to LERF/ETF.	

3.6.4.1.4 Vacuum Ejector Maintenance and Replacement

Requirement: Provisions shall be made for the maintenance or replacement of DEP system vacuum ejectors if they are unable to sustain a 40-year life or spare units are not available. [Section 14.1, ORD]

Basis Discussion: Vacuum ejectors are subject to continuous duty and therefore can suffer from erosion and loss of efficiency. Spare units should be installed in the design to allow for continuous system availability.

Verification: Verification is expected to be achieved through the following:

Verif. Method	Verif. By	Plan	Notes/Comments
R	**ENG**	Review the design to verify that provisions for maintenance or replacement of vacuum ejectors are provided if the units are unable to sustain a 40-year life or spare units are not provided in the design.	

3.6.4.2 Nuclear Safety, ALARA, Environmental, and Other Regulatory Requirements

Refer to Section 3.6.4.1.1 for the DWP-related requirement for DEP system pumps.

3.6.4.3 System Interface Requirements

None.

3.6.4.4 Other Technical, Specialty, Operations and Maintenance Requirements

3.6.4.4.1 Pump Seals

Requirement: The DEP system pump seals or other pump design features, upon failure, shall not provide a pathway for liquids or gases to personnel or to the environment. [Section 14.1, ORD]

Basis Discussion: The spread of contaminants (liquids or gases) to personnel or to the environment is minimized by using pump seals or other design features. [ALARA]

Verification: Verification is expected to be achieved through the following:

Verif. Method	Verif. By	Plan	Notes/Comments
R	**ENG**	Review the design to verify the DEP system pumps are designed to preclude leakage of liquids/gases that could lead to exposure to the workers or the environment.	

3.6.4.4.2 Backflow Prevention in Steam Motivated Jet Systems

Requirement: There shall be provisions to prevent backflow of contamination for DEP system steam motivated jet systems. [Sections 14.1, 14.3, ORD]

Basis Discussion: The DEP system should ensure that the steam source for the steam ejector does not become contaminated with fluid from the DEP evaporator system. [ALARA]

Verification: Verification is expected to be achieved through the following:

Verif. Method	Verif. By	Plan	Notes/Comments
R	**ENG**	Review the design to verify the provisions for backflow prevention are included in DEP steam motivated jet systems.	

3.6.4.4.3 Motors

Requirement: The following requirements apply to DEP system pump motors:

- Motors shall be squirrel-caged induction type
- Motors in hazardous locations shall have enclosures constructed for the area in which they are installed
- Motors powered from adjustable speed drives shall be definite-purpose inverter fed polyphase type
- Motors 20-hp or larger located outdoors, unless specific operating conditions dictate otherwise, shall be equipped with space heaters. The power source for the space heaters shall be 120-V AC individually protected
- Premium efficiency motors shall be used, where practical

[Section 8.4.8, BOD] [Section 16.1, ORD]

Basis Discussion: Motors should be qualified to function in the environment in which they are installed. The selection of enclosures considers the specific conditions of the installation location.

Verification: Verification is expected to be achieved through the following:

Verif. Method	Verif. By	Plan	Notes/Comments
R	**ENG**	Review the design of DEP system motors to verify adherence to the criteria listed in the requirement.	

3.6.5 General Piping Requirements

This section contains general requirements for the design of DEP piping systems. Requirements for the design of underground waste transfer lines are contained in Section 3.14.

3.6.5.1 Mission and Functional/Performance Requirements (Including States/Modes)

None.

3.6.5.2 Nuclear Safety, ALARA, Environmental, and Other Regulatory Requirements

3.6.5.2.1 Mechanical Isolation of Utility Supply Lines

Requirement: The utility supply lines (e.g. steam and water) within the scope of the DEP system shall include suitable isolation provisions to prevent reverse flow at tie-in points that can potentially result in contaminating the utility supply lines as well as include provisions to preclude unplanned syphoning of piping. [Section 7.1, ORD]

Basis Discussion: This mechanical isolation design feature (e.g., valves, blind flanges, check valves, siphon breaks, spectacle blinds, or capped lines) ensures there is no connection between utility supply lines susceptible to backflow of contamination. [ALARA]

Verification: Verification is expected to be achieved through the following:

Verif. Method	Verif. By	Plan	Notes/Comments
R	**ENG**	Review the piping design to verify back-flow and siphoning prevention features are included.	

3.6.5.3 System Interface Requirements

None.

3.6.5.4 Other Technical, Specialty, Operations and Maintenance Requirements

3.6.5.4.1 Pipe Draining and Slopes

Requirement: The aboveground DEP system process piping shall have provisions to drain the piping and shall have no traps or pockets that can accumulate liquids or solids that cannot be drained either by operator action or through free draining design. [Sections 7.1, 14.3, 20.0, ORD] [Section 11.3.1, BOD]

Basis Discussion: For additional details on pipe sloping, refer to 24590-WTP-GPG-M-027, *Recommended Slopes for Piping System*. Level piping for a short distance through wall penetrations, at connections to equipment, and at jumpers is acceptable (Section 14.3, ORD). This is an ALARA feature because it ensures the pipes are drained of radioactive material if maintenance needs to be performed, and during decommissioning, which reduces dose and the potential to spread contamination. [ALARA]

Verification: Verification is expected to be achieved through the following:

Verif. Method	Verif. By	Plan	Notes/Comments
R	**ENG**	Review the DEP system aboveground piping design to verify that the piping is designed to drain.	

3.6.5.4.2 Flush Piping

Requirement: The aboveground DEP system process piping shall have the capability to be flushed. [Section 6.2.1, BOD] [Sections 14.1, 14.3, 20.0, ORD] (Table 2-2, D.1)

Basis Discussion: Flushing capability is provided for piping systems to limit accumulation of solids and reduce contamination in process piping. [ALARA]

Verification: Verification is expected to be achieved through the following:

Verif. Method	Verif. By	Plan	Notes/Comments
R	**ENG**	Review the DEP system aboveground piping design to verify that the flushing capability is incorporated in the design.	

3.6.5.4.3 Piping Design for Gravity Liquid Draining

Requirement: The aboveground DEP system process piping shall include the capability to break a vacuum in a transfer line as required to allow gravity liquid draining. [Section 7.1, ORD]

Basis Discussion: The addition of a vacuum breaker, high point vent, or other design feature that provides the capability to break a vacuum within a transfer line ensures that air can be admitted and swept in the pipe, thereby restoring normal flow. This is an ALARA feature because it allows lines to completely drain. [ALARA]

Verification: Verification is expected to be achieved through the following:

Verif. Method	Verif. By	Plan	Notes/Comments
R	**ENG**	Review the aboveground DEP system piping design to verify a means of breaking vacuum is provided.	

3.6.5.4.4 Piping Exiting Cells

Requirement: A coaxial pipeline system or the provision of a stainless steel liner shall be used as secondary containment where DEP system process pipes exit cells. The secondary containment shall be provided with drains and a leak detection system. [Sections 11.3.5.2, 14.10.1.3, BOD] (Table 2-2, C.3.1)

Basis Discussion: Although requirements for underground waste transfer lines are covered in section 3.14 of this document, the design should also account for process pipelines that exit cells but are located aboveground, such as the process piping in the chase between the LAW effluent process building and the LAW effluent drain tank building. [ALARA]

Verification: Verification is expected to be achieved through the following:

Verif. Method	Verif. By	Plan	Notes/Comments
R	**ENG**	Review the design to verify that secondary containment is provided for DEP system aboveground pipelines that exit cells.	
R	**ENG**	Review the design to verify that the secondary containment feature is provided with drains and a leak detection system.	

3.6.5.4.5 Filtering Effluent to LERF/ETF

Requirement: A 5 micron filter, maintainable at the EMF and installed in the effluent line to the LERF/ETF upstream of the split into primary and backup transfer lines, shall be provided for transfers from the DEP system to LERF/ETF. [Section 2.1.4, ICD-06]

Basis Discussion: A single 5-micron filter is installed in the DEP system effluent line to the LERF/ETF upstream of the split into primary and backup transfer lines consistent with CCN 275986, *Liquid Waste Processing Facilities Waste Acceptance Criteria, HNF-3172* (CHPRC 2012).

Verification: Verification is expected to be achieved through the following:

Verif. Method	Verif. By	Plan	Notes/Comments
R	**ENG**	Review the design to verify the inclusion of a 5 micron filter upstream of the split into primary and backup transfer lines.	

3.6.5.4.6 Provisions for Decontamination Chemical Addition

Requirement: The DEP system shall be furnished with the capability to add decontamination chemicals to the appropriate process vessels. [Section 14.1, ORD]

Basis Discussion: Incorporation of design features that support decontamination and decommissioning of the system is a consideration for DEP system design. Designing the piping and valving systems to allow for decontamination chemical additions support decontamination and decommissioning objectives. [ALARA]

Verification: Verification is expected to be achieved through the following:

Verif. Method	Verif. By	Plan	Notes/Comments
R	**ENG**	Review the DEP system design to verify the provisions to add decontamination chemicals to the appropriate process vessels.	

3.6.6 Mixer/Agitator Requirements

3.6.6.1 Mission and Functional/Performance Requirements (Including States/Modes)

3.6.6.1.1 General Agitation/Mixing

Requirement: The DEP system process vessels handling radioactive waste shall be capable of mixing vessel contents. [Sections 6.1, 6.7.3, BOD] [Section 14.14, ORD] (Table 2-2, A.6.1) (Table 2-2, A.6.2)

Basis Discussion: Agitation or mixing of the wastes helps prevent buildup of settled solids. Agitation or mixing of the DEP vessels is also required to collect a representative sample of vessel contents and to blend cold chemicals with active process liquids.

Verification: Verification is expected to be achieved through the following:

Verif. Method	Verif. By	Plan	Notes/Comments
A	**ENG**	Perform an analysis to verify that mixer/agitator sizing supports resuspension of settled solids.	
R	**ENG**	Review the design to the DEP system process vessels handling radioactive waste to verify the mixing/agitation capability is incorporated.	

3.6.6.2 Nuclear Safety, ALARA, Environmental, and Other Regulatory Requirements

None.

3.6.6.3 System Interface Requirements

None.

3.6.6.4 Other Technical, Specialty, Operations and Maintenance Requirements

None.

3.7 DEP System Monitoring and Control Requirements

This section contains general requirements for the monitoring and control of DEP system SSCs. Requirements associated with the monitoring and control of waste transfers (i.e., the transfer of waste feed from the TOC and EMF to the LAW Facility, the return of DEP system concentrated effluent to Tank Farms, and the transfer of dilute effluent to LERF/ETF) through underground waste transfer lines within the DEP system scope are contained in Section 3.15.

3.7.1 Mission and Functional/Performance Requirements (Including States/Modes)

3.7.1.1 Sump Liquid Level Monitoring

Requirement: All sumps used for secondary containment of DEP system process effluents shall include a continuous liquid level sensing capability for detection of leaks and shall be remotely monitored for liquid in the sumps. [Section 14.10.1.2, BOD] (Table 2-2, C.3.1) (Table 2-2, E.2)

Basis Discussion: Additional details on the various types of level sensing equipment used for leak detection within WTP sumps is found in 24590-BOF-PER-J-16-001, *System Logic Description for the Direct Feed LAW Effluent Management Facility Process System (DEP).*

Verification: Verification is expected to be achieved through the following:

Verif. Method	Verif. By	Plan	Notes/Comments
R	**ENG**	Review the design to (a) verify the inclusion of a liquid level sensing capability for leak detection and (b) verify the capability to remotely monitor the sumps for liquid accumulation from the PCJ.	

3.7.1.2 DEP Vessel Monitoring and Controls

3.7.1.2.1 Process Vessel Monitoring

Requirement: The DEP system process vessels shall include temperature and continuous level sensing capabilities and shall be remotely monitored for temperature and effluent level within the vessels. [Section 14.10.1.1, BOD] (Table 2-2, E.2)

Basis Discussion: Temperature monitoring provides the capability to ensure the effluents within the vessels are maintained within the system specified operating range. Effluent level is monitored to prevent overflows and to provide data on the effluent level in the vessels before the effluents are transferred.

Verification: Verification is expected to be achieved through the following:

Verif. Method	Verif. By	Plan	Notes/Comments
R	**ENG**	Review the design to (a) verify the inclusion of temperature and level sensing capabilities and (b) verify the capability to remotely monitor the vessels for temperature and level from the PCJ.	

3.7.1.3 DEP Evaporator Monitoring and Controls

3.7.1.3.1 Process Evaporator Monitoring

Requirement: The DEP system evaporator shall include pressure and level sensing capabilities and shall be remotely monitored for pressure and concentrate level within the evaporator. [Section 14.10.1.1, BOD] (Table 2-2, E.2)

Basis Discussion: Pressure monitoring provides the capability to ensure the effluent within the evaporator is maintained within the system specified operating range. Concentrate level is monitored to prevent liquid reaching the bubble-cap trays and demister pads and to provide data on the effluent level in the vessels before the effluents are transferred.

Verification: Verification is expected to be achieved through the following:

Verif. Method	Verif. By	Plan	Notes/Comments
R	**ENG**	Review the design to (a) verify the inclusion of pressure and level sensing capabilities and (b) verify the capability to remotely monitor the pressure and level within the DEP evaporator from the PCJ.	

3.7.2 Nuclear Safety, ALARA, Environmental, and Other Regulatory Requirements

None.

3.7.3 System Interface Requirements

None.

3.7.3.1 Process Control System - Instruments

Requirement: DEP system instruments connected to the PCJ system shall not perform any credited active safety function. Instruments connected to the PCJ may include and perform safety boundary or retention functions. The DEP system shall use standard, commercially available instrumentation and communication protocols to interconnect to the PCJ system. Fieldbus or Profibus communication shall be used to the extent practicable. [Sections 9.4.1, 9.5.3.1, 9.5.3.4, 9.6.5, BOD]

Basis Discussion: The PCJ is used as the normal process control system. The PCJ allows remote operator control and monitoring of the DEP process (e.g., provision for process level, temperature, pressure, along with the ability to control and monitor pumps, motors, and valves to operate the DEP system). Alarms and warnings are provided to bring operator attention to and allow rectification of abnormal process situations.

Verification: Verification is expected to be achieved through the following:

Verif. Method	Verif. By	Plan	Notes/Comments
R	**ENG**	Review the design to verify required specifications (related to PCJ interface) are included in material requisitions (MR), used to procure instruments.	

Verif. Method	Verif. By	Plan	Notes/Comments
R	**ENG**	Review the design and vendor documents to verify the DEP system uses standard, commercially available process control instrumentation and communication protocols.	
R	**ENG**	Review the design and vendor documents to verify Foundation Fieldbus or Profibus DP Fieldbus communications are used to the extent practicable.	

3.7.4 Other Technical, Specialty, Operations, and Maintenance Requirements

3.7.4.1 Accessibility for Calibration, Testing, and Inspection

Requirement: The DEP system shall provide the capability to access and perform replacement, removal, calibration, maintenance, troubleshooting, repairs, periodic functional testing, and inspections of monitoring components during normal operation. [Sections 6.7, 8.1.2, 9.12, BOD] [Sections 9.1, 11.16, ORD]

Basis Discussion: Clearances are provided in the design for easy access to monitoring and controls equipment requiring calibration, maintenance, testing, inspection, or replacement. Adequate clearances around equipment accommodate maintenance and operation personnel and any encumbrances such as protective garments, respirators, portable lifting devices, and alignment equipment for pumps, etc. This requirement provides Operations with a verification of actual field configuration to ensure no other accessibility issues remain.

Verification: Verification is expected to be achieved through the following:

Verif. Method	Verif. By	Plan	Notes/Comments
R	**ENG**	Review the design to verify the ability to perform the replacement, removal, calibration, maintenance, troubleshooting, repairs, periodic functional testing, and inspection of monitoring components during normal operation.	

3.7.4.2 Instrument Location

Requirement: The DEP system instrumentation shall be located outside of R5/C5 areas when possible. Whenever possible, instruments and detectors for the C3 process areas that require maintenance shall be located outside the C3 contaminated areas. However, transducer panels housing liquid level systems and associated input/output, and pressure transducers, shall be located in the C3 classified area as a precaution against back-contamination. In-plant controls shall be easily accessible (radiological zone) and shall not require double staffing (for example, locate control equipment close to readouts that monitor change of state). [Sections 9.1, 11.16, ORD]

Basis Discussion: Locating instruments and instrumentation panels outside of C5/R5 areas reduces the plant personnel exposure. Whenever possible, instruments and detectors that require maintenance are located outside the C3 contamination areas. [ALARA]

Verification: Verification is expected to be achieved through the following:

Verif. Method	Verif. By	Plan	Notes/Comments
R	**ENG**	Review the design to verify instruments for the DEP system are located outside of R5/C5 areas when possible.	

3.7.4.3 Flow Meter Bypass

Requirement: Where flow interruption is not acceptable, DEP system flowmeters shall be provided with bypass piping. [Section 11.16, ORD]

Basis Discussion: This requirement enables the flow element to be isolated and repaired/replaced online with the system in service while providing flow to users requiring uninterrupted flow.

Verification: Verification is expected to be achieved through the following:

Verif. Method	Verif. By	Plan	Notes/Comments
R	**ENG**	Review the DEP system design to verify flow meters are provided with by piping for those lines requiring uninterrupted flow.	

3.7.4.4 Warning and Alarm Systems

Requirement: DEP system warnings and alarms shall be designed to ensure that they can be heard at the local noise levels of the area they are intended to cover. Indicators shall be positioned to give a clear line-of-sight and safe accessibility. Flashing lights shall be used in high noise areas. [Section 11.16, ORD]

Basis Discussion: Alarms and warnings are provided to bring operator attention to—and allow rectification of—abnormal process situations. Rooms with equipment that require PPE for entry are considered "high noise areas" for compliance with ORD Section 12.5, Communications.

Verification: Verification is expected to be achieved through the following:

Verif. Method	Verif. By	Plan	Notes/Comments
R	**ENG**	Review the design to verify warnings and alarms are audible at local noise levels and flashing lights are provided in high noise areas.	
R	**ENG**	Review the design to verify indicators are positioned to give clear line-of-sight and safe accessibility.	

3.7.4.5 Pump Monitoring

Requirement: If required, the run time of selected higher horsepower DEP system motors shall be monitored. [Section 7.1, ORD]

Basis Discussion: The PCJ must be programmed to monitor the run time of any high horsepower motors contained in the DEP system. This supports efficient scheduling of run-hour based preventative maintenance.

Verification: Verification is expected to be achieved through the following:

Verif. Method	Verif. By	Plan	Notes/Comments
R	**ENG**	Review the design to verify that applicable high horsepower motors are identified in the DEP system design and run hours of specified high horsepower motors can be monitored.	

3.8 General HVAC Requirements

Note: If system designators are not explicitly stated in the requirement text, these general HVAC requirements are applicable to the ACV, C1V, and DVP systems.

3.8.1 Mission and Functional/Performance Requirements (Including States/Modes)

3.8.1.1 Confine Hazardous Materials

3.8.1.1.1 Cascade Principle

Requirement: The ACV system design shall be based on the cascade principle (airflow from areas of lower potential for contamination to areas of higher potential for contamination). [Sections 12.3.1.3, 12.15.1.1, BOD] [Section 15.1, ORD] (Table 2-4, C.1)

Basis Discussion: Confinement provided by EMF physical barriers (i.e., walls, doors, roofs, etc.) is enhanced by the EMF ventilation system that uses the cascading ventilation philosophy (i.e., the ACV system), which creates pressure gradients in process and utility areas and causes air to flow through the penetrations in physical barriers from an area of lower contamination potential to an area of higher contamination potential. This is achieved by maintaining areas with greater contamination potential at the greatest negative pressure with respect to all other areas. The resultant effect is that ventilation air cascades from areas of lesser contamination potential to areas of greater contamination potential. [ALARA]

Verification: Verification is expected to be achieved through the following:

Verif. Method	Verif. By	Plan	Notes/Comments
R	**ENG**	Review the design to verify that the direction of ventilation air is designed to flow from areas of low or no potential for contamination to areas of higher potential for contamination.	
T	**SU/ COM**	Perform differential pressure measurements to verify the airflow direction at contamination zone boundaries.	Testing to be performed as part of overall EMF HVAC system test

3.8.1.1.2 Balancing Dampers/Valves

Requirement: The ACV and DVP systems shall have balancing dampers/valves in the ventilation ductwork/piping that are manually operable with local indication of position and shall have provisions to be locked and (or) secured in position following balancing. The damper/valve position shall be permanently marked on the balancing damper/valve. [Section 12.7.3.4, BOD] [Section 15.1, ORD]

Basis Discussion: Balancing dampers/valves are provided in the ventilation ductwork/piping to facilitate system balancing during commissioning. The dampers/valves are manually operated with local indication of status only and are locked and (or) secured in the commissioned position. The damper/valve position is permanently marked on the balancing damper/valve upon completion of overall system balancing. [ALARA]

Verification: Verification is expected to be achieved through the following:

Verif. Method	Verif. By	Plan	Notes/Comments
R	**ENG**	Review the design to verify that dampers/valves are specified with local indication of position and have provisions to be locked and/or secured in position following balancing.	
I	**SU/ COM**	Inspect the ACV and DVP system balancing dampers/valves to verify the damper/valve position has been permanently marked to indicate position.	

3.8.1.1.3 Seismic Design

Requirement: The EMF ventilation system equipment and components shall be designed as non-safety, Seismic Category IV (SC-IV)/Performance Category 1 (PC-1). [Section H.53(c)(1), WTP Contract]

Basis Discussion: The designation of the EMF as SC-IV is a critical design input in the WTP Contract that supports completing the DFLAW configuration within cost and schedule targets.

Verification: Verification is expected to be achieved through the following:

Verif. Method	Verif. By	Plan	Notes/Comments
R	**ENG**	Review the design to verify all EMF ventilation system equipment and components meet the non-safety, SC-IV/PC-1 requirements.	

3.8.1.2 Remove Particulates

3.8.1.2.1 HEPA Filter Challenge Testing Configuration

Requirement: The ACV and DVP system ductwork/piping, dampers/valves, filters, aerosol sample equipment and injection ports shall be designed and arranged to support HEPA filter aerosol challenge testing. [Section 12.9, BOD]

Basis Discussion: HEPA filters are tested in-place after installation and at least annually thereafter. The test is performed in accordance with Section TA of ASME AG-1-1997 and demonstrates that the removal efficiency is no less than 99.95% for each stage of filtration. [ALARA]

Verification: Verification is expected to be achieved through the following:

Verif. Method	Verif. By	Plan	Notes/Comments
R	**ENG**	Review the design to verify ACV and DVP system components, aerosol sampling equipment and injection ports are designed and arranged to support HEPA filter air-aerosol mix concentration testing.	

3.8.1.3 Exhaust Air

3.8.1.3.1 Exhaust Fan Inlet Isolation Dampers/Valves

Requirement: The ACV and DVP systems shall have exhaust fan inlet isolation dampers/valves that are manually operated, normally open, and include remote indication of closed status in the LAW FCR. [Section 15.1, ORD] [Section 12.7.3.1, BOD]

Basis Discussion: Exhaust fan inlet isolation dampers/valves ensure exhaust air flow is routed to the operating exhaust fan and not the standby unit. Exhaust fans are interlocked with their respective inlet isolation dampers/valves so that the fan cannot start unless the damper/valve has been opened and the fan trips when the damper/valve has been closed. The exhaust fan inlet isolation dampers/valves are normally open.

Verification: Verification is expected to be achieved through the following:

Verif. Method	Verif. By	Plan	Notes/Comments
R	**ENG**	Review the design to verify the exhaust fans inlet dampers/valves are manually operated, normally open, and include remote indication at the PCJ of closed status.	

3.8.1.3.2 Supply and/or Exhaust Fan Outlet Isolation Dampers/Valves

Requirement: The ACV and DVP systems shall have supply and/or exhaust fan outlet isolation dampers/valves with remote status indication in the LAW FCR that are automatically operated via pneumatic actuators by the control system. [Section 15.1, ORD] [Section 12.7.3.1, BOD]

Basis Discussion: Exhaust fans are interlocked with their respective outlet isolation dampers/valves so that when the fan starts, the damper/valve automatically opens. The outlet isolation dampers/valves fail open but automatically close when the exhaust fan stops. For building ventilation systems, in the event that smoke is detected in the air handling unit (AHU) supply fan duct, the AHU supply fan is shut down. Once the AHU supply fan is shut down, the building exhaust fan is shut down and the AHU supply fan outlet isolation damper is closed to mitigate the spread of smoke to the facility.

Verification: Verification is expected to be achieved through the following:

Verif. Method	Verif. By	Plan	Notes/Comments
R	**ENG**	Review the design to verify supply and exhaust fan discharge dampers/valves are automatically operated and include remote indication of status at the PCJ.	

3.8.1.3.3 Environmental Conditions for EMF HVAC Non-Safety SSCs

Requirement: The EMF ventilation system equipment and components tagged non-safety shall be designed to operate within the conditions identified in Table 12-1 of the BOD if they are located indoors and within the conditions identified in Table 4-7 of the BOD if they are located outdoors. [Section 4.12, Table 4-7, Table 12-1, BOD] [Section 16.1, ORD]

Basis Discussion: Non-safety SSCs are designed to function as intended in the environmental conditions associated with their location.

Verification: Verification is expected to be achieved through the following:

Verif. Method	Verif. By	Plan	Notes/Comments
R	**ENG**	Review the design of indoor EMF HVAC non-safety SSCs to verify compliance with BOD Table 12-1 conditions.	
R	**ENG**	Review the design of outdoor EMF HVAC non-safety SSCs to verify compliance with BOD Table 4-7 conditions.	

3.8.2 Nuclear Safety, ALARA, Environmental and Other Regulatory Requirements

3.8.2.1 DELETED.

3.8.2.2 Environmental

3.8.2.2.1 Hanford Site Ambient Conditions

Requirement: The following Hanford Site ambient conditions shall be used to ensure EMF ventilation systems are operable during normal operations and design basis events:

- Summer: 101 °F dry bulb, 67 °F wet bulb, and 30 °F mean daily range
- Winter: 5 °F dry bulb

[Section 12.4.1.1, BOD]

Basis Discussion: The summer external dry-bulb temperature indicated above has been equaled or exceeded by 1% of the total hours during June through September. The coincident wet-bulb temperature indicated above is the mean of all wet-bulb temperatures occurring at the specific dry-bulb temperature. The winter external temperature has been equaled or exceeded by 99.6% of the total hours in a year.

Verification: Verification is expected to be achieved through the following:

Verif. Method	Verif. By	Plan	Notes/Comments
R	**ENG**	Review the design to verify HVAC calculations performed in support of EMF ventilation systems design use the required climate data parameters.	

3.8.3 System Interface Requirements

3.8.3.1 DELETED.

3.8.4 Other Technical, Specialty, Operations and Maintenance Requirements

3.8.4.1 Remote Damper Operation

Requirement: Remote operation of ACV and C1V system dampers shall be provided where accessibility is difficult and for dampers used in routine operations. [Section 9.1, ORD]

Basis Discussion: The intent of this requirement is to minimize the amount of time required to perform routine maintenance and (or) operations activities by providing remotely operated dampers where possible. In CCN 033014, *Operations Level of Automation Criteria*, "routine operations" is defined as operations anticipated to occur at least once per month. The use of remote actuation would allow significant reduction in operator or maintenance workload justifying additional installation and operating costs of remote action. [ALARA]

Verification: Verification is expected to be achieved through the following:

Verif. Method	Verif. By	Plan	Notes/Comments
R	**ENG**	Review the design of ACV and C1V system dampers to verify compliance with requirement to provide remote operability.	

3.8.4.2 Decontamination

Requirement: The ACV and DVP system equipment subject to decontamination shall be designed to withstand this process without any reduction of functionality through degradation of the electrical, mechanical, or any other components involved. [Section 9.1, ORD] (Table 2-4, G.4)

Basis Discussion: Equipment operating in a contaminated environment is monitored and, if necessary, decontaminated before maintenance. HEPA filters are not subject to decontamination and can be disposed of directly; therefore, the above requirement is not applicable for HEPA filters. The specifications must convey that the equipment design accounts for these processes. [ALARA]

Verification: Verification is expected to be achieved through the following:

Verif. Method	Verif. By	Plan	Notes/Comments
R	**ENG**	Review the ACV and DVP system equipment design to verify equipment/components can withstand decontamination without degradation or reduction in equipment functionality.	

3.8.4.3 Insulation for Protection from High Temperature Surfaces

Requirement: Where EMF ventilation systems operate at high temperatures and maintenance is required, insulation or protection shall be provided per OSHA requirements. [Section 15.1, ORD]

Basis Discussion: Insulation of protection from high temperature surfaces minimizes the risk of burning the skin when contact with the surface occurs.

Verification: Verification is expected to be achieved through the following:

Verif. Method	Verif. By	Plan	Notes/Comments
R	**ENG**	Review the design to verify the EMF ventilation system equipment that operates at high surface temperatures and where maintenance is required is insulated or protected.	

3.8.4.4 Thermal Insulation

Requirement: When thermal insulation is required around EMF ventilation system valves and in-line instruments, it shall be sectionalized to allow easy removal and replacement. [Section 11.16, ORD]

Basis Discussion: Personnel protection insulation reduces the temperature of exposed surfaces in accessible areas so that personnel are not harmed by physical contact. Equipment accessibility is a consideration of the general plant lay-out and valve and in-line instrument design.

Verification: Verification is expected to be achieved through the following:

Verif. Method	Verif. By	Plan	Notes/Comments
R	**ENG**	Review the design to verify insulation provided around valves and in-line instruments is sectionalized to allow for easy removal and replacement.	

3.8.4.5 Ventilation System Accessibility

Requirement: EMF ventilation systems shall provide the capability to access and perform calibration, maintenance, periodic functional testing, and inspections of AHUs, non-manual dampers, fire dampers, and instrumentation without interruption of operations. EMF ventilation systems equipment requiring maintenance or replacement shall be accessible. [Sections 6.7, 8.1.2, 9.12, 12.6.3, BOD] [Sections 9.1, 14.1, 15.1, ORD]

Basis Discussion: Clearances are provided in the design for easy access to ventilation system equipment requiring calibration, maintenance, testing, inspection, or replacement. Adequate clearances around equipment accommodate maintenance and operations personnel and any encumbrances such as protective garments, respirators, portable lifting devices, and alignment equipment for pumps, etc. This requirement provides Operations with a verification of actual field configuration to ensure no other accessibility issues remain. [ALARA]

Verification: Verification is expected to be achieved through the following:

Verif. Method	Verif. By	Plan	Notes/Comments
R	**ENG**	Review the design to verify equipment requiring maintenance or replacement is accessible or designed to support these activities.	
R	**ENG**	Review the design to verify the capability to perform calibration, maintenance, periodic functional testing, and inspections of equipment and components without interruption of operations from accessible areas (low dose, low contamination).	

3.8.4.6 Instrumentation Location

Requirement: The EMF ventilation systems instrumentation shall be located outside of R5/C5 areas when possible. Whenever possible, instruments and detectors for the C3 process areas that require maintenance shall be located outside the C3 contaminated areas. However, transducer panels housing liquid level systems and associated input/output, and pressure transducers, shall be located in the C3 classified area as a precaution against back-contamination. [Sections 9.1, 11.16, ORD]

Basis Discussion: Locating instruments and instrumentation panels outside of C5/R5 areas reduces the plant personnel exposure. Whenever possible, instrumentation and control equipment is located in C3 or lower areas. [ALARA]

Verification: Verification is expected to be achieved through the following:

Verif. Method	Verif. By	Plan	Notes/Comments
R	**ENG**	Review the design to verify the instruments for the EMF ventilation systems are located outside of R5/C5 areas when possible.	

3.8.4.7 Minimum Design Life

Requirement: Non-replaceable, non-maintainable, permanent EMF ventilation system plant equipment shall be designed for a minimum design life of 40 years, inclusive of maintenance. Design life of equipment shall consider the effects of chemical, radiological and thermal exposure. [Sections 11.1.1, 11.7.4, 12.6.1, BOD]

Basis Discussion: Equipment and material selection is based on proven performance, value engineering principles, and fit-for-function principles. The selection of equipment and materials is further addressed in detail as the design progresses. Equipment design needs to consider the routine environmental exposures under normal operations for non-safety equipment; this minimizes the need for equipment maintenance, exposure, and radiological waste generation in radiological areas. [ALARA]

Verification: Verification is expected to be achieved through the following:

Verif. Method	Verif. By	Plan	Notes/Comments
R	**ENG**	Review the design to verify the design life of non-safety non-replaceable, non-maintainable SSCs is documented in procurement documents and supported by supplier certificates of conformance.	

3.8.4.8 Contamination Protection

Requirement: The ACV and DVP systems shall be provided with suitable isolation provisions to prevent diffusion, backflow, or other methods of leakage of the contents to areas where the material is not intended. [Section 15.1, ORD] [Section 5.1.2, BOD]

Basis Discussion: Backflow provisions prevent contamination from areas of greater contamination potential from entering areas of lower contamination potential in the event of a loss of differential pressure between the two areas. [ALARA]

Verification: Verification is expected to be achieved through the following:

Verif. Method	Verif. By	Plan	Notes/Comments
R	**ENG**	Review the design to verify suitable isolation provisions to prevent diffusion, backflow, or other methods of leakage of the contents to areas where the material is not intended are included.	

3.8.4.9 Steam Line Lagging

Requirement: Steam line lagging shall not cover ACV system valves and other equipment such as to prevent its use and identification, and not introduce hazards when removing or replacing the lagging, (sharp edges, etc.). Lagging blankets shall be installed if access is required regularly. [Section 7.1, ORD]

Basis Discussion: The ability to access and identify valves and other equipment contained in steam system piping is a consideration for the design of lagging and incorporation of lagging blankets in the design. Design for accessibility and maintainability supports continued operation of the steam and HVAC systems.

Verification: Verification is expected to be achieved through the following:

Verif. Method	Verif. By	Plan	Notes/Comments
R	**ENG**	Review the design of the steam system piping to verify any provided lagging does not impact the continued use and identification of in-line components and instruments.	
R	**ENG**	Review the design of the steam system piping to verify blankets are provided in locations where regular access to steam system piping is required.	

3.8.4.10 Permanently Lubricated Components

Requirement: Permanently lubricated, sealed for life components shall be used wherever possible in the EMF ventilation systems in order to reduce maintenance requirements. [Section 9.1, ORD]

Basis Discussion: Use of permanently lubricated, sealed for life components wherever possible ensures that the need for maintenance is minimized, which supports maintaining facility worker exposure levels ALARA. [ALARA]

Verification: Verification is expected to be achieved through the following:

Verif. Method	Verif. By	Plan	Notes/Comments
R	**ENG**	Review the design to verify permanently lubricated, sealed for life components are used in the ACV and DVP system designs wherever practical.	

3.8.4.11 Ventilation System Motors

Requirement: The motors used in the EMF ventilation systems shall comply with the following requirements:

- Motors shall be squirrel-caged induction type
- Motors in hazardous locations shall have enclosures constructed for the area in which they are installed
- Motors powered from adjustable speed drives shall be definite-purpose inverter fed polyphase type
- Motors 20-hp or larger located outdoors, unless specific operating conditions dictate otherwise, shall be equipped with space heaters. The power source for the space heaters shall be 120-V AC individually protected.
- Premium efficiency motors shall be used, where practical

[Section 8.4.8, BOD] [Section 16.1, ORD]

Basis Discussion: Motors should be qualified to function in the environment in which they are installed. The selection of enclosures considers the specific conditions of the installation location.

Verification: Verification is expected to be achieved through the following:

Verif. Method	Verif. By	Plan	Notes/Comments
R	**ENG**	Review the design of HVAC motors to verify adherence to the criteria listed in the requirement.	

3.8.4.12 Power and Instrumentation Connections

Requirement: Plugs and electrical connectors shall be used in the EMF ventilation systems for power and instrumentation connections instead of hard wiring, where practical. [Section 9.1, ORD]

Basis Discussion: The use of plugs and electrical connectors minimizes the time and type of crafts required to perform maintenance work.

Verification: Verification is expected to be achieved through the following:

Verif. Method	Verif. By	Plan	Notes/Comments
R	**ENG**	Review the design to verify plugs and electrical connectors are used for HVAC power and instrumentation connections, where practical.	

3.9 C1V System Requirements

3.9.1 Mission and Functional/Performance Requirements (Including States/Modes)

3.9.1.1 Confine Hazardous Materials

None.

3.9.1.2 Draw and Supply Air

3.9.1.2.1 Supply Air to the Electrical Building

Requirement: The LAW effluent electrical building shall receive conditioned air independently of the ACV system via the C1V system. [Section 12.15, BOD] (Table 2-3, C.1) (Table 2-3, C.2)

Basis Discussion: To mitigate the potential for release of radioactive contamination to uncontaminated areas, the LAW effluent electrical building is provided with a separate, standalone ventilation system that is independent of the ventilation systems serving the LAW effluent process and utility buildings. The electrical building has no direct interface with process or utility areas, and therefore does not have any credible potential for exposure contamination.

Verification: Verification is expected to be achieved through the following:

Verif. Method	Verif. By	Plan	Notes/Comments
R	**ENG**	Review the design to verify the LAW effluent electrical building receives conditioned air independently of the ACV system via the C1V system.	

3.9.1.2.2 C1V System Outdoor Air Ventilation Intakes

Requirement: The C1V system outdoor air ventilation intake design shall include 3/4-inch square bird screens in order to preclude frost buildup. The C1V system outdoor air ventilation intakes shall be located so that they are protected from inclement weather (e.g., prevailing wind direction for minimizing wind pressure effects), as well as located so that emergency power equipment exhaust fumes cannot enter. [Section 12.14, BOD] [Section 15.1, ORD] (Table 2-3, A.1)

Basis Discussion: In order to prevent plugging of building air intake filters due to frost buildup, frost prevention means are required on building air intakes. Additionally, high winds have the potential to impact indoor pressure gradients and exhaust fumes from equipment and trucks have to potential to impact indoor air quality, so the effects of each are considered when choosing the location for outdoor air ventilation intakes.

Verification: Verification is expected to be achieved through the following:

Verif. Method	Verif. By	Plan	Notes/Comments
R	**ENG**	Review the design to verify ¾-inch square bird screens are provided on outdoor air ventilation intakes for frost prevention purposes.	
R	**ENG**	Review the design to verify outdoor air ventilation intakes are located such that the intakes are protected from inclement weather and such that emergency power equipment exhaust fumes cannot enter.	

3.9.1.3 Remove Particulates

None.

3.9.1.4 Condition Air

3.9.1.4.1 Electrical Area Conditioned Air Supply

Requirement: Conditioned air shall be provided to the electrical area of the LAW effluent electrical building by direct EC-type AHUs or by DX heat pump air conditioning units (ACUs). [Section 12.15.1.2, BOD] (Table 2-3, C.1)

Basis Discussion: The option to use either EC-type AHUs or DX heat pump ACUs provides design flexibility and allows the best option to be selected based on cost considerations and building requirements.

Verification: Verification is expected to be achieved through the following:

Verif. Method	Verif. By	Plan	Notes/Comments
R	**ENG**	Review the design to verify that either EC-type AHUs or DX heat pump ACUs supply the electrical area of the LAW effluent electrical building.	

3.9.1.4.2 Control and Battery Areas Conditioned Air Supply

Requirement: Conditioned air shall be provided to the control and battery areas of the LAW effluent electrical building by direct EC-type AHUs or DX heat pump air conditioning units (ACUs). [Section 12.15.1.2, BOD] [Section 16.3, ORD] (Table 2-3, C.2)

Basis Discussion: Direct EC-type AHUs or DX heat pump air conditioning units provide adequate heating/cooling capability for the integrated control network (ICN) equipment and battery rooms of the LAW effluent electrical building. Battery rooms are environmentally controlled to optimize cell service life.

Verification: Verification is expected to be achieved through the following:

Verif. Method	Verif. By	Plan	Notes/Comments
R	**ENG**	Review the design to verify either direct EC-type AHUs or DX heat pump ACUs supply the control and battery rooms of the LAW effluent electrical building.	

3.9.1.4.3 C1 Area Internal Temperatures

Requirement: The C1V system shall provide cooling and heating in order to maintain internal unoccupied design conditions listed in the BOD, Table 12-1. [Section 15.1, ORD] [Section 12.15.1.3, Table 12-1, BOD] (Table 2-3, B.1) (Table 2-3, B.3)

Basis Discussion: The C1V system should be designed to provide a suitable environment for the proper operation of equipment located in C1 areas of the EMF.

Verification: Verification is expected to be achieved through the following:

Verif. Method	Verif. By	Plan	Notes/Comments
A	ENG	Perform an analysis to verify that the internal temperatures are held within the ranges tabulated under established site conditions.	
R	ENG	Review the design to verify conformance with the results of the analysis.	

3.9.1.4.4 C1 Area Internal Humidity

Requirement: The C1V system shall supply humidification in order to maintain internal unoccupied design conditions listed in the BOD, Table 12-1. [Section 12.15.1.3, Table 12-1, BOD] (Table 2-3, B.2)

Basis Discussion: Sufficient humidification is required to prevent problems for electronics associated with static electricity discharges.

Verification: Verification is expected to be achieved through the following:

Verif. Method	Verif. By	Plan	Notes/Comments
A	ENG	Perform an analysis to verify that the internal relative humidity is held within the ranges tabulated under established internal design conditions.	
R	ENG	Review the design to verify conformance with the results of the analysis.	

3.9.1.5 Exhaust Air

3.9.1.5.1 Battery Room Ventilation and Status Indication

Requirement: The C1V system shall provide the ventilation capability for battery rooms of the LAW effluent electrical building to prevent hydrogen accumulation. The ventilation of battery rooms within the LAW effluent electrical building shall not be combined with other areas to prevent personnel exposure to hazardous fumes. Local indication shall be provided at each entrance door to provide exhaust fan status. [Section 12.15.1.2, BOD] [Section 15.1, ORD] (Table 2-3, D.1)

Basis Discussion: The ventilation capability for the LAW effluent electrical building battery room prevents hydrogen gas produced by the battery banks from concentrating to dangerous levels. Indication of exhaust fan status at each entrance door ensures that workers do not enter the battery room unless the exhaust fan is operational.

Verification: Verification is expected to be achieved through the following:

Verif. Method	Verif. By	Plan	Notes/Comments
R	ENG	Review the design to verify the C1V system provides ventilation of battery rooms.	
R	ENG	Review the design to verify local indication of exhaust fan status is provided at each entrance door.	
R	ENG	Review the design to verify the battery room ventilation is not combined with any other areas.	

3.9.2 Nuclear Safety, ALARA, Environmental and Other Regulatory Requirements

None.

3.9.3 System Interface Requirements

None.

3.9.4 Other Technical, Specialty, Operations and Maintenance Requirements

None.

3.10 ACV Supply System Requirements

3.10.1 Mission and Functional/Performance Requirements (Including States/Modes)

3.10.1.1 Confine Hazardous Materials

None.

3.10.1.2 Draw and Supply Air

3.10.1.2.1 ACV Supply System Air

Requirement: The ACV supply system shall be designed to operate on 100 % filtered outside air and shall supply air to the process and utility areas of the EMF. [Sections 12.15, 12.15.1.1, BOD] [Section 6.3, NOC 1043] (Table 2-4, A.1) (Table 2-4, C.1)

Basis Discussion: Since the ACV supply system supplies air to EMF areas that could potentially be contaminated, no supply air is recirculated to the ACV supply system AHUs; rather, all supply air is exhausted from the building after passing through HEPA filtration. The process and utility areas of the EMF have the potential for radiological release and therefore should be maintained by an active confinement ventilation system that mitigates the risks associated with these potential releases.

Verification: Verification is expected to be achieved through the following:

Verif. Method	Verif. By	Plan	Notes/Comments
R	**ENG**	Review the design to verify ACV supply system AHUs only operate on 100% filtered outside air.	
R	**ENG**	Review the design to verify that the ACV system supplies air to the process and utility areas of the EMF.	

3.10.1.2.2 ACV System Outdoor Air Ventilation Intakes

Requirement: The ACV supply system outdoor air ventilation intake design shall include 3/4-inch square bird screens in order to preclude frost buildup. The ACV supply system outdoor air ventilation intakes shall be located so that they are protected from inclement weather (e.g., prevailing wind direction for minimizing wind pressure effects), as well as located so that emergency power equipment exhaust fumes cannot enter. [Section 12.14, BOD] [Section 15.1, ORD]

Basis Discussion: In order to prevent plugging of building air intake filters due to frost buildup, frost prevention means are required on building air intakes. Additionally, high winds have the potential to impact indoor pressure gradients and exhaust fumes from equipment and trucks have to potential to impact indoor air quality, so the effects of each are considered when choosing the location for outdoor air ventilation intakes.

Verification: Verification is expected to be achieved through the following:

Verif. Method	Verif. By	Plan	Notes/Comments
R	**ENG**	Review the design to verify ¾-inch square bird screens are provided on outdoor air ventilation intakes for frost prevention purposes.	
R	**ENG**	Review the design to verify outdoor air ventilation intakes are located such that the intakes are protected from inclement weather and such that emergency power equipment exhaust fumes cannot enter.	

3.10.1.3 Remove Particulates

None.

3.10.1.4 Condition Air

3.10.1.4.1 EMF Internal Temperatures

Requirement: The ACV supply system shall provide cooling and heating to the process and utility areas of the EMF in order to maintain unoccupied internal design conditions listed in Table 12-1 of the BOD. [Section 12.15.1.3, Table 12-1, BOD] [Section 15.1, ORD] (Table 2-4, B.1) (Table 2-4, B.3)

Basis Discussion: The ACV supply system provides a conditioned working environment within the process and utility areas of the LAW effluent process building, LAW effluent drain tank building, and LAW effluent utility building that is consistent with the facilities being unoccupied.

Verification: Verification is expected to be achieved through the following:

Verif. Method	Verif. By	Plan	Notes/Comments
A	**ENG**	Perform an analysis to verify that the internal temperatures are held within the ranges tabulated under established internal design conditions.	
R	**ENG**	Review the design to verify conformance with the results of the analysis.	

3.10.1.4.2 EMF Internal Humidity

Requirement: The ACV supply system shall provide humidification to the process and utility areas of the EMF in order to maintain internal design conditions for unoccupied areas listed in the BOD, Table 12-1. [Section 12.15.1.3, Table 12-1, BOD] (Table 2-4, B.2)

Basis Discussion: Sufficient humidification is required to prevent problems for electronics associated with static electricity discharges.

Verification: Verification is expected to be achieved through the following:

Verif. Method	Verif. By	Plan	Notes/Comments
A	**ENG**	Perform an analysis to verify that the internal relative humidity is held within the ranges tabulated under established internal design conditions.	
R	**ENG**	Review the design to verify conformance with the results of the analysis.	

3.10.2 Nuclear Safety, ALARA, Environmental and Other Regulatory Requirements

None.

3.10.3 System Interface Requirements

None.

3.10.4 Other Technical, Specialty, Operations and Maintenance Requirements

3.10.4.1 Smoke Control

Requirement: The ACV system isolation dampers used for smoke control shall be actuated by smoke detectors located in the immediate damper vicinity and can be remotely reset from a manned control area. [Section 12.10.2, BOD]

Basis Discussion: Isolation dampers used for smoke control are selected and installed to provide safe operation during all operating conditions consistent with all fire protection codes and standards.

Verification: Verification is expected to be achieved through the following:

Verif. Method	Verif. By	Plan	Notes/Comments
R	ENG	Review the design to verify that isolation dampers used for smoke control are shut upon actuation of smoke detectors in the immediate damper vicinity and can be remotely reset from a manned control area.	

3.10.4.2 Humidifier Control

Requirement: The ACV system humidification components shall be automatically controlled during normal operation. [Section 12.7.4.3, BOD]

Basis Discussion: The humidification function of the ACV system is automatically controlled so that constant operator intervention is not required during normal operations.

Verification: Verification is expected to be achieved through the following:

Verif. Method	Verif. By	Plan	Notes/Comments
R	ENG	Review the design to verify that the ACV system humidification components are automatically controlled.	

3.11 ACV Exhaust System Requirements

3.11.1 Mission and Functional/Performance Requirements (Including States/Modes)

3.11.1.1 Confine Hazardous Materials

3.11.1.1.1 Ventilation for Sampling Enclosures

Requirement: The ACV system shall have the capability to provide ventilation for sampling enclosures if provided within the EMF. (Table 2-2, D.3) (Table 2-4, E.1)

Basis Discussion: The capability of the ACV system to provide confinement ventilation in sampling enclosures is a functional requirement of the ventilation system. [ALARA]

Verification: Verification is expected to be achieved through the following:

Verif. Method	Verif. By	Plan	Notes/Comments
R	ENG	Review the design to verify ventilation capability is provided in sampling enclosures.	

3.11.1.2 Draw Air

None.

3.11.1.3 Remove Particulates

3.11.1.3.1 HEPA Filtration

Requirement: Conditioned air shall pass through a single stage of HEPA filters located in the LAW Effluent Utility Building before being exhausted by the ACV exhaust system. [Section 12.15.1.1, BOD] [Sections 6.1, 6.3, NOC 1043] (Table 2-4, D.1)

Basis Discussion: New radioactive air emission units are required to comply with the best available radionuclide control technology (BARCT). The number of stages of HEPA filtration and filter efficiency are determined in accordance with applicable codes and standards for the demonstration of regulatory compliance.

Verification: Verification is expected to be achieved through the following:

Verif. Method	Verif. By	Plan	Notes/Comments
R	ENG	Review the design to verify that conditioned air provided to the process and utility areas of the EMF passes through a single stage of HEPA filtration located in the LAW Effluent Utility Building.	

3.11.1.3.2 Standby Filter Banks

Requirement: The ACV exhaust system shall have a standby filter bank. [Section 15.1, ORD]

Basis Discussion: Standby filter banks facilitate filter change-out without interrupting the normal operation of the ventilation system. [ALARA]

Verification: Verification is expected to be achieved through the following:

Verif. Method	Verif. By	Plan	Notes/Comments
R	ENG	Review the design to verify a standby filter bank is included in the ACV exhaust system.	

3.11.1.3.3 DELETED.

3.11.1.3.4 DELETED.

3.11.1.3.5 HEPA Filter Loading

Requirement: The ACV exhaust system design shall provide for constant flow or constant pressure such that gradual filter loading does not affect established limits. Consideration shall be given to providing automatic systems to control the established parameter. [Section 15.1, ORD]

Basis Discussion: The exhaust fan flow varies based on the pressure at the inlet to the HEPA filters. Exhaust flow is directly based on this inlet pressure, and the speed of the exhaust fan is adjusted to maintain the pressure at the HEPA filter inlet as the filter is loaded with particulate. The filter high differential pressure alarm sounds when the pressure on the exhaust side of the HEPA filter becomes too high, thereby indicating that the filter is full and a filter change is required.

Verification: Verification is expected to be achieved through the following:

Verif. Method	Verif. By	Plan	Notes/Comments
A	**ENG**	Perform an analysis to verify that the ACV system design includes an allowance for filter loading such that the fan system may maintain constant flow or constant pressure such that gradual filter loading does not affect established limits.	
R	**ENG**	Review the design to verify conformance with the results of the analysis.	

3.11.1.4 Condition Air

None.

3.11.1.5 Exhaust Air

3.11.1.5.1 Discharge Stack Design

Requirement: The ACV exhaust system design shall provide for an appropriate stack height and location to ensure adequate dispersal and to prevent re-entry of exhaust air to the building air intake. [Section 15.1, ORD] (Table 2-4, E.1)

Basis Discussion: Sufficient stack height and exhaust discharge velocity is required to ensure exhaust air is not re-introduced through the building air supply systems. [ALARA]

Verification: Verification is expected to be achieved through the following:

Verif. Method	Verif. By	Plan	Notes/Comments
A	**ENG**	Perform an analysis to verify the design meets the requirement to prevent exhaust re-entrainment for the designed stack height and velocities.	
R	**ENG**	Review the duct layout drawings to verify the stack location and height are consistent with the analysis.	

3.11.1.5.2 Discharge Stack Velocity

Requirement: The ACV system stack discharge velocity shall be sufficient to prevent rainwater intrusion during operation. [Section 15.1, ORD] (Table 2-4, E.1)

Basis Discussion: If an alternate solution is available, the designer may pursue a change notice or exception to the ORD to allow the alternate solution to be used.

Verification: Verification is expected to be achieved through the following:

Verif. Method	Verif. By	Plan	Notes/Comments
A	**ENG**	Perform an analysis to verify that the ACV system stack discharge velocities meet the requirement to prevent rainwater intrusion.	

Verif. Method	Verif. By	Plan	Notes/Comments
R	ENG	Review the stack design to verify the stack discharge velocity is adequate to prevent rainwater intrusion.	
T	SU/COM	Perform a test to verify the required discharge velocity is achieved.	Notify results to the WDOH in accordance with air permit requirements.

3.11.1.5.3 Filter Isolation Dampers

Requirement: The ACV exhaust system shall have manually operated isolation dampers installed upstream and downstream of the filter banks to facilitate filter changing. [Section 15.1, ORD] [Section 12.7.3.3, BOD]

Basis Discussion: The manually operated dampers provide isolation of the HEPA filter housing so that the filter can be changed out without affecting the air flow through the HEPA filter bank. [ALARA]

Verification: Verification is expected to be achieved through the following:

Verif. Method	Verif. By	Plan	Notes/Comments
R	ENG	Review the design to verify manual isolation dampers are included upstream and downstream of filters.	

3.11.1.5.4 Exhaust Configuration

Requirement: The ACV exhaust shall be combined with HEPA-filtered air from the DVP system downstream of the ACV exhaust fans and discharged to the atmosphere via the EMF stack. [Section 6.3, NOC 1043] (Table 2-4, E.1)

Basis Discussion: The ACV exhaust is ducted through a dedicated flue to support monitoring of the exhaust stream as required by environmental permits.

Verification: Verification is expected to be achieved through the following:

Verif. Method	Verif. By	Plan	Notes/Comments
R	ENG	Review the design to verify the ACV system exhaust is combined with HEPA-filtered air from the DVP system downstream of the ACV exhaust fans and is ducted through a flue and into the EMF stack.	

3.11.1.6 Sample Air

3.11.1.6.1 ACV Exhaust System Emission Monitoring

Requirement: Air emissions from EMF process and utility areas shall be environmentally sampled and/or monitored to ensure compliance with regulatory requirements. The ACV exhaust system shall have provisions for instrumentation and (or) sampling in support of radiological monitoring. [Sections 9.4.12, 9.4.12.2, 12.15, 12.5.1.1, BOD] [Sections 8.2, 15.1, ORD] [Section 9.1, NOC 1043] (Table 2-4, F.2)

Basis Discussion: The EMF stack design interfaces with SDJ for continuous radiological monitoring, as well as periodic sampling. The actual monitoring of the exhaust stream is within the scope of the SDJ system. [ALARA]

Verification: Verification is expected to be achieved through the following:

Verif. Method	Verif. By	Plan	Notes/Comments
R	**ENG**	Review the design to verify the EMF stack design interfaces with SDJ for continuous radiological monitoring, as well as periodic sampling.	

3.11.2 Nuclear Safety, ALARA, Environmental, and Other Regulatory Requirements

None.

3.11.3 System Interface Requirements

None.

3.11.4 Other Technical, Specialty, Operations and Maintenance Requirements

None.

3.12 DVP System Requirements

3.12.1 Mission and Functional/Performance Requirements (Including States/Modes)

3.12.1.1 DVP System Configuration

Requirement: The DEP system vessel vent and after-condenser exhaust streams shall be passed through a pre-heater and a dedicated two-stage HEPA filtration system prior to their discharge into the building stack downstream of the ACV HEPA filters and fans. [Section 12.15.2, BOD] [Sections 6.1, 6.2, NOC 1043] (Table 2-4, D.2) (Table 2-4, E.1)

Basis Discussion: New radioactive air emission units are required to comply with the best available radionuclide control technology (BARCT). The pre-heater mitigates the parameters that could affect the function or integrity of the BARCT under normal operating conditions. DVP off-gas streams are HEPA filtered prior to discharge to remove any free radioactive particulate contamination that may be present in the vessel vent off-gas. Discharge into the building stack must occur upstream of any required stack monitoring systems. [ALARA]

Verification: Verification is expected to be achieved through the following:

Verif. Method	Verif. By	Plan	Notes/Comments
R	**ENG**	Review the design to verify vessel vent and after-condenser off-gas is passed through a pre-heater and a dedicated two-stage HEPA filtration system prior to discharge downstream of the ACV HEPA filters and fans and into the building stack.	

3.12.1.2 Hydrogen Purging

Requirement: The DEP system process vessels shall interface with the DVP system for the capability of purging hydrogen. [Section 6.1, BOD] (Table 2-2, D.2) (Table 2-4, C.2)

Basis Discussion: Process vessels are ventilated to prevent hydrogen accumulation at concentrations above those specified in the authorization basis for the EMF.

Verification: Verification is expected to be achieved through the following:

Verif. Method	Verif. By	Plan	Notes/Comments
R	**ENG**	Review of design to verify the DEP system process vessels interface with the DVP system for the capability of purging hydrogen.	

3.12.1.3 DELETED.

3.12.2 Nuclear Safety, ALARA, Environmental, and Other Regulatory Requirements

None.

3.12.3 System Interface Requirements

None.

3.12.4 Other Technical, Specialty, Operations and Maintenance Requirements

3.12.4.1 Operability and Maintenance Filter Changing

Requirement: The DVP system shall be designed with isolation valves installed upstream and downstream of HEPA filter units to facilitate filter changing. The need for valve indication status at the PCJ, and the need for automatic vs. direct action, shall be based on the individual system design requirements, including reliability and operator response during normal and off-standard conditions, and design basis events. [Section 15.1, ORD]

Basis Discussion: The valves provide isolation of the HEPA filter housing so that the filter can be changed out without effecting the air flow through the HEPA filter bank. [ALARA]

Verification: Verification is expected to be achieved through the following:

Verif. Method	Verif. By	Plan	Notes/Comments
R	**ENG**	Review the design to verify isolation valves are installed such that filters can be changed.	

3.12.4.2 DVP System Valve Lockout

Requirement: DVP system valves shall be designed and procured where possible to support lockout using commercially manufactured devices other than chains. [Section 7.1, ORD]

Basis Discussion: Design of DVP system valves for compatibility with commercial off-the-shelf locking devices supports maintainability, operability, and testing of the valves throughout the life of the valve.

Verification: Verification is expected to be achieved through the following:

Verif. Method	Verif. By	Plan	Notes/Comments
R	**ENG**	Review the design to verify all DVP system valves are designed and procured where possible to support lockout using commercially manufactured devices other than chains.	

3.12.4.3 DVP System Remote Valve Operation

Requirement: Remote valve operation from the LAW FCR shall be provided for DVP system valves located where accessibility is difficult, such as R5/C5 areas, and for valves used in routine operations. Manual valve reach rods, if necessary, shall be designed to be removed easily and, when reinstalled, only engage the valve in the correct alignment, using no more than two universals. Valves in remotely maintained areas that are repositioned to support processing (this includes support systems) shall have position indication from directly coupled positioning mechanisms unless other indications are available such as flow, level, pressure, etc.. [Section 14.4, ORD]

Basis Discussion: Remote operation is used to ensure the WTP facilities' design achieves occupational doses that are ALARA. The need for "remote" operation does not apply to a black cell or pit only, but instead applies to an automatic valve or other feature to operate a valve at a distance. Valve position indication signals can be visual, mechanical, electric, or electronic based on the valve location and type of valve. [ALARA]

Verification: Verification is expected to be achieved through the following:

Verif. Method	Verif. By	Plan	Notes/Comments
R	**ENG**	Review the design to verify remote operation is provided for DVP system valves located in areas where accessibility is difficult (e.g., R5/C5 areas) and for valves used in routine operations.	
R	**ENG**	Review the design to verify manual reach rods are easily removed and engage in the correct alignment using no more than two universals.	
R	**ENG**	Review the design to verify valves in remotely maintained areas have position indication from directly coupled positioning mechanisms unless other indications are available.	

3.12.4.4 DVP System Pipe Material

Requirement: The DVP system piping shall be constructed of stainless steel. [Section 12.15.2, BOD]

Basis Discussion: The strength, resistance to corrosion, and low maintenance properties of stainless steel make it an ideal material for use in the vessel vent process system. [ALARA]

Verification: Verification is expected to be achieved through the following:

Verif. Method	Verif. By	Plan	Notes/Comments
R	ENG	Review the design of the DVP system to verify that all piping is constructed of stainless steel.	

3.12.4.5 DVP System Temperature Element Installation

Requirement: DVP system temperature elements shall be installed in thermowells to allow removal without interrupting the process. [Section 11.16, ORD]

Basis Discussion: Installing temperature elements in thermowells reduces maintenance time and worker exposure to process gases. [ALARA]

Verification: Verification is expected to be achieved through the following:

Verif. Method	Verif. By	Plan	Notes/Comments
R	ENG	Review the DVP system design to verify temperature elements are installed in thermowells.	

3.13 HVAC Monitoring and Control Requirements

3.13.1 Mission and Functional/Performance Requirements (Including States/Modes)

3.13.1.1 EMF ACV and DVP System Control

Requirement: The startup, operation, and shutdown of the ACV and DVP systems shall be controlled and monitored from the LAW FCR through the PCJ system. [Sections 11.1, 15.1, ORD] [Section 12.7, BOD] (Table 2-4, F.1)

Basis Discussion: Interfacing with the PCJ system provides monitoring and control capability for HVAC systems serving EMF process and utility areas. EMF areas not served by the ACV or DVP systems (i.e., AFR room, pipe chase, and fire riser rooms), as well as all areas within the LAW effluent electrical building, are provided with standalone C1V system units to provide conditioned air and are controlled by local thermostats.

Verification: Verification is expected to be achieved through the following:

Verif. Method	Verif. By	Plan	Notes/Comments
R	ENG	Review the design to verify monitoring and control of the ACV and DVP systems can be accomplished via the PCJ system from the LAW FCR.	

3.13.1.2 Flow Metering and Indication

Requirement: The ACV system shall include provisions for air flow metering and indication. [Section 9.4.12.1, BOD] (Table 2-4, F.1)

Basis Discussion: These flow measurements are used in conjunction with monitoring or sampling data to account for total emissions from monitored/sampled point sources. Total emissions data (including volume and flow rate) are reported for the facility in accordance with the requirements of WAC 246-247.

Verification: Verification is expected to be achieved through the following:

Verif. Method	Verif. By	Plan	Notes/Comments
R	**ENG**	Review the design to verify the ACV system discharge point includes provisions for air flow metering and indication.	

3.13.1.3 Support for Startup and Commissioning Testing

Requirement: The ACV and DVP systems shall have provisions for the connection or insertion of temporary flow measurement equipment, pressure/leak testing equipment, or other test equipment needed for startup and commissioning purposes. [Section 9.4.12.1, BOD] [Sections 15.1, 19.12, ORD]

Basis Discussion: Test ports may be installed in various locations of the ACV and DVP systems to enable portable measurements of pressure, flow sampling, and other infrequent measurements during commissioning and flow balancing.

Verification: Verification is expected to be achieved through the following:

Verif. Method	Verif. By	Plan	Notes/Comments
R	**ENG**	Review the design to verify that test ports are incorporated into the ACV and DVP systems.	SU/COM to participate in this review.

3.13.1.4 Fan Start and Shutdown Sequence

Requirement: The ACV and DVP systems' control logic shall ensure the fan systems start and shut down in the correct order to maintain cascade ventilation during the fan start-up and shutdown sequences. [Sections 12.7, 12.7.2, BOD] (Table 2-4, F.1)

Basis Discussion: The intent of the requirement is to ensure cascade ventilation is maintained in all process and utility areas of the EMF. [ALARA]

Verification: Verification is expected to be achieved through the following:

Verif. Method	Verif. By	Plan	Notes/Comments
A	**ENG**	Perform an analysis to determine the correct fan start-up and shutdown sequence to verify that cascade ventilation is maintained during fan start-up and shutdown sequences.	
R	**ENG**	Review the design to verify conformance with the results of the analysis.	
T	**SU/COM**	Perform a test to verify that the sequence activates and both starts and shuts down the fan systems in the correct order.	

3.13.1.5 Supply and Exhaust Fan Monitoring

Requirement: If required, the run time of selected higher horsepower ACV and DVP system motors shall be monitored. [Section 7.1, ORD]

Basis Discussion: The PCJ system must be programmed to monitor the run time of any high horsepower motors contained in the HVAC system. This supports efficient scheduling of run-hour based preventative maintenance.

Verification: Verification is expected to be achieved through the following:

Verif. Method	Verif. By	Plan	Notes/Comments
R	**ENG**	Review the design to verify that applicable high horsepower motors are identified in the ACV and DVP system design and run hours of specified high horsepower motors can be monitored.	

3.13.1.6 DELETED.

3.13.2 Nuclear Safety, ALARA, Environmental, and Other Regulatory Requirements

3.13.2.1 HEPA Filter Differential Pressure Monitoring

Requirement: The differential pressure across each ACV and DVP system exhaust HEPA filter stage shall be measured by strain gauge pressure sensors. [Section 6.1, NOC 1043] (Table 2-4, F.1)

Basis Discussion: A minimum differential pressure measurement combined with a calculated total airflow is used to check for HEPA filter bypass. A loss of differential pressure without a coincident reduction in airflow is indicative of filter bypass. [ALARA]

Verification: Verification is expected to be achieved through the following:

Verif. Method	Verif. By	Plan	Notes/Comments
R	**ENG**	Review the ACV and DVP system designs to verify the differential pressure across each exhaust HEPA filter stage is measured by strain gauge pressure sensors.	

3.13.2.2 HEPA Filter Flow Monitoring

Requirement: The flow through the ACV and DVP system exhaust HEPA filter bank shall be measured by an averaging pitot tube with a magnehelic differential gauge or transmitter. [Section 6.1, NOC 1043] (Table 2-4, F.1)

Basis Discussion: A minimum differential pressure measurement combined with a calculated total airflow is used to check for HEPA filter bypass. A loss of differential pressure without a coincident reduction in airflow is indicative of filter bypass. [ALARA]

Verification: Verification is expected to be achieved through the following:

Verif. Method	Verif. By	Plan	Notes/Comments
R	**ENG**	Review the ACV and DVP system designs to verify the flow through each exhaust HEPA filter stage is measured by an averaging pitot tube with a magnehelic differential gauge or transmitter.	

3.13.2.3 Preheater Temperature Monitoring

Requirement: The inlet and outlet temperature of the DVP system HEPA preheater shall be measured by resistive temperature detectors. [Section 6.1, NOC 1043] (Table 2-4, F.1)

Basis Discussion: Measuring the temperature output of the preheater verifies that the unit is performing its function of mitigating parameters that could affect the function or integrity of the BARCT under normal operating conditions. [ALARA]

Verification: Verification is expected to be achieved through the following:

Verif. Method	Verif. By	Plan	Notes/Comments
R	**ENG**	Review the DVP system design to verify the inlet and outlet temperature of the HEPA preheater is measured by resistive temperature detectors.	

3.13.2.4 Waste Transfer Area Temperature Monitoring

Requirement: Air temperature monitoring shall be provided for waste transfer-associated areas that contain waste transfer pumps. [Section 2.1.1, ICD-31] [Section 2.1.1, ICD-30] (Table 2-4, F.1)

Basis Discussion: *Tank Farm Specific Administrative Controls,* (SAC) HNF-IP-1266, Section 5.8.8, Waste Transfer System Freeze Protection (WRPS 2015a), requires air temperature monitoring to ensure that the temperature of components located in waste transfer-associated structures is greater than 32°F.

Verification: Verification is expected to be achieved through the following:

Verif. Method	Verif. By	Plan	Notes/Comments
R	**ENG**	Review the EMF design to verify that air temperature monitoring is provided in areas containing waste transfer pumps.	

3.13.3 System Interface Requirements

None.

3.13.4 Other Technical, Specialty, Operations, and Maintenance Requirements

3.13.4.1 DELETED.

3.13.4.2 Fan Auto-Changeover

Requirement: The ACV and DVP system control logic shall ensure the fan auto-changeover systems detect the failure of an operational fan and automatically start the standby unit. [Section 15.1, ORD] [Section 12.7, BOD] (Table 2-4, F.1)

Basis Discussion: Control logics are used in lieu of fan auto-changeover systems to ensure the appropriate interlocks exist between operating and standby fans. This requirement only applies if a stand-by unit is specified in the design.

Verification: Verification is expected to be achieved through the following:

Verif. Method	Verif. By	Plan	Notes/Comments
R	**ENG**	Review the design to verify the control logic incorporates fan auto-changeover upon failure detection.	
T	**SU/ COM**	Perform a test to verify that upon simulated failure of an operational fan, ventilation system control logic automatically starts the standby unit.	

3.14 Underground Transfer Piping Requirements

Requirements included in this section are specific to the design of underground waste transfer lines that are within the scope of the DEP system and accommodate the DFLAW operating configuration. These lines consist of the combined treated feed and evaporator concentrate feed from the EMF to the LAW Facility (ICD-30), the evaporator feed/concentrate return from EMF to Tank Farms (ICD-31), and the dilute evaporator effluent from EMF to LERF/ETF (ICD-06). Refer to Section 3.6.5 for requirements associated with the design of all DEP piping systems that are not underground waste transfer lines.

3.14.1 Mission and Functional/Performance Requirements (Including States/Modes)

3.14.1.1 General Underground Transfer Piping Requirements

3.14.1.1.1 Double-Walled (Coaxial) Piping Testing

Requirement: Co-axial lines used as underground transfer lines shall have provisions to pneumatically test both the primary and secondary lines for leakage. [Section 11.2.3, BOD] [Section 14.3, ORD]

Basis Discussion: The use of coaxial piping ensures that secondary containment is provided for the primary (inner) transfer line for compliance with WAC requirements. [ALARA]

Verification: Verification is expected to be achieved through the following:

Verif. Method	Verif. By	Plan	Notes/Comments
R	**ENG**	Review the underground piping design to verify the capability to pneumatically test both the primary and secondary lines for leakage is included.	

3.14.1.1.2 Pipe Draining

Requirement: Underground transfer piping governed by ICD-30 and ICD-31 shall have provisions to drain the piping to the low point drain vessel and shall have no traps or pockets that can accumulate liquids or solids that cannot be drained either by operator action or through free draining design. [Sections 7.1, 14.3, 20.0, ORD] [Sections 11.3.1, 11.2.3, BOD] [Section 2.6.2, ICD-30] [Section 2.6.2, ICD-31] (Table 2-2, C.1)

Basis Discussion: For additional details on pipe sloping, refer to 24590-WTP-GPG-M-027, *Recommended Slopes for Piping System*. Level piping for a short distance through wall penetrations, at connections to equipment, and at jumpers is acceptable (Section 14.3, ORD). This is an ALARA feature because it ensures the pipes are drained of radioactive material if maintenance needs to be performed, and during decommissioning, which reduces dose and the potential to spread contamination. [ALARA]

Verification: Verification is expected to be achieved through the following:

Verif. Method	Verif. By	Plan	Notes/Comments
R	**ENG**	Review the ICD-30 and ICD-31 governed underground transfer piping design to verify piping is designed to drain.	

3.14.1.1.3 Pipe Flushing

Requirement: Underground transfer lines governed by ICD-30 and ICD-31 shall have the capability to be flushed. [Section 6.2.1, BOD] [Sections 14.1, 14.3, 20.0, ORD] [Section 1.2, ICD-30] [Sections 1.2, 2.6.2, ICD-31] (Table 2-2, D.1)

Basis Discussion: A flushing capability is provided for underground transfer piping systems to limit the accumulation of solids and reduce contamination in transfer piping. This is an ALARA feature because it facilitates removal of potentially contaminated material from process piping systems in support of decontamination. [ALARA]

Verification: Verification is expected to be achieved through the following:

Verif. Method	Verif. By	Plan	Notes/Comments
R	**ENG**	Review the ICD-30 and ICD-31 governed underground transfer piping design to verify a flushing capability is incorporated.	

3.14.1.1.4 DELETED. (Moved to 3.14.1.4.6)

3.14.1.1.5 Transfer Piping Depth

Requirement: All underground waste transfer piping shall be buried a minimum of 3 ft deep. [Section 10.1.5.7, BOD] [Section 2.1, ICD-06] [Section 2.1.1, ICD-31] [Section 2.1.1, ICD-30] (Table 2-2, G.2)

Basis Discussion: To avoid temperature monitoring requirements for buried piping, the TOC has a requirement for a minimum of 3 ft of cover soil over the waste feed lines (HNF-IP-1266, *Tank Farms Operations Administrative Controls*). This requirement also applies to the buried piping in the transfer system installed by the WTP Contractor. [ALARA]

Verification: Verification is expected to be achieved through the following:

Verif. Method	Verif. By	Plan	Notes/Comments
R	ENG	Review the design to verify the transfer piping is buried a minimum of 3 ft deep.	

3.14.1.1.6 Corrosion Protection of Underground Metallic Piping Systems

Requirement: Underground metallic piping systems and fittings shall be protected from external and stray current corrosion. [Section 11.1.1.1, BOD]

Basis Discussion: None.

Verification: Verification is expected to be achieved through the following:

Verif. Method	Verif. By	Plan	Notes/Comments
R	ENG	Review the design to verify that DEP underground metallic piping systems and fittings are protected from external and stray current corrosion.	

3.14.1.1.7 Radiation Shielding

Requirement: All underground radiological waste transfer lines shall be provided with adequate shielding to comply with ALARA goals. [Section 10.1.5.8, BOD]

Basis Discussion: Underground radiological waste transfer lines are shielded in support of meeting the target dose equivalent rate at the WTP site. Examples of adequate shielding include soil, concrete, or steel. [ALARA]

Verification: Verification is expected to be achieved through the following:

Verif. Method	Verif. By	Plan	Notes/Comments
R	ENG	Review the design of underground radiological waste transfer lines to verify that adequate shielding is provided.	

3.14.1.2 ICD-30 Requirements

Physical and administrative interactions that allow for the direct transfer of treated low-activity waste feed from the TOC to the LAW Facility in the DFLAW configuration are governed by the requirements of ICD-30. The underground waste transfer line between the WTP site boundary and the battery limit of the LAW Facility are within the scope of the DEP system, and is therefore included in this document. Section 3.14.1.2 addresses requirements associated with the physical design of the underground waste transfer line, while Section 3.15.1.2 addresses requirements associated with monitoring and control of transfers between the TOC and the LAW Facility.

3.14.1.2.1 Feed Transfer to the LAW Facility

Requirement: [HOLD] The DEP system shall be capable of transferring waste feed from the TOC through dedicated feed lines to the LAW Facility. The dedicated transfer line for the feed from the TOC to the LAW Facility shall have its physical interface at Node TBD of the WTP site boundary, shown on the *Interface Control Drawing*, 24590-WTP-B2-C12T-00001. [Section 6, BOD] [Sections 1.2, 2.1.1, ICD-30] (Table 2-2, A.1)

Basis Discussion: The underground waste transfer line supplying waste feed from the TOC to the LAW Facility is within the scope of the DEP system. The waste feed from the TOC is not processed by the DEP system, but the transfer piping has been included as part of DEP system scope as it accommodates the DFLAW operating configuration.

This requirement is on **[HOLD]** because ICD-30 has an open issue regarding this requirement. 24590-WTP-B2-C12T-00001 currently identifies this interface point as Node 13. The ICD-30 requirement will be updated once ICD-30 has been revised to reflect the issued interface design. Refer to Open Item #0001 in ICD-30 for additional details.

Verification: Verification is expected to be achieved through the following:

Verif. Method	Verif. By	Plan	Notes/Comments
R	**ENG**	Review the design to verify the DEP system interfaces with the TOC at the node specified on 24590-WTP-B2-C12T-00001 to enable waste feed transfers to the LAW Facility.	

3.14.1.2.2 Feed Transfer Piping Physical Characteristics

Requirement: DEP system underground waste feed transfer piping used for transfers from the TOC to the LAW Facility shall be independent of the of the transfer pipelines used to provide waste feed from the Tank Farms to the PT Facility. The DEP system underground waste feed transfer piping shall consist of a stainless steel pipe encased in a carbon steel secondary containment pipe. The encasement (exterior) pipe shall be insulated with rigid-polyurethane foam insulation, and shall be protected from corrosion by an epoxy coating and protected with a waterproof nonmetallic insulation jacket. The pipe shall be designed in accordance with the physical characteristics identified in Table 3-1, below. [Sections 2.1.1, 2.1.4, ICD-30] (Table 2-2, A.1)

Table 3-1 ICD-30 Transfer Pipeline Physical Characteristics

Characteristic	Primary (Inner) Pipe	Encasement Pipe
Pipe Class	S32B (BNI 2013a)	S32B (BNI 2013a)
Nominal Pipe Size (Inches)	3	6
Exterior Insulation Thickness	N/A	Minimum 1.5
Pipe Material	ASTM A 312, Grade TP 316L (S32B)	ASTM A 106, Grade B
Pipe Construction	Seamless	Seamless
Pipe Schedule	40S	Standard Weight

Basis Discussion: Both WTP and Tank Farms sections of the transfer pipeline are constructed according to approved procedures, approved permits, and Washington Administrative Code (WAC) 173-303, including code equivalency evaluations as required, to minimize interference during installation of pipelines and supporting system.

Verification: Verification is expected to be achieved through the following:

Verif. Method	Verif. By	Plan	Notes/Comments
R	**ENG**	Review the design to verify that the transfer pipeline between the TOC and the LAW Facility is a dedicated line.	
R	**ENG**	Review the design to verify that the transfer pipeline consists of a stainless steel pipe encased in a carbon steel secondary containment pipe and that the exterior pipe is insulated with rigid-polyurethane foam insulation and is protected from corrosion by an epoxy coating and protected with a waterproof nonmetallic insulation jacket.	
R	**ENG**	Review the design to verify the physical characteristics of the transfer pipeline are in accordance with Table 3-1.	

3.14.1.2.3 Feed Transfer Piping Design Pressure and Temperature

Requirement: [HOLD] The DEP system underground waste feed transfer piping used for transfers from the TOC to the LAW Facility shall be designed to not exceed the design pressure at the design temperature identified in Table 3-2, below. [Sections 2.1.1.1, 2.1.4, 2.7.1, ICD-30] (Table 2-2, A.1)

Table 3-2 ICD-30 Transfer Pipeline Design Pressure and Temperature

Characteristic	Primary (Inner) Pipe	Encasement Pipe
Line Number	LCP-PB-00000-S32B-03	LCP-PB-00000-S32B-03
Design Pressure (psig)	TBD	50/55
Design Temperature (°F)	TBD	150

Basis Discussion: ICD-30 identifies the design pressure and temperature of the existing LAW LCP piping, but if the LAWPS feed delivery system design pressure is higher, protection of the installed LAW LCP system piping will need to be evaluated.

This requirement is on **[HOLD]** because ICD-30 has an open issue regarding this requirement. The design pressure and temperature are identified as TBD in Table 2 of ICD-30 for the primary piping, and until the design input requirements for the piping are specified, this requirement is on HOLD. Refer to Open Item #0001 in ICD-30 for additional details.

Verification: Verification is expected to be achieved through the following:

Verif. Method	Verif. By	Plan	Notes/Comments
R	**ENG**	Review the design to verify the DEP system feed transfer piping used for transfers from the TOC to the LAW Facility is designed to not exceed the design pressure at the design temperature identified in Table 3-2	

3.14.1.2.4 Feed Transfer Piping Operating Pressure and Temperature

Requirement: [HOLD] The maximum operating pressure of the DEP system underground waste feed transfer piping used for transfers from the TOC to the LAW Facility shall be limited to 136 psig at a maximum operating temperature of 140°F during transfer of fluids between the TOC and WTP under normal conditions. [Sections 2.1.1.1, 2.7.1, ICD-30] (Table 2-2, A.1)

Basis Discussion: Maximum operating pressure limits are included for the DEP system feed transfer piping to protect existing LAW Facility pipelines and valves that have an established design pressure of 150 psig at a design temperature of 150 °F.

This requirement is on **[HOLD]** because ICD-30 has an open issue regarding this requirement. ICD-30 identifies the design pressure and temperature of the existing LAW LCP piping, but if the TOC feed delivery system design pressure is higher, protection of the installed LAW LCP system piping will need to be evaluated. Design pressure and temperature are identified as TBD in Table 2 of ICD-30 for the primary piping. The operating pressure and temperature must be bounded by the design pressure and temperature of the transfer piping, and so this requirement is also on HOLD until the design input requirements for the transfer piping are specified. Refer to Open Item #0001 in ICD-30 for additional details.

Verification: Verification is expected to be achieved through the following:

Verif. Method	Verif. By	Plan	Notes/Comments
R	**ENG**	Review the design to verify the DEP system feed transfer piping used for transfers from the TOC to the LAW Facility is limited to 136 psig at a maximum operating temperature of 140°F under normal conditions.	

3.14.1.2.5 DELETED. (Combined with 3.5.4.10)

3.14.1.3 ICD-31 Requirements

Physical and administrative interactions that allow for the transfer of evaporator concentrate/feed from the EMF to the Tank Farms DSTs in the DFLAW configuration are governed by the requirements in ICD-31. The underground waste transfer line between the EMF and the WTP site boundary is within the scope of the DEP system, and is therefore included in this document. Section 3.14.1.3 addresses requirements associated with the physical design of the underground waste transfer line, while Section 3.15.1.3 addresses requirements associated with monitoring and control of transfers between the EMF and the Tank Farms DSTs.

3.14.1.3.1 Evaporator Concentrate/Feed Transfer to Tank Farms

Requirement: [HOLD] The dedicated transfer line for the return of evaporator concentrate/feed from the EMF to Tank Farms shall have its physical interface at Node TBD of the WTP site boundary, as shown on the *Interface Control Drawing,* 24590-WTP-B2-C12T-00001. [Sections 1.2, 2.1.1, ICD-31] (Table 2-2, A.8.1)

Basis Discussion: Pipelines are provided from the EMF to the interface point with Tank Farms. The underground waste transfer line for return of concentrated effluent up to the interface point is within the scope of the DEP system.

This requirement is on **[HOLD]** because ICD-31 has an open issue regarding this requirement. 24590-WTP-B2-C12T-00001 currently identifies this interface point as Node 14. The ICD-31 requirement will be updated once ICD-31 has been revised to reflect the issued interface design. Refer to Open Item #0001 in ICD-31 for additional details.

Verification: Verification is expected to be achieved through the following:

Verif. Method	Verif. By	Plan	Notes/Comments
R	**ENG**	Review the design to verify the DEP system interfaces with the Tank Farms at the node specified on 24590-WTP-B2-C12T-00001 to enable the return of evaporator concentrate/feed.	

3.14.1.3.2 Evaporator Concentrate/Feed Transfer Piping Physical Characteristics

Requirement: A dedicated pipeline shall be used to transfer the evaporator concentrate/feed generated by the DEP system to Tank Farms. The effluent transfer pipeline shall consist of a stainless steel pipe encased in a carbon steel secondary containment pipe. The encasement (exterior) pipe shall be insulated with rigid polyurethane foam insulation, and protected from corrosion by an epoxy coating and waterproof nonmetallic insulation jacket. The pipeline design shall be designed in accordance with the physical characteristics identified in Table 3-3, below. [Sections 2.1.1, 2.1.4, ICD-31] (Table 2-2, A.8.1)

Table 3-3 ICD-31 Transfer Pipeline Physical Characteristics

Characteristic	Primary (Inner) Pipe	Encasement Pipe
Pipe Class	W31A (BNI 2015)	W31A (BNI 2015)
Nominal Pipe Size (Inches)	3	6
Exterior Insulation Thickness	N/A	Minimum 1.5 (BNI 2010)
Pipe Material	ASTM A 312, Grade TP 316L (W31A)	ASTM A 106, Grade B
Pipe Construction	Seamless	Seamless
Pipe Schedule	40S	Standard Weight

Basis Discussion: Both WTP and Tank Farms sections of the transfer pipeline are constructed according to approved procedures, approved permits, and Washington Administrative Code (WAC) 173-303, including code equivalency evaluations as required, to minimize interference during installation of pipelines and supporting system. [ALARA]

Verification: Verification is expected to be achieved through the following:

Verif. Method	Verif. By	Plan	Notes/Comments
R	**ENG**	Review the design to verify that the transfer pipeline between the DEP system and Tank Farms is a dedicated line.	
R	**ENG**	Review the design to verify that the transfer pipeline consists of a stainless steel pipe encased in a carbon steel secondary containment pipe and that the exterior pipe is insulated with rigid-polyurethane foam insulation and is protected from corrosion by an epoxy coating and protected with a waterproof nonmetallic insulation jacket.	
R	**ENG**	Review the design to verify the physical characteristics of the transfer pipeline are in accordance with Table 3-3.	

3.14.1.3.3 Evaporator Concentrate/Feed Transfer Piping Design Pressure and Temperature

Requirement: [HOLD] DEP system underground evaporator concentrate/feed transfer piping shall be designed to not exceed the design pressure at the design temperature identified in Table 3-4, below. [Sections 2.1.1.1, 2.1.4, ICD-31] (Table 2-2, A.8.1)

Table 3-4 ICD-31 Transfer Pipeline Design Pressure and Temperature

Characteristic	Primary (Inner) Pipe	Encasement Pipe
Line Number	DEP-ZS-00000-W31A-03	DEP-ZS-00000-W31A-03
Design Pressure (psig)	TBD	50/55
Design Temperature (°F)	TBD	150

Basis Discussion: Both WTP and Tank Farms sections of the transfer pipeline are constructed according to approved procedures, approved permits, and Washington Administrative Code (WAC) 173-303, including code equivalency evaluations as required, to minimize interference during installation of pipelines and supporting system.

This requirement is on **[HOLD]** because ICD-31 has an open issue regarding this requirement. Section 2.1.1.1 and Tables 2 and 3 of ICD-31 contain TBDs for key piping design input requirements, including the design pressure and temperature for the primary piping. Until these design input requirements are specified, this requirement is on HOLD. Refer to Open Item #0001 in ICD-31 for additional details.

Verification: Verification is expected to be achieved through the following:

Verif. Method	Verif. By	Plan	Notes/Comments
R	**ENG**	Review the design to verify the DEP system evaporator concentrate/feed transfer piping is designed to not exceed the design pressure at the design temperature identified in Table 3-4.	

3.14.1.3.4 Evaporator Concentrate/Feed Transfer Piping Operating Temperature and Pressure

Requirement: [HOLD] The maximum operating pressure of the DEP system underground evaporator concentrate/feed transfer piping shall not exceed the design pressure during the transfer of fluids between the EMF and Tank Farms, under normal and off-normal conditions. [Sections 1.2, 2.1.1.1, ICD-31] (Table 2-2, A.8.1)

Basis Discussion: Assurance that this limit is not exceeded is achieved through design or code compliant relief devices.

This requirement is on **[HOLD]** because ICD-31 has an open issue regarding this requirement. Section 2.1.1.1 and Tables 2 and 3 of ICD-31 contain TBDs for key piping design input requirements, including the design pressure and temperature for the primary piping. The operating pressure and temperature must be bounded by the design pressure and temperature of the transfer piping, and so this requirement is also on HOLD until the design input requirements for the transfer piping are specified. Refer to Open Item #0001 in ICD-31 for additional details.

Verification: Verification is expected to be achieved through the following:

Verif. Method	Verif. By	Plan	Notes/Comments
R	**ENG**	Review the process design to verify the maximum operating pressure of the DEP system evaporator concentrate/feed transfer piping does not exceed the design pressure during the transfer of fluids between the EMF and Tank Farms.	

3.14.1.3.5 DELETED. (Combined with 3.6.4.1.2)

3.14.1.3.6 DELETED. (Combined with 3.5.4.10)

3.14.1.3.7 DELETED.

3.14.1.4 ICD-06 Requirements

Physical and administrative interactions that allow for the transfer of dilute effluent from the EMF to LERF/ETF in the DFLAW configuration are governed by the requirements in ICD-06. The underground waste transfer line between the EMF and the WTP site boundary is within the scope of the DEP system, and is therefore included in this document. Section 3.14.1.4 addresses requirements associated with the physical design of the underground waste transfer line, while Section 3.15.1.4 addresses requirements associated with monitoring and control of transfers between the EMF and LERF/ETF.

3.14.1.4.1 Dilute Effluent Transfer

Requirement: Underground waste transfer lines shall be provided for the transfer of dilute effluents and LAW caustic scrubber effluent from the DEP system to LERF/ETF. The physical interface at the WTP site boundary shall be Nodes 8A and 8B, as shown on the *Interface Control Drawing*, 24590-WTP-B2-C12T-00001. [Section 6, BOD] [Sections 1.2, 2.1, 2.1.1, ICD-06] (Table 2-2, A.8.2)

Basis Discussion: The DEP system design should include a method to dispose of dilute effluents, including LAW caustic scrubber effluent, since they constitute the larger portion of effluent generated at the EMF.

Verification: Verification is expected to be achieved through the following:

Verif. Method	Verif. By	Plan	Notes/Comments
R	**ENG**	Review the design to verify that the physical interface of the dilute effluent transfer line to LERF/ETF is at Nodes 8A and 8B at the site boundary.	

3.14.1.4.2 Dilute Effluent Transfer Piping Configuration

Requirement: Two transfer lines (a primary and a backup) shall be provided to transfer dilute effluent from EMF to LERF/ETF. The primary transfer pipeline shall be a coaxial line constructed of 4 inch 316L stainless steel carrier pipe with an 8 inch carbon steel secondary containment pipe. The backup transfer pipeline shall be a coaxial line constructed of 3 inch 316L stainless steel carrier pipe with a 6 inch carbon steel secondary containment pipe. [Sections 1.2, 2.1, 2.1.1, ICD-06] (Table 2-2, A.8.2)

Basis Discussion: Piping is in accordance with applicable project piping codes and standards.

Verification: Verification is expected to be achieved through the following:

Verif. Method	Verif. By	Plan	Notes/Comments
R	**ENG**	Review the design to verify that two transfer lines (a primary and a backup) are provided to transfer dilute effluent from the EMF to LERF/ETF.	
R	**ENG**	Review the design to verify the correct size and material of construction is used for the primary and backup transfer pipelines.	

3.14.1.4.3 Dilute Effluent Transfer Piping Design Pressure

Requirement: DEP system underground dilute effluent transfer piping used for transfers from EMF to LERF/ETF shall be designed to a design pressure of 100 psig at a design temperature of 120°F. [Section 2.1, ICD-06] (Table 2-2, A.8.2)

Basis Discussion: Dilute effluent is transferred from EMF to LERF/ETF to support the throughput and design capacity requirements for the LAW Facility while operating in the DFLAW configuration.

Verification: Verification is expected to be achieved through the following:

Verif. Method	Verif. By	Plan	Notes/Comments
R	**ENG**	Review the design to verify the design pressure and temperature of the DEP system dilute effluent transfer piping is 100 psig and 120°F, respectively.	

3.14.1.4.4 DELETED. (Combined with 3.6.4.1.3)

3.14.1.4.5 DELETED. (Combined with 3.5.4.10)

3.14.1.4.6 Piping Design for Gravity Liquid Draining

Requirement: The underground transfer piping from the EMF to LERF/ETF shall include the capability to break a vacuum to allow gravity liquid draining. [Section 7.1, ORD] [Section 2.1.1, ICD-06]

Basis Discussion: The addition of a vacuum breaker, high point vent, or other design feature that provides the capability to break a vacuum within a transfer line ensures that air can be admitted and swept in the pipe, thereby restoring normal flow. This requirement applies only when the high point between the sending facility/system and receiving facility/system occurs within the DEP piping system. This is an ALARA feature because it allows lines to completely drain. [ALARA]

Verification: Verification is expected to be achieved through the following:

Verif. Method	Verif. By	Plan	Notes/Comments
R	**ENG**	Review the design of the DEP system underground transfer piping between the EMF and the LERF/ETF to verify a means of breaking a vacuum is provided.	

3.14.2 Nuclear Safety, ALARA, Environmental, and Other Regulatory Requirements

None.

3.14.3 System Interface Requirements

None.

3.14.4 Other Technical, Specialty, Operations, and Maintenance Requirements

None.

3.15 Underground Transfer Piping Monitoring and Control Requirements

Requirements included in this section are specific for the monitoring and control of underground waste transfer lines that are within the scope of the DEP system and accommodate the DFLAW operating configuration.

3.15.1 Mission and Functional/Performance Requirements (Including States/Modes)

3.15.1.1 General Underground Transfer Piping Monitoring and Controls Requirements

3.15.1.1.1 Coaxial Pipe Leak Detection

Requirement: All underground coaxial lines shall have on-line primary containment leak detection capability. [Sections 11.3.5.2, 14.10.1.3, BOD] [Section 14.3, ORD] (Table 2-2, C.3.1) (Table 2-2, E.1)

Basis Discussion: The leak detection system must be able to detect a leak within 24 hours of failure. Ecology has interpreted this requirement to mean the detection of 0.1 gallons per hour based on the DWP. It is acceptable for multiple coaxial lines to share a common leak detection box. However, operational impacts associated with identifying the source of any potential leak must be determined when considering use of a common leak detection box. The design of leak detection systems should consider the impacts on the DEP system operation if multiple coaxial lines must be isolated in order to identify the source of the leak. The verification of a leak detection capability is performed through testing detailed in Section 3.4.3.3.8 and is not repeated in the verification methods listed below. [ALARA]

Verification: Verification is expected to be achieved through the following:

Verif. Method	Verif. By	Plan	Notes/Comments
R	ENG	Review the design to verify there are provisions for leakage detection for the underground coaxial lines.	

3.15.1.2 ICD-30 Monitoring and Controls Requirements

3.15.1.2.1 Feed Transfer Leak Detection Interlock

Requirement: The DEP system shall provide a permissive/shutdown signal (interlock) to the Tank Farm Monitoring and Control System to shutdown transfer of waste feed to the LAW Facility if a leak is detected by WTP (at minimum). [Sections 1.2, 2.1.2, ICD-30] [Section 7.1, ORD] (Table 2-2, E.1)

Basis Discussion: The DEP system provides monitoring information of its transfer lines and vessel systems to incorporate into the Tank Farm Monitoring and Control System. Typical inputs to the interlock signal may include leak detection, vessel levels, valve alignment, transfer times, and ventilation signals. [ALARA]

Verification: Verification is expected to be achieved through the following:

Verif. Method	Verif. By	Plan	Notes/Comments
R	**ENG**	Review the design to verify that an interlock exists to shutdown the transfer to the LAW Facility if a leak is detected by WTP (at minimum).	
T	**SU/ COM**	Perform a test to verify that a permissive/shutdown signal is sent to the Tank Farms Monitoring and Control System to shutdown transfer in the event of leak detection by WTP (at minimum).	

3.15.1.2.2 Feed Transfer Loss of Permissive Interlock

Requirement: If the permissive/shutdown signal (interlock) from the DEP system or from the TOC is lost during the transfer of feed to the LAW Facility, a transfer shutdown process shall initiate to a fail-safe state. [Section 2.1.2, ICD-30] [Section 7.1, ORD] (Table 2-2, E.1)

Basis Discussion: Typical inputs to the interlock signal may include leak detection, vessel level, valve alignment, transfer timers, and ventilation signals. The TOC and the DEP system provide monitoring information for their respective transfer lines and feed tank/feed receipt systems to incorporate into the Tank Farms Monitoring and Control System.

Verification: Verification is expected to be achieved through the following:

Verif. Method	Verif. By	Plan	Notes/Comments
R	**ENG**	Review the design to verify that if the permissive/shutdown signal from the DEP system or from the TOC is lost during transfer, the transfer shutdown process is initiated to a fail-safe state.	
T	**SU/ COM**	Perform a test to verify that the transfer process to the LAW Facility is shutdown to a fail-safe state when the permissive/shutdown signal is lost from the DEP system or from the TOC during transfer.	

3.15.1.2.3 Feed Transfer Monitoring Information

Requirement: The DEP system shall provide monitoring information for the waste feed transfer line to the LAW Facility and feed tank/feed receipt systems to incorporate into the Tank Farms Monitoring and Control System. The interface for the instrumentation signal lines between the WTP and the TOC shall be located at the same interface as the transfer line physical interface. [Sections 1.2, 2.1.1, 2.1.2, ICD-30] (Table 2-2, E.1)

Basis Discussion: This is a data link allowing Tank Farms to see WTP process data while operating and during transfer.

Verification: Verification is expected to be achieved through the following:

Verif. Method	Verif. By	Plan	Notes/Comments
R	**ENG**	Review the design to verify that monitoring information of the transfer line to the LAW Facility and feed tank/feed receipt systems is provided for incorporation in Tank Farms Monitoring and Control System.	
T	**SU/ COM**	Perform a test to verify waste feed transfer line to the LAW Facility and feed tank/receipt system monitoring information is provided to the Tank Farms Monitoring and Control System.	

3.15.1.2.4 Feed Transfer Volume Balances

Requirement: The DEP system shall have the capability to measure the total volume of treated feed and flush water transferred during transfers to the LAW Facility. [Sections 1.2, 2.7.2, ICD-30] [Section 7.1, ORD] (Table 2-2, E.1)

Basis Discussion: Instrumentation is used to determine volume balances during transfers to WTP process vessels. Per ICD-30, the volume of treated feed and flush water received is to be documented and differences reconciled with the transfer volumes recorded by Tank Farms.

Verification: Verification is expected to be achieved through the following:

Verif. Method	Verif. By	Plan	Notes/Comments
R	**ENG**	Review the design to verify the DEP system has the capability to measure the total volume of treated feed and flush water during feed transfers to the LAW Facility.	

3.15.1.2.5 Monitoring of Feed Transfer Piping Flushes

Requirement: Total flow, total volume, and density monitoring equipment shall be included in the design of the DEP system feed transfer piping to the LAW Facility for the detection of the end of feed transfer and the beginning of flushing. Upon detection of the end of feed transfer and the beginning of flushing, valves in the DEP system feed transfer piping shall be aligned to divert flush water to the low point drain vessel. [Sections 2.6.2, 2.7.2, ICD-30] (Table 2-2, E.1)

Basis Discussion: The amount of flush water sent to the LAW CRVs is minimized through the inclusion of flow and density monitoring equipment in the DEP system feed transfer piping design.

Verification: Verification is expected to be achieved through the following:

Verif. Method	Verif. By	Plan	Notes/Comments
R	**ENG**	Review the feed piping design to verify that total flow, total volume, and density monitoring equipment is provided on the DEP system feed transfer piping to the LAW Facility.	

Verif. Method	Verif. By	Plan	Notes/Comments
T	SU/ COM	Perform a test to verify that valves in the DEP system feed transfer piping to the LAW Facility divert flush water to the low point drain vessel upon detection of the end of feed transfer and the beginning of flushing.	

3.15.1.2.6 Feed Piping Radiation Monitoring

Requirement: The design of the DEP system feed transfer piping to the LAW Facility shall include a radiation monitor. The batch transfer of waste feed shall be interlocked such that transfers are stopped upon detection of radiation levels that exceed the limits for the LAW Facility. [Section 2.7.2, ICD-30] (Table 2-2, E.1)

Basis Discussion: Use of a radiation monitor within the transfer line allows the transfer of waste feed to be stopped if the measured exposure exceeds limits for the LAW Facility. [ALARA]

Verification: Verification is expected to be achieved through the following:

Verif. Method	Verif. By	Plan	Notes/Comments
R	ENG	Review the feed transfer piping design to verify that radiation monitors are included in the design.	
T	SU/ COM	Perform a test to verify that batch transfers of the TOC waste feed are stopped upon detection of radiation levels that exceed the limits for the LAW Facility.	

3.15.1.2.7 Feed Transfer Control System Sequencing

Requirement: The control system for feed to the LAW Facility shall be sequenced to first transfer available concentrated effluent from the DEP system, followed by a transfer of feed from the TOC, with the feed pushed into the receipt vessels by flush water from the TOC. [Sections 6, 6.1.2, BOD] (Table 2-2, A.2)

Basis Discussion: The transfer line piping could contain solutions with high concentration of chlorine ions that are not aligned with the design limits for the piping material. In order to mitigate the potential for corrosion caused by the transfer of the concentrate process stream, the design needs to include provisions for the dilution and flushing of the transfer system.

Verification: Verification is expected to be achieved through the following:

Verif. Method	Verif. By	Plan	Notes/Comments
R	ENG	Review the design of the transfer system of feed to the LAW Facility to verify it is designed to first transfer available concentrated effluent from the DEP system, followed by a transfer of feed from the TOC, with the feed pushed into the receipt vessels by flush water from the TOC.	

3.15.1.3 ICD-31 Monitoring and Controls Requirements

3.15.1.3.1 Evaporator Concentrate/Feed Transfer Leak Detection Interlock

Requirement: A DEP system control permissive/shutdown signal (interlock) shall be provided to shutdown the transfer of evaporator concentrate/feed to Tank Farms if a leak is detected by WTP. [Section 1.2, ICD-31] [Section 7.1, ORD] (Table 2-2, E.1)

Basis Discussion: The interlock signals from the contractors required for the interface connect to the interface termination box(es) meeting NEMA 4 standards. Interface termination box(es) are provided and maintained by the TOC. If a leak is detected in the Tank Farms portion of the transfer pipe, the loss of permissive interlock (see requirement below) ensures the transfer process is shutdown to a fail-safe state. [ALARA]

Verification: Verification is expected to be achieved through the following:

Verif. Method	Verif. By	Plan	Notes/Comments
R	**ENG**	Review the design to verify that an interlock exists to shutdown the transfer of evaporator concentrate/feed to Tank Farms if a leak is detected by WTP.	
T	**SU/ COM**	Perform a test to verify that a DEP system permissive/shutdown signal shuts down transfer of evaporator concentrate/feed to Tank Farms in the event of leak detection by WTP.	

3.15.1.3.2 Evaporator Concentrate/Feed Transfer Loss of Permissive Interlock

Requirement: If the permissive/shutdown signal (interlock) from the DEP system or from Tank Farms is lost during the transfer of evaporator concentrate/feed to Tank Farms, a transfer shutdown process shall initiate to a fail-safe state. [Sections 1.2, 2.1.2, ICD-31] [Section 7.1, ORD] (Table 2-2, E.1)

Basis Discussion: Typical inputs to the interlock signal may include leak detection, vessel level, valve alignment, transfer timers, and ventilation signals. [ALARA]

Verification: Verification is expected to be achieved through the following:

Verif. Method	Verif. By	Plan	Notes/Comments
R	**ENG**	Review the design to verify that if the permissive/shutdown signal from the WTP Contractor or from the TOC is lost during the transfer of evaporator concentrate/feed to Tank Farms, the transfer shutdown process is initiated to a fail-safe state.	
T	**SU/ COM**	Perform a test to verify that the transfer process is shutdown to a fail-safe state when the permissive/shutdown signal is lost from WTP or from Tank Farms during the transfer of evaporator concentrate/feed to Tank Farms.	

3.15.1.3.3 Evaporator Concentrate/Feed Transfer Monitoring Information

Requirement: The DEP system shall provide monitoring information for the evaporator concentrate/feed transfer line and effluent tank system to incorporate into the Tank Farms Monitoring and Control System. [Sections 1.2, 2.1.2, ICD-31] (Table 2-2, E.1)

Basis Discussion: This is a data link allowing Tank Farms to see WTP process data while operating and during transfer. [ALARA]

Verification: Verification is expected to be achieved through the following:

Verif. Method	Verif. By	Plan	Notes/Comments
R	**ENG**	Review the design to verify that monitoring information of the evaporator concentrate/feed transfer line and effluent tank systems is provided for incorporation in Tank Farms Monitoring and Control System.	
T	**SU/ COM**	Perform a test to verify that monitoring information for the evaporator concentrate/feed return line to Tank Farms is provided to the Tank Farms Monitoring and Control System.	

3.15.1.3.4 Evaporator Concentrate/Feed Transfer Volume Balances

Requirement: The DEP system shall have the capability to measure the total volume of DFLAW concentrated effluent, chemical additions, and flush water transferred during transfers of evaporator concentrate/feed to Tank Farms. All individual volumes of effluent and additions used in the transfer shall be measured with an accuracy of +/- 10%. [Sections 1.2, 2.3, 2.7, ICD-31] [Section 7.1, ORD] (Table 2-2, E.1)

Basis Discussion: Per ICD-31, the volume of concentrated effluent and flush water received is to be documented and differences reconciled with the transfer volumes recorded by Tank Farms.

Verification: Verification is expected to be achieved through the following:

Verif. Method	Verif. By	Plan	Notes/Comments
R	**ENG**	Review the design to verify the DEP system has the capability to measure the total volume of concentrated effluent, chemical additions, and flush water during evaporator concentrate/feed transfers to Tank Farms.	

3.15.1.4 ICD-06 Monitoring and Controls Requirements

3.15.1.4.1 Dilute Effluent Transfer Stop Control

Requirement: The DEP system underground dilute effluent transfer system shall have provisions to stop the transfer of dilute effluent to LERF/ETF upon an alarm of either the leak detection system on the WTP portion of the LERF/ETF transfer line or an alarm on the LERF/ETF leak detection or control system. [Sections 1.2, 2.1.2, 2.1.2.1, ICD-06] [Sections 7.1, 18, ORD] (Table 2-2, E.1)

Basis Discussion: LERF/ETF also has the ability to terminate transfers from the WTP. [ALARA]

Verification: Verification is expected to be achieved through the following:

Verif. Method	Verif. By	Plan	Notes/Comments
R	**ENG**	Review the design to verify that appropriate interlocks are in place to terminate dilute effluent transfers in the event of leak detection in either the WTP or LERF/ETF portions of the transfer line.	
R	**ENG**	Review the design to verify that LERF/ETF has the ability to terminate dilute effluent transfers from the LERF/ETF facility.	
T	**SU/ COM**	Perform a test to verify the stop control function as intended upon an alarm of either the leak detection system on the WTP portion of the LERF/ETF transfer line or an alarm on the LERF/ETF leak detection or control system.	

3.15.1.4.2 Dilute Effluent Transfer Monitoring Information

Requirement: Under DFLAW operations, the DEP system shall provide real-time monitoring of the dilute effluent flow rate, effluent radiation, pH, and conductivity during transfers to LERF/ETF. This information shall be transmitted to the LERF Instrument Building (242AL-71) over a dedicated line for monitoring at a minimum frequency of 15 seconds. For DFLAW process operations, the data, controls and monitoring interface requirements shall be identical to those determined for full WTP operation. [Sections 2.1.2, 2.1.2.1, ICD-06] [Section 7.1, ORD] (Table 2-2, E.1)

Basis Discussion: This is a data link allowing LERF/ETF to see WTP process data during transfer.

Verification: Verification is expected to be achieved through the following:

Verif. Method	Verif. By	Plan	Notes/Comments
R	**ENG**	Review the design to verify that flow rate, radiation, pH, and conductivity monitoring is provided on the dilute effluent transfer line to LERF/ETF.	
R	**ENG**	Review the design to verify that monitoring information can be transmitted to LERF Instrument Building (242AL-71) over a dedicated line at the required minimum frequency and that interface requirements for DFLAW operations are consistent with those for full WTP operation.	
T	**SU/COM**	Perform a test to verify that relevant, real-time effluent monitoring information (including dilute effluent flow rate, radiation, pH, and conductivity) is provided at the required frequency over a dedicated line to the LERF Instrument Building (242AL-71).	

3.15.1.4.3 Infrastructure to Support Dilute Effluent Transfer Monitoring

Requirement: Fiber optic cable and equipment shall be provided and connected for the transmittal of data signals to the interface point with LERF/ETF, as shown as Node 18 on the *Interface Control Drawing*, 24590-WTP-B2-C12T-00001. Secure telecommunications lines between the interface point and EMF shall be provided to prevent electronic access to the data signals and the facilities by others. [Sections 1.2, 2.1, 2.1.1, 2.1.2, ICD-06]

Basis Discussion: WTP and Tank Farms install their choice of hardware to provide the necessary communications capability. The necessary connections are made at the interface point.

Verification: Verification is expected to be achieved through the following:

Verif. Method	Verif. By	Plan	Notes/Comments
R	**ENG**	Review the design to verify that fiber optic cable and equipment are provided to the interface point for the transmittal of data signals.	
R	**ENG**	Review the design to verify secure telecommunication lines are provided between the EMF and interface point.	
T	**SU/COM**	Perform a test to verify that secure data signals from the EMF are received at the interface point for LERF/ETF-related transfers.	

3.15.2 Nuclear Safety, ALARA, Environmental, and Other Regulatory Requirements

None.

3.15.3 System Interface Requirements

None.

3.15.4 Other Technical, Specialty, Operations, and Maintenance Requirements

None.

3.16 Relevant Codes and Standards (for System Requirements)

3.16.1 Codes of Records

Table 3-5 identifies relevant external codes and standards applicable to the EMF and DEP, DVP, C1V, and ACV system designs. Use of the *Engineering, Procurement, and Construction (EPC) Code of Record*, 24590-WTP-COR-MGT-15-00001 is typically invoked in the design process through the documents identified in Section 3.16.2. Beyond inclusion here, no attempt is made in this document to extract individual design requirements from the Code of Record for allocation to SSCs.

In some cases, the expected means of verification may be established on the basis of tests or other criteria required by the codes and standards. This does not necessarily include verification or testing more appropriately defined in the procurement of individual sub-systems or components, or verification or testing that is a routine activity defined by specifications and/or procedures used by construction and startup.

Table 3-5 EMF Applicable Codes & Standards

Implementing Codes and Standards: [24590-WTP-COR-MGT-15-00001, Rev. 1, Engineering, Procurement, and Construction (EPC) Code of Record]
• 10 CFR 835, *Occupational Radiation Protection*
• 10 CFR 851, *Worker Safety and Health Program*
• 40 CFR 52, *Approval and Promulgation of Implementation Plans*
• 40 CFR 60, *Standards of Performance for New Stationary Sources*
• ANSI/AMCA 210, *Laboratory Methods of Testing Fans for Certified Aerodynamic Performance Rating*
• ANSI/API STD 2000-1998, *Venting Atmospheric and Low-Pressure Storage Tanks, Non-Refrigerated and Refrigerated*
• ANSI/ASHRAE Standard 15-1994, *Safety Code for Mechanical Refrigeration*
• ANSI/UL 142, *Steel Aboveground Tanks for Flammable and Combustible Liquids*
• API STD 520, *Sizing, Selection, and Installation of Pressure-Relieving Devices in Refineries*
• API STD 521, *Pressure-relieving and Depressuring Systems*
• API STD 620, *Design and Construction of Large, Welded, Low-Pressure Storage Tanks*
• API STD 650, *Welded Steel Tanks for Oil Storage*
• ASCE 7-98, *Minimum Design Loads for Buildings and Other Structures*
• ASME B30.11, *Monorails and Underhung Cranes*
• ASME B30.16, *Overhead Hoists (Underhung)*
• ASME B30.2, *Overhead and Gantry Cranes (Top Running Bridge, Single or Multiple Girder, Top Running Trolley Hoist)*
• ASME B31.1, *Power Piping*
• ASME B31.3-1996, *Process Piping Guide* (as tailored in Appendix C of the SRD)
• ASME B31.9, *Building Services Piping*
• ASME B36.19M, *Stainless Steel Pipe*
• ASME B73.1-2001, *Specification for Horizontal End Suction Centrifugal Pumps for Chemical Process*
• ASME Section II, *Boiler and Pressure Vessel Code, Materials*
• ASME Section V, *Boiler and Pressure Vessel Code, Nondestructive Examination*
• ASME Section VIII Divisions 1 and 2, *Boiler and Pressure Vessel Code, Rules for Construction of Pressure Vessels*
• ASME Section IX, *Boiler and Pressure Vessel Code, Welding and Brazing Qualifications*
• ASME NOG-1-2002, *Rules for Construction of Overhead and Gantry Cranes (Top Running Bridge, Multiple Girder)*
• ASTM E84, *Standard Test Method for Surface Burning Characteristics of Building Materials*
• ASTM E648, *Standard Test Method for Critical Radiant Flux of Floor-Covering Systems Using a Radiant Heat Energy Source*
• ASTM E814, *Standard Test Method for Fire Tests of Through-Penetration Fire Stops*
• AWS D1.1/D1.1M, *Structural Welding Code – Steel*
• AWS D1.6, *Structural Welding Code – Stainless Steel*

Implementing Codes and Standards: [24590-WTP-COR-MGT-15-00001, Rev. 1, Engineering, Procurement, and Construction (EPC) Code of Record]
• AWWA D100, *Welded Carbon Steel Tanks for Water Storage*
• CMAA 70, *Specifications for Top Running Bridge and Gantry Type Multiple Girder Electric Overhead Traveling Cranes*
• DOE-STD-1020-94 (Change 1 1996), *Natural Phenomena Hazards Design and Evaluation Criteria for Department of Energy Facilities*
• DOE-STD-1066-97, *Fire Protection Design Criteria* (as tailored in Appendix C of the SRD)
• IBC-2000, *International Building Code* (IBC)
• IEEE 485-1997, *Recommended Practice for Sizing Lead-Acid Batteries for Stationary Applications*
• IEEE 497-2002, *Criteria for Accident Monitoring Instrumentation for Nuclear Power Generating Stations* (as tailored in Appendix C of the SRD)
• IEEE 1023-1988, *IEEE Guide for the Application of Human Factors Engineering to Systems, Equipment, and Facilities of Nuclear Power Generating Stations and Other Nuclear Facilities*
• IEEE 1050-1996, *Guide for Instrumentation and Control Equipment Grounding in Generating Stations*
• IEEE 1187-2002, *Recommended Practice for Installation Design and Installation of Valve-Regulated Lead-Acid Storage Batteries for Stationary Applications*
• IESNA/ANSI RP-1, *Recommended Practice for Office Lighting*
• IESNA/ANSI RP-7, *Recommended Practice for Lighting Industrial Facilities*
• IESNA/ANSI RP-8, *Roadway Lighting*
• IESNA RP-16, *Nomenclature and Definitions for Illuminating Engineering*
• NFPA 10-1998, *Standard for Portable Fire Extinguishers*
• NFPA 13-1999, *Standard for the Installation of Sprinkler Systems*
• NFPA 69-2002, *Standard on Explosion Prevention Systems*
• NFPA 70-1999, *National Electrical Code (NEC)*
• NFPA 72-2002 and -2013, *National Fire Alarm and Signaling Code*
• NFPA 80-1999, *Standard for Fire Doors and Fire Windows*
• NFPA 80A-2001, *Recommended Practice for Protection of Buildings from Exterior Fire Exposures*
• NFPA 90A-1999, *Standard for the Installation of Air-Conditioning and Ventilating Systems*
• NFPA 101-2000, *Life Safety Code*
• NFPA 780-1997, *Standard for the Installation of Lighting Protection Systems*
• NFPA 801-2003, *Standard for Fire Protection for Facilities Handling Radioactive Materials*
• UBC-1997, *Uniform Building Code* (UBC)
• UL 1581, *Standard for Electrical Wires, Cables, and Flexible Cords*
• UMC, *Uniform Mechanical Code* (UMC)
• WAC 173-303, *Washington Administrative Code - Dangerous Waste Regulations*
• WAC 246-247, *Radiation Protection—Air Emissions*
• WAC 246-290, *Washington Administrative Code - Group A Public Water Supplies*

3.16.2 WTP Standards, Design Criteria, and (General) Specifications

Table 3-6 identifies relevant discipline design criteria, guides, and general specifications applicable to the EMF and associated systems. Use of these documents to develop the detailed design of SSCs is governed by engineering procedures. They majority or requirements within these documents are derived from external codes and standards or are specified methods and approaches to achieve standardization and consistency of design. Beyond inclusion here, no attempt is made in this document to extract individual design requirements from these documents for tracing and verification, or to define how direction provided by these documents is applicable and allocated (or not) to individual SSCs.

Table 3-6 WTP Design Criteria, Guides, and General Specifications Applicable to EMF

Document Number	Title
Design Criteria Documents	
24590-WTP-DC-AR-01-001	*Architectural Design Criteria*
24590-WTP-DC-C-01-001	*Civil Design Criteria*
24590-WTP-DC-E-01-001	*Electrical Design Criteria*
24590-WTP-DC-E-09-001	*Design Criteria for Electrical Equipment Installations*
24590-WTP-DC-M-06-001	*Mechanical Systems Design Criteria*
24590-WTP-DC-ST-01-001	*Structural Design Criteria*
24590-WTP-DC-ST-04-001	*Seismic Analysis and Design Criteria*
Design Guides	
24590-WTP-GPG-CSA-001	*Interior Room, Corridor, Door, and Window Numbering*
24590-WTP-GPG-CSA-0007	*Coordination of WTP Steel Design with Steel Suppliers*
24590-WTP-GPG-E-0006	*Electrical Equipment Installations Working and Dedicated Space Evaluation*
24590-WTP-GPG-ENG-004	*Pipe Stress, Pipe Layout and Support Spacing*
24590-WTP-GPG-ENG-005	*Engineering Design Guide for Pipe Support*
24590-WTP-GPG-ENG-009	*Reliability, Availability, Maintainability, and Inspectability (RAMI)*
24590-WTP-GPG-ENG-029	*Seismic Category III/IV Cable Tray and Conduit Support Design*
24590-WTP-GPG-ENG-034	*Automation Work Process for Pipe Stress Analysis and Support Design*
24590-WTP-GPG-ENG-039	*Quality Designation & Grading*
24590-WTP-GPG-ENG-078	*System and Facility Descriptions*
24590-WTP-GPG-ENG-0099	*Design Verification of Plant Design Deliverables*
24590-WTP-GPG-ENG-0105	*Design Guide for Stack Discharge Monitoring (SDJ) System (Rad and Non-Rad)*
24590-WTP-GPG-ENG-0144	*Piping Interface with Flexible Equipment-Stress Analysis Design Guide*
24590-WTP-GPG-ENG-0146	*Piping Coating System Selection Guide*
24590-WTP-GPG-ENG-0150	*Plant Design/Mechanical Systems Equipment Interfaces: Terminal End Equipment*
24590-WTP-GPG-ENG-0169	*Engineering Flooding Calculations*
24590-WTP-GPG-J-005	*Control Systems Interfaces*
24590-WTP-GPG-J-014	*Design Guide: Control Systems Design Process Guide*
24590-WTP-GPG-J-016	*Control Valve Sizing*
24590-WTP-GPG-J-017	*WTP Seismic Category Application to C&I Systems*

Document Number	Title
24590-WTP-GPG-M-009	*Jet Pumps (Ejectors) For Vacuum Generation*
24590-WTP-GPG-M-012	*Pump Net Positive Suction Head*
24590-WTP-GPG-M-013	*Plant Wash System Design*
24590-WTP-GPG-M-019	*Vessel Sizing*
24590-WTP-GPG-M-021	*Thermal Insulation*
24590-WTP-GPG-M-022	*Liquid And Vapor Line Sizing By Formula*
24590-WTP-GPG-M-027	*Recommended Slopes For Piping Systems*
24590-WTP-GPG-M-028	*Vent, Drain, And Root Valve Sizing And Selection For Piping Systems*
24590-WTP-GPG-M-030	*P&ID Development*
24590-WTP-GPG-M-032	*Vessel Overflow And Gravity Line Sizing*
24590-WTP-GPG-M-033	*Fire Water Floor Drain System*
24590-WTP-GPG-M-034	*Sizing Safety Relief Devices And Relief System Design*
24590-WTP-GPG-M-042	*Material Requisition Process*
24590-WTP-GPG-M-047	*Preparation Of Corrosion Evaluations*
24590-WTP-GPG-M-048	*Maintenance of WTP Heating, Ventilation, Air Conditioning Code Compliance Matrices*
24590-WTP-GPG-M-050	*Pressure Vessel And Heat Exchanger Design*
24590-WTP-GPG-M-052	*Specifying Design Cycles for Equipment and Piping*
24590-WTP-GPG-M-0059	*Avoiding Chemical Line Plugging - Plant Design Considerations*
24590-WTP-GPG-M-0067	*Mechanical Systems Engineering Documentation of ASME B31.3 Unlisted Components*
24590-WTP-GPG-MGT-0026	*Design & Operating Margin Terms*
24590-WTP-GPG-PE-0001	*Assigning Process Stream Numbers*
24590-WTP-GPG-PL-002	*Plant Design Material Control Guide*
24590-WTP-GPG-PR-004	*Preparation of Process Corrosion Data Sheets*
24590-WTP-GPG-SRAD-001	*Design Guide for ALARA*
Specifications	
24590-BOF-3PS-AELH-T0001	*Engineering Specification for DFLAW Effluent Management Facility Liquid Sampling Station*
24590-BOF-3PS-AKBS-T0001	*Engineering Specification for Pre-Engineered Metal Buildings Section (13122)*
24590-BOF-3PS-C000-T0001	*Engineering Specification for Material Testing Services*
24590-BOF-3PS-C000-T0002	*Engineering Specification for Excavation and Backfill of Underground Radioactive Waste Transfer Lines*
24590-BOF-3PS-CE00-T0001	*Technical Specification for Site Work*
24590-BOF-3PS-CE01-T0001	*Engineering Specification for Excavation and Backfill*
24590-BOF-3PS-CE01-T0002	*Engineering Specification for Installation of Drilled Shafts and Cast-in-Place Caissons*
24590-BOF-3PS-CM01-T0001	*Engineering Specification for Monitoring of Buildings and Shored Excavations*
24590-BOF-3PS-CP00-T0001	*Specification for Shoring of Deep Excavations*
24590-BOF-3PS-CY11-T0001	*Engineering Specification for Fence and Gates*
24590-BOF-3PS-EKL1-T0001	*Engineering Specification for EMF Pre-Fabricated Electrical Powerhouse*

Document Number	Title
24590-BOF-3PS-JF04-T0001	*Restriction Orifices*
24590-BOF-3PS-JV09-T0001	*Engineering Specification for EMF Non-Safety Actuated On/Off Ball Valves*
24590-BOF-3PS-JV14-T0001	*Engineering Specification for Effluent Management Facility (EMF) Pressure Relief Valves*
24590-BOF-3PS-MACS-T0001	*Engineering Specification for DVP Vessel Vent Centrifugal Exhauster*
24590-BOF-3PS-MACS-T0002	*Engineering Specification for DFLAW Effluent Management Facility ACV System Single Stage High Integrity Centrifugal Fans and Blowers (AG-1)*
24590-BOF-3PS-MAH0-T0001	*Engineering Specification for Air Handling Units*
24590-BOF-3PS-MEE0-T0002	*Engineering Specification for DVP HEPA Filter Preheater*
24590-BOF-3PS-MEP0-T0001	*Engineering Specification for DFLAW Effluent Management Facility Plate and Frame Heat Exchangers*
24590-BOF-3PS-MEW-T0001	*Engineering Specification for DFLAW Effluent Management Facility Process System (DEP) Evaporator System*
24590-BOF-3PS-MEVV-T0001	*Engineering Specification for DEP Evaporator Separator Vessel, DEP Evaporator Reboiler, and DEP Evaporator Primary Condenser*
24590-BOF-3PS-MJKH-T0001	*Engineering Specification for DFLAW Effluent Management Facility Maintenance Monorail Hoists*
24590-BOF-3PS-MKH0-T0001	*Engineering Specification for Effluent Management Facility High Efficiency Particulate Air (HEPA) Filter Housings*
24590-BOF-3PS-MKH0-T0002	*Engineering Specification for Effluent Management Facility High Efficiency Particulate Air (HEPA) Filter*
24590-BOF-3PS-MLF0-T0001	*Engineering Specification for DFLAW Effluent Management Facility (EMF) Cartridge Filters*
24590-BOF-3PS-MLF0-T0002	*Engineering Specification for DFLAW EMF Evaporator Feed Pre-Filter*
24590-BOF-3PS-MPC0-T0001	*Engineering Specification for EMF Centrifugal Pumps*
24590-BOF-3PS-MPPD-T0001	*Engineering Specification for Air-Operated Diaphragm Sump Pump*
24590-BOF-3PS-MPPM-T0001	*Engineering Specification for DFLAW Effluent Management Facility (EMF) Positive Displacement Pumps, Skid, and Sample Pumps*
24590-BOF-3PS-MPV0-T0001	*Engineering Specification for EMF DFLAW Low Point Drain Vessel Discharge Pumps*
24590-BOF-3PS-MPVS-T0001	*Engineering Specification for Submersible Centrifugal Sump Pumps*
24590-BOF-3PS-MS00-T0002	*Engineering Specification for Steam Condensate Collection Skid*
24590-BOF-3PS-MVSC-T0002	*Engineering Specification for DFLAW Effluent Management Facility Atmospheric Process Vessels*
24590-BOF-3PS-MVSC-T0003	*Engineering Specification for DFLAW EMF Lag Storage and Overhead Sampling Vessels*
24590-BOF-3PS-PY00-T0001	*Engineering Specification for DFLAW Effluent Management Facility Leak Detection Boxes*
24590-BOF-3PS-PY02-T0001	*Engineering Specification for Duplex Strainer*
24590-BOF-3PS-PZ41-T0006	*Engineering Specification for Effluent Management Facility (EMF) Suppression Systems*
24590-WTP-3PS-ADDS-T0001	*Engineering Specification for Steel Doors and Frames 08110*
24590-WTP-3PS-ADDZ-T0001	*Engineering Specification for Access Doors and Frames 08311*

Document Number	Title
24590-WTP-3PS-ADHD-T0001	*Engineering Specification for Door Hardware 08711*
24590-WTP-3PS-ADRC-T0001	*Engineering Specification for Vertical and Horizontal Coiling Doors 08331*
24590-WTP-3PS-AEDL-T0001	*Engineering Specification for Loading Dock Equipment 11160*
24590-WTP-3PS-AFBR-T0001	*Engineering Specification for Resilient Wall Base and Accessories 09653*
24590-WTP-3PS-AFGB-T0001	*Engineering Specification for Gypsum Board Assemblies 09260*
24590-WTP-3PS-AFGB-T0005	*Engineering Specification for Quality requirements for Procurement of Fire and Pressure Rated Safety Equipment, Assemblies and Components*
24590-WTP-3PS-AFGW-T0001	*Engineering Specification for Gypsum Board Shaft-Wall Assemblies 09265*
24590-WTP-3PS-AFPP-T0001	*Engineering Specification for Painting (Professional Line Products) 09912*
24590-WTP-3PS-AFPS-T0001	*Engineering Specification for Shop Applied Special Protective Coatings for Steel Items and Equipment*
24590-WTP-3PS-AFPS-T0002	*Engineering Specification for Special Protective Coating Limited-Combustible Testing Protocol*
24590-WTP-3PS-AFPS-T0003	*Engineering Specification for Field Applied Special Protective Coatings for Steel Items and Equipment*
24590-WTP-3PS-AFPS-T0004	*Engineering Specification for Field Applied Special Protective Coatings for Concrete Surfaces and Gypsum Board Walls*
24590-WTP-3PS-AFPS-T0006	*Engineering Specification for Field Applied Special Protective Coatings for Secondary Containment Areas*
24590-WTP-3PS-AFPS-T0007	*Engineering Specification for Cold Galvanizing Field Tough-Up/Repair of Steel or Galvanized Steel Items and Equipment*
24590-BOF-3PS-AKBS-T0001	*Engineering Specification for Pre-Engineering Metal Buildings Section 13122*
24590-WTP-3PS-ANEJ-T0001	*Engineering Specification for Architectural Joint Systems 05811*
24590-WTP-3PS-ANFC-T0001	*Engineering Specification for Cold-Formed Metal Framing 05400*
24590-WTP-3PS-ATFR-T0001	*Engineering Specification for Thin Film Intumescent Fireproofing 07811*
24590-WTP-3PS-ATFR-T0002	*Engineering Specification for Cementitious Fireproofing 07831*
24590-WTP-3PS-ATFS-T0001	*Engineering Specification for Through-Penetration Firestop System 07841*
24590-WTP-3PS-ATFS-T0002	*Engineering Specification for Fire Resistive Joint Systems 07842*
24590-WTP-3PS-ATIB-T0001	*Engineering Specification for Building Insulation 07210*
24590-WTP-3PS-ATJS-T0001	*Engineering Specification for Joint Sealants 07901*
24590-WTP-3PS-ATPR-T0001	*Engineering Specification for Metal Roof Panels 07411*
24590-WTP-3PS-ATPW-T0002	*Engineering Specification for Factory Foam Insulated Metal Wall Panel System 07413*
24590-WTP-3PS-ATRC-T0001	*Engineering Specification for Thermoplastic Membrane Roofing 07540*
24590-WTP-3PS-ATRY-T0001	*Engineering Specification for Protective Canopies 10530*
24590-WTP-3PS-ATRZ-T0001	*Engineering Specification for Roof Accessories 07720*
24590-WTP-3PS-ATTF-T0001	*Engineering Specification for Sheet Metal Flashing and Trim 07620*
24590-WTP-3PS-ATWF-T0001	*Specification for Bituminous Dampproofing 07115*
24590-WTP-3PS-AWCR-T0001	*Specification for Rough Carpentry 06100*
24590-WTP-3PS-AYFP-T0001	*Engineering Specification for Fire Protection Specialties 10520*
24590-WTP-3PS-AYSS-T0001	*Engineering Specification for Architectural Signage 10431*

Document Number	Title
24590-WTP-3PS-AYVL-T0001	*Engineering Specification for Louvers and Vents 10200*
24590-WTP-3PS-AYWP-T0001	*Engineering Specification for Impact Resistant Wall Protection 10265*
24590-WTP-3PS-D000-T0001	*Engineering Specification for Concrete Work*
24590-WTP-3PS-DB01-T0001	*Engineering Specification for Furnishing and Delivering Ready-Mix Concrete*
24590-WTP-3PS-DB01-T0002	*Engineering Specification for Furnishing and Delivering Ready Mix Lightweight Concrete*
24590-WTP-3PS-DD00-T0001	*Engineering Specification for Purchase of Standard and Non-Standard Embedded Steel Items*
24590-WTP-3PS-DG00-T0001	*Engineering Specification for Furnishing of Reinforcing Steel*
24590-WTP-3PS-E000-T0001	*Engineering Specification for Electrical Bulk Materials*
24590-WTP-3PS-E00X-T0001	*Engineering Specifications for Electrical Equipment Installation*
24590-WTP-3PS-E00X-T0003	*Engineering Specification for Cable Terminations*
24590-WTP-3PS-E00X-T0004	*Engineering Specification for Installation of Cables*
24590-WTP-3PS-E00X-T0005	*Engineering Specification for Electrical Raceway and Cable Identification*
24590-WTP-3PS-E00X-T0007	*Engineering Specification for Electrical Raceway System Installation*
24590-WTP-3PS-EF00-T0001	*Engineering Specification for Plant Communications Equipment*
24590-WTP-3PS-EH00-T0002	*Engineering Specification for Heat Trace*
24590-WTP-3PS-EKP0-T0001	*Engineering Specification for Electrical Requirements for Packaged Equipment*
24590-WTP-3PS-F000-T0002	*Engineering Specification for Fastener Torque and Tensioning*
24590-WTP-3PS-FA01-T0001	*Engineering Specification for Furnishing of Anchor Bolts (RODS)*
24590-WTP-3PS-FA02-T0001	*Engineering Specification for Purchase of Post Installed Concrete Anchors for Non-Important to Safety (Non-ITS) Applications*
24590-WTP-3PS-FA02-T0003	*Engineering Specification for Design of Posted Installed Concrete Anchors for CM Applications*
24590-WTP-3PS-FA02-T0004	*Engineering Specification for Installation and Testing of Post Installed Concrete Anchors and Drilling/Coring of Concrete*
24590-WTP-3PS-FB01-T0001	*Engineering Specification for Structural Design Loads for Seismic Category III & IV Equipment and Tanks*
24590-WTP-3PS-G000-T0002	*Engineering Specification for Positive Material Identification (PMI) for Shop Fabrication*
24590-WTP-3PS-G000-T0003	*Engineering Specification for Packaging, Handling, and Storage requirements*
24590-WTP-3PS-G000-T0014	*Engineering Specification for Supplier Design Analysis*
24590-WTP-3PS-G000-T0045	*Engineering Specification for Supplier Design Analysis with Developed Software*
24590-WTP-3PS-JA03-T0002	*Engineering Specification for Radiological Stack Emissions Monitoring System*
24590-WTP-3PS-JA04-T0002	*Engineering Specification for Continuous In-Line Density, Mass Flow Instruments with Temperature Measurement*
24590-WTP-3PS-JD01-T0001	*Engineering Specification for Plant Wide Control Systems (Integrated Control Network)*
24590-WTP-3PS-JP01-T0001	*Engineering Specification for Process Gauges, Thermometers*
24590-WTP-3PS-JP02-T0001	*Engineering Specification for Radiation Tolerant Pressure Transmitter Gauge, Absolute, or Differential Pressure Measurements*

Document Number	Title
24590-WTP-3PS-JP02-T0002	*Engineering Specification for Radiation Tolerant Pressure Transmitter Gauge, Absolute, or Differential Pressure Measurements*
24590-WTP-3PS-JP02-T0003	*Engineering Specification for Transmitters for Gauge, Absolute, Differential Pressure, Level and Flow Measurement*
24590-WTP-3PS-JP02-T0004	*Engineering Specification for Transmitters for Gauge, Absolute, Differential Pressure, Level, and Flow Measurements*
24590-WTP-3PS-JQ00-T0004	*Engineering Specification for Management of Supplier Software*
24590-WTP-3PS-JQ05-T0001	*Engineering Specification for Fire Detection and Alarm Systems*
24590-WTP-3PS-JQ07-T0001	*Engineering Specification for Instrumentation for Packaged Systems*
24590-WTP-3PS-JQ08-T0001	*Engineering Specification for Construction and Installation of Controls and Instrumentation*
24590-WTP-3PS-JR00-T0008	*Engineering Specification for Radiation Monitors (Continuous Air Monitors)*
24590-WTP-3PS-JR00-T0010	*Engineering Specification for Process At-Line Gamma Monitor - ITS*
24590-WTP-3PS-JR00-T0011	*Engineering Specification for Radiation Monitors - ITS*
24590-WTP-3PS-JV01-T0001	*Engineering Specification for Control Valves*
24590-WTP-3PS-JV01-T0003	*Engineering Specification for Control Valves (QL)*
24590-WTP-3PS-JV09-T0001	*Engineering Specification for On/Off Instrument Valves - ITS*
24590-WTP-3PS-JV09-T0003	*Engineering Specification for Non-Safety Actuated On/Off Ball Valves*
24590-WTP-3PS-JXXE-T0002	*Engineering Specification for C&I Enclosures, Panels, Cabinets, and Racks*
24590-WTP-3PS-LVE-T0001	*Engineering Specification For Electrical and Instrumentation Jumper Cables*
24590-WTP-3PS-LVE-T0002	*Engineering Specification For Insulating Plates and Contacts*
24590-WTP-3PS-LVE-T0003	*Engineering Specification for Electrical and Instrumentation Jumper Connectors*
24590-WTP-3PS-LVE-T0006	*Engineering Specification for Electrical and Instrumentation Jumper Connectors*
24590-WTP-3PS-MACG-T0001	*Engineering Specification for HVAC Centrifugal Fans*
24590-WTP-3PS-MACS-T0003	*Engineering Specification For Mechanical Agitators*
24590-WTP-3PS-MAH0-T0001	*Engineering Specification for HVAC Air Handling Units*
24590-WTP-3PS-MAHC-T0001	*Engineering Specification for Fan Coil Units*
24590-WTP-3PS-MD00-T0001	*Engineering Specification for Heating Ventilation and Air Conditioning Systems Installation*
24590-WTP-3PS-MDD0-T0001	*Engineering Specification for HVAC Dampers*
24590-WTP-3PS-MDH0-T0001	*Engineering Specification for Heating, Ventilating and Air Conditioning System Seismic Category III and IV Ductwork (Q)*
24590-WTP-3PS-MDH0-T0002	*Engineering Specification for Heating, Ventilating and Air Conditioning System Seismic Category III and IV Ductwork (CM)*
24590-WTP-3PS-MDP0-T0001	*Engineering Specification for Remote Operated Dampers*
24590-WTP-3PS-MEE0-T0001	*Engineering Specification for Electric Heating Coil Units*
24590-WTP-3PS-MEHU-T0001	*Technical Specification for Unit Heaters*
24590-WTP-3PS-MEHX-T0001	*Engineering Specification for Package and Split System Air Conditioning Units*
24590-WTP-3PS-MEHX-T0002	*Engineering Specification for Package Air Conditioning Units and Split Systems*
24590-WTP-3PS-MEP0-T0001	*Engineering Specification for Plate and Frame Heat Exchangers*

Document Number	Title
24590-WTP-3PS-MES0-T0001	*Engineering Specification for Shell and Tube Heat Exchangers*
24590-WTP-3PS-MEVH-T0001	*Engineering Specification for HVAC Humidifiers*
24590-WTP-3PS-MKH0-T0001	*Engineering Specification for Safe Change HEPA Filter Housing*
24590-WTP-3PS-MKH0-T0002	*Engineering Specification for Nuclear Grade High Efficiency Particulate Air (HEPA) Filters (ASME AG-1 Section FK Filters)*
24590-WTP-3PS-MKH0-T0005	*Engineering Specification for Medium Efficiency Filters*
24590-WTP-3PS-MKH0-T0007	*Engineering Specification for Axial Flow High Efficiency Particulate Air (HEPA) Filter Housings*
24590-WTP-3PS-MKH0-T0009	*Engineering Specification for Standard Nuclear Grade High Efficiency Particulate Air (HEPA) Filters (for ASME AG-1 Compliant Filters)*
24590-WTP-3PS-MKH0-T0012	*Engineering Specification for Specification for Fire Screen Housings*
24590-WTP-3PS-MKH0-T0014	*High Efficiency Particulate Air (HEPA) Filter Test Specification*
24590-WTP-3PS-MPC0-T0002	*Engineering Specification For General Centrifugal Pumps To Meet Requirements Of ASME B73.1m-2001 And ASME B73.2m-2003 for Commercial (CM) Components*
24590-WTP-3PS-MPC0-T0007	*Non-ASME B73.1 Horizontal Centrifugal Pumps for Non-Quality Related Components*
24590-WTP-3PS-MPPM-T0001	*Engineering Specification for Positive Displacement Metering Pumps*
24590-WTP-3PS-MTF5-T0001	*Engineering Specification For Field-Erected Tanks Design and Fabrication*
24590-WTP-3PS-MTSS-T0001	*Engineering Specification for Tank Welding*
24590-WTP-3PS-MUMI-T0002	*Engineering Specification for Low Voltage Induction Motors*
24590-WTP-3PS-MV00-T0001	*Engineering Specification for Pressure Vessel Design And Fabrication*
24590-WTP-3PS-MVB2-T0001	*Engineering Specification for Welding of Pressure Vessels, Heat Exchangers And Boilers*
24590-WTP-3PS-NLLR-T0002	*Engineering Specification for Furnishing, Detailing, Fabrication, Delivery and Installation of Stainless Steel Liner Plates*
24590-WTP-3PS-NN00-T0001	*Engineering Specification for Thermal Insulation For Mechanical Systems*
24590-WTP-3PS-NWP0-T0001	*Engineering Specification for General Welding and NDE Requirements for Supplier Fabricated Piping*
24590-WTP-3PS-P000-T0001	*Engineering Specification for Technical Supply Conditions for Pipe, Fittings, and Flanges*
24590-WTP-3PS-PH01-T0002	*Engineering Specification for Installation of Pipe supports*
24590-WTP-3PS-PS02-T0003	*Engineering Specification for Shop Fabrication of Piping*
24590-WTP-3PS-PY00-T0001	*Engineering Specification for Wall/Floor-Boxes*
24590-WTP-3PS-SS00-T0001	*Engineering Specification for Welding of Structural Carbon Steel*
24590-WTP-3PS-SS00-T0002	*Engineering Specification for Welding of Structural Stainless Steel and Welding of Structural Carbon Steel to Structural Stainless Steel*
24590-WTP-3PS-SS00-T0005	*Engineering Specification for Thermite Welding of Rails*
24590-WTP-3PS-SS01-T0001	*Engineering Specification for Purchase of Miscellaneous Steel*
24590-WTP-3PS-SS01-T0002	*Engineering Specification for Purchase of Structural Steel*
24590-WTP-3PS-SS01-T0003	*Engineering Specification for Purchase of Commercial Structural Steel, Miscellaneous Steel, Steel Decking, and Fasteners*
24590-WTP-3PS-SS02-T0001	*Engineering Specification for Erection of Structural Steel*

Document Number	Title
24590-WTP-3PS-SS25-T0001	*Engineering Specification for Purchase of Steel Deck*
24590-WTP-3PS-SS25-T0002	*Engineering Specification for Purchase of Steel Roof Deck*
24590-WTP-3PS-SY00-T0001	*Engineering Specification for Purchase of Standard Struts, Fittings and Accessories*

4 System Description

This section summarizes design output information by describing the current design and the operational and maintenance aspects of the system. The information provided below does not contain design requirements and should not be used as design input. The description of the current design contained in this section may not fully align with design requirements. This is acceptable within the context of this section. Areas of misalignment are to be resolved through appropriate mechanisms and the FDD/SDD updated to reflect changes made to the design. Changes to the descriptive text will be made following the changes to the lower tiered engineering documents.

4.1 Configuration Information

Note: The process conditions that are described are normal operating parameters (unless otherwise noted) to provide the necessary context for description of the facility, systems, subsystems, and major components.

The primary function of the EMF is to house the DEP and DVP systems and their supporting utility systems, which allow for the treatment of radioactive, dangerous liquid effluent derived from secondary waste streams resulting from glass production in the LAW Facility. The sources of the secondary effluents that are sent to the EMF for treatment are the LAW and Lab RLD systems, the LAW LVP system, and the transfer line flushes and drains associated with the feed and secondary effluent transfers. The EMF will operate up to and during the commissioning of the PT and HLW Facilities. Once the HLW Facility and the PT Facility begin hot commissioning, the EMF will be placed into lay-up and maintained in the event that the PT Facility is unavailable.

The effluents from LAW Facility and Lab operations are collected in the EMF and blended together for evaporation, with the exception of the caustic scrubber effluent received from the LVP system. The EMF concentrates the blended effluent to reduce the total volume to be returned to the LAW LCP system. The caustic scrubber effluent is combined with the evaporator condensate and is sent to the LERF/ETF for disposal.

The DEP system includes the equipment necessary to concentrate the liquid effluent from the LAW Facility and Lab, as well as transfer line drains and flushes, via evaporation. Recycling some concentrated effluent causes build-up in the evaporator recycle loop until steady state conditions are achieved. This approach is consistent with the baseline design, in which LAW Facility effluent is recycled to the PT Facility treated LAW evaporator process system (TLP) evaporator.

Internal areas of the EMF are provided with conditioned air and ventilation capability by the EMF HVAC systems. The ACV system serves the process and utility areas of the EMF, while the C1V system serves the C1 areas that do not interface with the ACV system. The ACV system uses a cascading ventilation system that maintains airflow from areas of less potential for contamination to areas of greater potential for contamination to provide confinement of contamination at or near the source. Exhaust from the ACV system is monitored to ensure compliance with permit requirements.

4.1.1 Description of System, Subsystems, and Major Components

This section provides a summary level description of the EMF and DEP system major components.

4.1.1.1 EMF Facility Description

The EMF is comprised of four buildings. The LAW effluent process building (Building 25) houses the main DEP system equipment and is where the radiological liquid effluent is collected and processed. This single-story windowless structure consists of an enclosed high bay area on the west end of the building, an enclosed lower bay area on the east end of the building, outdoor holding vessel and chemical tank areas on the north side of the building, a covered truck unloading area on the east side of the building, and support areas on the south side of the building. The building foundation is cast-in-place reinforced concrete. The high bay area is surrounded by a 3 ft thick reinforced concrete wall up to a height of 40 ft, which then supports a system of metal panels over structural girts and framing that further extends to a height of 60 ft. The lower bay area is also surrounded by a 3 ft thick reinforced concrete wall, however this structure only extends up to a height of 8 ft 6 in. The remaining wall system extends to a height of 37 ft and consists of metal panels over structural girts and framing. The roofing system for these areas, as well as the cover for the truck bay, is a metal standing-seam roof installed over insulation and a thermal barrier that is fastened to a metal roof deck.

The LAW effluent drain tank building (Building 25A), located directly west of the LAW effluent process building, houses the low-point drain vessel that is used to support draining of the underground transfer lines and leak detection from the secondary side of the transfer lines. The lower basement of this structure is a concrete enclosure that extends down to a depth of −39 ft. The basemat and wall members are constructed of 5 ft thick reinforced concrete and the top slab consists of 2 ft 8 in. thick reinforced concrete. The upper level of this structure is a pre-engineered metal frame with exterior wall panels and an insulated metal roof that is supported by the top slab of the basement and an additional slab on grade. The metal frame of this level extends to a height of 35 ft 7 in. A concrete pipe chase is provided between the LAW effluent process building and the LAW effluent drain tank building to house process piping that runs between the two structures. The chase is used for radiation shielding only, since the piping is co-axial for secondary containment purposes. The chase sits on top of both the 2 ft 8 in. thick slab of the LAW effluent drain tank building and a separate 3 ft thick concrete slab located between the two process buildings. The portion of the chase that rests on top of the LAW effluent drain tank building slab, referred to as the pipe chase doghouse, has 8 ft high walls and a roof that are both 1 ft 8 in. thick. The other portion of the chase has 8 ft high walls and a roof that are both 1 ft 6 in. thick. These two sections are connected by an isolation joint.

The LAW effluent utility building (Building 26) houses the ACV system HEPA filters and fans, along with the various BOF utility system equipment. This single-story windowless structure is 28 ft tall and consists of insulated metal sandwich wall panels over structural girts and framing and an insulated metal roof. The building is supported by a 3 ft thick concrete foundation.

The LAW effluent electrical building (Building 27) houses most of the EMF electrical equipment, which includes the 480V secondary unit substation load center, 480V motor control centers, the uninterruptible power supply system, panelboards, transformers, and adjustable speed drives. This pre-fabricated building is raised 6 ft above grade and is supported by a 3 ft thick concrete foundation.

All buildings (inclusive of most SSCs) within the EMF are non-safety. The one exception is the pressure relief valve on the sodium hydroxide supply line from the truck unloading area to the chemical storage area (E-0107). This component, however, is covered in the scope of the SHR system and its relevant requirements can be found in 24590-WTP-3ZD-SHR-00001, *System Design Description for the WTP Process Reagent Systems*. The EMF exterior structural and architectural elements (walls, roof segments, doors) are constructed of noncombustible materials in accordance with applicable fire protection codes and standards contained in 24590-WTP-COR-MGT-15-00001, *Engineering, Procurement, and Construction (EPC) Code of Record.* The EMF is designed to ensure exposure to the maximally exposed offsite individual (non-acute) is ALARA.

4.1.1.1.1 Maintenance Platforms

EMF SSCs as defined in Sections 3.5.1.2.1 and 3.8.4.7 have a 40-year minimum design life, including the confinement function to minimize out-leakage into lower contamination areas for ventilation system components. All non-replaceable, non-maintainable permanent EMF plant equipment is designed for a 40-year service life, inclusive of maintenance. The EMF is also a hands-on only maintenance facility, meaning that maintenance personnel decontaminate and work on equipment by hand. The EMF facility and equipment designs include adequate space for maintenance activities. While the EMF provides adequate space for some decontamination activities, it is anticipated that the majority of decontamination work for EMF SSCs will be completed in the LAW Facility. Maintenance platforms are installed throughout the EMF to facilitate operator access to maintainable equipment.

4.1.1.1.1.1 LAW Effluent Drain Tank Building Platforms

Refer to:	24590-BOF-S1-25-00101	*LAW Effluent Drain Tank Building 25A Structural Steel Platform EDPB001C Plan Sections and Details*
	24590-BOF-S1-25-00102	*LAW Effluent Drain Tank Building 25A Structural Steel Platforms EDPB001A & EDPB001B Plans and Sections*

Three platforms are provided in the drain tank cell (ED-B001) of the LAW effluent drain tank building. Operators descend a stairwell from the drain tank maintenance room (ED-0102) to platforms EDPB001B and EDPB001A, located on the −22 ft 7¼ in. and −20 ft 9½ in. elevations, respectively. These platforms provide access to the top of DEP-VSL-00001 and allow for the remote operation of the overflow/drain plugs of the underground piping leak detection boxes. A ladder at the south side of platform EDPB001B provides access down to platform EDPB001C on the −32 ft 7½ in. elevation and to the drain tank cell floor. Platform EDPB001C provides structural support for DEP-PMP-00031 and adequate space to perform maintenance on the pump.

4.1.1.1.1.2 LAW Effluent Process Building Platforms

Refer to:	24590-BOF-S1-25-00003	*LAW Effluent Process Bldg. 25 Structural Steel Platform EP0103A Plan and Sections*
	24590-BOF-S1-25-00004	*LAW Effluent Process Bldg. 25 Structural Steel Platform EP0102A Plans*
	24590-BOF-S1-25-00005	*LAW Effluent Process Bldg. 25 Structural Steel Platform EP0106A Plans*
	24590-BOF-S1-25-00006	*LAW Effluent Process Bldg. 25 Structural Steel Platform EP0106C and EP0106B Plans*
	24590-BOF-S1-25-00010	*LAW Effluent Process Bldg. 25 Structural Steel Platform EP0103C Plans*
	24590-BOF-S1-25-00011	*LAW Effluent Process Bldg. 25 Structural Steel Platform EP0103B Plans*
	24590-BOF-S1-25-00012	*LAW Effluent Process Bldg. 25 Structural Steel Platform EP0102B Plans*
	24590-BOF-S1-25-00013	*LAW Effluent Process Bldg. 25 Structural Steel Platform EP0102B Plan and Sections*

Several platforms are provided in the east evaporator process area (E-0102), west evaporator process area (E-0103), and process condensate tank area (E-0106) of the LAW effluent process building. Platform EP0102B runs along the entire north wall of the east evaporator process area at the 14 ft 5 in. elevation and is accessible by both a staircase in the northeast corner of the room and a ladder in the northwest corner of the room. This structure

supports the process condensate filter (DEP-FILT-00002), a combination safety shower eye wash unit (DOW-SHR-00174), electrical equipment, and operator movement to platform EP0102A and to the west evaporator process area. Platform EP0102A, located in the southwest corner of E-0102 at the 20 ft elevation, is accessible via an ascending staircase from platform EP0102B or a ladder from the ground elevation. This structure supports the secondary steam generator (HPS-HX-00011) and provides the space necessary for operators to perform maintenance on the heat exchanger.

Platform EP0102B also provides a transition point through hollow metal doors to platform EP0103B, located along the entire north wall of the west evaporator process area and also at the 14 ft 5 in. elevation. This platform is also accessible from the ground elevation by a ladder situated in the northwest corner of the room. An additional ladder installed directly west of this ladder allows operators to access the 30 ft 7 in. elevation of platform EP0103B and platform EP0103A, located at the 40 ft 7 in. elevation. These two structures are limited to the northwest corner of the room. EP0103A structurally supports the evaporator feed pre-filter (DEP-FILT-00003) and provides the space necessary for operators to perform maintenance on the unit. The west evaporator process area also includes a separate maintenance platform, EP0103C, that is centrally located and not accessible from other maintenance platforms. Operators at the ground elevation ascend a ladder to the 19 ft 5 in. elevation of the structure, which supports the reboiler (DEP-RBLR-00001) and provides adequate space for maintenance activities on the unit. A separate ladder provides a route to the 29 ft 10 in. elevation of the structure, which supports the evaporator (DEP-EVAP-00001) and allows operators to access the evaporator manway. A final ladder provides access to the 43 ft 10 in. elevation of EP0103C, which includes the required space to perform maintenance on the mesh basket located at the top of DEP-EVAP-00001.

There are three structural steel platforms outdoors in the process condensate tank area (E-0106) that facilitate vessel access and support multiple commodities. Platform EP0106C, located on the west wall of the room at the 9 ft 5 in. elevation, is accessible from a staircase in the northwest corner of the room and provides support for the process condensate vessel area sump pump filter (DEP-FILT-00006). Operators can ascend a ladder to platform EP0106A on the 24 ft 4¾ in. elevation, installed directly above EP0106C. This structure supports the feed vessel area sump pump filter (DEP-FILT-00005) and allows operators to access the outer head of the overhead sampling vessels (DEP-VSL-00004A/B). Platform EP0106B, located in the center of the process condensate tank area at the 24 ft 1¾ in. elevation, provides a connection to the subcontractor maintenance platform of the process condensate lag storage vessels (DEP-VSL-00005A/B).

4.1.1.1.2 Maintenance Monorail Hoists

4.1.1.1.2.1 Low Point Drain Tank Ancillaries Hoist (25-HST-00001)

Refer to:	24590-WTP-M0D-25-00001	*24590-WTP-MJ-25-HST-00001 – BOF/EMF Monorails Maintenance Monorail Hoist*

The low point drain tank ancillaries hoist (25-HST-00001) is located at the 30 ft elevation of the drain tank maintenance area (ED-0102) and provides support for the maintenance of components of the low point drain vessel (DEP-VSL-00001). The operator can affix the lifting hook to equipment in the R5/R3 drain tank cell (ED-B001), extract the equipment to the above R3 area through a shield hatch, and position the component on the tank agitator/pump assembly stand for repairs. The unit is powered by 3-phase/60 Hz/460 V motors, one for the hoist (25-MTR-00001) and one for the trolley (25-MTR-00006), and has a lifting capacity of 5 tons.

4.1.1.1.2.2 Evaporator Hoist (25-HST-00002)

Refer to:	24590-WTP-M0D-25-00002	*24590-WTP-MJ-25-HST-00002 – BOF/EMF Monorails Maintenance Monorail Hoist*

The evaporator hoist (25-HST-00002) is located at the 55 ft 1½ in. elevation of the west evaporator process area (E-0103) and provides support for the maintenance of the mesh basket of the evaporator (DEP-EVAP-00001). The operator can affix the lifting hook to the lifting lug of the evaporator head and raise the head of the unit so that the mesh basket is exposed for maintenance. The unit is powered by 3-phase/60 Hz/460 V motors, one for the hoist (25-MTR-00002) and one for the trolley (25-MTR-00007), and has a lifting capacity of 2 tons.

4.1.1.1.2.3 Reboiler Hoist (25-HST-00003)

Refer to:	24590-WTP-M0D-25-00003	*24590-WTP-MJ-25-HST-00003 – BOF/EMF Monorails Maintenance Monorail Hoist*

The reboiler hoist (25-HST-00003) is located at the 42 ft 6 in. elevation of the west evaporator process area (E-0103) and provides support for the maintenance of the reboiler (DEP-RBLR-00001). The operator can affix the lifting hook to the lifting lugs of the reboiler head and raise the head of the unit to enable tube replacement or cleaning. The unit is powered by 3-phase/60 Hz/460 V motors, one for the hoist (25-MTR-00003) and one for the trolley (25-MTR-00008), and has a capacity of 5 tons.

4.1.1.1.2.4 Steam Generator Hoist (25-HST-00004)

Refer to:	24590-WTP-M0D-25-00004	*24590-WTP-MJ-25-HST-00004 – BOF/EMF Monorails Maintenance Monorail Hoist*

The steam generator hoist (25-HST-00004) is located at the 31 ft 3 in. elevation of the east evaporator process area (E-0102) and provides support for the maintenance of the secondary steam generator (HPS-HX-00011). The operator can affix the lifting hook to the lifting lugs of the heat exchanger and raise the unit for maintenance and repair. The unit is powered by 3-phase/60 Hz/460 V motors, one for the hoist (25-MTR-00004) and one for the trolley (25-MTR-00009), and has a capacity of 5 tons.

4.1.1.1.2.5 Truck Bay Area Hoist (25-HST-00005)

Refer to:	24590-WTP-M0D-25-00005	*24590-WTP-MJ-25-HST-00005 – BOF/EMF Monorails Maintenance Monorail Hoist*

The truck bay area hoist (25-HST-00005) is located at the 18 ft 3 in. elevation of the LAW effluent process building. The monorail hoist provides the capability to lift and transport equipment from the truck unloading area (E-0108) to the sub-change (E-0101) through a bi-sliding import door separating the two rooms. The unit is powered by 3-phase/60 Hz/460 V motors, one for the hoist (25-MTR-00005) and one for the trolley (25-MTR-00010), and has a capacity of 5 tons.

4.1.1.1.2.6 Filter Hoist (25-HST-00006)

Refer to:	24590-WTP-M0D-25-00006	*BOF/EMF Maintenance Monorail Hoist for Filter DEP-FILT-00003*

The filter hoist (25-HST-00006) is located at the 54 ft 9 in. elevation of the west evaporator process area (E-0103) and provides support for the maintenance of the evaporator feed pre-filter (DEP-FILT-00003). The operator can affix the lifting hook to the lifting lugs provided on the top head of the filter vessel and raise the head for access to the candle filter assembly. The filter assembly can also be removed and transferred horizontally to a location adjacent to the filter vessel for maintenance and cleaning. The unit is powered by 3-phase/60 Hz/460 V motors, one for the hoist (25-MTR-00011) and one for the trolley (25-MTR-00012), and has a capacity of 5 tons.

4.1.1.1.3 Fire Barriers

Refer to:	24590-BOF-FHA-RAFP-FP-0001	*Fire Hazards Analysis (FHA) for the Effluent Management Facility (EMF)*
	24590-BOF-U1-25-00001	*Balance of Facilities LAW effluent Process Bldg. & LAW Effluent Drain Tank Bldg. Fire Barrier Drawing Elevation 0'-0"*
	24590-BOF-U1-26-00001	*Balance of Facilities LAW Effluent Utility Bldg. & LAW Effluent Electrical Bldg. Fire Barrier Drawing Elevation 0'-0"*

The fire safety strategy for all fire areas of the EMF relies primarily on area protection and area separation. The facility interfaces with the fire protection water (FPW) system to control fires originating within the EMF through an automatic fire suppression system for area protection. The requirement for area separation is implemented exterior to the facility through the use of building separation, while fire barriers implement the requirement on the interior of the facility. Several fire barriers are provided within the LAW effluent process and LAW effluent drain tank buildings. A two-hour fire rated vertical barrier is provided to separate the west evaporator process area (E-0103) from the east evaporator process area (E-0102), the AFR skid room (E-0103A), and the C&I room (E-0103B) to prevent the propagation of a postulated fire between different fire areas. A one-hour fire rated vertical and horizontal barrier is provided on the west side of the drain tank chase (EDCH01) for further hazard compartmentalization between the LAW effluent process building and the LAW effluent drain tank building. The south walls of the AFR skid room (E-0103A), C&I room (E-0103B), and fire riser room (E-0101A) include one-hour fire rated barriers in accordance with IBC-2000.

4.1.1.1.4 Facility Secondary Containment

Refer to:	24590-BOF-A5-25-05200001	*LAW Effluent Process Bldg. 25 Drain Tank Bldg. 25A Utility Bldg. 26 Architectural Room Finish Schedule*
	24590-BOF-M0C-DEP-00001	*Liner Height Calculation in the EMF*
	24590-BOF-PER-M-16-003	*Dangerous Waste Permit (DWP) Liner Heights in the Effluent Management Facility (EMF)*

The EMF structure provides secondary containment for the five dangerous waste permit affecting areas of the LAW effluent process and LAW effluent drain tank buildings containing DEP system process piping and equipment. The drain tank cell (ED-B001) is equipped with stainless steel liners on the floor and walls, up to the −34 ft elevation, and finished with epoxy novolac coating from the top of the liner to the −30 ft 10 in. elevation. The east evaporator process area (E-0102), west evaporator process area (E-0103), and sub-change (E-0101) floors, concrete walls, and gypsum wall boards are finished with an epoxy novolac coating up to the 7 ft 6 in. elevation. Although the sub-change does not contain a source of dangerous waste, the design assumes that the door between the sub-change and the east evaporator process area is open and that the gypsum wall board separating the two rooms fails. The outdoor process condensate tank area (E-0106) floors and walls are finished with a 100% polyurea coating system up to the 7 ft 9 in. elevation. The outdoor feed tank area (E-0105) is equipped with stainless steel liners on the floor and walls, up to the 7 ft 6 in. elevation.

Secondary containment is also provided for the hazardous material that has the potential to accumulate in the chemical storage area (E-0107) and the truck unloading area (E-0108). The floor and wall of the chemical storage area, up to the 5 ft 8 in. elevation, are coated with a 100% solids polyurea solution. The same finish is applied to the truck unloading area, although only to the floor and 2 ft high curb.

The drain tank pipe chase (EDCH01) is not provided with liners or finishes because the encasement portion of the coaxial DEP system process piping running through the structure serves the secondary containment function.

4.1.1.2 DEP System Description

The EMF houses the DEP system, which collects, processes, and disposes of the radioactive liquid effluents from the LAW Facility, Lab, and associated transfer line drains and flushes. The EMF and DEP system are designed to support the LAW Facility throughput design and treatment capacities of 30 MTG per day and 21 MTG per day, respectively. The DEP system contains an evaporator system and 9 major process vessels. For details related to the chemical reagent systems supporting the DEP system, refer to 24590-WTP-3ZD-SHR-00001, *System Design Description for the WTP Process Reagent Systems (AFR, MXR, NAR, SHR, SNR, SPR, STR).* All waste streams, including mixed waste (hazardous and radioactive), are identified, minimized, and have designated disposal routes. The facility design accommodates disposal routes, size reduction, encapsulation/packaging, accumulation, staging, surveying, and transfer and export of secondary waste streams as defined for the EMF in a secondary solid waste management plan.

Transfer of dilute effluent from EMF to LERF/ETF is accomplished through a dedicated line to LERF/ETF. The tie-in point is upstream of the interface point between WTP and LERF/ETF (shown as Nodes 8A and 8B on 24590-WTP-B2-C12T-00001). Dilute liquid effluents that are within the permit acceptance limits specified in ICD-06 are discharged to the LERF/ETF for subsequent treatment and disposal. The off-normal concentrated effluent return line from the EMF to the Tank Farms is shown as Node 14 on 24590-WTP-B2-C12T-00001. Concentrated liquid effluents that are within the permit acceptance limits specified in ICD-31 can be transferred to Tank Farms during off-normal operating conditions. Furthermore, the design includes a load-out point to transfer evaporator feed and concentrate to a tanker truck for removal during off-normal conditions (option following an as low as reasonably achievable [ALARA], viability, and safety study).

For clarity, the description of the DEP system is separated into four subcategories: the evaporator feed subsystem, the evaporator process subsystem, the evaporator discharge subsystem, and other system equipment. For an overview of the DEP system and the subsystems described in this section, refer to Figure 4-1.

Figure 4-1 Simplified DEP System Overview

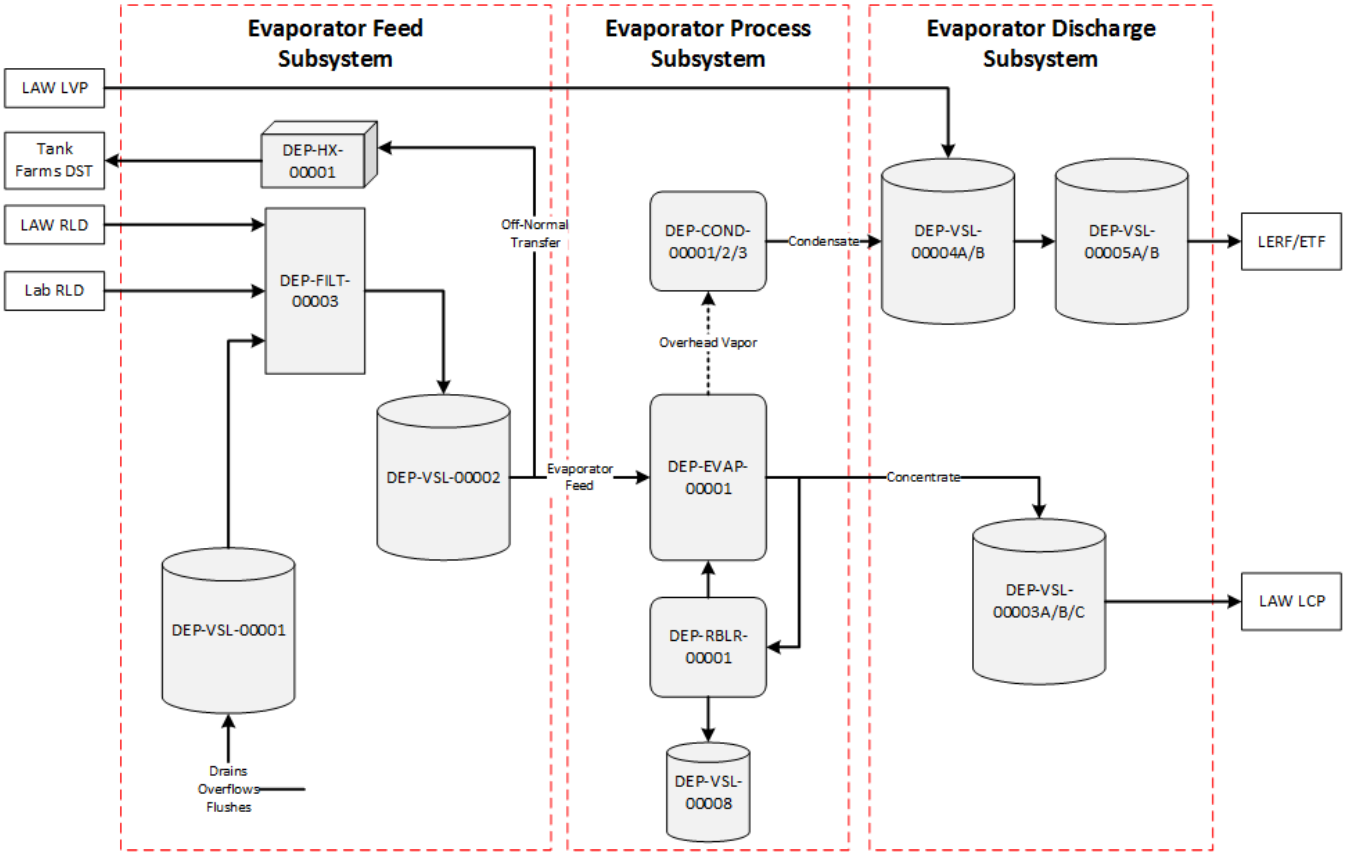

4.1.1.2.1 Evaporator Feed Subsystem Description

The evaporator feed subsystem prepares radioactive mixed waste effluent from the LAW and Lab Facilities and any flushes/drains associated with these transfer lines or the DEP system for processing in the evaporator. In off-normal operating conditions, the evaporator feed is returned to Tank Farms or removed using a tanker truck.

4.1.1.2.1.1 Low Point Drain Vessel (DEP-VSL-00001)

Refer to:	24590-BOF-M6-DEP-00001001	*P&ID – BOF/EMF Direct Feed LAW - EMF Process System - Low Point Drain Vessel – DEP-VSL-00001*
	24590-BOF-M6-DEP-00001002	*P&ID – BOF/EMF Direct Feed LAW - EMF Process System – Low Point Drain Vessel Pumps - DEP-PMP-00001A/B*
	24590-BOF-MFD-DEP-00001	*Mechanical Agitator DEP-AGT-00001 for Low Point Drain Vessel DEP-VSL-00001*
	24590-BOF-MVC-DEP-00001	*DEP Low Point Drain Vessel (DEP-VSL-00001) – Vessel Sizing, Vessel Overflow Nozzle Sizing, and Plant Wash System Sizing*
	24590-BOF-MVD-DEP-00002	*Low Point Drain Vessel*

The low-point drain vessel (DEP-VSL-00001) normally collects drains of flush water after transfers of any radiological waste streams to/from the EMF. This includes the following transfers:

- Submerged bed scrubber condensate/plant washes from the LAW RLD system to the DEP-VSL-00002
- Caustic scrubber effluent from the LAW LVP system to the DEP-VSL-00004A/B
- Radioactive mixed waste effluents from the Lab RLD system to the DEP-VSL-00002
- Treated LAW feed from the TOC and recycled feed from DEP-VSL-00003A/B/C to the LAW LCP system

Additionally, the vessel collects effluent from sources within the EMF during off-normal scenarios, including:

- Drains of flush water from DEP-HX-00001 transfers to Tank Farms
- DEP system process vessel overflows (except for DEP-VSL-00008)
- Sumps with the potential to contain radioactive fluid (DEP-SUMP-00002A/B, DEP-SUMP-00004A/B)
- The truck unloading area sump (DEP-SUMP-00008)
- Drains from the sampling station (DEP-HOOD-00001)
- Off-specification evaporator concentrate from DEP-PMP-00007A/B
- Drains from the evaporator (DEP-EVAP-00001)

The low-point drain vessel has an inner diameter of 14 ft and a tangent to tangent height of 12 ft 9 in., is constructed of Type 316/316L stainless steel, and is located below grade in the drain tank cell (ED-B001) of the LAW effluent drain tank building. The vessel is designed and constructed to ASME BPVC Section VIII Division 1. The maximum operating volume is 13,800 gallons and the total volume of the vessel is 18,000 gallons. The vessel is fitted with temperature and level instrumentation, although only the vessel level is actively maintained within the normal operating range.

The low-point drain vessel is equipped with an agitator (DEP-AGT-00001) to help prevent buildup of settled solids in the waste. The agitator has a connection to facilitate maintenance access for oil changes, and is provided with a 3-phase/60 Hz/460 V motor (DEP-MTR-00001). The agitator impeller is constructed of Type 316L stainless steel. The vessel is also equipped with two fluid-driven rotating spray nozzles (DEP-NOZ-00001/00011) located on opposite sides of the vessel to wash both sides of the vessel interior with water from the DIW system.

DEP-VSL-00001 is designed with a 10-inch overflow line which discharges excess effluent to the low point drain vessel sump (DEP-SUMP-00001). The overflow line contains a loop seal which is filled with demineralized water to prevent potentially radioactive air from flowing out during normal operating conditions. The low point drain vessel is purged with air drawn into the vessel head space through a filtered air intake and is vented to the vessel vent header in the DVP system. The DVP system maintains a negative pressure in the vessel to prevent hydrogen accumulation in the vessel headspace.

4.1.1.2.1.2 Low Point Drain Vessel Sump (DEP-SUMP-00001)

Refer to:	24590-BOF-DD-25-00015	*Effluent Management Facility 24" Dia. Sump in Secondary Containment Sections and Details*
	24590-BOF-M6-DEP-00001002	*P&ID – BOF/EMF Direct Feed LAW - EMF Process System – Low Point Drain Vessel Pumps - DEP-PMP-00001A/B*
	24590-BOF-M6C-DEP-00001	*DEP Sump, Sump Pump and Pipeline Sizing*
	24590-BOF-MPD-DEP-00009	*Air Operated Diaphragm Pump*

The low point drain vessel sump (DEP-SUMP-00001) collects overflow from DEP-VSL-00001 and drains from the underground waste transfer line leak detection boxes. The outer shell of coaxial piping in the pipe chase that can be manually flushed using the local DIW utility station also discharges to the sump. The sump is located along the south wall of the drain tank cell (ED-B001) at the (-) 39'-0" elevation of the LAW effluent drain tank building. The cylindrical sump has a capacity of 58 gallons, is 2 ft in diameter, and is 30 in. deep. The pipe and plate sections of the sump are both constructed of Type 304L stainless steel, while the grating material is either Type 304L or 316L. The low point drain vessel sump pump (DEP-PMP-00031) is an air powered double diaphragm pump located above DEP-SUMP-00001 on platform EDPB001C that transfers the sump contents to the evaporator feed vessel (DEP-VSL-00002) through the evaporator feed pre-filter (DEP-FILT-00003). The suction standpipe of the pump is installed ½ in. off the bottom of the sump. The pump is constructed of Type 316/316L stainless steel, has a maximum capacity of 45 gal/min, and discharges effluent at 76 psig. A pressure safety valve is supplied on the PSA system supply line to the pump for overpressure protection of the air diaphragm section of the pump.

4.1.1.2.1.3 Low Point Drain Vessel Pumps (DEP-PMP-00001A/B)

Refer to:	24590-BOF-M6-DEP-00001002	*P&ID – BOF/EMF Direct Feed LAW - EMF Process System – Low Point Drain Vessel Pumps - DEP-PMP-00001A/B*
	24590-BOF-MPC-DEP-00002	*BOF DEP Low Point Drain Vessel Pump (DEP-PMP-00001A/B) Sizing and Line Sizing*
	24590-BOF-MPD-DEP-00015	*Low Point Drain Vessel Pumps*

The low point drain vessel pumps (DEP-PMP-00001A/B) in DEP-VSL-00001 are normally used to batch transfer the vessel contents to the evaporator feed vessel (DEP-VSL-00002) through the evaporator feed pre-filter (DEP-FILT-00003). The pumps are also capable of recirculating the vessel contents through the sampling station (DEP-HOOD-00001). The vertical turbine pumps have a rated capacity of 70 gpm, discharge effluent at 72.4 psig, are powered by 5hp, 3-phase/60 Hz/460 V induction motors (DEP-MTR-00001A/B), and are constructed of Type 316L stainless steel. The pump transfer lines include quick connection points to facilitate flushing with demineralized water from the local DIW system utility station.

4.1.1.2.1.4 Evaporator Feed Pre-Filter (DEP-FILT-00003)

Refer to:	24590-BOF-M6-DEP-00002004	*P&ID – BOF/EMF Direct Feed LAW EMF – Process System - Evaporator Feed Vessel - Prefilter DEP-FILT-00003*
	24590-BOF-PYD-DEP-00002	*Evaporator Feed Pre-Filter*

The evaporator feed pre-filter (DEP-FILT-00003) is a candle type unit that filters various effluents to a particle diameter of 5 micron before they enter the evaporator feed vessel (DEP-VSL-00002). The normal supply through the filter is radioactive liquid from the LAW and Lab RLD systems and effluent from DEP-VSL-00001. The filter is located on platform EP0103A in the northwest corner of the west evaporator process area (E-0103). In the off-normal scenario where the evaporator concentrate needs to be reprocessed, the filter also removes suspended solids from the DEP-VSL-00003A/B/C concentrate stream transferred to DEP-VSL-00002. Additionally, the off-specification concentrate stream transferred from DEP-VSL-00003A/B/C to Tank Farms through DEP-HX-00001 passes through the filter. The unit is rated for 162 gpm and is designed to process 16,000 gallons of fluid before requiring a periodic back pulse using air from the PSA system. Backflushes are sent to the evaporator concentrate vessels (DEP-VSL-00003A/B/C) for eventual transfer as feed to the LAW Facility. The filter and its downstream transfer lines can be flushed with demineralized water or process condensate. Pressure safety valves located on the piping line from the discharge of the filter to DEP-VSL-00002 protect the filter from over-pressurization.

4.1.1.2.1.5 Evaporator Feed Vessel (DEP-VSL-00002)

Refer to:	24590-BOF-M6-DEP-00002001	*P&ID – BOF/EMF - Direct Feed LAW EMF – Process System - Evaporator Feed Vessel - DEP-VSL-00002*
	24590-BOF-MPD-DEP-00016	*Mixing Eductors for Atmospheric Vessel DEP-VSL-00002*
	24590-BOF-MVC-DEP-00005	*DEP Evaporator Feed Vessel (DEP-VSL-00002) – Vessel Sizing, Vessel Overflow Nozzle Sizing, and Plant Wash System Sizing*
	24590-BOF-MVD-DEP-00003	*Evaporator Feed Vessel*

Under normal conditions, the evaporator feed vessel (DEP-VSL-00002) receives filtered effluent from the LAW RLD system, the Lab RLD system, and the low point drain vessel (DEP-VSL-00001). Additionally, the vessel can receive filtered evaporator concentrate from DEP-VSL-00003A/B/C for reprocessing, non-filtered off-specification evaporator concentrate directly from DEP-EVAP-00001, non-filtered off-specification condensate for reprocessing from the overhead sampling vessels (DEP-VSL-00004A/B), and contaminated reboiler condensate from DEP-VSL-00008. The vessel includes the capability to add sodium hydroxide from the SHR system to adjust the pH of the contents. Sodium hydroxide is added if necessary after each transferred input during normal operation for more advantageous corrosion conditions.
The evaporator feed vessel has an inside diameter of 14 ft and a tangent to tangent height of 32 ft, is constructed of UNS N08367, and is located in the northwest corner of the LAW effluent process building in the feed tank area (E-0105). The vessel is designed and constructed to ASME BPVC Section VIII Division 1. The maximum operating volume is 38,000 gallons and the total volume of the vessel is 42,300 gallons. The vessel is fitted with level instrumentation, which is used to maintain the vessel level in an acceptable range. The outlet piping of the vessel is fitted with temperature instrumentation to monitor vessel temperature.

The evaporator feed vessel is equipped with eductors (DEP-EDUC-00001A/B/C) to help prevent the buildup of settled solids in the waste and to provide a homogenous mixture for sampling. The eductors receive fluid from the evaporator feed vessel recirculation pumps (DEP-PMP-00012A/B/C) and operate while the pumps are running. The vessel also includes a fluid-driven rotating spray nozzle (DEP-NOZ-00003) to wash the vessel interior with demineralized water. The nozzle supplies 95 gpm of water at 80 psig.

DEP-VSL-00002 is designed with an 8-inch overflow line which discharges excess evaporator feed to the low point drain vessel (DEP-VSL-00001). The evaporator feed vessel is purged with air drawn through the vessel head space through a filtered air intake and is vented to the vessel vent header in the DVP system.

4.1.1.2.1.6 Evaporator Feed Vessel Recirculation Pumps (DEP-PMP-00012A/B/C)

Refer to:	24590-BOF-M6-DEP-00002002	*P&ID – BOF/EMF - Direct Feed LAW EMF – Process System - Evaporator Feed Vessel Recirculation Pumps – DEP-PMP-00012A/B/C*
	24590-BOF-MPC-DEP-00005	*DEP Evaporator Feed Vessel Recirculation Pump Sizing (DEP-PMP-00012A/B/C)*
	24590-BOF-MPD-DEP-00006	*BOF EMF Evaporator Feed Vessel Recirculation Pump*

The evaporator feed vessel recirculation pumps (DEP-PMP-00012A/B/C) are located in the west evaporator process area (E-0103) and are normally used to recirculate fluid back to the evaporator feed vessel (DEP-VSL-00002) to power the mixing eductors (DEP-EDUC-00001A/B/C). Two pumps normally operate while one unit acts as a standby. While the vessel contents are recirculating, a sample can be drawn at DEP-HOOD-00001 to characterize the effluent in the vessel. In off-normal operating modes (e.g., the evaporator is off or not

functioning), the pumps are used to transfer feed to the Tank Farms through the effluent cooler (DEP-HX-00001). The centrifugal pumps have a capacity of 160 gpm, discharge effluent at 99.1 psig, are powered by 20 hp, 3-phase/60 Hz/460 V induction motors (DEP-MTR-00012A/B/C), and are constructed of CD4MCu stainless steel.

4.1.1.2.1.7 Evaporator Feed Vessel Transfer Pumps (DEP-PMP-00002A/B)

Refer to:	24590-BOF-M6-DEP-00002003	*P&ID – BOF/EMF - Direct Feed LAW EMF – Process System - Evaporator Feed Vessel Transfer Pumps DEP-PMP-00002A/B*
	24590-BOF-MPC-DEP-00013	*DEP Evaporator Feed Vessel Transfer Pump (DEP-PMP-00002A/B) and Suction/Discharge Line Sizing*
	24590-BOF-MPD-DEP-00001	*BOF DEP Evaporator Feed Vessel Transfer Pump*

The evaporator feed vessel transfer pumps (DEP-PMP-00002A/B) are located in the west evaporator process area (E-0103) and transfer evaporator feed to the recirculation loop of the evaporator system. A recirculation loop back to DEP-VSL-00002 is provided to keep the pumps running at their minimum required flowrate when flow to the evaporator is not required. The recirculation loop includes a square-edge type restriction orifice (DEP-RO-00017) to increase the system resistance and provide pump protection. The centrifugal pumps have a capacity of 16.5 gpm, discharge effluent at 21.2 psig, are powered by 3 hp, 3-phase/60 Hz/460 V induction motors (DEP-MTR-00002A/B), and are constructed of CD4MCu stainless steel.

4.1.1.2.1.8 Effluent Cooler (DEP-HX-00001)

Refer to:	24590-BOF-M6-DEP-00002006	*P&ID – BOF/EMF - Direct Feed LAW EMF – Process System Evaporator Concentrate/Feed Vessels LAW Effluent Cooler DEP-HX-00001*
	24590-BOF-MEC-DEP-00002	*DFLAW EMF (DEP) Heat Exchanger DEP-HX-00001 Heat Duty*
	24590-BOF-MED-DEP-00001	*Evaporator Concentrate/Feed LAW Effluent Cooler*

To meet the waste acceptance requirements of ICD-31, evaporator concentrate and feed must be chemically adjusted and sufficiently cooled in the DEP system prior to transfer to Tank Farms. Sodium hydroxide is added to the evaporator feed vessel (DEP-VSL-00002) and the evaporator concentrate vessels (DEP-VSL-00003A/B/C) and mixed through vessel eductors. Once these feeds are transferred from their respective vessels, sodium nitrite is added via inline mixing for further corrosion mitigation. If evaporator concentrate is being transferred to Tank Farms because the LAW Facility is unavailable or the effluent does not meet the specifications required for the LAW Facility, then process condensate is also added. When the fluid temperature is greater than 95°F, the batch passes through the effluent cooler (DEP-HX-00001) before exiting the EMF. The spiral type, plate and frame heat exchanger is located in the west evaporator process area (E-0103), has a heat duty of 2,630,000 BTUH, and is designed for a flow rate of 94 gpm. The plates and nozzles of the unit are constructed of Type 316/316L stainless steel. The cold side of the unit receives 150 gpm of cooling water from the PCW system. Dual PSVs are provided on both the hot and cold side of the heat exchanger to provide protection from over-pressurization while eliminating the need for a service outage while performing maintenance on a relief valve. The cooling water return to the PCW system is monitored for conductivity and the transfer line can be flushed to DEP-SUMP-00002A/B if it is determined that the system has been contaminated. After the process fluid passes through the heat exchanger, it is monitored to determine whether the waste acceptance requirements of ICD-31 are met before transferring the batch to Tank Farms. The batch is transferred to the low point drain vessel (DEP-VSL-00001) if the corrosion mitigation controls are not met.

4.1.1.2.2 Evaporator Process Subsystem Description

The evaporator process subsystem concentrates dilute radionuclides and salts from the LAW and Lab RLD systems to recycle back into LAW Facility glass production operations and to produce low activity condensate for disposal at LERF/ETF.

4.1.1.2.2.1 Evaporator Separator Vessel (DEP-EVAP-00001)

Refer to:	24590-BOF-M6-DEP-00003001	*P&ID – BOF/EMF Direct Feed LAW EMF - Evaporator Separator - DEP-EVAP-00001*
	24590-BOF-MEC-DEP-00003	*Process Data for the DEP Evaporator Separator Vessel (DEP-EVAP-00001), Reboiler (DEP-RBLR-00001), Primary Condenser (DEP-COND-00001), and Recirculation Pump (DEP-PMP-00017)*
	24590-BOF-MVD-DEP-00009	*Evaporator Separator Vessel*

The evaporator separator vessel (DEP-EVAP-00001) concentrates the nonvolatile species of the waste stream for recycling in the LAW Facility glass production operations. The unit primarily receives feed from the evaporator feed vessel (DEP-VSL-00002) through the reboiler (DEP-RBLR-00001). The DEP evaporator also receives concentrated evaporator effluent recirculated from the evaporator concentrate discharge pumps (DEP-PMP-00007A/B). Feed streams to the evaporator are combined with anti-foam reagent supplied by the anti-foam metering pumps (AFR-PMP-00014A/B) in batches to reduce foam generation during the evaporation process. Recirculated concentrate effluent from the evaporator reboiler is introduced below the liquid level and flashes in the vacuum atmosphere at the liquid surface. . The overhead vapors, mainly water, pass through mist eliminators to remove entrained liquid, with the overhead vapor continuing on to the primary condenser (DEP-COND-00001). The majority of the bottom liquid is recycled through DEP-RBLR-00001 with a small amount sent to the evaporator concentrate vessels (DEP-VSL-00003A/00003B/00003C).

The upper portion of the evaporator consists of a mesh pad, a mesh basket, a bubble cap tray, and a spray wash system. The mesh pad is a set of DEMISTER® multi-layered woven wire segments used to eliminate mist in the evaporator. The mesh pad is contained and supported by a mesh basket which is restrained using tabs and a bolted connection. A bubble cap tray (including downcomer pipe and seal pan assembly) is installed below the mesh basket to further reduce entrainment in the evaporator. The spray wash system consists of two spray headers: a lower spray that operates continuously to keep the bottom of the mesh pad wetted and an upper spray above the mesh pad that is operated as an intermittent/maintenance wash. In the event of off-specification condensate, the evaporator also receives recirculated effluent from the downstream condenser for reprocessing. The evaporator can be drained to the low point drain vessel (DEP-VSL-00001) through the use of a removable hose. The evaporator also receives purge air through a vacuum breaker HEPA filter (DEP-HEPA-00001A) for long term evaporator shutdown. Refer to Figure 4-2 for additional evaporator details.

The upper portion of the evaporator separator vessel has an inner diameter of 4 ft 6 in., the lower portion of the vessel has an inner diameter of 6 ft 5 in., and the unit has a tangent to tangent height of 17 ft 4 in. The evaporator is constructed of UNS N06022 and is located in the LAW effluent process building's west evaporator process area (E-0103). The maximum operating volume of the vessel is 1,177 gallons and the total volume of the vessel is 3,544 gallons. It is designed and constructed to ASME BPVC Section VIII Division 1. The evaporator separator vessel is fitted with level, , pressure, and differential pressure instrumentation that interface with the PCJ for remote monitoring of evaporator separator vessel conditions. The level and pressure in the vessel are monitored and maintained within an acceptable range. The pressure differential is monitored across the bubble cap tray and across the DEMISTER® pads.

Figure 4-2 DEP Evaporator Separator Vessel

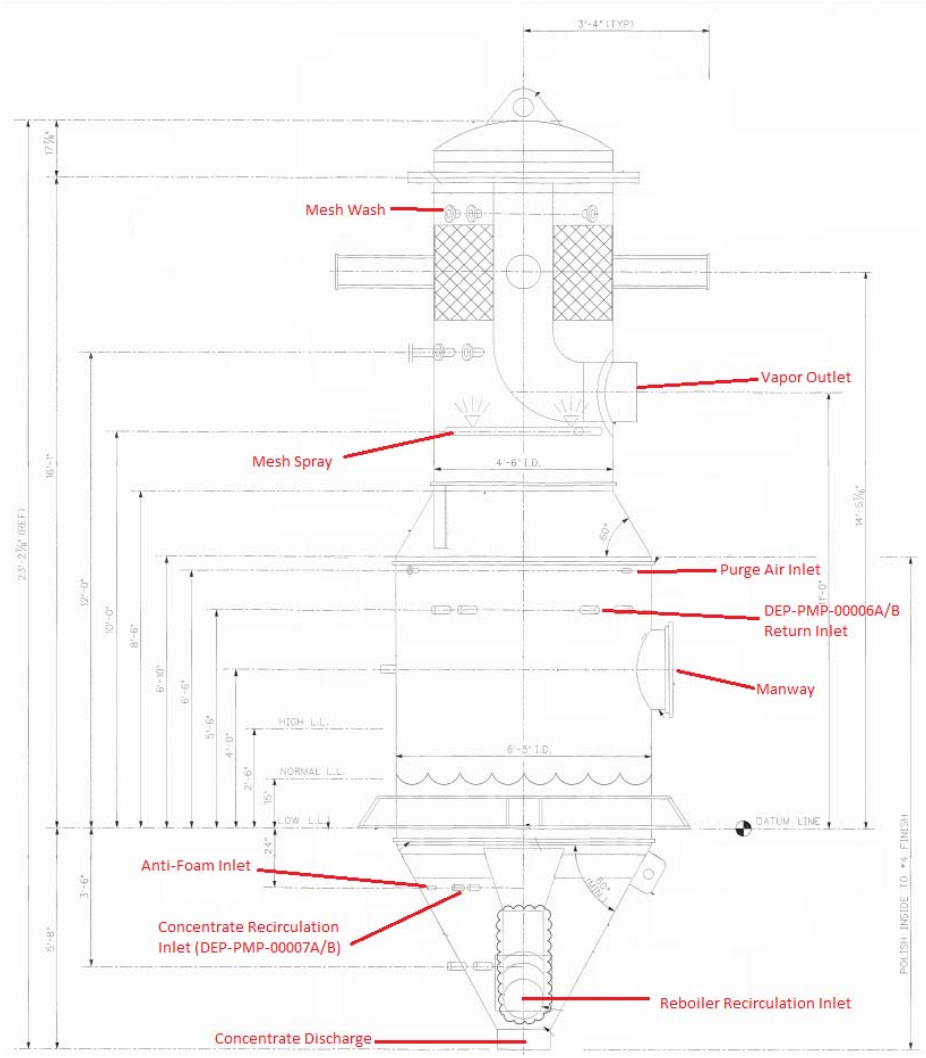

4.1.1.2.2.2 DEP Evaporator Recirculation Pump (DEP-PMP-00017)

Refer to:	24590-BOF-M6-DEP-00003001	*P&ID – BOF/EMF Direct Feed LAW EMF - Process System Evaporator Reboiler - DEP-RBLR-00001*
	24590-BOF-MPC-DEP-00016	*DEP Evaporator Recirculation Pump (DEP-PMP-00017) Pump, Line, and Restriction Orifice Sizing*
	24590-BOF-MPD-DEP-00013	*DEP Evaporator Recirculation Pump*

The DEP evaporator recirculation pump (DEP-PMP-00017) is located in the west evaporator process area (E-0103) and is used to recirculate the contents of the evaporator and feed from the evaporator feed vessel (DEP-VSL-00002) through the reboiler (DEP-RBLR-00001). A restriction orifice is included on the discharge line from the pump to add resistance to the system and ensure that the centrifugal pump functions properly. The centrifugal pump has a capacity of 3,500 gpm, discharges concentrate at 11.66 psig, is powered by a 40 hp, 3-phase/60 Hz/460 V induction motor (DEP-MTR-00017), and is constructed of CD4MCuN stainless steel. The PSW system provides barrier makeup fluid for the mechanical pump seal.

4.1.1.2.2.3 Evaporator Concentrate Discharge Pumps (DEP-PMP-00007A/B)

Refer to:	24590-BOF-M6-DEP-00003003	*P&ID – BOF/EMF Direct Feed LAW EMF - Process System Evaporator Concentrate Discharge Pumps DEP-PMP-00007A/B*
	24590-BOF-MPC-DEP-00009	*DEP Evaporator Concentrate Discharge Pump (DEP-PMP-00007A/B) Sizing and Line Sizing*
	24590-BOF-MPD-DEP-00005	*BOF DEP Evaporator Concentrate Discharge Pump*

The evaporator concentrate discharge pumps (DEP-PMP-00007A/B) are located in the west evaporator process area (E-0103) and normally recirculate evaporator bottom concentrate through an instrumentation skid measuring density, radiation, and flow (DEP-SKID-00005) back to the evaporator (DEP-EVAP-00001). The skid includes control logic that maintains the density of the concentrate in the evaporator and serves as the primary means of controlling the radiation level in the fluid. If the concentrate meets the density and radiation standards of downstream equipment, then a fraction of the concentrate is transferred to the evaporator concentrate vessels (DEP-VSL-00003A/B/C). In the event of off-specification concentrate quality, the pumps transfer effluent back to the evaporator feed vessel (DEP-VSL-00002), with the remaining fluid in the piping drained to the low point drain vessel (DEP-VSL-00001). The centrifugal pumps have a capacity of 11 gpm, discharge concentrate at 41.6 psig, are powered by 5 hp, 3-phase/60 Hz/460 V induction motors (DEP-MTR-00007A/B), and are constructed of CD4MCu stainless steel. The PSW system provides barrier makeup fluid for the mechanical pump seals. The pump suctions include quick disconnects to facilitate flushing of the downstream transfer lines with water from a local DIW system utility station in the west evaporator process area.

4.1.1.2.2.4 DEP Evaporator Reboiler (DEP-RBLR-00001)

Refer to:	24590-BOF-M6-DEP-00003002	*P&ID – BOF/EMF Direct Feed LAW EMF - Process System Evaporator Reboiler - DEP-RBLR-00001*
	24590-BOF-MBD-DEP-00001	*DEP Evaporator Reboiler*
	24590-BOF-MEC-DEP-00003	*Process Data for the DEP Evaporator Separator Vessel (DEP-EVAP-00001, Reboiler (DEP-RBLR-00001), Primary Condenser (DEP-COND-00001), and Recirculation Pump (DEP-PMP-00017)*

The DEP evaporator reboiler **(**DEP-RBLR-00001) is a cylindrical, vertically oriented, counter-current forced flow shell and tube reboiler that heats the high flow rate bottoms stream (recirculated concentrate) from the evaporator separator vessel (DEP-EVAP-0001) and returns the stream to the evaporator. The process fluid flows through the tube side, with saturated steam from the HPS system secondary steam generator (HPS-HX-00011) provided on the shell side. Non-condensable vapor is vented to the inter-condenser (DEP-COND-00002) for further processing.

The DEP evaporator recirculation pump (DEP-PMP-00017) is used to transfer recirculated concentrate to the DEP Evaporator Reboiler (DEP-RBLR-00001) at a continuous flow of 3,500 gpm. The reboiler has temperature, conductivity, and level sensing capabilities on the utility outlet piping, and temperature sensing capability on the piping connected to the concentrate outlet of the reboiler. These sensors interface with the PCJ for remote monitoring of the conditions within the reboiler. The DEP reboiler conductivity measurement on the utility side of the reboiler is used to remotely monitor the reboiler for breakthrough of concentrated effluent to the secondary side of the reboiler, which may be an indicator of tube leaks. Steam condensate that collects on the utility side of the reboiler is transferred to the reboiler condensate collection vessel (DEP-VSL-00008) before returning to the SCW system.

The process side of the reboiler consists of 222 individual tubes, each with an outer diameter of 1½ in. and length of 8 ft. The shell has an inner diameter of 2 ft 9 in. and a tangent to tangent height of 12 ft 5 in. The shell is constructed of Type 316L stainless steel, and is designed in accordance with ASME BPVC Section VIII Division 1. The tubes are constructed of UNS N06022. The evaporator reboiler is located in the LAW effluent process building west evaporator process area near the evaporator separator vessel and has a heat duty of 6,013,000 BTUH. The unit is designed with provisions for 4-inch-thick heat conservation insulation and is accessible from the top and bottom heads for inspection, cleaning, and plugging tubes as needed.

4.1.1.2.2.5 Reboiler Condensate Skid (DEP-SKID-00004)

Refer to:	24590-BOF-M6-DEP-00003006	*P&ID – BOF/EMF Direct Feed LAW EMF Process System Reboiler Condensate DEP-VSL-00008*
	24590-BOF-MPC-DEP-00017	*Reboiler Condensate Pump (DEP-PMP-00008A/B), Vessel (DEP-VSL-00008), and Line Sizing*
	24590-BOF-MVD-DEP-00008	*Reboiler Condensate Collection Vessel with Two (2) Reboiler Condensate Pumps*

The reboiler condensate skid (DEP-SKID-00004) is located in the east evaporator process area (E-0102) and consists of the reboiler condensate collection vessel (DEP-VSL-00008) and the reboiler condensate pumps (DEP-PMP-00008A/B). The reboiler condensate collection vessel receives steam condensate from the reboiler and stores the liquid prior to its transfer back to the SCW system. Makeup water for the vessel is provided by the DIW system. In the event of a tube leak in the reboiler, contaminated condensate is transferred to the evaporator feed vessel (DEP-VSL-00002) to avoid contaminating the secondary steam loop.

The reboiler condensate collection vessel is constructed of Type 304/304L stainless steel and is designed in accordance with ASME BPVC Section VIII Division 1. The vessel is fitted with level instrumentation, which is used to maintain the vessel level in an acceptable range. The vessel vent line to the inter-condenser (DEP-COND-00002) includes dual PSVs to protect the vessel from over-pressurization. Unlike the other DEP system vessels, DEP-VSL-00008 does not interface with the DVP system nor does it have an overflow line routed to the low point drain vessel. Instead, a valve is provided to manually drain the vessel to the east evaporator process area. This valve is also accessible to allow for vessel sampling.

The reboiler condensate pumps provide the motive force to convey reboiler condensate to the SCW system or to DEP-VSL-00002. The vertical pumps have a capacity of 15 gpm, discharge effluent at 18.3 psig, are powered by 3 hp, 3-phase/60 Hz/460 V induction motors (DEP-MTR-00008A/B), and are constructed of Type 316 stainless steel. The pumps are protected from over-pressurization effects by pressure control valves that discharge back into the reboiler condensate collection vessel.

4.1.1.2.2.6 DEP Evaporator Primary Condenser (DEP-COND-00001) and First Stage Ejector (DEP-EJCTR-00001A/B)

Refer to:	24590-BOF-M6-DEP-00003004	*P&ID – BOF/EMF Direct Feed LAW EMF Process System Evaporator Condensers - DEP-COND-00001/2/3*
	24590-BOF-MCD-DEP-00001	*DEP Evaporator First Stage Ejectors DEP Evaporator Second Stage Ejectors*
	24590-BOF-MEC-DEP-00003	*Process Data for the DEP Evaporator Separator Vessel (DEP-EVAP-00001, Reboiler (DEP-RBLR-00001), Primary Condenser (DEP-COND-00001), and Recirculation Pump (DEP-PMP-00017)*
	24590-BOF-MED-DEP-00004	*DEP Evaporator Primary Condenser*

The evaporator primary condenser (DEP-COND-00001) functions as the principal condenser for the DEP evaporator separator vessel (DEP-EVAP-00001). The overhead vapors from the top of the evaporator separator vessel are condensed in the shell side of the divided flow, shell and tube heat exchanger using a secondary cooling water loop on the tube side. The condensate gravity drained to the boot of the condenser is combined with minimum recirculation from the evaporator condensate pumps (DEP-PMP-00006A/B) and condensate from the inter and after-condensers (DEP-COND-00002/00003). The resulting effluent is transferred to the downstream users via DEP-PMP-00006A/B.

The vacuum that enables low temperature flashing in the evaporator separator vessel is established and maintained through the collapse of vapor into liquid in the primary condenser. The first stage ejector (DEP-EJCTR-00001A/B) is used for additional pressure control of the evaporator separator vessel. Non-condensable overhead vapors in DEP-COND-00001 are pulled into the first stage ejector and are entrained with high velocity steam supplied by the HPS system in the suction chamber of the ejector. The resulting gas is discharged to the inter-condenser (DEP-COND-00002). The vacuum created by the first stage ejector is regulated by adding air into the system via DEP-HEPA-00001A. The steam ejectors are both constructed of Type 316L stainless steel.

The utility side of the condenser consists of 406 individual tubes, each with an outer diameter of one inch and length of 16 ft. The shell has an inner diameter of 3 ft, a height of 7 ft 7¾ in., and a length of 18 ft 3 in. The evaporator primary condenser is constructed of Type 304L stainless steel and is located on DEP-SKID-00003 in the LAW effluent process building's east evaporator process area. It is designed and constructed to ASME BPVC-Section VIII Division 1. The unit is cooled by a secondary cooling water system which uses plant cooling water from the PCW system and has a heat duty of 5,527,620 Btu/hr. The PCW system supply line to DEP-COND-00001 is equipped with dual PSVs to protect the tube side of the unit from over-pressurization. A rupture disk is provided on the vapor line from DEP-EVAP-00001 to the primary condenser to protect DEP-EVAP-00001, the process side of DEP-RBLR-00001 and the shell side of DEP-COND-00001 from over-pressurization. A vortex breaker is installed in the boot of the primary condenser to prevent cavitation in the evaporator condensate pumps. Accessible areas of the condenser have 1.5-inch thick insulation for personnel protection, where feasible.

4.1.1.2.2.7 DEP Evaporator Inter and After-Condenser (DEP-COND-00002/00003) and Second Stage Ejector (DEP-EJCTR-00002A/B)

Refer to:	24590-BOF-M6-DEP-00003004	*P&ID – BOF/EMF Direct Feed LAW EMF Process System Evaporator Condensers - DEP-COND-00001/2/3*
	24590-BOF-MCD-DEP-00001	*DEP Evaporator First Stage Ejectors DEP Evaporator Second Stage Ejectors*
	24590-BOF-MED-DEP-00005	*DEP Evaporator Inter-Condenser*
	24590-BOF-MED-DEP-00006	*DEP Evaporator After-Condenser*

The evaporator inter-condenser (DEP-COND-00002) and after-condenser (DEP-COND-00003) work with the steam ejectors (DEP-EJCTR-00001A/B and DEP-EJCTR-00002A/B) to create additional pressure control for the evaporator separator vessel (DEP-EVAP-00001). Gas discharged from the first stage ejector is combined with the vent of the reboiler condensate collection vessel (DEP-VSL-00008), and the vent of the reboiler (DEP-RBLR-00001) in DEP-COND-00002. The vapors are condensed on the shell side of the shell and tube heat exchanger using a secondary cooling water loop on the tube side. The condensate formed in the unit drains through a steam trap to the boot of DEP-COND-00001. The second stage ejector (DEP-EJCTR-00002A/B) pulls vapor into the after-condenser (DEP-COND-00003), where the remaining vapor is drawn off into the DVP system vessel vent header. The condensate from DEP-COND-00003 flows through a steam trap to the boot of the primary condenser.

The utility sides of DEP-COND-00002 and DEP-COND-00003 consist of 54 and 20 individual tubes, respectively, each with an outer diameter of 3/4 in. and length of 6 ft. The units are both constructed of Type 304 stainless steel and are designed to ASME Section VIII Division 1. The steam ejectors are both constructed of Type 316L stainless steel. Both condensers are located on DEP-SKID-00003 in the LAW effluent process building's east evaporator process area, near the primary condenser.

The DEP evaporator inter-condenser (DEP-COND-00002) is cooled by a secondary cooling water system that uses plant cooling water from the PCW system and has a heat duty of 361,681 Btu/hr. The DEP evaporator after-condenser (DEP-COND-00003) is also cooled by a secondary cooling water system that uses plant cooling water from the PCW system and has a heat duty of 279,497 Btu/hr. A rupture disk is provided on the vapor line from DEP-EJCTR-00001A/B to DEP-COND-00002 and on the vapor line from DEP-COND-00003 to the DVP system to protect the condensers from over-pressurization. Accessible areas of the condensers have 1.5-inch thick insulation for personnel protection, where feasible.

4.1.1.2.2.8 DEP Evaporator Condensate Pumps (DEP-PMP-00006A/B)

Refer to:	24590-BOF-M6-DEP-00003005	*P&ID – BOF/EMF Direct Feed LAW EMF Process System Evaporator Condensate Pumps DEP-PMP-00006A/B*
	24590-BOF-MPC-DEP-00015	*DEP Evaporator Condensate Discharge Pump (DEP-PMP-00006A/B) Sizing and Line Sizing*
	24590-BOF-MPD-DEP-00012	*DEP Evaporator Condensate Pump*

The DEP evaporator condensate pumps (DEP-PMP-00006A/B) are located in the east evaporator process area (E-0102) and provide the motive force to transfer dilute evaporator condensate from DEP-COND-00001 to the overhead sampling vessels (DEP-VSL-00004A/B). If the condensate is off-specification, this transfer is shut off and the pumps fully recirculate the effluent back to DEP-EVAP-00001 for reprocessing. A portion of the condensate also flows continuously through the condensate duplex cartridge filter (DEP-FILT-00004A/B) to DEP-EVAP-00001 as mesh/wash spray. These filters retain particles of one micron or larger and are equipped with pressure safety valves to protect against over-pressurization. A minimum recirculation line is also provided back to DEP-COND-00001 and includes a restriction orifice for pump protection. The centrifugal pumps have a capacity of 15 gpm, discharge condensate at 26.2 psig, are constructed of Type 316 stainless steel, and are powered by 5 hp, 3-phase/60 Hz/460 V induction motors (DEP-MTR-00006A/B).

4.1.1.2.3 Evaporator Discharge Subsystem Description

The evaporator discharge subsystem collects the dilute and concentrated effluent produced by the evaporator process subsystem and transfers the solution out of the DEP system.

4.1.1.2.3.1 Evaporator Concentrate Vessels (DEP-VSL-00003A/B/C)

Refer to:	24590-BOF-M6-DEP-00005001	*P&ID – BOF/EMF Direct Feed LAW EMF Process System Evaporator Concentrate Vessel - DEP-VSL-00003A*
	24590-BOF-M6-DEP-00005002	*P&ID – BOF/EMF Direct Feed LAW EMF Process System Evaporator Concentrate Vessel - DEP-VSL-00003B*
	24590-BOF-M6-DEP-00005003	*P&ID – BOF/EMF Direct Feed LAW EMF Process System Evaporator Concentrate Vessel - DEP-VSL-00003C*
	24590-BOF-MPD-DEP-00017	*Mixing Eductors for Atmospheric Vessels DEP-VSL-00003A/B/C*

24590-BOF-MVC-DEP-00006	*Evaporator Concentrate Vessel (DEP-VSL-00003A/B/C) – Vessel Sizing, Vessel Overflow Nozzle Sizing, and Plant Wash System Sizing*
24590-BOF-MVD-DEP-00004	*Evaporator Concentrate Vessel*

The evaporator concentrate vessels (DEP-VSL-00003A/B/C) are used to collect concentrated effluent from the evaporator separator vessel (DEP-EVAP-00001). Concentrated effluent can either be recycled to the LAW LCP system in combination with the waste feed from the TOC, returned to the Tank Farms DSTs, or sent to a tanker truck (option following an ALARA, viability, and safety study). The evaporator concentrate vessels receive evaporator concentrate from the evaporator concentrate discharge pumps (DEP-PMP-00007A/B),, backflush/off-normal solids slurry from DEP-FILT-00003, and caustic from SHR-TK-00013.

The evaporator concentrate vessels have an inner diameter of 12 ft and a tangent to tangent height of 13 ft 6 in., are constructed of UNS N08367 stainless steel, and are located on the LAW effluent process building's north side in the feed tank area (E-0105). They are designed and constructed to ASME BPVC Section VIII Division 1. The maximum operating volume of the vessels is 11,800 gallons and the total volume of the vessels is 14,900 gallons. The vessels are fitted with level instrumentation and the discharge from the vessels includes temperature instrumentation for remote indication on the PCJ. The level in the vessels is monitored and maintained within an acceptable range.

The vessels are equipped with eductors (DEP-EDUC-00003A/B for DEP-VSL-00003A, DEP-EDUC-00004A/B for DEP-VSL-00003B, and DEP-EDUC-00005A/B for DEP-VSL-00003C) to provide a homogenous mixture for sampling and to suspend solids in the vessel. The eductors receive fluid from DEP-PMP-00003A/B and run only when mixing is selected and the pumps are aligned to provide flow to the eductors. Each vessel also includes a fluid-driven rotating spray nozzle (DEP-NOZ-00004/00009/00010) to wash the vessel interior with demineralized water. The nozzles supply 95 gpm of water at 80 psig.

The vessels are designed with 10-inch overflow lines which discharge excess evaporator concentrate to the low point drain vessel (DEP-VSL-00001). The evaporator concentrate vessels are purged with filtered air drawn through the vessel head space and are vented to the vessel vent header in the DVP system. These vessels have the capability to receive sodium hydroxide reagent from the SHR system for chemical adjustment to meet ICD-31 criteria for returning concentrated effluent to Tank Farms. Insulation is included on the vessels for freeze protection because they are located outdoors.

4.1.1.2.3.2 Evaporator Concentrate Transfer/Recirculation Pumps (DEP-PMP-00003A/B)

Refer to:	24590-BOF-M6-DEP-00005004	*P&ID – BOF/EMF Direct Feed LAW EMF Process System Evaporator Concentrate Vessel – Recirculation/Transfer Pumps DEP-PMP-00003A/B*
	24590-BOF-M6-DEP-00005005	*P&ID – BOF/EMF Direct Feed LAW EMF Process System Evaporator Concentrate Vessel - Recirculation*
	24590-BOF-MPC-DEP-00007	*DEP Evaporator Concentrate Vessel Transfer/Recirculation Pump (Dep-PMP-00003A/B) Sizing and Line Sizing*
	24590-BOF-MPD-DEP-00002	*Evaporator Concentrate Transfer/Recirc Pumps*

The evaporator concentrate transfer/recirculation pumps (DEP-PMP-00003A/B) are located in the west evaporator process area (E-0103) and provide the motive force to transfer evaporator concentrate from the evaporator concentrate vessels (DEP-VSL-00003A/B/C) to the LAW LCP system in combination with the feed from the TOC. If the concentrate is off-specification, the pumps recycle the effluent through DEP-FILT-00003 to DEP-VSL-00002 for reprocessing in the evaporator. Additionally, the pumps are capable of transferring

concentrate through the effluent cooler (DEP-HX-00001) to Tank Farms in the event that the LAW Facility is not available for transfers. A recirculation line is also provided back to DEP-VSL-00003A/B/C to mix the vessel contents through eductors to create a homogenous mixture for sampling. The centrifugal pumps have a capacity of 120.7 gpm, discharge condensate at 118.3 psig, are powered by 20 hp, 3-phase/60 Hz/460 V induction motors (DEP-MTR-00003A/B), and are constructed of CD4MCu stainless steel. The pumps and their downstream transfer lines can be flushed with either demineralized water or process condensate stored in DEP-VSL-00005A/B. The PSW system provides barrier makeup fluid for the mechanical pump seals.

4.1.1.2.3.3 Overhead Sampling Vessels (DEP-VSL-00004A/B)

Refer to:	24590-BOF-M6-DEP-00004001	*P&ID – BOF/EMF Direct Feed LAW EMF Process System Overhead Sampling Vessel - DEP-VSL-00004A*
	24590-BOF-M6-DEP-00004002	*P&ID – BOF/EMF Direct Feed LAW EMF Process System Overhead Sampling Vessel - DEP-VSL-00004B*
	24590-BOF-MPD-DEP-00018	*Mixing Eductors for Atmospheric Vessels DEP-VSL-00004A/B*
	24590-BOF-MVC-DEP-00002	*Overhead Sampling Vessel (DEP-VSL-00004A/B) – Vessel Sizing, Vessel Overflow Nozzle Sizing, and Vessel Wash Nozzle Design*
	24590-BOF-MVD-DEP-00005	*Overhead Sampling Vessel*

The overhead sampling vessels (DEP-VSL-00004A/B) normally receive condensate from the evaporator via the evaporator condensate pumps (DEP-PMP-00006A/B) and caustic scrubber fluids from the LAW LVP system (LVP-TK-00001). In off-normal operating scenarios, DEP-VSL-00004A/B receives off-specification condensate from the process condensate lag storage vessels (DEP-VSL-00005A/B) via the lag storage vessel transfer pumps (DEP-PMP-00005A/B) and non-radioactive effluents from DEP sumps (DEP-SUMP-00002A/B and DEP-SUMP-00004A/B) and the chemical storage area NLD sump (NLD-SUMP-00032). Each batch is analyzed at the sampling station (DEP-HOOD-00001) and characterized before transfer to the process condensate lag storage vessels (DEP-VSL-00005A/B) via the overhead sampling vessel pumps (DEP-PMP-00004A/B/C).

The overhead sampling vessels have an inner diameter of 14 ft, a tangent to tangent height of 30.8 ft, are constructed of Type 304/304L stainless steel, and are located outdoors on the LAW effluent process building's north side in the process condensate tank area (E-0106). They have been designed and constructed to ASME BPVC Section VIII Division 1. The maximum operating volume is 36,600 gallons and the total volume of the vessels is 40,800 gallons. The vessels are fitted with level instrumentation and the discharge from the vessels includes temperature instrumentation. The level in the vessels is monitored and maintained within an acceptable range.

The overhead sampling vessels are equipped with eductors (DEP-EDUC-00006/00007 for DEP-VSL-00004A and DEP-EDUC-00008/00009 for DEP-VSL-00004B) to mix the contents to allow a representative sample to be taken. The eductors receive fluid from the overhead sampling vessel pumps (DEP-PMP-00004A/B/C) and run only when mixing is selected and the pumps are aligned to provide flow to the eductors. The vessels also include a fluid-driven rotating spray nozzle (DEP-NOZ-00005/00006) to wash the vessel interior with process service water. The nozzles supply 105 gpm of water at 44.02 psig.

DEP-VSL-00004A/B are designed with 8-inch overflow lines which discharge excess evaporator condensate to the low point drain vessel (DEP-VSL-00001). The overhead sampling vessel is purged with filtered air drawn through the vessel head space and is vented to the vessel vent header in the DVP system. Insulation is included on the vessels for freeze protection because they are located outdoors.

4.1.1.2.3.4 Overhead Sampling Vessel Transfer/Recirculation Pumps (DEP-PMP-00004A/B/C)

Refer to:	24590-BOF-M6-DEP-00004003	*P&ID – BOF/EMF Direct Feed LAW EMF Process System Overhead Sampling Vessel Pumps DEP-PMP-00004A/B/C*
	24590-BOF-MPC-DEP-00004	*BOF DEP Overhead Sampling Vessel Pump (DEP-PMP-00004A/B/C) Sizing and Line Sizing*
	24590-BOF-MPD-DEP-00003	*BOF DEP Overhead Sampling Vessel Transfer/Recirculation Pump*

The overhead sampling vessel transfer/recirculation pumps (DEP-PMP-00004A/B/C) are located in the east evaporator process area (E-0102) and provide the motive force to transfer evaporator condensate from the overhead sampling vessels (DEP-VSL-00004A/B) to the process condensate lag storage vessels (DEP-VSL-00005A/B). If vessel sampling reveals that the vessel contents do not meet the waste acceptance requirements for transfer to LERF/ETF, the pumps recycle the solution back to DEP-VSL-00002 for reprocessing in the evaporator. A recirculation line is also provided back to DEP-VSL-00004A/B to mix the vessel contents through eductors to create a homogenous mixture for sampling. The centrifugal pumps have a capacity of 179.9 gpm, discharge condensate at 98.5 psig, are constructed of CD4MCu stainless steel, and are powered by 20 hp, 3-phase/60 Hz/460 V induction motors (DEP-MTR-00004A/B/C). A hose connection is provided at the common suction to the pumps to facilitate flushing with water from a local DIW/PSW utility station.

4.1.1.2.3.5 Process Condensate Lag Storage Vessels (DEP-VSL-00005A/B)

Refer to:	24590-BOF-M6-DEP-00006001	*P&ID – BOF/EMF Direct Feed LAW EMF Process System Process Condensate Lag Storage Vessel - DEP-VSL-00005A*
	24590-BOF-M6-DEP-00006002	*P&ID – BOF/EMF Direct Feed LAW EMF Process System Process Condensate Lag Storage Vessel - DEP-VSL-00005B*
	24590-BOF-MPD-DEP-00019	*Mixing Eductors for Atmospheric Vessels DEP-VSL-00005A/B*
	24590-BOF-MVC-DEP-00004	*Process Condensate Lag Storage Vessel (DEP-VSL-00005A/B) – Vessel Sizing, Vessel Overflow Sizing, and Wash Ring Sizing*
	24590-BOF-MVD-DEP-00006	*Process Condensate Lag Storage Vessel*

The process condensate lag storage vessels (DEP-VSL-00005A/B) receive batches of process condensate from the overhead sampling vessels (DEP-VSL-00004A/B), secondary steam blowdown from HPS-HX-00011, and effluent from sumps (DEP-SUMP-00003A/B and DEP-SUMP-00005A/B). These vessels allow for lag storage and characterization before transferring the condensate out of the DEP system to LERF/ETF for additional treatment and disposal.

The vessels are each equipped with eductors (DEP-EDUC-00010/00011/00012/00013 for DEP-VSL-00005A and DEP-EDUC-00014/00015/00016/00017 for DEP-VSL-00005B) and a recirculation system. This method of effluent mixing homogenizes the vessel contents in support of sampling activities, and mixing via the eductors continues until the process condensate lag storage recirculation pumps (DEP-PMP-00015A/B/C) are shut off. Each vessel also includes a series of wash rings to wash the vessel interior with process service water. The wash rings provide 105 gpm of water at approximately 42 psig.

The process condensate lag storage vessels have an inside diameter of 25 ft and a tangent to tangent height of 29 ft 6 in., are constructed of Type 316/316L stainless steel, and are located on the north side of LAW effluent process building in the process condensate tank area (E-0106). They are designed and constructed to ASME BPVC Section VIII Division 1. The maximum operating volume of the vessels is 108,208 gallons and the total volume of the

vessels is 127,260 gallons. The vessels are fitted with level and density instrumentation and the discharge from the vessels includes temperature instrumentation for remote indication in the PCJ. The level in the vessel is monitored and maintained within an acceptable range.

The vessels are designed with 10-inch overflow lines which discharge excess condensate to the low point drain vessel (DEP-VSL-00001). The process condensate lag storage vessels are purged with filtered air drawn through the vessel head space and vented to the vessel vent header in the DVP system. Additionally, DEP-VSL-00005A has a vacuum breaker line that vents to the transfer line to LERF/ETF to prevent the accumulation of negative pressure in the system. Insulation is included on the vessels for freeze protection because they are located outdoors.

4.1.1.2.3.6 Process Condensate Lag Storage Vessel Transfer Pumps (DEP-PMP-000005A/B)

Refer to:	24590-BOF-M6-DEP-00006003	*P&ID – BOF/EMF Direct Feed LAW EMF Process System Lag Storage Vessel Transfer Pumps DEP-PMP-00005A/B*
	24590-BOF-MPC-DEP-00003	*24590-BOF-MP-DEP-PMP-00005A/B Lag Storage Vessel Transfer Pump Sizing*
	24590-BOF-MPD-DEP-00004	*Process Condensate Lag Storage Vessel Transfer Pump*

The process condensate lag storage vessel transfer pumps (DEP-PMP-00005A/B) are located in the east evaporator process area (E-0102) and provide the capability to transfer evaporator condensate out of the DEP system to LERF/ETF. If the condensate is off-specification, the pumps transfer the solution back to the overhead sampling vessels (DEP-VSL-00004A/B) through a restriction orifice. A recirculation line back to DEP-VSL-00005A/B is also provided for off-normal operating conditions.

The centrifugal pumps have a capacity of 201.1 gpm, discharge condensate at 42.4 psig, are constructed of CD4MCu stainless steel, and are powered by 7.5 hp, 3-phase/60 Hz/460 V induction motors (DEP-MTR-00005A/B). A hose connection is provided at the common suction to the pumps to facilitate flushing with demineralized water from a local DIW utility station. The discharge from the pumps is first monitored to determine whether it meets the acceptance criteria of ICD-06 for a transfer to LERF/ETF. Once the appropriate parameters are met, the effluent passes through the process condensate filter (DEP-FILT-00002) to remove particles larger than 5 microns. The supply line to the filter is equipped with dual PSVs to protect the filter from over-pressurization.

4.1.1.2.3.7 Process Condensate Lag Storage Vessel Recirculation Pumps (DEP-PMP-00015A/B/C)

Refer to:	24590-BOF-M6-DEP-00006004	*P&ID – BOF/EMF Direct Feed LAW EMF Process System Lag Storage Vessel Recirculation Pumps DEP-PMP-00015A/B/C*
	24590-BOF-MPC-DEP-00008	*DEP Process Condensate Lag Storage Vessel Recirculation Pump (DEP-PMP-00015A/B/C) Sizing and Line Sizing*
	24590-BOF-MPD-DEP-00007	*BOF Process Condensate Lag Storage Vessel Recirculation Pump*

The process condensate lag storage vessel recirculation pumps (DEP-PMP-00015A/B/C) are located in the east evaporator process area (E-0102) and provide the capability to recirculate the contents of DEP-VSL-00005A/B or to reduce demineralized water usage in the process by transferring process condensate to the outlet of the low point drain vessel pumps (DEP-PMP-00001A/B), the inlet of the evaporator concentrate transfer/recirculation pumps (DEP-PMP-00003A/B), and the sodium nitrite mixing tee (DEP-MTEE-00001). While the vessel contents are recirculating, a sample can be taken at DEP-HOOD-00001 to characterize the condensate in the vessels. The centrifugal pumps have a capacity of 294 gpm, discharge condensate at 96.8 psig, are constructed of CD4MCu

stainless steel, and are powered by 25 hp, 3 phase/60 Hz/460 V induction motors (DEP-MTR-00015A/B/C). The pumps are each rated for 50% operations, such that two units are placed in operation while one remains on standby. A hose connection is provided at the common suction to the pumps to facilitate flushing with demineralized water from a local DIW utility station.

4.1.1.2.4 Other DEP System Equipment Description

4.1.1.2.4.1 Sampling Station (DEP-HOOD-00001)

Refer to:	24590-BOF-M0-DEP-00001001	*BOF/EMF Design Proposal Drawing Sampling Fume Hood*
	24590-BOF-M0-DEP-00001002	*BOF/EMF Design Proposal Drawing Sampling Fume Hood*
	24590-BOF-M0-DEP-00001003	*BOF/EMF Design Proposal Drawing Sampling Fume Hood*
	24590-BOF-M0D-DEP-00001	*BOF/EMF Sampling Fume Hood*

The sampling station (DEP-HOOD-00001) is located in the east evaporator process area (E-0102) and provides the means for the manual sampling of eight unique EMF process fluid streams while maintaining the safety of the operator/worker. These streams include:

- The contents of the low point drain vessel (DEP-VSL-00001)
- The contents of the evaporator feed vessel (DEP-VSL-00002)
- The feed to Tank Farms through the effluent cooler (DEP-HX-00001)
- The evaporator (DEP-EVAP-00001) concentrate discharge
- The contents of the evaporator concentrate vessels (DEP-VSL-00003A/B/C)
- The contents of the overhead sampling vessels (DEP-VSL-00004A/B)
- The contents of the process condensate lag storage vessels (DEP-VSL-00005A/B)
- The contents of the feed vessel area sumps (DEP-SUMP-00004A/B)

The unit consists of a fume hood, the process pipelines and valves, manual sampling collection points, utility support systems, and a drain system. The fume hood serves to capture, confine, and exhaust fumes, vapors, and particulate matter produced or generated within the enclosure. These gases are exhausted by the ACV system and combined with the exhaust from the west evaporator process area (E-0103). The process pipelines provide primary confinement for the radioactive process fluid sampled in the fume hood space. A system of valves installed on these pipelines is used to control the flow during sampling activities. The manual sampling collection points are designed to hold and secure the sampling bottle during collection. PSA and DIW system utility connection points are included in DEP-HOOD-00001 to facilitate flushing of the sampling lines at the completion of a sampling campaign and/or cleanup (washing and drying) of the sampling station working area if needed. The drain system collects the liquid waste resulting from the flushing and cleaning operations and discharges the fluid to the low point drain vessel (DEP-VSL-00001). The hood body and frame are constructed of Type 304L stainless steel and the hood liner is constructed of Type 316L stainless steel. For an overview of the design of the sampling station, refer to Figure 4-3.

Figure 4-3 Sampling Station

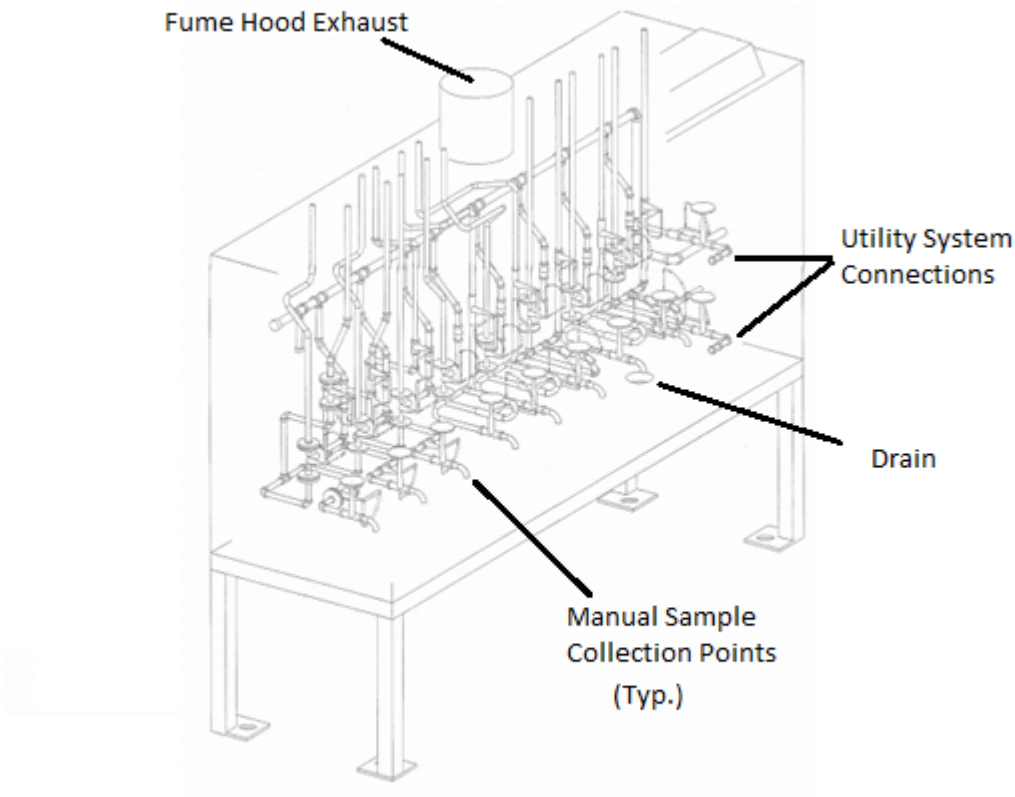

4.1.1.2.4.2 West Process Area Sumps (DEP-SUMP-00002A/B)

Refer to:	24590-BOF-DD-25-00015	*Effluent Management Facility 24" Dia. Sump in Secondary Containment Sections and Details*
	24590-BOF-M6-DEP-00009001	*P&ID – BOF/EMF Direct Feed LAW EMF Process System – Process Area Sumps DEP-SUMP-00002A/B*
	24590-BOF-M6C-DEP-00001	*DEP Sump, Sump Pump and Pipeline Sizing*
	24590-BOF-MPD-DEP-00010	*Mechanical Data Sheet: Vertical Submersible Centrifugal Pumps*

The west process area sumps (DEP-SUMP-00002A/B) collect spills and leaks that occur in the west evaporator process area (E-0103). The sumps are located on the north and south walls of this area at the ground elevation of the LAW effluent process building. The cylindrical sumps have a capacity of 58 gallons, are 2 ft in diameter, and are 30 in. deep. The pipe and plate sections of the sump are both constructed of Type 304L stainless steel, while the grating material is either Type 304L or 316L. The west process area sump pumps (DEP-PMP-00032A/B) are permanently installed electrical units submerged within the sumps that transfer the sump contents to the low point drain vessel (DEP-VSL-00001). Upon the detection of liquid in the sump, the pumps are started as soon as

practical to minimize the potential of effluent spilling from the C5 area into the C3 east evaporator process area (E-0102). The pumps have a maximum capacity of 120 gpm, discharge effluent at 47.2 psig, are powered by 10 hp, 3 phase/60 Hz/460 V induction motors, and are constructed of Type 316 stainless steel. A vacuum breaker is included on the transfer line to the low point drain vessel to prevent the accumulation of negative pressure in the system.

4.1.1.2.4.3 East Process Area Sumps (DEP-SUMP-00003A/B)

Refer to:	24590-BOF-DD-25-00015	*Effluent Management Facility 24" Dia. Sump in Secondary Containment Sections and Details*
	24590-BOF-M6-DEP-00009004	*P&ID – BOF/EMF Direct Feed LAW EMF Process System – Process Area Sumps DEP-SUMP-00003A/B*
	24590-BOF-M6C-DEP-00001	*DEP Sump, Sump Pump and Pipeline Sizing*
	24590-BOF-MPD-DEP-00010	*Mechanical Data Sheet: Vertical Submersible Centrifugal Pumps*

The east process area sumps (DEP-SUMP-00003A/B) collect spills and leaks that occur in the east evaporator process area (E-0102). The sumps are located on the north and south walls of this area at the ground elevation of the LAW effluent process building. The cylindrical sumps have a capacity of 58 gallons, are 2 ft in diameter, and are 30 in. deep. The pipe and plate sections of the sump are both constructed of Type 304L stainless steel, while the grating material is either Type 304L or 316L. The east process area sump pumps (DEP-PMP-00033A/B) are permanently installed electrical units submerged within the sumps that transfer the sump contents to the process condensate lag storage vessels (DEP-VSL-00005A/B). The pumps have a maximum capacity of 120 gpm, discharge effluent at 47.2 psig, are powered by 10 hp, 3 phase/60 Hz/460 V induction motors, and are constructed of Type 316 stainless steel.

4.1.1.2.4.4 Feed Vessel Area Sumps (DEP-SUMP-00004A/B)

Refer to:	24590-BOF-DD-25-00015	*Effluent Management Facility 24" Dia. Sump in Secondary Containment Sections and Details*
	24590-BOF-M6-DEP-00009002	*P&ID – BOF/EMF Direct Feed LAW EMF Process System – Process Vessel Area Sumps DEP-SUMP-00004A/B*
	24590-BOF-M6C-DEP-00001	*DEP Sump, Sump Pump and Pipeline Sizing*
	24590-BOF-MPD-DEP-00010	*Mechanical Data Sheet: Vertical Submersible Centrifugal Pumps*

The feed vessel area sumps (DEP-SUMP-00004A/B) collect spills and leaks that occur in the feed tank area (E-0105). The sumps are located in the northwest and northeast corners of this area at the ground elevation of the LAW effluent process building. The cylindrical sumps have a capacity of 58 gallons, are 2 ft in diameter, and are 30 in. deep. The pipe and plate sections of the sump are both constructed of Type 304L stainless steel, while the grating material is either Type 304L or 316L. The feed vessel area sump pumps (DEP-PMP-00034A/B) are permanently installed electrical units submerged within the sumps that transfer the sump contents to the low point drain vessel (DEP-VSL-00001) or the overhead sampling vessels (DEP-VSL-00004A/B). Prior to transfer, the sumps contents are sampled using the DEP sampling pumps (DEP-PMP-00042A/B). Radioactive mixed waste effluent leaked from the process vessels is transferred to DEP-VSL-00001 while rain and non-radioactive liquid is transferred to DEP-VSL-00004A/B. The pumps have a maximum capacity of 120 gpm, discharge effluent at 47.2 psig, are powered by 10 hp, 3 phase/60 Hz/460 V induction motors, and are constructed of Type 316 stainless steel. The effluent discharged from the pumps passes through the feed vessel area sump pump filter (DEP-FILT-00005) to remove particles larger than 5 microns. The supply line to the filter is equipped a PSV to protect the filter from over-pressurization.

4.1.1.2.4.5 Process Condensate Vessel Area Sumps (DEP-SUMP-00005A/B)

Refer to:	24590-BOF-DD-25-00015	*Effluent Management Facility 24" Dia. Sump in Secondary Containment Sections and Details*
	24590-BOF-M6-DEP-00009005	*P&ID – BOF/EMF Direct Feed LAW EMF Process System – Process Vessel Area Sumps DEP-SUMP-00005A/B*
	24590-BOF-M6C-DEP-00001	*DEP Sump, Sump Pump and Pipeline Sizing*
	24590-BOF-MPD-DEP-00010	*Mechanical Data Sheet: Vertical Submersible Centrifugal Pumps*

The process condensate vessel area sumps (DEP-SUMP-00005A/B) collect spills and leaks that occur in the process condensate tank area (E-0106). The sumps are located on the north and south walls of this area at the ground elevation of the LAW effluent process building. The cylindrical sumps have a capacity of 58 gallons, are 2 ft in diameter, and are 30 in. deep. The pipe and plate sections of the sump are both constructed of Type 304L stainless steel, while the grating material is either Type 304L or 316L. The process condensate vessel area sump pumps (DEP-PMP-00035A/B) are permanently installed electrical units submerged within the sumps that transfer the sump contents to the process condensate lag storage vessels (DEP-VSL-00005A/B). The pumps have a maximum capacity of 120 gpm, discharge effluent at 47.2 psig, are powered by 10 hp, 3 phase/60 Hz/460 V induction motors, and are constructed of Type 316 stainless steel. The effluent discharged from the pumps passes through the process condensate vessel area sump pump filter (DEP-FILT-00006) to remove particles larger than 5 microns. The supply line to the filter is equipped a PSV to protect the filter from over-pressurization.

4.1.1.2.4.6 Truck Bay Sump (DEP-SUMP-00008)

Refer to:	24590-BOF-DD-25-00014	*Effluent Management Facility 24" Dia. Sump with Grate Cover Sections and Details*
	24590-BOF-M6-DEP-00009003	*P&ID – BOF/EMF Direct Feed LAW EMF Process System – Miscellaneous Sumps DEP-SUMP-00008*
	24590-BOF-M6C-DEP-00001	*DEP Sump, Sump Pump and Pipeline Sizing*
	24590-BOF-MPD-DEP-00010	*Mechanical Data Sheet: Vertical Submersible Centrifugal Pumps*

The truck bay sump (DEP-SUMP-00008) collect spills and leaks that occur in the truck unloading area (E-0108). The sump is located on west wall of this area at the ground elevation of the LAW effluent process building. The cylindrical sump has a capacity of 58 gallons, is 2 ft in diameter, and is 30 in. deep. The pipe and plate sections of the sump are both constructed of Type 304L stainless steel, while the grating material is either Type 304L or 316L. The truck bay sump pump (DEP-PMP-00038) is a permanently installed electrical unit submerged within the sump that transfers the sump contents to the low point drain vessel (DEP-VSL-00001). The pump has a maximum capacity of 120 gpm, discharges effluent at 47.2 psig, is powered by 10 hp, 3 phase/60 Hz/460 V induction motor, and is constructed of Type 316 stainless steel.

4.1.1.2.4.7 Leak Detection Boxes (DEP-LDB-00001 Through DEP-LDB-00006)

Refer to:	24590-BOF-M6-DEP-00011001	*P&ID – BOF/EMF Direct Feed LAW EMF Process System – Effluent Facility Leak Detection DEP-LDB-00001 Thru DEP-LDB-00006*
	24590-BOF-MX-DEP-00011001	*Equipment Assembly BOF/EMF Direct Feed LAW EMF Process System Effluent Facility Leak Detection DEP-LDB-00001 Through DEP-LDB-00006*

The DEP system leak detection boxes (DEP-LDB-00001 through DEP-LDB-00006) are located in the drain tank cell (ED-B001) of the drain tank building and provide the capability of detecting leaks in the primary containment of coaxial underground transfer lines. The following transfer lines are provided with this capability:

- The Tank Farms return from the DEP system effluent cooler (DEP-LDB-00001)
- The TOC feed to the EMF (DEP-LDB-00002)
- The combined TOC and DEP system feed from the EMF to the LAW Facility (DEP-LDB-00003)
- The LAW RLD system to DEP-VSL-00002 (DEP-LDB-00004)
- The LAW LVP system to DEP-VSL-00004A/B (DEP-LDB-00005)
- The Lab RLD system to DEP-VSL-00002 (DEP-LDB-00006)

The leak detection boxes include level instrumentation that initiates various system responses when liquid is present in the boxes. The drain plug in the box is installed in the closed position to create a detectable level. Upon level detection, the operator uses rods that extend up to the (-)22'-6" elevation to remotely lift the plugs and drain the box to the low point drain vessel sump (DEP-SUMP-00001). An overflow plug is also provided and installed in the open position to provide overflow protection. The leak detection boxes are also equipped with quick connections for pneumatic testing of the box and pipe jacket with air from the PSA system utility station in the drain tank cell. The units are each constructed of Type 316L stainless steel.

4.1.1.2.4.8 Sump Sampling Pumps (DEP-PMP-00042A/B)

Refer to:	24590-BOF-M6-DEP-00012001	*P&ID – BOF/EMF Direct Feed LAW EMF Process System – Sampling Pumps DEP-PMP-00042A/B*
	24590-BOF-M6C-DEP-00016	*EMF DEP-SUMP-00004A/B Sampling System Design*
	24590-BOF-MPC-DEP-00014	*EMF DEP Sampling Pumps (DEP-PMP-00042A/B) Sizing*
	24590-BOF-MPD-DEP-00020	*BOF/EMF DEP Sampling Pumps*

The sump sampling pumps (DEP-PMP-00042A/B) are located adjacent to the feed vessel area sump pumps (DEP-PMP-00034A/B) and convey liquid contained in the feed vessel area sumps (DEP-SUMP-00004A/B) to DEP-HOOD-00001 for sampling. When the accumulation of liquids due to small leaks, spills, or precipitation is detected in DEP-SUMP-00004A/B, the fluid is sampled to determine the composition and cause. The primary sump pumps cannot be used to support this sampling as their flow rate is too high for small volumes.

The sump sampling pumps are operated manually from panels (DEP-PNL-00002/00003) located near DEP-HOOD-00001 in the east evaporator process area (E-0102). The pumps can be run in reverse to drain the transfer line when the sampling is complete. The sampling pumps also have the capability to be operated to minimize the residual liquid in the sumps when the level in the sumps is too low for DEP-PMP-00034A/B. The peristaltic pumps have a capacity of 0.1 gpm, discharge effluent at 7.14 psig, are powered by 0.5 hp, 3 phase/60 Hz/460 V induction motors (DEP-MTR-00042A/B), and are constructed of Type 316L stainless steel.

4.1.1.2.4.9 Underground Waste Transfer Lines

Refer to:	24590-BOF-M6-RLD-00012001	*P&ID – BOF Radioactive Liquid Waste Disposal System Underground Transfer Lines*
	24590-BOF-M6-RLD-00012002	*P&ID – BOF Radioactive Liquid Waste Disposal System Underground Transfer Lines*
	24590-PTF-M6-PWD-00058002	*P&ID – PTF Plant Wash and Disposal System Underground Transfer Lines*

The underground waste transfer lines installed to support the DFLAW configuration are coaxial lines constructed of a stainless steel primary pipe, with a carbon steel encasement pipe for secondary containment. A fusion bonded epoxy coating is applied to the exterior surface of the encasement piping, followed by rigid polyurethane foam insulation. At final installation, a non-metallic jacket or thermoplastic barrier made of high density polyethylene is added to the pipe to provide a waterproof barrier. Cathodic protection is not needed for these transfer lines because the system is constructed of corrosion-resistant materials which isolate the pipe from the soil and moisture. There are eight underground waste transfer lines used for the operation of the DFLAW configuration, summarized in Table 4-1, below.

Table 4-1 DFLAW Underground Waste Transfer Lines

Line Number	Origin	Destination	Description
DEP-PB-00009-S32B-03	WTP Interface Node 13	ED-B001	Treated low-activity waste feed from the TOC to EMF which enables the ability to flush the line to DEP-VSL-00001 and to tie-in evaporator concentrate for recycle to the LAW Facility
DEP-ZS-00069-W31A-03	ED-B001	WTP Interface Node 14	Conditioned liquid effluent returned from the EMF to Tank Farms DSTs
LCP-PB-03368-S32B-03	ED-B001	LAW Facility	Combined feed from the TOC and the DEP system concentrate for vitrification in the LAW Facility. The portion of this line in BOF up until it is 5 ft outside the LAW Facility is included in the scope of this document.
RLD-WU-22142-S32B-03	Lab	ED-B001	Radioactive liquid effluent from RLD-VSL-00164 in the Lab. This transfer line is in the scope of the Lab RLD system.
RLD-ZS-66998-W31A-03	LAW Facility	ED-B001	SBS condensate collection from RLD-VSL-00005 in the LAW Facility. This transfer line is in the scope of the LAW RLD system.
LVP-ZY-00172-W31A-03	LAW Facility	ED-B001	Caustic scrubber blowdown from LVP-TK-00001 in the LAW Facility. This transfer line is in the scope of the LVP system.
RLD-ZS-66989-W31A-04 RLD-ZS-03382-W31A-04 RLD-ZS-03382-F10A-04	E-0106	WTP Interface Node 8A	Dilute evaporator effluent from DEP-VSL-00005A/B to LEFT/ETF (primary).
RLD-ZS-66991-W31A-03 RLD-ZS-03383-W31A-03 RLD-ZS-03383-F10A-03	E-0106	WTP Interface Node 8B	Dilute evaporator effluent from DEP-VSL-00005A/B to LEFT/ETF (backup).

4.1.1.3 DVP System Description

The DFLAW EMF Vessel Vent Process (DVP) system provides the nine major DEP system process vessels with filtered purge air and ventilates the vessel head space to prevent the accumulation of hydrogen in the vessels. Additionally, the DVP system removes non-condensable vapor from the evaporator system via DEP-COND-00003. The vessel vapors are combined in a common header, heated, filtered to remove particulates, and then exhausted to the ACV system where they are discharged to the atmosphere through the EMF stack. The DVP exhaust system consists of two 100% trains; one is placed in operation while the other serves as a standby. For an overview of the DVP system in relation to the DEP and ACV systems, refer to Figure 4-4.

Figure 4-4 DVP System Overview

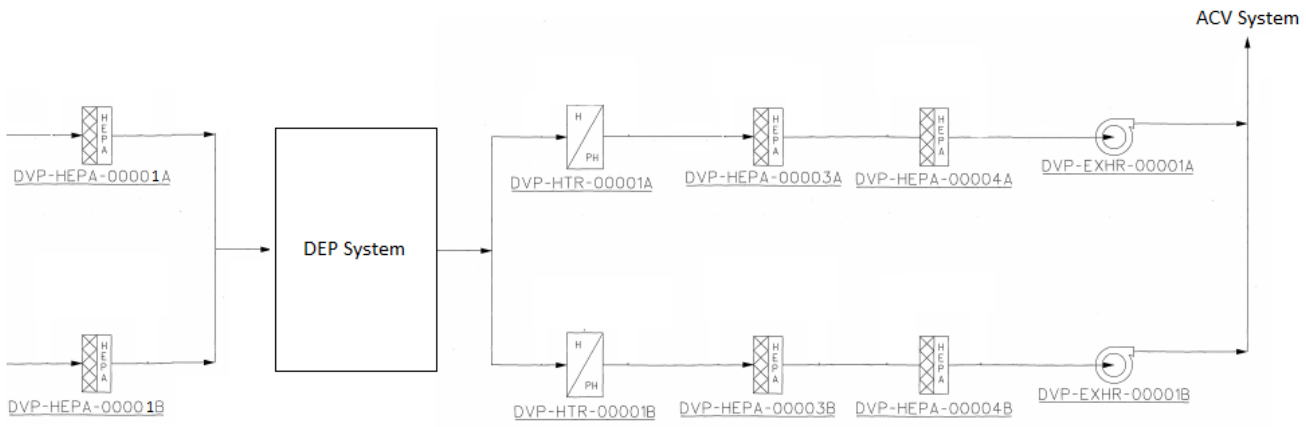

4.1.1.3.1 Process Ventilation Air Supply HEPA Filters (DVP-HEPA-00001A/B)

Refer to:	24590-BOF-M6-DVP-00001001	*P&ID – BOF/EMF Direct Feed LAW EMF Vessel Vent Process System DVP-EXHR-00001A/B*
	24590-BOF-MAC-DVP-00001	*DFLAW EMF Vessel Vent Process System (DVP) HEPA Filter, Preheater, and Exhaust Fan Sizing*
	24590-BOF-MKD-DVP-00005	*HEPA Filter Data Sheet for Process Ventilation Air Supply HEPA Filters (DVP-HEPA-00001A/B)*

The process ventilation air supply HEPA filters (DVP-HEPA-00001A/B) are located in the east evaporator process area (E-0102) and serve as the intake filters for the DVP system. C3 area air is drawn in through the filters and distributed to the low point drain vessel (DEP-VSL-00001), the evaporator feed vessel (DEP-VSL-00002), the evaporator concentrate vessels (DEP-VSL-00003A/B/C), the overhead sampling vessels (DEP-VSL-00004A/B), and the process condensate lag storage vessels (DEP-VSL-00005A/B). Each filter housing contains one 100% HEPA filter and normally only one housing/filter is placed in service at a time. The 99.97% efficiency circular filters are designed to ASME AG-1 (Section FK, Type 3) and are rated for a maximum flow of 250 acfm. The filter frame is constructed of Type 304L stainless steel.

4.1.1.3.2 Process Ventilation Preheaters (DVP-HTR-00001A/B)

Refer to:	24590-BOF-M6-DVP-00001001	*P&ID – BOF/EMF Direct Feed LAW EMF Vessel Vent Process System DVP-EXHR-00001A/B*
	24590-BOF-MAC-DVP-00001	*DFLAW EMF Vessel Vent Process System (DVP) HEPA Filter, Preheater, and Exhaust Fan Sizing*
	24590-BOF-MED-DVP-00001	*Process Ventilation HEPA Filter Preheater*

The process ventilation preheaters (DVP-HTR-00001A/B) are located on DVP-SKID-00001 in the east evaporator process area (E-0102) and heat the air ventilated from the DEP system process vessels and DEP-COND-00003 before it enters the primary and secondary HEPA filters (DVP-HEPA-00003A/B and DVP-HEPA-00004A/B). The air is preheated to limit the relative humidity to 40% to prevent degradation of the HEPA filters due to moisture. The circulation immersion heaters have a maximum output of 3 kW, are constructed of Type 316/316L stainless steel, and are designed to ASME AG-1 and ASME Section VIII, Division 1. Pressure safety valves are included on the supply piping to the preheaters to protect the units and the downstream HEPA filters

from over-pressurized ventilation exhaust. The supply piping also includes a utility station connection to flush the piping upstream of DVP-HEPA-00003A/B with demineralized water upon contamination.

4.1.1.3.3 Process Ventilation HEPA Filters (DVP-HEPA-00003A/B and DVP-HEPA-00004A/B)

Refer to:	24590-BOF-M6-DVP-00001001	*P&ID – BOF/EMF Direct Feed LAW EMF Vessel Vent Process System DVP-EXHR-00001A/B*
	24590-BOF-MAC-DVP-00001	*DFLAW EMF Vessel Vent Process System (DVP) HEPA Filter, Preheater, and Exhaust Fan Sizing*
	24590-BOF-MKD-DVP-00006	*HEPA Filter Data Sheet for Process Ventilation Primary HEPA Filters (DVP-HEPA-00003A/B) and Secondary HEPA Filters (DVP-HEPA-00004A/B)*

The process ventilation primary and secondary HEPA filters (DVP-HEPA-00003A/B and DVP-HEPA-00004A/B) are located in the HEPA filter room (E-0102A) and remove particulates before DEP system process vessel and DEP-COND-00003 vapor is discharged to the atmosphere. Each filter housing frame is constructed of Type 304L stainless steel and includes an injection port and two sample ports for testing. The filter housings contain one 100% HEPA filter and normally only one filter train is placed in service at a time (i.e., DVP-HEPA-00003A/DVP-HEPA-00004A or DVP-HEPA-00003B/DVP-HEPA-00004B). The 99.97% efficiency circular filters are designed to ASME AG-1 (Section FC, Size 9) and are rated for 250 scfm.

4.1.1.3.4 Process Ventilation Exhausters (DVP-EXHR-00001A/B)

Refer to:	24590-BOF-M6-DVP-00001001	*P&ID – BOF/EMF Direct Feed LAW EMF Vessel Vent Process System DVP-EXHR-00001A/B*
	24590-BOF-MAC-DVP-00001	*DFLAW EMF Vessel Vent Process System (DVP) HEPA Filter, Preheater, and Exhaust Fan Sizing*
	24590-BOF-MAD-DVP-00001	*Process Ventilation Exhauster*

The process ventilation exhausters (DVP-EXHR-00001A/B) are located in the east evaporator process area (E-0102) and vent the filtered DEP system vapor to the EMF stack via the ACV system ductwork. The exhausters are 100% capacity units that operate on a rotating basis; one is placed in operation while the other serves as a standby. Discharge valves are provided downstream of each exhauster and are closed when their associated exhauster is in the standby mode to maintain a constant flow path. Each exhauster is provided with an adjustable speed drive to vary the fan speed to compensate for filter loading. The adjustable speed drives control the 7.5 hp, 3 phase/60 Hz/460 V premium efficiency motors (DVP-MTR-00001A/B) that power each exhauster. DVP-EXHR-00001A/B are designed for a volumetric flow of 160 acfm, are direct drive, and are equipped with isolation springs. The units are each constructed of Type 316/316L stainless steel.

4.1.1.4 HVAC Systems Description

The HVAC systems that provide conditioned air to the EMF serve areas that are segmented into four contamination zones. These areas are classified by contamination zones C1, C2, C3, and C5 to establish a hierarchy for pressure control and decreased likelihood of contamination. The facility control philosophy for process and utility areas uses a cascading ventilation system wherein air cascades from areas of less potential for contamination to areas of greater potential for contamination to provide confinement of contamination at or near the source. C1 areas not supplied by the ACV system have no direct interface with process or utility areas (i.e., no credible potential for exposure to contamination), and therefore receives conditioned air and ventilation from the C1V system, which is independent of the ACV system. Cascade airflow is not utilized in areas served by the C1V system due to the lack of potential for exposure to source contamination. The EMF HVAC systems provide

heating, cooling, and humidification in support of maintaining the internal design conditions tabulated below in Table 4-2.

Table 4-2 EMF Internal Design Conditions

Area	Minimum Temperature	Maximum Temperature	Relative Humidity
Internal unoccupied C2 areas (1) (3)	59°F	80°F	10% minimum
Electrical equipment rooms (1)	50°F	95°F	
Plant rooms (1)	50°F	95°F	
Internal C5 areas (2)	59°F	113°F	
C1 control/computer rooms	68°F	75°F	40% - 55%
Battery Rooms	72°F	77°F	
LAW Effluent Utility Building	59°F	95°F	10% minimum
LAW Effluent Process and Drain Tank Buildings C3 Areas	59°F	104°F	10% minimum
LAW Effluent Drain Tank Building Chase	40°F	135°F	
LAW Effluent Process Building AFR Skid Room	40°F	90°F	

(1) The indicated maximum temperature is for normal operation. During maintenance and surveillance activities, the maximum temperature is lower as required for worker protection requirements.
(2) The indicated maximum temperature does not apply to process areas where high radiation heat transfer loads make it impractical to attain this temperature.
(3) The indicated relative humidity value is for instrumentation requirements only.

4.1.1.4.1 ACV System Description

The ACV system utilizes the cascade principle with the direction of airflow from areas of low or no contamination to areas of higher potential contamination. Conditioned air supplied to the process and utility areas of the EMF cascades through the C1/C2/C3/C5 zones and exits via the ACV system filtered exhaust. The vessels, piping, and vessel ventilation act as the primary confinement while the HVAC system provides secondary confinement for the EMF. Confinement of any potential contamination within the fume hood sampling area is provided by the ACV system, which maintains a constant exhaust flow rate.

4.1.1.4.1.1 Supply Air Handling Units (ACV-AHU-00001A/B)

Refer to:	24590-BOF-M8-ACV-00001001	*BOF/EMF Utility/Process Buildings Plant Room V&ID ACV Supply System*
	24590-BOF-M8-ACV-00001008	*BOF/EMF Utility/Process Buildings Plant Room V&ID Indirect/Direct Evaporative Cooler Controls*
	24590-BOF-M8C-ACV-00003	*DFLAW EMF Supply Fan, Exhaust Fan, and Transfer Duct Sizing*
	24590-BOF-M8C-ACV-00004	*EMF ACV System Equipment Calculation*
	24590-BOF-MAD-ACV-00001	*24590-BOF-MA-ACV-AHU-00001A/B – ACV Supply Air Handling Unit*

The ACV system supply air handling units (ACV-AHU-00001A/B) are located outdoors between the LAW effluent process building and the LAW effluent utility building. The 100% capacity AHUs (one in operation, the other on standby) are evaporative cooling type units that condition and supply air throughout the process and utility areas in the EMF. Each AHU has a primary and secondary air stream. When the aluminum intake damper on the primary supply side is opened, outside air is drawn into the AHUs through a ¾-inch bird screen. If necessary, the outside air is first preheated for freeze protection using distributing-type steam coils supplied with steam from the LPS system. The primary air stream then passes through a filter bank consisting of both low (30-59%) and high (86-95%) efficiency filters that are installed in metal mounting frames. After the air is filtered, the primary supply fans provide the motive force to convey the air at the design flow rate through the remaining portions of the AHU and the ACV system. Depending on the temperature and humidity of the primary air stream, two flow control dampers determine the amount of air that passes through the evaporative cooling portion of the AHU. If additional cooling adjustment is required to meet the indoor design conditions of the EMF, then a secondary air stream is used to cool the primary supply air stream using the direct evaporative cooler and an energy recovery wheel. The secondary air stream is pulled into the AHU through the secondary inlet louvers via two scavenger fans. If cooling is not required, then the primary air stream bypasses this section of the AHU and is supplied directly to the reheat steam coils. Like the preheat coils, the reheat coils are also supplied with steam from the LPS system. After the air is conditioned, it passes through the discharge damper of the AHU into the supply ductwork of the ACV system.

4.1.1.4.1.2 Unit Heaters (ACV-UH-00003A/B/C/D/E and ACV-UH-00004A/B)

Refer to:	24590-BOF-M8-ACV-00001004	*BOF/EMF Evaporator Process Building – Volumetric V&ID ACV System*
	24590-BOF-M8C-ACV-00003	*DFLAW EMF Supply Fan, Exhaust Fan, and Transfer Duct Sizing*

The ACV system unit heaters, ACV-UH-00003A/B/C/D/E and ACV-UH-00004A/B, provide supplemental heating in the east evaporator process area (E-0102) and the drain tank maintenance area (ED-0102), respectively, due to the limitation of the maximum supply air temperature of the AHUs. Each unit heater in the east evaporator process area has a total heating capacity of 20 kW and each unit heater in the drain tank maintenance area has a total heating capacity of 5 kW.

4.1.1.4.1.3 HEPA Filters (ACV-HEPA-00001A/B/C/D/E)

Refer to:	24590-BOF-M8-ACV-00001005	*BOF/EMF Utility/Process Buildings – Plant Room V&ID ACV Exhaust System*
	24590-BOF-M8-ACV-00001006	*BOF/EMF Utility/Process Buildings – Plant Room V&ID ACV Exhaust System*
	24590-BOF-MKC-ACV-00001	*DFLAW EMF ACV HEPA Filter Housing Design Pressures and Maximum Allowable Leakage*
	24590-BOF-MKD-ACV-00001	*24590-BOF-MK-ACV-HEPA-00001A-E - Primary Stage (Stage 1), Type 1 Filter Housings for BOF/EMF ACV Exhaust System*

The ACV system HEPA filters (ACV-HEPA-00001A/B/C/D/E) are located in the filter room (EU-0102) of the LAW effluent utility building and remove particulates in the ACV system exhaust air before it is discharged to the atmosphere. Each filter housing frame is constructed of Type 304L stainless steel and includes an inlet aerosol injection port, an inlet sample port, and an outlet sample port. The filter housings contain four radial flow HEPA filters arranged in a two by two configuration. Although there are five filter banks included in the design, only

four are active while the fifth acts as a standby. The 99.97% efficiency filters are designed to ASME AG-1 and are each nominally rated for 2,000 acfm such that the housing as a whole is rated for a design flow of 8,000 acfm. The filters are bagged-out using the safe change procedure when the pressure drop across the filters becomes unacceptably high.

4.1.1.4.1.4 Exhaust Fans (ACV-FAN-00001A/B)

Refer to:	24590-BOF-M8-ACV-00001007	*BOF/EMF Utility/Process Buildings – Plant Room V&ID ACV Exhaust System*
	24590-BOF-M8C-ACV-00003	*DFLAW EMF Supply Fan, Exhaust Fan, and Transfer Duct Sizing*
	24590-BOF-M8C-ACV-00004	*EMF ACV System Equipment Calculation*
	24590-BOF-MAD-ACV-00002	*Exhaust Fan/Blower for Active Ventilation System*

The ACV system exhaust fans (ACV-FAN-00001A/B) are located in the utility room (EU-0101) of the LAW effluent utility building and provide the motive force to discharge the filtered ACV system through the EMF stack while maintaining the required room pressures to preserve a cascade airflow. The fans are 100% capacity units that normally operate with one in service and one on standby. Inlet and outlet dampers are provided for each exhaust fan. While the inlet dampers are normally open, the outlet dampers only open when their corresponding fan receives a start signal and must remain open throughout the operation of the unit. Each fan is provided with an adjustable speed drive to vary the fan speed to compensate for filter loading. The adjustable speed drives control the 150 hp, 3 phase/60 Hz/460 V induction motors (ACV-MTR-00002A/B) that power each exhaust fan. ACV-FAN-00001A/B are designed for a normal volumetric flow of 28,130 scfm, are direct drive, and are equipped with isolation springs.

4.1.1.4.1.5 Ventilation Stack

Refer to:	24590-BOF-M8C-C3V-00002	*EMF Stack Height Evaluation Calculation*
	24590-BOF-P1-26-00002	*Balance of Facilities LAW Effluent Utility Building & LAW Effluent Electrical Building General Arrangement Sections A & B*

The EMF ventilation stack is located on the east side of the LAW effluent utility building. The concrete structure is 150 ft tall, has an inner diameter of 38 in., and discharges air at a velocity above 2,500 fpm, which is the velocity recommended to prevent rainwater intrusion. The ACV system exhaust ductwork downstream of ACV-FAN-00001A/B has provisions for instrumentation and/or sampling to support the radiological monitoring that occurs before the exhaust stream is discharged to the atmosphere through the stack. The ACV system interfaces with the SDJ system for stack monitoring functions.

4.1.1.4.1.6 HVAC Fire Protection Features

Refer to:	24590-BOF-M0-25-00003	*Balance of Facilities LAW Effluent Process Bldg. & LAW Effluent Drain Tank Bldg. & LAW Effluent Utility Bldg. Wall Penetration Schedule*

The ACV system ductwork penetrates the 2-hour fire rated vertical barrier between the east and west evaporator process areas (E-0102 and E-0103) a total of four times. The ductwork penetrations in this fire barrier are provided with fire dampers that have a fire resistance rating that is consistent with the designated fire resistance rating of the barrier. ACV-FDPR-00002 is installed in the supply ductwork penetrating the fire barrier, ACV-FDPR-00003 and ACV-FDPR-00009 are installed in the transfer ducts between the rooms, and ACV-FDPR-

00005 is installed in the exhaust ductwork penetrating the fire barrier. Access doors are provided to allow the operator to reset the dampers.

The ductwork at the discharge from the AHUs contains smoke detectors that are wired to the fire alarm control panel. The smoke detectors are designed to shut down the AHUs via a hardwired interlock between the smoke detector contact and the associated fan motor ASD controller starter circuit.

4.1.1.4.2 C1V System Description

Refer to:	24590-BOF-M8-C1V-00002	*BOF/EMF Annex Areas Volumetric V&ID*
	24590-BOF-M8C-C1V-00004	*EMF C1V Area Heating and Cooling Equipment Sizing Calculation*

The AFR skid room (E-0103A), C&I room (E-0103B), drain tank building chase (EDCH01), fire riser rooms (ED-0103, EU-0103, E-0101A), and the LAW effluent electrical building at the EMF are classified as C1 areas and do not interface with the ACV system for HVAC functions. These rooms have independent heating and/or cooling systems to meet the design requirements of the BOD. Because these areas are normally unoccupied except during maintenance activities, no ventilation or outside air is required. Table 4-3 summarizes the equipment provided in these locations.

Table 4-3 C1V System Equipment at the EMF

Room	Equipment	Capacity	Reference Document
Fire Riser Room – Building 25 (E-0101A)	C1V-UH-00111	1 KW (electric heating)	TBD
AFR Skid Room (E-0103A)	C1V-FCU-00050 C1V-COND-00034	24,000 Btu/h (DX cooling) 1 KW (electric heating)	24590-BOF-MAD-C1V-00009 24590-BOF-MED-C1V-00008
Electrical C&I Room (E-0103B)	C1V-FCU-00051 C1V-COND-00035	18,000 Btu/h (DX cooling) 3 KW (electric heating)	24590-BOF-MAD-C1V-00010 24590-BOF-MED-C1V-00010
Fire Riser Room – Building 25A (ED-0103)	C1V-UH-00110	1 KW (electric heating)	TBD
Drain Tank Building Chase (EDCH01)	C1V-FCU-00049	20 KW (electric heating)	24590-BOF-MAD-C1V-00011
Fire Riser Room – Building 26 (EU-0103)	C1V-UH-00112	1 KW (electric heating)	TBD
LAW effluent electrical building UPE battery room (TBD)	C1V-FAN-27001 C1V-PNL-27001 C1V-ANN-27001	TBD	24590-BOF-3PS-EKL1-T0001

4.1.2 Facility/Process Boundaries and Interfaces

Refer to Section 2.3 of this document for a detailed table of interfaces and boundaries.

4.1.3 Physical Layout and Location

The Effluent Management Facility is comprised of buildings 25, 25A, 26, and 27 located on the north side of the WTP site. These buildings house the DEP, DVP, HVAC, and utility system equipment required for the operation of the DFLAW configuration. Additionally, the DEP system includes the underground waste transfer lines associated with DFLAW operations. Refer to 24590-BOF-P1-50-00001, *RPP-WTP Plot Plan*, for additional information on the overall WTP site layout. The EMF location relative to the WTP site is shown in Figure 4-5.

Figure 4-5 Effluent Management Facility Location

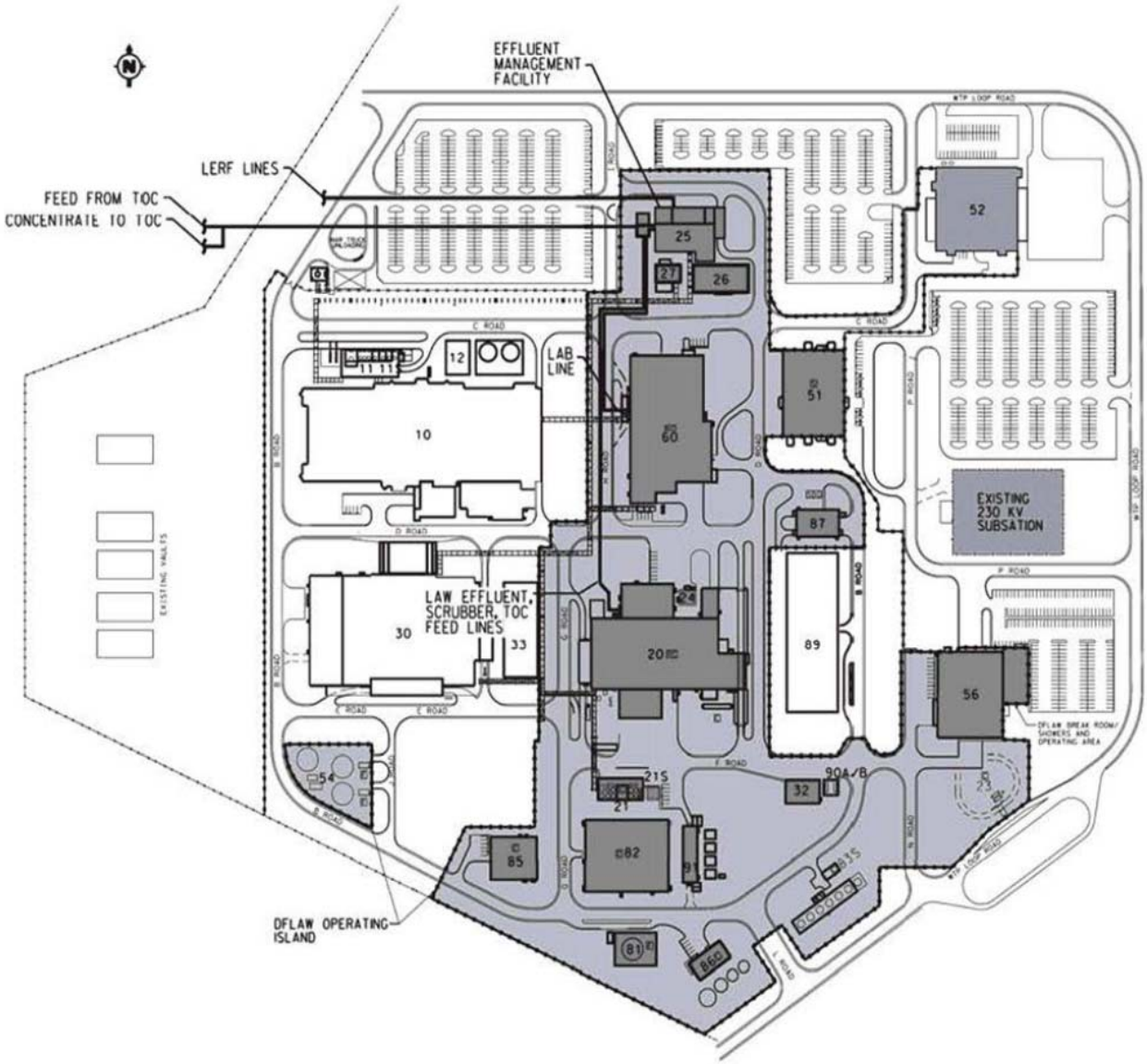

4.1.3.1 Effluent Management Facility

For the location of specific DEP, DVP, utility, and HVAC system equipment, refer to the following general arrangement drawings:

- 24590-BOF-P1-25-00003, *Balance of Facilities LAW Effluent Process Bldg. & LAW Effluent Drain Tank Bldg. Equipment Location Drawing Plan at Elev. 0 Foot – 0 Inches – Area 1*
- 24590-BOF-P1-25-00004, *Balance of Facilities LAW Effluent Process Bldg. & LAW Effluent Drain Tank Bldg. Equipment Location Drawing Plan at Elev. 0 Foot – 0 Inches – Area 2*
- 24590-BOF-P1-26-00003, *Balance of Facilities LAW Effluent Utility Building Equipment Location Drawing Plan at Elev. 0 Foot – 0 Inches*

4.1.3.1.1 LAW Effluent Electrical Building (Building 27)

The electrical building is a vendor-supplied, single-story structure located (+) 6’- 0” above the grade foundation. This building is approximately 36 ft wide by 53 ft long and includes the following rooms:

- The electrical equipment room houses the electrical substation used to step down the 13.8kV utility voltage to 480V and distribute power to the process systems in the EMF.
- The battery room houses the UPE system battery that supplies power to the EMF equipment during a loss of site power event. This room also includes a dedicated exhaust fan to mitigate the potential for hydrogen accumulation in the room.
- The C&I room contains the electrical equipment that supports the monitoring and control functions of the process systems at the EMF.

Figure 4-6 LAW Effluent Electrical Building Conceptual Layout

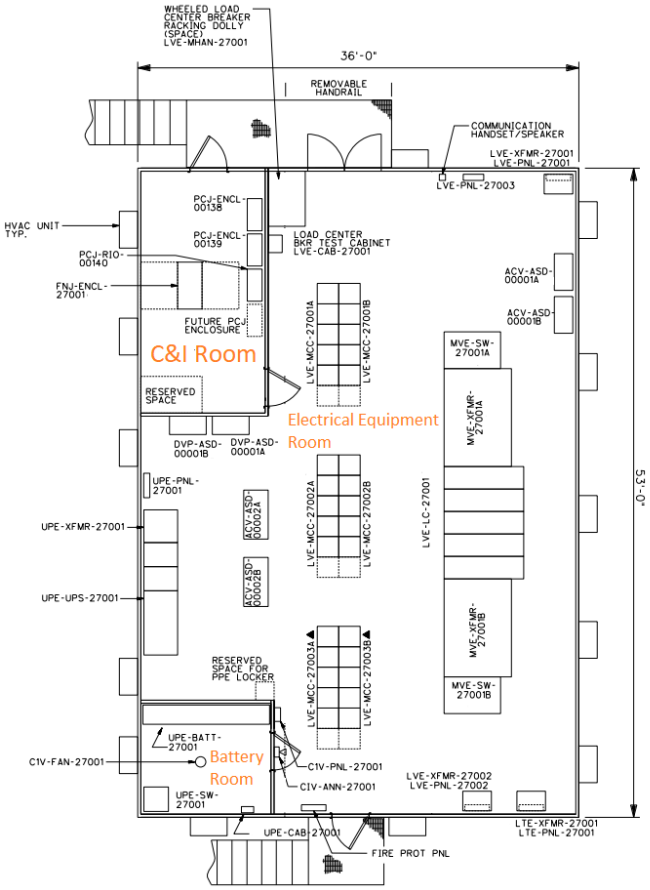

4.1.3.1.2 LAW Effluent Utility Building (Building 26)

The utility building is a single-story, steel frame and metal panel structure located at ground level to the east of the LAW effluent electrical building. This building is approximately 112 ft long, 70.5 ft wide, 28 ft tall, and includes the following rooms:

- The utility room (EU-0101) contains the utility system equipment used in support of the EMF process and ventilation systems, as well as the ACV system exhaust fans (ACV-FAN-00001A/B).
- The filter room (EU-0102) contains the ACV system HEPA filter banks (ACV-HEPA-00001A/B/C/D/E).
- The fire riser room (EU-0103) is located on the east side of the building
- The ventilation system exhaust stack is located outside of the northeast corner of the building.

Figure 4-7 LAW Effluent Utility Building Layout

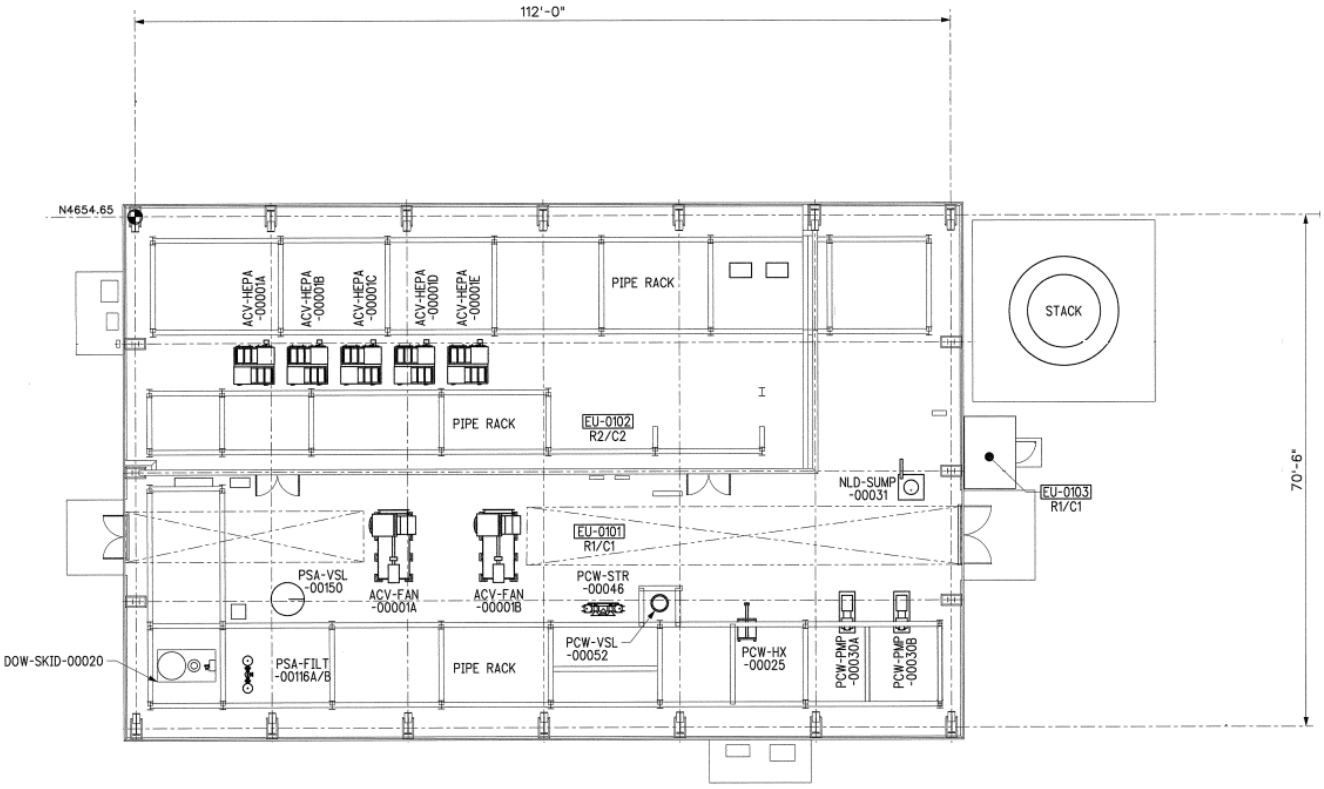

4.1.3.1.3 LAW Effluent Process Building (Building 25)

The LAW effluent process building is a single-story steel frame and concrete structure located at ground level to the north of the LAW effluent utility and electrical buildings. This building includes the following rooms:

- The sub-change (E-0101) is located at grade in the southeast corner of the building and provides the space for operators to change into personal protective equipment when moving between C2 and C3 areas. The room is normally accessible from the outside via a staircase located on the south side of the LAW effluent process building.
- The fire riser room (E-0101A) is located at grade on the south side of the building, outside of the main concrete shell.
- The east evaporator process area (E-0102) is the largest room in the building and is located at grade in the southeast quadrant of the building. This C3 area mainly consists of the DEP system equipment that handles dilute evaporator effluent and the DVP system preheaters and exhausters.
- The HEPA filter room (E-0102A) is located at an elevation of 9 ft 8 in. in the southeast corner of the building and contains the DVP system HEPA filter trains.
- The west evaporator process area (E-0103) is located at grade in the southwest quadrant of the building. This C5 area houses the DEP system evaporator and its supporting equipment.
- The AFR skid room (E-0103A) is located at grade on the south side of the building, outside of the main concrete shell. This room contains the AFR system skid that supplies anti-foam reagent to the DEP system evaporator.

- The C&I room (E-0103B) is located at grade on the south side of the building, outside of the main concrete shell. This room contains the control and electrical system panels and enclosures supporting the EMF process systems.
- The airlock (E-0104) is located at an elevation of 6 ft in the southwest corner of the building and acts as the emergency exit in the event that rapid evacuation of the process area is required during maintenance activities.
- The feed tank area (E-0105) is located at grade in the northwest corner of the building. This outdoor area is surrounded by concrete shield walls due to the radioactive liquid contained in the DEP system feed and concentrate vessels.
- The process condensate tank area (E-0106) is located at grade on the north side of the building. This outdoor area houses the DEP system vessels containing dilute evaporator effluent.
- The chemical storage area (E-0107) is located at grade on the north side of the building. This outdoor area contains the SHR and SNR system equipment used to support the DEP system process.
- The truck unloading area (E-0108) is located on the east end of the building. This covered area supports the receipt of chemical reagents and contains a monorail hoist to facilitate equipment replacement.

Figure 4-8 LAW Effluent Process Building Layout

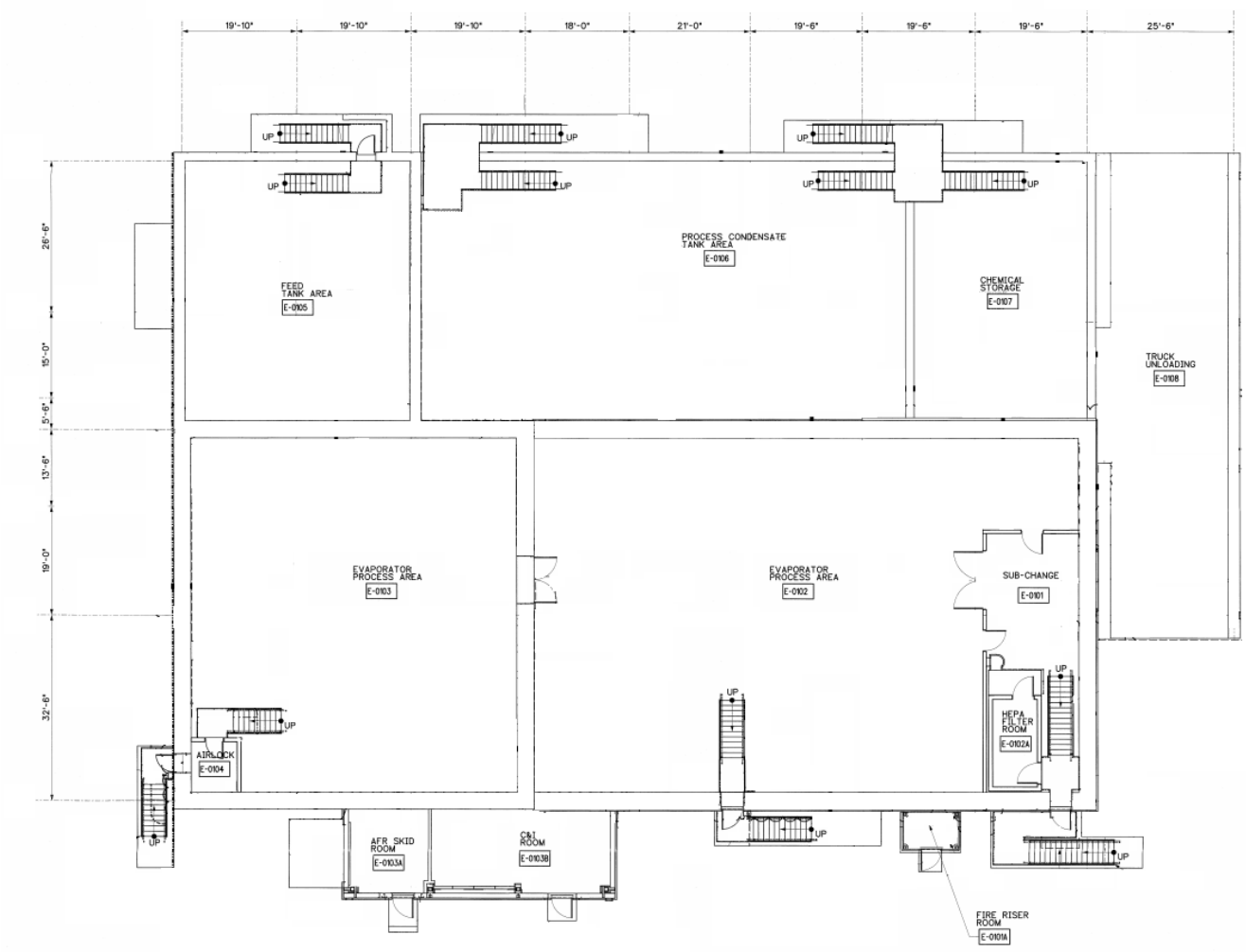

4.1.3.1.4 LAW Effluent Drain Tank Building (Building 25A)

The LAW effluent drain tank building is located to the west of the LAW effluent process building. This two-story, steel-paneled building includes the following rooms:

- The drain tank cell (ED-B001) is located at an elevation of −39 ft and houses the low point drain vessel and the DEP system leak detection boxes. This area is surrounded by concrete shield walls due to the radioactive mixed waste effluent contained in the low point drain vessel.
- The drain tank maintenance area (ED-0102) is located at grade above the drain tank cell and provides the space necessary to perform maintenance on the low point drain vessel. This C3 area contains a hoist to facilitate maintenance activities.
- The sub-change (ED-0101) is located at grade on the north side of the building and provides the space for operators to change into personal protective equipment when moving into the drain tank maintenance area.
- The fire riser room (ED-0103) is located on the west side of the building.
- The LAW effluent drain tank building chase (EDCH01) is a concrete structure that provides radiological shielding of the DEP system piping that runs between the LAW effluent drain tank building and the LAW effluent process building.

Figure 4-9 LAW Effluent Drain Tank Building Layout & Elevation

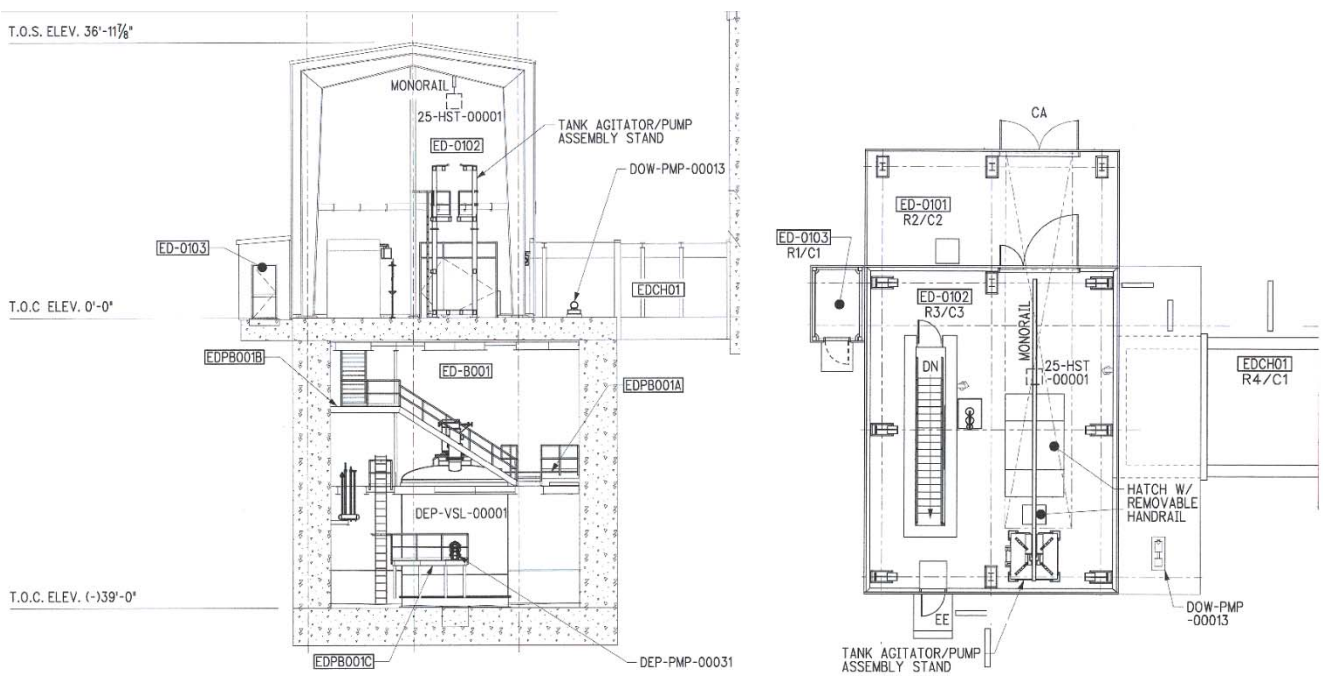

4.1.4 Principles of Operation

4.1.4.1 EMF Facility Operations

The EMF is capable of supporting the following modes and states: startup mode, normal operation, off-normal operation, and shutdown. The EMF modes and status are normally driven by the modes and status of the LAW melters.

4.1.4.1.1 Startup Mode

Startup or restart of the EMF in the DFLAW configuration requires realignment of the TOC feed supply valves and the LAW Facility and Lab effluent discharge valves. Utility isolation from the PT Facility and HLW Facility is required until these facilities are operational. An operations readiness review is required preceding startup or restart of the EMF following a prolonged shutdown.

4.1.4.1.2 Normal Operations

Normal operations are defined as the operating conditions in which all EMF internal systems, and external interfacing systems, are operational and functioning without limitations to achieve the design throughput for the LAW Facility of 30 MTG per day. The EMF introduces feed to the evaporator and separates the waste via evaporation. The dilute waste is sent to LERF/ETF and the concentrated waste is sent to the LAW LCP system or Tank Farm DSTs. Normal operations include routine activities, such as flushing of transfer piping, performed in conjunction with effluent processing activities.

4.1.4.1.3 Off-Normal Operations

The EMF is in off-normal operation when the evaporator is unavailable and all waste (feed or secondary effluents) from the TOC, the LAW Facility, and/or Lab is returned to Tank Farm DSTs.

4.1.4.1.4 Shutdown Mode

The EMF is in shutdown mode when all processing of LAW and Lab waste has stopped and waste transfers out of the facility have stopped. The EMF is in shutdown mode any time the PT and HLW facilities are in operation. The system may be placed in a long-term layup state and returned to service if the PT Facility is unavailable. The process areas are placed in a stable condition that is unlikely to challenge limiting conditions for operation (LCO) or to result in an uncontrolled release of hazardous chemical or radioactive material. Maintenance activities may be performed unless prohibited by an LCO.

4.1.4.2 DEP System Normal Operations

The DEP system utilizes an evaporator to concentrate received waste and recycle the resulting concentrate to the LAW Facility in combination with the TOC feed for glass production. Recycling waste causes build-up in the recycle loop until steady state conditions are achieved. The evaporator condensate and LVP system stream (caustic scrubber) are blended and transferred to LERF/ETF after qualification in accordance with ICD-06. Refer to Figure 4-10 for an overview of the DEP system process.

Figure 4-10 DEP System Process Overview

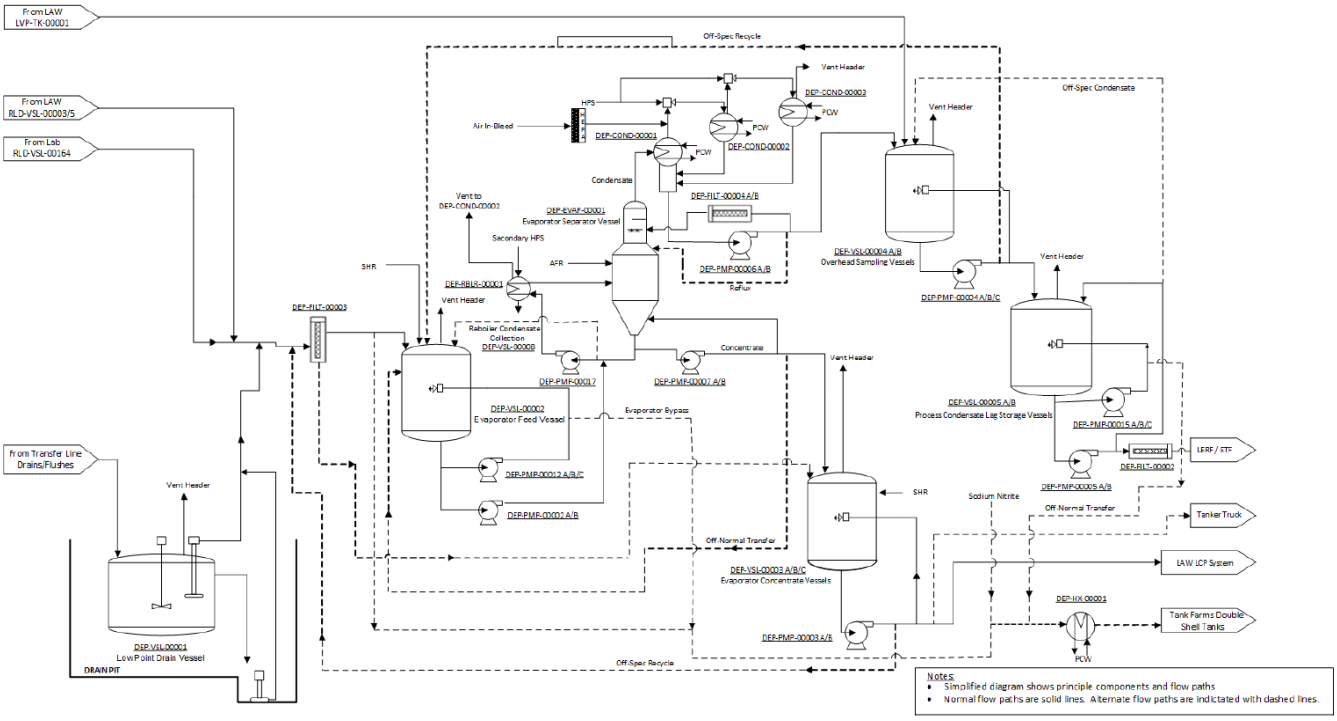

The EMF has the following major feeds during normal operating conditions:

- Radiological waste from Lab RLD system vessel RLD-VSL-000164 to the DEP system
- Radiological waste (SBS condensate and plant wash vessel contents) from LAW RLD system vessels RLD-VSL-00003/00005 to the DEP system
- Caustic scrubber fluids from LAW LVP system tank LVP-TK-00001 to the DEP system
- Vitrification feed from the TOC and the DEP system to the LAW Facility

After each of the waste transfers listed above, the underground transfer pipe is flushed with water to remove the remaining contents. The flush water is drained to the low point drain vessel (DEP-VSL-00001), which stores up to 10 transfers in a 48-hour time cycle. Once the cycle time has elapsed, the vessel contents are transferred by the low point drain vessel pumps (DEP-PMP-00001A/B) to the evaporator feed vessel (DEP-VSL-00002) through the evaporator feed pre-filter (DEP-FILT-00003). The vessel contents are mixed with an agitator both prior to and during this transfer to maintain the suspension of solids within the vessel.

DEP-VSL-00002 receives filtered effluent streams in batches for staging prior to evaporation. Sources of the filtered effluent through DEP-FILT-00003 include radiological waste from the LAW RLD system plant wash and SBS condensate collection vessels (RLD-VSL-00003/00005), radiological waste from the Lab RLD system C3 collection vessel (RLD-VSL-00164), and contents from DEP-VSL-00001. The pressure drop across DEP-FILT-00003 is continuously monitored and when the filter is sufficiently loaded, the captured solids are back-pulsed to the evaporator concentrate vessels (DEP-VSL-00003A/B/C) through a control sequence using air supplied by the PSA system.

The evaporator feed vessel recirculation pumps (DEP-PMP-00012A/B/C) are placed in service prior to receiving transfers in DEP-VSL-00002 for proper vessel mixing and to measure the pH of the solution. Sodium hydroxide from the SHR system is added to the vessel if the measured pH is less than 12 for more advantageous corrosion

conditions after each transferred input is received. Once the solution has been mixed and adjusted, the feed is continuously pumped by the evaporator feed vessel transfer pumps (DEP-PMP-00002A/B) from DEP-VSL-00002 to the high-flow recirculation loop of the evaporator (DEP-EVAP-00001). The level in the evaporator controls the flow of feed supplied to DEP-EVAP-00001 to maintain a constant liquid level in the evaporator.

The evaporator recirculation pump (DEP-PMP-00017) provides the motive force to continuously convey the feed introduced to the recirculation loop of DEP-EVAP-00001 to the DEP evaporator reboiler (DEP-RBLR-00001). The DEP evaporator reboiler heats the feed from DEP-VSL-00002 in combination with the bottom concentrate from DEP-EVAP-00001 and returns the effluent back to the DEP evaporator separator vessel. . DEP-RBLR-00001 utilizes steam from the HPS system secondary steam loop. As the saturated steam condenses against the tubes of the heat exchanger, the latent heat of vaporization is transferred to the process fluids contained within the tubes. The steam condensate from DEP-RBLR-00001 is collected in the reboiler condensate collection vessel (DEP-VSL-00008) and transferred to the SCW system by the reboiler condensate pumps (DEP-PMP-00008A/B). The conductivity of the condensate leaving DEP-RBLR-00001 is continuously monitored to detect low levels of breakthrough and if the conductivity limit is exceeded, the steam condensate is routed to DEP-VSL-00002 instead. The steam supply to DEP-RBLR-00001 is controlled by the temperature of the concentrate returned to DEP-EVAP-00001, such that the desired temperature produces the desired boiloff rate in the evaporator. The process stream from DEP-RBLR-00001 is introduced below the liquid level in DEP-EVAP-00001 and flashes as it rises (due to the temperature gradient of the evaporator liquid), creating vapor. The evaporator operates at a low vacuum generated by condensing the evaporator vapor and through the use of steam ejectors. This reduced pressure lowers the boiling point of the liquid in DEP-EVAP-00001. To prevent foaming, antifoam reagent is batch transferred from the AFR system tote to the evaporator.

The overhead vapors from DEP-EVAP-00001, mainly water, pass through a bubble cap tray to increase the vapor-liquid contact area, causing condensable vapors to fall back into the evaporator. An additional two layers of mesh pads are used to remove any remaining aerosols and particulates in the vapor. The lower mesh pad is continuously sprayed with process condensate to further cool the vapor and prevent the formation of solids, and the vapor continues on to the DEP evaporator primary condenser (DEP-COND-00001).. The evaporator gas is condensed in the shell side of the shell-and-tube heat exchanger, with process cooling water supplied to the tube side of the unit by the PCW system. The resulting condensate is gravity drained to the boot of DEP-COND-00001.

The DEP evaporator inter-condenser (DEP-COND-00002) and the DEP evaporator after-condenser (DEP-COND-00003) work with the first stage ejector (DEP-EJCTR-00001A/B) and second stage ejector (DEP-EJCTR-00002A/B) to create a vacuum in the evaporator separator vessel and enable low temperature flashing. The vapors from DEP-COND-00001 are pulled into the first stage ejector using a vacuum created by high pressure steam from the HPS system. The gases are entrained with the high velocity steam in the suction chamber of the ejector and transferred to DEP-COND-00002, in combination with non-condensable vapors from DEP-VSL-00008 and DEP-RBLR-00001. The condensate from DEP-COND-00002 drains to the boot of DEP-COND-00001. The vapors from DEP-COND-00002 are pulled into DEP-EJCTR-00002A/B using a vacuum created by high pressure steam from the HPS system. The gases are entrained with the high velocity steam in the suction chamber of the ejector and transferred to DEP-COND-00003. The condensate from DEP-COND-00003 drains to the boot of DEP-COND-00001. The non-condensable vapors in DEP-COND-00003 are pulled into the DVP system, which maintains the vacuum for the DEP process equipment. The total condensate collected in the boot of DEP-COND-00001 is primarily transferred to the overhead sampling vessels (DEP-VSL-00004A/B) using the DEP evaporator condensate pumps (DEP-PMP-0006A/B). This transfer is based on the level of the condensate contained within DEP-COND-00001. A portion of the condensate discharged from DEP-PMP-00006A/B is continuously recirculated through a filter back to DEP-EVAP-00001 to provide spray for the lower mesh pad.

The concentrate produced at the bottom of DEP-EVAP-00001 is primarily introduced into the high-flow reboiler recirculation loop, although a small portion is drawn through the evaporator concentrate discharge pumps (DEP-

PMP-00007A/B) for monitoring at the DEP evaporator metering station (DEP-SKID-00005). Once steady-state conditions are achieved and the specific gravity of the concentrate meets the pre-established target for the feed type measured at DEP-SKID-00005, the feed is bled off the recirculation loop and transferred to the evaporator concentrate vessels (DEP-VSL-00003A/B/C). This transfer is modulated to maintain the specific gravity setpoint of the concentrate.

DEP-VSL-00003A/B/C receive a continuous feed from DEP-PMP-00007A/B and a batch transfer from DEP-FILT-00003. After receiving the concentrates, the evaporator concentrate vessel transfer/recirculation pumps (DEP-PMP-00003A/B) operate to recirculate the vessel contents through eductors for mixing. Once the solution has been well mixed and solids have been suspended, a sample is taken at DEP-HOOD-00001 to confirm evaporator performance and to determine whether sodium hydroxide is needed from the SHR system for corrosion mitigation. Once the solution meets the applicable acceptance criteria, the contents of the evaporator concentrate vessels are mixed to suspend solids and recycled to the LCP system for combination with the waste feed stream from the TOC. The sequenced transfer system is designed to first convey concentrated DEP system effluent, followed by a transfer of feed from the TOC, with the combined feed pushed into the LCP system with flush water from the TOC.

DEP-VSL-00004A/B receive a continuous stream of condensate from DEP-COND-00001 and batch transfers of caustic scrubber effluent from the LAW LVP system caustic collection tank (LVP-TK-00001). After receiving the condensates, the overhead sampling vessel transfer/recirculation pumps (DEP-PMP-00004A/B/C) operate to recirculate the vessel contents through eductors for mixing and blending. Once the solution has been well mixed and any solids have been suspended, a sample is taken at DEP-HOOD-00001 to confirm that the waste acceptance requirements of LERF/ETF are met. Once these parameters are confirmed, the batch is sent to the process condensate lag storage vessels (DEP-VSL-00005A/B).

DEP-VSL-00005A/B receive multiple batches of process condensate from DEP-VSL-00004A/B. After receiving the condensates, the process condensate lag storage vessel recirculation pumps (DEP-PMP-00015A/B/C) operate to recirculate the vessel contents through eductors for mixing. Once the solution has been well mixed and any solids have been suspended, a sample is taken at DEP-HOOD-00001 to confirm that the effluent complies with the LERF/ETF treatability envelope. This sample is taken once every tenth batch if the initial five to ten batches of waste comply with the treatability envelope. After confirming the condensate characteristics, the vessel contents are once again mixed using DEP-PMP-00015A/B/C and then cycled through a second recirculation loop using the process condensate lag storage vessel transfer pumps (DEP-PMP-00005A/B). Inline monitoring of the flow rate, radiation, pH, and conductivity is provided while the solution recirculates in accordance with the requirements of ICD 06. The vessel contents are then transferred to LERF/ETF.

4.1.4.3 DVP System Normal Operations

The DVP system uses a passive system to supply purge air to the DEP system process vessels. C3 area air is drawn through the process ventilation air supply HEPA filters (DVP-HEPA-00001A/B) by air flow created by the process ventilation exhausters (DVP-EXHR-00001A/B) and enters the headspace of the vessels. The negative pressure created by DVP-EXHR-00001A/B draws air from the headspace of the vessels into an exhaust header through manually adjustable valves that are locked in position to provide the needed flow rates for proper system operation. Once the vessel exhaust is combined, the stream passes through the process ventilation preheater (DVP-HTR-00001A/B) to reduce the relative humidity of the vapor before it enters the process ventilation primary (DVP-HEPA-00003A/B) and secondary (DVP-HEPA-00004A/B) HEPA filters. After particulates are removed from the vessel exhaust, DVP-EXHR-00001A/B sends the resulting vapor to the ACV system exhaust duct for SDJ system monitoring before it is discharged to the atmosphere. The exhausters are controlled by ASDs that maintain a negative pressure throughout the DVP system.

4.1.4.4 ACV System Normal Operations

The ACV system uses air handling units (ACV-AHU-00001A/B) to supply 100% outdoor air to the process and utility areas of the EMF. The AHUs are typically automatically controlled based on the temperature and moisture of the air discharged from the unit. However, temperature indication is also provided in each room supplied by the ACV system to manually correct the setpoint of the AHU discharge temperature. Once one of the ACV system exhaust fans (ACV-FAN-00001A/B) is placed in operation, the supply fan of the AHU selected for duty is started and the inlet damper automatically opens. Upon receiving a signal that the supply fan is running, the discharge damper automatically opens. Conditioned air that is discharged from the AHU is directly supplied through ductwork to the utility room (EU-0101) and filter room (EU-0102) in the LAW effluent utility building, the sub-change in the LAW effluent drain tank building (ED-0101), and the sub-change (E-0101), airlock (E-0104), and east evaporator process area (E-0102) of the LAW effluent process building.

The drain tank maintenance area (ED-0102), drain tank cell (ED-B001), HEPA filter room (E-0102A), and the west evaporator process area (E-0103) are not directly supplied by the ACV system and instead receive cascaded air from adjacent rooms. Manual volume dampers are located throughout the supply ductwork and are positioned to maintain a negative system pressure and a cascading airflow. Differential pressure instruments are provided in each room that interfaces with the ACV system to assist in positioning these dampers. Supplemental unit heaters are provided in the east evaporator process area (ACV-UH-00003A/B/C/D/E) and the drain tank maintenance area (ACV-UH-00004A/B) due to the low supply air temperature used to ensure that the indoor summer temperature is not exceeded.

The ACV exhaust subsystem design is based on cascading air to the building rooms with the highest potential for contamination before entering the HEPA filters located in the LAW effluent utility building. In the LAW effluent process building, air cascades to the C5 west evaporator process area (E-0103) before it is routed to the system HEPA filters (ACV-HEPA-00001A/B/C/D/E) in combination with the exhaust from the fume hood space of DEP-HOOD-00001. In the LAW effluent utility building, air is cascaded to the C2 filter room (EU-0102) before it is combined with the exhaust from the LAW effluent process building upstream of the system HEPA filters. This combined stream passes through the four HEPA filters placed in operation before it is discharged to the atmosphere by ACV-FAN-00001A/B through the EMF stack.

4.1.4.5 C1V System Normal Operations

The C1V system consists of standalone HVAC units located in EMF areas that do not interface with the ACV system. The control and operation of these units is based on the HVAC subcontractor design and the required temperature range of the rooms in which they are installed.

4.1.5 System Reliability Features

4.1.5.1 DEP System Reliability Features

A redundant pump and transfer line is provided for DEP-VSL-00001 in the event of pump failure or maintenance to allow for continuous system operation. For pump protection, restriction orifices are installed on the recirculation (DEP-RO-00011) and transfer (DEP-RO-00010) lines.

A pressure safety valve (DEP-PSV-8123) is provided on the plant service air supply to DEP-PMP-00031 to protect the air diaphragm section of the pump due to the discrepancy between the PSA system air supply pressure and the maximum rated pressure of the pump.

Three evaporator feed vessel recirculation pumps (DEP-PMP-00012A/B/C) are provided. Two units are normally placed in operation while the third acts as a standby in the event that one of the operating pumps fails.

A redundant evaporator feed vessel transfer pump (DEP-PMP-00002A/B) is provided for DEP-VSL-00002 to allow for continuous system operation. A minimum flow recirculation loop with a restriction orifice (DEP-RO-00017) is used to keep the operating pump running at its minimum required flowrate when flow to DEP-EVAP-00001 is not required.

Dual pressure safety valves (DEP-PSV-8918/8919) are provided on the plant service air supply to DEP-FILT-00003 to protect the PSA system piping installed in BOF per the requirements of ASME B31.3.

Dual pressure safety valves (DEP-PSV-8924/8925) are provided on the Lab RLD system supply line to DEP-FILT-00003 because the design pressure of the pipe is lower than the maximum pressure of the systems that it ties into at the filter. These valves also protect the LAW RLD system supply line to the filter for the same reason.

Dual pressure safety valves (DEP-PSV-8195/8917) are provided on DEP-FILT-00003 to protect the unit from over-pressurization, as required by ASME Section VIII.

A restriction orifice (DEP-RO-00009) is provided on the line between DEP-MTEE-00002 and DEP-HX-00001 to increase the system resistance and cause branch flow for a sample to be transferred to DEP-HOOD-00001 to meet the requirement for sampling prior to transferring conditioned effluent to Tank Farms.

Dual pressure safety valves are provided on the process side (DEP-PSV-8399/8400) and the utility side (DEP-PSV-8413/8414) of DEP-HX-00001 to protect the heat exchanger from over-pressurization.

DEP-HX-00001 can be manually bypassed using DEP-V-00829 in the event of failure or maintenance to allow for continuous transfer to Tank Farms.

A redundant thermal type flow element (DEP-FE-8284) is provided on the continuous mesh spray line to DEP-EVAP-00001 in the event that the primary element (DEP-FE-8203) requires maintenance.

Redundant level elements (DEP-LE-8210/8211) and level transmitters (DEP-LT-8210/8211) are provided for DEP-EVAP-00001 to ensure DEP-LV-8211 maintains the required flow rate of feed to the evaporator.

A restriction orifice (DEP-RO-00018) is installed downstream of DEP-PMP-00017 to add resistance to the evaporator recirculation loop and ensure that the centrifugal pump functions properly.

A redundant evaporator concentrate discharge pump (DEP-PMP-00007A/B) is provided for DEP-EVAP-00001 so that the concentrate can be continuously monitored at DEP-SKID-00005 if one pump were to fail.

Thermal type flow element (DEP-FE-8230) can be manually bypassed using DEP-V-44469 if the instrument is plugged due to the solids contained in the concentrated effluent.

Redundant steam ejectors (DEP-EJCTR-00001B and DEP-EJCTR-00002B) are provided to ensure a continuous vacuum during evaporator operations.

Three rupture disks (DEP-PSE-8281/8282 and DVP-PSE-8214) are provided in the condenser/ejector system to protect DEP-EVAP-00001 and the process sides of DEP-RBLR-00001 and the condensers from over-pressurization.

Dual pressure safety valves (DEP-PSV-8252/8253) are installed on the cooling water supply line from the PCW system to the DEP system condensers to protect the utility side of the heat exchangers from over-pressurization.

A restriction orifice (DEP-RO-00015) is included on the minimum recirculation line from DEP-PMP-00006A/B to DEP-COND-00001 to add resistance to the loop and facilitate proper pump operation.

The swirl meters on the cooling water return lines to the PCW system from the DEP system condensers (DEP-FE-8254/8255/8256) can be manually bypassed using DEP-V-44494/44495/44498, respectively.

A redundant evaporator condensate pump (DEP-PMP-00006A/B) is provided for DEP-COND-00001 to ensure the required level is maintained in the boot of the condenser if the operating pump fails.

The thermal type flow elements downstream of DEP-PMP-00006A/B (DEP-FE-8261 and DEP-FE-8263) can each be manually bypassed using DEP-V-00451 and DEP-V-44672, respectively, if the instrument is plugged or requires maintenance.

Redundant condensate duplex cartridge filters (DEP-FILT-00004A/B) are provided to ensure continuous system operation during events such as filter change-out.

Each of these filters (DEP-FILT-00004A/B) is provided with a pressure safety valve (DEP-PSV-8265/8266) to protect the filter from over-pressurization.

A restriction orifice (DEP-RO-00016) is located on the demineralized water line providing make-up water for DEP-VSL-00008 to limit the flow rate to the vessel.

Dual pressure relief valves (DEP-PSV-8267/8268) are provided on the vent of DEP-VSL-00008 to ensure the vessel does not exceed its design pressure, as required by ASME Section VIII

Three overhead sampling vessel transfer/recirculation pumps (DEP-PMP-00004A/B/C) are provided. Two units are normally placed in operation while the third acts as a standby in the event that one of the operating pumps fails.

A redundant evaporator concentrate transfer/recirculation pump (DEP-PMP-00003A/B) is provided for DEP-VSL-00003A/B/C to ensure that the system can transfer vitrification feed to the LAW Facility without interruption.

The magnetic type flow transmitter (DEP-FT-8419) downstream of DEP-PMP-00003A/B can be manually bypassed using DEP-V-44818 if the instrument becomes plugged or requires maintenance.

The effluent concentrate line from the EMF to the LAW Facility can be manually flushed with sodium hydroxide using DEP-V-44269 in the event that the TOC is not available for timely transfers.

A redundant process condensate lag storage vessel transfer pump (DEP-PMP-00005A/B) is provided for DEP-VSL-00005A/B to ensure that the system can transfer condensate to LERF/ETF without interruption.

A restriction orifice (DEP-RO-00014) is installed on the off-specification condensate return line from DEP-PMP-00005A/B to DEP-VSL-00004A/B to limit the flow rate back to the receiving vessels.

Dual pressure relief valves (DEP-PSV-8495/8500) are provided on the inlet to DEP-FILT-00002 to protect the unit from over-pressurization, as required by ASME Section VIII.

A spare underground condensate transfer line is provided from the EMF to LERF/ETF which can be manually placed in service using DEP-V-00279.

Three process condensate lag storage vessel recirculation pumps (DEP-PMP-00015A/B/C) are provided. Two units are normally placed in operation while the third acts as a standby in the event that one of the operating pumps fails.

A pressure safety valve (DEP-PSV-8660) is provided on the inlet of DEP-FILT-00005 to protect the unit from over-pressurization, in accordance with ASME Section VIII.

A pressure safety valve (DEP-PSV-8686) is provided on the inlet of DEP-FILT-00006 to protect the unit from over-pressurization, in accordance with ASME Section VIII.

Dual pressure relief valves (DEP-PSV-8680/8681) are provided on the transfer line from the TOC and EMF to the LAW Facility for over-pressurization protection by ensuring the inline components do not exceed the maximum operating pressure required by ICD-30.

4.1.5.2 DVP System Reliability Features

Redundant exhauster trains provide continuous exhaust of the DEP system process vessels and the DEP evaporator after condenser. The trains are operated on a rotating basis, one operating and one on standby.

Pressure safety valves (DVP-PSV-8123/8124) are installed at the inlet to each preheater (DVP-HTR-00001A/B) to protect the preheaters and HEPA filters from over-pressurization that could occur upon failure of the evaporator system or improper operation of the flush system.

A backup air supply HEPA filter (DVP-HEPA-00001B) is included in the design for occasions when the primary filter (DVP-HEPA-00001A) is changed out. The unit is manually placed in service using DVP-V-00041.

4.1.5.3 ACV System Reliability Features

Two 100%-capacity air handling units (ACV-AHU-00001A/B) are included in the design for continuous air supply. One unit is placed in operation while the other serves as a standby.

A standby HEPA filter (ACV-HEPA-00001E) is provided to facilitate filter change out without interrupting the exhaust process.

Two 100%-capacity exhaust fans (ACV-FAN-00001A/B) are included in the design for continuous system functionality. One unit is placed in operation while the other serves as a standby.

4.1.6 System Control Features

The following sections describe the DEP, DVP, and ACV system indications, alarms, and system control features that are used for operation and performance monitoring. Refer to the detailed design documentation for additional detail.

4.1.6.1 System Monitoring

The following subsections describe important system monitoring that is used for operation and performance monitoring. Refer to the detailed design documentation for additional detail.

4.1.6.1.1 DEP System Monitoring

4.1.6.1.1.1 Evaporator Feed Subsystem Monitoring

4.1.6.1.1.1.1 Low Point Drain Vessel Temperature Indication

Temperature indication is provided in the control room via DEP-TI-8128 to inform the operator of the operating temperature of DEP-VSL-00001. There are no alarms associated with this indicator.

4.1.6.1.1.1.2 Low Point Drain Vessel Level Indication

Level indication is provided in the control room via DEP-LI-8109 to inform the operator of the volume of liquid that has been drained to DEP-VSL-00001. DEP-LI-8109 has high and low alarms to warn the operator that the vessel is close to overfilling or that the transfer out of the vessel should be stopped, respectively.

4.1.6.1.1.1.3 Low Point Drain Vessel Sump Level Indication and Leak Detection

Level indication is provided in the control room via DEP-LI-8112A to inform the operator of the volume of liquid that has collected in DEP-SUMP-00001. DEP-LI-8112A has high alarms to warn the operator that the sump is close to overfilling. A leak detection alarm is provided in the control room via DEP-LKY-8112A to inform the operator that there is a high rate of change into DEP-SUMP-00001, indicating a leak in DEP-VSL-00001 or in the coaxial piping within the drain tank chase.

4.1.6.1.1.1.4 Low Point Drain Vessel Pump Pressure Indication

Pressure indication is provided in the control room via DEP-PI-8110 to inform the operator that DEP-PMP-00001A/B is providing sufficient pressure to the system. DEP-PI-8110 has high and low alarms to warn the operator of a mechanical issue with the pumps or abnormally high and low discharge pressures.

4.1.6.1.1.1.5 Seal Water Pressure Indication

Pressure indication is provided in the control room via DEP-PI-8182 and DEP-PI-8136 to inform the operator of the seal water pressure supplied from the PSW system to DEP-PMP-00001A and DEP-PMP-00001B, respectively. These indicators have low alarms to warn the operator of a loss of the seal barrier.

4.1.6.1.1.1.6 Evaporator Feed Pre-Filter Pressure Indication

Unfiltered fluid chamber pressure, filtered fluid chamber pressure, and differential pressure indication are provided in the control room via DEP-PI-8192, DEP-PI-8194, and DEP-PDI-8192, respectively, to inform the operator whether DEP-FILT-00003 requires backwash. These indicators all have high and low alarms to warn the operator that the filter requires backwashing to DEP-VSL-00003A/B/C.

4.1.6.1.1.1.7 Evaporator Feed Pre-Filter Level Indication

Level indication is provided in the control room via DEP-LI-8191 to inform the operator of the liquid level in DEP-FILT-00003 above the filter element. DEP-LI-8191 has a high alarm to warn the operator that there is a potential blockage in the downstream transfer piping.

4.1.6.1.1.1.8 Evaporator Feed Vessel Level Indication

Level indication is provided in the control room via DEP-LI-8156 to inform the operator of the volume of liquid that has collected in DEP-VSL-00002. DEP-LI-8156 has high and low alarms to warn the operator that the vessel is close to overfilling or that the transfer out of the vessel should be stopped, respectively.

4.1.6.1.1.1.9 Evaporator Feed Vessel Temperature Indication

Temperature indication is provided in the control room via DEP-TI-8157 to inform the operator of the temperature of the evaporator feed that is discharged from DEP-VSL-00002. There are no alarms associated with this indicator.

4.1.6.1.1.1.10 Evaporator Feed Vessel pH Indication

pH indication is provided in the control room via DEP-AI-8907 to inform the operator whether the pH of the evaporator feed discharged from DEP-VSL-00002 is within the range established for advantageous corrosion conditions. DEP-AI-8907 has high and low alarms to warn the operator that the feed is off-specification and should be returned to Tank Farms.

4.1.6.1.1.1.11 Evaporator Feed Vessel Recirculation Pump Pressure Indication

Pressure indication is provided in the control room via DEP-PI-8168 to inform the operator that DEP-PMP-00012A/B/C are providing sufficient pressure to transfer off-specification feed to the effluent cooler or to recirculate the vessel contents through DEP-EDUC-00001A/B/C. DEP-PI-8168 has high and low alarms to warn the operator of a mechanical issue with the pumps or abnormally high and low discharge pressures.

4.1.6.1.1.1.12 Evaporator Feed Vessel Transfer to Tank Farms Flow Indication

Instantaneous and totalized flow indication is provided in the control room via DEP-FI-8908 and DEP-FQI-8908, respectively, to inform the operator of the transfer flow rate and volume of evaporator feed to Tank Farms. There are no alarms associated with these indicators.

4.1.6.1.1.1.13 Evaporator Feed Vessel Recirculation Flow Indication

Instantaneous and totalized flow indication is provided in the control room via DEP-FI-8172 and DEP-FQI-8172, respectively, to inform the operator of the recirculation flow rate and volume through DEP-EDUC-00001A/B/C. There are no alarms associated with these indicators.

4.1.6.1.1.1.14 Evaporator Feed Vessel Transfer Pump Pressure Indication

Pressure indication is provided in the control room via DEP-PI-8181 to inform the operator that DEP-PMP-00002A/B are providing sufficient pressure to transfer evaporator feed to DEP-EVAP-00001 or recirculate the contents of DEP-VSL-00002. DEP-PI-8181 has high and low alarms to warn the operator of a mechanical issue with the pumps or abnormally high and low discharge pressures.

4.1.6.1.1.1.15 Evaporator Feed Vessel Transfer Pump Flow Indication

Instantaneous and totalized flow indication is provided in the control room via DEP-FI-8182 and DEP-FQI-8182, respectively, to inform the operator of the flow rate and volume of feed transferred to DEP-EVAP-00001. DEP-FI-8182 has low alarms to warn the operator that the pumps are not meeting the required feed flow rate to the evaporator.

4.1.6.1.1.1.16 Process Condensate Transfer to Tank Farms Flow Indication

Instantaneous and totalized flow indication is provided in the control room via DEP-FI-8910 and DEP-FQI-8910, respectively, to inform the operator of the transfer flow rate and volume of process condensate added to the evaporator feed transferred to Tank Farms. There are no alarms associated with these indicators.

4.1.6.1.1.1.17 Effluent Cooler Pressure Indication

Pressure indication is provided in the control room via DEP-PI-8401 and DEP-PI-8415 to inform the operator of the pressure of the process fluid and cooling water return, respectively, discharged from DEP-HX-00001. Differential pressure indication is provided in the control room via DEP-PDI-8401 to inform the operator of the pressure difference between these two streams. DEP-PDI-8401 has a low alarm to warn the operator of a potential leak between the hot and cold sides of DEP-HX-00001.

4.1.6.1.1.1.18 Effluent Cooler PCW Return Conductivity Indication

Conductivity indication is provided in the control room via DEP-CI-8417 to inform the operator of the conductivity of the cooling water returned to the PCW system from DEP-HX-00001. DEP-CI-8417 has high alarms to warn the operator of a leak in the effluent cooler.

4.1.6.1.1.1.19 Effluent Cooler Temperature, pH, Flow, and Density Indication

Temperature, pH, instantaneous flow, totalized flow, and density indication are provided in the control room via DEP-TI-8402, DEP-AI-8403, DEP-FI-8404, DEP-FQI-8404, and DEP-DI-8404, respectively, to inform the operator of the characteristics of the process fluid discharged from the hot side of DEP-HX-00001. DEP-TI-8402 has a high alarm and DEP-AI-8403 has a low alarm to warn the operator that the effluent does not meet the waste acceptance requirements of ICD-31 for transfer to Tank Farms.

4.1.6.1.1.2 Evaporator Process Subsystem Monitoring

4.1.6.1.1.2.1 Evaporator Mesh Wash Flow Indication

Flow indication is provided in the control room via DEP-FI-8201 to inform the operator that the intermittent/maintenance mesh wash function of DEP-EVAP-00001 is in use. There are no alarms associated with this indicator.

4.1.6.1.1.2.2 Evaporator Mesh Spray Flow Indication

Flow indication is provided in the control room via DEP-FI-8203 and DEP-FI-8284 to inform the operator of the flow rate of process condensate to the continuous lower mesh spray nozzles (DEP-NOZ-00013A/B/C/D) in DEP-EVAP-00001. DEP-FI-8284 is only used during maintenance activities when DEP-FI-8203 and its associated transmitter are out of service. DEP-FI-8203 and DEP-FI-8284 have high and low alarms to warn the operator of an abnormal flow to the lower nozzles.

4.1.6.1.1.2.3 Evaporator Purge Air Flow Indication

Flow indication is provided in the control room via DEP-FI-8286 to inform the operator of the purge air supply flow from DEP-HEPA-00001A to DEP-EVAP-00001. There are no alarms associated with this indicator.

4.1.6.1.1.2.4 Evaporator Pressure Indication

Pressure indication is provided in the control room via DEP-PI-8209 to inform the operator of the pressure in DEP-EVAP-00001. DEP-PI-8209 has high and low alarms to warn the operator of a loss of vacuum or over-pressurization in the unit.

4.1.6.1.1.2.5 Evaporator Differential Pressure Indication

Differential pressure indication is provided in the control room via DEP-PDI-8207 and DEP-PDI-8208 to inform the operator of the pressure differential across the mesh pad and bubble cap tray, respectively, in DEP-EVAP-00001. DEP-PDI-8207 and DEP-PDI-8208 have high and low alarms to warn the operator that DEP-EVAP-00001 is not maintaining the required pressure drop across the mesh pad and bubble cap tray.

4.1.6.1.1.2.6 Evaporator Level Indication

Primary and secondary level indication are provided in the control room via DEP-LI-8211 and DEP-LI-8210, respectively, to inform the operator of the operating level in DEP-EVAP-00001. DEP-LI-8211 and DEP-LI-8210 have high and low alarms to warn the operator that the DEP system is not maintaining the required level in the evaporator.

4.1.6.1.1.2.7 Evaporator Recirculation Pump Pressure Indication

Pressure indication is provided in the control room via DEP-PI-8200 to inform the operator whether DEP-PMP-00017 is supplying sufficient pressure to feed DEP-RBLR-00001. There are no alarms associated with this indicator.

4.1.6.1.1.2.8 Seal Water Pressure Indication

Pressure indication is provided in the control room via DEP-PI-8236, DEP-PI-8237, and DEP-PI-8292 to inform the operator of the seal water pressure supplied from the PSW system to DEP-PMP-00007A, DEP-PMP-00007B, and DEP-PMP-00017, respectively. These indicators have low alarms to warn the operator of a loss of the seal barrier.

4.1.6.1.1.2.9 Evaporator and Reboiler Temperature Indication

Temperature indication is provided in the control room via DEP-TI-8212 and DEP-TI-8214 to inform the operator of the temperature of the process fluid discharged from DEP-EVAP-00001 and DEP-RBLR-00001, respectively. Differential temperature indication is provided in the control room via DEP-TDI-8212 to inform the operator of the temperature rise across the reboiler. DEP-TI-8212 and DEP-TI-8214 have high alarms to warn the operator that the temperature of the process fluid is above the operational limit.

4.1.6.1.1.2.10 Reboiler Condensate Temperature Indication

Temperature indication is provided in the control room via DEP-TI-8280 to inform the operator whether the temperature of the steam condensate collected from the cold side of DEP-RBLR-00001 is within the normal operating range. DEP-TI-8280 has a high alarm to warn the operator that the condensate is hotter than expected.

4.1.6.1.1.2.11 Reboiler Condensate Level Indication

Level indication is provided in the control room via DEP-LI-8216 to inform the operator of the amount of liquid condensate collected from the cold side of DEP-RBLR-00001. DEP-LI-8216 has high and low alarms to warn the operator that the level is outside the normal operating range.

4.1.6.1.1.2.12 Reboiler Condensate Conductivity Indication

Conductivity indication is provided in the control room via DEP-CI-8218 to inform the operator of the conductivity of the steam condensate collected from the cold side of DEP-RBLR-00001. DEP-CI-8218 has high alarms to warn the operator of a tube leak in the reboiler.

4.1.6.1.1.2.13 Reboiler Condensate Collection Vessel Level Indication

Level indication is provided in the control room via DEP-LI-8274 to inform the operator of the volume of liquid that has collected in DEP-VSL-00008. DEP-LI-8274 has high and low alarms to warn the operator that the vessel is close to overfilling or that the transfer out of the vessel should be stopped, respectively.

4.1.6.1.1.2.14 Evaporator Concentrate Discharge Pump Pressure Indication

Pressure indication is provided in the control room via DEP-PI-8231 to inform the operator whether DEP-PMP-00007A/B are providing sufficient pressure to transfer evaporator concentrate to the downstream vessel. DEP-PI-8231 has high and low alarms to warn the operator of a mechanical issue with the pumps or abnormally high and low discharge pressures.

4.1.6.1.1.2.15 Density, Radiation, and Flow Monitoring Skid Indication

Radiation, volumetric flow, mass flow, density, temperature, and time indication are provided in the control room via DEP-RI-8229, DEP-FI-8227, DEP-FI-8228, DEP-DI-8228, DEP-TI-8228, and DEP-UI-8233, respectively, to inform the operator whether the characteristics of the evaporator concentrate meet the density and radiation standards of the downstream equipment. DEP-RI-8229 has a high alarm, DEP-FI-8227 has low alarms, DEP-DI-8228 has high and low alarms to warn the operator that the concentrate does not meet the criteria for transfer to DEP-VSL-00003A/B/C and should either be routed for recirculation or transferred to DEP-VSL-00002. A separate fault-alarm (DEP-UA-8233) is included to warn the operator that the skid is incapable of monitoring radiation or if a failure occurs in any component or circuit that would affect the accuracy of the readout.

4.1.6.1.1.2.16 Normal Evaporator Concentrate Flow Indication

Instantaneous and totalized flow indication is provided in the control room via DEP-FI-8230 and DEP-FQI-8230, respectively, to inform the operator of the flow rate and volume of evaporator concentrate transferred to DEP-VSL-00003A/B/C. There are no alarms associated with these indicators.

4.1.6.1.1.2.17 Off-Specification Evaporator Concentrate Flow Indication

Totalized flow indication is provided in the control room via DEP-FQI-8227 to inform the operator of the volume of off-specification evaporator concentrate that has been transferred to DEP-VSL-00002. There are no alarms associated with this indicator.

4.1.6.1.1.2.18 Overhead Vapor Pressure and Temperature Indication

Pressure and temperature indication are provided in the control room via DEP-PI-8250 and DEP-TI-8249 to inform the operator whether the pressure and temperature of the overhead vapor transferred from DEP-EVAP-00001 to DEP-COND-00001 are within the normal operating range. These indicators have high and low alarms to warn the operator of a mechanical issue in DEP-EVAP-00001.

4.1.6.1.1.2.19 Primary Condenser Level Indication

Level indication is provided in the control room via DEP-LI-8251 to inform the operator of the amount of liquid that has condensed in the boot of DEP-COND-00001. DEP-LI-8251 has high and low alarms to warn the operator there may be a mechanical issue with DEP-PMP-00006A/B.

4.1.6.1.1.2.20 Primary Condenser Vent Pressure Indication

Pressure indication is provided in the control room via DEP-PI-8241 to inform the operator whether DEP-EJCTR-00001A/B is providing sufficient pressure control to maintain the pressure in the system. There are no alarms associated with this indicator.

4.1.6.1.1.2.21 Inter-Condenser Vent Pressure Indication

Pressure indication is provided in the control room via DEP-PI-8245 to inform the operator whether DEP-EJCTR-00002A/B is providing sufficient pressure control to maintain the pressure in the system. DEP-PI-8245 has high and low alarms to warn the operator of a loss of vacuum or over-pressurization in the system.

4.1.6.1.1.2.22 Steam Supply Pressure Indication

Pressure indication is provided in the control room via DEP-PI-8235 to inform the operator whether the HPS system is providing sufficient steam to DEP-EJCTR-00001A/B and DEP-EJCTR-00002A/B. DEP-PI-8235 has high and low alarms to warn the operator of a mechanical issue in the BOF HPS system.

4.1.6.1.1.2.23 Ejector Pressure Indication

Pressure indication is provided in the control room via DEP-PI-8239 and DEP-PI-8243 to inform the operator whether DEP-EJCTR-00001A/B and DEP-EJCTR-00002A/B, respectively, are providing sufficient pressure to pull vapor into their respective condensers. There are no alarms associated with these indicators.

4.1.6.1.1.2.24 Ejector Temperature Indication

Temperature indication is provided in the control room via DEP-TI-8240 and DEP-TI-8244 to inform the operator whether DEP-EJCTR-00001A/B and DEP-EJCTR-00002A/B, respectively, are providing vapor to their respective condensers at a sufficient temperature. There are no alarms associated with these indicators.

4.1.6.1.1.2.25 Cooling Water Return Temperature and Flow Indication

Temperature and flow indication are provided in the control room via DEP-TI-8255/DEP-FI-8255 (DEP-COND-00001), DEP-TI-8254/DEP-FI-8254 (DEP-COND-00002), and DEP-TI-8256/DEP-FI-8256 (DEP-COND-00003) to inform the operator whether the cooling water returned from the DEP condensers to the PCW system is being transferred at a sufficient rate and temperature. The temperature indicators have high and low alarms to warn the operator that the DEP system is returning water at abnormally high or low temperatures.

4.1.6.1.1.2.26 Evaporator Condensate Pump Pressure Indication

Pressure indication is provided in the control room via DEP-PI-8260 to inform the operator whether DEP-PMP-00006A/B are providing sufficient pressure to transfer evaporator condensate to the appropriate location. DEP-PI-8260 has high and low alarms to warn the operator of a mechanical issue with the pumps or abnormally high and low discharge pressures.

4.1.6.1.1.2.27 Evaporator Condensate Pump Conductivity Indication

Conductivity indication is provided in the control room via DEP-CI-8257 to inform the operator of the conductivity of the condensate discharged from DEP-PMP-00006A/B. DEP-CI-8257 has high alarms to warn the operator that the condensate is off-specification and should be returned to DEP-EVAP-00001.

4.1.6.1.1.2.28 Evaporator Condensate Pump Flow Indication

Flow indication is provided in the control room via DEP-FI-8261 and DEP-FI-8263 to inform the operator of the rate of condensate transfer from DEP-PMP-00006A/B to DEP-VSL-00004A/B or recirculated back to DEP-EVAP-00001 for reprocessing, respectively. There are no alarms associated with these indicators.

4.1.6.1.1.2.29 Condensate Filter Differential Pressure Indication

Differential pressure indication is provided in the control room via DEP-PDI-8264 to inform the operator of the pressure drop across DEP-FILT-00004A/B. DEP-PDI-8264 has a high alarm to warn the operator that the filter has loaded and requires change-out.

4.1.6.1.1.3 Evaporator Discharge Subsystem Monitoring

4.1.6.1.1.3.1 Evaporator Concentrate Vessels Level Indication

Level indication is provided in the control room via DEP-LI-8357, DEP-LI-8368, and DEP-LI-8379 to inform the operator of the volume of liquid that has collected in DEP-VSL-00003A, DEP-VSL-00003B, and DEP-VSL-00003C, respectively. These indicators have high and low alarms to warn the operator that the vessel is close to overfilling or that the transfer out of the vessel should be stopped, respectively.

4.1.6.1.1.3.2 Evaporator Concentrate Vessels Temperature Indication

Temperature indication is provided in the control room via DEP-TI-8358, DEP-TI-8369, and DEP-TI-8380 to inform the operator whether the temperature of the concentrate that is discharged from DEP-VSL-00003A, DEP-VSL-00003B, and DEP-VSL-00003C, respectively, is within the operational limit. These indicators have high alarms to warn the operator that the process fluid is too hot to transfer to the LAW Facility.

4.1.6.1.1.3.3 Seal Water Pressure Indication

Pressure indication is provided in the control room via DEP-PI-8387 and DEP-PI-8392 to inform the operator of the seal water pressure supplied from the PSW system to DEP-PMP-00003A and DEP-PMP-00003B, respectively. These indicators have low alarms to warn the operator of a loss of the seal barrier.

4.1.6.1.1.3.4 Evaporator Concentrate Transfer/Recirculation Pump Pressure and Flow Indication

Pressure and flow indication are provided in the control room via DEP-PI-8394 and DEP-FI-8419 to inform the operator whether DEP-PMP-00003A/B are providing sufficient pressure and flow to transfer evaporator concentrate to the appropriate location. DEP-PI-8394 has high and low alarms and DEP-FI-8419 has low alarms to warn the operator of a mechanical issue with the pumps.

4.1.6.1.1.3.5 Evaporator Concentrate Transfer to LAW Flow and Density Indication

Instantaneous flow, totalized flow, and density indication are provided in the control room via DEP-FI-8395, DEP-FQI-8395, and DEP-DI-8395 respectively, to inform the operator whether the flow rate, volume, and density of evaporator concentrate transferred to the LAW Facility is within the acceptance criteria limits of ICD-30 and the design capacity of the LCP system. DEP-FI-8395 has a high alarm to warn the operator that the transfer rate is above the maximum acceptance rate of the LCP system.

4.1.6.1.1.3.6 TOC Feed Indication

Radiation, instantaneous flow, totalized feed flow, totalized flush water flow, density and pressure indication are provided in the control room via DEP-RI-8676, DEP-FI-8677, DEP-FQI-8677A, DEP-FQI-8677B, DEP-DI-8677, and DEP-PI-8678, respectively, to inform the operator whether the feed received from the TOC is within the specifications established in ICD-30. DEP-RI-8676 has a high alarm, DEP-FI-8677 has high and low alarms, DEP-DI-8677 has a high alarm, and DEP-PI-8678 has a high alarm to warn the operator that the feed does not meet the acceptance criteria for transfer to the LAW Facility and should be returned to Tank Farms.

4.1.6.1.1.3.7 LAW Facility Feed Temperature Indication

Temperature indication is provided in the control room via DEP-TI-8685 to inform the operator whether the combined feed from EMF and the TOC is within the specifications established in ICD-30 and can be transferred to the LAW Facility. DEP-TI-8685 has high alarms to warn the operator that the feed temperature is too high to transfer to the LAW Facility.

4.1.6.1.1.3.8 Off-Specification Evaporator Concentrate Transfer Flow Indication

Instantaneous and totalized flow indication is provided in the control room via DEP-FI-8909 and DEP-FQI-8909, respectively, to inform the operator of the transfer flow rate and volume of evaporator concentrate to Tank Farms or DEP-VSL-00002 through DEP-FILT-00003. DEP-FI-8909 has a high alarm to warn the operator that the transfer rate is above the maximum expected value.

4.1.6.1.1.3.9 Evaporator Concentrate Vessel Eductor and Recirculation Flow Indication

Flow indication is provided in the control room via DEP-FI-8423 and DEP-FI-8427 to inform the operator of the recirculation and eductor mixing flow rates, respectively, for DEP-VSL-00003A/B/C. The flow rate to the eductors is totalized and displayed by DEP-FQI-8427. There are no alarms associated with these indicators.

4.1.6.1.1.3.10 Overhead Sampling Vessel Level Indication

Level indication is provided in the control room via DEP-LI-8305 and DEP-LI-8312 to inform the operator of the volume of liquid that has collected in DEP-VSL-00004A and DEP-VSL-00004B, respectively. These indicators have high and low alarms to warn the operator that the vessel is close to overfilling or that the transfer out of the vessel should be stopped, respectively.

4.1.6.1.1.3.11 Overhead Sampling Vessel Temperature Indication

Temperature indication is provided in the control room via DEP-TI-8306 and DEP-TI-8313 to inform the operator whether the temperature of the condensate that is discharged from DEP-VSL-00004A and DEP-VSL-00004B, respectively, is within the operational limit. There are no alarms associated with these indicators.

4.1.6.1.1.3.12 Overhead Sampling Vessel Transfer/Recirculation Pump Pressure Indication

Pressure indication is provided in the control room via DEP-PI-8322 to inform the operator whether DEP-PMP-00004A/B/C are providing sufficient pressure to transfer evaporator condensate to the appropriate location. DEP-PI-8322 has high and low alarms to warn the operator of a mechanical issue with the pumps or abnormally high and low discharge pressures.

4.1.6.1.1.3.13 Overhead Sampling Vessel Transfer/Recirculation Pump Flow Indication

Instantaneous and totalized flow indication are provided in the control room via DEP-FI-8321 and DEP-FQI-8321, respectively, to inform the operator whether DEP-PMP-00004A/B/C are transferring evaporator condensate at a sufficient flow rate. DEP-FI-8321 has low alarms to warn the operator that the flow through the eductors or to DEP-VSL-00005A/B is insufficient.

4.1.6.1.1.3.14 Lag Storage Vessel Density Indication

Density indication is provided in the control room via DEP-DI-8455 and DEP-DI-8481 to inform the operator of the concentration of the condensate stored in DEP-VSL-00005A and DEP-VSL-00005B, respectively. There are no alarms associated with these indicators.

4.1.6.1.1.3.15 Lag Storage Vessel Level Indication

Level indication is provided in the control room via DEP-LI-8458 and DEP-LI-8468 to inform the operator of the volume of liquid that has collected in DEP-VSL-00005A and DEP-VSL-00005B, respectively. These indicators have high and low alarms to warn the operator that the vessel is close to overfilling or that the transfer out of the vessel should be stopped, respectively.

4.1.6.1.1.3.16 Lag Storage Vessel Temperature Indication

Temperature indication is provided in the control room via DEP-TI-8459 and DEP-TI-8469 to inform the operator whether the temperature of the condensate that is discharged from DEP-VSL-00005A and DEP-VSL-00005B, respectively, is within the operational limit. There are no alarms associated with these indicators.

4.1.6.1.1.3.17 Lag Storage Vessel Recirculation Pump Pressure and Flow Indication

Pressure, instantaneous flow, and totalized flow indication are provided in the control room via DEP-PI-8492, DEP-FI-8493, and DEP-FQI-8493, respectively, to inform the operator whether DEP-PMP-00015A/B/C are providing sufficient pressure and flow to recirculate the vessel and the total volume of effluent that has been transferred. DEP-PI-8492 has high and low alarms and DEP-FI-8493 has low alarms to warn the operator of a mechanical issue with the pumps or a blockage in the flow path.

4.1.6.1.1.3.18 Lag Storage Vessel Recirculation Pump Flush Flow Indication

Instantaneous and totalized flow indication are provided in the control room via DEP-FI-8496 and DEP-FQI-8496, respectively, to inform the operator whether DEP-PMP-00015A/B/C are providing sufficient flow to flush DEP system piping and the total volume of effluent that has been transferred. There are no alarms associated with these indicators.

4.1.6.1.1.3.19 Lag Storage Vessel Transfer Pump Pressure and Flow Indication

Pressure, instantaneous flow, and totalized flow indication are provided in the control room via DEP-PI-8474, DEP-FI-8475, and DEP-FQI-8475, respectively, to inform the operator whether DEP-PMP-00005A/B are providing sufficient pressure and flow to transfer evaporator concentrate to the appropriate location and the total volume of effluent that has been transferred. DEP-PI-8474 has high and low alarms and DEP-FI-8475 has low alarms to warn the operator of a mechanical issue with the pumps or a blockage in the flow path.

4.1.6.1.1.3.20 Lag Storage Vessel Transfer Line Indication

Radiation, conductivity, pH, and temperature indication are provided in the control room via DEP-RI-8476, DEP-CI-8477, DEP-AI-8478, and DEP-TI-8479 to inform the operator whether the condensate transferred from DEP-VSL-00005A/B meets the acceptance criteria for transfer to LERF/ETF. DEP-RI-8476 has a high alarm, DEP-CI-8477 has high alarms, DEP-AI-8478 has high and low alarms, and DEP-TI-8479 has high alarms to warn the operator that the effluent does not meet the criteria established in ICD-06 and should be diverted back to DEP-VSL-00004A/B.

4.1.6.1.1.3.21 Lag Storage Vessel to LERF/ETF Transfer Line Flow and Pressure Indication

Instantaneous flow, totalized flow, and pressure indication are provided in the control room via DEP-FI-8482, DEP-FQI-8482, and DEP-PI-8484, respectively, to inform the operator of the flow rate and volume of condensate transferred to DEP-FILT-00002 and pressure of the condensate discharged from DEP-FILT-00002 to LERF/ETF. DEP-PI-8484 has high alarms to warn the operator that the pressure safety valves are not sufficiently protecting DEP-FILT-00002 from over-pressurization.

4.1.6.1.1.3.22 Process Condensate Filter Differential Pressure Indication

Differential pressure indication is provided in the control room via DEP-PDI-8483 to inform the operator of the pressure drop across DEP-FILT-00002. DEP-PDI-8483 has a high alarm to warn the operator that the filter has loaded and requires change-out.

4.1.6.1.1.3.23 LERF/ETF Vent Line Pressure Indication

Pressure indication is provided in the control room via DEP-PI-8499 to inform the operator whether the vent line installed on the transfer line to LERF/ETF is preventing the accumulation of negative pressure in the system. DEP-PI-8499 has low alarms to warn the operator that a vacuum is present in the system.

4.1.6.1.1.4 Other DEP System Monitoring

4.1.6.1.1.4.1 East Evaporator Process Area Sump Level Indication and Leak Detection

Level indication is provided in the control room via DEP-LI-8646A and DEP-LI-8647A to inform the operator of the volume of liquid that has collected in DEP-SUMP-00003A and DEP-SUMP-00003B, respectively. These indicators have high alarms to warn the operator that the sump is close to overfilling. Leak detection alarms are provided in the control room via DEP-LKY-8646A and DEP-LKY-8647A to inform the operator that there is a high rate of change into DEP-SUMP-00003A/B, indicating a leak in the east evaporator process area (E-0102).

4.1.6.1.1.4.2 West Evaporator Process Area Sump Level Indication and Leak Detection

Level indication is provided in the control room via DEP-LI-8626A and DEP-LI-8629A to inform the operator of the volume of liquid that has collected in DEP-SUMP-00002A and DEP-SUMP-00002B, respectively. These indicators have high alarms to warn the operator that the sump is close to overfilling. Leak detection alarms are provided in the control room via DEP-LKY-8626A and DEP-LKY-8629A to inform the operator that there is a high rate of change into DEP-SUMP-00002A/B, indicating a leak in the west evaporator process area (E-0103).

4.1.6.1.1.4.3 Feed Tank Area Sump Level Indication and Leak Detection

Level indication is provided in the control room via DEP-LI-8632A and DEP-LI-8656A to inform the operator of the volume of liquid that has collected in DEP-SUMP-00004A and DEP-SUMP-00004B, respectively. These indicators have high alarms to warn the operator that the sump is close to overfilling. Leak detection alarms are provided in the control room via DEP-LKY-8632A and DEP-LKY-8656A to inform the operator that there is a high rate of change into DEP-SUMP-00004A/B, indicating a leak in the feed tank area (E-0105).

4.1.6.1.1.4.4 Process Condensate Area Sump Level Indication and Leak Detection

Level indication is provided in the control room via DEP-LI-8638A and DEP-LI-8641A to inform the operator of the volume of liquid that has collected in DEP-SUMP-00005A and DEP-SUMP-00005B, respectively. These indicators have high alarms to warn the operator that the sump is close to overfilling. Leak detection alarms are provided in the control room via DEP-LKY-8638A and DEP-LKY-8641A to inform the operator that there is a high rate of change into DEP-SUMP-00005A/B, indicating a leak in the process condensate tank area (E-0106).

4.1.6.1.1.4.5 Truck Unloading Area Sump Level and Leak Detection

Level indication is provided in the control room via DEP-LI-8648A to inform the operator of the volume of liquid that has collected in DEP-SUMP-00008. DEP-LI-8648A has high alarms to warn the operator that the sump is close to overfilling. A leak detection alarm is provided in the control room via DEP-LKY-8648A to inform the operator that there is a high rate of change into DEP-SUMP-00008, indicating a leak in the truck unloading area (E-0108).

4.1.6.1.1.4.6 Tank Farms Transfer Line Leak Detection

A leak detection alarm is provided in the control room via DEP-LAH-8701 to warn the operator of a leak in the transfer line between DEP-HX-00001 and Tank Farms.

4.1.6.1.1.4.7 TOC Transfer Line Leak Detection

A leak detection alarm is provided in the control room via DEP-LAH-8702 to warn the operator of a leak in the transfer line between the TOC and the EMF.

4.1.6.1.1.4.8 LAW Facility Transfer Line Leak Detection

A leak detection alarm is provided in the control room via DEP-LAH-8703 to warn the operator of a leak in the transfer line between the EMF and the LAW Facility.

4.1.6.1.1.4.9 LAW RLD System Transfer Line Leak Detection

A leak detection alarm is provided in the control room via DEP-LAH-8704 to warn the operator of a leak in the transfer line between the LAW RLD system and the EMF.

4.1.6.1.1.4.10 LAW LVP System Transfer Line Leak Detection

A leak detection alarm is provided in the control room via DEP-LAH-8705 to warn the operator of a leak in the transfer line between the LAW LVP system and the EMF.

4.1.6.1.1.4.11 Lab RLD System Transfer Line Leak Detection

A leak detection alarm is provided in the control room via DEP-LAH-8706 to warn the operator of a leak in the transfer line between the Lab RLD system and the EMF.

4.1.6.1.2 DVP System Monitoring

4.1.6.1.2.1 Evaporator Concentrate Vessel Flow Indication

Flow indication is provided in the control room via DVP-FI-8211, DVP-FI-8212, and DVP-FI-8213 to inform the operator of the purge air supply flow rate to DEP-VSL-00003A, DEP-VSL-00003B, and DEP-VSL-00003C, respectively. There are no alarms associated with these indicators.

4.1.6.1.2.2 Vessel Vent Header Differential Pressure Indication

Differential pressure indication is provided in the control room via DVP-PDI-8105 to inform the operator of the difference between the room pressure in the east evaporator process area (E-0102) and the pressure in the common vessel vent header. DVP-PDI-8105 has high and low alarms to warn the operator that the exhausters (DVP-EXHR-00001A/B) are either running too fast or not meeting the demand of the system.

4.1.6.1.2.3 Vessel Vent Header Temperature Indication

Temperature indication is provided in the control room via DVP-TI-8118 to inform the operator of the temperature of the vent supply to DVP-HTR-00001A/B to help determine whether the units are operating correctly. There are no alarms associated with this indication.

4.1.6.1.2.4 Preheater Outlet Temperature Indication

Temperature indication is provided in the control room via DVP-TI-8107 and DVP-TI-8113 to inform the operator of the temperature of the air discharged from DVP-HTR-00001A and DVP-HTR-00001B, respectively, to help determine whether the units are operating correctly. These indicators have high alarms to warn the operator that the units are providing too much heat to the system.

4.1.6.1.2.5 Preheater Differential Temperature Indication

Differential temperature indication is provided in the control room via DVP-TDI-8107 and DVP-TDI-8113 to inform the operator of the difference between the temperature of the air supplied to DVP-HTR-00001A and DVP-HTR-00001B, respectively, and the temperature of the air discharged from the units. These indicators have low alarms to warn the operator of a mechanical issue with the preheaters while the exhausters are in operation.

4.1.6.1.2.6 Primary HEPA Filter Differential Pressure Indication

Differential pressure indication is provided in the control room via DVP-PDI-8108 and DVP-PDI-8114 to inform the operator of the pressure drop across DVP-HEPA-00003A and DVP-HEPA-00003B, respectively. These indicators have high alarms to warn the operator that the filters have loaded to a point where they could potentially affect the design flow rate of the system and should be changed out.

4.1.6.1.2.7 Secondary HEPA Filter Differential Pressure Indication

Differential pressure indication is provided in the control room via DVP-PDI-8109 and DVP-PDI-8115 to inform the operator of the pressure drop across DVP-HEPA-00004A and DVP-HEPA-00004B, respectively. These indicators have high alarms to warn the operator that the filters have loaded to a point where they could potentially affect the design flow rate of the system and should be changed out.

4.1.6.1.2.8 Exhauster Speed Indication

Speed indication is provided in the control room via DVP-SI-8110 and DVP-SI-8116 to inform the operator of the fan motor shaft speed of DVP-EXHR-00001A and DVP-EXHR-00001B, respectively. These indicators have low alarms to warn the operator of a mechanical issue with the exhausters while the units are running.

4.1.6.1.2.9 Exhauster Flow Indication

Flow indication is provided in the control room via DVP-FI-8111 and DVP-FI-8117 to inform the operator of the discharge flow rate from DVP-EXHR-00001A and DVP-EXHR-00001B, respectively. These indicators have low alarms to warn the operator of a mechanical issue with the exhausters while the units are running.

4.1.6.1.3 ACV System Monitoring

4.1.6.1.3.1 Outside Air Temperature and Humidity Indication

Temperature and humidity indication is provided in the control room via ACV-TI-8101 and ACV-MI-8102, respectively, to assist the operator in the air handling unit evaporator cooler control. There are no alarms associated with these indicators.

4.1.6.1.3.2 AHU Preheater Discharge Temperature Indication

Temperature indication is provided in the control room via ACV-TI-8104 and ACV-TI-8121 to inform the operator of the air temperature downstream of the preheat steam coils in ACV-AHU-00001A and ACV-AHU-00001B, respectively. These indicators have high and low alarms to warn the operator of a mechanical issue with the steam coils.

4.1.6.1.3.3 AHU Low Efficiency Filter Differential Pressure Indication

Differential pressure indication is provided in the control room via ACV-PDI-8105 and ACV-PDI-8122 to inform the operator whether the low efficiency filters in ACV-AHU-00001A and ACV-AHU-00001B, respectively, need to be changed out. There are no alarms associated with these indicators.

4.1.6.1.3.4 AHU High Efficiency Filter Differential Pressure Indication

Differential pressure indication is provided in the control room via ACV-PDI-8106 and ACV-PDI-8123 to inform the operator whether the high efficiency filters in ACV-AHU-00001A and ACV-AHU-00001B, respectively, need to be changed out. There are no alarms associated with these indicators.

4.1.6.1.3.5 AHU Supply Fan Differential Pressure Indication

Differential pressure indication is provided in the control room via ACV-PDI-8116 and ACV-PDI-8133 to inform the operator of the pressure drop across the supply fans in ACV-AHU-00001A and ACV-AHU-00001B, respectively. These indicators have low alarms to warn the operator of a mechanical issue with the fans.

4.1.6.1.3.6 AHU Supply Fan Flow Indication

Flow indication is provided in the control room via ACV-FI-8112 and ACV-FI-8129 to inform the operator of the flow through the supply fans of ACV-AHU-00001A and ACV-AHU-00001B, respectively. These indicators have low alarms to warn the operator that the fans are not providing sufficient flow to the downstream system.

4.1.6.1.3.7 AHU Supply Fan Speed Indication

Speed indication is provided in the control room via ACV-SI-8115 and ACV-SI-8132 to inform the operator of the speed of the supply fans of ACV-AHU-00001A and ACV-AHU-00001B, respectively. These indicators have low alarms to warn the operator of a mechanical issue with the fans.

4.1.6.1.3.8 AHU Supply Fan Inboard Bearing Temperature Indication

Temperature indication is provided in the control room via ACV-TI-8113 and ACV-TI-8130 to inform the operator of the inboard bearing temperature of the supply fans of ACV-AHU-00001A and ACV-AHU-00001B, respectively. These indicators have high alarms to warn the operator that the inboard bearing lubrication is overheating.

4.1.6.1.3.9 AHU Supply Fan Outboard Bearing Temperature Indication

Temperature indication is provided in the control room via ACV-TI-8114 and ACV-TI-8131 to inform the operator of the outboard bearing temperature of the supply fans of ACV-AHU-00001A and ACV-AHU-00001B, respectively. These indicators have high alarms to warn the operator that the outboard bearing lubrication is overheating.

4.1.6.1.3.10 AHU Evaporative Cooling Unit Differential Pressure Indication

Differential pressure indication is provided in the control room via ACV-PDI-8107 and ACV-PDI-8124 to inform the operator of the pressure drop across the evaporative cooling units of ACV-AHU-00001A and ACV-AHU-00001B, respectively. These indicators have high and low alarms to warn the operator of a blockage in the system.

4.1.6.1.3.11 AHU Indirect Evaporative Cooling Differential Temperature Indication

Differential temperature indication is provided in the control room via ACV-TDI-8192 and ACV-TDI-8200 to inform the operator of the temperature drop across the indirect evaporative cooling portion of ACV-AHU-00001A and ACV-AHU-00001B, respectively. There are no alarms associated with these indicators.

4.1.6.1.3.12 AHU Discharge Temperature Indication

Temperature indication is provided in the control room via ACV-TI-8117 and ACV-TI-8134 to inform the operator of the temperature of the air discharged from ACV-AHU-00001A and ACV-AHU-00001B, respectively. There are no alarms associated with these indicators.

4.1.6.1.3.13 AHU Discharge Humidity Indication

Moisture indication is provided in the control room via ACV-MI-8119 and ACV-MI-8136 to inform the operator of the humidity of the air discharged from ACV-AHU-00001A and ACV-AHU-00001B, respectively. These indicators have high and low alarms to warn the operator of a malfunction in the evaporative cooling section of the AHUs.

4.1.6.1.3.14 AHU Discharge Flow Indication

Flow indication is provided in the control room via ACV-FI-8137A to inform the operator of the total flow discharged from the ACV system AHUs to the LAW effluent utility, drain tank, and process buildings. This indicator has high alarms to warn the operator that the total flow has exceeded a predetermined setpoint.

4.1.6.1.3.15 Air Supply to Utility Building Temperature, Pressure, and Flow Indication

Temperature, pressure, and flow indication are provided in the control room via ACV-TI-8138, ACV-PI-8138, and ACV-FI-8138, respectively, to inform the operator of the properties of the air supplied to the LAW effluent utility building. ACV-FI-8138 has a low alarm to warn the operator that the ACV system is not supplying sufficient air flow to the building.

4.1.6.1.3.16 Air Supply to Process Building Temperature, Pressure, and Flow Indication

Temperature, pressure, and flow indication are provided in the control room via ACV-TI-8137, ACV-PI-8137, and ACV-FI-8137, respectively, to inform the operator of the properties of the air supplied to the LAW effluent process building. ACV-FI-8137 has a low alarm to warn the operator that the ACV system is not supplying sufficient air flow to the building.

4.1.6.1.3.17 EU-0101 Temperature and Differential Pressure Indication

Temperature and differential pressure indication are provided in the control room via ACV-TI-8140 and ACV-PDI-8139, respectively, to inform the operator of the temperature and pressure (relative to atmospheric) maintained in the utility room (EU-0101) of the LAW effluent utility building. ACV-TI-8140 has high and low alarms to warn the operator that the AHUs are not performing correctly and ACV-PDI-8139 has a high alarm to warn the operator of a potential loss of cascade airflow.

4.1.6.1.3.18 EU-0102 Temperature and Differential Pressure Indication

Temperature and differential pressure indication are provided in the control room via ACV-TI-8142 and ACV-PDI-8141, respectively, to inform the operator of the temperature and pressure (relative to atmospheric) maintained in the filter room (EU-0102) of the LAW effluent utility building. ACV-TI-8142 has high and low alarms to warn the operator that the AHUs are not performing correctly and ACV-PDI-8141 has a high alarm to warn the operator of an excess exhaust fan speed.

4.1.6.1.3.19 E-0101 Temperature and Differential Pressure Indication

Temperature and differential pressure indication are provided in the control room via ACV-TI-8146 and ACV-PDI-8145, respectively, to inform the operator of the temperature and pressure (relative to atmospheric) maintained in the subchange (E-0101) of the LAW effluent process building. ACV-TI-8146 has high and low alarms to warn the operator that the AHUs are not performing correctly and ACV-PDI-8145 has a high alarm to warn the operator of a potential loss of cascade airflow.

4.1.6.1.3.20 E-0102 Temperature and Differential Pressure Indication

Temperature and differential pressure indication are provided in the control room via ACV-TI-8158 and ACV-PDI-8157, respectively, to inform the operator of the temperature and pressure (relative to atmospheric) maintained in the east evaporator process area (E-0102) of the LAW effluent process building. ACV-TI-8158 has high and low alarms to warn the operator that the AHUs and unit heaters are not performing correctly and ACV-PDI-8157 has a high alarm to warn the operator of a potential loss of cascade airflow.

4.1.6.1.3.21 E-0102A Temperature and Differential Pressure Indication

Temperature and differential pressure indication are provided in the control room via ACV-TI-8144 and ACV-PDI-8143, respectively, to inform the operator of the temperature and pressure (relative to atmospheric) maintained in the HEPA filter room (E-0102A) of the LAW effluent process building. ACV-TI-8144 has high and low alarms to warn the operator that the AHUs are not performing correctly and ACV-PDI-8143 has a high alarm to warn the operator of a potential loss of cascade airflow.

4.1.6.1.3.22 E-0103 Temperature and Differential Pressure Indication

Temperature and differential pressure indication are provided in the control room via ACV-TI-8156 and ACV-PDI-8155, respectively, to inform the operator of the temperature and pressure (relative to atmospheric) maintained in the west evaporator process area (E-0103) of the LAW effluent process building. ACV-TI-8156 has high and low alarms to warn the operator that the AHUs and unit heaters are not performing correctly and ACV-PDI-8155 has a high alarm to warn the operator of an excess exhaust fan speed.

4.1.6.1.3.23 E-0104 Temperature and Differential Pressure Indication

Temperature and differential pressure indication are provided in the control room via ACV-TI-8148 and ACV-PDI-8147, respectively, to inform the operator of the temperature and pressure (relative to atmospheric) maintained in the airlock (E-0104) of the LAW effluent process building. ACV-TI-8148 has high and low alarms to warn the operator that the AHUs are not performing correctly and ACV-PDI-8147 has a high alarm to warn the operator of a potential loss of cascade airflow.

4.1.6.1.3.24 ED-0101 Temperature and Differential Pressure Indication

Temperature and differential pressure indication are provided in the control room via ACV-TI-8150 and ACV-PDI-8149, respectively, to inform the operator of the temperature and pressure (relative to atmospheric) maintained in the subchange (ED-0101) of the LAW effluent drain tank building. ACV-TI-8150 has high and low alarms to warn the operator that the AHUs are not performing correctly and ACV-PDI-8149 has a high alarm to warn the operator of a potential loss of cascade airflow.

4.1.6.1.3.25 ED-0102 Temperature and Differential Pressure Indication

Temperature and differential pressure indication are provided in the control room via ACV-TI-8152 and ACV-PDI-8151, respectively, to inform the operator of the temperature and pressure (relative to atmospheric) maintained in the drain tank maintenance area (ED-0102) of the LAW effluent drain tank building. ACV-TI-8152 has high and low alarms to warn the operator that the AHUs and unit heaters are not performing correctly and ACV-PDI-8151 has a high alarm to warn the operator of a potential loss of cascade airflow.

4.1.6.1.3.26 ED-B001 Temperature and Differential Pressure Indication

Temperature and differential pressure indication are provided in the control room via ACV-TI-8154 and ACV-PDI-8153, respectively, to inform the operator of the temperature and pressure (relative to atmospheric) maintained in the drain tank cell (ED-B001) of the LAW effluent drain tank building. ACV-TI-8154 has high and low alarms to warn the operator that the AHUs and unit heaters are not performing correctly and ACV-PDI-8153 has a high alarm to warn the operator of a potential loss of cascade airflow.

4.1.6.1.3.27 Fume Hood Temperature, Pressure, and Flow Indication

Temperature, pressure, and flow indication are provided in the control room via ACV-TI-8159, ACV-PI-8159, and ACV-FI-8159, respectively, to inform the operator of the properties of the air exhausted from DEP-HOOD-00001. ACV-FI-8159 has a high alarm to warn the operator that the air flow from the fume hood to the exhaust header has exceeded the operational limit established during system balancing.

4.1.6.1.3.28 Exhaust Header Temperature and Differential Pressure Indication

Temperature and differential pressure indication are provided in the control room via ACV-TI-8163 and ACV-PDI-8161, respectively, to inform the operator of the temperature and pressure (relative to atmospheric) of the combined exhaust from the LAW effluent process and utility buildings. ACV-TI-8163 has a high alarm to warn the operator that the exhaust has the potential to damage the HEPA filters and ACV-PDI-8161 has a high alarm to warn the operator of an excess exhaust fan speed.

4.1.6.1.3.29 HEPA Filter Differential Pressure Indication

Differential pressure indication is provided in the control room via ACV-PDI-8160 to inform the operator of the pressure drop across the ACV system HEPA filter bank. ACV-PDI-8160 has a high alarm to warn the operator that the HEPA filters need to be changed out.

4.1.6.1.3.30 Exhaust Fan Differential Pressure Indication

Differential pressure indication is provided in the control room via ACV-PDI-8183 and ACV-PDI-8189 to inform the operator of the pressure drop across ACV-FAN-00001A and ACV-FAN-00001B, respectively. These indicators have low alarms to warn the operator of a mechanical issue with the fans.

4.1.6.1.3.31 Exhaust Fan Speed Indication

Speed indication is provided in the control room via ACV-SI-8181 and ACV-SI-8187 to inform the operator of the speed of ACV-FAN-00001A and ACV-FAN-00001B, respectively. These indicators have low alarms to warn the operator of a mechanical issue with the fans.

4.1.6.1.3.32 Exhaust Fan Inboard Bearing Temperature Indication

Temperature indication is provided in the control room via ACV-TI-8180 and ACV-TI-8186 to inform the operator of the inboard bearing temperature of ACV-FAN-00001A and ACV-FAN-00001B, respectively. These indicators have high alarms to warn the operator that the inboard bearing lubrication is overheating.

4.1.6.1.3.33 Exhaust Fan Outboard Bearing Temperature Indication

Temperature indication is provided in the control room via ACV-TI-8182 and ACV-TI-8188 to inform the operator of the outboard bearing temperature of ACV-FAN-00001A and ACV-FAN-00001B, respectively. These indicators have high alarms to warn the operator that the outboard bearing lubrication is overheating.

4.1.6.1.3.34 Exhaust Air Temperature, Pressure, and Flow Indication

Temperature, pressure, and flow indication are provided in the control room via ACV-TI-8191, ACV-PI-8191, and ACV-FI-8191, respectively, to inform the operator of the properties of the air stream exhausted from the ACV system to the atmosphere through the EMF stack. ACV-FI-8191 has low alarms to warn the operator that the system is not providing the required exhaust air flow to meet the requirements of the ORD.

4.1.6.2 Control Capability and Locations

The following components are manually operated during normal operations and can be operated locally (at the panel/component):

4.1.6.2.1 DEP System Control Capability and Locations

- DEP-V-44462 and DEP-V-44647 are manually opened to provide demineralized water and plant service air, respectively, to DEP-HOOD-00001 during sampling campaigns.
- DEP-V-44212 is manually throttled to prevent cavitation of the demineralized water addition valve (DVP-YV-8117) supplying the DEP-VSL-00001 overflow loop seal.
- DEP-PMP-00042A and DEP-PMP-00042B are manually operated from DEP-PNL-00002 and DEP-PNL-00003, respectively, located near DEP-HOOD-00001 in room E-0102.

4.1.6.2.2 DVP System Control Capability and Locations

- The vessel balancing valves are manually positioned to align the flow rate from the headspace of the DEP system vessels to the established flow rate and then locked in position. DVP-V-00020 controls the flow rate from DEP-VSL-00001, DVP-V-00018 controls the flow rate from DEP-VSL-00002, DVP-V-00012/00014/00016 controls the flow rate from DEP-VSL-00003A/B/C, DVP-V-00006/00008 controls the flow rate from DEP-VSL-00004A/B, DVP-V-00002/00004 controls the flow rate from DEP-VSL-00005A/B, and DVP-V-00010 controls the flow rate from DEP-COND-00003.

4.1.6.2.3 ACV System Control Capability and Locations

There are no system features that require direct manual operation at the component location.

4.1.6.3 Automatic and Manual Actions

The following subsections describe the conditions under which important features are activated and whether these features are activated automatically or manually. For additional details, refer to the operating procedures that govern the operator responses to alarms.

Note: Sections marked with [*] are instances where the C&I control logic diagrams are not in alignment with the issued P&IDs. These sections are completed in accordance with the P&IDs and will be confirmed at a later document revision once the logic diagrams are re-issued.

4.1.6.3.1 DEP System Automatic and Manual Actions

4.1.6.3.1.1 Evaporator Feed Subsystem Automatic and Manual Actions

4.1.6.3.1.1.1 LAW RLD, LAW LVP, and Lab RLD Drain Valves

The drain valves on the transfer lines from the LAW RLD, LAW LVP, and Lab RLD systems to the EMF, DEP-YV-8101 (DEP-YC-8101), DEP-YV-8102 (DEP-YC-8102), and DEP-YV-8103 (DEP-YC-8103), are controlled in the manual mode. The operator can open and close the valves as needed to drain the transfer piping to the low point drain vessel (DEP-VSL-00001). [Reference: 24590-BOF-J3-DEP-70101]

4.1.6.3.1.1.2 Low Point Drain Vessel Agitator

The low point drain vessel agitator, DEP-AGT-00001 (DEP-YC-8104), is controlled in the manual mode. The operator can start and stop the unit as needed to mix the contents of DEP-VSL-00001 and to help prevent buildup of settled solids in the waste. [Reference: 24590-BOF-J3-DEP-70106]

4.1.6.3.1.1.3 Low Point Drain Vessel Loop Seal Valve*

The low point drain vessel loop seal valve, DEP-YV-8117 (DEP-YC-8117), can be controlled in either the manual or auto mode. When the valve is placed in the manual mode, the operator can open and close the valve as needed to add demineralized water to the loop seal. When it is operated in the auto mode, the valve is controlled by DEP-LSH-8113A. [Reference: 24590-BOF-J3-DEP-70104]

4.1.6.3.1.1.4 Low Point Drain Vessel Pumps

The low point drain vessel pumps, DEP-PMP-00001A/B (DEP-YC-8105/8107), can be controlled in either the manual or auto mode. When the pumps are placed in the manual mode, the operator can start and stop the pumps as needed to transfer DEP-VSL-00001 effluent to DEP-FILT-00003 or recirculate the vessel contents. When they are placed in the auto mode, the pumps are controlled by DEP-HS-8105. [Reference: 24590-BOF-J3-DEP-70102]

4.1.6.3.1.1.5 Low Point Drain Vessel Pump Handswitch

The low point drain vessel pump handswitch (DEP-HS-8105D) is operated manually to start and stop DEP-PMP-00001A/B. [Reference: 24590-BOF-J3-DEP-70003]

4.1.6.3.1.1.6 Low Point Drain Vessel Pump Flush Valve

The low point drain vessel pump flush valve, DEP-YV-8119 (DEP-YC-8119), can be controlled in either the manual or auto mode. When the valve is placed in the manual mode, the operator can open and close the valve as needed to flush the common discharge line from DEP-PMP-00001A/B with process condensate from DEP-VSL-00005A/B. When it is operated in the auto mode, the valve is controlled by DEP-HS-8199. [Reference: 24590-BOF-J3-DEP-70104]

4.1.6.3.1.1.7 Low Point Drain Vessel Recirculation Valve

The low point drain vessel recirculation valve, DEP-YV-8106 (DEP-YC-8106) is controlled in the manual mode. The operator can open and close the valve as needed to recirculate the contents of DEP-VSL-00001 for sampling. [Reference: 24590-BOF-J3-DEP-70103]

4.1.6.3.1.1.8 Low Point Drain Vessel Transfer Valve

The low point drain vessel transfer valve, DEP-YV-8108 (DEP-YC-8108), can be controlled in either the manual or auto mode. When the valve is placed in the manual mode, the operator can open and close the valve as needed to allow the transfer of DEP-VSL-00001 effluent to DEP-FILT-00003. When it is operated in the auto mode, the valve is controlled by DEP-HS-8199. [Reference: 24590-BOF-J3-DEP-70103]

4.1.6.3.1.1.9 Evaporator Feed Vessel Inlet Valve

The evaporator feed vessel inlet valve, DEP-YV-8152 (DEP-YC-8152), can be controlled in either the manual or auto mode. When the valve is placed in the manual mode, the operator can open and close the valve as needed to allow filtered effluent into DEP-VSL-00002. When it is operated in the auto mode, the valve is controlled by DEP-HS-8199. [Reference: 24590-BOF-J3-DEP-70201]

4.1.6.3.1.1.10 Evaporator Feed Vessel Sodium Hydroxide Valve

The evaporator feed vessel sodium hydroxide valve, DEP-YV-8151 (DEP-YC-8151), can be controlled in either the manual or auto mode. When the valve is placed in the manual mode, the operator can open and close the valve as needed to add caustic to DEP-VSL-00002. When it is operated in the auto mode, the valve is controlled by SHR-HS-8310. [Reference: 24590-BOF-J3-DEP-70201]

4.1.6.3.1.1.11 Evaporator Feed Vessel Recycled Condensate Valve

The evaporator feed vessel recycled condensate valve, DEP-YV-8153 (DEP-YC-8153), can be controlled in either the manual or auto mode. When the valve is placed in the manual mode, the operator can open and close the valve as needed to add off-specification recycled condensate from DEP-VSL-00004A/B to DEP-VSL-00002. When it is operated in the auto mode, the valve is controlled by DEP-HS-8323B. [Reference: 24590-BOF-J3-DEP-70202]

4.1.6.3.1.1.12 Evaporator Feed Vessel Transfer Pump Suction Valve

The evaporator feed vessel transfer pump suction valve, DEP-YV-8154 (DEP-YC-8154) is controlled manually. The operator can open and close the valve to enable the transfer of feed to DEP-EVAP-00001. [Reference: 24590-BOF-J3-DEP-70203]

4.1.6.3.1.1.13 Evaporator Feed Vessel Recirculation Pump Suction Valve

The evaporator feed vessel recirculation pump suction valve, DEP-YV-8155 (DEP-YC-8155) is controlled manually. The operator can open and close the valve to recirculate the contents of DEP-VSL-00002 through the vessel eductors. [Reference: 24590-BOF-J3-DEP-70203]

4.1.6.3.1.1.14 Evaporator Feed Vessel Transfer Pumps

The evaporator feed vessel transfer pumps, DEP-PMP-00002A/B (DEP-YC-8176/8179) can be controlled in either the manual or auto mode. When the pumps are placed in the manual mode, the operator can start and stop the pumps as needed to transfer evaporator feed from DEP-VSL-00002 to DEP-EVAP-00001. When they are operated in the auto mode, the pumps are controlled by DEP-HS-8176. [Reference: 24590-BOF-J3-DEP-70205]

4.1.6.3.1.1.15 Evaporator Feed Flow Control Valve

The evaporator feed flow control valve (DEP-LV-8211) is automatically controlled by DEP-FC-8182, based on inputs from DEP-LC-8211 and DEP-FI-8182. [Reference: 24590-BOF-J3-DEP-71206]

4.1.6.3.1.1.16 Evaporator Feed Totalizer

The evaporator feed totalizer (DEP-FQI-8182) can be manually reset using its associated handswitch. [Reference: 24590-BOF-J3-DEP-71206]

4.1.6.3.1.1.17 Evaporator Feed Vessel Recirculation Pumps

The evaporator feed vessel recirculation pumps, DEP-PMP-00012A/B/C (DEP-YC-8160/8163/8166) can be controlled in either the manual or auto mode. When the pumps are placed in the manual mode, the operator can start and stop the pumps as needed to recirculate the contents of DEP-VSL-00002 through the vessel eductors. When they are operated in the auto mode, the pumps are controlled by DEP-HS-8160. [Reference: 24590-BOF-J3-DEP-70204]

4.1.6.3.1.1.18 Evaporator Feed Vessel Recirculation Pump Handswitch

The evaporator feed vessel recirculation pump handswitch (DEP-HS-8160D) is operated manually to start and stop DEP-PMP-00012A/B/C. The operator can choose whether to recirculate the contents of DEP-VSL-00002 or transfer conditioned effluent to Tank Farms. [Reference: 24590-BOF-J3-DEP-70003]

4.1.6.3.1.1.19 Evaporator Feed Vessel Mixing & Transfer Handswitch

The evaporator feed vessel mixing and transfer handswitch (DEP-HS-8902) is operated manually to select whether to recirculate the contents of DEP-VSL-00002 through eductors for mixing or to transfer the vessel contents to Tank Farms. The handswitch can be manually reset after the selected operation has completed. [Reference: 24590-BOF-J3-DEP-70218]

4.1.6.3.1.1.20 Evaporator Feed Vessel Eductor Supply Valve

The evaporator feed vessel eductor supply valve (DEP-FV-8172) is automatically controlled by DEP-FC-8172, based on input from DEP-FI-8172, DEP-LI-8156, and whether vessel mixing is selected using DEP-HS-8902. [Reference: 24590-BOF-J3-DEP-71203]

4.1.6.3.1.1.21 Evaporator Feed Vessel Eductor Flow Totalizer

The evaporator feed vessel eductor flow totalizer (DEP-FQI-8172) is manually reset using its associated handswitch after the vessel contents are mixed for an appropriate amount of time. [Reference: 24590-BOF-J3-DEP-71204]

4.1.6.3.1.1.22 Tank Farm Transfer Flow Control Valve

The tank farm transfer flow control valve (DEP-FV-8908) is automatically controlled by DEP-FC-8908, based on input from DEP-FI-8908 and whether a tank farm transfer is selected using DEP-HS-8902. [Reference: 24590-BOF-J3-DEP-71205]

4.1.6.3.1.1.23 Tank Farm Transfer Flow Totalizer

The tank farm transfer flow totalizer (DEP-FQI-8908) is manually reset using its associated handswitch after the transfer volume reaches a predetermined setpoint and DEP-PMP-00012A/B/C are stopped. [Reference: 24590-BOF-J3-DEP-71205]

4.1.6.3.1.1.24 Evaporator Feed Mixing Valve

The evaporator feed mixing valve, DEP-YV-8912 (DEP-YC-8912), can be controlled in either the manual or auto mode. When the valve is placed in the manual mode, the operator can open and close the valve as needed to transfer evaporator feed from DEP-VSL-00002 to Tank Farms via DEP-HX-00001. When it is operated in the auto mode, the valve is controlled by DEP-HS-8902. [Reference: 24590-BOF-J3-DEP-70210]

4.1.6.3.1.1.25 Filtered Concentrate Mixing Valve

The filtered concentrate mixing valve, DEP-YV-8911 (DEP-YC-8911), can be controlled in either the manual or auto mode. When the valve is placed in the manual mode, the operator can open and close the valve as needed to transfer off-specification concentrate from DEP-VSL-00003A/B/C to Tank Farms via DEP-HX-00001. When it is operated in the auto mode, the valve is controlled by DEP-HS-8431B. [Reference: 24590-BOF-J3-DEP-70210]

4.1.6.3.1.1.26 Demineralized Water Mixing Valve

The demineralized water mixing valve, DEP-YV-8913 (DEP-YC-8913), is controlled manually. The operator can open and close the valve to flush the effluent return line to Tank Farms. [Reference: 24590-BOF-J3-DEP-70211]

4.1.6.3.1.1.27 Process Condensate Mixing Valve

The process condensate mixing valve, DEP-YV-8914 (DEP-YC-8914), can be controlled in either the manual or auto mode. When the valve is placed in the manual mode, the operator can open and close the valve as needed to dilute the evaporator feed/concentrate transferred from DEP-VSL-00003A/B/C to Tank Farms. When it is operated in the auto mode, the valve is controlled by DEP-HS-8431B. [Reference: 24590-BOF-J3-DEP-70211]

4.1.6.3.1.1.28 Sodium Nitrite Mixing Valve

The sodium nitrite mixing valve, DEP-YV-8915 (DEP-YC-8915), can be controlled in either the manual or auto mode. When the valve is placed in the manual mode, the operator can open and close the valve as needed to add sodium nitrite to the evaporator feed/concentrate stream transferred to Tank Farms in accordance with ICD-31 requirements. When it is operated in the auto mode, the valve is controlled by DEP-HS-8902 and DEP-HS-8431B. [Reference: 24590-BOF-J3-DEP-70212]

4.1.6.3.1.1.29 Effluent Cooler Flow Control Valve

The effluent cooler flow control valve (DEP-FV-8910) is automatically controlled by DEP-FC-8910, based on input from DEP-FI-8909, DEP-FI-8910 and whether a tank farm transfer is selected using DEP-HS-8431B. [Reference: 24590-BOF-J3-DEP-71208]

4.1.6.3.1.1.30 Process Condensate Flow Totalizer

The process condensate flow totalizer (DEP-FQI-8910) is manually reset using its associated handswitch after the transfer of evaporator feed/concentrate to Tank Farms has completed. [Reference: 24590-BOF-J3-DEP-71208]

4.1.6.3.1.1.31 Effluent Cooler Discharge Valve

The effluent cooler discharge valve, DEP-YV-8405 (DEP-YC-8405), can be controlled in either the manual or auto mode. When the valve is placed in the manual mode, the operator can open and close the valve as needed to transfer conditioned effluent to Tank Farms. When it is operated in the auto mode, the valve is controlled by DEP-HS-8902 and DEP-HS-8431B. [Reference: 24590-BOF-J3-DEP-70213]

4.1.6.3.1.1.32 Effluent Cooler Drain Valve

The effluent cooler drain valve, DEP-YV-8409 (DEP-YC-8409), can be controlled in either the manual or auto mode. When the valve is placed in the manual mode, the operator can open and close the valve as needed to divert the Tank Farms transfer line to DEP-VSL-00001. When it is operated in the auto mode, the valve is controlled by DEP-HS-8431A and DEP-HS-8431B. [Reference: 24590-BOF-J3-DEP-70213/70515]

4.1.6.3.1.1.33 Plant Cooling Water Return Valve

The plant cooling water return valve, DEP-YV-8412 (DEP-YC-8412), is controlled manually. The operator can open and close the valve to return water to the PCW system from DEP-HX-00001. [Reference: 24590-BOF-J3-DEP-70213]

4.1.6.3.1.1.34 Effluent Cooler Discharge Flow Totalizer*

The effluent cooler discharge flow totalizer (DEP-FQI-8404) is manually reset using its associated handswitch after the transfer from DEP-HX-00001 to Tank Farms has completed. [Reference: TBD]

4.1.6.3.1.1.35 Evaporator Feed Prefilter Air Supply Valve

The evaporator feed prefilter air supply valve, DEP-YV-8184 (DEP-YC-8184), can be controlled in either the manual or auto mode. When the valve is placed in the manual mode, the operator can open and close the valve as needed to backflush DEP-FILT-00003 with air from the PSA system. When it is operated in the auto mode, the valve is controlled by DEP-UK-8901. [Reference: 24590-BOF-J3-DEP-70206]

4.1.6.3.1.1.36 Evaporator Feed Prefilter Lab Effluent Supply Valve

The evaporator feed prefilter Lab effluent supply valve, DEP-YV-8188 (DEP-YC-8188), can be controlled in either the manual or auto mode. When the valve is placed in the manual mode, the operator can open and close the valve as needed to transfer Lab RLD system effluent to DEP-VSL-00002 through DEP-FILT-00003. When it is operated in the auto mode, the valve is controlled by DEP-HS-8199. [Reference: 24590-BOF-J3-DEP-70207]

4.1.6.3.1.1.37 Evaporator Feed Prefilter LAW Effluent Supply Valve

The evaporator feed prefilter LAW effluent supply valve, DEP-YV-8189 (DEP-YC-8189), can be controlled in either the manual or auto mode. When the valve is placed in the manual mode, the operator can open and close the valve as needed to transfer LAW RLD system effluent to DEP-VSL-00002 through DEP-FILT-00003. When it is operated in the auto mode, the valve is controlled by DEP-HS-8199. [Reference: 24590-BOF-J3-DEP-70207]

4.1.6.3.1.1.38 Evaporator Feed Prefilter Low Point Drain Supply Valve*

The evaporator feed prefilter low point drain supply valve, DEP-YV-8186 (DEP-YC-8186), can be controlled in either the manual or auto mode. When the valve is placed in the manual mode, the operator can open and close the valve as needed to transfer DEP-VSL-00001 and DEP-SUMP-00001 effluent to DEP-VSL-00002 through DEP-FILT-00003. When it is operated in the auto mode, the valve is controlled by TBD. [Reference: TBD]

4.1.6.3.1.1.39 Evaporator Feed Prefilter RLD Effluent Supply Valve*

The evaporator feed prefilter RLD effluent supply valve, DEP-YV-8187 (DEP-YC-8187), can be controlled in either the manual or auto mode. When the valve is placed in the manual mode, the operator can open and close the valve as needed to transfer RLD system (LAW and Lab) effluent to DEP-VSL-00002 through DEP-FILT-00003. When it is operated in the auto mode, the valve is controlled by TBD. [Reference: TBD]

4.1.6.3.1.1.40 Evaporator Feed Prefilter Backflush Valve*

The evaporator feed prefilter backflush valve, DEP-YV-8190 (DEP-YC-8190), can be controlled in either the manual or auto mode. When the valve is placed in the manual mode, the operator can open and close the valve as needed to backflush solids in DEP-FILT-00003 to DEP-VSL-00003A/B/C. When it is operated in the auto mode, the valve is controlled by TBD. [Reference: 24590-BOF-J3-DEP-70219]

4.1.6.3.1.1.41 Evaporator Feed Prefilter Handswitch

The evaporator feed prefilter handswitch (DEP-HS-8199) is operated manually to align DEP system valves to allow transfers through DEP-FILT-00003. [Reference: 24590-BOF-J3-DEP-70214]

4.1.6.3.1.1.42 Evaporator Feed Prefilter Backflush Sequence

DEP-UK-8901 is the automated sequence controller and interface for DEP-FILT-00003 backflushes and is used to transfer entrained solids to DEP-VSL-00003A/B/C using air from the PSA system. When the sequence handswitch is placed in the auto mode, the sequence is initiated by input from DEP-PI-8194 and DEP-PDI-8192. The sequence can also be started manually. [Reference: 24590-BOF-J3-DEP-72201001/2/3/4]

4.1.6.3.1.2 Evaporator Process Subsystem Automatic and Manual Actions

4.1.6.3.1.2.1 Evaporator Recirculation Pump*

The evaporator recirculation pump, DEP-PMP-00017 (DEP-YC-8213) can be controlled in either the manual or auto mode. When the pump is placed in the manual mode, the operator can start and stop the pump as needed to recirculate the concentrated effluent in DEP-EVAP-00001 through DEP-RBLR-00001. When it is operated in the auto mode, the pump is controlled by TBD. [Reference: 24590-BOF-J3-DEP-70303]

4.1.6.3.1.2.2 Evaporator Mesh Spray Flow Control Valve

The evaporator mesh spray flow control valve (DEP-FV-8203) is automatically controlled by DEP-FC-8203, based on input from DEP-FI-8203 and whether DEP-YV-8204 is open. [Reference: 24590-BOF-J3-DEP-71301]

4.1.6.3.1.2.3 Evaporator Mesh Spray Valve

The evaporator mesh spray valve, DEP-YV-8204 (DEP-YC-8204), is controlled in the manual mode. The operator can open and close the valve to allow for the continuous washing of the bottom of the evaporator mesh pad. [Reference: 24590-BOF-J3-DEP-70301]

4.1.6.3.1.2.4 Evaporator Anti-foam Addition Valve

The evaporator anti-foam addition valve, DEP-YV-8205 (DEP-YC-8205), is controlled in the manual mode. The operator can open and close the valve to prevent foam accumulation in DEP-EVAP-00001. [Reference: 24590-BOF-J3-DEP-70302]

4.1.6.3.1.2.5 Evaporator Purge Air Valve

The evaporator purge air valve, DEP-YV-8287 (DEP-YC-8287), is controlled in the manual mode. The operator can open and close the valve to break the vacuum of the evaporator system for maintenance activities. [Reference: 24590-BOF-J3-DEP-70304]

4.1.6.3.1.2.6 Evaporator Pressure Control Valve

The evaporator pressure control valve (DEP-PV-8209) is automatically controlled by DEP-PC-8209, based on input from DEP-PI-8209. [Reference: 24590-BOF-J3-DEP-71303]

4.1.6.3.1.2.7 Reboiler Temperature Control*

The temperature of the reboiler and evaporator is automatically controlled by DEP-TC-8214, based on input from DEP-TI-8214. The temperature controller uses the temperature input to throttle the steam control valve in the HPS system. [Reference: 24590-BOF-J3-DEP-71305]

4.1.6.3.1.2.8 Reboiler Level Control Valve

The reboiler level control valve (DEP-LV-8216) is automatically controlled by DEP-LC-8216, based on input from DEP-LI-8216 and DEP-CI-8218. [Reference: 24590-BOF-J3-DEP-71306]

4.1.6.3.1.2.9 Evaporator Concentrate Discharge Pumps

The evaporator concentrate discharge pumps, DEP-PMP-00007A/B (DEP-YC-8222/8225) can be controlled in either the manual or auto mode. When the pumps are placed in the manual mode, the operator can start and stop the pumps as needed to monitor the concentrate at DEP-SKID-00005 and eventually transfer the solution to DEP-VSL-00003A/B/C. When they are operated in the auto mode, the pumps are controlled by DEP-HS-8222. [Reference: 24590-BOF-J3-DEP-70306]

4.1.6.3.1.2.10 Evaporator Concentrate Handswitch

The evaporator concentrate handswitch (DEP-HS-8220) is operated manually to select the destination vessel for DEP-EVAP-00001 concentrate. The operator can select DEP-VSL-00003A, DEP-VSL-00003B, DEP-VSL-00003C, or reset the switch. [Reference: 24590-BOF-J3-DEP-70308]

4.1.6.3.1.2.11 Evaporator Concentrate Flow and Density Control Valves*

The evaporator concentrate flow control valves (DEP-FV-8227A/B) and density control valve (DEP-DV-8228) can be controlled in either the manual or auto mode. When the valves are placed in the manual mode using DEP-HK-8227A, DEP-HK-8227B, and DEP-HK-8228, respectively, the operator can change the setpoint of the density control valve and set the flow control valve percentage to a desired value. Additionally, DEP-FV-8227B can be operated manually using DEP-YC-8227B. When they are operated in the auto mode, the valves are controlled by the density, radiation, and flow programmable logic controller (DEP-UC-8233), based on inputs from DEP-FT-8227, DEP-FT-8228, and DEP-RT-8229. [Reference: 24590-BOF-J3-DEP-71308]

4.1.6.3.1.2.12 Off-Specification Evaporator Concentrate Totalizer

The off-specification evaporator concentrate totalizer (DEP-FQI-8227) is manually reset using its associated handswitch after the transfer of concentrate from DEP-PMP-00007A/B to DEP-VSL-00002 has completed. [Reference: 24590-BOF-J3-DEP-71307]

4.1.6.3.1.2.13 Evaporator Concentrate Totalizer

The evaporator concentrate totalizer (DEP-FQI-8230) is manually reset using its associated handswitch. [Reference: 24590-BOF-J3-DEP-71307]

4.1.6.3.1.2.14 Off-Specification Evaporator Concentrate Drain Valve

The off-specification evaporator concentrate drain valve, DEP-YV-8285 (DEP-YC-8285), can be controlled in either the manual or auto mode. When the valve is placed in the manual mode, the operator can open and close the valve to drain the remaining off-specification concentrate and flush water in the off-specification transfer line to DEP-VSL-00001. When it is operated in the auto mode, the valve is controlled by DEP-FV-8227B. [Reference: 24590-BOF-J3-DEP-70307]

4.1.6.3.1.2.15 Steam Ejector Inlet Valve

The steam ejector inlet valve, DEP-YV-8234 (DEP-YC-8234), is controlled in the manual mode. The operator can open and close the valve to transfer high pressure steam to DEP-EJCTR-00001A/B and DEP-EJCTR-00002A/B from the HPS system. [Reference: 24590-BOF-J3-DEP-70309]

4.1.6.3.1.2.16 Steam Ejector Purge Air Valve

The steam ejector purge air valve, DEP-YV-8248 (DEP-YC-8248), is controlled in the manual mode. The operator can open and close the valve to break the vacuum of the steam ejector system for maintenance activities. [Reference: 24590-BOF-J3-DEP-70309]

4.1.6.3.1.2.17 Condenser Inlet Valve

The condenser inlet valve, DEP-YV-8217 (DEP-YC-8217), is controlled in the manual mode. The operator can open and close the valve to transfer cooling water to DEP-COND-00001/2/3 from the PCW system. [Reference: 24590-BOF-J3-DEP-70309]

4.1.6.3.1.2.18 Steam Ejector Pressure Control Valve*

The steam ejector pressure control valve (DEP-PV-8241A) is automatically controlled by DEP-PC-8241, based on input from DEP-PI-8241. [Reference: 24590-BOF-J3-DEP-71310]

4.1.6.3.1.2.19 Evaporator Condensate Pumps

The evaporator condensate pumps, DEP-PMP-00006A/B (DEP-YC-8258/8259) can be controlled in either the manual or auto mode. When the pumps are placed in the manual mode, the operator can start and stop the pumps as needed to transfer DEP-COND-00001 condensate to the downstream users. When they are operated in the auto mode, the pumps are controlled by DEP-HS-8258. [Reference: 24590-BOF-J3-DEP-70311]

4.1.6.3.1.2.20 Condenser Transfer Level Control Valve

The condenser transfer level control valve (DEP-LV-8251A) is automatically controlled by DEP-LC-8251A, based on input from DEP-LI-8251, DEP-CI-8257, and the position of DEP-YV-8301/8308. [Reference: 24590-BOF-J3-DEP-71311]

4.1.6.3.1.2.21 Condenser Recirculation Level Control Valve

The condenser recirculation level control valve (DEP-LV-8251B) is automatically controlled by DEP-LC-8251B, based on input from DEP-LI-8251, DEP-CI-8257, and the position of DEP-YV-8301/8308 and DEP-LV-8251B. [Reference: 24590-BOF-J3-DEP-71311]

4.1.6.3.1.2.22 Reboiler Condensate Make-Up Valve*

The reboiler condensate make-up valve, DEP-YV-8219 (DEP-YC-8219), can be controlled in either the manual or auto mode. When the valve is placed in the manual mode, the operator can open and close the valve to add demineralized water from the DIW system to DEP-VSL-00008. When it is operated in the auto mode, the valve is controlled by DEP-LI-8274. [Reference: 24590-BOF-J3-DEP-70313]

4.1.6.3.1.2.23 Reboiler Condensate Pumps*

The reboiler condensate pumps, DEP-PMP-00008A/B (DEP-YC-8269) can be controlled in either the manual or auto mode. When the pumps are placed in the manual mode, the operator can start and stop the pumps as needed to transfer reboiler condensate from DEP-VSL-00008 to the SCW system. When they are operated in the auto mode, the pumps are controlled by DEP-LI-8274. [Reference: 24590-BOF-J3-DEP-70314]

4.1.6.3.1.2.24 Reboiler Condensate Transfer Valve

The reboiler condensate transfer valve, DEP-YV-8275 (DEP-YC-8275), is controlled in the manual mode. The operator can open and close the valve to allow the transfer of reboiler condensate from DEP-VSL-00008 to the SCW system. [Reference: 24590-BOF-J3-DEP-70313]

4.1.6.3.1.2.25 Contaminated Reboiler Condensate Transfer Valve

The contaminated reboiler condensate transfer valve, DEP-YV-8276 (DEP-YC-8276), is controlled in the manual mode. The operator can open and close the valve to allow the transfer of contaminated reboiler condensate from DEP-VSL-00008 to DEP-VSL-00002. [Reference: 24590-BOF-J3-DEP-70313]

4.1.6.3.1.3 Evaporator Discharge Subsystem Automatic and Manual Actions

4.1.6.3.1.3.1 Evaporator Concentrate Vessel Backflush Inlet Valves

The evaporator concentrate vessel backflush inlet valves, DEP-YV-8196/8197/8198 (DEP-YC-8196/8197/8198), can be controlled in either the manual or auto mode. When the valves are placed in the manual mode, the operator can open and close the valves as needed to transfer DEP-FILT-00003 solids to DEP-VSL-00003A/B/C, respectively. When they are operated in the auto mode, the valves are controlled by DEP-HS-8220 and DEP-UK-8901. [Reference: 24590-BOF-J3-DEP-70208/70209]

4.1.6.3.1.3.2 Evaporator Feed Prefilter Concentrate Supply Valve

The evaporator feed prefilter concentrate supply valve, DEP-YV-8397 (DEP-YC-8397), can be controlled in either the manual or auto mode. When the valve is placed in the manual mode, the operator can open and close the valve as needed to transfer evaporator concentrate from DEP-VSL-00003A/B/C to Tank Farms through DEP-FILT-00003. When it is operated in the auto mode, the valve is controlled by DEP-HS-8431B. [Reference: 24590-BOF-J3-DEP-70510]

4.1.6.3.1.3.3 Evaporator Concentrate Vessels Supply Handswitch*

The evaporator concentrate vessels supply handswitch (DEP-HS-8431A) is operated manually to select the evaporator concentrate vessel (DEP-VSL-00003A/B/C) to empty or flush. The operator can choose which vessel to discharge from, to flush the vessel discharge line with process condensate, or reset the handswitch. [Reference: 24590-BOF-J3-DEP-70501]

4.1.6.3.1.3.4 Evaporator Concentrate Vessel Inlet Valves

The evaporator concentrate vessel inlet valves, DEP-YV-8353/8364/8375 (DEP-YC-8353/8364/8375), can be controlled in either the manual or auto mode. When the valves are placed in the manual mode, the operator can open and close the valves as needed to fill DEP-VSL-00003A/B/C with concentrate from DEP-EVAP-00001. When they are operated in the auto mode, the valves are controlled by DEP-HS-8220. [Reference: 24590-BOF-J3-DEP-70503/70505/70507]

4.1.6.3.1.3.5 Evaporator Concentrate Vessel Sodium Hydroxide Valves

The evaporator concentrate vessel sodium hydroxide valves, DEP-YV-8354/8367/8378 (DEP-YC-8354/8367/8378), can be controlled in either the manual or auto mode. When the valves are placed in the manual mode, the operator can open and close the valves to transfer sodium hydroxide from the SHR system to DEP-VSL-00003A/B/C. When they are operated in the auto mode, the valves are controlled by SHR-HS-8310. [Reference: 24590-BOF-J3-DEP-70503/70505/70507]

4.1.6.3.1.3.6 Evaporator Concentrate Vessel Outlet Valves

The evaporator concentrate vessel outlet valves, DEP-YV-8360/8371/8382 (DEP-YC-8360/8371/8382), can be controlled in either the manual or auto mode. When the valves are placed in the manual mode, the operator can open and close the valves to transfer DEP-VSL-00003A/B/C concentrate to the downstream users. When they are operated in the auto mode, the valves are controlled by DEP-HS-8431A. [Reference: 24590-BOF-J3-DEP-70504/70506/70508]

4.1.6.3.1.3.7 Evaporator Concentrate Vessel Flush Valve

The evaporator concentrate vessel flush valve, DEP-YV-8361 (DEP-YC-8361), can be controlled in either the manual or auto mode. When the valve is placed in the manual mode, the operator can open and close the valve to flush the DEP-VSL-00003A/B/C combined outlet line with process condensate from DEP-VSL-00005A/B. When it is operated in the auto mode, the valve is controlled by DEP-HS-8431A. [Reference: 24590-BOF-J3-DEP-70504]

4.1.6.3.1.3.8 Evaporator Concentrate Transfer/Recirculation Pumps

The evaporator concentrate transfer/recirculation pumps, DEP-PMP-00003A/B (DEP-YC-8386/8391) can be controlled in either the manual or auto mode. When the pumps are placed in the manual mode, the operator can start and stop the pumps as needed to transfer DEP-VSL-00003A/B/C concentrate to the LAW Facility or recirculate the vessel contents through eductors for mixing. When they are operated in the auto mode, the pumps are controlled by DEP-HS-8386. [Reference: 24590-BOF-J3-DEP-70509]

4.1.6.3.1.3.9 Evaporator Concentrate Transfer/Recirculation Pump Handswitch

The evaporator concentrate transfer/recirculation pump handswitch (DEP-HS-8386D) is operated manually to start and stop DEP-PMP-00003A/B. The operator can choose whether to start the pumps for normal operations, initiate a transfer of concentrate to Tank Farms in the event that the LAW Facility is unavailable for transfers, or stop the pumps. [Reference: 24590-BOF-J3-DEP-70003]

4.1.6.3.1.3.10 Evaporator Concentrate Vessels Transfer Handswitch

The evaporator concentrate vessels transfer handswitch (DEP-HS-8431B) is operated manually to either select the evaporator concentrate vessel (DEP-VSL-00003A/B/C) to mix, transfer concentrate to the LAW Facility, transfer concentrate to Tank Farms through DEP-FILT-00003, or reset the handswitch. [Reference: 24590-BOF-J3-DEP-70515]

4.1.6.3.1.3.11 Concentrate to LAW Flow Control Valve

The concentrate to LAW flow control valve (DEP-FV-8395) is automatically controlled by DEP-FC-8395, based on input from DEP-FI-8395 and whether a LAW transfer is selected using DEP-HS-8431B. [Reference: 24590-BOF-J3-DEP-71507]

4.1.6.3.1.3.12 Concentrate to LAW Flow Totalizer

The concentrate to LAW flow totalizer (DEP-FQI-8395) is manually reset using its associated handswitch after the transfer of concentrate from DEP-PMP-00003A/B to the LAW Facility has completed. [Reference: 24590-BOF-J3-DEP-71507]

4.1.6.3.1.3.13 Evaporator Concentrate Vessel Transfer Valve

The evaporator concentrate vessel transfer valve, DEP-YV-8396 (DEP-YC-8396), can be controlled in either the manual or auto mode. When the valve is placed in the manual mode, the operator can open and close the valve to allow the transfer of evaporator concentrate to the LAW Facility. When it is operated in the auto mode, the valve is controlled by DEP-HS-8431B. [Reference: 24590-BOF-J3-DEP-70510]

4.1.6.3.1.3.14 Concentrate to Tank Farms Flow Control Valve

The concentrate to Tank Farms flow control valve (DEP-FV-8909) is automatically controlled by DEP-FC-8909, based on input from DEP-FI-8909 and whether a Tank Farms transfer is selected using DEP-HS-8431B. [Reference: 24590-BOF-J3-DEP-71508]

4.1.6.3.1.3.15 Concentrate to Tank Farms Flow Totalizer

The concentrate to Tank Farms flow totalizer (DEP-FQI-8909) is manually reset using its associated handswitch after the transfer of concentrate from DEP-PMP-00003A/B to Tank Farms has completed. [Reference: 24590-BOF-J3-DEP-71508]

4.1.6.3.1.3.16 TOC Transfer Valve

The TOC transfer valve, DEP-YV-8679 (DEP-YC-8679), can be controlled in either the manual or auto mode. When the valve is placed in the manual mode, the operator can open and close the valve to allow the transfer of treated feed from the TOC to the LAW Facility. When it is operated in the auto mode, the valve is controlled by DEP-YC-8684. [Reference: 24590-BOF-J3-DEP-70001]

4.1.6.3.1.3.17 TOC Drain Valve

The TOC drain valve, DEP-YV-8682 (DEP-YC-8682), can be controlled in either the manual or auto mode. When the valve is placed in the manual mode, the operator can open and close the valve to drain the combined DEP/TOC transfer line to DEP-VSL-00001. When it is operated in the auto mode, the valve is controlled by DEP-FQI-8677A and DEP-HS-8431B. [Reference: 24590-BOF-J3-DEP-70001]

4.1.6.3.1.3.18 LAW Facility Transfer Valve

The LAW Facility transfer valve, DEP-YV-8683 (DEP-YC-8683), can be controlled in either the manual or auto mode. When the valve is placed in the manual mode, the operator can open and close the valve to allow the transfer of the TOC feed and DEP-EVAP-00001 concentrate to the LAW Facility. When it is operated in the auto mode, the valve is controlled by DEP-YC-8684, DEP-HS-8431B, and SHR-HS-8310. [Reference: 24590-BOF-J3-DEP-70001]

4.1.6.3.1.3.19 TOC Flow Totalizers

The TOC flow totalizers (DEP-FQI-8677A/B) are manually reset using their associated handswitches after the transfer of feed and flush water, respectively, from the TOC is complete. [Reference: 24590-BOF-J3-DEP-71001]

4.1.6.3.1.3.20 DEP Transfer Line Event Controller

The DEP transfer line event controller (DEP-YC-8684) is operated manually using its associated handswitches to align the transfer valves and establish a flow path from the TOC and EMF to the LAW Facility. [Reference: 24590-BOF-J3-DEP-70002]

4.1.6.3.1.3.21 Evaporator Concentrate Vessel Recirculation Flow Control Valve

The evaporator concentrate vessel recirculation flow control valve (DEP-FV-8423) is automatically controlled by DEP-FC-8423, based on input from DEP-FI-8423, DEP-HS-8431B, and eductor flow setpoints. [Reference: 24590-BOF-J3-DEP-71505]

4.1.6.3.1.3.22 Evaporator Concentrate Vessel Eductor Flow Control Valve

The evaporator concentrate vessel eductor flow control valve (DEP-FV-8427) is automatically controlled by DEP-FC-8427, based on input from DEP-FI-8427, DEP-HS-8431B, and eductor flow setpoints. [Reference: 24590-BOF-J3-DEP-71506]

4.1.6.3.1.3.23 Evaporator Concentrate Vessel Mixing Totalizer*

The evaporator concentrate vessel mixing totalizer (DEP-FQI-8427) is manually reset using its associated handswitch after the eductor mixing setpoint of DEP-VSL-00003A/B/C is reached. [Reference: 24590-BOF-J3-DEP-71505]

4.1.6.3.1.3.24 Evaporator Concentrate Vessel Recirculation Valves*

The evaporator concentrate vessel recirculation valves, DEP-YV-8424/8425/8426 (DEP-YC-8424/8425/8426), can be controlled in either the manual or auto mode. When the valves are placed in the manual mode, the operator can open and close the valves to establish a minimum recirculation loop during DEP-PMP-00003A/B transfers. When they are operated in the auto mode, the valves are controlled by DEP-HS-8431A. [Reference: 24590-BOF-J3-DEP-70512/70513/70514]

4.1.6.3.1.3.25 Evaporator Concentrate Vessel Eductor Valves*

The evaporator concentrate vessel eductor valves, DEP-YV-8428/8429/8430 (DEP-YC-8428/8429/8430), can be controlled in either the manual or auto mode. When the valves are placed in the manual mode, the operator can open and close the valves to establish a flow path for DEP-VSL-00003A/B/C eductor mixing. When they are operated in the auto mode, the valves are controlled by DEP-HS-8431B. [Reference: 24590-BOF-J3-DEP-70512/70513/70514]

4.1.6.3.1.3.26 Overhead Sampling Vessel Inlet Valves

The overhead sampling vessel inlet valves, DEP-YV-8301/8308 (DEP-YC-8301/8308), can be controlled in either the manual or auto mode. When the valves are placed in the manual mode, the operator can open and close the valves to allow the transfer of evaporator condensate from DEP-PMP-00006A/B to DEP-VSL-00004A/B. When they are operated in the auto mode, the valves are controlled by DEP-LI-8305/8312. [Reference: 24590-BOF-J3-DEP-70405/70408]

4.1.6.3.1.3.27 Overhead Sampling Vessel LVP Valves

The overhead sampling vessel LVP valves, DEP-YV-8302/8309 (DEP-YC-8302/8309), are controlled in the manual mode. The operator can open and close the valves to allow the transfer of condensate from the LAW LVP system to DEP-VSL-00004A/B. [Reference: 24590-BOF-J3-DEP-70405/70408]

4.1.6.3.1.3.28 Overhead Sampling Vessel Off-Specification Condensate Valves

The overhead sampling vessel off-specification condensate valves, DEP-YV-8316/8318 (DEP-YC-8316/8318), can be controlled in either the manual or auto mode. When the valves are placed in the manual mode, the operator can open and close the valves to return off-specification condensate from DEP-VSL-00005A/B to DEP-VSL-00004A/B. When they are operated in the auto mode, the valves are controlled by DEP-HS-8480B. [Reference: 24590-BOF-J3-DEP-70405/70408]

4.1.6.3.1.3.29 Overhead Sampling Vessel Eductor Valves

The overhead sampling vessel eductor valves, DEP-YV-8304/8311 (DEP-YC-8304/8311), can be controlled in either the manual or auto mode. When the valves are placed in the manual mode, the operator can open and close the valves to mix the DEP-VSL-00004A/B contents through eductors. When they are operated in the auto mode, the valves are controlled by DEP-HS-8323B. [Reference: 24590-BOF-J3-DEP-70404/70407]

4.1.6.3.1.3.30 Overhead Sampling Vessel Outlet Valves

The overhead sampling vessel outlet valves, DEP-YV-8307/8314 (DEP-YC-8307/8314), can be controlled in either the manual or auto mode. When the valves are placed in the manual mode, the operator can open and close the valves to empty DEP-VSL-00004A/B. When they are operated in the auto mode, the valves are controlled by DEP-HS-8323B. [Reference: 24590-BOF-J3-DEP-70406/70409]

4.1.6.3.1.3.31 Overhead Sampling Vessel Transfer/Recirculation Pumps

The overhead sampling vessel transfer/recirculation pumps, DEP-PMP-00004A/B/C (DEP-YC-8315/8317/8319) can be controlled in either the manual or auto mode. When the pumps are placed in the manual mode, the operator can start and stop the pumps as needed to transfer DEP-VSL-00004A/B condensate to DEP-VSL-00005A/B or recirculate the vessel contents through eductors for mixing. When they are operated in the auto mode, the pumps are controlled by DEP-HS-8315. [Reference: 24590-BOF-J3-DEP-70403]

4.1.6.3.1.3.32 Overhead Sampling Vessel Transfer/Recirculation Pump Handswitch

The overhead sampling vessel transfer/recirculation pump handswitch (DEP-HS-8315D) is operated manually to start and stop DEP-PMP-00004A/B/C. [Reference: 24590-BOF-J3-DEP-70003]

4.1.6.3.1.3.33 Overhead Sampling Vessels Supply Handswitch

The overhead sampling vessels supply handswitch (DEP-HS-8323A) is operated manually to select the evaporator concentrate vessel (DEP-VSL-00004A/B) to empty. The operator can choose which vessel to discharge from or can reset the handswitch. [Reference: 24590-BOF-J3-DEP-70402]

4.1.6.3.1.3.34 Overhead Sampling Vessels Transfer Handswitch

The overhead sampling vessels transfer handswitch (DEP-HS-8323B) is operated manually to either select the overhead sampling vessel (DEP-VSL-00004A/B) to mix, transfer off-specification condensate to DEP-VSL-00002, transfer mixed and sampled condensate to DEP-VSL-00005A or DEP-VSL-00005B, or reset the handswitch. [Reference: 24590-BOF-J3-DEP-70401]

4.1.6.3.1.3.35 Overhead Sampling Vessel Flow Totalizer

The overhead sampling vessel flow totalizer (DEP-FQI-8321) is manually reset using its associated handswitch after the batch transfer from DEP-VSL-00004A/B is complete. [Reference: 24590-BOF-J3-DEP-71404]

4.1.6.3.1.3.36 Overhead Sampling Vessel Transfer Flow Control Valve

The overhead sampling vessel transfer flow control valve (DEP-FV-8321A) is automatically controlled by DEP-FC-8321A, based on input from DEP-FI-8321 and DEP-HS-8323B. [Reference: 24590-BOF-J3-DEP-71404]

4.1.6.3.1.3.37 Overhead Sampling Vessel Eductor Flow Control Valve

The overhead sampling vessel eductor flow control valve (DEP-FV-8321B) is automatically controlled by DEP-FC-8321B, based on input from DEP-FI-8321, DEP-HS-8323B, and eductor mixing setpoints. [Reference: 24590-BOF-J3-DEP-71404]

4.1.6.3.1.3.38 Process Condensate Lag Storage Vessel Inlet Valves

The process condensate lag storage vessel inlet valves, DEP-YV-8451/8461 (DEP-YC-8451/8461), can be controlled in either the manual or auto mode. When the valves are placed in the manual mode, the operator can open and close the valves to allow the transfer of evaporator condensate from DEP-PMP-00004A/B/C to DEP-VSL-00005A/B. When they are operated in the auto mode, the valves are controlled by DEP-HS-8323B. [Reference: 24590-BOF-J3-DEP-70606/70609]

4.1.6.3.1.3.39 Process Condensate Lag Storage Vessel Primary Recirculation Valves

The process condensate lag storage vessel primary recirculation valves, DEP-YV-8452/8462 (DEP-YC-8452/8462), can be controlled in either the manual or auto mode. When the valves are placed in the manual mode, the operator can open and close the valves to establish a recirculation loop back to DEP-VSL-00005A/B during DEP-PMP-00015A/B/C transfers. When they are operated in the auto mode, the valves are controlled by DEP-HS-8480A. [Reference: 24590-BOF-J3-DEP-70606/70609]

4.1.6.3.1.3.40 Process Condensate Lag Storage Vessel Minimum Recirculation Valves

The process condensate lag storage vessel minimum recirculation valves, DEP-YV-8453/8463 (DEP-YC-8453/8463), can be controlled in either the manual or auto mode. When the valves are placed in the manual mode, the operator can open and close the valves to establish a minimum recirculation loop back to DEP-VSL-00005A/B during DEP-PMP-00005A/B transfers. When they are operated in the auto mode, the valves are controlled by DEP-HS-8480A. [Reference: 24590-BOF-J3-DEP-70607/70611]

4.1.6.3.1.3.41 Process Condensate Lag Storage Vessel Steam Blowdown Valves

The process condensate lag storage vessel steam blowdown valves, DEP-YV-8454/8464 (DEP-YC-8454/8464), are controlled in the manual mode. The operator can open and close the valves to allow the transfer of HPS-HX-00011 blowdown from the SCW system to DEP-VSL-00005A/B. [Reference: 24590-BOF-J3-DEP-70607/70611]

4.1.6.3.1.3.42 Process Condensate Lag Storage Vessel Eductor Valves

The process condensate lag storage vessel eductor valves, DEP-YV-8456/8467 (DEP-YC-8456/8467), can be controlled in either the manual or auto mode. When the valves are placed in the manual mode, the operator can open and close the valves to mix the DEP-VSL-00005A/B contents through eductors. When they are operated in the auto mode, the valves are controlled by DEP-HS-8497. [Reference: 24590-BOF-J3-DEP-70608/70610]

4.1.6.3.1.3.43 Process Condensate Lag Storage Vessel Outlet Valves

The process condensate lag storage vessel outlet valves, DEP-YV-8460/8494 (DEP-YC-8460/8494), can be controlled in either the manual or auto mode. When the valves are placed in the manual mode, the operator can open and close the valves to empty DEP-VSL-00005A/B. When they are operated in the auto mode, the valves are controlled by DEP-HS-8480A. [Reference: 24590-BOF-J3-DEP-70612/70613]

4.1.6.3.1.3.44 Process Condensate Lag Storage Vessel Transfer Pumps

The process condensate lag storage vessel transfer pumps, DEP-PMP-00005A/B (DEP-YC-8472/8473) can be controlled in either the manual or auto mode. When the pumps are placed in the manual mode, the operator can start and stop the pumps as needed to transfer DEP-VSL-00005A/B condensate to LERF/ETF. When they are operated in the auto mode, the pumps are controlled by DEP-HS-8472. [Reference: 24590-BOF-J3-DEP-70605]

4.1.6.3.1.3.45 Process Condensate Lag Storage Vessel Transfer Pump Handswitch

The process condensate lag storage vessel transfer pump handswitch (DEP-HS-8472D) is operated manually to start and stop DEP-PMP-00005A/B. [Reference: 24590-BOF-J3-DEP-70003]

4.1.6.3.1.3.46 Process Condensate Lag Storage Vessels Supply Handswitch

The process condensate lag storage vessels supply handswitch (DEP-HS-8480A) is operated manually to select the process condensate lag storage vessel (DEP-VSL-00005A/B) to empty. The operator can choose which vessel to discharge from or can reset the handswitch. [Reference: 24590-BOF-J3-DEP-70602]

4.1.6.3.1.3.47 Process Condensate Lag Storage Vessels Transfer Handswitch

The process condensate lag storage vessels transfer handswitch (DEP-HS-8480B) is operated manually to either select the overhead sampling vessel (DEP-VSL-00004A/B) for off-specification condensate, the primary or secondary LERF transfer line, or reset the handswitch. [Reference: 24590-BOF-J3-DEP-70601]

4.1.6.3.1.3.48 Process Condensate Lag Storage Vessel Flow Totalizer

The process condensate lag storage vessel flow totalizer (DEP-FQI-8475) is manually reset using its associated handswitch after the batch transfer from DEP-VSL-00005A/B to LERF/ETF or DEP-VSL-00004A/B is complete. [Reference: 24590-BOF-J3-DEP-71607]

4.1.6.3.1.3.49 Process Condensate Lag Storage Vessel Minimum Recirculation Flow Control Valve

The process condensate lag storage vessel minimum recirculation flow control valve (DEP-FV-8475) is automatically controlled by DEP-FC-8475, based on input from DEP-FI-8475 and DEP-HS-8480B. [Reference: 24590-BOF-J3-DEP-71607]

4.1.6.3.1.3.50 Process Condensate Lag Storage Vessel LERF Flow Totalizer

The process condensate lag storage vessel LERF flow totalizer (DEP-FQI-8482) is manually reset using its associated handswitch after the batch transfer from DEP-VSL-00005A/B to LERF/ETF is complete. [Reference: 24590-BOF-J3-DEP-71608]

4.1.6.3.1.3.51 Process Condensate Lag Storage Vessel Transfer Flow Control Valve

The process condensate lag storage vessel transfer flow control valve (DEP-FV-8482) is automatically controlled by DEP-FC-8482, based on input from DEP-FI-8482 and DEP-HS-8480B. [Reference: 24590-BOF-J3-DEP-71608]

4.1.6.3.1.3.52 Process Condensate Lag Storage Vessel LERF Transfer Valve

The process condensate lag storage vessel LERF transfer valve, DEP-YV-8487 (DEP-YC-8487), can be controlled in either the manual or auto mode. When the valve is placed in the manual mode, the operator can open and close the valve to allow a transfer from DEP-VSL-00005A/B to LERF/ETF. When it is operated in the auto mode, the valve is controlled by DEP-HS-8480B. [Reference: 24590-BOF-J3-DEP-70616]

4.1.6.3.1.3.53 Process Condensate Lag Storage Vessel Vent Valve

The process condensate lag storage vessel vent valve, DEP-YV-8488 (DEP-YC-8488), can be controlled in either the manual or auto mode. When the valve is placed in the manual mode, the operator can open and close the valve to increase the pressure in the transfer line to LERF/ETF. When it is operated in the auto mode, the valve is controlled by DEP-PI-8499. [Reference: 24590-BOF-J3-DEP-70614]

4.1.6.3.1.3.54 Process Condensate Lag Storage Vessel Recirculation Pumps

The process condensate lag storage vessel recirculation pumps, DEP-PMP-00015A/B/C (DEP-YC-8489/8490/8491) can be controlled in either the manual or auto mode. When the pumps are placed in the manual mode, the operator can start and stop the pumps as needed to recirculate the contents of DEP-VSL-00005A/B or transfer process condensate to multiple locations for flushing. When they are operated in the auto mode, the pumps are controlled by DEP-HS-8489. [Reference: 24590-BOF-J3-DEP-70604]

4.1.6.3.1.3.55 Process Condensate Lag Storage Vessel Recirculation Pump Handswitch

The process condensate lag storage vessel recirculation pump handswitch (DEP-HS-8489D) is operated manually to start and stop DEP-PMP-00015A/B/C. [Reference: 24590-BOF-J3-DEP-70003]

4.1.6.3.1.3.56 Process Condensate Lag Storage Vessels Supply Handswitch

The process condensate lag storage vessels mixing handswitch (DEP-HS-8497) is operated manually to select the process condensate lag storage vessel (DEP-VSL-00005A/B) to mix. The operator can choose which vessel to mix or can reset the handswitch. [Reference: 24590-BOF-J3-DEP-70603]

4.1.6.3.1.3.57 Process Condensate Lag Storage Vessel Mixing Totalizer

The process condensate lag storage vessel mixing totalizer (DEP-FQI-8493) is manually reset using its associated handswitch after the eductor mixing setpoint of DEP-VSL-00005A/B is reached. [Reference: 24590-BOF-J3-DEP-71605]

4.1.6.3.1.3.58 Process Condensate Lag Storage Vessel Eductor Flow Control Valve

The process condensate lag storage vessel eductor flow control valve (DEP-FV-8493A) is automatically controlled by DEP-FC-8493A, based on input from DEP-FI-8493, DEP-HS-8497, and eductor flow setpoints. [Reference: 24590-BOF-J3-DEP-71605]

4.1.6.3.1.3.59 Process Condensate Lag Storage Vessel Recirculation Flow Control Valve

The process condensate lag storage vessel recirculation flow control valve (DEP-FV-8493B) is automatically controlled by DEP-FC-8493B, based on input from DEP-FI-8493 and whether a flow path is available. [Reference: 24590-BOF-J3-DEP-71605]

4.1.6.3.1.3.60 Process Condensate Lag Storage Vessel Flush Totalizer

The process condensate lag storage vessel flush totalizer (DEP-FQI-8496) is manually reset using its associated handswitch after the batch transfer setpoint of process condensate is reached. [Reference: 24590-BOF-J3-DEP-71604]

4.1.6.3.1.3.61 Process Condensate Lag Storage Vessel Flush Flow Control Valve

The process condensate lag storage vessel flush flow control valve (DEP-FV-8496) is automatically controlled by DEP-FC-8496, based on input from DEP-FI-8496, DEP-HS-8431A, and DEP-HS-8199. [Reference: 24590-BOF-J3-DEP-71604]

4.1.6.3.1.4 Other DEP System Automatic and Manual Actions

4.1.6.3.1.4.1 West Process Area Sump Pumps

The west process area sump pumps, DEP-PMP-00032A/B (DEP-YC-8627/8630), are controlled in the manual mode. The operator can start and stop the pumps as needed to transfer DEP-SUMP-00002A/B content to DEP-VSL-00001 or DEP-VSL-00004A/B. [Reference: 24590-BOF-J3-DEP-70901]

4.1.6.3.1.4.2 West Process Area Sump Valves

The west process area sump valves, DEP-YV-8628/8631 (DEP-YC-8628/8631), are controlled in the manual mode. The operator can open and close the valves as needed to transfer DEP-SUMP-00002A/B content to DEP-VSL-00001 or DEP-VSL-00004A/B. [Reference: 24590-BOF-J3-DEP-70902]

4.1.6.3.1.4.3 Feed Vessel Area Sump Pumps

The feed vessel area sump pumps, DEP-PMP-00034A/B (DEP-YC-8634/8657), are controlled in the manual mode. The operator can start and stop the pumps as needed to transfer DEP-SUMP-00004A/B content to DEP-VSL-00001 or DEP-VSL-00004A/B. [Reference: 24590-BOF-J3-DEP-70903]

4.1.6.3.1.4.4 Truck Bay Sump Pump

The truck bay sump pump, DEP-PMP-00038 (DEP-YC-8649), is controlled in the manual mode. The operator can start and stop the pump as needed to transfer DEP-SUMP-00008 content to DEP-VSL-00001. [Reference: 24590-BOF-J3-DEP-70906]

4.1.6.3.1.4.5 East Process Area Sump Pumps

The east process area sump pumps, DEP-PMP-00033A/B (DEP-YC-8651/8653), are controlled in the manual mode. The operator can start and stop the pumps as needed to transfer DEP-SUMP-00003A/B content to DEP-VSL-00005A/B. [Reference: 24590-BOF-J3-DEP-70908]

4.1.6.3.1.4.6 Process Condensate Vessel Area Sump Pumps

The feed vessel area sump pumps, DEP-PMP-00035A/B (DEP-YC-8639/8642), are controlled in the manual mode. The operator can start and stop the pumps as needed to transfer DEP-SUMP-00005A/B content to DEP-VSL-00005A/B. [Reference: 24590-BOF-J3-DEP-70910]

4.1.6.3.2 DVP System Automatic and Manual Actions

4.1.6.3.2.1 Process Ventilation Preheaters

The process ventilation preheaters, DVP-HTR-00001A/B (DVP-YC-8106/8112), can be controlled in either the manual or auto mode. When the units are placed in the manual mode, the operator can start and stop the preheaters as needed to protect the DVP system HEPA filters from degradation due to moisture. When they are placed in the auto mode, the preheaters are started and stopped based on whether their associated exhauster is running. The heating coil output is regulated based on internal temperature elements and controllers. [Reference: 24590-BOF-J3-DVP-70002/70003]

4.1.6.3.2.2 Process Ventilation Exhausters*

The process ventilation exhausters, DVP-EXHR-00001A/B (DVP-YC-8105A/B), can be controlled in either the manual or auto mode. When the units are placed in the manual mode, the operator can start and stop the exhausters to purge hydrogen from the DEP system process vessels. To start the units, the operator selects one unit as duty and one as standby using DVP-HS-8105. The operator then manually starts the duty unit and places both units in the auto mode using DEP-YC-8105A/B. Upon failure of the duty exhauster, the standby unit automatically starts upon receipt of the start command from DVP-HS-8105. When the exhausters are placed in the auto mode, the units are controlled by DVP-PDC-8105A/B and DVP-FC-8111/8117. [Reference: 24590-BOF-J3-DVP-70001/70002/70003]

4.1.6.3.2.3 Exhauster Outlet Valves

The exhauster outlet valves, DVP-YV-8120/8122 (DVP-YC-8120/8122), can be controlled in either the manual or auto mode. When the units are placed in the manual mode, the operator can open and close the valves as needed to create an exhaust flow path to the EMF stack. When they are placed in the auto mode, the valves are opened and closed based on whether their associated exhauster is running. If neither of the exhausters are running, then both of the outlet valves are automatically opened. [Reference: 24590-BOF-J3-DVP-70002/70003]

4.1.6.3.3 ACV System Automatic and Manual Actions

This section will be updated at a later revision when the C&I logic diagrams are issued for the ACV system.

4.1.6.4 Setpoints and Ranges

4.1.6.4.1 DEP System Setpoints and Ranges

The setpoints and ranges associated with the ICN indications that have an engineering basis for the DEP system are provided in (TBD), *Configuration Data Index for the DEP System*.

The setpoints and ranges associated with the ICN indications that are configurable by the operator for the DEP system are provided in (TBD), *DEP System Tunable Report*.

4.1.6.4.2 DVP System Setpoints and Ranges

The setpoints and ranges associated with the ICN indications that have an engineering basis for the DVP system are provided in (TBD), *Configuration Data Index for the DVP System*.

The setpoints and ranges associated with the ICN indications that are configurable by the operator for the DVP system are provided in (TBD), *DVP System Tunable Report*.

4.1.6.4.3 ACV System Setpoints and Ranges

The setpoints and ranges associated with the ICN indications that have an engineering basis for the ACV system are provided in (TBD), *Configuration Data Index for the ACV System*.

The setpoints and ranges associated with the ICN indications that are configurable by the operator for the ACV system are provided in (TBD), *ACV System Tunable Report*.

4.1.6.5 Interlocks, Bypasses, and Permissives

The following sections describe the important system interlocks, bypasses, and permissives that are used for operation and performance monitoring. Refer to the detailed design documentation for additional detail.

Note: Sections marked with [*] are instances where the C&I control logic diagrams are not in alignment with the issued P&IDs. These sections are completed in accordance with the most recent revision to the P&IDs and will be confirmed once the logic diagrams are re-issued.

4.1.6.5.1 DEP System Interlocks, Bypasses, and Permissives

4.1.6.5.1.1 Evaporator Feed Subsystem Interlocks, Bypasses, and Permissives

4.1.6.5.1.1.1 Low Point Drain Vessel High Level Interlock*

This interlock protects DEP-VSL-00001 from overfilling by preventing the transfer of drains from various sources within the EMF to DEP-VSL-00001. The following actions occur when a high level is detected by DEP-LI-8109:

- The Lab RLD drain valve, DEP-YV-8101 (DEP-YC-8101), closes
- The LAW LVP drain valve, DEP-YV-8102 (DEP-YC-8102), closes
- The LAW RLD drain valve, DEP-YV-8103 (DEP-YC-8103), closes
- The effluent cooler drain valve, DEP-YV-8409 (DEP-YC-8409), closes
- The TOC drain valve, DEP-YV-8682 (DEP-YC-8682), closes
- The DEP-SUMP-00002A/B pumps, DEP-PMP-00032A/B (DEP-YC-8627/8630), stop
- The DEP-SUMP-00004A/B pumps, DEP-PMP-00034A/B (DEP-YC-8634/8657), stop
- The DEP-SUMP-00008 pump, DEP-PMP-00038 (DEP-YC-8649), stops

[Reference: 24590-BOF-J3-DEP-70001/70101/70213/70901/70903/70906/71101]

4.1.6.5.1.1.2 Low Point Drain Vessel Low Level Interlock

This interlock protects the low point drain vessel pumps from dry-running and overheating by stopping DEP-PMP-00001A/B (DEP-YC-8105/8107) when a low level is detected by DEP-LI-8109. Additionally, this interlock protects the DEP-VSL-00001 agitator from blade and shaft damage by stopping the vessel agitator, DEP-AGT-00001 (DEP-YC-8104), when a low level is detected by DEP-LI-8109. [Reference: 24590-BOF-J3-DEP-70102/70106/71101]

4.1.6.5.1.1.3 Loop Seal Valve Interlock*

This interlock protects the DEP-VSL-00001 overflow line loop seal from overfilling by closing DEP-YV-8117 (DEP-YC-8117) when the high level setpoint of DEP-LSH-8113A is reached. [Reference: TBD]

4.1.6.5.1.1.4 Low Point Drain Vessel Pump Flow Path Interlock*

This interlock protects the low point drain vessel pumps from overheating by stopping DEP-PMP-00001A/B (DEP-YC-8105/8107) when a flow path does not exist and the pumps have been placed in the manual mode. DEP-YV-8106 must be open or the following condition must be met:

- DEP-YV-8108, DEP-YV-8152, and DEP-YV-8186 are open
- DEP-YV-8119, DEP-YV-8184, DEP-YV-8188, DEP-YV-8189, DEP-YV-8190, DEP-YV-8397, and DEP-YV-8911 are closed

[Reference: 24590-BOF-J3-DEP-70003/70102/70215/70216]

4.1.6.5.1.1.5 Low Point Drain Vessel Pump Discharge Pressure Interlock*

This interlock prevents cavitation and mechanical failure by stopping DEP-PMP-00001A/B (DEP-YC-8105/8107) when either an abnormally high or low pressure is detected by DEP-PI-8110. [Reference: TBD]

4.1.6.5.1.1.6 Evaporator Feed Vessel High Level Interlock*

This interlock protects DEP-VSL-00002 from overfilling by preventing transfers from various sources within the EMF to DEP-VSL-00002. The following actions occur when a high level is detected by DEP-LI-8156:

- The evaporator feed vessel sodium hydroxide valve, DEP-YV-8151 (DEP-YC-8151), closes
- The evaporator feed vessel inlet valve, DEP-YV-8152 (DEP-YC-8152), closes
- The evaporator feed vessel recycled condensate valve, DEP-YV-8153 (DEP-YC-8153), closes
- The off-specification evaporator concentrate flow control valve (DEP-FV-8227B) closes
- The contaminated reboiler condensate valve, DEP-YV-8276 (DEP-YC-8276), closes

[Reference: 24590-BOF-J3-DEP-70201/70202/70313/71201/71308]

4.1.6.5.1.1.7 Evaporator Feed Vessel Low Level Interlock

This interlock maintains an adequate heel in DEP-VSL-00002 by stopping DEP-PMP-00002A/B (DEP-YC-8176/8179) and DEP-PMP-00012A/B/C (DEP-YC-8160/8163/8166) when a low level is detected by DEP-LI-8156. [Reference: 24590-BOF-J3-DEP-70204/70205/71201]

4.1.6.5.1.1.8 Evaporator Feed Vessel Transfer Pump Not Running Interlock

This interlock prevents transfers from DEP-VSL-00002 to DEP-EVAP-00001 by closing DEP-YV-8154 (DEP-YC-8154) when both DEP-PMP-00002A and DEP-PMP-00002B are not running. [Reference: 24590-BOF-J3-DEP-70203/70220]

4.1.6.5.1.1.9 Evaporator Feed Vessel Transfer Pump Start Permissive

This permissive prevents both DEP-PMP-00002A and DEP-PMP-00002B (DEP-YC-8176/8179) from starting unless their common suction valve (DEP-YV-8154) is open, as indicated by DEP-ZI-8154. [Reference: 24590-BOF-J3-DEP-70205]

4.1.6.5.1.1.10 Evaporator Feed Vessel Transfer Pump Discharge Flow Interlock

This interlock provides pump protection by stopping DEP-PMP-00002A/B (DEP-YC-8176/8179) when an abnormally low flow is detected by DEP-FI-8182 while either pump is running. [Reference: 24590-BOF-J3-DEP-70205/70220/71206]

4.1.6.5.1.1.11 Evaporator Feed Vessel Transfer Pump Suction Valve Interlock

This interlock provides protection from cavitation by stopping DEP-PMP-00002A/B (DEP-YC-8176/8179) when the suction valve (DEP-YV-8154) closes, as indicated by DEP-ZI-8154, and the pump is in operation. [Reference: 24590-BOF-J3-DEP-70205/70220]

4.1.6.5.1.1.12 Evaporator Feed Vessel Transfer Pump Discharge Pressure Interlock

This interlock prevents cavitation and mechanical failure by stopping DEP-PMP-00002A/B (DEP-YC-8176/8179) when an abnormally high pressure is detected by DEP-PI-8181. The pumps are also stopped when an abnormally low pressure is detected by DEP-PI-8181 and the units are in operation. [Reference: 24590-BOF-J3-DEP-70205/70220/71206]

4.1.6.5.1.1.13 Evaporator Feed Vessel Recirculation Pump Not Running Interlock

This interlock prevents transfers from DEP-VSL-00002 to Tank Farms by closing DEP-YV-8155 (DEP-YC-8155) when each of DEP-PMP-00012A, DEP-PMP-00012B, and DEP-PMP-00012C are not running. [Reference: 24590-BOF-J3-DEP-70203/70221]

4.1.6.5.1.1.14 Evaporator Feed Vessel Recirculation Pump Flow Path Interlock*

This interlock protects the evaporator feed vessel recirculation pumps from overheating by stopping DEP-PMP-00012A/B/C (DEP-YC-8160/8163/8166) when a flow path does not exist and any pump has been placed in the manual mode. The pumps stop if the following conditions are not met:

- DEP-YV-8155 is open
- Either DEP-HS-8902 is set to mix and DEP-YV-8912 is closed, or
- DEP-YV-8405, DEP-YV-8912, and DEP-YV-8915 are open; DEP-YV-8409, DEP-YV-8911, DEP-YV-8913, and DEP-YV-8914 are closed; and DEP-PMP-00012A/B/C and SNR-PMP-00022 are running

[Reference: 24590-BOF-J3-DEP-70003/70204/70218]

4.1.6.5.1.1.15 Evaporator Feed Vessel Recirculation Pump Setpoint Interlock

This interlock stops DEP-PMP-00012A/B/C (DEP-YC-8160/8163/8166) when the Tank Farms transfer volume setpoint of DEP-FQSH-8908 is reached. [Reference: 24590-BOF-J3-DEP-70003/70204/71205]

4.1.6.5.1.1.16 Evaporator Feed Vessel Recirculation Pump Discharge Pressure Interlock

This interlock prevents cavitation and mechanical failure by stopping DEP-PMP-00012A/B/C (DEP-YC-8160/8163/8166) when an abnormally high pressure is detected by DEP-PI-8168. The pumps are also stopped when an abnormally low pressure is detected by DEP-PI-8168 and any of the units are in operation. [Reference: 24590-BOF-J3-DEP-70204/70221/71202]

4.1.6.5.1.1.17 Filtered Concentrate Mixing Valve Open Permissive*

This permissive prevents DEP-YV-8911 (DEP-YC-8911) from opening unless the demineralized water mixing valve, DEP-YV-8913 (DEP-YC-8913), is closed. [Reference: 24590-BOF-J3-DEP-70210]

4.1.6.5.1.1.18 Evaporator Feed Mixing Valve Open Permissive*

This permissive prevents DEP-YV-8912 (DEP-YC-8912) from opening unless the demineralized water mixing valve, DEP-YV-8913 (DEP-YC-8913), is closed. [Reference: 24590-BOF-J3-DEP-70210]

4.1.6.5.1.1.19 Demineralized Water Mixing Valve Open Permissive

This permissive prevents DEP-YV-8913 (DEP-YC-8913) from opening unless the filtered concentrate mixing valve (DEP-YV-8911), the evaporator feed mixing valve (DEP-YV-8912), the process condensate mixing valve (DEP-YV-8914), and sodium nitrite mixing valve (DEP-YV-8915) are all closed. [Reference: 24590-BOF-J3-DEP-70211]

4.1.6.5.1.1.20 Process Condensate Mixing Valve Open Permissive

This permissive prevents DEP-YV-8914 (DEP-YC-8914) from opening unless the demineralized water mixing valve, DEP-YV-8913 (DEP-YC-8913), is closed. [Reference: 24590-BOF-J3-DEP-70211]

4.1.6.5.1.1.21 Sodium Nitrite Mixing Valve Open Permissive

This permissive prevents DEP-YV-8915 (DEP-YC-8915) from opening unless the demineralized water mixing valve, DEP-YV-8913 (DEP-YC-8913), is closed. [Reference: 24590-BOF-J3-DEP-70212]

4.1.6.5.1.1.22 Effluent Cooler pH Interlock

This interlock prevents transfers of off-specification effluent to Tank Farms by closing DEP-YV-8405 (DEP-YC-8405) when a low pH is detected by DEP-AI-8403. [Reference: 24590-BOF-J3-DEP-70213/71210]

4.1.6.5.1.1.23 Effluent Cooler Temperature Interlock

This interlock prevents transfers of off-specification effluent to Tank Farms by closing DEP-YV-8405 (DEP-YC-8405) when a high temperature is detected by DEP-TI-8402. [Reference: 24590-BOF-J3-DEP-70213/71210]

4.1.6.5.1.1.24 Effluent Cooler Differential Pressure Interlock

This interlock detects leaks in the process and utility fluids in DEP-HX-00001 and prevents operation of the Tank Farms transfer system through the following actions when a low differential pressure is detected by DEP-PDI-8401:

- DEP-PMP-00012A/B/C (DEP-YC-8160/8163/8166) are stopped if DEP-HS-8902 is set to Tank Farms
- DEP-PMP-00015A/B/C (DEP-YC-8489/8490/8491) are stopped
- SNR-PMP-00022 (SNR-YC-8204) is stopped
- DEP-PMP-00003A/B (DEP-YC-8386/8391) are stopped if DEP-HS-8431B is set to Tank Farms
- DEP-YV-8405, DEP-YV-8412, DEP-YV-8911, DEP-YV-8912, DEP-YV-8913, DEP-YV-8914, and DEP-YV-8915 close
- PCW-PMP-00030A/B (PCW-YC-8517/8519) are stopped
- DEP-HS-8431B and DEP-HS-8902 are reset

[Reference: 24590-BOF-J3-DEP-70204/70210/70211/70212/70213/70218/70509/70515/70604/71219, 24590-BOF-J3-SNR-70002, 24590-BOF-J3-PCW-70001]

4.1.6.5.1.1.25 Effluent Cooler Conductivity Interlock*

This interlock detects breakthrough in the cooling water discharged from DEP-HX-00001 and prevents operation of the Tank Farms transfer system through the following actions when a high conductivity is detected by DEP-CI-8417:

- DEP-PMP-00012A/B/C (DEP-YC-8160/8163/8166) are stopped if DEP-HS-8902 is set to Tank Farms
- DEP-PMP-00015A/B/C (DEP-YC-8489/8490/8491) are stopped if DEP-HS-8431B is set to Tank Farms
- SNR-PMP-00022 (SNR-YC-8204) is stopped
- DEP-PMP-00003A/B (DEP-YC-8386/8391) are stopped if DEP-HS-8431B is set to Tank Farms
- DEP-YV-8405, DEP-YV-8412, DEP-YV-8911, DEP-YV-8912, DEP-YV-8913, DEP-YV-8914, and DEP-YV-8915 close
- PCW-PMP-00030A/B (PCW-YC-8517/8519) are stopped
- DEP-HS-8431B and DEP-HS-8902 are reset

[Reference: 24590-BOF-J3-DEP-70204/70210/70211/70212/70213/70218/70509/70515/70604/71219, 24590-BOF-J3-SNR-70002, 24590-BOF-J3-PCW-70001]

4.1.6.5.1.2 Evaporator Process Subsystem Interlocks, Bypasses, and Permissives

4.1.6.5.1.2.1 Evaporator High Level Interlock

This interlock prevents the liquid level in DEP-EVAP-00001 from exceeding the operating band by stopping AFR-PMP-00014A/B (AFR-YC-8102A/B), stopping DEP-PMP-00002A/B (DEP-YC-8176/8179), and closing DEP-YV-8205 (DEP-YC-8205) when a high level is detected by either DEP-LI-8210 or DEP-LI-8211. [Reference: 24590-BOF-J3-DEP-70205/70302/71304, 24590-BOF-J3-AFR-70002]

4.1.6.5.1.2.2 Evaporator Low Level Interlock

This interlock maintains a minimum liquid level in DEP-EVAP-00001 by stopping DEP-PMP-00007A/B (DEP-YC-8222/8225) and stopping DEP-PMP-00017 (DEP-YC-8213) when a low level is detected by either DEP-LI-8210 or DEP-LI-8211. The interlock also stops DEP-PMP-00002A/B (DEP-YC-8176/8179) in a delayed fashion based on different low level setpoints. However, if the level continues to decrease, the pumps are immediately shut down. [Reference: 24590-BOF-J3-DEP-70205/70303/70306/71304]

4.1.6.5.1.2.3 AFR Setpoint Interlock

This interlock prevents the excess transfer of anti-foam reagent from the AFR system to DEP-EVAP-00001 by closing DEP-YV-8205 (DEP-YC-8205) when the demineralized water transfer volume setpoint of AFR-FQSH-8102B is reached. [Reference: 24590-BOF-J3-DEP-70302, 24590-BOF-J3-AFR-71001]

4.1.6.5.1.2.4 AFR Pressure Interlock*

This interlock prevents evaporator fluid from back-flowing into AFR-PMP-00014A/B by closing DEP-YV-8205 (DEP-YC-8205) when abnormal discharge pressures are detected by AFR-PI-8207. [Reference: 24590-BOF-J3-DEP-70302]

4.1.6.5.1.2.5 Reboiler Condensate Conductivity Interlock*

This interlock detects breakthrough in the steam condensate collected from DEP-RBLR-00001 and prevents operation of the evaporator system through the following actions when a high conductivity is detected by DEP-CI-8218:

- DEP-LV-8216 is opened
- DEP-PMP-00017 (DEP-YC-8213) is stopped
- HPS-PV-8902 is closed
- DEP-PMP-00002A/B (DEP-YC-8176/8179) are stopped
- DEP-YV-8276 (DEP-YC-8276) and DEP-FV-8227B are opened
- DEP-YV-8275 (DEP-YC-8275), DEP-YV-8219 (DEP-YC-8219), and DEP-FV-8227A are closed

[Reference: 24590-BOF-J3-DEP-70205/70303/70313/71306/71308, 24590-BOF-J3-HPS-71001]

4.1.6.5.1.2.6 Evaporator Concentrate Discharge Pumps Pressure Interlock

This interlock prevents evaporator concentrate from back-flowing into DEP-EVAP-00001 by stopping DEP-PMP-00007A/B (DEP-YC-8222/8225) when insufficient discharge pressure is detected by DEP-PI-8231 and either of the pumps is running. [Reference: 24590-BOF-J3-DEP-70306/71307]

4.1.6.5.1.2.7 Evaporator Concentrate Discharge Pumps Start Permissive

This interlock prevents DEP-PMP-00007A/B (DEP-YC-8222/8225) from starting if both DEP-LV-8227A and DEP-LV-8227B are closed, as indicated by DEP-ZI-8227A and DEP-ZI-8227B, respectively. [Reference: 24590-BOF-J3-DEP-70306/71308]

4.1.6.5.1.2.8 Evaporator Concentrate Discharge Pumps Flow Path Interlock

This interlock protects the evaporator concentrate discharge pumps from overheating by stopping DEP-PMP-00007A/B (DEP-YC-8222/8225) when a flow path does not exist, as indicated by DEP-ZI-8227A and DEP-ZI-8227B, and either pump is running. [Reference: 24590-BOF-J3-DEP-70306/71308]

4.1.6.5.1.2.9 Evaporator Concentrate Discharge Pumps Flow Interlock

This interlock indicates mechanical failure and prevents further system operation by stopping DEP-PMP-00007A/B (DEP-YC-8222/8225) when insufficient flow is detected by DEP-FI-8227 and either of the pumps is running. [Reference: 24590-BOF-J3-DEP-70306/71308]

4.1.6.5.1.2.10 Evaporator Concentrate High Density Interlock*

This interlock prevents the transfer of off-specification evaporator concentrate by closing DEP-YV-8353, DEP-YV-8364, DEP-YV-8375, DEP-FV-8227A, and DEP-DV-8228 and opening DEP-FV-8227B when a high density is detected by DEP-DI-8228. [Reference: 24590-BOF-J3-DEP-70503/70505/70507/71308]

4.1.6.5.1.2.11 Evaporator Concentrate Low Density Interlock

This interlock prevents the transfer of off-specification evaporator concentrate by closing DEP-YV-8353, DEP-YV-8364, DEP-YV-8375, and DEP-DV-8228 when a low density is detected by DEP-DI-8228. [Reference: 24590-BOF-J3-DEP-70503/70505/70507/71308]

4.1.6.5.1.2.12 Evaporator Concentrate Radiation Interlock

This interlock prevents the transfer of off-specification evaporator concentrate by closing DEP-YV-8353, DEP-YV-8364, DEP-YV-8375, DEP-FV-8227A, and DEP-DV-8228 and opening DEP-FV-8227B when high radiation is detected by DEP-RI-8229. [Reference: 24590-BOF-J3-DEP-70503/70505/70507/71307/71308]

4.1.6.5.1.2.13 Steam Supply Pressure Interlock*

This interlock prevents evaporator overhead vapor from back flowing into and contaminating the HPS system by closing DEP-YV-8234 (DEP-YC-8234) when a low pressure is detected by DEP-PI-8235. This interlock also closes DEP-YV-8217 (DEP-YC-8217) because cooling water is not required when the condenser system is not in operation. [Reference: 24590-BOF-J3-DEP-70309/71309]

4.1.6.5.1.2.14 Evaporator Primary Condenser Level Interlock

This interlock maintains the liquid level in the boot of DEP-COND-00001 within the operating band by stopping DEP-PMP-00006A/B (DEP-YC-8258/8259) when a low level is detected by DEP-LI-8251. [Reference: 24590-BOF-J3-DEP-70311/71311]

4.1.6.5.1.2.15 Evaporator Condensate Pump Start Permissive

This interlock prevents DEP-PMP-00006A/B (DEP-YC-8258/8259) from starting unless DEP-FV-8251B is open, as indicated by DEP-ZI-8251B, or either of DEP-YV-8301/8308 is open while DEP-FV-8251A is open, as indicated by DEP-ZI-8251A. [Reference: 24590-BOF-J3-DEP-70311/71311]

4.1.6.5.1.2.16 Evaporator Condensate Pump Flow Path Interlock

This interlock protects the evaporator condensate pumps from overheating by stopping DEP-PMP-00007A/B (DEP-YC-8222/8225) when both of the following flow paths do not exist and either pump is running:

- DEP-FV-8251B is open
- DEP-FV-8251A is open and either DEP-YV-8301 or DEP-YV-8308 is open

[Reference: 24590-BOF-J3-DEP-70311/71311]

4.1.6.5.1.2.17 Evaporator Condensate Pump Pressure Interlock

This interlock prevents evaporator condensate from back-flowing into DEP-COND-00001 by stopping DEP-PMP-00006A/B (DEP-YC-8258/8259) when insufficient discharge pressure is detected by DEP-PI-8260 and either of the pumps is running. [Reference: 24590-BOF-J3-DEP-70311/71314]

4.1.6.5.1.2.18 Evaporator Condensate Conductivity Interlock

This interlock detects breakthrough in the evaporator condensate and prevents a transfer of the solution to DEP-VSL-00004A/B by closing DEP-YV-8301, DEP-YV-8308, and DEP-LV-8251A and opening DEP-LV-8251B when high conductivity is detected by DEP-CI-8257. [Reference: 24590-BOF-J3-DEP-70405/70408/71311/71314]

4.1.6.5.1.2.19 Reboiler Condensate Collection Vessel High Level Interlock*

This interlock protects DEP-VSL-00008 from overfilling by starting DEP-PMP-00008A/B (DEP-YC-8269) and closing DEP-YV-8219 (DEP-YC-8219) if a high level is detected by DEP-LI-8274 and the equipment is placed in the manual mode. [Reference: 24590-BOF-J3-DEP-70313/70314/71315]

4.1.6.5.1.2.20 Reboiler Condensate Collection Vessel Low Level Interlock*

This interlock maintains an adequate heel in DEP-VSL-00008 by stopping DEP-PMP-00008A/B (DEP-YC-8269) if a low level is detected by DEP-LI-8274 and the units are in operation. [Reference: 24590-BOF-J3-DEP-70314/71315]

4.1.6.5.1.2.21 Reboiler Condensate Pump Permissive

This interlock prevents DEP-PMP-00008A/B (DEP-YC-8269) from starting unless either DEP-YV-8275 or DEP-YV-8276 is open, establishing a discharge flow path for the pumps. [Reference: 24590-BOF-J3-DEP-70314]

4.1.6.5.1.3 Evaporator Discharge System Interlocks, Bypasses, and Permissives

4.1.6.5.1.3.1 Evaporator Concentrate Vessel High Level Interlock

This interlock protects DEP-VSL-00003A/B/C from overfilling by preventing transfers from various sources within the EMF to DEP-VSL-00003A/B/C. The following actions occur when a high level is detected by DEP-LI-8357/8368/8379:

- The evaporator concentrate vessel backflush inlet valves, DEP-YV-8196/8197/8198 close
- The evaporator concentrate vessel inlet valves, DEP-YV-8353/8364/8375 close
- The evaporator concentrate vessel sodium hydroxide valves, DEP-YV-8354/8367/8378 close

[Reference: 24590-BOF-J3-DEP-70208/70209/70503/70505/70507/71501/71502/71503]

4.1.6.5.1.3.2 Evaporator Concentrate Vessel Low Level Interlock

This interlock protects the evaporator concentrate transfer/recirculation pumps from dry-running and overheating by stopping DEP-PMP-00003A/B (DEP-YC-8386/8391) when a low level is detected by DEP-LI-8357, DEP-LI-8368, or DEP-LI-8379 and the associated vessel outlet valve (DEP-YV-8360, DEP-YV-8371, or DEP-YV-8382) is open, indicating that the associated vessel is emptying. [Reference: 24590-BOF-J3-DEP-70509/71501/71502/71503]

4.1.6.5.1.3.3 Evaporator Concentrate Vessel Temperature Interlock

This interlock prevents the transfer of concentrate from DEP-VSL-00003A/B/C to the LAW Facility that exceeds the design basis temperature of the LCP system by closing DEP-YV-8396 (DEP-YC-8396) when a high temperature is detected by DEP-TI-8358, DEP-TI-8369, or DEP-TI-8380 and the associated vessel outlet valve (DEP-YV-8360, DEP-YV-8371, or DEP-YV-8382) is open, indicating that the associated vessel is emptying. [Reference: 24590-BOF-J3-DEP-70510/71501/71502/71503]

4.1.6.5.1.3.4 Evaporator Concentrate Vessel Outlet Valve Permissive

This interlock precludes simultaneous transfers from multiple evaporator concentrate vessels by preventing the vessel outlet valves from opening unless the two other vessel outlet valves are both closed. DEP-YV-8360 cannot open unless DEP-YV-8371 and DEP-YV-8382 are both closed, DEP-YV-8371 cannot open unless DEP-YV-8360 and DEP-YV-8382 are both closed, and DEP-YV-8382 cannot open unless DEP-YV-8360 and DEP-YV-8371 are both closed. [Reference: 24590-BOF-J3-DEP-70504/70506/70508]

4.1.6.5.1.3.5 Evaporator Concentrate Transfer/Recirculation Pump Discharge Pressure Interlock

This interlock prevents cavitation and mechanical failure by stopping DEP-PMP-00003A/B (DEP-YC-8386/8391) when an abnormally high pressure is detected by DEP-PI-8394. The pumps are also stopped when an abnormally low pressure is detected by DEP-PI-8394 and the units are in operation. [Reference: 24590-BOF-J3-DEP-70509/71504]

4.1.6.5.1.3.6 Evaporator Feed Vessel Transfer Pump Discharge Flow Interlock

This interlock provides pump protection by stopping DEP-PMP-00003A/B (DEP-YC-8386/8391) when an abnormally low flow is detected by DEP-FI-8419 and the units are in operation. [Reference: 24590-BOF-J3-DEP-70509/71504]

4.1.6.5.1.3.7 Evaporator Concentrate to LAW Transfer Volume Interlock

This interlock prevents excess evaporator concentrate transfers from DEP-VSL-00003A/B/C to the LAW Facility by stopping DEP-PMP-00003A/B (DEP-YC-8386/8391) when the high transfer volume setpoint of DEP-FQSH-8395 is reached and the pumps are in the manual mode. [Reference: 24590-BOF-J3-DEP-70003/70509/71507]

4.1.6.5.1.3.8 Evaporator Concentrate to Evaporator Feed Vessel Transfer Volume Interlock

This interlock prevents excess evaporator concentrate transfers from DEP-VSL-00003A/B/C to DEP-VSL-00002 by stopping DEP-PMP-00003A/B (DEP-YC-8386/8391) when the high transfer volume setpoint of DEP-FQSH-8909 is reached and the pumps are in the manual mode. [Reference: 24590-BOF-J3-DEP-70003/70509/71508]

4.1.6.5.1.3.9 Evaporator Concentrate Transfer/Recirculation Pump Valve Alignment Interlock

This interlock prevents inadvertent transfers of evaporator concentrate by stopping DEP-PMP-00003A/B (DEP-YC-8386/8391) when the vessel outlet and flush valves are not aligned with the configuration selected at DEP-HS-8431A or the downstream transfer valves are not in alignment for LAW Facility transfers, vessel mixing, or Tank Farms transfers. [Reference: 24590-BOF-J3-DEP-70003/70502/70509/70516]

4.1.6.5.1.3.10 Tank Farms Transfer Pumps Not Running Interlock

This interlock prevents the transfer of un-conditioned evaporator concentrate from DEP-VSL-00003A/B/C to Tank Farms by stopping DEP-PMP-00003A/B (DEP-YC-8386-8391) if DEP-PMP-00003A/B, DEP-PMP-00015A/B/C, and SNR-PMP-00022 are not running at the same time and DEP-HS-8431B is aligned for a Tank Farms transfer. [Reference: 24590-BOF-J3-DEP-70003/70509]

4.1.6.5.1.3.11 Concentrate to LAW Temperature Interlock

This interlock prevents the transfer of concentrate from DEP-VSL-00003A/B/C and feed from the TOC to the LAW Facility that exceeds the design basis temperature of the LCP system by closing DEP-YV-8396 (DEP-YC-8396), DEP-YV-8679 (DEP-YC-8679), and DEP-YV-8683 (DEP-YV-8683) when a high temperature is detected by DEP-TI-8685. DEP-YV-8682 (DEP-YC-8682) is opened once the valves are closed to drain the off-specification feed to DEP-VSL-00001. [Reference: 24590-BOF-J3-DEP-70001/70510/71001]

4.1.6.5.1.3.12 Concentrate to LAW Pressure Interlock

This interlock protects the underground transfer piping feeding the LAW Facility by closing DEP-YV-8679 (DEP-YC-8679) and DEP-YV-8683 (DEP-YV-8683) when a high pressure is detected by DEP-PI-8678 and neither DEP-HS-8431B nor SHR-HS-8310 is set for a LAW Facility transfer. DEP-YV-8682 (DEP-YC-8682) is opened once the valves are closed to drain any feed in the transfer line to DEP-VSL-00001. [Reference: 24590-BOF-J3-DEP-70001/70002/71001]

4.1.6.5.1.3.13 Concentrate to LAW Radiation Interlock

This interlock diverts feed from the TOC to DEP-VSL-00001 when excessive radiation is detected in the TOC feed by opening DEP-YV-8679 (DEP-YC-8679) and closing DEP-YV-8683 (DEP-YV-8683) when high radiation is detected by DEP-RI-8676 and neither DEP-HS-8431B nor SHR-HS-8310 is set for a LAW Facility transfer. DEP-YV-8682 (DEP-YC-8682) is opened once the valves are re-positioned to drain the off-specification feed to DEP-VSL-00001. [Reference: 24590-BOF-J3-DEP-70001/70002/71001]

4.1.6.5.1.3.14 Concentrate to LAW Density Interlock

This interlock diverts feed from the TOC to DEP-VSL-00001 when excessive density is detected in the TOC feed by opening DEP-YV-8679 (DEP-YC-8679) and closing DEP-YV-8683 (DEP-YV-8683) when a high density is detected by DEP-DI-8677 and neither DEP-HS-8431B nor SHR-HS-8310 is set for a LAW Facility transfer. DEP-YV-8682 (DEP-YC-8682) is opened once the valves are re-positioned to drain the off-specification feed to DEP-VSL-00001. [Reference: 24590-BOF-J3-DEP-70001/70002/71001]

4.1.6.5.1.3.15 Concentrate to LAW Flow Interlock

This interlock protects the underground transfer piping feeding the LAW Facility by closing DEP-YV-8679 (DEP-YC-8679) and DEP-YV-8683 (DEP-YV-8683) when a high flow is detected by DEP-FI-8677 and neither DEP-HS-8431B nor SHR-HS-8310 is set for a LAW Facility transfer. DEP-YV-8682 (DEP-YC-8682) is opened once the valves are closed to drain any feed in the transfer line to DEP-VSL-00001. [Reference: 24590-BOF-J3-DEP-70001/70002/71001]

4.1.6.5.1.3.16 Evaporator Concentrate Vessel Recirculation/Eductor Valve Interlock

This interlock maintains alignment between the vessel outlet valves and recirculation/eductor valves by closing the applicable recirculation and eductor valves when the associated vessel outlet valve closes. DEP-YV-8424 (DEP-YC-8424) and DEP-YV-8428 (DEP-YC-8428) are closed when the DEP-VSL-00003A outlet valve (DEP-YV-8360) closes. DEP-YV-8425 (DEP-YC-8425) and DEP-YV-8429 (DEP-YC-8429) are closed when the DEP-VSL-00003B outlet valve (DEP-YV-8371) closes. DEP-YV-8426 (DEP-YC-8426) and DEP-YV-8430 (DEP-YC-8430) are closed when the DEP-VSL-00003C outlet valve (DEP-YV-8382) closes. [Reference: 24590-BOF-J3-DEP-70512/70513/70514]

4.1.6.5.1.3.17 Overhead Sampling Vessel High Level Interlock*

This interlock protects DEP-VSL-00004A/B from overfilling by preventing transfers from various sources within the EMF to DEP-VSL-00004A/B. The following actions occur when a high level is detected by DEP-LI-8305/8312:

- The overhead sampling vessel inlet valves, DEP-YV-8301/8308 close
- The overhead sampling vessel LVP valves, DEP-YV-8302/8309 close
- The overhead sampling vessel off-specification condensate valves, DEP-YV-8316/8318 close
- The east process area sump pumps, DEP-PMP-00032A/B, stop
- The feed vessel area sump pumps, DEP-PMP-00034A/B, stop

[Reference: 24590-BOF-J3-DEP-70405/70408/71401/41402]

4.1.6.5.1.3.18 Overhead Sampling Vessel Low Level Interlock

This interlock protects the overhead sampling vessel transfer/recirculation pumps from dry-running and overheating by stopping DEP-PMP-00004A/B/C (DEP-YC-8315/8317/8319) when a low level is detected by DEP-LI-8305 or DEP-LI-8312 and the associated vessel outlet valve (DEP-YV-8307 or DEP-YV-8314) is open, indicating that the associated vessel is emptying. [Reference: 24590-BOF-J3-DEP-70403/70410/71401/71402]

4.1.6.5.1.3.19 Overhead Sampling Vessel Transfer/Recirculation Pump Discharge Pressure Interlock

This interlock prevents cavitation and mechanical failure by stopping DEP-PMP-00004A/B/C (DEP-YC-8315/8317/8319) when an abnormally high pressure is detected by DEP-PI-8322. The pumps are also stopped when an abnormally low pressure is detected by DEP-PI-8322 and the units are in operation. [Reference: 24590-BOF-J3-DEP-70403/70410/71403]

4.1.6.5.1.3.20 Overhead Sampling Vessel Transfer/Recirculation Pump Flow Interlock

This interlock provides pump protection by stopping DEP-PMP-00004A/B/C (DEP-YC-8315/8317/8319) when an abnormally low flow is detected by DEP-FI-8321 and any two units are in operation. If any pump is operating and the flow continues to decrease, the unit is stopped. [Reference: 24590-BOF-J3-DEP-70403/70410/71404]

4.1.6.5.1.3.21 Overhead Sampling Vessel Outlet Valve Permissive

This interlock prevents the simultaneous transfer from DEP-VSL-00004A and DEP-VSL-00004B by preventing the outlet valves, DEP-YV-8307/8314 (DEP-YC-8307/8314) from opening unless the other vessel outlet valve is closed. [Reference: 24590-BOF-J3-DEP-70406/70409]

4.1.6.5.1.3.22 Overhead Sampling Vessel Eductor Valve Interlock

This interlock prevents the cross-mixing of DEP-VSL-00004A/B by closing the overhead sampling vessel eductor valves, DEP-YV-8304/8311 (DEP-YC-8304/8311), when their associated vessel outlet valve (DEP-YV-8307/8314) is not open. [Reference: 24590-BOF-J3-DEP-70404/70407]

4.1.6.5.1.3.23 Overhead Sampling Vessel Transfer Volume Interlock

This interlock prevents excess evaporator condensate transfers from DEP-VSL-00004A/B to DEP-VSL-00002 or DEP-VSL-00005A/B by stopping DEP-PMP-00004A/B/C (DEP-YC-8315/8317/8319) when the high transfer volume setpoint of DEP-FQSH-8321 is reached and the pumps are in the manual mode. [Reference: 24590-BOF-J3-DEP-70003/70403/71404]

4.1.6.5.1.3.24 Overhead Sampling Vessel Valve Alignment Interlock

This interlock prevents inadvertent transfers from DEP-VSL-00004A/B by stopping DEP-PMP-00004A/B/C (DEP-YC-8315/8317/8319) when the vessel outlet valves are not aligned in accordance with the selection made at DEP-HS-8323A or when the downstream transfer valves are not aligned in accordance with the selection made at DEP-HS-8323B. [Reference: 24590-BOF-J3-DEP-70003/70401/70402/70403]

4.1.6.5.1.3.25 Process Condensate Lag Storage Vessel High Level Interlock*

This interlock protects DEP-VSL-00005A/B from overfilling by preventing transfers from various sources within the EMF to DEP-VSL-00005A/B. The following actions occur when a high level is detected by DEP-LI-8458/8468:

- The process condensate lag storage vessel inlet valves, DEP-YV-8451/8461 close
- The process condensate lag storage vessel steam blowdown valves, DEP-YV-8454/8464 close
- The east process area sump pumps, DEP-PMP-00033A/B, stop
- The process condensate vessel sump pumps, DEP-PMP-00035A/B, stop

[Reference: 24590-BOF-J3-DEP-70606/70607/70609/70611/71601/71602]

4.1.6.5.1.3.26 Process Condensate Lag Storage Vessel Low Level Interlock

This interlock protects the process condensate lag storage transfer and process condensate lag storage recirculation pumps from dry-running and overheating by stopping DEP-PMP-00005A/B (DEP-YC-8472/8473) and DEP-PMP-00015A/B/C (DEP-YC-8489/8490/8491) when a low level is detected by DEP-LI-8458 or DEP-LI-8468. [Reference: 24590-BOF-J3-DEP-70604/70605/71601/71602]

4.1.6.5.1.3.27 Process Condensate Lag Storage Vessel Recirculation Pump Discharge Pressure Interlock

This interlock prevents cavitation and mechanical failure by stopping DEP-PMP-00015A/B/C (DEP-YC-8489/8490/8491) when an abnormally high pressure is detected by DEP-PI-8492. The pumps are also stopped when an abnormally low pressure is detected by DEP-PI-8492 and any of the units is in operation. [Reference: 24590-BOF-J3-DEP-70604/70617/71603]

4.1.6.5.1.3.28 Process Condensate Lag Storage Vessel Recirculation Pump Discharge Flow Interlock

This interlock provides pump protection by stopping DEP-PMP-00015A/B/C (DEP-YC-8489/8490/8491) when an abnormally low flow is detected by DEP-FI-8493 and any of the units is in operation. [Reference: 24590-BOF-J3-DEP-70604/70617/71605]

4.1.6.5.1.3.29 Process Condensate Lag Storage Vessel Primary Recirculation Valve Interlock

This interlock provides pump protection by stopping DEP-PMP-00015A/B/C (DEP-YC-8489/8490/8491) when neither of the process condensate lag storage vessel primary recirculation valves (DEP-YV-8452/8462) are open and any of the units is in operation. [Reference: 24590-BOF-J3-DEP-70604/70617]

4.1.6.5.1.3.30 Process Condensate Lag Storage Vessel Flush Volume Interlock

This interlock prevents excess process condensate flush transfers from DEP-VSL-00005A/B to the outlet of DEP-VSL-00003A/B/C and DEP-FILT-00003 by stopping DEP-PMP-00015A/B/C (DEP-YC-8489/8490/8491) when the high transfer volume setpoint of DEP-FQSH-8496 is reached and any of the pumps is in the manual mode. [Reference: 24590-BOF-J3-DEP-70003/70604/71604]

4.1.6.5.1.3.31 Process Condensate Lag Storage Vessel Recirculation Pump Valve Alignment Interlock*

This interlock prevents inadvertent transfers from DEP-VSL-00005A/B by stopping DEP-PMP-00015A/B/C (DEP-YC-8489/8490/8491) when the vessel outlet and primary recirculation valves are not aligned in accordance with the selection of DEP-VSL-00005A or DEP-VSL-00005B made at DEP-HS-8480A or all the following mis-alignments occur simultaneously:

- The DEP-VSL-00005A/B valves are not aligned for mixing in accordance with DEP-HS-8497
- The DEP-PMP-00001A/B flush valves are not aligned in accordance with DEP-HS-8199
- The DEP-VSL-00003A/B/C valves are not aligned for a Tank Farms transfer in accordance with DEP-HS-8431B
- The DEP-VSL-00003A/B/C valves are not aligned for a Tank Farms transfer in accordance with DEP-HS-8431A and DEP-HS-8431B

[Reference: 24590-BOF-J3-DEP-70003/70215/70502/70516/70602/70603]

4.1.6.5.1.3.32 Process Condensate Lag Storage Vessel Eductor Valve Interlock

This interlock prevents the cross-mixing of DEP-VSL-00005A/B by closing the process condensate lag storage vessel eductor valves, DEP-YV-8456/8467 (DEP-YC-8456/8467), when their associated vessel outlet valve (DEP-YV-8460/8494) is not open. [Reference: 24590-BOF-J3-DEP-70608/70610]

4.1.6.5.1.3.33 Process Condensate Lag Storage Vessel Outlet Valve Permissive

This interlock prevents the simultaneous transfer from DEP-VSL-00005A and DEP-VSL-00005B by preventing the outlet valves, DEP-YV-8460/8494 (DEP-YC-8460/8494) from opening unless the other vessel outlet valve is closed. [Reference: 24590-BOF-J3-DEP-70612/70613]

4.1.6.5.1.3.34 Process Condensate Lag Storage Vessel Transfer Pump Discharge Pressure Interlock

This interlock prevents cavitation and mechanical failure by stopping DEP-PMP-00005A/B (DEP-YC-8472/8473) when an abnormally high pressure is detected by DEP-PI-8474. The pumps are also stopped when an abnormally low pressure is detected by DEP-PI-8474 and either of the units is in operation. [Reference: 24590-BOF-J3-DEP-70605/70618/71609]

4.1.6.5.1.3.35 Process Condensate Lag Storage Vessel Transfer Pump Discharge Flow Interlock

This interlock provides pump protection by stopping DEP-PMP-00005A/B (DEP-YC-8472/8473) when an abnormally low flow is detected by DEP-FI-8475 and either of the units is in operation. [Reference: 24590-BOF-J3-DEP-70605/70618/71607]

4.1.6.5.1.3.36 Process Condensate Lag Storage Vessel Transfer Volume Interlock

This interlock prevents excess evaporator condensate transfers from DEP-VSL-00005A/B by stopping DEP-PMP-00005A/B (DEP-YC-8472/8473) when the transfer volume setpoint of DEP-FQSH-8475 is reached and either of the pumps is in the manual mode. [Reference: 24590-BOF-J3-DEP-70003/70605/71607]

4.1.6.5.1.3.37 Condensate to LERF Radiation Interlock

This interlock prevents the transfer of radioactive process condensate that would exceed the acceptance limits of LERF/ETF by initiating the following when high radiation is detected by DEP-RI-8476:

- Stopping DEP-PMP-00005A/B (DEP-YC-8472/8473) when the transfer valves are aligned for LERF transfers in accordance with the selection made at DEP-HS-8480B
- Closing DEP-YV-8487 (DEP-YC-8487)

[Reference: 24590-BOF-J3-DEP-70605/70616/71606]

4.1.6.5.1.3.38 Condensate to LERF Conductivity Interlock

This interlock prevents the transfer of off-specification process condensate that would exceed the acceptance limits of LERF/ETF by initiating the following when high conductivity is detected by DEP-CI-8477:

- Stopping DEP-PMP-00005A/B (DEP-YC-8472/8473) when the transfer valves are aligned for LERF transfers in accordance with the selection made at DEP-HS-8480B
- Closing DEP-YV-8487 (DEP-YC-8487)

[Reference: 24590-BOF-J3-DEP-70605/70616/71606]

4.1.6.5.1.3.39 Condensate to LERF pH Interlock

This interlock prevents the transfer of off-specification process condensate that would exceed the acceptance limits of LERF/ETF by initiating the following when either high or low pH is detected by DEP-AI-8478:

- Stopping DEP-PMP-00005A/B (DEP-YC-8472/8473) when the transfer valves are aligned for LERF transfers in accordance with the selection made at DEP-HS-8480B
- Closing DEP-YV-8487 (DEP-YC-8487)

[Reference: 24590-BOF-J3-DEP-70605/70616/71606]

4.1.6.5.1.3.40 Condensate to LERF Temperature Interlock

This interlock prevents the transfer of off-specification process condensate that would exceed the acceptance limits of LERF/ETF by initiating the following when high temperature is detected by DEP-TI-8479:

- Stopping DEP-PMP-00005A/B (DEP-YC-8472/8473) when the transfer valves are aligned for LERF transfers in accordance with the selection made at DEP-HS-8480B
- Closing DEP-YV-8487 (DEP-YC-8487)

[Reference: 24590-BOF-J3-DEP-70605/70616/71606]

4.1.6.5.1.3.41 Process Condensate Lag Storage Transfer Pump Valve Alignment Interlock

This interlock prevents inadvertent transfers of evaporator condensate when a flow path is not available or a valve mis-alignment is present by stopping DEP-PMP-00005A/B (DEP-YC-8472/8473) when the vessel inlet and outlet valves are not aligned with the configuration selected at DEP-HS-8480A or the downstream transfer valves are not in alignment with the configuration selected at DEP-HS-8480B while either of the pumps is in the manual mode. [Reference: 24590-BOF-J3-DEP-70003/70601/70602/70605]

4.1.6.5.1.3.42 Condensate to LERF Transfer Volume Interlock

This interlock prevents excess evaporator condensate transfers from DEP-VSL-00005A/B to LERF/ETF by stopping DEP-PMP-00005A/B (DEP-YC-8472/8473) when the transfer volume setpoint of DEP-FQSH-8482 is reached and either of the pumps is in the manual mode. [Reference: 24590-BOF-J3-DEP-70003/70605/71608]

4.1.6.5.1.3.43 Process Condensate Filter Pressure Interlock

This interlock protects DEP-FILT-00002 and the downstream transfer line from over-pressurization by stopping DEP-PMP-00005A/B (DEP-YC-8472/8473) when a high pressure is detected by DEP-PI-8498. [Reference: 24590-BOF-J3-DEP-70605/71610]

4.1.6.5.1.4 Other DEP System Interlocks, Bypasses, and Permissives

4.1.6.5.1.4.1 West Process Area Sump Level Interlock

This interlock prevents the west process area sump pumps from dry-running by stopping DEP-PMP-00032A/B (DEP-YC-8627/8630) when a low level is detected by DEP-LI-8626/8629. [Reference: 24590-BOF-J3-DEP-70901/71901]

4.1.6.5.1.4.2 West Process Area Sump Pump Interlock

This interlock prevents the west process area sump pumps from overheating by stopping DEP-PMP-00032A/B (DEP-YC-8627/8630) when their associated discharge valves, DEP-YV-8628/8631, are closed. The interlock also seals the flow path from DEP-SUMP-00002A/B by closing DEP-YV-8628/8631 (DEP-YC-8628/8631) when their associated pump is not running. [Reference: 24590-BOF-J3-DEP-70901/70902]

4.1.6.5.1.4.3 Feed Vessel Area Sump Level Interlock

This interlock prevents the feed vessel area sump pumps from dry-running by stopping DEP-PMP-00034A/B (DEP-YC-8634/8657) when a low level is detected by DEP-LI-8632/8656. [Reference: 24590-BOF-J3-DEP-70903/71901]

4.1.6.5.1.4.4 Truck Bay Sump Level Interlock

This interlock prevents the truck bay sump pump from dry-running by stopping DEP-PMP-00038 (DEP-YC-8649) when a low level is detected by DEP-LI-8648. [Reference: 24590-BOF-J3-DEP-70906/71901]

4.1.6.5.1.4.5 East Process Area Sump Level Interlock

This interlock prevents the east process area sump pumps from dry-running by stopping DEP-PMP-00033A/B (DEP-YC-8651/8653) when a low level is detected by DEP-LI-8646/8647. [Reference: 24590-BOF-J3-DEP-70908/71901]

4.1.6.5.1.4.6 East Process Area Sump Pump Interlock*

This interlock prevents the east process area sump pumps from overheating by stopping DEP-PMP-00033A/B (DEP-YC-8651/8653) when the process condensate lag storage vessel minimum recirculation valves, DEP-YV-8453/8663, are closed. [Reference: TBD]

4.1.6.5.1.4.7 Process Condensate Vessel Area Sump Level Interlock

This interlock prevents the process condensate vessel area sump pumps from dry-running by stopping DEP-PMP-00035A/B (DEP-YC-8639/8642) when a low level is detected by DEP-LI-8638/8641. [Reference: 24590-BOF-J3-DEP-70910/71901]

4.1.6.5.1.4.8 Process Condensate Vessel Area Sump Pump Interlock*

This interlock prevents the process condensate vessel area sump pumps from overheating by stopping DEP-PMP-00035A/B (DEP-YC-8639/8642) when the process condensate lag storage vessel minimum recirculation valves, DEP-YV-8453/8663, are closed. [Reference: TBD]

4.1.6.5.1.4.9 Tank Farms Transfer Line Leak Interlock

This interlock terminates the transfer of conditioned evaporator concentrate/feed to Tank Farms by initiating the following when a leak is detected by DEP-LAH-8701:

- Stopping DEP-PMP-00012A/B/C when DEP-HS-8902 is aligned for a Tank Farms transfer
- Stopping DEP-PMP-00003A/B when DEP-HS-8431B is aligned for a Tank Farms transfer
- Stopping DEP-PMP-00015A/B/C
- Stopping SNR-PMP-00022
- Closing DEP-YV-8405

[Reference: 24590-BOF-J3-DEP-70004/70204/70213/70509/70604, 24590-BOF-J3-SNR-70002]

4.1.6.5.1.4.10 LAW Facility Feed Transfer Line Leak Interlock

This interlock terminates the transfer of evaporator concentrate and the TOC feed to the LAW Facility by initiating the following when a leak is detected by DEP-LAH-8703:

- Stopping DEP-PMP-00003A/B when DEP-HS-8431B is aligned for a LAW Facility transfer
- Stopping SHR-PMP-00025 when SHR-HS-8310 is aligned for a LAW Facility transfer
- Closing DEP-YV-8683

[Reference: 24590-BOF-J3-DEP-70001/70004/70509, 24590-BOF-J3-SHR-70002]

4.1.6.5.1.4.11 LAW RLD Transfer Line Leak Interlock

This interlock terminates the transfer of LAW RLD system effluent to DEP-VSL-00002 by stopping LAW-RLD-PMP-00001A/B and LAW-RLD-PMP-00003A/B when a leak is detected by DEP-LAH-8706. [Reference: 24590-BOF-J3-DEP-70005, 24590-LAW-J3-RLD-00002/00003/00007/00008]

4.1.6.5.1.4.12 LAW LVP Transfer Line Leak Interlock

This interlock terminates the transfer of LAW LVP system effluent to DEP-VSL-00004A/B by stopping LVP-PMP-00002A/B when a leak is detected by DEP-LAH-8705. [Reference: 24590-BOF-J3-DEP-70005, 24590-LAW-J3-LVP-00006]

4.1.6.5.1.4.13 Lab RLD Transfer Line Leak Interlock

This interlock terminates the transfer of Lab RLD system effluent to DEP-VSL-00002 by stopping LAB-RLD-PMP-00182A/B when a leak is detected by DEP-LAH-8704. [Reference: 24590-BOF-J3-DEP-70005, 24590-LAB-J3-RLD-00003]

4.1.6.5.2 DVP System Interlocks, Bypasses, and Permissives

4.1.6.5.2.1 Exhauster Start Permissive

This permissive prevents DVP-EXHR-00001A/B (DVP-YC-8105A/B) from starting unless their associated inlet valve (DVP-V-00031/00023) is open, as indicated by DVP-ZI-8119/8121. [Reference: 24590-BOF-J3-DVP-70002/70003]

4.1.6.5.2.2 Inlet Valve Interlock

This interlock provides exhauster protection by stopping DVP-EXHR-00001A/B (DVP-YC-8105A/B) when their associated inlet valve closes, as indicated by DVP-ZI-8119/8121, while the exhauster is in operation. [Reference: 24590-BOF-J3-DVP-70002/70003]

4.1.6.5.2.3 Outlet Valve Interlock

This interlock provides exhauster protection by stopping DVP-EXHR-00001A/B (DVP-YC-8105A/B) when their associated outlet valve (DVP-YV-8120/8122) closes while the exhauster is in operation. [Reference: 24590-BOF-J3-DVP-70002/70003]

4.1.6.5.2.4 Low Speed Interlock

This interlock stops DVP-EXHR-00001A/B (DVP-YC-8105A/B) when a low speed is detected by DVP-SI-8110/8116 and the unit is running, indicating that there may be a mechanical issue with the operating exhauster and initiating the switch-over to the other exhauster train. [Reference: 24590-BOF-J3-DVP-71002/71003]

4.1.6.5.2.5 Low Flow Interlock

This interlock stops DVP-EXHR-00001A/B (DVP-YC-8105A/B) when a low flow is detected by DVP-FI-8111/8117 and the unit is running, indicating that there may be a mechanical issue with the operating exhauster and initiating the switch-over to the other exhauster train. [Reference: 24590-BOF-J3-DVP-71002/71003]

4.1.6.5.2.6 High Temperature Interlock

This interlock stops DVP-HTR-00001A/B (DVP-YC-8106/8112) when a high temperature is detected by DVP-TI-8107/8113, indicating that there may be a mechanical issue with the preheater integral temperature elements and controller. [Reference: 24590-BOF-J3-DVP-71002/71003]

4.1.6.5.3 ACV System Interlocks, Bypasses, and Permissives

This section will be updated at a later revision when the C&I logic diagrams are issued for the ACV system.

4.2 Operations

4.2.1 Initial Configuration (Pre-startup)

This section provides the proper configuration for system operation prior to those systems being started. The supply of power and the operation of the individual components of the systems are verified prior to startup of the DEP, DVP, ACV, and C1V systems.

This section will be updated at a later revision upon the issuance of the preliminary system operating manuals.

4.2.2 System Startup

This section will be updated at a later revision upon the issuance of the preliminary system operating manuals.

4.2.3 Normal Operations

This section will be updated at a later revision upon the issuance of the preliminary system operating manuals.

4.2.3.1 Operational Constraint

An operational constraint is established in calculation 24590-BOF-Z0C-W13T-00002. During normal operations, dose rates in the areas of several penetrations in the EMF facility shielding will result in dose rates higher than the target dose rates. If it is necessary to perform work in the areas containing these penetrations, surveys are to be performed and work activities limited to reduce radiation exposure to facility workers. Penetrations identified in 24590-BOF-Z0C-W13T-00002 are located above the normally occupied work areas outside the facility. The specific penetrations to which this operational constraint applies are detailed in the calculation and in Attachment A to 24590-BOF-EIE-ENG-16-0001.

4.2.4 Off-Normal Operations

This section will be updated at a later revision upon the issuance of the preliminary system operating manuals.

4.2.4.1 Operational Constraint

An operational constraint is established in calculation 24590-BOF-M4C-V11T-00003. If, during off-normal operations, an undiluted line of feed (1500 gal) from the TOC that would normally be transferred to LCP-VSL-00001A/B is drained to DEP-VSL-00001, the degree of concentration in DEP-EVAP-00001 must be adjusted after the batch from DEP-VSL-00001 is transferred to DEP-VSL-00002. The flow rate of concentrate leaving the vessel should be no less than $1/10^{th}$ the feed rate. This will prevent the overconcentration of hydrogen generating organics and ions in DEP-EVAP-00001 and DEP-VSL-00003A/B/C and ensure that the ventilation systems in each of these vessels can vent hydrogen faster than it can be generated.

4.2.5 System Shutdown

This section will be updated at a later revision upon the issuance of the preliminary system operating manuals.

4.2.6 Safety Management Programs and Administrative Controls

RESERVED

4.3 Testing and Maintenance

RESERVED

4.3.1 Temporary Configurations

RESERVED

4.3.2 TSR-Required Surveillances

RESERVED

4.3.3 Non-TSR Inspections and Testing

RESERVED

4.3.4 Maintenance

4.3.4.1 Low Point Drain Vessel Agitator and Pumps

The low point drain vessel agitator (DEP-AGT-00001) is maintained in accordance with vendor documentation. Instructions and tasks required to change the agitator shaft and blades may require removal of the 50 in. vessel flange along with the agitator itself for disposal. Should any seal or bearing replacement be necessary that requires removal of the wet end of the unit, special considerations such as (TBD) are made. Packaging the agitator for removal precludes size reduction, although the drives can be packaged separately. Any replacement flange is procured in accordance with the applicable vendor documentation. Replacement assemblies can therefore utilize the flange lugs for lifting and placement into the operating configuration.

The low point drain vessel submersible pumps (DEP-PMP-00001A/B) are maintained in accordance with vendor documentation. Should any seal of bearing replacement be necessary that requires removal of the wet end, special considerations such as (TBD) are made. Packaging the pumps for removal precludes size reduction. Replacement pumps can be assembled exterior to the LAW effluent drain tank building and the wet end is complete prior to installation from the top of the vessel.

4.4 Supplemental Information

RESERVED

5 References and Design Documents List

5.1 Source / Basis References

Document Number	Rev	Title	Text Reference
24590-WTP-DB-ENG-01-001	006	*Basis of Design*	BOD
24590-WTP-ICD-MG-01-006	007	*ICD-06 Interface Control Document for Dilute Radioactive Dangerous Liquid Effluents*	ICD-06
24590-WTP-ICD-MG-01-009	006	*ICD 09 – Interface Control Document for Land for Siting*	ICD-09
24590-WTP-ICD-MG-01-030	000	*ICD 30 - Interface Control Document for Direct LAW Feed*	ICD-30
24590-WTP-ICD-MG-01-031	000	*ICD-31 Interface Control Document for DFLAW Effluent Returns to Double-Shell Tanks*	ICD-31
24590-WTP-RPT-OP-01-001	008	*Operations Requirements Document*	ORD
24590-WTP-SRD-ESH-01-001-02	009	*Safety Requirements Document, Volume II*	SRD
24590-WTP-RPP-ESH-01-001	003	*Radiation Protection Program for Design, Construction, Commissioning, and Operations*	RPP
DE-AC27-01RV14136	N/A	*DOE Contract*	WTP Contract
NOC 1043	N/A	*WDOH Radioactive Air Emissions NOC Approval for the WTP Effluent Management Facility – Permit Conditions*	NOC 1043
WA7890008967	N/A	*Dangerous Waste Portion of RCRA Permit*	DWP

5.2 Other References

Document Number	Rev	Title
24590-BOF-3YD-50-00002	003	*Facility Description for the Balance of Facilities*
24590-BOF-A5-25-05200001	002	*LAW Effluent Process BLDG 25 Drain Tank BLDG 25A Utility BLDG 26 Architectural Room Finish Schedule*
24590-BOF-ADR-J-18-0001	000	*Environmental Monitoring and Radiological Protection Equipment*
24590-BOF-DD-25-00015	000	*Effluent Management Facility 24 Inch Dia. Sump in Secondary Containment Sections and Details*
24590-BOF-FHA-RAFP-FP-0001	000	*Fire Hazards Analysis (FHA) for the Effluent Management Facility (EMF)*
24590-BOF-M0-25-00003	000	*Balance of Facilities LAW Effluent Process Bldg. & LAW Effluent Drain Tank Bldg. & LAW Effluent Utility Bldg. Wall Penetration Schedule*
24590-BOF-M0-DEP-00001001	00A	*BOF/EMF Design Proposal Drawing Sampling Fume Hood*
24590-BOF-PER-J-16-001	001	*System Logic Description for the Direct Feed LAW Effluent Management Facility Process System (DEP)*

Document Number	Rev	Title
24590-BOF-PER-M-16-003	000	*Dangerous Waste Permit (DWP) Liner Heights in the Effluent Management Facility (EMF)*
24590-BOF-RPT-PR-15-001	001	*Direct Feed LAW Process Corrosion Data*
24590-BOF-U1-25-00001	000	*Balance of Facilities LAW Effluent Process BLDG & LAW Effluent Drain Tank BLDG Fire Barrier Drawing Elevation 0 Feet – 0 Inches*
24590-BOF-U1-26-00001	000	*Balance of Facilities LAW Effluent Utility BLDG & LAW Effluent Electrical BLDG Fire Barrier Drawing Elevation 0 Feet – 0 Inches*
24590-LAW-3ZD-20-00002	001	*LAW Facility Design Description*
24590-WTP-3DP-G04B-00046	033	*Engineering Drawings*
24590-WTP-3DP-G04B-00092	004	*System Verification*
24590-WTP-3DP-G04B-00093	008	*System and Facility Design Descriptions*
24590-WTP-3ZD-GRE-00001	000	*System Design Description for the Grounding and Lightning Protection Electrical (GRE) System*
24590-WTP-3ZD-MVE-00001	001	*LAW BOF and Lab Medium Voltage Electrical (MVE) Low Voltage Electrical (LVE) and DC Electrical (DCE) System Design Description*
24590-WTP-3ZD-SHR-00001	000	*System Design Description for the WTP Process Reagent Systems (AFR, MXR, NAR, SHR, SNR, SPR, STR)*
24590-WTP-B2-C12T-00001	004	*Interface Control Drawing*
24590-WTP-COR-MGT-15-00001	001	*Engineering, Procurement, and Construction (EPC) Code of Record*
24590-WTP-DC-ST-01-001	014	*Structural Design Criteria*
24590-WTP-DC-ST-04-001	04A	*Seismic Analysis and Design Criteria*
24590-WTP-ES-J-11-001	000	*Guidance for the Application of Emergency Stops on Equipment at the WTP*
24590-WTP-GPG-ENG-0170	008	*Impact Evaluation*
24590-WTP-GPG-M-027	006	*Recommended Slopes for Piping Systems*
24590-WTP-RPT-ENG-02-009	010	*Systems and Area Locators List and System Division of Responsibility*
CCN 033014	N/A	*Operations Level of Automation Criteria*
CCN 275986	N/A	*Liquid Waste Processing Facilities Waste Acceptance Criteria, HNF-3172*

5.3 System and Facility Design Documents

Document Number	Title
General Arrangement/Equipment Location Drawings	
24590-BOF-C2-C12T-00002	*RPP-WTP Site General Arrangement Plan*
24590-BOF-P1-25-00001	*Balance of Facilities LAW Effluent Process BLDG & LAW Effluent Drain Tank BLDG General Arrangement Plan at ELEV 0 FT – 0 IN*
24590-BOF-P1-25-00002	*Balance of Facilities LAW Effluent Process BLDG & LAW Effluent Drain Tank BLDG General Arrangement Sections A, B & C*
24590-BOF-P1-25-00003	*Balance of Facilities LAW Effluent Process BLDG & LAW Effluent Drain Tank BLDG Equipment Location Drawing Plan at ELEV 0 Foot – 0 Inches – Area 1*
24590-BOF-P1-25-00004	*Balance of Facilities LAW Effluent Process BLDG & LAW Effluent Drain Tank BLDG Equipment Location Drawing Plan at ELEV 0 Foot – 0 Inches – Area 2*

Document Number	Title
24590-BOF-P1-26-00001	*Balance of Facilities LAW Effluent Utility BLDG & LAW Effluent Electrical BLDG General Arrangement Plan at ELEV. 0 FT - 0 IN*
24590-BOF-P1-26-00002	*Balance of Facilities LAW Effluent Utility BLDG & LAW Effluent Electrical BLDG General Arrangement Sections A and B*
24590-BOF-P1-26-00003	*Balance of Facilities LAW Effluent Utility Building Equipment Location Drawing Plan at ELEV 0 Foot – 0 Inches*
24590-BOF-P1-50-00001	*RPP-WTP Plot Plan*
Facility Communication Layout Drawings	
24590-BOF-EF-25-00001	*EMF Process Building B25 & Low Point Drain Tank Building B25A Communication Layout Drawing*
24590-BOF-EF-26-00001	*EMF Utility Building B26 Communication Layout Drawing*
24590-BOF-EF-27-00001	*EMF Electrical Building B27 Communication Layout Drawing*
Facility Grounding Layout Drawings	
24590-BOF-EG-25-00001	*EMF Process Building 25 Grounding Layout Drawing Area 1*
24590-BOF-EG-25-00002	*EMF Process Building 25 Grounding Layout Drawing Area 2*
24590-BOF-EG-25-00003	*EMF Process Building 25 Grounding Layout Drawing Area 3*
24590-BOF-EG-25-00004	*EMF Process Building 25 Grounding Layout Drawing Area 4*
24590-BOF-EG-25-00005	*EMF Grounding Details*
24590-BOF-EG-25-00006	*EMF Process Building 25 Lightning Protection Plan Area 3*
24590-BOF-EG-25-00007	*EMF Process Building 25 Lightning Protection Plan Area 4*
24590-BOF-EG-25-00008	*EMF Process Building 25 Lightning Protection Plan Area 2*
24590-BOF-EG-25-00009	*EMF Process Building 25 Lightning Protection Plan Area 1*
24590-BOF-EG-25A-00001	*EMF Process Building 25A Grounding Layout Drawing*
24590-BOF-EG-25A-00002	*EMF Low Point Drain Tank Building 25A Lightning Protection Plan*
24590-BOF-EG-26-00001	*EMF Process Building 26 Grounding Layout Drawing Area 1*
24590-BOF-EG-26-00002	*EMF Process Building 26 Grounding Layout Drawing Area 2*
24590-BOF-EG-26-00003	*EMF Utility Building B26 Lightning Protection Plan*
24590-BOF-EG-27-00001	*EMF Process Building 27 Grounding Layout Drawing*
24590-BOF-EG-27-00002	*EMF Electrical Building B27 Lightning Protection Plan*
24590-BOF-EG-E41T-00003	*BOF LAW Effluent Main Ground Grid*
Facility Lighting Layout Drawings	
24590-BOF-EL-25-00001	*EMF Process Building 25 Lighting Layout Drawing at El. 0 Ft. – 0 In. Area 1*
24590-BOF-EL-25-00002	*EMF Process Building 25 Lighting Layout Drawing at El. 0 Ft. – 0 In. Area 2*
24590-BOF-EL-25-00003	*EMF Process Building 25 Lighting Layout Drawing at El. 0 Ft. – 0 In. Area 3*
24590-BOF-EL-25-00004	*EMF Process Building 25 Lighting Layout Drawing at El. 0 Ft. – 0 In. Area 4*
24590-BOF-EL-25-00005	*EMF Process Building 25 Lighting Layout Drawing at El. 0 Ft. – 0 In. Area 3 Partial Plan*
24590-BOF-EL-25-00006	*EMF Process Building 25 Lighting Layout Drawing at El. 0 Ft. – 0 In. Area 4 Partial Plan*
24590-BOF-EL-25A-00001	*EMF Low Point Drain Tank Building 25A Lighting Layout Drawing*

Document Number	Title
24590-BOF-EL-26-00001	*EMF Utility Building 26 Electrical Lighting Layout Drawing Area 1*
24590-BOF-EL-26-00002	*EMF Utility Building 26 Electrical Lighting Layout Drawing Area 2*
Facility Structural Design Calculations	
24590-BOF-DBC-25-00001	*LAW Effluent Process Building Concrete Basemat and Wall Design*
24590-BOF-DBC-25-00002	*LAW Effluent Drain Tank Building Design*
24590-BOF-DBC-26-00001	*Foundation Design for LAW Effluent Utility and Electrical Buildings*
24590-BOF-DDC-25-000001	*LAW Effluent Process and Drain Tank Buildings Vessels Support Anchorage Design*
24590-BOF-DDC-25-000002	*LAW Effluent Process Building Pipe Rack Support Anchorage Design*
24590-BOF-DDC-25-000003	*LAW Effluent Process Building Evaporator and Equipment Support Anchorage Design*
24590-BOF-DDC-25-000004	*LAW Effluent Process and Drain Tank Buildings Sumps and Liner Grillage Anchorage Design*
24590-BOF-DDC-25-000005	*LAW Effluent Process Building Gang Plate Design*
24590-BOF-DDC-25-000006	*LAW Effluent Process Building Equipment Platforms Transition Steel Design*
24590-BOF-DDC-25-000007	*LAW Effluent Process Building Column Anchors*
24590-BOF-DDC-25-000008	*LAW Effluent Process and Drain Tank Buildings Ring Beam Design*
24590-BOF-DDC-25-000009	*LAW Effluent Process Building Pump Frame Design*
24590-BOF-DDC-25-000010	*LAW Effluent Process Building Sub-Change Room Structural Framing Supports Design*
24590-BOF-DDC-25-000011	*LAW Effluent Process Building Caustic Tanks Embeds and Transition Frame Design*
24590-BOF-DDC-25-000012	*LAW Effluent Drain Tank Building Subgrade Structural Embed Design (-30 Feet up to 0 Feet)*
24590-BOF-DDC-25-000013	*LAW Effluent Management Facility Standard Stanchion Design*
24590-BOF-DDC-25-000014	*LAW Effluent Process Building Embed Design for Main Steel Frame and Other Miscellaneous Items*
24590-BOF-DDC-25-000015	*LAW Effluent Process Building Miscellaneous Equipment Frame Design*
24590-BOF-S0C-25-00001	*LAW Effluent Process Building Load Case and Load Combination Development*
24590-BOF-S0C-25-00002	*LAW Effluent Process Building Finite Element Model*
24590-BOF-SSC-25-00001	*LAW Effluent Process Building Steel Frame Design*
24590-BOF-SSC-25-00002	*Effluent Management Facility Pipe Rack Standard Connections*
24590-BOF-SSC-25-00003	*LAW Effluent Process Building Platforms EP0102B, EP0103B, and Modular Pipe Racks Steel Design*
24590-BOF-SSC-25-00004	*LAW Effluent Process Building Roof Steel Purlin and Deck System*
24590-BOF-SSC-25-00005	*LAW Effluent Process Building Truck Bay Canopy Design*
24590-BOF-SSC-25-00006	*LAW Effluent Process Building Primary Steel Connection Design*
24590-BOF-SSC-25-00007	*LAW Effluent Process Building Design of Girts, Sag Rods, and Other Secondary Steel Members*
24590-BOF-SSC-25-00008	*LAW Effluent Process Building LERF Area Platforms Steel Design*
24590-BOF-SSC-25-00009	*LAW Effluent Process Building Steel Member Design of Platform EP0103C*
24590-BOF-SSC-25-00010	*LAW Effluent Process Building Platform EP0102A Steel and Connection Design*
24590-BOF-SSC-25-00011	*LAW Effluent Process Building Steel Connection Design for Platform EP0103C*
24590-BOF-SSC-25-00012	*LAW Effluent Process Building Room E-0104 Airlock Platform Design*

Document Number	Title
24590-BOF-SSC-25-00013	*LAW Effluent Process Building Subchange & HEPA Rooms Steel Connections Design*
24590-BOF-SSC-25-00014	*LAW Effluent Process Building Subchange & HEPA Rooms Steel Connections Design*
24590-BOF-SSC-25-00015	*LAW Effluent Process Building Platform for DEP-FILT-00003 (Platform EP0103A)*
24590-BOF-SSC-25-00016	*LAW Effluent Process Building Steel Design for Condenser Support*
24590-BOF-SSC-25-00017	*LAW Effluent Process and Utility Building Misc. Pipe & Electrical Support Design*
24590-BOF-SSC-25-00018	*LAW Effluent Drain Tank Building Steel Design for Platform EDPB001C*
24590-BOF-SSC-25-00019	*LAW Effluent Process Building LERF Area Pipe Rack Steel Design*
24590-BOF-SSC-25-00020	*Design of Steel Supports for SNR-HTR-00002 and SHR-HTR-00007*
24590-BOF-SSC-25-00021	*LAW Effluent Process Building Pump Frame Design*
24590-BOF-SSC-25-00022	*LAW Effluent Process Building HEPA Filter Support Frame Design*
24590-BOF-SSC-25-00026	*EMF Non-Standard Cable Tray Support Design*
24590-BOF-SSC-26-00001	*Utility Building Pipe Rack Design*
24590-BOF-SSC-S15T-00026	*Utility Rack Steel Design for DFLAW Extension of Rack*
Structural Steel Platform Plans	
24590-BOF-S1-25-00003	*LAW Effluent Process BLDG 25 Structural Steel Platform EP0103A Plan and Sections*
24590-BOF-S1-25-00004	*LAW Effluent Process BLDG 25 Structural Steel Platform EP0102A Plan and Sections*
24590-BOF-S1-25-00005	*LAW Effluent Process BLDG 25 Structural Steel Platform EP0106A Plan and Sections*
24590-BOF-S1-25-00006	*LAW Effluent Process BLDG 25 Structural Steel Platform EP0106C and EP0106B Plans*
24590-BOF-S1-25-00010	*LAW Effluent Process BLDG 25 Structural Steel Platform EP0103C Plans*
24590-BOF-S1-25-00011	*LAW Effluent Process BLDG 25 Structural Steel Platform EP0103B Plans*
24590-BOF-S1-25-00012	*LAW Effluent Process BLDG 25 Structural Steel Platform EP0102B Plans*
24590-BOF-S1-25-00013	*LAW Effluent Process BLDG 25 Structural Steel Platform EP0102B Plan and Sections*
24590-BOF-S1-25-00101	*LAE Effluent Drain Tank Building 25A Structural Steel Platform EDPB001C Plan Sections and Details*
24590-BOF-S1-25-00102	*LAE Effluent Drain Tank Building 25A Structural Steel Platforms EDPB001A & EDPB001B Plans and Sections*
Process Flow Diagrams/Data	
24590-BOF-M5-V17T-00011	*Process Flow Diagram Direct Feed Effluent Transfer (System DEP)*
24590-BOF-M5-V17T-00012	*Process Flow Diagram Direct Feed Effluent Evaporator (System DEP)*
24590-BOF-M5-V17T-00013	*Process Flow Diagram Direct Feed Concentrate Transfer (System DEP and DVP)*
24590-BOF-M5-V17T-00014	*Process Flow Diagram Direct Feed Process Condensate Transfer (System DEP)*
P&IDs – DEP and DVP Systems	
24590-BOF-M6-DEP-00001001	*P&ID - BOF/EMF Direct Feed LAW - EMF Process System - Low Point Drain Vessel - DEP-VSL-00001*
24590-BOF-M6-DEP-00001002	*P&ID - BOF/EMF Direct Feed LAW EMF - Process System- Low Point Drain Vessel Pumps - DEP-PMP-00001A/B*
24590-BOF-M6-DEP-00002001	*P&ID - BOF/EMF - Direct Feed LAW EMF - Process System - Evaporator Feed Vessel - DEP-VSL-00002*
24590-BOF-M6-DEP-00002002	*P&ID - BOF/EMF Direct Feed LAW EMF – Process System Evaporator - Feed Vessel Recirculation Pumps - DEP-PMP-00012A/B/C*

Document Number	Title
24590-BOF-M6-DEP-00002003	*P&ID - BOF/EMF Direct Feed LAW EMF - Process System Evap Feed Vessel Trans Pumps - DEP-PMP-00002A/B*
24590-BOF-M6-DEP-00002004	*P&ID - BOF/EMF Direct Feed LAW EMF - Process System - Evaporator Feed Vessel - Prefilter DEP-FILT-00003*
24590-BOF-M6-DEP-00002005	*P&ID - BOF/EMF Direct Feed LAW EMF - Process System Evaporator - Chemical Mixing - DEP-MTEE-00001/00002*
24590-BOF-M6-DEP-00002006	*P&ID - BOF/EMF Direct Feed LAW EMF - Process System Evaporator Concentrate / Feed Vessels - LAW Effluent Cooler DEP-HX-00001*
24590-BOF-M6-DEP-00003001	*P&ID - BOF/EMF Direct Feed LAW EMF - Process System - Evaporator Separator - DEP-EVAP-00001*
24590-BOF-M6-DEP-00003002	*P&ID - BOF/EMF Direct Feed LAW EMF Process System Evaporator Reboiler - DEP-RBLR-00001*
24590-BOF-M6-DEP-00003003	*P&ID - BOF/EMF Direct Feed LAW EMF Process System Evaporator Concentrated Discharge Pumps - DEP-PMP-00007A/B*
24590-BOF-M6-DEP-00003004	*P&ID - BOF/EMF Direct Feed LAW EMF Process System Evaporator Condensers - DEP-COND-00001/2/3*
24590-BOF-M6-DEP-00003005	*P&ID - BOF/EMF Direct Feed LAW EMF Process System Evaporator Condensate Pumps - DEP-PMP-00006A/B*
24590-BOF-M6-DEP-00003006	*P&ID - BOF/EMF Direct Feed LAW EMF Process System Reboiler Condensate - DEP-VSL-00008*
24590-BOF-M6-DEP-00004001	*P&ID - BOF/EMF Direct Feed LAW EMF Process System Overhead Sampling Vessel - DEP-VSL-00004A*
24590-BOF-M6-DEP-00004002	*P&ID - BOF/EMF Direct Feed LAW EMF Process System Overhead Sampling Vessel - DEP-VSL-00004B*
24590-BOF-M6-DEP-00004003	*P&ID - BOF/EMF Direct Feed LAW EMF Process System Overhead Sampling VSL Pumps - DEP-PMP-00004A/B/C*
24590-BOF-M6-DEP-00005001	*P&ID - BOF/EMF Direct Feed LAW EMF Process System Evaporator Concentrate Vessel - DEP-VSL-00003A*
24590-BOF-M6-DEP-00005002	*P&ID - BOF/EMF Direct Feed LAW EMF Process System Evaporator Concentrate Vessel - DEP-VSL-00003B*
24590-BOF-M6-DEP-00005003	*P&ID - BOF/EMF Direct Feed LAW EMF Process System Evaporator Concentrate Vessel - DEP-VSL-00003C*
24590-BOF-M6-DEP-00005004	*P&ID - BOF/EMF Direct Feed LAW EMF Process System Evap Conc VSL Recirculation / Transfer Pumps - DEP-PMP-00003A/B*
24590-BOF-M6-DEP-00005005	*P&ID - BOF/EMF Direct Feed LAW EMF Process System Evap Concentrate Vessel Recirculation*
24590-BOF-M6-DEP-00006001	*P&ID - BOF/EMF Direct Feed LAW EMF Process System Process Condensate Lag Storage Veseel - DEP-VSL-00005A*
24590-BOF-M6-DEP-00006002	*P&ID - BOF/EMF Direct Feed LAW EMF Process System Process Condensate Lag Storage Vessel - DEP-VSL-00005B*
24590-BOF-M6-DEP-00006003	*P&ID - BOF/EMF Direct Feed LAW EMF Process System Lag Storage Vessel Transfer Pumps - DEP-PMP-00005A/B*
24590-BOF-M6-DEP-00006004	*P&ID - BOF/EMF Direct Feed LAW EMF Process System Lag Storage Vessel Recirc Pumps - DEP-PMP-00015A/B/C*

Document Number	Title
24590-BOF-M6-DEP-00009001	*P&ID - BOF/EMF Direct Feed LAW EMF Process System – Process Area Sumps - DEP-SUMP-00002A/B*
24590-BOF-M6-DEP-00009002	*P&ID - BOF/EMF Direct Feed LAW EMF Process System Process Vessel Area Sumps - DEP-SUMP-00004A/B*
24590-BOF-M6-DEP-00009003	*P&ID - BOF/EMF Direct Feed LAW EMF Process System Miscellaneous Sumps - DEP-SUMP-00008*
24590-BOF-M6-DEP-00009004	*P&ID - BOF/EMF Direct Feed LAW EMF - Process System – Process Area Sumps - DEP-SUMP-00003A/B*
24590-BOF-M6-DEP-00009005	*P&ID - BOF/EMF Direct Feed LAW Process System – Process Vessel Area Sumps - DEP-SUMP-00005A/B*
24590-BOF-M6-DEP-00010001	*P&ID - BOF/EMF Direct Feed LAW EMF Process System Underground Transfer Lines*
24590-BOF-M6-DEP-00011001	*P&ID - BOF/EMF Direct Feed LAW EMF Process System Effluent Facility Leak Detection DEP-LDB-00001 thru DEP-LDB-00006*
24590-BOF-M6-DEP-00012001	*P&ID - BOF/EMF Direct Feed LAW EMF Process System Sampling Pumps DEP-PMP-00042A/B*
24590-BOF-M6-DVP-00001001	*P&ID - BOF/EMF Direct Feed LAW EMF Vessel Vent Process System - DVP-EXHR-00001A/B*
P&IDs – Utility Systems	
24590-BOF-M6-AFR-00001001	*P&ID - BOF / EMF Direct Feed LAW EMF - Process System - Anti-Foam Reagent System*
24590-BOF-M6-BSA-00003001	*P&ID - BOF/EMF Breathing Service Air System Distribution*
24590-BOF-M6-DIW-00002001	*P&ID - BOF/EMF Demineralized Water System Distribution*
24590-BOF-M6-DIW-00002002	*P&ID - BOF/EMF Demineralized Water System Booster Pump DIW-PMP-00013*
24590-BOF-M6-DOW-00005001	*P&ID - BOF/EMF Domestic (Potable) Water System Distribution*
24590-BOF-M6-DOW-00005002	*P&ID - BOF/EMF Domestic (Potable) Water System Distribution*
24590-BOF-M6-FPW-00017	*P&ID - BOF FPW System EMF Process and Utility Building*
24590-BOF-M6-HPS-00022001	*P&ID - BOF/EMF High Pressure Steam System Distribution*
24590-BOF-M6-HPS-00023001	*P&ID - BOF/EMF High Pressure Steam System Secondary Loop HPS-HX-00011 and SCW-VSL-00054*
24590-BOF-M6-ISA-00001001	*P&ID - BOF-EMF Instrument Service Air System Distribution to EMF*
24590-BOF-M6-LPS-00001001	*P&ID - BOF/EMF Low Pressure Steam System Steam Condensate Water System LPS/SCW*
24590-BOF-M6-LPS-00001002	*P&ID - BOF/EMF Low Pressure Steam System Steam Condensate Water System LPS/SCW*
24590-BOF-M6-NLD-00008001	*P&ID - BOF / EMF Direct Feed LAW - Non-Radioactive Liquid Waste Disposal System Misc. Sumps - NLD-SUMP-00031 & 00032*
24590-BOF-M6-PCW-00005001	*P&ID - BOF/EMF Plant Cooling Water System Heat Exchanger PCW-HX-00025*
24590-BOF-M6-PCW-00005002	*P&ID - BOF/EMF Plant Cooling Water System Distribution PCW-PMP-00030A/B AND PCW-VSL-00052*
24590-BOF-M6-PSA-00007001	*P&ID - BOF / EMF Plant Service Air System Distribution to EMF PSA-VSL-00150*
24590-BOF-M6-PSW-00004001	*P&ID - BOF/EMF Process Service Water System EMF Distribution*

Document Number	Title
24590-BOF-M6-SCW-00008001	*P&ID - BOF/EMF Steam Condensate Water System SCW-TK-00025 Primary Condensate*
24590-BOF-M6-SHR-00003001	*P&ID - BOF/EMF Direct Feed LAW EMF Process System Caustic Tank - SHR-TK-00013*
24590-BOF-M6-SNR-00002001	*P&ID - BOF/EMF Direct Feed LAW EMF Process System Sodium Nitrite Tank - SNR-TK-00002*
P&IDs – Inter-Facility Underground Piping	
24590-BOF-M6-RLD-00012001	*P&ID - BOF Radioactive Liquid Waste Disposal System Underground Transfer Lines*
24590-BOF-M6-RLD-00012002	*P&ID - BOF Radioactive Liquid Waste Disposal System Underground Transfer Lines*
24590-LAB-M6-RLD-00002003	*P&ID - LAB Radioactive Liquid Waste Disposal System C3 Collection and Transfer RLD-PMP-00182A/B*
24590-LAW-M6-LCP-00001001	*P&ID - LAW LAW Concentrate Receipt Process System LCP-BULGE-00001*
24590-LAW-M6-LVP-00002005	*P&ID-LAW - LAW Secondary Offgas/Vessel Vent Process System Transfer Pumps LVP-PMP-00002A/B*
24590-LAW-M6-RLD-00001005	*P&ID - LAW Radioactive Liquid Waste Disposal System Plant Wash & SBS Condensate Collection RLD-BULGE-00004*
24590-LAW-M6-RLD-00001006	*P&ID - LAW Radioactive Liquid Waste Disposal System Plant Wash & SBS Condensate Collection RLD-BULGE-00004*
24590-PTF-M6-PWD-00058001	*P&ID-PTF Plant Wash and Disposal System Underground Transfer Lines*
24590-PTF-M6-PWD-00058002	*P&ID-PTF Plant Wash and Disposal System Underground Transfer Lines*
DEP and DVP System Design Calculations	
24590-BOF-JVC-DEP-00001	*Pressure Safety Valve Sizing for DEP-PSV-8680, -8681, and DEP-PSV-8399, -8400*
24590-BOF-JVC-DEP-00002	*Pressure Relief Valve (DEP-PSV-8495/-8500) Sizing for Process Condensate Filter (DEP-FILT-00002)*
24590-BOF-JVC-DEP-00004	*Relief Valve Sizing Calculation for the EMF Reboiler Condensate Collection Vessel (DEP-VSL-00008)*
24590-BOF-JVC-DEP-00007	*Pressure Relief Valve Sizing (PSV-8265, PSV-8266) on Process Condensate Filter (DEP-FILT-00004)*
24590-BOF-JVC-DEP-00010	*Relief Valve Sizing Calculation for the Evaporator Feed Vessel Prefilter (DEP-FILT-00003), DEP-PSV-8917/-8195)*
24590-BOF-JVC-DEP-00011	*Relief Valve Sizing Calculation for DEP-PSV-8918/8919 on PSA Line to DEP-FILT-00003*
24590-BOF-JVC-DEP-00012	*Relief Valve Sizing Calculation for SBS Condensate and Lab Effluent Supply Lines to DEP-FILT-00003 (DEP-PSV-8924/8925)*
24590-BOF-JVC-DEP-00015	*Relief Valve Sizing Calculation for DEP-PSV-8660, NLD-PSV-8809, and DEP-PSV-8686*
24590-BOF-JVC-DVP-00001	*Relief Valve Sizing for DVP-PSV-8123/8124*
24590-BOF-M0C-DEP-00001	*Flooding/Liner Heights Calculation in the EMF*
24590-BOF-M0C-DEP-00002	*Maximum Leakage Rate and Operator Response Time in the West Evaporator Process Area of the EMF*
24590-BOF-M4C-DEP-00001	*DFLAW Effluent Management Facility Air Emissions Estimate*
24590-BOF-M4C-V11T-00001	*DFLAW EMF Process (DEP) Estimated Radionuclide Concentrations for Shielding*

Document Number	Title
24590-BOF-M4C-V11T-00002	*DFLAW EMF Process (DEP) Estimated Radionuclide Concentrations for Inhalation Dose*
24590-BOF-M4C-V11T-00003	*Calculation of Hydrogen Generation Rates and Times to Low Flammability Limit for EMF*
24590-BOF-M4C-V11T-00004	*DFLAW EMF Process (DEP) Flowsheet Mass Balance Analysis for Input to Material Selection and Corrosion Assessments*
24590-BOF-M4C-V11T-00005	*Calculation of Effluent Management Facility Stream Chemical Ion Data*
24590-BOF-M4C-V11T-00006	*Calculation of Process Stream Properties for the Effluent Management Facility*
24590-BOF-M6C-DEP-00001	*DEP Sump, Sump Pump and Pipeline Sizing*
24590-BOF-M6C-DEP-00002	*DEP, SHR, and SNR Line Sizing for Miscellaneous Lines*
24590-BOF-M6C-DEP-00008	*DEP Evaporator System Line Sizing*
24590-BOF-M6C-DEP-00009	*Design Pressure and Temperature Calculation for the EMF DEP/DVP/AFR/NLD/SHR/SNR Systems*
24590-BOF-M6C-DEP-00011	*Leak Detection Capabilities in the EMF Facility*
24590-BOF-M6C-DEP-00012	*Overpressure Protection Calculation for DEP-VSL-00001, DEP-VSL-00002, DEP-VSL-00003A/B/C, DEP-VSL-00004A/B, DEP-VSL-00005A/B*
24590-BOF-M6C-DEP-00013	*DEP Vacuum Breaker Sizing*
24590-BOF-M6C-DEP-00014	*Relief Valve Sizing (DEP-PSV-8123) Calculation for DEP-PMP-00031*
24590-BOF-M6C-DEP-00016	*EMF DEP-SUMP-00004A/B Sampling System Design*
24590-BOF-M6C-DEP-00017	*Rupture Disk Sizing Calculation for DEP-PSE-8281, DEP-PSE-8282, and DVP-PSE-8214 (Overpressure Protection Calculation for DEP-EVAP-00001, DEP-COND-00001/2/3, and DEP-RBLR-00001)*
24590-BOF-M6C-DEP-00018	*Restriction Orifice Sizing Calculation for DEP-RO-00009*
24590-BOF-M6C-DVP-00001	*DFLAW EMF Vessel Vent Process System (DVP) Line Sizing*
24590-BOF-M6C-LCP-00001	*Pressure, Temperature, and Pipe Size for Transferring Treated LAW Feed from the ICD 30 Interface Point to the EMF and LAW Facility for DFLAW Operations*
24590-BOF-M6C-RLD-00002	*Pressure and Temperature for the RLD and DEP Pipelines from the EMF to the ICD 06 and ICD 31 Interface Point Nodes, for DFLAW Operations*
24590-BOF-MAC-DVP-00001	*DFLAW EMF Vessel Vent Process System (DVP) HEPA Filter, Preheater, and Exhaust Fan Sizing*
24590-BOF-MEC-DEP-00002	*DFLAW EMF (DEP) Heat Exchanger DEP-HX-00001 Heat Duty*
24590-BOF-MEC-DEP-00003	*Process Data for the DEP Evaporator Separator Vessel (DEP-EVAP-00001), Reboiler (DEP-RBLR-00001), Primary Condenser (DEP-COND-00001), and Recirculation Pump (DEP-PMP-00017)*
24590-BOF-MPC-DEP-00002	*BOF DEP Low Point Drain Vessel Pump (DEP-PMP-00001A/B) Sizing and Line Sizing*
24590-BOF-MPC-DEP-00003	*24590-BOF-MP-DEP-PMP-00005A/B Lag Storage Vessel Transfer Pump Sizing*
24590-BOF-MPC-DEP-00004	*BOF DEP Overhead Sampling Vessel Pump (DEP-PMP-00004A/B/C) Sizing and Line Sizing*
24590-BOF-MPC-DEP-00005	*DEP Evaporator Feed Vessel Recirculation Pump Sizing (DEP-PMP-00012A/B/C)*
24590-BOF-MPC-DEP-00006	*Mixing Eductor Sizing Calculation for Dep Vessels in the EMF Facility*
24590-BOF-MPC-DEP-00007	*DEP Evaporator Concentrate Vessel Transfer/Recirculation Pump (DEP-PMP-00003A/B) Sizing and Line Sizing*

Document Number	Title
24590-BOF-MPC-DEP-00008	*DEP Process Condensate Lag Storage Vessel Recirculation Pump (DEP-PMP-00015A/B/C) Sizing and Line Sizing*
24590-BOF-MPC-DEP-00009	*DEP Evaporator Concentrate Discharge Pump (DEP-PMP-00007A/B) Sizing and Line Sizing*
24590-BOF-MPC-DEP-00013	*DEP Evaporator Feed Vessel Transfer Pump (DEP-PMP-00002A/B) and Suction/Discharge Line Sizing*
24590-BOF-MPC-DEP-00014	*EMF DEP Sampling Pumps (DEP-PMP-00042A/B) Sizing*
24590-BOF-MPC-DEP-00015	*DEP Evaporator Condensate Discharge Pump (DEP-PMP-00006A/B) Sizing and Line Sizing*
24590-BOF-MPC-DEP-00016	*DEP Evaporator Recirculation Pump (DEP-PMP-00017) Pump, Line, and Restriction Orifice Sizing Calculation*
24590-BOF-MPC-DEP-00017	*Reboiler Condensate Pump (DEP-PMP-00008A/B), Vessel (DEP-VSL-00008), and Line Sizing*
24590-BOF-MVC-DEP-00001	*DEP Low Point Drain Vessel (DEP-VSL-00001) – Vessel Sizing, Vessel Overflow Nozzle Sizing, and Plant Wash System Sizing*
24590-BOF-MVC-DEP-00002	*Overhead Sampling Vessel (DEP-VSL-00004A/B) – Vessel Sizing, Vessel Overflow Nozzle Sizing, and Plant Wash System Sizing*
24590-BOF-MVC-DEP-00003	*Process Data for the Evaporator Feed Vessel (DEP-VSL-00002), Transfer Pumps (DEP-PMP-00002A/B), and Recirculation Pumps (DEP-PMP-00012A/B/C)*
24590-BOF-MVC-DEP-00004	*Process Condensate Lag Storage Vessel (DEP-VSL-00005A/B) – Vessel Sizing, Vessel Overflow Sizing, and Plant Wash System Sizing*
24590-BOF-MVC-DEP-00005	*DEP Evaporator Feed Vessel (DEP-VSL-00002) – Vessel Sizing, Vessel Overflow Nozzle Sizing, and Plant Wash System Sizing*
24590-BOF-MVC-DEP-00006	*Evaporator Concentrate Vessel (DEP-VSL-00003A/B/C) – Vessel Sizing, Vessel Overflow Sizing, and Plant Wash System Sizing*
24590-BOF-MVC-DEP-00007	*Process Data for the Overhead Sampling Vessels (DEP-VSL-00004A/B) and Pumps (DEP-PMP-00004A/B/C)*
24590-BOF-MVC-DEP-00008	*Process Data for the Process Condensate Lag Storage Vessels (DEP-VSL-00015A/B), Transfer Pumps (DEP-PMP-00005A/B), and Recirculation Pumps (DEP-PMP-00015A/B/C)*
24590-BOF-MVC-DEP-00009	*Batch Sizing Calculation of DEP (Direct Feed LAW Effluent Management Facility Process System) Vessels: DEP-VSL-00001, -00002, -00003A/B/C, -00004A/B, -00005A/B*
24590-BOF-MVC-DEP-00010	*Process Data for the Evaporator Concentrate Vessels, DEP-VSL-00003A/B/C, and Pumps, DEP-PMP-00003A/B*
24590-BOF-MVC-DEP-00011	*Process Data for the Low Point Drain Vessel, DEP-VSL-00001, and Pumps, DEP-PMP-00001A/B*
24590-BOF-MVC-M80T-00001	*DFLAW EMF Vessel Cyclic Datasheet Inputs and Fatigue Evaluation*
24590-BOF-P6C-DEP-00001	*BOF DEP Rad Transfer Piping System*
24590-PTF-M6C-PWD-00043	*WTP Underground Transfer Lines Minimum Detectable Leak Rate*
DEP and DVP System Mechanical Equipment Datasheets	
24590-BOF-M0D-DEP-00001	*BOF/EMF Sampling Fume Hood*
24590-BOF-MAD-DVP-00001	*Process Ventilation Exhauster*
24590-BOF-MBD-DEP-00001	*DEP Evaporator Reboiler*

Document Number	Title
24590-BOF-MCD-DEP-00001	*DEP Evaporator First Stage Ejectors DEP Evaporator Second Stage Ejectors*
24590-BOF-MED-DEP-00001	*Evaporator Concentrate/Feed LAW Effluent Cooler*
24590-BOF-MED-DVP-00001	*Process Ventilation HEPA Filter Preheater*
24590-BOF-MED-DEP-00004	*DEP Evaporator Primary Condenser*
24590-BOF-MED-DEP-00005	*DEP Evaporator Inter-Condenser*
24590-BOF-MED-DEP-00006	*DEP Evaporator After-Condenser*
24590-BOF-MFD-DEP-00001	*Mechanical Agitator DEP-AGT-00001 for Low Point Drain Vessel DEP-VSL-00001*
24590-BOF-MKD-DEP-00011	*HEPA Filter Data Sheet for DEP Evaporator Vacuum Breaker HEPA Filters (DEP-HEPA-00001A/B)*
24590-BOF-MPD-DEP-00001	*BOF DEP Evaporator Feed Vessel Transfer Pump*
24590-BOF-MPD-DEP-00002	*Evaporator Concentrate Transfer/Recirc Pumps*
24590-BOF-MPD-DEP-00003	*BOF DEP Overhead Sampling Vessel Transfer/Recirculation Pump*
24590-BOF-MPD-DEP-00004	*Process Condensate Lag Storage Vessel Transfer Pump*
24590-BOF-MPD-DEP-00005	*BOF DEP Evaporator Concentrate Discharge Pump*
24590-BOF-MPD-DEP-00006	*BOF EMF Evaporator Feed Vessel Recirculation Pump*
24590-BOF-MPD-DEP-00007	*BOF Process Condensate Lag Storage Vessel Recirculation Pump*
24590-BOF-MPD-DEP-00009	*Air Operated Diaphragm Pump*
24590-BOF-MPD-DEP-00010	*Mechanical Data Sheet: Vertical Submersible Centrifugal Pumps*
24590-BOF-MPD-DEP-00012	*DEP Evaporator Condensate Pump*
24590-BOF-MPD-DEP-00013	*DEP Evaporator Recirculation Pump*
24590-BOF-MPD-DEP-00015	*Low Point Drain Vessel Pumps*
24590-BOF-MPD-DEP-00016	*Mixing Eductors for Atmospheric Vessel DEP-VSL-00002*
24590-BOF-MPD-DEP-00017	*Mixing Eductors for Atmospheric Vessels DEP-VSL-00003A/B/C*
24590-BOF-MPD-DEP-00018	*Mixing Eductors for Atmospheric Vessels DEP-VSL-00004A/B*
24590-BOF-MPD-DEP-00019	*Mixing Eductors for Atmospheric Vessels DEP-VSL-00005A/B*
24590-BOF-MPD-DEP-00020	*BOF/EMF DEP Sampling Pumps*
24590-BOF-MVD-DEP-00002	*Low Point Drain Vessel*
24590-BOF-MVD-DEP-00003	*Evaporator Feed Vessel*
24590-BOF-MVD-DEP-00004	*Evaporator Concentrate Vessel*
24590-BOF-MVD-DEP-00005	*Overhead Sampling Vessel*
24590-BOF-MVD-DEP-00006	*Process Condensate Lag Storage Vessel*
24590-BOF-MVD-DEP-00008	*Reboiler Condensate Collection Vessel with Two (2) Reboiler Condensate Pumps*
24590-BOF-MVD-DEP-00009	*Evaporator Separator Vessel*
C&I Logic Diagrams	
24590-BOF-J3-DVP-70001	*Logic Diagram DFLAW DVP Exhauster Motor Duty/Standby DVP-HS-8105*
24590-BOF-J3-DVP-70002	*Logic Diagram DFLAW DVP Exhauster DVP-EXHR-00001A, Heater DVP-HTR-00001A, & Valves DVP-YV-8119, -8120*
24590-BOF-J3-DVP-70003	*Logic Diagram DFLAW DVP Exhauster DVP-EXHR-00001B, Heater DVP-HTR-00001B, & Valves DVP-YV-8121, -8122*

Document Number	Title
24590-BOF-J3-DVP-71001	*Functional Diagram DFLAW DVP Exhaust Header Instrumentation*
24590-BOF-J3-DVP-71002	*Functional Diagram DFLAW DVP Exhauster DVP-EHXR-00001A Instrumentation*
24590-BOF-J3-DVP-71003	*Functional Diagram DFLAW DVP Exhauster DVP-EHXR-00001B Instrumentation*
24590-BOF-J3-DVP-71004	*Functional Diagram DFLAW DVP Vessel Purge Air & Vent Instrumentation*
HVAC System V&IDs	
24590-BOF-M8-ACV-00001001	*BOF/EMF Utility/Process Bldgs. Plant Room V&ID ACV Supply System*
24590-BOF-M8-ACV-00001002	*BOF/EMF Utility Bldg. Volumetric V&ID ACV System*
24590-BOF-M8-ACV-00001003	*BOF/EMF Evaporator Process Drain Tank Bldgs. Volumetric V&ID ACV System*
24590-BOF-M8-ACV-00001004	*BOF/EMF Evaporator Process Bldg. Volumetric V&ID ACV System*
24590-BOF-M8-ACV-00001005	*BOF.EMF Utility/Process Bldgs. – Plant Room V&ID ACV Exhaust System*
24590-BOF-M8-ACV-00001006	*BOF.EMF Utility/Process Bldgs. – Plant Room V&ID ACV Exhaust System*
24590-BOF-M8-ACV-00001007	*BOF.EMF Utility/Process Bldgs. – Plant Room V&ID ACV Exhaust System*
24590-BOF-M8-ACV-00001008	*BOF/EMF Utility/Process Bldgs. Plant Room V&ID Indirect/Direct Evaporative Cooler Controls*
24590-BOF-M8-C1V-00002	*BOF/EMF C1 Annex Areas Volumetric V&ID*
24590-BOF-M8-SDJ-00001	*BOF/EMF Buildings SDJ Plant Room V&ID Exhaust Stack Monitoring System*
HVAC System Design Calculations	
24590-BOF-M8C-ACV-00001	*Cooling and Heating Load Calculation for EMF C1 and C2 Areas*
24590-BOF-M8C-ACV-00002	*Cooling and Heating Load Calculation for EMF C3 and C5 Areas*
24590-BOF-M8C-ACV-00003	*DFLAW EMF Supply Fan, Exhaust Fan, and Transfer Duct Sizing*
24590-BOF-M8C-ACV-00004	*EMF ACV System Equipment Calculation*
24590-BOF-M8C-ACV-00005	*EMF ACV Exhaust Ductwork Pressure, Temperature and Ductwork Class Designation*
24590-BOF-MKC-ACV-00001	*DFLAW EMF ACV HEPA Filter Housing Design Pressures and Maximum Allowable Leakage*
HVAC System Equipment Datasheets	
24590-BOF-MAD-ACV-00001	*24590-BOF-MA-ACV-AHU-00001A/B – ACV Supply Air Handling Unit*
24590-BOF-MAD-ACV-00002	*Exhaust Fan/Blower for Active Ventilation System*
24590-BOF-MKD-ACV-00001	*24590-BOF-MK-ACV-HEPA-00001A-E - Primary Stage (Stage 1), Type 1 Filter Housings for BOF/EMF ACV Exhaust System*
Mechanical Handling Design Documents	
24590-WTP-M0-25-00001	*BOF/EMF Design Proposal Drawing Drain Vessel Monorail Hoist*
24590-WTP-M0D-25-00001	*24590-WTP-MJ-25-HST-00001 – BOF/EMF Monorails Maintenance Monorail Hoist*
24590-WTP-M0D-25-00002	*24590-WTP-MJ-25-HST-00002 – BOF/EMF Monorails Maintenance Monorail Hoist*
24590-WTP-M0D-25-00003	*24590-WTP-MJ-25-HST-00003 – BOF/EMF Monorails Maintenance Monorail Hoist*
24590-WTP-M0D-25-00004	*24590-WTP-MJ-25-HST-00004 – BOF/EMF Monorails Maintenance Monorail Hoist*
24590-WTP-M0D-25-00005	*24590-WTP-MJ-25-HST-00005 – BOF/EMF Monorails Maintenance Monorail Hoist*
24590-WTP-M0D-25-00006	*BOF/EMF Maintenance Monorail Hoist for Filter DEP-FILT-00003*
24590-WTP-M7-25-00001	*BOF/EMF Mechanical Handling Diagram Drain Vessel Monorail Hoist*

Document Number	Title
Electrical Single Line Diagrams	
24590-BOF-E1-MVE-00002	*Switchgear Building 13.8kV Switchgear MVE-SWGR-87001A & 87001B Single Line Diagram*
24590-BOF-E1-LVE-00010	*BOF/EMF Secondary Unit Substation LVE-LC-27001 Single Line Diagram*
24590-BOF-E1-LVE-00011	*BOF/EMF Motor Control Center LVE-MCC-27001A Single Line Diagram*
24590-BOF-E1-LVE-00012	*BOF/EMF Motor Control Center LVE-MCC-27001B Single Line Diagram*
24590-BOF-E1-LVE-00013	*BOF/EMF Motor Control Center LVE-MCC-27002A Single Line Diagram*
24590-BOF-E1-LVE-00014	*BOF/EMF Motor Control Center LVE-MCC-27002B Single Line Diagram*
24590-BOF-E1-LVE-00015	*BOF/EMF Motor Control Center LVE-MCC-27003A Single Line Diagram*
24590-BOF-E1-LVE-00016	*BOF/EMF Motor Control Center LVE-MCC-27003B Single Line Diagram*
24590-BOF-E1-UPE-00001	*BOF/EMF Uninterruptible Power Supply UPE-UPS-27001 Single Line Diagram*
Electrical Motor Control Center Schedules	
24590-BOF-EC-LVE-00001	*Motor Control Center Schedule LVE-MCC-27001A (EL 6 FT)*
24590-BOF-EC-LVE-00002	*Motor Control Center Schedule LVE-MCC-27001B (EL 6 FT)*
24590-BOF-EC-LVE-00003	*Motor Control Center Schedule LVE-MCC-27002A (EL 6 FT)*
24590-BOF-EC-LVE-00004	*Motor Control Center Schedule LVE-MCC-27002B (EL 6 FT)*
24590-BOF-EC-LVE-00005	*Motor Control Center Schedule LVE-MCC-27003A (EL 6 FT)*
24590-BOF-EC-LVE-00006	*Motor Control Center Schedule LVE-MCC-27003B (EL 6 FT)*
Electrical Panel Schedules and Load Lists	
24590-BOF-M8-LTE-25001	*BOF/EMF Process Building Lighting 480/277V Panel Schedule LTE-PNL-25001*
24590-BOF-M8-LTE-25002	*BOF/EMF Process Building Lighting 480/277V Panel Schedule LTE-PNL-25002*
24590-BOF-M8-LTE-26001	*BOF/EMF Utility Building Lighting 480/277V Panel Schedule LTE-PNL-26001*
24590-BOF-E8-LVE-00002	*BOF/EMF 480V Electrical Load List*
24590-BOF-E8-LVE-25001	*BOF/EMF Process Building 208/120V Power Distribution Panel Schedule LVE-PNL-25001*
24590-BOF-E8-LVE-25002	*BOF/EMF Process Building 208/120V Power Distribution Panel Schedule LVE-PNL-25002*
24590-BOF-E8-LVE-25003	*BOF/EMF Process Building 480V Electrical Distribution Panel Schedule LVE-PNL-25003*
24590-BOF-E8-LVE-26001	*BOF/EMF Utility Bldg. 208/120V Power Distribution Panel Schedule LVE-PNL-26001*
24590-BOF-E8-LVE-26002	*BOF/EMF Utility Bldg. 208/120V Power Distribution Panel Schedule LVE-PNL-26002*
24590-BOF-E8-LVE-27001	*BOF/EMF E-Power House 208/120V Power Distribution Panel Schedule LVE-PNL-27001*
24590-BOF-E8-LVE-27002	*BOF/EMF E-Power House 208/120V Power Distribution Panel Schedule LVE-PNL-27002*
24590-BOF-E8-LVE-27003	*BOF/EMF E-Power House 480V Electrical Distribution Panel Schedule LVE-PNL-27003*
24590-BOF-E8-UPE-25001	*BOF/EMF Process Building UPS Power 208/120V Panel Schedule UPE-PNL-25001*
24590-BOF-E8-UPE-26001	*BOF/EMF Utility Bldg. UPS Power 208/120V Panel Schedule UPE-PNL-26001*
24590-BOF-E8-UPE-27001	*BOF/EMF E-Power House UPS Power 208/120V Panel Schedule UPE-PNL-27001*

Document Number	Title
Corrosion Evaluations	
24590-BOF-N1D-DEP-00001	*DEP-VSL-00001 - Low Point Drain Vessel Corrosion Evaluation*
24590-BOF-N1D-DEP-00002	*DEP-VSL-00002 - Evaporator Feed Vessel Corrosion Evaluation*
24590-BOF-N1D-DEP-00003	*DEP-VSL-00003A/B/C - Evaporator Concentrate Vessels Corrosion Evaluation*
24590-BOF-N1D-DEP-00004	*DEP-VSL-00004A/B - Overhead Sampling Vessel Corrosion Evaluation*
24590-BOF-N1D-DEP-00005	*DEP-VSL-00005A/B - Process Condensate Lag Storage Vessel A & B*
24590-BOF-N1D-DEP-00006	*DEP-VSL-00008 - Reboiler Condensate Collection Vessel Corrosion Evaluation*
24590-BOF-N1D-DEP-00007	*Corrosion Evaluation DEP-COND-00001, 2, & 3 DEP Evaporator Primary Condenser, Inter-Condenser, and After-Condenser*
24590-BOF-N1D-DEP-00008	*Corrosion Evaluation DEP-HX-00001 Evaporator Concentrate/Feed LAW Effluent Cooler*
24590-BOF-N1D-DEP-00009	*DEP-RBLR-00001 - DEP Evaporator Reboiler Corrosion Evaluation*
24590-BOF-N1D-DEP-00010	*DEP-EVAP-00001 - Corrosion Evaluation DEP Evaporator Separator Vessel*
24590-BOF-N1D-DVP-00001	*Corrosion Evaluation DVP-EXHR-00001A/B Process Ventilation Exhauster*
24590-BOF-N1D-DVP-00002	*Corrosion Evaluation DVP-HTR-00001A/B Process Ventilation Preheaters*

Appendix A Test Objectives, Conditions, and Acceptance Criteria

Note: The testing activities included in this Appendix are limited to those identified as needing to be performed by Startup or Commissioning to support the verification of requirements in Section 3. This Appendix does not restrict Startup or Commissioning from performing other routine system functional testing or grooming.

Table A-1 EMF Facility Test Objectives, Conditions, and Acceptance Criteria

Requirement Section Number	Plan (including SSCs)	Acceptance Criteria (TAC or GTC)	Notes/Comments	Test Conditions
3.4.1.1.1	Perform a test to verify the capability to support the LAW Facility cold commissioning capacity testing criteria.	**(GTC)** The EMF supports the LAW Facility's minimum production rate in accordance with Table C.6-5.1 of the WTP Contract.	This test is expected to be met along with the LAW production requirement in the LAW FDD. The test will average two 5-day periods, with an additional 5 days if necessary to achieve the capacity defined in the WTP Contract. **Reference**: • 24590-LAW-3ZD-20-00002, App. A • WTP Contract Section C C.6 Standard 5(e)(3)(ii)	The EMF is operated continuously for two 5-day tests. All internal systems supporting effluent treatment are operational.
3.4.3.3.8	Perform a test to verify the leak detection capability of secondary containment equipment for the tank systems. **CTNs:** DEP-SUMP-00001, DEP-LT-8112 DEP-SUMP-00002A/B, DEP-LT-8626/8629 DEP-SUMP-00003A/B, DEP-LT-8646/8647 DEP-SUMP-00004A/B, DEP-LT-8632/8656 DEP-SUMP-00005A/B, DEP-LT-8638/8641 DEP-LDB-00001, DEP-LSH-8701 DEP-LDB-00002, DEP-LSH-8702 DEP-LDB-00003, DEP-LSH-8703 DEP-LDB-00004, DEP-LSH-8706 DEP-LDB-00005, DEP-LSH-8705 DEP-LDB-00006, DEP-LSH-8704 RLD-LDB-00012, RLD-LSH-1001 RLD-LDB-00013, RLD-LSH-1002	**(GTC)** Leak detection instrumentation successfully detects and announces leak of at least 0.1 gal/hour within 24 hours.	Leak detection equipment and instrumentation in the EMF is specified in Table 4G-4 of the DWP. This test is extended to RLD-LDB-00012/00013 on the LERF transfer line near the WTP site boundary. Although this equipment is associated with the PT Facility, it is essential for DFLAW operation. Additional allowance may be made for transmitter accuracy. **Reference**: • WA7890008967, Chapter 4G.20 • 24590-BOF-M6-DEP-00001002 • 24590-BOF-M6-DEP-00009001 • 24590-BOF-M6-DEP-00009002 • 24590-BOF-M6-DEP-00009004 • 24590-BOF-M6-DEP-00009005 • 24590-BOF-M6-DEP-00011001 • 24590-PTF-M6-PWD-00058002	PCJ system operating Fill each sump with a maximum 2.4 gallons of water. LERF transfer line leak detection boxes installed and operational.
3.4.5.4.1	Perform a test to verify the proper functioning of the access control system to meet security requirements.	**(GTC)** The EMF access control is done by computer-based data verification. Employee photo identification badges, capable of interfacing with the access control system, are used to uniquely identify each employee to gain authorized access.		CME system operating

Requirement Section Number	Plan (including SSCs)	Acceptance Criteria (TAC or GTC)	Notes/Comments	Test Conditions
3.4.5.5.10	Perform testing to verify that hoist brakes engage with a loss of power. **CTNs:** 25-HST-00001 25-HST-00002 25-HST-00003 25-HST-00004 25-HST-00005 25-HST-00006	**(GTC)** The hoist brakes engage for all degrees of motion when the power is isolated, as follows: • While the trolley is moving along the rail, disconnect or shut down power to the hoist and verify the brakes on all hoist functions engage. • While raising or lowering the hook on the hoist, disconnect or shut down power to the hoist and verify the brakes on all hoist functions engage.	Startup to determine method of power isolation for this testing.	LVE system operating The power isolation occurs in such a manner that the trolley/hoist is in motion at the time the isolation is performed.
3.4.5.5.16	Perform a test to verify the emergency stop capability to (a) report status to the appropriate control system, (b) stop equipment, and (c) remain in a shutdown state until the circuit is physically reset to prevent equipment restart while the dangerous condition exists. **CTNs:** TBD	**(GTC)** Upon engaging each emergency stop button, the equipment de-energizes and remains shut down until the circuit is reset. The emergency stop(s) report their status back to their respective control system.		LVE system operating. Each emergency stop is tested individually.
3.4.5.5.21	Perform noise level measurements to verify normal operating noise levels are minimized within EMF occupied plant spaces.	**(GTC)** Noise exposure levels are less than 109 dBA when all equipment is in operation.	Noise measurements are made by ES&H using M&TE. 109dBA is the American Conference of Governmental Industrial Hygienists limit for continuous occupancy with personal protective equipment (double hearing protection).	All equipment in the EMF operating in its normal configuration.
3.4.5.6.4	Perform a test to verify that the removal and replacement capabilities support replacement of necessary equipment in high radiation areas of the EMF. **CTNs**: 25-HST-00001 DEP-AGT-00001 DEP-PMP-00001A/B	**(GTC)** Equipment located in high radiation areas can be removed and replaced using provided lifting and handling capabilities.	Although the drain tank cell (ED-B001) is normally a R3 area, there are several scenarios where the area could reach R5 levels. The equipment associated with DEP-VSL-00001 that has the potential to fail during normal operations can be removed to a lower radiation area for contact maintenance.	

Table A-2 DEP System Test Objectives, Conditions, and Acceptance Criteria

Requirement Section Number	Plan (including SSCs)	Acceptance Criteria (TAC or GTC)	Notes/Comments	Test Conditions
3.5.1.1.1	Perform a test to verify the capability to support the LAW Facility cold commissioning capacity testing criteria.	**(GTC)** The DEP system supports the LAW Facility's minimum production rate in accordance with Table C.6-5.1 of the WTP Contract.	This test is expected to be met along with the LAW production requirement in the LAW FDD. The test will average two 5-day periods, with an additional 5 days if necessary to achieve the capacity defined in the WTP Contract. **Reference**: • 24590-LAW-3ZD-20-00002, App. A • WTP Contract Section C C.6 Standard 5(e)(3)(ii)	The DEP system is operated continuously for two 5-day tests. All DEP system equipment operating.
3.6.4.1.1	Perform a test to verify EMF sump pumps in DWP areas meet the minimum flow rates. **CTNs:** DEP-SUMP-00001, DEP-PMP-00031 DEP-SUMP-00002A/B, DEP-PMP-00032A/B DEP-SUMP-00003A/B, DEP-PMP-00033A/B DEP-SUMP-00004A/B, DEP-PMP-00034A/B DEP-SUMP-00005A/B, DEP-PMP-00035A/B	. **(GTC)** The DEP system sump pumps in DWP areas meet the following minimum transfer rates: • DEP-PMP-00031: 45 gpm • DEP-PMP-00032A/B: 120 gpm • DEP-PMP-00033A/B: 120 gpm • DEP-PMP-00034A/B: 120 gpm • DEP-PMP-00035A/B: 120 gpm	The determination of the flow rate may be direct measurement using installed or temporary instruments, or by the time to reduce the sump volume by a known or measured quantity. **Reference**: • 24590-BOF-M6-DEP-00001002 • 24590-BOF-M6-DEP-00009001 • 24590-BOF-M6-DEP-00009002 • 24590-BOF-M6-DEP-00009004 • 24590-BOF-M6-DEP-00009005 • 24590-BOF-M6C-DEP-00001 • WA7890008967, Table 4G-4	The DEP system vessel levels are below the high level setpoints to allow for sump transfers.
3.6.4.1.2	Perform a test to verify the ability to achieve the minimum volumetric flow rate necessary to achieve a transfer velocity greater than 4 ft/sec. **CTNs**: DEP-PMP-00003A/B DEP-PMP-00012A/B/C DEP-FI-8404	**(GTC)** The DEP system pumps meet the minimum flow rate necessary to achieve a transfer velocity greater than 4 ft/sec.	If the DFLAW conditioned effluent contains solids, the transfer velocity must be greater than 4 ft/sec. If the effluent does not contain solids and the specific gravity is less than 1.35 kg/L, the transfer does not have a minimum velocity to satisfy the ICD-31 requirements for waste transfers and this test is not required. **Reference**: • Section 2.7, 24590-WTP-ICD-MG-01-031 • 24590-BOF-M6-DEP-00002002 • 24590-BOF-M6-DEP-00002006 • 24590-BOF-M6-DEP-00005004	PCJ system operating normally.

Requirement Section Number	Plan (including SSCs)	Acceptance Criteria (TAC or GTC)	Notes/Comments	Test Conditions
3.15.1.2.1	Perform a test to verify that a permissive/shutdown signal is sent to Tank Farms to shutdown transfer in the event of leak detection (at minimum) by WTP. **CTNs**: DEP-LAH-8702	**(GTC)** Permissive/shutdown signal is sent to the Tank Farms Monitoring and Control System at the WTP site interface Node 13 to shutdown the waste feed upon detection of a leak by DEP-LAH-8702.	Leak detection is the minimum required interlock for interface with Tank Farms. However, other interlock inputs could include vessel levels, valve alignments, transfer times, and ventilation signals. **Reference**: • 24590-BOF-M6-DEP-00011001 • 24590-WTP-ICD-MG-01-030	PCJ system operating normally.
3.15.1.2.2	Perform a test to verify that the transfer process to the LAW Facility is shutdown to a fail-safe state when the permissive/shutdown signal is lost from WTP or from Tank Farms during transfer. **CTNs:** TBD	**(GTC)** Transfer process is shutdown to fail-safe state upon loss of permissive/shutdown signal from WTP or Tank Farms during transfer.	**Reference**: • 24590-WTP-ICD-MG-01-030	PCJ system operating normally.
3.15.1.2.3	Perform a test to verify waste feed transfer line and feed tank/receipt system monitoring information is provided to the Tank Farms Monitoring and Control System.	**(GTC)** Relevant feed transfer monitoring information is provided to the Tank Farms Monitoring and Control System at the WTP site interface Node 13.	**Reference**: • 24590-WTP-ICD-MG-01-030	PCJ system operating normally.
3.15.1.2.5	Perform a test to verify that valves in the DEP feed transfer piping divert flush water to the low point drain vessel upon detection of the end of feed transfer and the beginning of flushing. **CTNs:** DEP-FQSH-8677B DEP-YV-8682	**(GTC)** When the high flow setpoint of DEP-FQSH-8677B is reached, DEP-YV-8682 opens to divert flush water to DEP-VSL-00001.	**Reference**: • 24590-BOF-M6-DEP-00010001 • 24590-WTP-ICD-MG-01-030	PCJ system operating normally.
3.15.1.2.6	Perform a test to verify that batch transfers of the TOC waste feed are stopped upon detection of radiation levels that exceed the limits for the LAW Facility. **CTNs**: DEP-RI-8676	**(GTC)** Waste feed is terminated upon detection of high radiation levels by DEP-RI-8676.	**Reference**: • 24590-BOF-M6-DEP-00010001 • 24590-WTP-ICD-MG-01-030	PCJ system operating normally.
3.15.1.3.1	Perform a test to verify that a DEP system permissive/shutdown signal shuts down transfer of evaporator concentrate/feed to Tank Farms in the event of leak detection. **CTNs:** DEP-LAH-8701	**(GTC)** Permissive/shutdown signal shuts down transfer of waste from the DEP system to Tank Farms upon leak detection alarm DEP-LAH-8701.	**Reference**: • 24590-BOF-M6-DEP-00011001 • 24590-WTP-ICD-MG-01-031	PCJ system operating normally.
3.15.1.3.2	Perform a test to verify that the transfer process is shutdown to a fail-safe state when the permissive/shutdown signal is lost from WTP or from Tank Farms during the transfer of evaporator concentrate/feed to Tank Farms. **CTNs:** TBD	**(GTC)** Transfer process is shutdown to fail-safe state upon loss of permissive/shutdown signal from WTP or Tank Farms during transfer.	**Reference**: • 24590-WTP-ICD-MG-01-031	PCJ system operating normally.
3.15.1.3.3	Perform a test to verify that monitoring information for the evaporator concentrate/feed return line to Tank Farms is provided to the Tank Farms Monitoring and Control System.	**(GTC)** Relevant evaporator concentrate/feed return transfer monitoring information is provided to the Tank Farms Monitoring and Control System.	**Reference**: • 24590-WTP-ICD-MG-01-031	PCJ system operating normally.

Requirement Section Number	Plan (including SSCs)	Acceptance Criteria (TAC or GTC)	Notes/Comments	Test Conditions
3.15.1.4.1	Perform a test to verify the stop control function as intended upon an alarm of either the leak detection system on the WTP portion of the LERF/ETF transfer line or an alarm on the LERF/ETF leak detection or control system. **CTNs:** RLD-LSH-1001 RLD-LSH-1002	**(GTC)** The transfer of dilute effluent to LERF/ETF is terminated upon detection of a leak in the WTP portion of the LERF/ETF transfer line by RLD-LSH-1001/1002 or an alarm on the LERF/ETF leak detection or control system.	This test is extended to RLD-LDB-00012/00013 on the LERF transfer line near the WTP site boundary. Although this equipment is associated with the PT Facility, it is essential for DFLAW operation. **Reference**: • 24590-PTF-M6-PWD-00058002 • 24590-WTP-ICD-MG-01-006	PCJ system operating normally.
3.15.1.4.2	Perform a test to verify that relevant, real-time effluent monitoring information (including dilute effluent flow rate, radiation, pH, and conductivity) is provided at the required frequency over a dedicated line to the LERF Instrument Building (242AL-71). **CTNs:** DEP-FI-8475 DEP-RI-8476 DEP-CI-8477 DEP-AI-8478	**(GTC)** Relevant dilute effluent transfer monitoring information is provided over a dedicated line to the LERF Instrument Building at the required frequency.	**Reference**: • 24590-BOF-M6-DEP-00006003 • 24590-WTP-ICD-MG-01-006	PCJ system operating normally.
3.15.1.4.3	Perform a test to verify that secure data signals from the EMF are received at the interface point for LERF/ETF-related transfers.	**(GTC)** Secure data signals from the EMF are received at interface Node 18 of the WTP site.	**Reference**: • 24590-WTP-ICD-MG-01-006	PCJ system operating normally.

Table A-3 HVAC (ACV, DVP) System Test Objectives, Conditions, and Acceptance Criteria

Requirement Section Number	Plan (including SSCs)	Acceptance Criteria (TAC or GTC)	Notes/Comments	Test Conditions
3.8.1.1.1	Perform differential pressure measurements to verify airflow direction at the following contamination zone boundaries: • ED-0101 (C2) to ED-0102 (C3) at door TBD • ED-0102 (C3) to ED-B001 (C5) at door ED-0102-4 • E-0101 (C2) to E-0102 (C3) at door E-0101-1 • E-0101 (C2) to E-0102 (C3) at door E-0101-3 • E-0101 (C2) to E-0102 (C3) at door E-0101-4 • E-0102 (C3) to E-0103 (C5) at door E-0102-2 • E-0102 (C3) to E-0103 (C5) at door E-0102-3 • E-0104 (C2/C3) to E-0103 (C5) at door E-0104-2 • EU-0101 (C1) to EU-0102 (C2) at door EU-0102-1 • EU-0101 (C1) to EU-0102 (C2) at door EU-0102-2	**(GTC)** Airflow direction is from areas of low or no potential for contamination to areas of higher potential for contamination, as follows: • C2 areas are at a negative pressure with respect to C1 areas • C3 areas are at a negative pressure with respect to C2 or C2/C3 areas • C5 areas are at a negative pressure with respect to C2/C3 and C3 areas	Testing to be performed as part of the overall EMF HVAC system test. **Reference**: • 24590-BOF-A1-25-01201001 • 24590-BOF-A1-25-01201002 • 24590-BOF-A1-25-01201003 • 24590-BOF-A1-26-00001	Initial building balance complete. All ventilation systems running normally. Doors in airflow path are closed.
3.11.1.5.2	Perform a discharge stack traverse with a pitot tube to verify that the velocity profile of the ACV system exhaust duct meets the acceptance criteria.	**(GTC)** The average cross-sectional air velocity of the stack, as determined by the traverse measurements, is at least 2,000 fpm. .	Notify results to the WDOH in accordance with air permit requirements. The test ports are shown on 24590-BOF-M8-SDJ-00001.	Final building balance complete. All ventilation systems running normally with active controls, at the design airflow rate ±10%.
3.13.1.4	Perform a test to verify that the sequence to start and stop ACV fan systems functions as designed to maintain cascade airflow during startup/shutdown. • While ACV-FAN-00001A/B and ACV-AHU-00001A/B not running, attempt to start ACV-AHU-00001A and ACV-AHU-00001B and verify that the units are unable to start due to a lack of the start permissive. • While ACV-FAN-00001A/B and ACV-AHU-00001A/B are running, stop both ACV-FAN-00001A and ACV-FAN-00001B and verify that both ACV-AHU-00001A and ACV-AHU-00001B shut down. **CTNs:** ACV-AHU-00001A/B ACV-FAN-00001A/B	**(GTC)** • The AHUs do not start without an operating exhaust fan • The AHUs shut down instantaneously and in sequence upon simulated loss of the exhaust fans.	**Reference**: • 24590-BOF-M8-ACV-00001007, Note 5	Final building balance complete. All ventilation systems operating normally.
3.13.4.2	Perform a test to verify that the fan auto-changeover interlock functions correctly. • Select ACV-AHU-00001A as the running unit using ACV-HS-8112 and start the AHU. Trip ACV-AHU-00001A and verify that ACV-AHU-00001B automatically starts. Repeat the test with ACV-AHU-00001B selected as the running unit. • Select ACV-FAN-00001A as the running unit using ACV-HS-8161 and start the exhaust fan. Trip ACV-FAN-00001A and verify that ACV-FAN-00001B automatically starts. Repeat the test with ACV-FAN-00001B selected as the running unit. • Select DVP-EXHR-00001A as the running unit using DVP-HS-8105 and start the exhauster. Trip DVP-EXHR-00001A and verify that DVP-EXHR-00001B automatically starts. Repeat the test with DVP-EXHR-00001B selected as the running unit. **CTNs:** ACV-AHU-00001A/B, ACV-HS-8112 ACV-FAN-00001A/B, ACV-HS-8161 DVP-EXHR-00001A/B, DVP-HS-8105	**(GTC)** Upon failure of an operational fan, the standby fan unit automatically starts. The cascade trip interlock is not initiated during the switchover	Reference: • 24590-BOF-M8-ACV-00001001 • 24590-BOF-M8-ACV-00001007, Note 4 • 24590-BOF-M6-DVP-00001001, Note 5	Initial building balance complete. All ventilation systems operating normally.

Appendix B Descriptions of Functional Flow and Interactions

B.1 Descriptions of the DEP System Functional Flow and Interactions

Function: A.1	**Convey Treated Low-Activity Waste Feed to LAW Facility**
Detailed description: Treated low-activity waste feed is conveyed to LAW Facility via an underground transfer line that is within the DEP system scope (ICD-30). After the feed transfer, a forward flush of the waste feed transfer line from the TOC to LAW is performed. The DEP system includes instrumentation to detect the end of the feed transfer and beginning of the flush sequence. Upon detection, the LAW Facility transfer valves are closed and the TOC stream is diverted to the low point drain vessel. After flushing, the waste transfer line is drained to the low-point drain vessel.	
Initiation: This function is initiated by the TOC control room operator when a source of primary effluent is ready to transfer, and a receiving vessel is available. Effluent is directed to the receiving vessel through DEP underground piping.	
Termination: This function terminates when indication is provided that the batch transfer volume is complete or the receiving vessel is at high operating volume.	
Parallel or sequential functions: N/A	
Applicable Modes: Normal and abnormal operations.	

Function: A.2	**Sequence LAW Facility Feed**
Detailed description: The sequenced LAW Facility feed transfer system is designed to first transfer TLAW from the TOC, followed by evaporator concentrate from the DEP system, with the feed pushed into the LCP system receipt vessels by flush water from the TOC.	
Initiation: This function is initiated by the TOC control room operator when a source of primary effluent is ready to transfer, and a receiving vessel is available. Effluent is directed to the receiving vessel through DEP underground piping.	
Termination: This function terminates when indication is provided that the batch transfer volume is complete or the receiving vessel is at high operating volume.	
Parallel or sequential functions: N/A	
Applicable Modes: Normal and abnormal operations.	

Function: A.3	**Receive and Filter Liquid Effluent**
Detailed description: The DEP system receives and filters batch RLD effluent from LAW and Lab and any miscellaneous liquid, leaks, spills, or washdown collected within the DEP system. Effluent passes through DEP-FILT-00003 before collecting in DEP-VSL-00002.	
Initiation: This transfer function is initiated by the LAW Facility or Lab operator for transfer of RLD effluent. This transfer function initiates upon collection of any miscellaneous liquids or leaks/spills within the DEP system.	
Termination: This transfer function is terminated by the operator when the batch is complete and has passed through the prefilter into the receiving vessel, or there is a low operating volume in the sending vessel or there is a high operating volume in the receiving vessel. This function terminates upon receipt of any miscellaneous liquids or leaks/spills within the DEP system.	
Parallel or sequential functions: N/A	
Applicable Modes: Normal and abnormal operations.	

Function: A.4	**Concentrate Effluent**
Detailed description: Effluent is continuously fed to the DEP system evaporator system from DEP-VSL-00002 using DEP-PMP-00002A/B to concentrate the waste received from the LAW and Lab RLD systems. The evaporator operates under vacuum conditions to reduce boiling temperatures, in order to minimize fouling. The feed is introduced to the recirculation loop of the evaporator which includes a reboiler unit that functions to heat the effluent using steam from the HPS system. Heated liquor from the reboiler enters the evaporator below the liquid surface and flashes as it rises, due to the temperature gradient in the liquid, and becomes vapor.	
Initiation: This transfer function is initiated by the operator when feed is available.	
Termination: This transfer function is terminated by the control logic when feed is depleted.	
Parallel or sequential functions: All	
Applicable Modes: Normal and abnormal operations.	

Function: A.5.1	**Accumulate Concentrated Effluent**
Detailed description: The concentrate in the bottom of the evaporator is recirculated through DEP-PMP-00007A/B and monitored at DEP-SKID-00005 to determine whether it meets the LAW Facility feed acceptance criteria. Once the specific gravity meets the pre-established target for the feed type, a small portion of the concentrate is bled off of the recirculation loop and collects in DEP-VSL-00003A/B/C. The rate of transfer to the collection vessels is modulated to maintain the specific gravity of the evaporator effluent.	
Initiation: This transfer function is initiated by the operator.	
Termination: This transfer function is terminated by the operator.	
Parallel or sequential functions: All	
Applicable Modes: Normal and abnormal operations.	

Function: A.5.2	**Accumulate Dilute Effluent**
Detailed description: The vapor produced in the evaporator passes through a bubble cap tray and mesh pads to return condensable vapors back to the process and remove any remaining aerosols and particulates. The vapor then enters DEP-COND-00001 to condense the process vapors using cooling water from the PCW system. The condensate is transferred to DEP-VSL-00004A/B via DEP-PMP-00006A/B for collection. Caustic scrubber effluent transferred from the LVP system also collects in these vessels.	
Initiation: This transfer function is initiated by the operator.	
Termination: This transfer function is terminated by the operator.	
Parallel or sequential functions: All	
Applicable Modes: Normal and abnormal operations.	

Function: A.6.1	**Mix and Sample Concentrated Effluent**
Detailed description: Concentrated effluent is mixed using the DEP-VSL-00003A/B/C recirculation loop and eductors and sampled at DEP-HOOD-00001. The sample provides confirmation that the concentrate meets the Tank Farms' DST EAC or is used as input to the LAW Facility glass former addition.	
Initiation: This transfer function is initiated by the operator.	
Termination: This transfer function is terminated by the operator.	
Parallel or sequential functions: All	
Applicable Modes: Normal and abnormal operations.	

Function: A.6.2	**Mix and Sample Dilute Effluent**
Detailed description: Dilute effluent is mixed using the DEP-VSL-00004A/B recirculation loop and eductors and sampled at DEP-HOOD-00001. The sample provides confirmation that the diluted effluent meets the LERF/ETF EAC.	
Initiation: This transfer function is initiated by the operator.	
Termination: This transfer function is terminated by the operator.	
Parallel or sequential functions: All	
Applicable Modes: Normal and abnormal operations.	

Function: A.7.1	**Store Concentrated Effluent**
Detailed description: The DEP system provides a minimum of 48 hours of storage capacity for evaporator concentrate in DEP-VSL-00003A/B/C prior to transfer to the LAW Facility.	
Initiation: This transfer function is initiated by the operator.	
Termination: This transfer function is terminated by the operator.	
Parallel or sequential functions: All	
Applicable Modes: Normal and abnormal operations.	

Function: A.7.2	**Store Dilute Effluent**
Detailed description: The DEP system provides a minimum of 48 hours of storage capacity for evaporator condensate in DEP-VSL-00005A/B prior to transfer to LERF/ETF.	
Initiation: This transfer function is initiated by the operator.	
Termination: This transfer function is terminated by the operator.	
Parallel or sequential functions: All	
Applicable Modes: Normal and abnormal operations.	

Function: A.8.1	**Transfer Concentrated Effluent**
Detailed description: The DEP system includes the ability to transfer concentrate effluent to the LAW LCP system during normal operations, to Tank Farms' DSTs when the LAW Facility is unavailable for transfers, or to a tanker truck (following an ALARA, viability, and safety study). DEP-PMP-00003A/B provide the motive force to transfer the concentrate.	
Initiation: This transfer function is initiated by the operator.	
Termination: This transfer function can be terminated manually by the operator or automatically by the flow measurement equipment.	
Parallel or sequential functions: All	
Applicable Modes: Normal and abnormal operations.	

Function: A.8.2	**Transfer Dilute Effluent**
Detailed description: The DEP system includes the ability transfer dilute effluent to LERF/ETF using DEP-PMP-00005A/B.	
Initiation: This transfer function is initiated by the operator.	
Termination: This transfer function filters dilute effluent prior to receipt at LERF/ETF and can be terminated manually by the operator or automatically by the flow measurement equipment.	
Parallel or sequential functions: All	
Applicable Modes: Normal and abnormal operations.	

Function: B.1	**Chemically Adjust Effluent**
Detailed description: Sodium hydroxide and sodium nitrite are used to adjust the feed and concentrated effluent to allow for transfers to Tank Farms or the LAW LCP system.	
Initiation: This function is initiated by the operator using manual handswitches in conjunction with the SHR and SNR systems.	
Termination: This function terminates when the chemical reagent transfer setpoints are met or the effluent transfer ends.	
Parallel or sequential functions: All	
Applicable Modes: Normal and abnormal operations.	

Function: B.2	**Add Antifoam Reagent**
Detailed description: Antifoam reagent is transferred to the evaporator separator vessel to reduce foam generation while operating.	
Initiation: This transfer function is initiated by the operator.	
Termination: This transfer function can be terminated manually by the operator or automatically by the flow measurement equipment.	
Parallel or sequential functions: All	
Applicable Modes: Normal and abnormal operations.	

Function: B.3	**Bypass Evaporator**
Detailed description: The DEP system includes a flow path to bypass the evaporator and transfer feed back to Tank Farms. DEP-VSL-00002 effluent is transferred to mixing tees using DEP-PMP-000012A/B/C where the effluent is chemically adjusted to meet the acceptance criteria of ICD-31.	
Initiation: This transfer function is initiated by the operator.	
Termination: This transfer function is terminated by the operator.	
Parallel or sequential functions: All	
Applicable Modes: Normal and abnormal operations.	

Function: C.1	**Provide Low Point Drain Collection**
Detailed description: A collection vessel is provided to collect liquid from transfer line flushes and overflow collection. This collects the drains and flushes from within the DEP system, handles the TOC transfer line drains, and ensures any overflows/leaks to sumps are not transferred to a leaking vessel.	
Initiation: This function is always active.	
Termination: This function is should never terminate.	
Parallel or sequential functions: All	
Applicable Modes: Normal and abnormal operations.	

Function: C.2	**Return Overflows to the Process**
Detailed description: Overflows, spills, leaks, and drains that have collected in DEP-VSL-00001 and various sumps serving a secondary containment function are sampled and returned to the evaporator for processing.	
Initiation: This function is always active.	
Termination: This function is should never terminate.	
Parallel or sequential functions: All	
Applicable Modes: Normal and abnormal operations.	

Function: C.3.1	**Provide Leak Detection**
Detail description: DWP units serving a secondary containment function are provided with level sensors and switches used to detect leaks and notify the operator.	
Initiation: This function is always active.	
Termination: This function is should never terminate.	
Parallel or sequential functions: All	
Applicable Modes: Normal and abnormal operations.	

Function: C.3.2	**Transfer Sump Contents**
Detailed description: Sumps serving a secondary containment function have provisions to empty the sump contents within 24 hours or in as timely a manner as possible, as required by the DWP.	
Initiation: This function is always active.	
Termination: This function is should never terminate.	
Parallel or sequential functions: All	
Applicable Modes: Normal and abnormal operations.	

Function: D.1	**Flush System Equipment**
Detailed description: The DEP system has the capability to flush all transfer lines, including pumps, to limit the buildup of solids that could lead to plugging. The system also includes the capability to wash and flush vessels to support maintenance and decommissioning. Water is provided from the DIW and PSW systems, depending on the application.	
Initiation: This function is initiated by the LAW/DEP operator.	
Termination: This function can be terminated manually by the LAW/DEP operator or automatically by the flow measurement equipment.	
Parallel or sequential functions: All	
Applicable Modes: Normal and abnormal operations.	

Function: D.2	**Ventilate Vessel Headspace**
Detailed description: The DEP system interfaces with the DVP system to purge hydrogen from the headspace of the process vessels.	
Initiation: This function is always active.	
Termination: This function is should never terminate.	
Parallel or sequential functions: All	
Applicable Modes: Normal and abnormal operations.	

Function: D.3	**Ventilate Fume Hood**
Detailed description: The DEP system interfaces with the ACV system to provide an exhaust path for the air contained within the fume hood space of DEP-HOOD-00001.	
Initiation: This function is always active.	
Termination: This function is should never terminate.	
Parallel or sequential functions: All	
Applicable Modes: Normal and abnormal operations.	

Function: E.1	**Monitor and Control Waste Transfers**
Detailed description: The DEP system interfaces with the PCJ system and the Tank Farms Monitoring and Control system to regulate the transfers of feed, concentrate, and dilute effluent exchanged between WTP and Tank Farms, in accordance with the requirements of ICD-06, ICD-30, and ICD-31.	
Initiation: This function is automatically initiated.	
Termination: This function is automatically terminated.	
Parallel or sequential functions: All	
Applicable Modes: Normal and abnormal operations.	

Function: E.1.1	**Align DFLAW Configuration**
Detailed description: Provide the capability to allow the LAW Facility to receive treated feed directly from the TOC or from the PTF, and to disposition LAW and Lab effluents in the DEP system or return to the PTF for treatment and recycle.	
Initiation: N/A	
Termination: N/A	
Parallel or sequential functions: N/A	
Applicable Modes: N/A	

Function: E.2	**Provide Non-safety Monitoring and Control Functions**
Detailed description: Monitoring and control functions for DEP system process equipment at the EMF is accomplished through the PCJ system.	
Initiation: This function is automatically initiated.	
Termination: This function is automatically terminated.	
Parallel or sequential functions: All	
Applicable Modes: Normal and abnormal operations.	

Function: F.1	**Receive Low-Voltage Power**
Detailed description: Low-voltage power for all DEP system equipment is provided by the LVE system.	
Initiation: This function is always active.	
Termination: This function should never terminate.	
Parallel or sequential functions: All	
Applicable Modes: Normal and abnormal operations.	

Function: F.2	**Receive Uninterruptible Power**
Detailed description: Uninterruptible power for DEP-SKID-00005 monitoring and control equipment is provided by the UPE system.	
Initiation: This function is always active.	
Termination: This function should never terminate.	
Parallel or sequential functions: All	
Applicable Modes: Normal and abnormal operations.	

Function: F.3	**Receive Instrument Air**
Detailed description: Dry, clean, pressurized air from the ISA system is provided to DEP system pneumatic valves and instruments.	
Initiation: This function is always active.	
Termination: This function should never terminate.	
Parallel or sequential functions: All	
Applicable Modes: Normal and abnormal operations.	

Function: F.4	**Receive Plant Service Air**
Detailed description: Dry, pressurized air from the PSA system is used for the evaporator feed filter, the low-point drain area sump pump, and stations for hose connections.	
Initiation: This function is always active.	
Termination: This function should never terminate.	
Parallel or sequential functions: All	
Applicable Modes: Normal and abnormal operations.	

Function: G.1	**Protect Electrical Equipment**
Detailed description: The GRE system provides grounding/lightning control functions for DEP system electrical equipment in the LAW effluent process and drain tank buildings. The GRE system also provides a ground path in the event of an equipment fault or system short circuit.	
Initiation: This function is always active.	
Termination: This function should never terminate.	
Parallel or sequential functions: This function runs in parallel with all other functions.	
Applicable Modes: Normal and abnormal operations.	

Function: G.2	**Protect Outdoor Piping**
Detailed description: The HTE system provides heat tracing on DEP system outdoor piping to maintain minimum process temperatures. Underground waste transfer lines are buried a minimum 3 ft deep and are insulated for freeze protection.	
Initiation: This function is always active.	
Termination: This function should never terminate.	
Parallel or sequential functions: This function runs in parallel with all other functions.	
Applicable Modes: Normal and abnormal operations.	

B.2 Descriptions of the C1V System Functional Flow and Interactions

Function: A.1	**Draw Air**
Detailed description: Outdoor air is drawn at a rate to maintain the internal design conditions within the LAW effluent electrical building and other C1 areas of the EMF that are not supplied by the ACV system.	
Initiation: This function initiates when a temperature, pressure, or humidity monitor reaches one of its setpoints.	
Termination: This function terminates when all temperature, pressure, or humidity monitors are within their setpoint ranges.	
Parallel or sequential functions: Air heating, humidifying, and cooling are all performed simultaneously with drawing of the air.	
Applicable Modes: Normal and abnormal operations.	

Function: B.1	**Heat Air**
Detailed description: Outdoor air is heated as necessary to maintain required temperatures in C1 areas of the EMF that are served by the C1V system.	
Initiation: This function initiates when a temperature monitor is below its setpoint limit.	
Termination: This function terminates when all temperature monitors are above their minimum setpoints.	
Parallel or sequential functions: Air heating, humidifying, and cooling are all performed simultaneously with drawing of the air.	
Applicable Modes: Normal and abnormal operations.	

Function: B.2	**Humidify Air**
Detailed description: Outdoor air is humidified as necessary to maintain humidity requirements in C1 areas of the EMF that are served by the C1V system.	
Initiation: This function initiates when a humidity monitor is below its setpoint limit.	
Termination: This function terminates when all humidity monitors are above their minimum setpoints.	
Parallel or sequential functions: Air heating, humidifying, and cooling are all performed simultaneously with drawing of the air.	
Applicable Modes: Normal and abnormal operations.	

Function: B.3	**Cool Air**
Detailed description: Outdoor air is cooled as necessary to maintain required temperatures in C1 areas of the EMF that are served by the C1V system.	
Initiation: This function initiates when a temperature monitor is above its setpoint limit.	
Termination: This function terminates when all temperature monitors are below their setpoints.	
Parallel or sequential functions: Air heating, humidifying, and cooling are all performed simultaneously with drawing of the air.	
Applicable Modes: Normal and abnormal operations.	

Function: C.1	**Distribute to Electrical Area**
Detailed description: Conditioned air is provided to the electrical areas within the LAW effluent electrical building by the C1V system.	
Initiation: This function initiates upon drawing and conditioning air.	
Termination: This function terminates upon termination of drawing and conditioning air.	
Parallel or sequential functions: This function happens sequentially between conditioning of air and exhausting air.	
Applicable Modes: Normal and abnormal operations.	

Function: C.2	**Distribute to Control and Battery Areas**
Detailed description: Conditioned air is provided to the control and battery areas within the LAW effluent electrical building by the C1V system.	
Initiation: This function initiates upon drawing and conditioning air.	
Termination: This function terminates upon termination of drawing and conditioning air.	
Parallel or sequential functions: This function happens sequentially between conditioning of air and exhausting air.	
Applicable Modes: Normal and abnormal operations.	

Function: C.3	**Distribute to Other C1 Areas**
Detailed description: Conditioned air is provided to the AFR skid room, C&I room, drain tank chase, and the various fire riser rooms by the C1V system.	
Initiation: This function initiates upon drawing and conditioning air.	
Termination: This function terminates upon termination of drawing and conditioning air.	
Parallel or sequential functions: This function happens after the conditioning of air.	
Applicable Modes: Normal and abnormal operations.	

Function: D.1	**Exhaust Battery Room Air**
Detailed description: Air is exhausted to the atmosphere from the battery room by a C1V exhaust fan to prevent hydrogen accumulation. UPE system power is available upon a loss of normal power.	
Initiation: This function initiates after air has passed through the respective confinement areas.	
Termination: This function terminates whenever the confinement areas do not require any additional conditioning or ventilation.	
Parallel or sequential functions: This is the final function of the C1V system within the LAW effluent electrical building.	
Applicable Modes: Normal and abnormal operations.	

Function: E.1	**Receive Low-Voltage Power**
Detailed description: Low voltage power is provided by the LVE system to support the electricity needs of all functions within the C1V system.	
Initiation: This function is always active.	
Termination: This function should never terminate.	
Parallel or sequential functions: This function runs in parallel with all other functions.	
Applicable Modes: Normal and abnormal operations.	

Function: F.1	**Protect Equipment**
Detailed description: The GRE provides grounding/lightning control functions for C1V system equipment. The GRE system also provides a ground path in the event of an equipment fault or system short circuit.	
Initiation: This function is always active.	
Termination: This function should never terminate.	
Parallel or sequential functions: This function runs in parallel with all other functions.	
Applicable Modes: Normal and abnormal operations.	

B.3 Descriptions of the ACV and DVP System Functional Flow and Interactions

Function: A.1	**Draw Air**
Detailed description: Outdoor (atmospheric) air is drawn into ACV-AHU-00001A/B to maintain the internal design conditions within the process and utility areas of the LAW effluent process building, LAW effluent drain tank building, and LAW effluent utility building.	
Initiation: This function initiates when a temperature, pressure, or humidity monitor reaches one of its setpoints.	
Termination: This function terminates when all temperature, pressure, or humidity monitors are within their setpoint ranges.	
Parallel or sequential functions: Air heating, humidifying, and cooling are all performed simultaneously with drawing of the air into the ACV supply system.	
Applicable Modes: Normal and abnormal operations.	

Function: B.1	**Heat Air**
Detailed description: Air is heated in the ACV-AHU-00001A/B preheat and reheat steam coils using low pressure steam from the LPS system to maintain minimum temperature requirements. Condensate is collected and returned to the BOF-SCW system. Unit heaters are provided in areas where the AHU outlet temperature does not meet the minimum required temperature of the room.	
Initiation: This function initiates when a temperature monitor is below its setpoint limit.	
Termination: This function terminates when all temperature monitors are above their minimum setpoints.	
Parallel or sequential functions: Air heating, humidifying, and cooling are all performed simultaneously with drawing of the air into the ACV supply system.	
Applicable Modes: Normal and abnormal operations.	

Function: B.2	**Humidify Air**
Detailed description: Water is provided by the DOW system to the evaporative cooling portion of ACV-AHU-00001A/B to maintain minimum humidity requirements.	
Initiation: This function initiates when a humidity monitor is below its setpoint limit.	
Termination: This function terminates when all humidity monitors are above their minimum setpoints.	
Parallel or sequential functions: Air heating, humidifying, and cooling are all performed simultaneously with drawing of the air into the ACV supply system.	
Applicable Modes: Normal and abnormal operations.	

Function: B.3	**Cool Air**
Detailed description: Water from the DOW system is provided to the evaporative cooling portion of ACV-AHU-00001A/B to cool air within the ACV supply system whenever necessary to maintain temperatures below maximum limits. Condensate is discharged to the ground.	
Initiation: This function initiates when a temperature monitor is above its setpoint limit.	
Termination: This function terminates when all temperature monitors are below their setpoints.	
Parallel or sequential functions: Air heating, humidifying, and cooling are all performed simultaneously with drawing of the air into the ACV supply system.	
Applicable Modes: Normal and abnormal operations.	

Function: C.1	**Distribute Air**
Detailed description: Air is distributed directly to select C1, C2, and C3 areas within the LAW Effluent Process, Drain Tank and Utility Buildings. Air is cascaded from areas with lower potential for contamination to areas with higher potential for contamination before being exhausted by the ACV exhaust system.	
Initiation: This function initiates upon drawing and conditioning air.	
Termination: This function terminates upon termination of drawing and conditioning air.	
Parallel or sequential functions: This function happens sequentially between conditioning of air and exhausting air.	
Applicable Modes: Normal and abnormal operations.	

Function: C.2	**Ventilate Process Vessels**
Detailed description: The DEP system process vessels are ventilated by the DVP system to prevent the accumulation of hydrogen gas in the vessel headspace. Vessel vent off-gas is vented to the vessel vent header in the DVP system.	
Initiation: This function is initiated upon initiation of DVP exhaust fan operation.	
Termination: This function terminates upon termination of DVP exhaust fan operation.	
Parallel or sequential functions: This function happens sequentially between the drawing of purge air and exhausting vessel off-gas.	
Applicable Modes: Normal and abnormal operations.	

Function: D.1	**Filter Building Air**
Detailed description: In order to minimize contamination release, ACV system exhaust air is passed through vendor-packaged HEPA filter banks. The ACV system is provided with a standby filter bank to allow for filter changing without interrupting the system process.	
Initiation: This function initiates upon initiation of ACV exhaust fan operation.	
Termination: This function terminates upon termination of ACV exhaust fan operation.	
Parallel or sequential functions: This function happens sequentially between providing conditioned air to the LAW Effluent Process Drain Tank, and Utility Buildings and exhausting the air via the ACV exhaust system.	
Applicable Modes: Normal and abnormal operations.	

Function: D.2	**Filter Vessel Off-Gas**
Detailed description: DVP system vessel vent off-gas is collected, passed through preheaters, and then filtered through vendor-packaged HEPA filter banks independent of the ACV exhaust system.	
Initiation: This function initiates after air has passed through the DEP system vessels.	
Termination: This function terminates whenever the vessels do not require any additional ventilation.	
Parallel or sequential functions: This function occurs after ventilating the process vessels.	
Applicable Modes: Normal and abnormal operations.	

Function: E.1	**Exhaust Air**
Detailed description: After the exhaust air passes through the ACV and DVP HEPA filters, it is exhausted through a combined EMF stack using ACV-FAN-00001A/B and DVP-EXHR-00001A/B.	
Initiation: This function initiates after air has passed through the respective confinement areas.	
Termination: This function terminates whenever the confinement areas do not require any additional ventilation.	
Parallel or sequential functions: This is the final function of the ACV and DVP system.	
Applicable Modes: Normal and abnormal operations.	

Function: F.1	**Provide Non-Safety Monitoring & Control**
Detailed description: PCJ provides non-safety monitoring and control functions for ACV and DVP system equipment. Temperatures, pressures, and humidity for the ACV system are monitored and controlled. Temperatures, pressure, and flow for the DVP system are monitored and controlled.	
Initiation: This function is always active.	
Termination: This function should never terminate.	
Parallel or sequential functions: This function runs in parallel with all other functions.	
Applicable Modes: Normal and abnormal operations.	

Function: F.2	**Monitor Emissions**
Detailed description: The ACV and DVP systems interface with the SDJ system to monitor the stack emissions. This interface has no active function, that is, it does not automatically actuate or cause actuation of other devices to place facility equipment in a predetermined state.	
Initiation: This function is always active.	
Termination: This function should never terminate.	
Parallel or sequential functions: This function runs in parallel with all other functions.	
Applicable Modes: Normal and abnormal operations.	

Function: G.1	**Receive Non-safety Power**
Detailed description: Low voltage power is provided by the LVE system to support the electricity needs of all functions within the ACV and DVP systems.	
Initiation: This function is always active.	
Termination: This function should never terminate.	
Parallel or sequential functions: This function runs in parallel with all other functions.	
Applicable Modes: Normal and abnormal operations.	

Function: G.2	**Receive Uninterruptible Power**
Detailed description: Uninterruptible power (UPE) provides power for monitoring and limited control of select SSCs in the event of loss of offsite power.	
Initiation: This function is always active.	
Termination: This function should never terminate.	
Parallel or sequential functions: This function runs in parallel with all other functions.	
Applicable Modes: Normal and abnormal operations.	

Function: G.3	**Receive Instrument Air**
Detailed description: The ACV and DVP systems receive instrument air from the ISA system for the remote operation of pneumatic valves and dampers.	
Initiation: This function is always active.	
Termination: This function should never terminate.	
Parallel or sequential functions: This function runs in parallel with all other functions.	
Applicable Modes: Normal and abnormal operations.	

Function: G.4	**Flush System Equipment**
Detailed description: The DVP system receives water from the DIW system to support maintenance activities. A flush connection is included on the vessel vent header at DVP-V-00058.	
Initiation: This function initiates when system flushing is required.	
Termination: This function terminates when the DIW system utility hose is decoupled.	
Parallel or sequential functions: This function occurs sequentially with all other DVP system functions.	
Applicable Modes: Maintenance mode.	

Function: H.1	**Protect Equipment**
Detailed description: The GRE system provides grounding/lightning control functions for ACV and DVP electrical equipment in the LAW effluent process and utility buildings. The GRE system also provides a ground path in the event of an equipment fault or system short circuit.	
Initiation: This function is always active.	
Termination: This function should never terminate.	
Parallel or sequential functions: This function runs in parallel with all other functions.	
Applicable Modes: Normal and abnormal operations.	

Appendix C Active Safety Instruments and Functions

There are currently no active safety items to identify.

Appendix D System Procedures

RESERVED

Appendix E System History

RESERVED

Attachment 2
18-ECD-0078
(21 Pages Excluding Cover Sheet)

24590-LAB-3ZN-RLD-00004, *Add Construction and Installation Certification Requirements to 24590-LAB-3ZD-RLD-00001*

ISSUED BY
RPP-WTP PDC

System Design Description Change Notice

CHANGE DOCUMENT NO. 24590-LAB-3ZN-RLD-00004

JOB NO.	TITLE FOR CHANGE NOTICE
24590	Add Construction and Installation Certification Requirements to 24590-LAB-3ZD-RLD-00001

DOCUMENT NUMBER	REV	DOCUMENT NUMBER	REV
24590-LAB-3ZD-RLD-00001	1		

PART OF DESIGN CHANGE PACKAGE (DCP)? ☐ Yes ☒ No

Justification for no DCP: Impacted SSC has not been turned over to the Plant Management organization.

INCORPORATES AN EIE? ☐ Yes ☒ No If yes, list EIEs:

JUSTIFICATION FOR CHANGE

Treatment, storage or disposal of dangerous waste in the Lab RLD system cannot commence until the requirement to certify the Lab RLD system has been constructed in accordance with the WTP Dangerous Waste Permit. The addition of Section 3.10 of the Lab RLD SDD will facilitate the development of a Special RVM to submit to Washington State Department of Ecology as proof of construction certification.

Supersedes Change Document ☐ Yes ☒ No

REQUIREMENTS REVIEW

Client Approval Required ☐ Yes ☒ No | Interface Resolution Required * ☐ Yes ☐ No

Address any "yes" answers in the description

DESCRIPTION OF CHANGE

1. Add Section 3.10 as shown in Attachment.
2. The following changes are in addition to the Section 3.10 addition with additions (underlined) or deletions (~~strikethrough~~).
   - **1.5.1 Acronyms**
     SRVM specialized requirements verification matrix
   - **3.~~10~~11 Relevant Codes and Standards**
   - **3.~~10~~11.1 Codes of Record**
   - Table 3-~~3~~11 identifies relevant external codes and standards applicable to the RLD design. Use of the *Engineering, Procurement, and Construction (EPC) Code of Record*, 24590-WTP-COR-MGT-15-00001 is typically invoked in the design process through the documents identified in Section 3.~~10~~11.2.
   - **Table 3-~~3~~11 LAB RLD System Applicable Codes & Standards**
   - **3.~~10~~11.2 WTP Design Criteria, Design Guides, and General Specifications**
   - **Table 3-~~4~~12 WTP Design Criteria, Design Guides, and General Specifications Applicable to LAB RLD.**

ORIGINATOR	CHECKER
Systems Engineering – David Mears D Mears 4/4/18	Rhett Tranbarger 4/4/2018

Validation:	Environmental Protection	Barry Curn	D Mears for BARRY CURN - E-MAIL	4/5/2018
	Organization/Area of Responsibility	*Print/Type Name*	*Signature*	*Date*
Concurrence:				
	Title	*Print/Type Name*	*Signature*	*Date*
Concurrence:	Manager of Engineering and Design Authority	Ian Milgate		4/5/18
	Title	*Print/Type Name*	*Signature*	*Date*
Approval:	Systems Engineering Manager	Josh Shoemaker for Sarah Barker		4-9-18
	Title	*Print/Type Name*	*Signature*	*Date*

3.10 Dangerous Waste Permit (DWP) and Washington Administrative Code (WAC) for the RLD Tank System Construction and Installation Certification

The requirements delineated in this section are construction and installation certification requirements and do not include design or operational requirements. These WTP construction certification requirements will document that the WTP Dangerous Waste Management Units have been constructed in accordance with the WTP – Operating Unit Group 10 DWP requirements, Permit Number WA7890008967, Condition III.10.C.2.a and Washington Administrative Code (WAC) 173-303-810(14)(a).

3.10.1 Vessel (RLD-VSL-00164)

3.10.1.1 Vessel Construction (RLD-VSL-00164)

Requirement: The RLD-VSL-00164 construction and location shall be in accordance with the locations dimensions, capacities, material and appurtenances as shown in the DWP-permitted design as shown in Table 3-3.

Table 3-3 Analytical Laboratory C3 Laboratory Area Sink Drains Vessel (RLD-VSL-00164)

Vessel Number/Location	Description	Material	Total Volume (US Gallons)	Approximate Dimensions (Inside Diameter) x Height or Length in feet and inches (tangent line/tangent line)
RLD-VSL-00164 A-B003	Laboratory Area Sink Drain Collection Vessel	6% Mo	3,180	8 ft. 6 in. x 5 ft. 9 in.

[Table III.10.E.D, Chp. 04, Table 4H-1, DWP[ID : WA7890008967_WTP ID#5333][ID : WA7890008967_Chp 4.0 ID#1941]]

Basis Discussion: Locations, dimensions, capacities, material and appurtenances is provided in DWP Tables 4H-1.

Verification: Construction/installation verification is expected to be achieved through the following:

Verif. Method	Verif. By	Plan	Notes/Comments
R	**ENV**	Perform a review of the design to verify the material of construction, dimensions and location.	

3.10.1.2 Vessel (RLD-VSL-00164) Handling and Installation

Requirement: The installation of the RLD-VSL-00164 permitted vessel shall be performed with proper handling procedures to prevent damage to the system during installation. Prior to covering, enclosing, or placing the Lab RLD tank system or component, an independent, qualified installation inspector or an independent, qualified,

registered professional engineer, either of whom is trained and experienced in the proper installation of tank systems or components, must inspect the system as specified in WAC 173-303-640 (3)(c), WAC 173-303-640 (3)(h)

- Specify and document the handling or installation procedures to protect the integrity of the tank system. The procedures should prevent or detect the following defects:
    - weld breaks (WAC 173-303-640 (3)(c)(i))
    - punctures (WAC 173-303-640 (3)(c)(ii))
    - scrapes of protective coatings (WAC 173-303-640 (3)(c)(iii))
    - cracks (WAC 173-303-640 (3)(c)(iv))
    - corrosion (WAC 173-303-640 (3)(c)(v))
    - other structural damage or inadequate construction or installation (WAC 173-303-640(3)(c)(vi))
- Specify and document the remedies for any handling or installation procedure discrepancies identified before the tank system is covered, enclosed, or placed in use. (WAC 173-303-640(3)(c))

[Section III.10.E.3.a, Chp. 4.0, Section 4.2.5, DWP[ID : WA7890008967_WTP ID#321][ID : WA7890008967_Chp 4.0 ID#1765]]

Basis Discussion: This requirement is derived from the Washington Administrative Code (WAC) Dangerous Waste Regulations at WAC Chapter 173-303, specifically the Tank System regulations in WAC 173-303-640. These regulatory requirements have been incorporated into the Dangerous Waste Permit, WTP- Operating Unit Group 10, WA 7890008967, as permit condition III.10.E.3.a (WAC 173-303-640(3)(c), WAC 173-303-640(3)(h)).

Verification: Construction/installation verification is expected to be achieved through the following:

Verif. Method	Verif. By	Plan	Notes/Comments
R	**ENV**	Review completed independent qualified inspector installation packages.	

3.10.1.3 System Installation (RLD-VSL-00164)

Requirement: The independent tank system installation inspection and subsequent written statements will be certified pursuant to Permit Condition III.10.E.1.d., comply with all requirements of WAC 173-303-640(3)(h) and will consider, but not be limited to, the following tank system installation documentation:

- Field installation report with date of installation;
- Approved welding procedures;
- Welder qualifications and certification;
- Hydro-test reports, as applicable, in accordance with the American Society of Mechanical Engineers Boiler and Pressure Vessel Code, Section VIII, Division 1, American Petroleum Institute (API) Standard 620, or Standard 650 as applicable;
- Tester credentials;
- Field inspector credentials;
- Field inspector reports;
- Field waiver reports; and

- Non-compliance reports and corrective action (including field waiver reports) and repair reports.

[Section III.10.E.3.g, DWP[ID : WA7890008967_WTP ID#327]]

Basis Discussion: None.

Verification: Construction/installation verification is expected to be achieved through the following:

Verif. Method	Verif. By	Plan	Notes/Comments
R	**ENV**	Review completed independent qualified inspector installation packages.	

3.10.1.4 Vapor Collection System (RLD-VSL-00164)

Requirement: The Lab RLD-VSL-00164 tank system is constructed with features that prevent escape of vapors, fumes, or other emissions into the air. [Section III.10.E.9.c.xii, DWP[ID : WA7890008967_WTP ID#356]]

Basis Discussion: This requirement is derived from the Washington Administrative Code (WAC) Dangerous Waste Regulations at WAC Chapter 173-303, specifically the Tank System regulations in WAC 173-303-640. These regulatory requirements have been incorporated into the Dangerous Waste Permit, WTP- Operating Unit Group 10, WA 7890008967, as permit condition III.10.E.9.c.xii (WAC 173-303-640(5)(e)).

Verification: Construction/installation verification is expected to be achieved through the following:

Verif. Method	Verif. By	Plan	Notes/Comments
R	**ENV**	Review tank system as-built P&IDs/V&IDs to verify that process vapors are appropriately treated prior to release to the environment.	

3.10.1.5 Tightness Testing (RLD-VSL-00164)

Requirement: The Permittees must test for tightness for the RLD-VSL-00164 and ancillary equipment prior to these components being covered, enclosed, or placed into use. If a tank system is found not to be tight, all repairs necessary to remedy the leak(s) in the system must be performed prior to the tank system being covered, enclosed, or placed in use. [Section III.10.E.3.c, DWP[ID : WA7890008967_WTP ID#323]]

Basis Discussion: This requirement is derived from the Washington Administrative Code (WAC) Dangerous Waste Regulations at WAC Chapter 173-303, specifically the Tank System regulations in WAC 173-303-640. These regulatory requirements have been incorporated into the Dangerous Waste Permit, WTP- Operating Unit Group 10, WA 7890008967, as permit condition III.10.E.3.c (WAC 173-303-640(3)(e)).

Verification: Construction/installation verification is expected to be achieved through the following:

Verif. Method	Verif. By	Plan	Notes/Comments
R	**ENV**	Review completed independent qualified inspector installation packages.	

3.10.1.6 Spill and Overflow Prevention Controls (RLD-VSL-00164)

Requirement: RLD-VSL-00164 shall be constructed with the appropriate instrumentation to allow for the control and prevention of overflow from the tank or containment systems. See Table 3-4 for the overflow instruments.

Table 3-4 Associated Instruments for LAB RLD-VSL-00164

Monitoring/Control Parameter	Type of Instrument/Control Device	Instrument/Control Device Tag Number
Level Measurement for RLD-VSL-00164	Level Element	LE-6202
	Level Transmitter	LT-6202
	Level Indicator	LI-6202
Level Measurement for RLD-SUMP-00041	Level Transmitter	LT-6211
	Level Indicator	LI-6211
	Leak Rate	LKY-6211
Level Measurement for RLD-SUMP-00045	Level Transmitter	LT-6212
	Level Indicator	LI-6212
Level Measurement for RLD-LDB-00005	Level High Switch	LSH-6215
	Level High alarm	LAH-6215
Level Measurement for RLD-LDB-00006	Level High Switch	LSH-6701
	Level High Alarm	LAB-6701
Level Measurement for RLD-LDB-00007	Level High Switch	LSH-6702
	Level High Alarm	LAH-6702
Level Measurement for RLD-LDB-00008	Level High Switch	LSH-6703
	Level High Alarm	LAH-6703
Level Measurement for RLD-LDB-00011	Level High Switch	LSH-6704
	Level High Alarm	LAH-6704

[Section III.10.E.9.e.iv, DWP[ID : WA7890008967_WTP ID#336]]

Basis Discussion: Table 3-4 is developed from 24590-LAB-PER-J-03-001, *System Logic Description for Analytical Laboratory – Radioactive Liquid Waste (RLD) System*. This requirement is derived from the Washington Administrative Code (WAC) Dangerous Waste Regulations at WAC Chapter 173-303, specifically the Tank System regulations in WAC 173-303-640(5)(b). These regulatory requirements have been incorporated into the Dangerous Waste Permit, WTP- Operating Unit Group 10, WA 7890008967, as permit condition III.10.E.9.e.iv.

Verification: Construction/installation verification is expected to be achieved through the following:

Verif. Method	Verif. By	Plan	Notes/Comments
R	**ENV**	Review the Instrument Data Sheets for the instruments to verify Instruments in Table 3-4.	

3.10.1.7 Corrosion Protection (RLD-VSL-00164)

Requirement: The Permittees must provide the type and degree of corrosion protection for RLD-VSL-00164 recommended by an independent corrosion expert, based on the information provided in Operating Unit Group 10, Appendix 11.9, and 11.11 of this Permit, as approved pursuant to Permit Conditions III.10.E.9.b.i., III.10.E.9.b.iv., III.10.E.9.b.v., III.10.E.9.c.i., III.10.E.9.c.iv., III.10.E.9.c.v., III.10.E.9.d.i., III.10.E.9.d.iv., and III.10.E.9.d.v. or other corrosion protection if the Ecology believes other corrosion protection is necessary to ensure the integrity of the tank system during use of the tank system. The installation of a corrosion protection system that is field fabricated must be supervised by an independent corrosion expert to ensure proper installation. [Section III.10.E.3.e, DWP[ID : WA7890008967_WTP ID#325]]

Basis Discussion: This requirement is derived from the Washington Administrative Code (WAC) Dangerous Waste Regulations at WAC Chapter 173-303, specifically the Tank System regulations in WAC 173-303-640. These regulatory requirements have been incorporated into the Dangerous Waste Permit, WTP- Operating Unit Group 10, WA 7890008967, as permit condition III.10.E.3.e (WAC 173-303-640(3)(g)).

This requirement is not applicable to tank systems with components that are not in contact with soil or water.

Verification: Construction/installation verification is expected to be achieved through the following:

Verif. Method	Verif. By	Plan	Notes/Comments
R	**ENV**	Review the independent corrosion engineering report to verify the system meets the recommendations.	

3.10.1.8 Support and Protect Ancillary Equipment (RLD-VSL-00164)

Requirement: RLD-VSL-00164 ancillary equipment must be supported and protected against physical damage and excessive stress due to settlement, vibration, expansion, or contraction. (WAC 173-303-640(3)(f)). [Section III.10.E.3.d, DWP[ID : WA7890008967_WTP ID#324]]

Basis Discussion: This requirement is derived from the Washington Administrative Code (WAC) Dangerous Waste Regulations at WAC Chapter 173-303, specifically the Tank System regulations in WAC 173-303-640. These regulatory requirements have been incorporated into the Dangerous Waste Permit, WTP- Operating Unit Group 10, WA 7890008967, as permit condition III.10.E.3.d (WAC 173-303-640(3)(f)).

Verification: Construction/installation verification is expected to be achieved through the following:

Verif. Method	Veri. By	Plan	Notes/Comments
R	**ENV**	Review completed independent qualified inspector installation packages.	

3.10.1.9 Vaults, Black Cells and Secondary Containment (RLD-VSL-00164)

3.10.1.9.1 Cell Dimensions (A-B003)

Requirement: The vessel cell (Rm. No. A-B003) dimensions shall be 13 ft. 0 in. by 27 ft. 3 in. and minimum secondary containment liner height is at least 3.8 ft. [Chp. 4H, Table 4H-2, DWP[ID : WA7890008967_Chp 4.0 ID#1977]]

Basis of Discussion: The secondary containment for this tank system leak detection system is influenced by the geometry and slope of the cell floor. Additionally, the volume of containment is also influenced by the floor size.

Verification: Construction/installation verification is expected to be achieved through the following:

Verif. Method	Verif. By	Plan	Notes/Comments
R	**ENV**	Review the general arrangement drawings to verify the dimensions of the cell.	

3.10.1.9.2 Secondary Containment System Integrity (RLD-VSL-00164)

Requirement: Ensure the secondary containment for the RLD-VSL-00164 tank system, as approved/modified pursuant to Permit Condition III.10.E.9, are free of cracks or gaps to prevent any migration of dangerous and/or mixed waste or accumulated liquid out of the system to the soil, ground water, or surface water at any time that waste is in the tank system. [WAC 173-303-320, WAC 173-303-640(4)(b)(i), WAC 173-303-640(4)(e)(i)(C), WAC 173-303-640(6), and WAC 173-303-806(4)(c)(vii)]) [Section III.10.E.5.g, DWP[ID : WA7890008967_WTP ID#339]]

Basis Discussion: This requirement is derived from the Washington Administrative Code (WAC) Dangerous Waste Regulations at WAC Chapter 173-303, specifically the Tank System regulations in WAC 173-303-640. These regulatory requirements have been incorporated into the Dangerous Waste Permit, WTP- Operating Unit Group 10, WA 7890008967, as permit condition III.10.E.5.g (WAC 173-303-320, WAC 173-303-640(4)(b)(i), WAC 173-303-640(4)(e)(i)(C), WAC 173-303-640(6), and WAC 173-303-806(4)(c)(vii)).

Verification: Construction/installation verification is expected to be achieved through the following:

Verif. Method	Verif. By	Plan	Notes/Comments
I	**ENV**	Perform a permitted facility and system inspection of the tank system secondary containment to verify construction and installation is free of cracks or gaps to prevent any migration of dangerous and/or mixed waste.	

3.10.1.9.3 Construction of Secondary Containment (RLD-VSL-00164)

Requirement: The RLD-VSL-00164 system secondary containment will be constructed as identified in Table 3-5, as approved/modified pursuant to Permit Condition III.10.E.9, as specified in Operating Unit Group 10,

Appendices 11.2, 11.4 through 11.14, 11.18, of this Permit, as approved pursuant to Permit Conditions III.10.E.9.b., III.10.E.9.c., and III.10.E.9.d.

Table 3-5 RLD-VSL-00164 Secondary Containment Systems, Including Sumps and Floor Drains.

Sump I.D.#/Drain# & Room Location	Maximum Sump Capacity (gallons)	Sump Type/ Nominal Operating Volume (gallons)	Sump Dimensions[a] (inches) & Materials of Construction
RLD-SUMP-00041 A-B003 (C3 Effluent Vessel Cell, El. -18 ft. 7 in.)	30	Dry	30 in. Dia. X ~13 in. Deep Stainless Steel
RLD-SUMP-00045 A-B002 (C3 Pump Pit Sump, EL -6ft. -8 ½ in. low point)	1.56	Dry	2ft. X 2ft. -6 in. X ½ in.
RLD-WU-02207-S11E-04 A-B003, (C3 Effluent Vessel Cell)	N/A	N/A	4 in. Dia. 316L
[a]Dimensions listed are based on permitted design. Actual dimensions may vary within plus or minus (TBD).			

[Section III.10.E.2.b, Table III.10.E.P, DWP[ID : WA7890008967_WTP ID#315][ID : WA7890008967_WTP ID#5072][ID : WA7890008967_WTP ID#5074][ID : WA7890008967_WTP ID#5078]]

Basis of Discussion: Important containment features are delineated and described in these appendices with some specifics covered by construction requirements identified in this document.

Verification: Construction/installation verification is expected to be achieved through the following:

Verif. Method	Verif. By	Plan	Notes/Comments
R	**ENV**	Review drawings and specification to verify requirements are met.	

3.10.1.9.4 Leakage Detection Systems (RLD-VSL-00164)

Requirement: The Permittees will install and test all process and leak detection system monitoring/instrumentation, as specified in Table 3-6.

Table 3-6 LAB C3 Laboratory Area Sink Drain Collection Leak Detection System Instruments

Tank System Name and Locator	Maximum Capacity (gallons)	Type of Measuring or Leak Detection Instrument	Approximate Dimensions/Materials of Construction
RLD-LDB-00005 A-B003	6	Thermal Dispersion Level Switch	8 in. Dia. x 24 in. Length Stainless Steel (316L)
RLD-LDB-00006 A-B003	6	Thermal Dispersion Level Switch	8 in. Dia. x 24 in. Length Stainless Steel (316L)
RLD-LDB-00007 A-B003	6	Thermal Dispersion Level Switch	8 in. Dia. x 24 in. Length Stainless Steel (316L)
RLD-LDB-00008 A-B003	6	Thermal Dispersion Level Switch	8 in. Dia. x 24 in. Length Stainless Steel (316L)
RLD-LDB-00011 A-B003	6	Thermal Dispersion Level Switch	8 in. Dia. x 24 in. Length Stainless Steel (316L)

[Sections III.10.E.5.b, III.10.E.9.e.ii, Table III.10.E.H, III.10.E.P, Chp 4.0, Table 4H-3, DWP[ID : WA7890008967_WTP ID#334][ID : WA7890008967_WTP ID#358][ID : WA7890008967_WTP ID#4897][ID : WA7890008967_WTP ID#4903][ID : WA7890008967_WTP ID#4904][ID : WA7890008967_WTP ID#4905][ID : WA7890008967_WTP ID#4906][ID : WA7890008967_WTP ID#4908][ID : WA7890008967_WTP ID#5084][ID : WA7890008967_WTP ID#5085][ID : WA7890008967_WTP ID#5086][ID : WA7890008967_WTP ID#5087][ID : WA7890008967_WTP ID#5089][ID : WA7890008967_Chp 4.0 ID#2302][ID : WA7890008967_Chp 4.0 ID#2303][ID : WA7890008967_Chp 4.0 ID#2304][ID : WA7890008967_Chp 4.0 ID#2305][ID : WA7890008967_Chp 4.0 ID#2307]]

Basis Discussion: The Lab Facility tank RLD-VSL-00164, LAB Area Sink Drain Collection Vessel, containment sump systems and associated ancillary equipment that handle dangerous waste system provides leak detection capability to detect the presence of any release of mixed or dangerous waste, or accumulated liquid in the secondary containment system, to indicate the need of transfer until collected material is removed. This requirement applies to the RLD leak detection boxes connected to the coaxial piping and the following sumps: RLD-SUMP-00041, and 00045.

This requirement is derived from the Washington Administrative Code (WAC) Dangerous Waste Regulations at WAC Chapter 173-303, specifically the Tank System Regulations in WAC 173-303-640. These regulatory requirements have been incorporated into the Dangerous Waste Permit, WTP – Operating Unit Group 10, WA 78900089, as permit condition III.10.E.9.e.ii (WAC 173-303-640(4)(c)(iii)).

Verification: Construction/installation verification is expected to be achieved through the following:

Verif. Method	Verif. By	Plan	Notes/Comments
R	**ENV**	Review the Instrument Data Sheets for the instruments to verify the criteria in Table 3-6.	

3.10.1.9.5 Secondary Containment Support (RLD-VSL-00164)

Requirement: Secondary containment systems must be at a minimum:

- Placed on a foundation or base capable of providing support to the secondary containment system, resistance to pressure gradients above and below the system, and capable of preventing failure due to settlement, compression, or uplift.
- Resisting the pressure gradients above and below the system
- Preventing failure due to settlement, compression, or uplift

[Section III.10.E.9.b.iii, DWP[ID : WA7890008967_WTP ID#355]]

Basis Discussion: This requirement is derived from the Washington Administrative Code (WAC) Dangerous Waste Regulations at WAC Chapter 173-303, specifically the Tank System regulations in WAC 173-303-640. These regulatory requirements have been incorporated into the Dangerous Waste Permit, WTP- Operating Unit Group 10, WA 7890008967, as permit condition III.10.E.9.b.iii (WAC 173-303-640(4)(c)(ii)).

Verification: Construction/installation verification is expected to be achieved through the following:

Verif. Method	Verif. By	Plan	Notes/Comments
R	**ENV**	Review completed independent qualified inspector installation packages.	

3.10.1.9.6 Impermeable Coatings (RLD-VSL-00164)

Requirement: An impermeable coating, as specified in Operating Unit Group 10, Appendices 11.4,11.5, 11.7, 11.9, 11.11, and 11.12 of this Permit, as approved pursuant to Permit Condition III.10.E.9.b.v., will be installed for all concrete containment systems and concrete portions of containment systems for each WTP Unit Tank System listed in Permit Tables III.10.E.D and P that do not have a liner and have construction joints, must meet the requirements of WAC 173-303-640(4)(e)(ii)(C) and -806(4)(c)(vii). The coating will prevent migration of any dangerous and/or mixed waste into the concrete. All coatings will meet the following performance standards:

- The coating must seal the containment surface such that no cracks, seams, or other avenues through which liquid could migrate are present;
- The coating must be of adequate thickness and strength to withstand the normal operation of equipment and personnel within the given area such that degradation or physical damage to the coating or lining can be identified and remedied before dangerous and/or mixed waste could migrate from the system; and
- The coating must be compatible with the dangerous and/or mixed waste, treatment reagents, or other materials managed in the containment system (WAC 173-303-640(4)(e)(ii)(D), WAC 173-303-806(4)(c)(vii)).

[Sections III.10.E.5.h, DWP III.10.E.5.h.i, DWP III.10.E.5.h.ii, DWP III.10.E.5.h.iii, DWP[ID : WA7890008967_WTP ID#340]]

Basis of Discussion: This requirement is derived from the Washington Administrative Code (WAC) Dangerous Waste Regulations at WAC Chapter 173-303, specifically the Tank System regulations in WAC 173-303-640. These regulatory requirements have been incorporated into the Dangerous Waste Permit, WTP- Operating Unit Group 10, WA 7890008967, as permit condition III.10.E.5.h, III.10.E.5.h.i, III.10.E.5.h.ii, III.10.E.5.h.iii, (WAC 173-303-640(4)(c)(i), (WAC 173-303-640(4)(e)(i)(A), (WAC 173-303-640(4)(e)(ii)(A)).

Verification: Construction/installation verification is expected to be achieved through the following:

Verif. Method	Verif. By	Plan	Notes/Comments
R	**ENV**	Review the construction documentation to verify the impermeable coating have been installed.	
I	**ENV**	Perform a permitted facility and system inspection of tank system to verify construction and installation is in compliance with the permitted design.	

3.10.1.10 Vessel (RLD-VSL-00164) Above Ground Piping

Requirement: Tank system piping will be constructed of the materials specified in the approved design. [Sections III.10.C.10.a, III.10.C.9.c, III.10.E.2.a, DWP[ID : WA7890008967_WTP ID#227][ID : WA7890008967_WTP ID#219][ID : WA7890008967_WTP ID#314]]

Basis Discussion: The requirement to verify the materials for above ground piping is a direct request for Washington State Department of Ecology to certify the materials in use for the piping.

Verification: Construction/installation verification is expected to be achieved through the following:

Verif. Method	Verif. By	Plan	Notes/Comments
R	**ENV**	Review of construction and installation will be accomplished through the 24590-WTP-GPG-ENG-087, *Statistical Sampling Methods of Engineering Quality Monitoring and Inspection.*	

3.10.2 Vessel (RLD-VSL-00165)

3.10.2.1 Vessel Construction (RLD VSL-00165)

Requirement: The RLD-VSL-00165 construction and location shall be in accordance with the locations dimensions, capacities, material and appurtenances as shown in the DWP-permitted design as shown in Table 3-7

Table 3-7 Analytical Laboratory C5 Effluent Vessel

Vessel Number/Location	Description	Material	Total Volume (US Gallons)	Approximate Dimensions (Inside Diameter) x Height or Length in feed and inches (tangent line/tangent line)
RLD-VSL-00165 A-B004	Hotcell Drain Collection Vessel	6% Mo	9,100	16 ft. x 2 ft. 3 in.

[Table III.10.E.D, Chp. 04, Table 4H-1, DWP[ID : WA7890008967_WTP ID#5333][ID : WA7890008967_Chp 4.0 ID#1942]]

Basis Discussion: Locations, dimensions, capacities, material and appurtenances is provided in DWP Tables 4H-1.

Verification: Construction/installation verification is expected to be achieved through the following:

Verif. Method	Verif. By	Plan	Notes/Comments
R	**ENV**	Perform a review of the design to verify the material of construction, dimensions and location.	

3.10.2.2 Vessels (RLD VSL-00165) Handling and Installation

Requirement: The installation of the RLD-VSL-00165 permitted vessel shall be performed with proper handling procedures to prevent damage to the system during installation. Prior to covering, enclosing, or placing the Lab RLD tank system or component, an independent, qualified installation inspector or an independent, qualified, registered professional engineer, either of whom is trained and experienced in the proper installation of tank systems or components, must inspect the system as specified in WAC 173-303-640 (3)(c), WAC 173-303-640 (3)(h).

- Specify and document the handling or installation procedures to protect the integrity of the tank system. The procedures should prevent or detect the following defects:
    - weld breaks (WAC 173-303-640 (3)(c)(i))
    - punctures (WAC 173-303-640 (3)(c)(ii))
    - scrapes of protective coatings (WAC 173-303-640 (3)(c)(iii))
    - cracks (WAC 173-303-640 (3)(c)(iv))
    - corrosion (WAC 173-303-640 (3)(c)(v))
    - other structural damage or inadequate construction or installation (WAC 173-303-640(3)(c)(vi))
- Specify and document the remedies for any handling or installation procedure discrepancies identified before the tank system is covered, enclosed, or placed in use. (WAC 173-303-640(3)(c))

[Section III.10.E.3.a, Chp. 4.0, Section 4.2.5, DWP[ID : WA7890008967_WTP ID#321][ID : WA7890008967_Chp 4.0 ID#1765]]

Basis Discussion: This requirement is derived from the Washington Administrative Code (WAC) Dangerous Waste Regulations at WAC Chapter 173-303, specifically the Tank System regulations in WAC 173-303-640. These regulatory requirements have been incorporated into the Dangerous Waste Permit, WTP- Operating Unit Group 10, WA 7890008967, as permit condition III.10.E.3.a (WAC 173-303-640(3)(c), WAC 173-303-640(3)(h)).

Verification: Construction/installation verification is expected to be achieved through the following:

Verif. Method	Verif. By	Plan	Notes/Comments
R	**ENV**	Review completed independent qualified inspector installation packages.	

3.10.2.3 System Installation (RLD VSL-00165)

Requirement: The independent tank system installation inspection and subsequent written statements will be certified pursuant to Permit Condition III.10.E.1.d., comply with all requirements of WAC 173-303-640(3)(h) and will consider, but not be limited to, the following tank system installation documentation:

- Field installation report with date of installation;
- Approved welding procedures;
- Welder qualifications and certification;
- Hydro-test reports, as applicable, in accordance with the American Society of Mechanical Engineers Boiler and Pressure Vessel Code, Section VIII, Division 1, American Petroleum Institute (API) Standard 620, or Standard 650 as applicable;
- Tester credentials;
- Field inspector credentials;
- Field inspector reports;
- Field waiver reports; and
- Non-compliance reports and corrective action (including field waiver reports) and repair reports.

[Section III.10.E.3.g, DWP[ID : WA7890008967_WTP ID#327]]

Basis Discussion: None

Verification: Construction/installation verification is expected to be achieved through the following:

Verif. Method	Verif. By	Plan	Notes/Comments
R	**ENV**	Review completed independent qualified inspector installation packages.	

3.10.2.4 Vapor Collection System (RLD VSL-00165)

Requirement: The Lab RLD-VSL-00165 tank system is constructed with features that prevent escape of vapors, fumes, or other emissions into the air. [Section III.10.E.9.c.xii, DWP[ID : WA7890008967_WTP ID#356]]

Basis Discussion: This requirement is derived from the Washington Administrative Code (WAC) Dangerous Waste Regulations at WAC Chapter 173-303, specifically the Tank System regulations in WAC 173-303-640. These regulatory requirements have been incorporated into the Dangerous Waste Permit, WTP- Operating Unit Group 10, WA 7890008967, as permit condition III.10.E.9.c.xii (WAC 173-303-640(5)(e)).

Verification: Construction/installation verification is expected to be achieved through the following:

Verif. Method	Verif. By	Plan	Notes/Comments
R	**ENV**	Review tank system as-built P&IDs/V&IDs to verify that process vapors are appropriately treated prior to release to the environment.	

3.10.2.5 Tightness Testing (RLD VSL-00165)

Requirement: The Permittees must test for tightness for the RLD-VSL-00165 and ancillary equipment prior to these components being covered, enclosed, or placed into use. If a tank system is found not to be tight, all repairs necessary to remedy the leak(s) in the system must be performed prior to the tank system being covered, enclosed, or placed in use. [Section III.10.E.3.c, DWP[ID : WA7890008967_WTP ID#323]]

Basis Discussion: This requirement is derived from the Washington Administrative Code (WAC) Dangerous Waste Regulations at WAC Chapter 173-303, specifically the Tank System regulations in WAC 173-303-640. These regulatory requirements have been incorporated into the Dangerous Waste Permit, WTP- Operating Unit Group 10, WA 7890008967, as permit condition III.10.E.3.c (WAC 173-303-640(3)(e)).

Verification: Construction/installation verification is expected to be achieved through the following:

Verif. Method	Verif. By	Plan	Notes/Comments
R	**ENV**	Review completed independent qualified inspector installation packages.	

3.10.2.6 Spill and Overflow Prevention Controls (RLD-VSL-00165)

Requirement: RLD-VSL-00165 shall be constructed with the appropriate instrumentation to allow for the control and prevention of overflow from the tank or containment systems. See Table 3-8 for the overflow instruments.

Table 3-8 Associated Instruments for LAB RLD-VSL-0165

Monitoring/Control Parameter	Type of Instrument/Control Device	Instrument/Control Device Tag Number
Level Measurement for RLD-VSL-00165	Level Element	LE-6104
	Level Transmitter	LT-6104
	Level Indicator	LI-6104
Level Measurement for RLD-SUMP-00042	Level Transmitter	LT-6115
	Level Indicator	LI-6115
	Leak Rate	LKY-6115

Level Measurement for RLD-SUMP-00043A	Level Transmitter	LT-6116
	Level Indicator	LI-6116
Level Measurement for RLD-SUMP-00043B	Level Transmitter	LT-6124
	Level Indicator	LI-6124
Level Measurement for RLD-SUMP-00044	Level Transmitter	LT-6123
	Level Indicator	LI-6123
Level Measurement for RLD-LDB-00002	Level High Switch	LSH-6120
	Level High Alarm	LAH-6120
Level Measurement for RLD-LDB-00004	Level High Switch	LSH-6118
	Level High Alarm	LAH-6118
Level Measurement for RLD-LDB-00009	Level High Switch	LSH-6801
	Level High Alarm	LAH-6801

[Section III.10.E.9.e.iv, DWP[ID : WA7890008967_WTP ID#336]]

Basis Discussion: Table 3-8 is developed from 24590-LAB-PER-J-03-001, System Logic Description for Analytical Laboratory – Radioactive Liquid Waste (RLD) System. This requirement is derived from the Washington Administrative Code (WAC) Dangerous Waste Regulations at WAC Chapter 173-303, specifically the Tank System regulations in WAC 173-303-640(5)(b). These regulatory requirements have been incorporated into the Dangerous Waste Permit, WTP- Operating Unit Group 10, WA 7890008967, as permit condition III.10.E.9.e.iv.

Verification: Construction/installation verification is expected to be achieved through the following:

Verif. Method	Verif. By	Plan	Notes/Comments
R	**ENV**	Review the Instrument Data Sheets for the instruments to verify instruments in Table 3-8.	

3.10.2.7 Corrosion Protection (RLD VSL-00165)

Requirement: The Permittees must provide the type and degree of corrosion protection for RLD-VSL-00165 recommended by an independent corrosion expert, based on the information provided in Operating Unit Group 10, Appendices 11.9, and 11.11 of this Permit, as approved pursuant to Permit Conditions III.10.E.9.b.i., III.10.E.9.b.iv., III.10.E.9.b.v., III.10.E.9.c.i., III.10.E.9.c.iv., III.10.E.9.c.v., III.10.E.9.d.i., III.10.E.9.d.iv., and III.10.E.9.d.v. or other corrosion protection if the Ecology believes other corrosion protection is necessary to ensure the integrity of the tank system during use of the tank system. The installation of a corrosion protection system that is field fabricated must be supervised by an independent corrosion expert to ensure proper installation. [Section III.10.E.3.e, DWP[ID : WA7890008967_WTP ID#325]]

Basis Discussion: This requirement is derived from the Washington Administrative Code (WAC) Dangerous Waste Regulations at WAC Chapter 173-303, specifically the Tank System regulations in WAC 173-303-640. These regulatory requirements have been incorporated into the Dangerous Waste Permit, WTP- Operating Unit Group 10, WA 7890008967, as permit condition III.10.E.3.e (WAC 173-303-640(3)(g)).

This requirement is not applicable to tank systems with components that are not in contact with soil or water.

Verification: Construction/installation verification is expected to be achieved through the following:

Verif. Method	Verif. By	Plan	Notes/Comments
R	**ENV**	Review the independent corrosion engineering report to verify the system meets the recommendations.	

3.10.2.8 Support and Protect Ancillary Equipment

Requirement: RLD-VSL-00165 ancillary equipment must be supported and protected against physical damage and excessive stress due to settlement, vibration, expansion, or contraction. (WAC 173-303-640(3)(f)). [Section III.10.E.3.d, DWP[ID : WA7890008967_WTP ID#324]]

Basis Discussion: This requirement is derived from the Washington Administrative Code (WAC) Dangerous Waste Regulations at WAC Chapter 173-303, specifically the Tank System regulations in WAC 173-303-640. These regulatory requirements have been incorporated into the Dangerous Waste Permit, WTP- Operating Unit Group 10, WA 7890008967, as permit condition III.10.E.3.a (WAC 173-303-640(3)(f)).

Verification: Construction/installation verification is expected to be achieved through the following:

Verif. Method	Verif. By	Plan	Notes/Comments
R	**ENV**	Review completed independent qualified inspector installation packages.	

3.10.2.9 Vaults, Black Cells and Secondary Containment

3.10.2.9.1 Cell Dimensions (A-B004)

Requirement: The vessel cell (Rm. No. A-B004) dimensions shall be 29 ft. by 21ft. and minimum secondary containment liner height is at least 2.7 ft. [Chp. 4, Table 4H-2, DWP[ID : WA7890008967_Chp 4.0 ID#1977]]

Basis of Discussion: The secondary containment for this tank system leak detection system is influenced by the geometry and slope of the cell floor. Additionally, the volume of containment is also influenced by the floor size.

Verification: Construction/installation verification is expected to be achieved through the following:

Verif. Method	Verif. By	Plan	Notes/Comments
R	**ENV**	Review the general arrangement drawings to verify the dimensions of the cell.	

3.10.2.9.2 Secondary Containment System Integrity (RLD VSL-00165)

Requirement: Ensure the secondary containment for the RLD-VSL-00165 tank system, as approved/modified pursuant to Permit Condition III.10.E.9, are free of cracks or gaps to prevent any migration of dangerous and/or mixed waste or accumulated liquid out of the system to the soil, ground water, or surface water at any time that

waste is in the tank system. [WAC 173-303-320, WAC 173-303-640(4)(b)(i), WAC 173-303-640(4)(e)(i)(C), WAC 173-303-640(6), and WAC 173-303-806(4)(c)(vii)]) [Section III.10.E.5.g, DWP[ID : WA7890008967_WTP ID#339]]

Basis Discussion: This requirement is derived from the Washington Administrative Code (WAC) Dangerous Waste Regulations at WAC Chapter 173-303, specifically the Tank System regulations in WAC 173-303-640. These regulatory requirements have been incorporated into the Dangerous Waste Permit, WTP- Operating Unit Group 10, WA 7890008967, as permit condition III.10.E.5.g (WAC 173-303-320, WAC 173-303-640(4)(b)(i), WAC 173-303-640(4)(e)(i)(C), WAC 173-303-640(6), and WAC 173-303-806(4)(c)(vii)).

Verification: Construction/installation verification is expected to be achieved through the following:

Verif. Method	Verif. By	Plan	Notes/Comments
I	**ENV**	Perform a permitted facility and system inspection of the tank system secondary containment to verify construction and installation is free of cracks or gaps to prevent any migration of dangerous and/or mixed waste.	

3.10.2.9.3 Construction of Secondary Containment (RLD VSL-00165)

Requirement: The RLD-VSL-00165 system secondary containment will be constructed as identified in Table 3-9, as approved/modified pursuant to Permit Condition III.10.E.9, as specified in Operating Unit Group 10, Appendices 11.2, 11.4 through 11.14, 11.18, of this Permit, as approved pursuant to Permit Conditions III.10.E.9.b., III.10.E.9.c., and III.10.E.9.d.

Table 3-9 RLD-VSL-00165 Secondary Containment Systems, Including Sumps and Floor Drains.

Sump I.D.#/Drain# & Room Location	Maximum Sump Capacity (gallons)	Sump Type/ Nominal Operating Volume (gallons)	Sump Dimensions[a] (inches) & Materials of Construction
RLD-SUMP-00042 A-B004 (C5 Effluent Vessel Cell, El. -19 ft. 2 in.)	30	Dry	30 in. Dia. X ~13" Deep Stainless Steel
RLD-SUMP-00043A A-B007 (C5 Pump Pit Sump, EL -6 ft. -7 in. low point)	1.40	Dry	1 ft. -6 in. X 3 ft. X ½ in. Stainless Steel
RLD-SUMP-00043B A-B005 (C5 Pump Pit Sump, EL -6 ft. -7 in. LP)	1.40	Dry	1 ft. -6 in. X 3 ft. X ½ in. Stainless Steel
RLD-SUMP-00044	1.56	Dry	2 ft. X 2 ft. -6 in. X ½ in. Stainless Steel

Sump I.D.#/Drain# & Room Location	Maximum Sump Capacity (gallons)	Sump Type/ Nominal Operating Volume (gallons)	Sump Dimensions[a] (inches) & Materials of Construction
A-B006 (C5 Piping Pit Sump, EL -6 ft. -7 in. LP)			
RLD-ZN-02203-S11E-04 A-B004, (C5 Effluent Vessel Cell)	N/A	N/A	4 in. Dia. 316L
RLD-ZN-03393-S11E-04 A-B004, (C5 Effluent Vessel Cell)	N/A	N/A	4 in. Dia. 316L
RLD-ZN-03394-S11E-04 A-B004, (C5 Effluent Vessel Cell)	N/A	N/A	4 in. Dia. 316L
[a]Dimensions listed are based on permitted design. Actual dimensions may vary within plus or minus (TBD).			

[Section III.10.E.2.b, Table III.10.E.P, DWP[ID : WA7890008967_WTP ID#315][ID : WA7890008967_WTP ID#5073][ID : WA7890008967_WTP ID#5075][ID : WA7890008967_WTP ID#5076][ID : WA7890008967_WTP ID#5077][ID : WA7890008967_WTP ID#5079][ID : WA7890008967_WTP ID#5080][ID : WA7890008967_WTP ID#5081]]

Basis of Discussion: Important containment features are delineated and described in these appendices with some specifics covered by construction requirements identified in this document.

Verification: Construction/installation verification is expected to be achieved through the following:

Verif. Method	Verif. By	Plan	Notes/Comments
R	**ENV**	Review drawings and specification to verify requirements are met.	

3.10.2.9.4 Leakage Detection Systems (RLD VSL-00165)

Requirement: The Permittees will install and test all process and leak detection system monitoring/instrumentation, Table 3-10.

Table 3-10 LAB C5 Effluent Cell Leak Detection System Instruments

Tank System Name and Locator	Maximum Capacity (gallons)	Type of Measuring or Leak Detection Instrument	Approximate Dimensions/Materials of Construction
RLD-LDB-00002 A-B004	6	Thermal Dispersion Level Switch	8 in. Dia. x 24 in. Length Stainless Steel (316L)
RLD-LDB-00004 A-B004	6	Thermal Dispersion Level Switch	8 in. Dia. x 24 in. Length Stainless Steel (316L)
RLD-LDB-00009 A-B004	6	Thermal Dispersion Level Switch	8 in. Dia. x 24 in. Length Stainless Steel (316L)

[Sections III.10.E.5.b, III.10.E.9.e.ii, Table III.10.E.H, III.10.E.P, Chp 4.0, Table 4H-3, DWP[ID : WA7890008967_WTP ID#334][ID : WA7890008967_WTP ID#358,][ID : WA7890008967_WTP ID#4896][ID : WA7890008967_WTP ID#4901][ID : WA7890008967_WTP ID#4902][ID : WA7890008967_WTP ID#4907][ID : WA7890008967_WTP ID#5082][ID : WA7890008967_WTP ID#5083][ID : WA7890008967_WTP ID#5088][ID : WA7890008967_Chp 4.0 ID#2300][ID : WA7890008967_Chp 4.0 ID#2301][ID : WA7890008967_Chp 4.0 ID#2306]]

Basis Discussion: The Lab Facility tank RLD-VSL-00165, Hot Drain Collection Vessel, containment sump systems and associated ancillary equipment that handle dangerous waste system provides leak detection capability to detect the presence of any release of mixed or dangerous waste, or accumulated liquid in the secondary containment system, to indicate the need of transfer until collected material is removed. This requirement applies to the RLD leak detection boxes connected to the coaxial piping and the following sumps: RLD-SUMP-00042, 00043A, 00043B, and 00044.

This requirement is derived from the Washington Administrative Code (WAC) Dangerous Waste Regulations at WAC Chapter 173-303, specifically the Tank System Regulations in WAC 173-303-640. These regulatory requirements have been incorporated into the Dangerous Waste Permit, WTP – Operating Unit Group 10, WA 78900089, as permit condition III.10.E.9.e.ii (WAC 173-303-640(4)(c)(iii)).

Verification: Construction/installation verification is expected to be achieved through the following:

Verif. Method	Verif. By	Plan	Notes/Comments
R	**ENV**	Review the Instrument Data Sheets for the instruments to verify the criteria in Table 3-10.	

3.10.2.9.5 Secondary Containment Support (RLD VSL-00165)

Requirement: Secondary containment systems must be at a minimum:

- Placed on a foundation or base capable of providing support to the secondary containment system, resistance to pressure gradients above and below the system, and capable of preventing failure due to settlement, compression, or uplift.
- Resisting the pressure gradients above and below the system
- Preventing failure due to settlement, compression, or uplift

[Section III.10.E.9.b.iii, DWP[ID : WA7890008967_WTP ID#355]]

Basis Discussion: This requirement is derived from the Washington Administrative Code (WAC) Dangerous Waste Regulations at WAC Chapter 173-303, specifically the Tank System regulations in WAC 173-303-640. These regulatory requirements have been incorporated into the Dangerous Waste Permit, WTP- Operating Unit Group 10, WA 7890008967, as permit condition III.10.E.9.b.iii (WAC 173-303-640(4)(c)(ii)).

Verification: Construction/installation verification is expected to be achieved through the following:

Verif. Method	Verif. By	Plan	Notes/Comments
R	**ENV**	Review completed independent qualified inspector installation packages.	

3.10.2.9.6 Impermeable Coatings (RLD VSL-00165)

Requirement: An impermeable coating, as specified in Operating Unit Group 10, Appendices 11.4,11.5, 11.7, 11.9, 11.11, and 11.12 of this Permit, as approved pursuant to Permit Condition III.10.E.9.b.v., will be installed for all concrete containment systems and concrete portions of containment systems for each WTP Unit Tank System listed in Permit Tables III.10.E.D and P that do not have a liner and have construction joints, must meet the requirements of WAC 173-303-640(4)(e)(ii)(C) and -806(4)(c)(vii). The coating will prevent migration of any dangerous and/or mixed waste into the concrete. All coatings will meet the following performance standards:

- The coating must seal the containment surface such that no cracks, seams, or other avenues through which liquid could migrate are present;
- The coating must be of adequate thickness and strength to withstand the normal operation of equipment and personnel within the given area such that degradation or physical damage to the coating or lining can be identified and remedied before dangerous and/or mixed waste could migrate from the system; and
- The coating must be compatible with the dangerous and/or mixed waste, treatment reagents, or other materials managed in the containment system (WAC 173-303-640(4)(e)(ii)(D), WAC 173-303-806(4)(c)(vii)).

[Sections III.10.E.5.h, III.10.E.5.h.i, III.10.E.5.h.ii, III.10.E.5.h.iii, DWP[ID : WA7890008967_WTP ID#340]]

Basis of Discussion: This requirement is derived from the Washington Administrative Code (WAC) Dangerous Waste Regulations at WAC Chapter 173-303, specifically the Tank System regulations in WAC 173-303-640. These regulatory requirements have been incorporated into the Dangerous Waste Permit, WTP- Operating Unit Group 10, WA 7890008967, as permit condition III.10.E.5.h, III.10.E.5.h.i, III.10.E.5.h.ii, III.10.E.5.h.iii, (WAC 173-303-640(4)(c)(i), (WAC 173-303-640(4)(e)(i)(A), (WAC 173-303-640(4)(e)(ii)(A)).

Verification: Construction/installation verification is expected to be achieved through the following:

Verif. Method	Verif. By	Plan	Notes/Comments
R	**CON**	Review the construction documentation to verify the impermeable coating have been installed.	
I	**ENV**	Perform a permitted facility and system inspection of tank system to verify construction and installation is in compliance with the permitted design.	

3.10.2.10 Vessel (RLD-VSL-00165) Above Ground Piping

Requirement: Tank system piping must be constructed of the materials specified in the approved design. [Sections III.10.C.10.a, III.10.C.9.c, III.10.E.2.a, DWP[ID : WA7890008967_WTP ID#227][ID : WA7890008967_WTP ID#219][ID : WA7890008967_WTP ID#314]]

Basis Discussion: The requirement to verify the materials for above ground piping is a direct request for Washington State Department of Ecology to certify the materials in use for the piping.

Verification: Construction/installation verification is expected to be achieved through the following:

Verif. Method	Verif. By	Plan	Notes/Comments
R	**ENV**	Review of construction and installation will be accomplished through the 24590-WTP-GPG-ENG-087, *Statistical Sampling Methods of Engineering Quality Monitoring and Inspection.*	

Attachment 3
18-ECD-0078
(342 Pages Excluding Cover Sheet)

24590-LAW-3ZD-LOP-00001, Rev. 2, *LAW Primary Offgas Process (LOP) and LAW Secondary Offgas/Vessel Vent Process (LVP) System Design Description*

ISSUED BY

RPP-WTP PDC

LAW Primary Offgas Process (LOP) and LAW Secondary Offgas/Vessel Vent Process (LVP) System Design Description

Document title:	LAW Primary Offgas Process (LOP) and LAW Secondary Offgas/Vessel Vent Process (LVP) System Design Description
Document number:	24590-LAW-3ZD-LOP-00001
Revision number:	2
Type:	☑ System Design Description ☐ Facility Design Description
Originator(s):	Rhett Tranbarger
Checked by:	Wayne Sexton
Checker's signature:	Signature — Date: 20-July-2018
Concurrence:	~~Thomas Hughes~~ Ian Milgate 07/20/18
Concurrence signature:	Manager of Production Engineering Signature — Date: 7/23/18
Concurrence:	Ian Milgate
Concurrence signature:	Project Technical Director and Design Authority Signature — Date: 7/23/18
Approved by:	Sarah Barker
Approver's position:	Systems Engineering Manager
Approver's signature:	Signature — Date: 7.24.18

Validation

Appl.	Requirement Area	Requirement Developer	Signature	Date
☐	Architectural Design			
☐	Civil/Structural Design			
☐	Controls & Instrumentation Design			
☐	Electrical Design & Authority Having Jurisdiction			
☐	Fire Protection Engineering			
☐	HVAC Design			
☐	Mechanical Handling Design			
☐	Mechanical Systems Design			
☐	Plant Design			
☐	Process Engineering			
☐	Interface (External)			
☐	Interface (Internal)			
☐	System Functions and Requirements			
☐	Equipment Environmental Qualification			
☐	Materials Engineering / Technology			
☐	Plant Software Design			
☐	Environmental Permitting (ES&H)			
☐	Nuclear Safety Engineering			
☐	Criticality Safety			
☐	Radiological Engineering			
☐	Industrial Safety/Hygiene (ES&H)			
☐	Mission (WTP Contract Functional/ Performance Requirements)			
☐	Operations Requirements Document (Plant Operations)			
☐	Quality Assurance			
☐	Safeguards & Security			
☐	Startup			
☐	Transportation & Logistics			

* Validation not required for alpha/preliminary design description documents.

NSE Review: No safety evaluation is required, No technical comments.
The subject SDD and SDDCNs discussed below flow requirements from higher tier documents (e.g., DSA). These are a reflection of the DSA and do not alter design from what was analyzed, nor is there any impact to the safety design basis. N/A-10, item 2 applies.

Reviewed
No Comments
By: Robert Birchenough - rjbirche
Org Name: Bechtel National, Inc.
Placed: Jul 26, 2018

History Sheet

Rev	Reason for revision	Revised by
0	Initial issue. Supersedes 24590-LAW-3YD-LOP-00001, Rev 4, *System Description for the LAW Primary Offgas (LOP) and Secondary Offgas/Vessel Vent (LVP) Systems*.	N. J Darwen / D. Muha
1	Incorporates the following change documents: • 24590-LAW-3ZN-LOP-00002 Phase 2A major revision. Programmatic requirements added to Appendix F. Linked documents: 24590-LAW-EIE-M-16-0033, Rev 000; Not Applicable. 24590-LAW-EIE-M-16-0040, Rev 000; Implemented. 24590-LAW-EIE-M-16-0004, Rev 000; Implemented. 24590-LAW-EIE-M-17-0027, Rev 000; Implemented. 24590-LAW-EIE-MS-16-0025, Rev 000; Implemented. 24590-LAW-EIE-NS-17-0001, Rev 000; Implemented. 24590-WTP-EIE-ENG-17-0017, Rev 000; Not Applicable 24590-WTP-EIE-SYSE-16-0013, Rev 000; Implemented	D.W. Mears
2	Incorporate SDDCNs 24590-LAW-3ZN-LOP-00006 and -00007	R. Tranbarger

Contents

Validation ii

History Sheet iii

1 Introduction 1

1.1 System Identification 1

1.2 Limitations and Scope 1

1.3 Ownership and Maintenance 2

1.4 Definitions/Glossary 2

1.5 Acronyms and System Designators 2
1.5.1 Acronyms 2
1.5.2 WTP Designators 3

2 General Overview 4

2.1 System and Safety Functions 8

2.2 System Classification 13

2.3 Basic Operational Overview 13

3 Design Requirements 17

3.1 Requirements 17

3.2 Bases 17

3.3 References 18

3.4 General Requirements 18
3.4.1 Mission and Functional / Performance Requirements (Including States and Modes) 18
3.4.2 Nuclear Safety, ALARA, Environmental, and Other Regulatory Requirements 23
3.4.3 System Interface Requirements 46
3.4.4 Other Technical, Specialty, Operations and Maintenance Requirements 46

3.5 Submerged Bed Scrubber – Primary Offgas Treatment System Requirements 54
3.5.1 Mission and Functional / Performance Requirements (Including States and Modes) 54
3.5.2 Nuclear Safety, ALARA, Environmental, and Other Regulatory Requirements 54
3.5.3 System Interface Requirements 57
3.5.4 Other Technical, Specialty, Operations and Maintenance Requirements 57

3.6 High Efficiency Particulate Air Filters Treatment System Requirements 57
3.6.1 Mission and Functional / Performance Requirements (Including States and Modes) 57
3.6.2 Nuclear Safety, ALARA, Environmental, and Other Regulatory Requirements 58
3.6.3 System Interface Requirements 58
3.6.4 Other Technical, Specialty, Operations, and Maintenance Requirements 59

3.7 Mercury Mitigation Skid – Secondary Offgas Treatment System Requirements 59
3.7.1 Mission and Functional / Performance Requirements (Including States and Modes) 59
3.7.2 Nuclear Safety, ALARA, Environmental, and Other Regulatory Requirements 59
3.7.3 System Interface Requirements 61
3.7.4 Other Technical, Specialty, Operations and Maintenance Requirements 61

3.8 Exhauster Fans - Secondary Offgas Treatment System Requirements 61
3.8.1 Mission and Functional / Performance Requirements (Including States and Modes) 61
3.8.2 Nuclear Safety, ALARA, Environmental, and Other Regulatory Requirements 61

3.8.3 System Interface Requirements 63
3.8.4 Other Technical, Specialty, Operations, and Maintenance Requirements 63

3.9 Monitoring and Control Requirements 63
3.9.1 Mission and Functional / Performance Requirements (Including States and Modes) 63
3.9.2 Nuclear Safety, ALARA, Environmental, and Other Regulatory Requirements 64
3.9.3 System Interface Requirements 112
3.9.4 Other Technical, Specialty, Operations, and Maintenance Requirements 113

3.10 Other Structures, Systems, or Component Requirements 113
3.10.1 Mission and Functional / Performance Requirements (Including States and Modes) 113
3.10.2 Nuclear Safety, ALARA, Environmental, and Other Regulatory Requirements 113
3.10.3 System Interface Requirements 115
3.10.4 Other Technical, Specialty, Operations, and Maintenance Requirements 115

3.11 Dangerous Waste Permit (DWP) and Washington Administrative Code (WAC) for the LOP and LVP 121
3.11.7 LVP HEPA Preheaters 143

3.12 Relevant Codes and Standards 184
3.12.1 Codes of Record 184
3.12.2 WTP Design Criteria, Design Guides, and General Specifications 185

4 System Description 188

4.1 Configuration Information 188
4.1.1 Description of System, Subsystems, and Major Components 189
4.1.2 Boundaries and Interfaces 228
4.1.3 Physical Layout and Location 229
4.1.4 Principles of Operation 230
4.1.5 System Reliability Features 232
4.1.6 System Control Features 236

4.2 Operations 283
4.2.1 Initial Configuration 283
4.2.2 System Startup 283
4.2.3 Normal Operation 283
4.2.4 Off-Normal Operations 291
4.2.5 System Shutdown 291
4.2.6 Safety Management Programs and Administrative Controls 292

4.3 Testing and Maintenance 292
4.3.1 Safety Instrumented Functions (SIF) Testing Intervals 292

4.4 Supplemental Information 292

5 Sources, Bases, and Other References 293

5.1 Source / Basis References 293

5.2 Other References 293

5.3 System Design Documents 296

Appendices

Appendix A Test Objectives, Conditions, and Acceptance Criteria A-1

Appendix B Descriptions of System Functional Flow and Interactions B-1

Appendix C Deleted C-1

Appendix D System Procedures D-1
Appendix E System History E-1
Appendix F Programmatic F-1

Tables

Table 2-1 Functional Analysis and Crosswalk Requirements 11
Table 2-2 LOP System Interfaces 14
Table 2-3 LVP System Interfaces 15
Table 3-1 LOP and LVP Equipment and Components Design Life 20
Table 3-2 LOP and LVP Safety Functions 32
Table 3-3 LOP and LVP Seismic Equipment 39
Table 3-4 Instruments, Valves and Interlock Requiring Seismic Functionality 65
Table 3-5 LAW Melter Film Coolers Construction 121
Table 3-6 LAW Vitrification System Waste Feed Cutoff Parameters (RESERVED) 124
Table 3-7 Submerged Bed Scrubbers Construction 125
Table 3-8 LOP Scrubber Overflow Prevention Controls 127
Table 3-9 LAW Vitrification System Waste Feed Cutoff Parameters (RESERVED) 128
Table 3-10 Wet Electrostatic Precipitators Construction 129
Table 3-11 WESP Overflow Prevention Controls 131
Table 3-12 LAW Vitrification System Waste Feed Cutoff Parameters (RESERVED) 132
Table 3-13 Offgas Mercury Adsorber Construction 133
Table 3-14 LAW Vitrification System Waste Feed Cutoff Parameters (RESERVED) 135
Table 3-15 LVP Exhausters Construction 136
Table 3-16 LAW Vitrification System Waste Feed Cutoff Parameters (RESERVED) 139
Table 3-17 LVP HEPA Filters Construction 140
Table 3-18 LAW Vitrification System Waste Feed Cutoff Parameters (RESERVED) 142
Table 3-19 LVP HEPA Preheaters Construction 143
Table 3-20 LAW Vitrification System Waste Feed Cutoff Parameters (RESERVED) 146
Table 3-21 LVP Offgas Caustic Scrubber Construction 146
Table 3-22 LVP Offgas Caustic Scrubber Overflow Prevention Controls 148
Table 3-23 LAW Vitrification System Waste Feed Cutoff Parameters (RESERVED) 149
Table 3-24 Selective Catalytic Oxidizer Construction 150
Table 3-25 LAW Vitrification System Waste Feed Cutoff Parameters (RESERVED) 153
Table 3-26 Selective Catalytic Reduction Unit Construction 154

Table 3-27 LAW Vitrification System Waste Feed Cutoff Parameters (RESERVED) 156
Table 3-28 LAW Melter 1 SBS Condensate Vessel 159
Table 3-29 Melter 1 Condensate Vessel Overflow Prevention Controls 160
Table 3-30 LAW Melter 2 SBS Condensate Vessel 163
Table 3-31 Melter 2 SBS Condensate Vessel Prevention Controls 164
Table 3-32 LAW Casutic Collection Tank 167
Table 3-33 LVP Caustic Collection Tank Overflow Prevention Controls 168
Table 3-34 Seal Penetration for Room L-0304F 181
Table 3-35 LOP Bulge Secondary Containment 182
Table 3-36 LOP Bulges Sump/Floor Drain Dimensions, Construction and Design Documents 182
Table 3-37 LOP and LVP Applicable Codes and Standards 184
Table 3-38 WTP Design Guides, and General Specifications Applicable to LOP and LVP 186
Table 4-1 Not used. 228
Table 4-2 Not used. 228
Table 4-3 Film Cooler Spray and Line Spray Controls 243
Table 4-4 Bottled Air Pressure Regulation 279
Table 4-5 Purge Control Panel Pressure Regulation 280
Table F-1 Tier 1 and 2 Programmatic (Non-Design) WTP LOP/LVP System Requirements F-1

Figures

Figure 2-1 LOP System Context Diagram 6
Figure 2-2 LVP System Context Diagram 7
Figure 2-3 Functional Block Diagram 9
Figure 2-4 LOP and LVP Simplified Process Flow Diagram 10
Figure 4-1 Diagram for LOP/LVP Systems 190
Figure 4-2 Primary Film Cooler 192
Figure 4-3 Standby Film Cooler 193
Figure 4-4 Submerged Bed Scrubber Bed Distribution Plate 197
Figure 4-5 Submerged Bed Scrubber Circulation 200
Figure 4-6 Wet Electrostatic Precipitator Configuration 202
Figure 4-7 Electrode and Collector Tube Side View 203
Figure 4-8 LVP HEPA Preheater and HEPA Filter Arrangement Drawing 207
Figure 4-9 Adsorber Unit (Top View) 209
Figure 4-10 Adsorber Unit (End View) 209

Figure 4-11 Adsorber Unit (Side View)....210

Figure 4-12 Flow Diagram of the Selective Catalytic Oxidizer/Reducer and Ammonia/Air Dilution Skids....213

Figure 4-13 Selective Catalytic Oxidizer/Reducer Skid with Insulation Installed....213

Figure 4-14 Ammonia Dilution Skid General Arrangement....217

Figure 4-15 Caustic Scrubber System....219

Figure 4-16 Exhauster Diagram....223

Figure 4-17 Exhauster Skid....224

Figure 4-18 Layout of LAW Facility Wet Process Cells....229

1 Introduction

1.1 System Identification

This system design description (SDD) defines the technical, functional, and performance requirements of the Low-Activity Waste (LAW) Facility primary offgas process system (LOP) and the LAW Facility secondary offgas/vessel vent process system (LVP). This document details waste treatment requirements, environmental compliance requirements, and authorization basis requirements of the LOP and LVP systems as they are currently known and understood. This SDD describes the process and functional design requirements of the LOP and LVP systems, including the following:

- Services and utility requirements, operating materials and supplies, and other external interfaces
- Operations limits and design bases
- Other criteria and requirements pertinent to the design of the LOP and LVP systems

1.2 Limitations and Scope

The scope of this document is to provide an authoritative source for the collected set of requirements applicable to the LOP and LVP systems, inclusive of interface requirements with other systems. The DFLAW scope and associated applicable design requirements have been incorporated in Sections 1 through 3 of this document only. The SDD scope is limited to LOP and LVP system features that support production and (or) protect equipment, personnel, and the environment. The SDD is prepared in accordance with 24590-WTP-3DP-G04B-00093, *System and Facility Design Descriptions*. The intended use of these collected requirements is to establish the following:

- Inform the LOP and LVP system design effort.
- Provide a validated basis upon which to confirm implementation of design requirements.
- Provide the expected means of verification for requirements, including those that are post-construction (i.e., startup and commissioning test objectives and acceptance criteria).

All requirements established in this document are intended to be verified, implemented in the design and (or) physical configuration using a graded approach commensurate with importance and risk.

Where numeric values are provided within requirements in Section 3, these values are provided without additional margin. For example, if a value is established in 24590-WTP-DB-ENG-01-001, *Basis of Design* (BOD), no attempt is made to remove any margin that may or may not have gone into the establishment of that value, and neither has any margin been added. Where values are stated as minimums or maximums, there is no expectation that additional margin be applied in the verifications that the design requirements have been met. Testing required to be performed in accordance with external codes and standards must follow the rules established in those documents.

This document is intended to support design development, design verification, turnover, startup testing, and commissioning activities. This document will be maintained current relative to changes in source requirements documents. Updates shall be made concurrent with these changes to source requirements, or implementation shall be tracked for completion in accordance with 24590-WTP-GPG-ENG-0170, *Impact Evaluation*.

Engineers are expected to be able to use the requirements in Section 3 of this document as input for design development without recourse to the upper-tier source documents or searches of the Technical Requirements Management System supported by the Technical Requirements Search Application. Design engineers are still

required to ensure that requirements contained within the discipline and functional standards incorporated by reference in Section 3 are followed. These documents contain additional criteria that are based on the applications of external codes, standards, corporate best practices, and Engineering management expectations for a consistent approach to design.

The contents of Section 4 are being developed in a phased approach in support of future operations and maintenance. For this revision, only the contents of Sections 4.1.1 through 4.1.6, 4.2.1 through 4.2.5, and 4.5 have been updated and verified. Sections 4.2.6, 4.3, and 4.4 are preliminary during this phase and will be updated in a later phase after work to support completion of these sections has been finished.

Additional Appendices may be added in the future as needed.

1.3 Ownership and Maintenance

The Design Authority organization is responsible for the preparation and maintenance of this document through turnover of the included systems to Operations. Thereafter, maintenance of this document is the responsibility of the Plant Engineering organization; however, the Engineering Design Authority organization retains responsibility for the establishment and definition of design requirements.

1.4 Definitions/Glossary

Confinement – For consistency — regardless of usage elsewhere — *confinement* is used in this document to denote the controls used to prevent or minimize the release or migration of airborne contaminants, including aerosols, hazardous vapors, or gases.

Containment – For consistency — regardless of usage elsewhere — *containment* is used in this document to denote the controls used to prevent or minimize the release or migration of liquid or liquid-entrained contaminants.

Primary confinement and containment – The structures, systems, or components (SSC) and their associated boundaries that confine or contain airborne and liquid contaminants under normal conditions.

Secondary confinement and containment – The structures or other design features that capture and prevent further spread or migration of airborne or liquid contaminants after they have escaped primary confinement or containment.

1.5 Acronyms and System Designators

1.5.1 Acronyms

4BOB	four-bearing outboard
ADR	ALARA design review
ADS	air displacement slurry
ALARA	as low as reasonably achievable
ASD	adjustable speed drive
BACT	best available control technology
BARCT	best available radionuclide control technology
BOD	*Basis of Design*

CFR	Code of Federal Regulations
CTN	component tag number
DOE	US Department of Energy
DP	differential pressure
DRE	destruction and removal efficiency
DSA	documented safety analysis
DWP	Dangerous Waste Permit
EPC	engineering, procurement, and construction
EQP	equipment qualification package
GTC	general test criteria
HEPA	high-efficiency particulate air
HMI	human-machine interface
IQRPE	independent, qualified, registered professional engineer
NIOSH	National Institute for Occupational Safety and Health
NOC	notice of construction
NPH	natural phenomena hazard
P&ID	piping and instrumentation diagram
PCV	pressure control valve
PFD	probability of failure on demand
PM_{10}	particulate matter under 10 microns
PODC	principal organic dangerous constituent
PSV	pressure safety valve
SDD	system design description
SIF	safety instrumented function
SIR	switched integrated rectifier
SIS	safety instrumented system
SRD	Safety Requirements Document
SRVM	specialized requirements verification matrix
SS	safety significant
SSC	structure, system, or component
TAC	test acceptance criteria
T-BACT	best available control technology for toxic air pollutants
TEQ	toxicity equivalence
TSR	technical safety requirement
T-T	tank tangent
VOC	volatile organic compound
WAC	Washington Administrative Code
WPC	wet process cell
WTP	Hanford Tank Waste Treatment and Immobilization

1.5.2 WTP Designators

AMR	ammonia reagent system
C2V	C2 ventilation system

C3V	C3 ventilation system
C5V	C5 ventilation system
CHW	chilled water system
DEP	DFLAW Effluent Management Facility Process System
DFLAW	Direct Feed Low-Activity Waste
DIW	demineralized water system
EMF	Effluent Management Facility
ICN	Integrated Control Network
ISA	instrument service air system
LAW	Low-Activity Waste (Facility)
LCP	LAW concentrate receipt process system
LFP	LAW melter feed process system
LMP	LAW melter process system
LOP	LAW primary offgas process system
LVE	low-voltage electrical (480/208/120 V) system
LVP	LAW secondary offgas/vessel vent process system
PCJ	process control system
PPJ	programmable protection system
PSA	plant service air system
PSW	process service water system
PT	Pretreatment (Facility)
RLD	radioactive liquid waste disposal system
RWH	radioactive solid waste handling system
SBS	submerged bed scrubber
SCO	selective catalytic oxidizer
SCR	selective catalytic reducer
SCV	SBS condensate vessel
SDJ	stack discharge monitoring system
SHR	sodium hydroxide reagent system
TCO	thermal catalytic oxidizer
UPE	uninterruptible power electrical system
UPS	uninterruptible power supply system
WESP	wet electrostatic precipitator

2 General Overview

The LOP and LVP systems comprise the LAW offgas system. The main function of the LOP is to cool the offgas and remove aerosols and particulates generated by the melter. It also maintains the melter plenum vacuum, in conjunction with the LVP. Each LAW melter system has its own LOP treatment equipment consisting of an offgas film cooler, a submerged bed (SBS) scrubber and its condensate vessel, and a wet electrostatic precipitator (WESP). The LOP cools the melter offgas, condenses the water vapor, removes particulates, and provides the flow path so that the melter plenum vacuum is maintained.

- The function of the LVP is to provide motive force to maintain melter plenum vacuum, treat the offgas stream, and discharge the offgas to an elevated release via the offgas stack. The process starts by combining the melters' treated offgas (from the LOP) with the vessel vent stream. It is then directed through preheaters and a two-stage bank of HEPA filters. After filtration, the offgas stream enters the carbon bed adsorber units where it is treated to remove mercury, iodine and acidic gases. From there, the offgas continues to the selective catalytic oxidation (SCO)/selective catalytic reduction (SCR) units where volatile organic compounds are removed and NOx is reacted with ammonia. The offgas is then scrubbed with sodium hydroxide solution in the caustic scrubber, which neutralizes acidic gases and cools the offgas stream. Finally, the offgas stream is drawn through the exhausters, sampled, monitored, and discharged through the offgas exhaust stack.

Figure 2.1 and 2.2 provides a contextual depiction of the LOP and LVP respectively, in terms of the primary interrelationships with other systems and utilities. This diagram does not differentiate among some utilities that have both normal and safety service provisions. This diagram is used in support of functional and performance definition at the system level.

Figure 2-1 LOP System Context Diagram

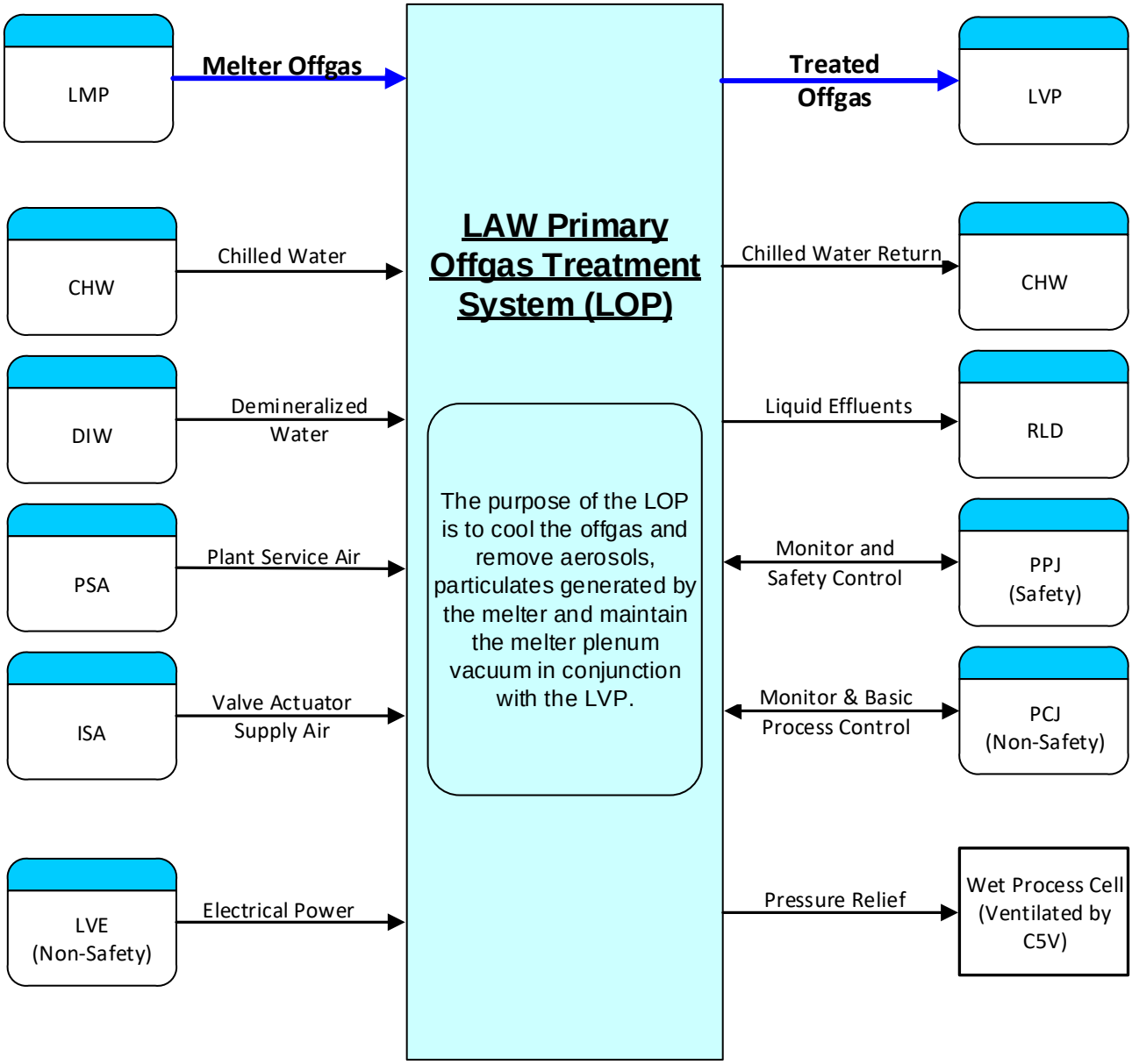

Figure 2-2 LVP System Context Diagram

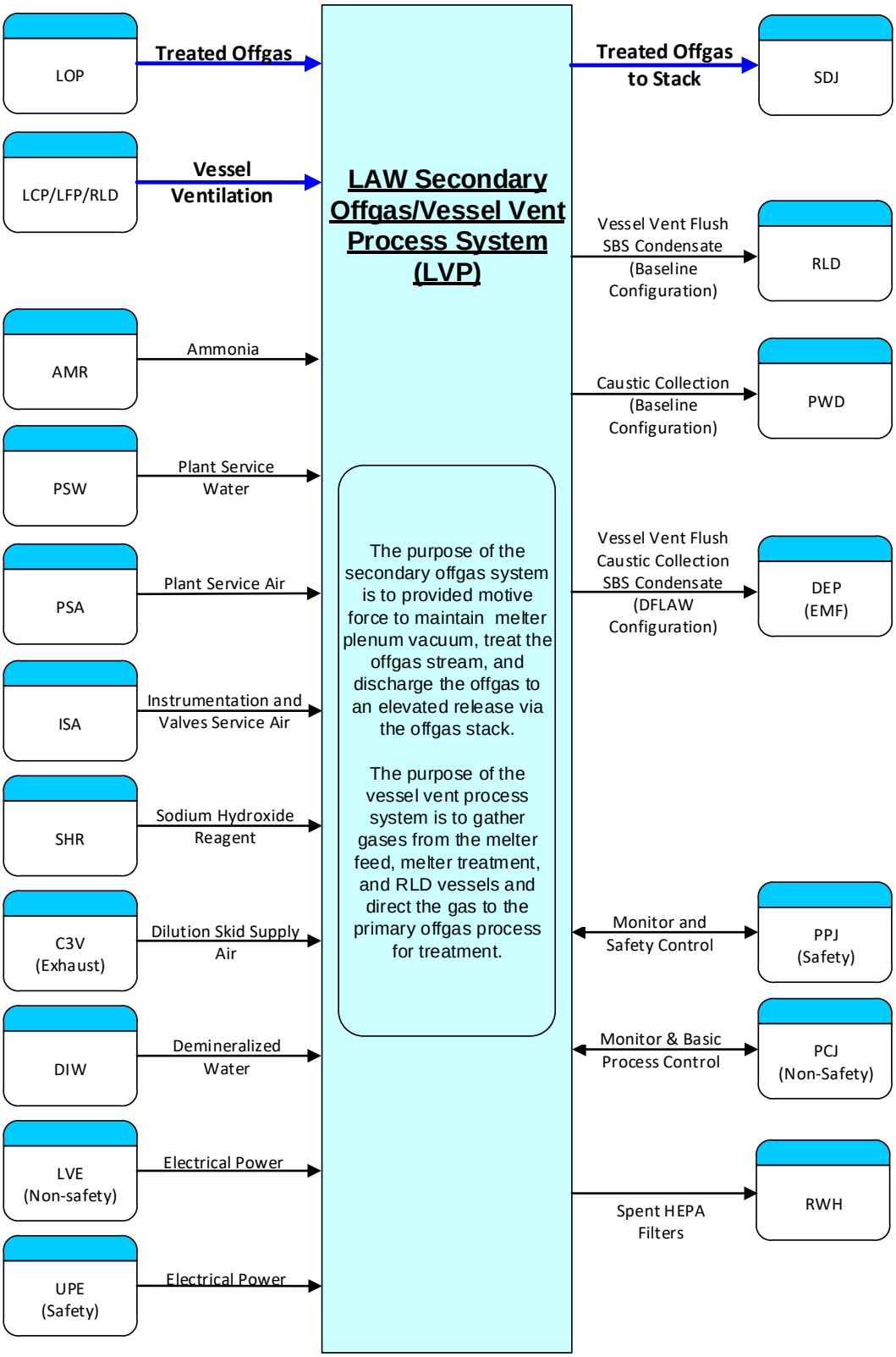

2.1 System and Safety Functions

This section defines the LOP and LVP functions and attributes that need to be addressed by the system design. Figure 2-3 provides the functional block diagram for the LOP and LVP systems, indicating the internal and external systems and utilities that provide the primary support or interface for that function. Section 3.1 provides the design and performance design requirements to meet both functional and other requirements.

System interfaces are provided for reference only. Refer to Section 1.5.2 for the list of relevant system designators.

The functions included in Figure 2-4 are the primary and secondary level functions of the LOP and LVP systems. These functions are further described in Table 2-1. Where appropriate to support definition of functional and design requirements, functions have been further decomposed and additional levels of supporting functions are also described. The requirement section number provides the location of the applicable functional analysis incorporated into system requirements.

Figure 2-3 Functional Block Diagram

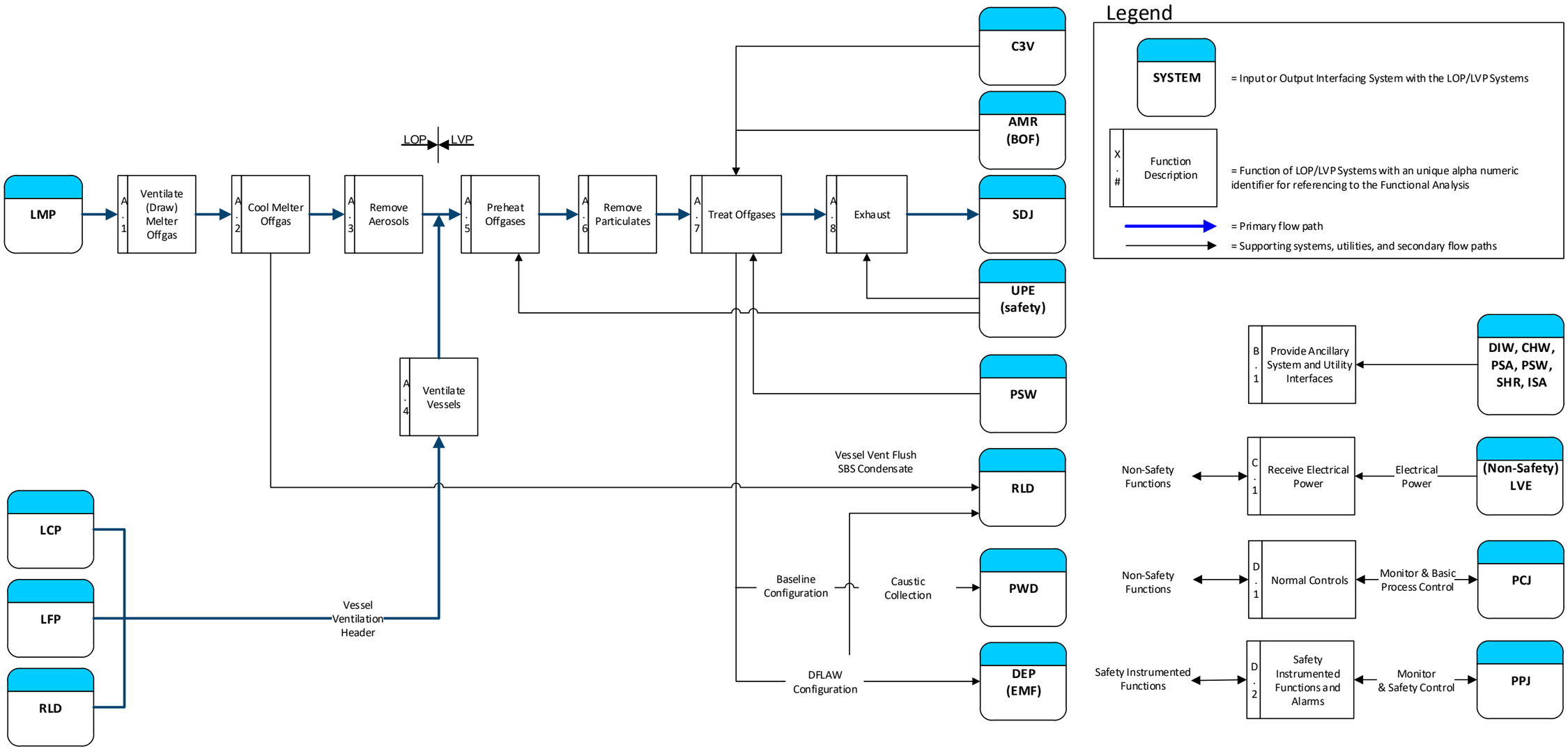

Figure 2-4 LOP and LVP Simplified Process Flow Diagram

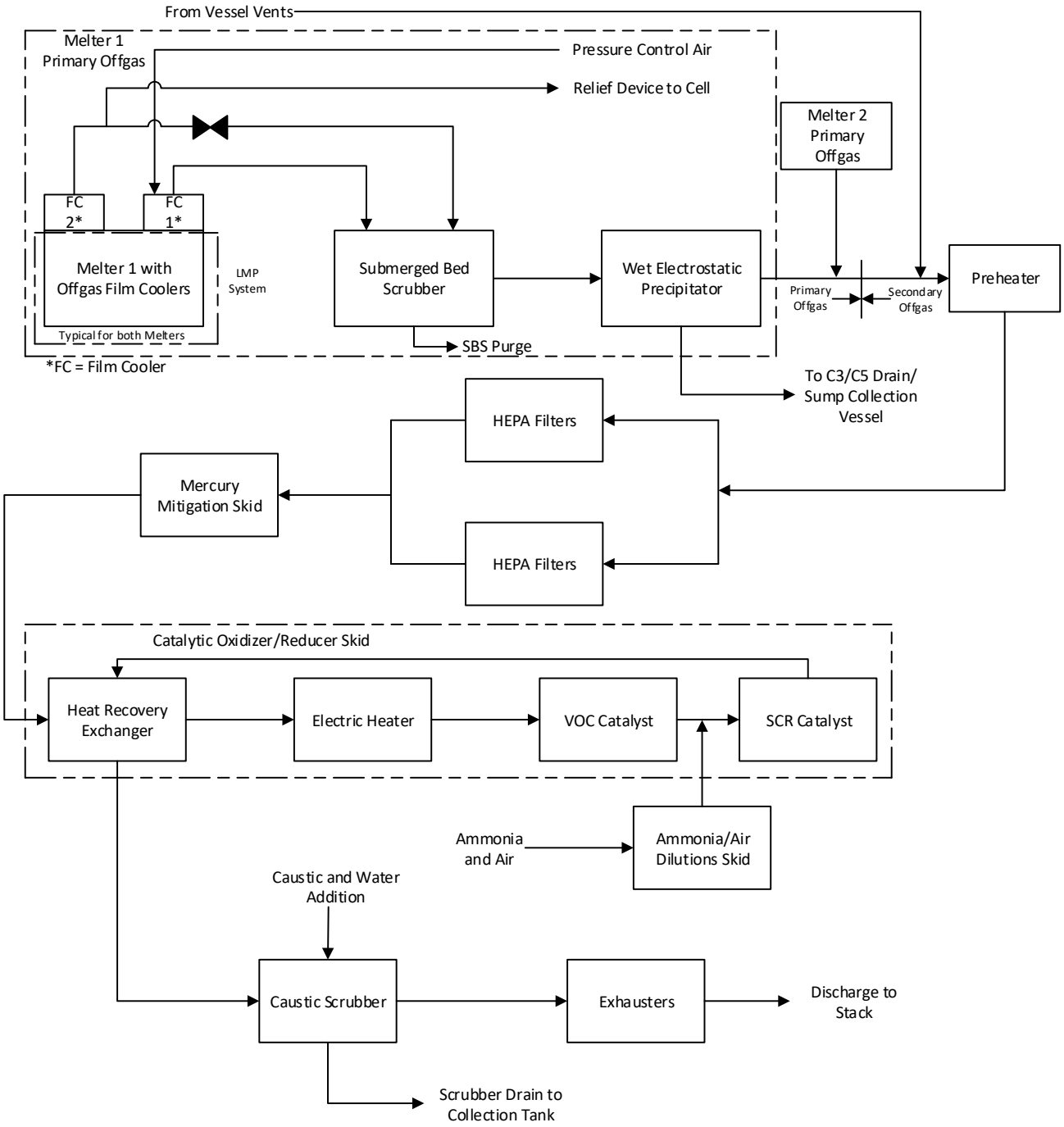

Table 2-1 Functional Analysis and Crosswalk Requirements

Reference	Functional Analysis Description	Requirement Section No.
A.	**Safely Treat Melter Offgas to Protect the Public, Environment, and Plant Personnel from Radionuclide and Chemical Exposure**	N/A
A.1	Ventilate (Draw) Melter Offgas – The LOP system draws gases from the melters, maintains a negative pressure in the melter plenums, equipment, and piping relative to adjacent areas, and it confines hazardous gases.	3.4.1.1, 3.4.2.16, 3.4.2.24, 3.4.2.26, 3.5.2.4
A.2	Cool Melter Offgas – The LOP system cools the offgas enabling subsequent treatment. Cooling is performed by the offgas film cooler and submerged bed scrubber (SBS).	3.4.2.1, 3.4.1.9
A.3	Remove Particulates and Aerosols – Remove radioactive, entrained particulates and aerosols from the offgas stream via the SBS and wet electrostatic precipitator (WESP).	3.4.1.2, 3.4.1.3, 3.4.2.1, 3.4.2.6
A.4	Ventilate Vessels – Ventilate process system vessels (LAW concentrate receipt process [LCP], LAW melter feed process system [LFP], and radioactive liquid waste disposal system [RLD]).	3.4.1.3
A.5	Preheat Offgas – Preheat offgas stream before the high-efficiency particulate air (HEPA) filters to prevent moisture condensation and subsequent blinding of the HEPA filters.	3.9.2.14.4
A.5.1	Receive Safety Power – HEPA filter preheater safety elements receive safety UPE power to maintain confinement and prevent moisture condensation and subsequent blinding of the HEPA filters during a loss of power event.	N/A
A.6	Remove Particulates – Remove radioactive, entrained particulates from the offgas stream via HEPA filters.	3.4.2.1, 3.4.2.3, 3.4.2.5, 3.4.2.6
A.7	Treat Offgas – Treat offgas to remove principal organic dangerous constituents (PODC) and hazardous emissions in accordance with permit PSD-02-01, *Technical Support Document for Prevention of Significant Deterioration (PSD) Permit – Hanford Waste Treatment Plant* (PSD Air Permit).	3.4.1.2, 3.4.1.3, 3.4.2.1, 3.4.2.2, 3.4.2.3, 3.4.2.4, 3.4.2.7, 3.4.2.8, 3.4.2.9, 3.4.2.10, 3.4.2.11, 3.4.2.12, 3.4.2.13, 3.4.2.14
A.8	Exhaust – The LOP and LVP systems maintain all components at a lower pressure relative to the room or gallery in which they reside. One set of fans and air injection provide the motive force for the elevated release of offgas through the exhaust stack.	3.4.1.7, 3.10.2.1, 3.4.2.26, 3.8.2.1
A.8.1	Receive Safety Power – Offgas exhauster fans receive safety UPE power to maintain offgas at a negative pressure for confinement during a loss of site power.	N/A
B.	**Ancillary Systems**	N/A
B.1	Ancillary Systems – Ancillary systems provide support to LOP and LVP.	N/A
C.	**Electrical Power**	N/A
C.1	Receive Electrical Power – The non-safety low-voltage electrical (480/208/120 V) system (LVE) provides electrical power to the nonsafety LOP/LVP equipment and instruments.	N/A
D.	**Support Monitoring, Control, and Communication Functions**	N/A
D.1	Process Control System (PCJ) – Normal controls. The nonsafety LOP/LVP processes support monitoring and control communications.	3.9.2.12, 3.9.2.13, 3.9.3.1

Table 2-1 Functional Analysis and Crosswalk Requirements

Reference	Functional Analysis Description	Requirement Section No.
D.2	Programmable Protection System (PPJ) – Safety instrumented functions and alarms. • Film Cooler Outlet High Temperature Interlock • WESP High Liquid Level Interlock • SBS High Level Interlock • SBS Low Level Interlock • HEPA Preheaters Outlet High Temperature Interlocks • Melter Offgas System (High Differential CO) Interlock • Catalytic Oxidizer/Reducer Skid Heater Interlock • Thermal catalytic oxidizer (TCO) Skid Outlet High Temperature Interlock • Ammonia High Flow Interlock • Ammonia Dilution Air Flow Interlock • Caustic Scrubber Low Recirculation Pressure Interlocks • Caustic Scrubber Loss of Cooling Interlocks • Caustic Scrubber Low Water Supply Pressure Interlock • LVP Header High/Low Pressure Interlock • Offgas Exhauster 1A/1B/1C Shaft Seal Air Supply Low Pressure Interlock • Exhauster 1A/1B/1C Shaft Seal Low Pressure Interlock • LMP Melter Plenum High Pressure Interlock • UPE Loss of Normal Power Interlock (Exhausters)	3.9.2.2.1 3.9.2.2.2 3.9.2.2.3.1, 3.9.2.2.3.23.9.2.2.4.1, 3.9.2.2.4.2 3.9.2.3.1.1, 3.9.2.3.1.23.9.2.4.3 3.9.2.5.2 3.9.2.5.3.1, 3.9.2.5.3.2 3.9.2.5.5 3.9.2.5.6 3.9.2.6.2 3.9.2.6.3 3.9.2.6.6 3.9.2.7.1.1, 3.9.2.7.1.2, 3.9.2.7.1.3, 3.9.2.7.1.4, 3.9.2.7.1.5 3.9.2.8.1.1, 3.9.2.8.1.2 3.9.2.8.4 3.9.2.9.1 3.9.2.10.1.1, 3.9.2.10.1.2, 3.9.2.10.1.3, 3.9.2.10.1.4, 3.9.2.10.1.5

2.2 System Classification

The LOP and LVP vent systems contain components with the following classifications/designations:

- ☐ Safety class
- ☒ Safety significant
- ☒ Dangerous Waste Permit affecting
- ☒ Air Permit affecting
- ☐ Waste acceptance impacting
- ☒ General

2.3 Basic Operational Overview

A functional description of the system is provided in Sections 2 and 2.1, which provide the context diagram for the system, interfaces with other systems, a simplified system diagram, a functional block diagram, and descriptions of the system functions. Detailed operational information is provided in Section 4.

The LOP and LVP systems are located in the LAW Facility. While WTP is operating in either the baseline or DFLAW configurations, the LOP system is the primary offgas treatment system. The offgas stream leaving the melter first enters a film cooler to cool the offgas stream in preparation for future processing. The offgas stream then enters a submerged bed scrubber (SBS) unit, used to cool, remove condensables, aerosols, and entrained particulates from the offgas stream. The liquid from the SBS overflows to the SBS condensate collection vessel (SCV). The SCV liquid is recirculated using pumps, with a fraction of the recirculated liquid flowing through mixing lances in the SBS and the remainder of the recirculated liquid flowing through a mixing eductor in the SCV. Liquid and entrained solids are periodically transferred from the SCV and SBS to the radioactive liquid waste disposal system (RLD). The offgas stream continues to the WESP, which allows for further particulate removal. The liquid waste from the WESP is transferred to the C3/C5 drains/sump collection vessel in the LAW RLD system.

After treatment in the WESP, the offgas stream then continues to the LAW LVP system. The offgas stream first enters a preheater unit to increase the temperature thereby, ensuring the offgas is not saturated before entering the high efficiency particulate air (HEPA) filters. The HEPA filters then remove particulate from the offgas stream. Upon exiting the HEPA filters, the offgas stream is sent to a mercury adsorber skid, which uses activated carbon to remove mercury, acid gases (halides), and iodine for the control of emissions. The offgas stream proceeds to a SCO skid, where platinum-based material deposited on a cordierite ceramic monolith is used as the catalyst to oxidize organic compounds and carbon monoxide to water vapor and carbon dioxide. Ammonia vapor is then injected into the offgas stream, and when passed through the selective catalytic reducer (SCR) catalyst, vanadium/titanium-based material deposited on cordierite ceramic converts nitrogen oxide gases into nitrogen gas and water. Finally, the offgas stream enters a caustic scrubber unit to further reduce acid gas levels. The caustic scrubber unit also cools the offgas stream, which is then exhausted from the building stack by turbine exhausters. The liquid effluents from the caustic scrubber are collected in the caustic collection vessel and transferred to the RLD system within the PT Facility.

While operating in the DFLAW configuration, all primary and secondary melter offgas treatment follows the same process as in the baseline configuration, except for two differences related to interfacing systems. The liquid effluents from the SBS and WESP are still collected in the RLD system within the LAW Facility, but are transferred to the evaporator feed vessel in the effluent management facility (EMF). The liquid effluents from the caustic scrubber unit are still collected in the caustic collection vessel, but are transferred to the overhead

sampling vessels within the DFLAW EMF process system (DEP) instead of the RLD vessels within the PT Facility. Routing of the secondary effluents produced by the LOP/LVP systems to EMF supports operation of the LAW Facility in DFLAW configuration.

The LOP/LVP systems protect the public, co-located worker, facility worker, and environment from radionuclide and chemical exposure by confining and removing hazardous radioactive and chemical components from the melter and vessel ventilation offgas. Compliance with offgas environmental treatment requirements is achieved before release from a LAW Facility stack. The LOP/LVP systems also confine chemical gases and contains hazardous liquids in the offgas treatment process. Compliance with environmental monitoring and reporting is provided through the stack discharge monitoring system (SDJ).

The following table identifies the interfaces and boundaries with other systems. This information is based on existing design, where possible, to provide a greater level of detail. Refer to Section 1.5.2 for the list of relevant system designators.

Table 2-2 LOP System Interfaces

System	Interface	Boundaries
CHW	SBS cooling jackets and coils receive and return chilled water. SCV jackets receive and return chilled water.	Manual isolation valves on CHW supply manifold. Temperature control valves on CHW return lines (LOP-TV-1013A and LOP-TV-2013A for SBS coils, LOP-TV-1013B and LOP-TV-2013B for SBS jackets, LOP-TV-1015/2015 for SCV jackets)
DIW	Primary and standby offgas film coolers, SBSs, SCVs, SBS condensate purge pumps, WESPs flush and misters, and valve bulges receive demineralized water.	Manual isolation valves on DIW supply lines to film coolers. Manual isolation valves on DIW manifolds to SBS and SCV wash ring supply lines. Manual isolation valves on DIW manifolds to SBS condensate purge pump priming lines. Manual isolation valve on DIW manifold to valve bulge LOP-BULGE-00002. Safety significant (SS) isolation valve LOP-YV-1061 on DIW line to LOP-WESP-00001. SS isolation valve LOP-YV-2061 on DIW line to LOP-WESP-00002.
ISA	Valve actuators and instrument sensing lines receive air.	ISA isolation valves to the instruments/instrument racks and the valve actuators.
LMP	LOP/LVP system draws on and confines the offgas from the melters.	Interface at melter shell and film coolers.
LVE	SBS water purge pumps, SBS condensate purge pumps, WESPs, and motor powered valves receive low voltage power.	LOP-HTR-00001/-00002 LOP-PMP-00001/-00002 LOP-PMP-00003A/B LOP-PMP-00004/-00005 LOP-PMP-00006A/B Reference: 24590-LAW-E8-LVE-00001, *LAW 480V Electrical Load List*

System	Interface	Boundaries
LVP	The two LOP trains feed offgas through the flow control valves downstream from the WESPs to the LVP portion of the offgas system.	The two 10 in. LOP offgas lines combine to form the 18 in. LVP header, upstream from the HEPA preheaters.
PCJ	Components without active safety instrumented functions receive control signals.	Signal output from non-safety sensing instruments
PPJ	Components with active safety instrumented functions receive control signals.	Signal output from safety sensing instruments
PSA	Primary and standby offgas film coolers, and WESP purge air heaters receive plant service air.	Manual isolation valves on PSA manifolds to the film coolers. Restriction orifices LOP-RO-00001/00002 on PSA lines to LOP-WESP-00001/00002, upstream from heaters LOP-HTR-00001/00002.
RLD	SBS water purge pumps and SBS condensate purge pumps transfer condensate to RLD-VSL-00005. Valve bulge LOP-BULGE-00001/00002 sumps drain by gravity to RLD sumps. WESPs drains go to RLD-VSL-00004. Process vessel vent low point drains by gravity to RLD-VSL-00004.	The SBS water purge and condensate purge lines transition from LOP to RLD designation at actuated plug valves inside valve bulges LOP-BULGE-00001/00002. Valve bulge drains transition from LOP to RLD designation at the RLD sump. WESP and vessel header drains are considered LOP piping in C1/C2 areas where the piping is double walled. Transition to RLD designation occurs inside C5 room L-B0001B, where pipe is single-walled.
RWH	SBSs, SCVs, and WESPs supply equipment for removal and packaging (maintenance only).	Rigging to LOP equipment or waste package in the process cell.

Table 2-3 LVP System Interfaces

System	Interface	Boundaries
AMR	Ammonia/air dilution skid (LVP-SKID-00003) receives ammonia.	Manual isolation valve (AMR-V11153) on the AMR line to the skid; valve to be located as close as possible to the skid, within the confines of the room (room L-0322A).
C2V	Caustic Collection Vessel LVP-TK-00001 vents to the C2V system.	At discharge from vent pipe to C2 intake grill.
C3V	Ammonia/air dilution skid receives C3 air.	At flange connecting C3V supply duct and skid air intake pipe.
DEP (EMF)	Caustic blowdown from LVP-TK-00001 goes to the DEP system.	Underground, encased piping is LVP designation. Transition to the DEP system occurs in drain cell inside the EMF.
DIW	Vessel vent header receives flush water.	Manual isolation valve, plant wash manifold.
ISA	Instrumentation purge lines, valve actuators, exhauster shaft seals receive air.	ISA isolation valves to the instruments/instrument racks and the valve actuators.

System	Interface	Boundaries
		For exhauster shaft seal air, isolation valves on the 1 in. ISA lines to each exhauster room define the boundary between the two systems. The ½ tubing to the exhauster seals is LVP.
LCP	Vessel vent header receives vessel vents from LCP vessels	At nozzles on LCP vessels LCP-VSL-00001/00002.
LFP	Vessel vent header receives vessel vents from LFP vessels	At nozzles on the LFP vessels LFP-VSL-00001/00002/00003/00004.
LOP	LVP HEPA filter preheaters receive primary offgas from LOP.	The two 10 in. LOP offgas lines combine to form the 18 in. LVP header, upstream from the HEPA preheaters.
LVE	Catalytic oxidizer electric heater, ammonia dilution fans, caustic scrubber recirculation pumps, caustic blowdown transfer pumps, and motor operated valves receive low voltage power.	LVP-EXHR-00001A/B/C LVP-FAN-00001/00002 LVP-HTR-00001A LVP-HTR-00002 LVP-HTR-00003A LVP-PMP-00002A/B LVP-PMP-00003A/B Reference: 24590-LAW-E8-LVE-00001, *LAW 480V Electrical Load List*
PCJ	Components without active safety instrumented functions receive control signals.	Signal output from non-safety sensing instruments
PPJ	Components with active safety instrumented functions receive control signals.	Signal output from safety sensing instruments
PSW	Supplies water for the caustic scrubber spray nozzles, for cooling offgas and cleaning packing and demisters.	Isolation valve between PSW line and water supply line to caustic scrubber, upstream of safety isolation valve YV-0201.
RLD	Vessel vent header receives vessel vents and supplies drains to RLD. RLD receives SBS condensate via valve bulges LVP-BULGE-00001/00002. Berm surrounding caustic collection tank (LVP-TK-00001) drains to RLD.	Vent line boundary is at nozzle on RLD vessels. The vessel vent header drain line boundary also transitions at the nozzle on the RLD vessel. Actuated valves inside LVP-BULGE-00001/00002 define the boundary between LVP condensate lines and the RLD system. Normally closed manual isolation valve on the drain line from the caustic collection vessel berm forms the boundary between LVP/RLD.
RWH	HEPA filters, mercury adsorbers, and SCO/SCR supply spent filter media, activated carbon media, volatile organic compound (VOC) catalyst, and SCR catalyst for removal and packaging (maintenance only).	Rigging to LVP equipment or waste package in the process cell.
SDJ	Monitors stack exhaust in conformance with permit requirements.	SDJ sample/return lines connect to nozzles on the offgas piping downstream from the exhausters. The nozzles form the boundary between the two systems.

System	Interface	Boundaries
SHR	Sodium hydroxide is added to the caustic blowdown transfer pump to neutralize the acid gases.	Manual isolation valve on SHR line feeding the intake line to LVP-PMP-00002A/00002B.
UPE	HEPA filter preheaters and exhausters receive safety uninterruptible power.	Motor control center.

3 Design Requirements

3.1 Requirements

Requirements are documented in Section 3. Each requirement statement is accompanied by a basis discussion (as needed) and the expected means of verification. Requirements must be met in design. If a requirement stated in this document cannot be met in design, a revision to the requirement needs to be pursued, if possible, or the design must be changed to meet the requirement.

Requirements preceded by "**[HOLD]**" notation may only be used in support of preliminary or committed design, which shall also be issued with appropriate holds per procedure 24590-WTP-3DP-G04B-00046, *Engineering Drawings*. These requirements may not be used in support of fabrication or construction.

The following abbreviations are used to designate the selected method for verification (refer to 24590-WTP-3DP-G04B-00092, *System Verification*, for additional guidance concerning methods of verification):

(A) Analysis
(I) Inspection
(R) Review
(T) Test

The following abbreviations are used to designate the organization responsible for performing the verification:

(COM) Commissioning
(CON) Construction
(ENG) Engineering
(IQRPE) Independent Qualified Registered Professional Engineer
(SU) Startup
(SUP) Supplier
(SUB) Subcontractor
(SQR) Supplier Quality Representative
(REC) Receiving
(ENV) Environmental Permitting

3.2 Bases

Basis discussions are provided as needed to explain the decomposition or interpretation from the originating source requirement(s). Where a **[HOLD]** has been applied to a requirement, this section will include the basis for the "HOLD."

3.3 References

The requirements include a source document reference. Each unique source document reference is bracketed separately. Requirements may include a reference to Section 2.1 listed in parentheses following the source document. A complete listing of all source references is provided in Section 5.1.

3.4 General Requirements

3.4.1 Mission and Functional / Performance Requirements (Including States and Modes)

3.4.1.1 System Confinement

Requirement: The LOP and LVP shall be designed to serve as the melter offgas primary confinement system. Each LAW melter shall have a dedicated offgas system and shall be combined downstream of the WESP. The melter offgas system shall maintain a negative pressure within the melter with respect to the surrounding environment. [Sections 12.3.1.1, 15.3.3, BOD] (A.1)

Basis Discussion: Offgas is confined from the co-located worker and the surrounding environment while the offgas is being treated. [ALARA]

Verification: Verification is expected to be achieved through the following:

Verif. Method	Verif. By	Plan	Notes/Comments
R	**ENG**	Review the design to verify the boundary of the LOP/LVP primary confinement system.	

3.4.1.2 Primary Offgas Process System Configuration

Requirement: The LOP system shall be designed to remove particulate matter and acid gases that carry over from the melter using wet scrubbing and electrostatic precipitation. [Sections 6.1.2, 15.3.3, BOD] (A.3, A.7)

Basis Discussion: The offgas system components are considered the primary pollution abatement system for hazardous constituents in the melter offgas. [ALARA]

Verification: Verification is expected to be achieved through the following:

Verif. Method	Verif. By	Plan	Notes/Comments
A	**ENG**	Perform an analysis to verify the ability of the system to remove particular matter and acid gases.	May be documented in assessment/evaluation report.
R	**ENG**	Review design to verify the ability of the system to remove particulates and acid gases.	

3.4.1.3 System Configuration Secondary Offgas/Vessel Vent Process

Requirement: The LVP system shall be designed to combine the primary LOP streams and the process system's vessel header. The LVP stream is then HEPA filtered, and further treated to destroy or remove the offgas constituents of mercury, organic compounds, oxides of nitrogen, iodine, and acid gases. [Section 6.1.2, BOD] (A.3, A.4, A.7)

Basis Discussion: The offgas system components is considered the primary pollution abatement system for hazardous constituents in the melter offgas.

Verification: Verification is expected to be achieved through the following:

Verif. Method	Verif. By	Plan	Notes/Comments
A	**ENG**	Perform an analysis to verify the ability of the system to remove or destroy mercury, organic compounds, and oxides of nitrogen, iodine, and acid gases.	May be documented in assessment/evaluation report.
R	**ENG**	Review design to verify the ability of the system to remove or destroy mercury, organic compounds, and oxides of nitrogen, iodine, and acid gases.	

3.4.1.4 Room Environment Conditions for Safety Structures, Systems, or Components

Requirement: The safety equipment in the LAW Facility LOP and LVP systems credited with any safety function(s) shall be designed and qualified to function as intended in the environments associated with the events for which they are intended to respond. Environmental qualification shall be to IEEE 323-83. The effects of aging on normal and abnormal functioning shall be considered in design and qualification using IEEE 323-83. For LBL Facilities only SS SSCs required to operate in harsh environments and credited for radiological and/or chemical hazards require qualification to IEEE 323-83. [Safety criteria 4.1-3, 4.4-1, 24590-WTP-SRD-ESH-01-001-02, *Safety Requirements Document Volume II* (SRD)][Section 11.7.3, BOD][Section 11.16, ORD]

Basis Discussion: The SSCs designated as SS are designed and qualified to perform their safety function(s). The effects of aging on normal and abnormal functioning are considered in design and qualification. Datasheet 24590-LAW-U0D-W16T-00001, *LAW Room Environment Datasheet*, identifies environmental conditions for rooms that house safety SSCs.

Verification: Verification is expected to be achieved through the following:

Verif. Method	Verif. By	Plan	Notes/Comments
A/T	**ENG**	Perform analysis or testing to verify the ability of the SSCs credited with a safety function to withstand the environmental conditions for which they are intended to respond	
R	**ENG**	Review the design to verify that SS SSCs required to operate in harsh environments are environmentally qualified to IEEE 323-83 inclusive of the effects of aging on normal and abnormal functioning.	
R	**ENG**	Review the design to verify conformance to the as-tested or as-analyzed configuration.	

3.4.1.5 Design (Operating) Life

Requirement: Non-replaceable, permanent LOP and LVP Plant equipment shall be designed to last the life of the facility (40 years), inclusive of maintenance. Selection of materials of construction for design life shall consider the effects of chemical, radiological, and thermal exposure. Items listed in Table 3-1 are integral to the melter and have expected design life of 5 years. [Sections 11.1.1, 11.7.4, 11.8.3, 15.3.1, BOD][Sections 14.1, 14.2, ORD]

Table 3-1 LOP and LVP Equipment and Components Design Life

Equipment/Component Description	Design Life (Years)
Film cooler	>5
Damper internals	>5
Jumpers inclusive of in-line components (mechanical, instrument air, and electrical)	Target design life >5

Basis Discussion: Each melter has a minimum 5-year design life. Equipment for which premature failure or need for replacement could lead to shutdown of the melter system shall be designed for a minimum service life of 5 years to allow for replacement during melter outages. Equipment and material selection is based on proven performance, value engineering principles, and fit-for-function principles. Equipment design needs to consider the routine environmental exposures under normal operations for non-safety equipment; safety and PAM equipment also considers abnormal and emergency exposures—this minimizes the need for equipment maintenance, exposure, and radiological waste generation in radiological areas. [ALARA]

Verification: Verification is expected to be achieved through the following:

Verif. Method	Verif. By	Plan	Notes/Comments
R	**ENG**	Review design to verify design life of non-replaceable, non-maintainable SSCs.	May be documented in an assessment/evaluation. Safety and PAM SSCs are to be verified through review of the equipment qualification packages.

3.4.1.6 Materials of Construction and Erosion/Corrosion Design Parameters

Requirement: The LOP and LVP systems shall be designed to include adequate allowance for erosion/corrosion and use materials of construction in accordance with Appendix H of the SRD. [Sections 11.9, 15.3.1, 16.4.1.4, BOD[Appendix H, Section 5, SRD][Sections III.10.H.1.a.viii, III.10.E.3.e, DWP]

Basis Discussion: The allowance for erosion/corrosion and applicable materials of construction is limited to those components that contact the process fluids and is required to maintain confinement of those process fluids. Materials of construction that can withstand the erosive/corrosive LAW effluents and chemicals are selected. The materials for the LAW Facility LOP and LVP system equipment and components are selected based on the stream data presented in the process corrosion datasheet report. If flushing or washing via internal spray mechanisms is needed to prevent or minimize corrosion, the operational limitations are identified in the corrosion evaluation. For the fluid characteristics of the process streams, refer to Appendix B, Tables B-25 to B-28; 24590-WTP-DB-PET-09-001, *Process Inputs Basis of Design (PIBOD)*; and 24590-WTP-RPT-PR-04-0001-04, *WTP Process Corrosion Data-Volume 4*.

The LOP and LVP system piping and vessel are accounted for in the erosion/corrosion analyses and are fabricated with materials of construction that can withstand the radioactive, thermal, and erosive/corrosive environment caused by the material.

Verification: Verification is expected to be achieved through the following:

Verif. Method	Verif. By	Plan	Notes/Comments
A/R	**ENG**	Perform an analysis/review of materials used in the LAW Facility LOP and LVP systems that are in contact with, and are required to maintain confinement or containment of, the process fluids to verify that they are acceptable for use in their operating environment and have adequate erosion/corrosion allowances.	Details of the allowed materials and corrosion allowances can be found in the following documentation: • 24590-LAW-N1D-LOP-00001, *LOP-SCB-00001 & LOP-SCB-00002 - Melter 1 and Melter 2 Submerged Bed Scrubbers (SBS)* • 24590-LAW-N1D-LOP-00002, *LOP-VSL-00001 & LOP-VSL-00002 - Melter 1 & Melter 2 SBS Condensate Vessel* • 24590-LAW-N1D-LOP-00003, *LOP-WESP-00001 & LOP-WESP-00002 (LAW) - Melter 1 and Melter 2 Wet Electrostatic Precipitator (WESP)* • 24590-LAW-N1D-LOP-00004, *LOP-Offgas Piping (Downstream of Film Cooler to SBS Entry)* • 24590-LAW-N1D-LOP-00006, *LOP-PMP-00001&2&4&5 - Melter 1 & 2 SBS Condensate Purge Pumps* • 24590-LAW-N1D-LOP-00007, *LOP-PMP-00003A/B & LOP-PMP-00006A/B - Melter 1 & 2 SBS Water Purge Pump – Primary & Standby* • 24590-LAW-N1D-LVP-00001, *LVP-SCB-00001 - LAW Melter Offgas Caustic Scrubber* • 24590-LAW-N1D-LVP-00002, *LVP-TK-00001 - Caustic Collection Tank* • 24590-LAW-N1D-LVP-00003, *LVP-EXHR-00001A/B/C - Melter Offgas Exhauster* • 24590-LAW-N1D-LVP-00004, *LVP-ADBR-00001A/B - Activated Carbon Bed Adsorber* • 24590-LAW-N1D-LVP-00005, *LVP-HX-00001 - Catalytic Oxidizer Heat Recovery Exchanger* • 24590-LAW-N1D-LVP-00006, *LVP-HTR-00002 - Catalytic Oxidizer Electric Heater* • 24590-LAW-N1D-LVP-00007, *LVP-SCO-00001 - Thermal Catalytic Oxidizer* • 24590-LAW-N1D-LVP-00008, *LVP-SCR-00001 - NOx Selective Catalytic Reducer*

Verif. Method	Verif. By	Plan	Notes/Comments
			• 24590-LAW-N1D-LVP-00009, *LVP-HTR-00001A/B & LVP-HTR-00003A/B - Melters Offgas HEPA Preheater*
R	**ENG**	Review design to verify components used in the LAW Facility LOP and LVP systems that are in contact with and are required to maintain confinement or containment of the process fluids for concurrence with analysis.	

3.4.1.7 Vessel Vent and Melter Offgas Discharge Flue

Requirement: The LOP and LVP system discharge air shall be routed through a dedicated flue. [Section 12.5.6, BOD] (A.8)

Basis Discussion: To preserve the vacuum in the LVP relative to the surrounding environment, offgas from LVP is discharged in a dedicated flue in the stack structure also containing C1V, C2V, C3V, and C5V flues. The independent flues provide a means to determine what system a release would be emanating from. [ALARA]

Verification: Verification is expected to be achieved through the following:

Verif. Method	Verif. By	Plan	Notes/Comments
R	**ENG**	Review design to verify LOP and LVP discharge air is routed through a dedicated flue.	

3.4.1.8 Main and Standby Offgas Line

Requirement: The LOP system shall provide a main and standby offgas line for each melter. The lines shall be designed to accommodate anticipated melter in-leakage, purge streams, and variations in feed offgas production rates. [Section 15.3.3, BOD]

Basis Discussion: The main offgas line is used for normal operations. The standby offgas line is used to mitigate pressure excursions in off normal conditions. [ALARA]

Verification: Verification is expected to be achieved through the following:

Verif. Method	Verif. By	Plan	Notes/Comments
R	**ENG**	Review design to verify the LOP system supplies a main and standby offgas line for each melter.	

3.4.1.9 Film Coolers

Requirement: The LOP system shall provide a film cooler on each main offgas line. The film cooler shall be integral to the melter design. The film cooler design and configuration shall reduce the offgas temperature and minimize solids deposition during the various modes of operation to support downstream offgas system operation. [Section 15.3.3, BOD] (A.2)

Basis Discussion: The film coolers are integral to the melter design but are included in the LOP system because they provide the first step of offgas processing.

Verification: Verification is expected to be achieved through the following:

Verif. Method	Verif. By	Plan	Notes/Comments
R	**ENG**	Review design to verify each melter has a main offgas line that contains a film cooler capable of reducing the offgas temperature and minimizing solids deposition during the various modes of operation to support downstream offgas system operation.	

3.4.2 Nuclear Safety, ALARA, Environmental, and Other Regulatory Requirements

3.4.2.1 Demonstration of Best Available Radionuclide Control Technology

Requirement: The LOP and LVP systems shall use and demonstrate the best available radionuclide control technology (BARCT), as discussed in *Washington Administrative Code* (WAC) 246-247-040, *Radiation Protection—Air Emissions – General Standards*. [Section 14.3.1, BOD][Emission Unit 547, NOC 1057][Section C.7(d)(3)(iv), WTP Contract] (A.2, A.3, A.6, A.7)

Basis Discussion: In accordance with notice of construction (NOC) 1057, *Radioactive Air Emissions Notice of Construction for the WTP LAW Vitrification Plant* (LV-S3-04), the Washington State Department of Health has determined that the BARCT for emission unit LV-S3 (LAW) is a system comprising the following control technology, ancillary equipment, protective features, and protective equipment, in the following order: a film cooler, an SBS, a WESP, an injection of air delivered through a vessel vent header, a heater, two stages of HEPA filtration in series, carbon bed adsorber, and C3 dilution air HEPA filter for the non-BARCT selective catalytic reduction unit ammonia injection system and exhaust fans. Control technologies for operation of the LAW emission unit that are not regulated by this license (located between the carbon bed adsorber and the stack) are a heat exchanger, a heater, a catalytic oxidizer, and two SCR units. Offgas is then routed back through the heat exchanger and a caustic scrubber. [ALARA]

Verification: Verification is expected to be achieved through the following:

Verif. Method	Verif. By	Plan	Notes/Comments
R	**ENG**	Review the design and vendor data to verify conformance with the BARCT requirements in the NOC Air Permit.	May be documented in assessment/evaluation report.

3.4.2.2 Demonstration of Best Available Control Technology

Requirement: The design of the WTP offgas systems must demonstrate best available control technology (BACT) for the criteria pollutants, as specified in WAC 173-400, *General Regulations for Air Pollution Sources*. [Sections 14.4.1, 14.4.2.4, 14.4.4, BOD][Section C.7(d)(3)(iv), WTP Contract][Approval Conditions 16, PSD-02-01, PSD Air] (A.7)

Basis Discussion: In accordance with permit PSD-02-01, *Technical Support Document for Prevention of Significant Deterioration (PSD) Permit – Hanford Waste Treatment Plant* (PSD Air Permit), selective catalytic

reduction has been determined to be BACT for the control of nitrogen oxide emissions from the LAW Facility. [ALARA]

Verification: Verification is expected to be achieved through the following:

Verif. Method	Verif. By	Plan	Notes/Comments
R	**ENG**	Review the design and vendor data to verify conformance with the BACT requirements in the PSD Air Permit.	May be documented in assessment/evaluation report.

3.4.2.3 Demonstration of Best Available Control Technology for Toxic Air Pollutants

Requirement: The design of the WTP offgas systems must also demonstrate BACT for toxic air pollutants, as specified by WAC 173-460, *Controls for New Sources of Toxic Air Pollutants*. A new source that is likely to increase toxic air pollutant emissions shall not be established or operated without installing and operating best available control technology for toxic air pollutants (T-BACT) (WAC 173-460-060, *Controls for New Sources of Toxic Air Pollutants – Control Technology Requirements*). The toxic air pollutants that have been determined to be applicable to WTP are listed in the DOE Notice of Construction (NOC) Approval Order No. DE02NWP-002. [Sections 14.4.2.4, 14.4.3.1, 14.4.3.2, 14.4.3.3, 14.4.4, BOD][Section C.7(d)(3)(iv), WTP Contract][Findings 23, 26, 27, 29, Non-rad NOC] (A.6, A.7)

Basis Discussion: In accordance with the DOE NOC Approval Order No. DE02NWP-002:

- **T-BACT for Particulates and Aerosols:** HEPA filters with a removal efficiency of 99.95% for single-stage filtration and 99.9995% for two-stage filtration are T-BACT for the control of particulates and aerosols in the process facilities. The offgases from the LAW melters are characterized as high temperature streams. Therefore, the additional equipment (e.g., quenching and mist elimination equipment) will be required to protect the HEPA filters in the LAW Facility.
- **T-BACT for Acid Gases:** The selected T-BACT for acid gas control in the LAW Facility are carbon adsorbers for halide gases and caustic scrubbers for sulfur oxide control. Each will achieve a removal efficiency of 97%.
- **T-BACT for Volatile Organic Compounds:** Oxidizers with a removal efficiency of 99% or SCOs with a removal efficiency of 95% are T-BACT for the control of VOCs in the LAW Facility. [ALARA]

Verification: Verification is expected to be achieved through the following:

Verif. Method	Verif. By	Plan	Notes/Comments
R	**ENG**	Review the design and vendor data to verify conformance with the T-BACT requirements in the NOC.	May be documented in assessment/evaluation report.

3.4.2.4 Treatment of Nitrogen Oxide Emissions

Requirement: The LOP and LVP systems' equipment shall be designed, with consideration of the limiting melter feed rates from the Dangerous Waste Permit (DWP) tables, to ensure nitrogen oxide emissions do not exceed 477 ppm (dry) by volume at 21% oxygen averaged over 24 consecutive hours, or 200.1 lbs. per day averaged over 30 consecutive days, and have the capability to demonstrate compliance to this performance. [Approval Condition 4, PSD Air Permit][Appendix Ch04, Section 4.3.4, DWP][Section C.7(d)(3)(iv), WTP Contract] (A.7)

Basis Discussion: The LAW melters are thermal treatment units permitted as Miscellaneous Units under Washington Administrative Code 173-303-680. The arsenic, nitrogen oxide discharge emission limit is in the air Permit and is what is achievable with T-BACT equipment in the system. Melter limiting feed rates are in tables in the Dangerous Waste Permit, but the tables are indicated as RESERVED with no information in them. The demonstration testing and documentation (prepared by commissioning) will provide the basis and support the values for the Dangerous Waste Permit feed rates.

It is beneficial to refer to CCN No. 036692, *Emissions Report and Process Engineering Design Calculations*, for discussion of emission limits within the context of the DWP emission limits, the Air Permit emission limits, and the risk based assessment.

Verification: Verification is expected to be achieved through the following:

Verif. Method	Verif. By	Plan	Notes/Comments
A	**ENG**	Perform an analysis to verify the ability of the offgas system to ensure nitrogen oxide emissions are within limits.	May be documented in assessment/evaluation report.
T	**SU/ COM**	Test to verify the nitrogen oxide emissions are within limits.	In accordance with Ecology-approved test plan, 24590-LAW-PER-CTST-17-001.

3.4.2.5 Treatment Particulate Matter under 10 Microns (PM_{10}) Emissions

Requirement: The LOP and LVP systems' equipment shall be designed, with consideration of the limiting melter feed rates from the DWP tables, to ensure particulate matter < 10 micrometers (PM_{10}) emissions do not exceed 0.36 pounds per hour at 21% oxygen, when averaged over 24 consecutive hours, and have the capability to demonstrate compliance to this performance. [Approval Condition 5, PSD Air Permit] [Section C.7(d)(3)(iv), WTP Contract] (A.6)

Basis Discussion: PM_{10} is the measurement of particulates smaller than 10 microns. Initial testing is required to be performed within 60 days of achieving hot commissioning, but no later than 180 days from initial startup. Use of HEPA filtration in the design is expected to ensure exhaust conforms to emissions limits.

The LAW melters are thermal treatment units permitted as Miscellaneous Units under the Washington Administrative Code 173-303-680. The PM_{10} discharge emission limit is in the Air Permit and is what is achievable with T-BACT equipment in the system. Melter limiting feed rates are in tables in the Dangerous Waste Permit, but the tables are indicated as RESERVED with no information in them. The demonstration testing and documentation (prepared by commissioning) will provide the basis and support the values for the Dangerous Waste Permit feed rates.

It is beneficial to refer to CCN No. 036692, *Emissions Report and Process Engineering Design Calculations*, for discussion of emission limits within the context of the DWP emission limits, the Air Permit emission limits, and the risk based assessment.

Verification: Verification is expected to be achieved through the following:

Verif. Method	Verif. By	Plan	Notes/Comments
A	**ENG**	Perform an analysis to verify the ability to sample the offgas for PM_{10} emissions per 40 CFR 60, *Standards of Performance for New Stationary Sources*, Appendix A, Methods 1 – 5.	May be documented in assessment/evaluation report.
T	**SU/ COM**	Test per 40 CFR 60, Appendix A, Methods 1 thru 5, including verification that PM_{10} emissions are within limits.	In accordance with Ecology-approved test plan, 24590-LAW-PER-CTST-17-001.

3.4.2.6 Particulate Matter Emissions

Requirement: The LOP and LVP systems' equipment shall be designed, with consideration of the limiting melter feed rates from the DWP tables, to ensure particulate matter emissions do not exceed 34 mg per dry standard cubic meter (dscm) (0.015 grains per dry standard cubic foot), and have the capability to demonstrate compliance to this performance. [Section III.10.H.1.b.ii, Appendix Ch04, Section 4.3.4, DWP][Section C.7(d)(3)(iv), WTP Contract] (A.3, A.6)

Basis Discussion: The LAW melters are thermal treatment units permitted as Miscellaneous Units under Washington Administrative Code 173-303-680. Particulate matter discharge emission limit is in the Dangerous Waste Permit and is what is achievable with T-BACT equipment in the system. Melter limiting feed rates are in tables in the Dangerous Waste Permit, but the tables are indicated as RESERVED with no information in them. The demonstration testing and documentation (prepared by commissioning) will provide the basis and support the values for the Dangerous Water Permit feed rates.

It is beneficial to refer to CCN No. 036692, *Emissions Report and Process Engineering Design Calculations*, for discussion of emission limits within the context of the DWP emission limits, the Air Permit emission limits, and the risk based assessment.

Verification: Verification is expected to be achieved through the following:

Verif. Method	Verif. By	Plan	Notes/Comments
A	**ENG**	Perform an analysis to verify the ability of the offgas system to ensure particulate emissions are within limits.	May be documented in assessment/evaluation report.
T	**SU/ COM**	Test to verify particulate emissions are within limits.	In accordance with Ecology-approved test plan, 24590-LAW-PER-CTST-17-001.

3.4.2.7 Hydrochloric Acid and Chlorine Gas Emissions

Requirement: The LOP and LVP systems' equipment shall be designed, with consideration of the limiting melter feed rates from the DWP tables, to ensure hydrochloric acid and chlorine gas emissions do not exceed 21 ppm by volume, combined, and have the capability to demonstrate compliance to this performance. [Sections III.10.H.1.b.iii, III.10.I.1.b.iii, DWP][Section C.7(d)(3)(iv), WTP Contract] (A.7)

Basis Discussion: The LAW melters are thermal treatment units permitted as Miscellaneous Units under Washington Administrative Code 173-303-680. The hydrochloric acid and chlorine gas discharge emission limit is in the Dangerous Waste Permit and is what is achievable with T-BACT equipment in the system. Melter limiting feed rates are in tables in the Dangerous Waste Permit, but the tables are indicated as RESERVED with

no information in them. The demonstration testing and documentation (prepared by commissioning) will provide the basis and support the values for the Dangerous Waste Permit feed rates.

It is beneficial to refer to CCN No. 036692, *Emissions Report and Process Engineering Design Calculations*, for discussion of emission limits within the context of the DWP emission limits, the Air Permit emission limits, and the risk based assessment.

Verification: Verification is expected to be achieved through the following:

Verif. Method	Verif. By	Plan	Notes/Comments
A	**ENG**	Perform an analysis to verify the ability of the offgas system to ensure hydrochloric acid and chlorine gas emissions are within limits.	May be documented in assessment/evaluation report.
T	**SU/ COM**	Test to verify hydrochloric acid and chlorine gas emissions are within limits.	In accordance with Ecology-approved test plan, 24590-LAW-PER-CTST-17-001.

3.4.2.8 Dioxin and Furan Toxicity Equivalence Emissions

Requirement: The LOP and LVP systems' equipment shall be designed, with consideration of the limiting melter feed rates from the DWP tables, to ensure dioxin and furan toxicity equivalence (TEQ) emissions do not exceed 0.2 ng/dscm, individually, and have the capability to demonstrate compliance to this performance. [Sections III.10.H.1.b.iv, III.10.I.1.b.iv, DWP][Section C.7(d)(3)(iv), WTP Contract] (A.7)

Basis Discussion: The LAW melters are thermal treatment units permitted as Miscellaneous Units under Washington Administrative Code 173-303-680. The dioxin and furan TEQ discharge emission limit is in the Dangerous Waste Permit and is what is achievable with T-BACT equipment in the system. Melter limiting feed rates are in tables in the Dangerous Waste Permit, but the tables are indicated as RESERVED with no information in them. The demonstration testing and documentation (prepared by commissioning) will provide the basis and support the values for the Dangerous Waste Permit feed rates.

It is beneficial to refer to CCN No. 036692, *Emissions Report and Process Engineering Design Calculations*, for discussion of emission limits within the context of the DWP emission limits, the Air Permit emission limits, and the risk based assessment.

Verification: Verification is expected to be achieved through the following:

Verif. Method	Verif. By	Plan	Notes/Comments
A	**ENG**	Perform an analysis to verify the ability of the offgas system to ensure dioxin and furan TEQ emissions are within limits.	May be documented in assessment/evaluation report.
T	**SU/ COM**	Test to verify dioxin and furan TEQ emissions are within limits.	In accordance with Ecology-approved test plan, 24590-LAW-PER-CTST-17-001.

3.4.2.9 Mercury Emissions

Requirement: The LOP and LVP systems' equipment shall be designed, with consideration of the limiting melter feed rates from the DWP tables, to ensure mercury emissions do not exceed 45 μg/dscm, and have the capability to demonstrate compliance to this performance. [Sections III.10.H.1.b.v, III.10.I.1.b.v, DWP][Section C.7(d)(3)(iv), WTP Contract] (A.7)

Basis Discussion: The LAW melters are thermal treatment units permitted as Miscellaneous Units under Washington Administrative Code 173-303-680. The mercury discharge emission limit is in the Dangerous Waste Permit and is what is achievable with T-BACT equipment in the system. Melter limiting feed rates are in tables in the Dangerous Waste Permit, but the tables are indicated as RESERVED with no information in them. The demonstration testing and documentation (prepared by commissioning) will provide the basis and support the values for the Dangerous Waste Permit feed rates.

It is beneficial to refer to CCN No. 036692, *Emissions Report and Process Engineering Design Calculations*, for discussion of emission limits within the context of the DWP emission limits, the Air Permit emission limits, and the risk based assessment.

Verification: Verification is expected to be achieved through the following:

Verif. Method	Verif. By	Plan	Notes/Comments
A	**ENG**	Perform an analysis to verify the ability of the offgas system to ensure mercury emissions are within limits.	May be documented in assessment/evaluation report.
T	**SU/ COM**	Test to verify mercury emissions are within limits.	In accordance with Ecology-approved test plan, 24590-LAW-PER-CTST-17-001.

3.4.2.10 Lead and Cadmium Emissions

Requirement: The LOP and LVP systems' equipment shall be designed, with consideration of the limiting melter feed rates from the DWP tables, to ensure lead and cadmium emissions do not exceed 120 μg/dscm, combined, and have the capability to demonstrate compliance to this performance. [Sections III.10.H.1.b.vi, III.10.I.1.b.vi, DWP][Section C.7(d)(3)(iv), WTP Contract] (A.7)

Basis Discussion: The LAW melters are thermal treatment units permitted as Miscellaneous Units under Washington Administrative Code 173-303-680. The lead and cadmium discharge emission limit is in the Dangerous Waste Permit and is what is achievable with T-BACT equipment in the system. Melter limiting feed rates are in tables in the Dangerous Waste Permit, but the tables are indicated as RESERVED with no information in them. The demonstration testing and documentation (prepared by commissioning) will provide the basis and support the values for the Dangerous Waste Permit feed rates.

It is beneficial to refer to CCN No. 036692, *Emissions Report and Process Engineering Design Calculations*, for discussion of emission limits within the context of the DWP emission limits, the Air Permit emission limits, and the risk based assessment.

Verification: Verification is expected to be achieved through the following:

Verif. Method	Verif. By	Plan	Notes/Comments
A	**ENG**	Perform an analysis to verify the ability of the offgas system to ensure lead and cadmium emissions are within limits.	May be documented in assessment/evaluation report.
T	**SU/ COM**	Test to verify lead and cadmium emissions are within limits.	In accordance with Ecology-approved test plan, 24590-LAW-PER-CTST-17-0.

3.4.2.11 Arsenic, Beryllium, and Chromium Emissions

Requirement: The LOP and LVP systems' equipment shall be designed, with consideration of the limiting melter feed rates from the DWP tables, to ensure arsenic, beryllium, and chromium emissions do not exceed 97 µg/dscm, combined, and have the capability to demonstrate compliance to this performance. [Sections III.10.H.1.b.vii, III.10.I.1.b.vii, DWP][Section C.7(d)(3)(iv), WTP Contract] (A.7)

Basis Discussion: The LAW melters are thermal treatment units permitted as Miscellaneous Units under Washington Administrative Code 173-303-680. The arsenic, beryllium, and chromium discharge emission limit is in the Dangerous Waste Permit and is what is achievable with T-BACT equipment in the system. Melter limiting feed rates are in tables in the Dangerous Waste Permit, but the tables are indicated as RESERVED with no information in them. The demonstration testing and documentation (prepared by commissioning) will provide the basis and support the values for the Dangerous Waste Permit feed rates.

It is beneficial to refer to CCN No. 036692, *Emissions Report and Process Engineering Design Calculations*, for discussion of emission limits within the context of the DWP emission limits, the Air Permit emission limits, and the risk based assessment.

Verification: Verification is expected to be achieved through the following:

Verif. Method	Verif. By	Plan	Notes/Comments
A	**ENG**	Perform an analysis to verify the ability of the offgas system to ensure arsenic, beryllium, and chromium emissions are within limits.	May be documented in assessment/evaluation report.
T	**SU/ COM**	Test to verify arsenic, beryllium, and chromium emissions are within limits.	In accordance with Ecology-approved test plan, 24590-LAW-PER-CTST-17-001.

3.4.2.12 Carbon Monoxide Emission

Requirement: The LOP and LVP systems' equipment shall be designed, with consideration of the limiting melter feed rates from the DWP tables, to ensure carbon monoxide emissions do not exceed 100 ppm by volume over an hourly rolling average, dry basis, and have the capability to demonstrate compliance to this performance. [Sections III.10.H.1.b.viii, III.10.I.1.b.viii, DWP][Section C.7(d)(3)(iv), WTP Contract] (A.7)

Basis Discussion: The LAW melters are thermal treatment units permitted as Miscellaneous Units under Washington Administrative Code 173-303-680. The carbon monoxide discharge emission limit is in the Dangerous Waste Permit and is what is achievable with T-BACT equipment in the system. Melter limiting feed rates are in tables in the Dangerous Waste Permit, but the tables are indicated as RESERVED with no information in them. The demonstration testing and documentation (prepared by commissioning) will provide the basis and support the values for the Dangerous Waste Permit feed rates.

It is beneficial to refer to CCN No. 036692, *Emissions Report and Process Engineering Design Calculations*, for discussion of emission limits within the context of the DWP emission limits, the Air Permit emission limits, and the risk based assessment.

Verification: Verification is expected to be achieved through the following:

Verif. Method	Verif. By	Plan	Notes/Comments
A	**ENG**	Perform an analysis to verify the ability of the offgas system to ensure carbon monoxide emissions are within limits.	May be documented in assessment/evaluation report.
T	**SU/ COM**	Test to verify carbon monoxide emissions are within limits.	In accordance with Ecology-approved test plan, 24590-LAW-PER-CTST-17-001.

3.4.2.13 Hydrocarbon Emission

Requirement: The LOP and LVP systems' equipment shall be designed, with consideration of the limiting melter feed rates from the DWP tables, to ensure hydrocarbon emission do not exceed 10 ppm by volume, over an hourly rolling average, dry basis, and reported as propane, and have the capability to demonstrate compliance to this performance during demonstration testing required by the Dangerous Waste Permit. [Sections III.10.H.1.b.ix, III10.I.1.b.ix, DWP][Section C.7(d)(3)(iv), WTP Contract] (A.7)

Basis Discussion: The LAW melters are thermal treatment units permitted as Miscellaneous Units under Washington Administrative Code 173-303-680. The hydrocarbon discharge emission limit is in the Dangerous Waste Permit and is what is achievable with T-BACT equipment in the system. Melter limiting feed rates are in tables in the Dangerous Waste Permit, but the tables are indicated as RESERVED with no information in them. The demonstration testing and documentation (prepared by commissioning) will provide the basis and support the values for the Dangerous Waste Permit feed rates.

It is beneficial to refer to CCN No. 036692, *Emissions Report and Process Engineering Design Calculations*, for discussion of emission limits within the context of the DWP emission limits, the Air Permit emission limits, and the risk based assessment.

Verification: Verification is expected to be achieved through the following:

Verif. Method	Verif. By	Plan	Notes/Comments
A	**ENG**	Perform an analysis to verify the ability of the offgas system to ensure hydrocarbon emissions are within limits.	May be documented in assessment/evaluation report.
T	**SU/ COM**	Test to verify hydrocarbon emissions are within limits.	In accordance with Ecology-approved test plan, 24590-LAW-PER-CTST-17-001.

3.4.2.14 Organic Compound Destruction

Requirement: The LOP and LVP systems' equipment shall be designed, with consideration of the limiting melter feed rates from the DWP tables, to ensure a minimum destruction and removal efficiency (DRE) of 99.99% for the PODCs. [Sections III.10.H.1.b.i, III.10.I.1.b.i, DWP][Section C.7(d)(3)(iv), WTP Contract] (A.7)

Basis Discussion: The LAW melters are thermal treatment units permitted as Miscellaneous Units under Washington Administrative Code 173-303-680. The PODCs limit is in the Dangerous Waste Permit and is what

is achievable with T-BACT equipment in the system. Melter limiting feed rates are in tables in the Dangerous Waste Permit, but the tables are indicated as RESERVED with no information in them. The demonstration testing and documentation (prepared by commissioning) will provide the basis and support the values for the Dangerous Waste Permit feed rates.

It is beneficial to refer to CCN No. 036692, *Emissions Report and Process Engineering Design Calculations*, for discussion of emission limits within the context of the DWP emission limits, the Air Permit emission limits, and the risk based assessment.

Verification: Verification is expected to be achieved through the following:

Verif. Method	Verif. By	Plan	Notes/Comments
A	**ENG**	Perform an analysis to verify the ability of the offgas system to ensure PODCs emissions are within limits.	May be documented in assessment/evaluation report.
T	**SU/ COM**	Test to verify PODCs can meet 99.99% Destruction and Removal Efficiency.	In accordance with Ecology-approved test plan, 24590-LAW-PER-CTST-17-001.

3.4.2.15 Deleted

3.4.2.16 Hazardous Confinement (Ammonia and Nitrogen Oxides)

Requirement: The following hierarchy of gaseous hazards controls shall be applied to the design of the LOP/LVP systems and their components relative to the control of nitrogen oxides and ammonia vapor to separate the hazard from facility personnel:

- Systems with gaseous hazards shall be located outdoors (to the extent practicable).
- Potential leak points in areas that could result in worker exposure to gases above the short-term exposure limit (per American Conference of Industrial Hygienists) shall be contained within ventilated enclosures.
- Piping and tubing systems containing gaseous hazards within facility buildings shall use welded joints to eliminate leak points (except where other joints/couplings are needed to support maintenance requirements).
- If potential leak points are not enclosed, evaluation of design leakage from system components and piping against designed ventilation flow through the affected room must demonstrate atmospheric concentrations remain below the short-term exposure limit during normal system operation if the affected space is accessible to personnel without controls to ensure safe entry.

[Section 8.1.4.2, ORD] (A.1)

Basis Discussion: Analysis/evaluation is used to determine the design controls and the extent or scope of the selected control applied to the system.

The outboard flange on valve AMR-V-40886, that defines the LAW Facility boundary with respect to the ammonia transfer line, is located external to the LAW facility. All ammonia components and piping internal to the LAW Facility are part of the LOP/LVP systems.

Verification: Verification is expected to be achieved through the following:

Verif. Method	Verif. By	Plan	Notes/Comments
A	**NSE**	Perform an analysis/evaluation of the potential gaseous hazards of NO_x and ammonia vapor within the LOP/LVP system boundary to determine the controls to apply to the design.	Include Operations and Industrial Safety/Hygiene participation in the analysis/evaluation.
R	**ENG**	Review design to verify conformance with controls or design features selected in the analysis/evaluation.	

3.4.2.17 Deleted

3.4.2.18 Deleted

3.4.2.19 Safety Classifications

Requirement: The LOP and LVP systems' SSCs shall be classified as safety significant SSCs in accordance with Table 3-2. [Sections 4.4.3.1.1, 4.4.3.6.1, 4.4.3.8.1, 4.4.3.9.1, 4.4.3.11.1, 4.4.3.12.1, 4.4.3.13.1, 4.4.3.15.1, 4.4.3.16.1, 4.4.3.17.1, 4.4.3.18.1, 4.4.3.19.1, 4.4.4.1.1.1, 4.4.4.1.4.1, 4.4.4.1.5.1, 4.4.4.1.6.1, 4.4.4.1.7.1, 4.4.4.1.8.1, 4.4.4.1.9.1, 4.4.4.1.10.1, 4.4.4.1.11.1, 4.4.4.1.12.1, 4.4.4.1.13.1, 4.4.4.1.15.1, 4.4.4.1.16.1, 4.4.4.1.17.1, 4.4.4.1.18.1, 4.4.4.1.19.1, 4.4.4.1.20.1, 4.4.4.1.21.1, 4.4.4.1.22.1, Appendix A Table A-1, LAW-DSA]

Table 3-2 LOP and LVP Safety Functions

Equipment/ Component Description	Credited Safety Function	Classifi-cation	Reference
Offgas Confinement to Elevated Release	Primary Pathway – The offgas confinement boundary mitigates the consequences of a release of radioactive and chemically hazardous material by providing an elevated release.	**SS**	Section 4.4.3.1.1, Appendix A Table A-1, LAW-DSA
	Secondary Pathway – The offgas confinement boundary mitigates the consequences of an offgas release to the melter gallery by providing a secondary release pathway to the process cell of the affected melter.	**SS**	
	The offgas confinement boundary liquid-bearing vessels (LOP-SCB-00001/-00002, LOP-VSL-00001/-00002, LVP-SCB-00001) mitigate the consequences of a seismic event by providing passive confinement of liquids.	**SS**	
Melter Special Relief Device	The melter special relief device mitigates the release of offgas due to melter pressurization by relieving excess system pressure.	**SS**	Section 4.4.3.6.1, Appendix A Table A-1, LAW-DSA

Table 3-2 LOP and LVP Safety Functions

Equipment/ Component Description	Credited Safety Function	Classifi-cation	Reference
Carbon Bed Adsorber Water Addition Flow Restriction Device	The carbon bed water addition flow restriction device reduces the probability of a release of chemically hazardous material to all receptors by preventing a blockage of the mercury mitigation skid bypass line (LVP-PW-00015-S11N) due to carbon bed water addition.	**SS**	Section 4.4.3.12.1, Appendix A Table A-1, LAW-DSA
AMR/LVP Piping	Reduces the probability of a release of anhydrous ammonia by maintaining confinement Note: The boundary limits for this control begin at the upstream flange of the isolation valve (AMR-V-40886) on the ammonia pipeline exiting the ground at the southwest corner of the LAW Main Process building (24590-BOF-M6-AMR-00003001)	**SS**	Section 4.4.3.13.1, Appendix A Table A-1, LAW-DSA
Offgas Exhausters	The offgas exhausters mitigate the consequences of a release of radioactive and chemically hazardous material by providing the motive force for an elevated release.	**SS**	Section 4.4.3.17.1, Appendix A Table A-1, LAW-DSA
Submerged Bed Scrubber (SBS) Vessel	The Submerged Bed Scrubber (SBS) Vessel reduces the probability of a release of radioactive and chemically hazardous material by protecting the offgas system from overheating	**SS**	Section 4.4.3.8.1, Appendix A Table A-1, LAW-DSA
SBS PSVs and Chilled Water Cooling Coils	SBS cooling coil and cooling jacket PSVs, and chilled water cooling coils reduce the probability of a release of radioactive and chemically hazardous material by protecting against an SBS cooling water leak impacting SBS vessel level	**SS**	Section 4.4.3.9.1, Appendix A Table A-1, LAW-DSA
Valves (LOP-FV-1140 and LOP-FV-2140) Design (WESP modulating valves)	Reduces the probability of a release of radioactive and chemically hazardous material by providing a physical stop to ensure the valve cannot fail fully closed.	**SS**	Section 4.4.3.11.1, Appendix A Table A-1, LAW-DSA
Stack Drain Line Restriction Orifice (LVP-RO-00002)	Mitigates the consequences of a release of radioactive and chemically hazardous material by limiting offgas return flow from the stack condensate drain.	**SS**	Section 4.4.3.18.1, Appendix A Table A-1, LAW-DSA
Vessel Vent Restriction Orifice (LVP-RO-00001)	Mitigates the consequences of a release of radioactive and chemically hazardous material by limiting air ingress to the offgas system through the vessel vent header.	**SS**	Section 4.4.3.19.1, Appendix A Table A-1, LAW-DSA
Melter Plenum High Pressure Interlock (LMP)	The interlock limits the release of radioactive and chemically hazardous material by reducing melter offgas load to restore plenum vacuum in the event vacuum is degraded.	**SS**	Section 4.4.4.1.1.1, Appendix A Table A-1, LAW-DSA

Table 3-2 LOP and LVP Safety Functions

Equipment/ Component Description	Credited Safety Function	Classifi-cation	Reference
	The interlock mitigates the consequences of facility worker exposure to radioactive and chemically hazardous material by initiating evacuation of the affected area.	**SS**	
	Limits the release of radioactive and chemically hazardous material by reducing the material at risk in the affected melter in the event that control signal or air to a Safety Instrumented System (SIS) component is lost.	**SS**	
	Reduces the probability of a release of radioactive and chemically hazardous material by preventing the final control elements of the SIS from failing in a manner that would cause a release.	**SS**	
Primary/Standby Film Cooler Low Flow Interlock (Melter 1 and Melter 2)	The interlock reduces the probability of a release of radioactive and chemically hazardous material by preventing a failure of the offgas system confinement boundary caused by high offgas temperatures.	**SS**	Section 4.4.4.1.4.1, Appendix A Table A-1, LAW-DSA
	Reduces the probability of a release of radioactive and chemically hazardous material by preventing the final control elements of the SIS from failing in a manner that would cause a release	**SS**	
SBS Low Level Interlocks (Melter 1 and Melter 2)	The interlock reduces the probability of a release of radioactive and chemically hazardous material by preventing a failure of the offgas system confinement boundary caused by high offgas temperatures.	**SS**	Section 4.4.4.1.5.1, Appendix A Table A-1, LAW-DSA
	The interlock mitigates the consequences of a release of radioactive and chemically hazardous material by providing a hydraulic seal to isolate offgas flow from the melter to beyond the SBS upon loss of system vacuum.	**SS**	
	Reduces the probability of a release of radioactive and chemically hazardous material by preventing the final control elements of the SIS from failing in a manner that would cause a release.	**SS**	
SBS High Level Interlocks (Melter 1 and Melter 2)	The interlock reduces the probability of a release of radioactive and chemically hazardous material by limiting the introduction of water into the SBS.	**SS**	Section 4.4.4.1.6.1, Appendix A Table A-1, LAW-DSA
	Reduces the probability of a release of radioactive and chemically hazardous material by preventing the final control elements of the SIS from failing in a manner that would cause a release.	**SS**	
WESP High Level Interlocks	The interlock reduces the probability of a release of radioactive and chemically hazardous material by preventing an obstruction in the offgas system caused by high WESP level.	**SS**	Section 4.4.4.1.7.1, Appendix A Table A-1, LAW-DSA

Table 3-2 LOP and LVP Safety Functions

Equipment/ Component Description	Credited Safety Function	Classifi-cation	Reference
(Melter 1 and Melter 2)	Reduces the probability of a release of radioactive and chemically hazardous material by preventing the final control elements of the SIS from failing in a manner that would cause a release	**SS**	
Offgas HEPA Preheater High Temperature Interlock	The interlock reduces the probability of a release of radioactive and chemically hazardous material, by preventing a failure of the offgas confinement boundary caused by high offgas temperatures.	**SS**	Section 4.4.4.1.8.1, Appendix A Table A-1, LAW-DSA
	The interlock reduces the probability of a release of radioactive and chemically hazardous material, by preventing a failure of the offgas confinement boundary caused by carbon bed media ignition	**SS**	
	Reduces the probability of a release of radioactive and chemically hazardous material by preventing the final control elements of the SIS from failing in a manner that would cause a release	**SS**	
Offgas Header High Pressure Interlock	The interlock limits the release of radioactive and chemically hazardous material by reducing sources of offgas and reconfiguring the offgas system to maintain melter plenum vacuum in the event of high or low pressure in the LVP header.	**SS**	Section 4.4.4.1.9.1, Appendix A Table A-1, LAW-DSA
	Reduces the probability of a release of radioactive and chemically hazardous material by preventing the final control elements of the SIS from failing in a manner that would cause a release	**SS**	
Offgas Header Low Pressure Interlock	The interlock limits the release of radioactive and chemically hazardous material by reducing sources of offgas and reconfiguring the offgas system to maintain melter plenum vacuum in the event of low pressure in the LVP header	**SS**	Section 4.4.4.1.10.1, Appendix A Table A-1, LAW-DSA
	The interlock reduces the probability of a release of radioactive and chemically hazardous material by reconfiguring the offgas system to maintain melter structural integrity in the event of low pressure in the LVP header.	**SS**	
	Reduces the probability of a release of radioactive and chemically hazardous material by preventing the final control elements of the SIS from failing in a manner that would cause a release.	**SS**	
Carbon Bed High Differential CO	The interlock mitigates the consequences of a release of hazardous material by limiting the rate of combustion of a carbon bed fire and providing an alternate offgas flowpath.	**SS**	Section 4.4.4.1.11.1, Appendix A Table A-1, LAW-DSA

Table 3-2 LOP and LVP Safety Functions

Equipment/ Component Description	Credited Safety Function	Classifi-cation	Reference
Concentration Interlock	The interlock mitigates the co-located worker (CLW) consequences of a release of radioactive and chemically hazardous material by limiting the rate of combustion of a carbon bed fire.	**SS**	
	The interlock mitigates the consequences of a release of hazardous material due to melter overpressurization by providing an alternate offgas flowpath.	**SS**	
	Reduces the probability of a release of radioactive and chemically hazardous material by preventing the final control elements of the SIS from failing in a manner that would cause a release.	**SS**	
TCO Heater High Temperature Interlock	The interlock reduces the probability of a release of radioactive and chemically hazardous material by preventing a failure of the offgas confinement boundary caused by high offgas temperatures.	**SS**	Section 4.4.4.1.12.1, Appendix A Table A-1, LAW-DSA
	Reduces the probability of a release of radioactive and chemically hazardous material by preventing the final control elements of the SIS from failing in a manner that would cause a release	**SS**	
TCO Skid High Temperature Interlock	The interlock reduces the probability of a release of radioactive and chemically hazardous material by preventing a failure of the offgas confinement boundary caused by high offgas temperatures.	**SS**	Section 4.4.4.1.13.1, Appendix A Table A-1, LAW-DSA
	Reduces the probability of a release of radioactive and chemically hazardous material by preventing the final control elements of the SIS from failing in a manner that would cause a release.	**SS**	
Ammonia High Flow Interlock	The interlock limits the release of chemically hazardous material by isolating ammonia supply to the SCR upon detection of a high flow condition.	**SS**	Section 4.4.4.1.15.1, Appendix A Table A-1, LAW-DSA
	Reduces the probability of a release of radioactive and chemically hazardous material by preventing the final control elements of the SIS from failing in a manner that would cause a release.	**SS**	
Ammonia Dilution Air Low Flow Interlock	Mitigates the release of ammonia by isolating ammonia supply if loss of dilution air flow is detected.	**SS**	Section 4.4.4.1.16.1, Appendix A Table A-1, LAW-DSA
	The interlock limits the release of chemically hazardous material by isolating ammonia supply if loss of dilution air flow is detected.	**SS**	
	Reduces the probability of a release of radioactive and chemically hazardous material by preventing the final control elements of the SIS from failing in a manner that would cause a release.	**SS**	

Table 3-2 LOP and LVP Safety Functions

Equipment/ Component Description	Credited Safety Function	Classifi-cation	Reference
Caustic Scrubber Recirculation Low Pressure Interlock	The interlock reduces the probability of a release of radioactive and chemically hazardous material by preventing a loss of LVP header vaccum from excessive air in-leakage into the offgas system from a failed recirculation line.	**SS**	Section 4.4.4.1.17.1, Appendix A Table A-1, LAW-DSA
	Reduces the probability of a release of radioactive and chemically hazardous material by preventing the final control elements of the SIS from failing in a manner that would cause a release.	**SS**	
Caustic Scrubber Recirculation Low Flow Interlock	The interlock reduces the probability of a release of radioactive and chemically hazardous material by preventing a failure of the exhausters from caustic scrubber outlet high temperatures.	**SS**	Section 4.4.4.1.18.1, Appendix A Table A-1, LAW-DSA
	Reduces the probability of a release of radioactive and chemically hazardous material by preventing the final control elements of the SIS from failing in a manner that would cause a release.	**SS**	
Caustic Scrubber Process Water Supply Low Pressure Interlock	The interlock reduces the probability of a release of radioactive and chemically hazardous material by preventing a loss of LVP header vacuum due to excessive air in-leakage from a failed process water line in the caustic scrubber system.	**SS**	Section 4.4.4.1.19.1, Appendix A Table A-1, LAW-DSA
	Reduces the probability of a release of radioactive and chemically hazardous material by preventing the final control elements of the SIS from failing in a manner that would cause a release.	**SS**	
Offgas Exhauster 1A/1B/1C Shaft Seal Air Supply Low Pressure Interlock	The interlock limits the release of radioactive and chemically hazardous material through the exhauster shaft seals by supplying back-up air pressure to the exhauster shaft seals.	**SS**	Section 4.4.4.1.21.1, Appendix A Table A-1, LAW-DSA
	Reduces the probability of a release of radioactive and chemically hazardous material by preventing the final control elements of the SIS from failing in a manner that would cause a release.	**SS**	
Offgas Exhauster 1A/1B/1C Shaft Seal Low Pressure Interlock	The interlock limits the release of radioactive and chemically hazardous material through the exhauster shaft seals by supplying back-up air pressure to the exhauster shaft seals.	**SS**	Section 4.4.4.1.20.1, Appendix A Table A-1, LAW-DSA

Table 3-2 LOP and LVP Safety Functions

Equipment/ Component Description	Credited Safety Function	Classifi-cation	Reference
	Reduces the probability of a release of radioactive and chemically hazardous material by preventing the final control elements of the SIS from failing in a manner that would cause a release.	**SS**	
Loss of Normal Power to Safety Equipment Interlock	The interlock limits the release of radioactive and chemically hazardous material by reconfiguring the offgas system to maintain melter plenum vacuum in the event of loss of normal power to the safety equipment, primarily exhausters.	**SS**	Section 4.4.4.1.22.1, Appendix A Table A-1, LAW-DSA
	Reduces the probability of a release of radioactive and chemically hazardous material by preventing the final control elements of the SIS from failing in a manner that would cause a release.	**SS**	
Vacuum Breaker	Mitigates the consequences of a release of radioactive and chemically hazardous material by ensuring sufficient makeup air to support exhauster operation during high/low header vacuum, and loss of power conditions.	**SS**	Section 4.4.3.16.1, Appendix A Table A-1, LAW-DSA
Pneumatic Permissive	Reduces the probability of a release of radioactive and chemically hazardous material by preventing a failure of the offgas confinement boundary or exhausters from offgas high temperatures.	**SS**	Section 4.4.3.15.1, Appendix A Table A-1, LAW-DSA
	Reduces the probability of a release of radioactive and chemically hazardous material by ensuring an unobstructed offgas flow path.	**SS**	

Basis Discussion: All SSCs for the LOP and LVP offgas system, are credited SS for confinement, and as noted in Table 3-2. For more information on instruments, controls, and safety interlocks see section 3.9.2. [ALARA]

Verification: Verification is expected to be achieved through the following:

Verif. Method	Verif. By	Plan	Notes/Comments
R	**ENG**	Review design to verify the correct safety classifications and safety functions.	

3.4.2.20 Seismic Design

Requirement: The LOP and LVP systems shall meet SC-III requirements. Based on natural phenomena and confinement considerations, the offgas system components listed in Table 3-3, shall be designed to meet SC-III requirements and perform their safety function under design basis seismic loads. [Safety Criterion 4.1-3, SRD][Sections 4.4.3.1.3, 4.4.3.1.4, 4.4.3.8.3, 4.4.3.8.4, 4.4.3.9.3, 4.4.3.9.4, 4.4.3.11.3, 4.4.3.11.4, 4.4.3.13.3,

4.4.3.13.4, 4.4.3.16.3, 4.4.3.16.4, 4.4.3.17.3, 4.4.3.17.4, 4.4.3.18.3, 4.4.3.18.4, 4.4.3.19.3, 4.4.3.19.4, Appendix A Table A-1, LAW-DSA]

Table 3-3 LOP and LVP Seismic Equipment

Description	Seismic Category	Reference
Offgas Confinement to Elevated Release • offgas confinement boundary • offgas liquid confinement boundary (LOP-SCB-00001/-00002, LOP-VSL-00001/-00002, LVP-SCB-00001)	SC-III	Section 4.4.3.1.3, 4.4.3.1.4 Appendix A Table A-1, LAW-DSA
Offgas Exhausters	SC-III	Section 4.4.3.17.3, 4.4.3.17.4 Appendix A Table A-1, LAW-DSA
Submerged Bed Scrubber (SBS) Vessel	SC-III	Section 4.4.3.8.3, 4.4.3.8.4 Appendix A Table A-1, LAW-DSA
SBS PSVs and Chilled Water Cooling Coils • SBS chilled water cooling coil pressure relief valves, external cooling jacket pressure relief valves, and piping internal to the vessel	SC-III	Section 4.4.3.9.3, 4.4.3.9.4 Appendix A Table A-1, LAW-DSA
Valves (LOP-FV-1140 and LOP-FV-2140) Design (WESP modulating valves)	SC-III	Section 4.4.3.11.3, 4.4.3.11.4 Appendix A Table A-1, LAW-DSA
Stack Drain Line Restriction Orifice (LVP-RO-00002)	SC-III	Section 4.4.3.18.3, 4.4.3.18.4 Appendix A Table A-1, LAW-DSA
Vessel Vent Restriction Orifice (LVP-RO-00001)	SC-III	Section 4.4.3.19.3, 4.4.3.19.4 Appendix A Table A-1, LAW-DSA
Vacuum Breaker	SC-III	Sections 4.4.3.16.3, 4.4.3.16.4, Appendix A Table A-1, LAW-DSA
LAW Facility AMR/LVP piping	SC-III	Section 4.4.3.13.3, 4.4.13.4, Appendix A Table A-1, LAW-DSA

Basis Discussion: The *Safety Requirements Document* (SRD), safety criterion 4.1-3 details the equivalence of the WTP seismic category to the seismic performance category of DOE-STD-1020-94, *Natural Phenomena Hazards Design and Evaluation Criteria for Department of Energy Facilities*. The SRD also states that SSCs designated as safety SSCs be designed to withstand the effects of NPH events (e.g., earthquakes, wind, and floods) without loss of capability to perform specified safety functions. [ALARA]

Verification: Verification is expected to be achieved through the following:

Verif. Method	Verif. By	Plan	Notes/Comments
A	**ENG**	Perform an analysis to verify the ability of the systems piping and equipment to withstand a seismic category SC-III event to maintain confinement.	
R	**ENG**	Review design to verify alignment with analysis.	May be documented in assessment/evaluation report.

3.4.2.21 Deleted

3.4.2.22 Deleted

3.4.2.23 Deleted

3.4.2.24 Melter Offgas Confinement Boundary (Mercury Mitigation Skid Fire)

Requirement: The mercury mitigation skid units and associated piping with the inlet valves closed shall maintain the offgas confinement boundary during the evaluated fire scenario. The carbon bed adsorbers pressure boundary shall remain intact up to a localized temperature of 634°F. [Sections 4.4.3.1.3, 4.4.3.1.4, Appendix A Table A-1, LAW-DSA] (A.1)**Basis Discussion:** The confinement boundary mitigates the release of chemically hazardous material by providing a primary exhaust pathway of melter offgas during a mercury mitigation skid fire and maintaining a confinement boundary.

Verification: Verification is expected to be achieved through the following:

Verif. Method	Verif. By	Plan	Notes/Comments
A	**ENG**	Perform an analysis to verify the ability of the system's melter offgas confinement boundary to provide confinement during a mercury mitigation skid fire and remain intact up to a localized temperature of 634°F.	
R	**ENG**	Review design to verify alignment with analysis.	May be documented in assessment/evaluation report.

3.4.2.25 Deleted

3.4.2.26 LVP Vacuum Breaker

Requirement: The vacuum breaker shall allow sufficient air inflow to protect the melter from excessive vacuum and maintain continued exhauster operation during reconfiguration of the melter offgas system, without causing a loss of melter vacuum due to too much vacuum breaker air in-leakage. The vacuum breaker shall maintain system pressure between -60 in. W.G. and -67 in. W.G. at the exhauster suction, and shall be sized for a flow capacity of at least 4275 scfm. [Sections 4.4.3.16.3, 4.4.3.16.4, Appendix A Table A-1, LAW-DSA](A.1)

Basis Discussion: Reduces the probability of a release of radioactive and chemically hazardous material by ensuring sufficient makeup air to support exhauster operation during high/low header vacuum, and loss of power conditions.

Verification: Verification is expected to be achieved through the following:

Verif. Method	Verif. By	Plan	Notes/Comments
A	**ENG**	Perform an analysis to determine the sizing of the vacuum breaker to maintain exhauster suction pressure between -60 in. W.G. and -67 in. W.G. with a flow capacity of at least 4275 scfm.	
R	**ENG**	Review design to verify alignment with analysis.	May be documented in assessment/evaluation report.

Verif. Method	Verif. By	Plan	Notes/Comments
T	SU/ COM	Test to verify the vacuum breaker maintains offgas header pressure between -60 in WG and -67 in WG, measured at a location between the caustic scrubber and the exhauster suction, with the offgas system in the reconfiguration line-up. The test shall confirm acceptable pressure for one, two and three online fan configurations (at reconfiguration speed).	

3.4.2.27 Deleted – Relocated to 3.7.2.6

3.4.2.28 DWP Tank/Vessels Systems and Ancillary Equipment Systems

The DWP tanks system and ancillary equipment design requirements for the LOP/LVP systems are divided between this system design description (SDD) (the LAW LOP SDD) and the LAW FDD. The DWP tank/vessels, ancillary equipment and piping systems covered by these requirements are for the LOP-VSL-00001, LOP-VSL-00002, and LVP-TK-00001. The facility and secondary containment DWP requirements are in the LAW FDD.

3.4.2.28.1 Dangerous Waste Tank System Design Requirements

Requirement: The LAW facility vessels (LOP-VSL-00001, and -00002, and LVP-TK-00001) tank systems that handle dangerous waste shall be designed in accordance with the requirements for tank system design and integrity assessments as identified in the DWP.

- Design the tank foundations to maintain the load imparted by the filled tank. (WAC 173-303-640[3][a][v][A]).
- Design ancillary equipment in such a way that it is supported and protected against physical damage and excessive stress due to settlement, vibration, expansion, or contraction. (WAC 173-303-640[3][f]).
- Design the tank system to prevent escape of vapors, fumes, or other emissions into the air if the tank holds materials acutely or chronically toxic by inhalation (WAC 173-303-640[5][e]).

Note: Additional tank system design requirements are found in 24590-LAW-3ZD-20-00002, *LAW Facility Design Description*.

[Section 14.10.1, BOD][Sections III.10.H.1.a.vii, III.10.H.1.a.xxix, III.10.E.3.d, DWP][Section C.7(d)(3)(iv), WTP Contract]

Basis Discussion: A tank system, as defined in WAC 173-303-040, is a dangerous waste storage or treatment tank and its associated ancillary equipment and secondary containment system. The listed LAW LOP/LVP vessels contain and confine dangerous waste.

Verification: Verification is expected to be achieved through the following:

Verif. Method	Verif. By	Plan	Notes/Comments
R	ENG	Review design to verify ancillary equipment is supported and protected against physical damage and excessive stress.	

Verif. Method	Verif. By	Plan	Notes/Comments
R	ENG	Review design to verify tank system prevents escape of vapors, fumes, or other emissions into the air.	

3.4.2.28.2 Spill Prevention Controls Design

Requirement: The following requirements shall be implemented as part of the spill and overflow prevention from the LOP/LVP tanks control design:

- Provide spill prevention controls (e.g., check valves, dry-disconnect couplings) (WAC 173-303-640[5][b][i]).
- Provide overfill prevention controls (e.g., level sensing devices, high-level alarms, automatic feed cutoff, pressure-sensing devices, or bypass to a standby tank) (WAC 173-303-640[5][b][ii]).
- Mark the tank systems with signs or labels visible at a distance for 50 ft. where routine personnel access is required (WAC 173-303-640[5][d]).
- Provide signs or labels with a legend identifying the material within the tank system to warn employees, emergency response personnel, and the public of major risks associated with the material (WAC 173-303-640[5][d]).

[Section 14.10.1.1, BOD][Sections III.10.E.5.d, III.10.E.5.e, DWP][Section C.7(d)(3)(iv), WTP Contract]

Basis Discussion: Spill prevention controls design is necessary to ensure that tanks/vessels containing dangerous liquid waste are clearly marked and contents of the tank are identified for the safety of facility workers. Provisions for spill prevention are made within the design to prevent the release of dangerous liquid waste during waste transfers

Verification: Verification is expected to be achieved through the following:

Verif. Method	Verif. By	Plan	Notes/Comments
R	ENG (IQRPE)	An IQRPE shall review the design to verify tank system spill prevention control design per established codes and standards in the BOD.	The IQRPE prepares a written assessment attesting that the tank system has sufficient structural integrity and is acceptable for the storing and treating of dangerous waste. The assessment demonstrates that the foundation, structural support, seams, connections, and pressure controls (if applicable) are adequately designed and that the tank system has sufficient structural strength, compatibility with the waste(s) to be stored or treated, and corrosion protection to ensure that it will not collapse, rupture, or fail.

3.4.2.28.3 Ancillary Equipment Secondary Containment

Requirement: LOP/LVP tank system ancillary equipment that manages dangerous waste shall be designed to have secondary containment (e.g., trench jacketing, double-walled piping). [Section 14.10.1.3, BOD][Section C.7(d)(3)(iv), WTP Contract]

Basis Discussion: Ancillary equipment means any device (e.g., piping, fittings, flanges, valves, and pumps) used to distribute, meter, or control the flow of dangerous waste from its point of generation to a tank system, between dangerous waste storage tanks, or to a point of disposal or shipment offsite.

For the purposes of the WTP project, in addition to the definition identified above, ancillary equipment may also include other in-line components containing dangerous waste such as breakpots, pulse pots, dampers, drains, overflows, jumpers, joggles, ejectors, strainers, reducers, misters, mixing tees, and certain heat exchangers associated with the piping. If unable to comply with the applicable design requirements, evaluate alternatives in accordance with WAC 173-303-640[4][f].

NOTE: Installation of LOP/LVP tank systems DWP SSCs is dependent upon incorporation of the revised design into the DWP. [ALARA]

Verification: Verification is expected to be achieved through the following:

Verif. Method	Verif. By	Plan	Notes/Comments
R	**ENG**	An IQRPE shall review the design to verify all requirements for ancillary equipment within the LOP/LVP tank system have been met.	The IQRPE prepares a written assessment attesting that the tank system has sufficient structural integrity and is acceptable for the storing and treating of dangerous waste. The assessment demonstrates that the foundation, structural support, seams, connections, and pressure controls (if applicable) are adequately designed and that the tank system has sufficient structural strength, compatibility with the waste(s) to be stored or treated, and corrosion protection to ensure that it will not collapse, rupture, or fail.

3.4.2.28.4 Dangerous Waste Tank System Inspection

Requirement: LOP/LVP tank system design shall provide means to perform the following:

- Inspect above ground portions of the tank systems for corrosion or releases of waste (WAC 173-303-640[6][b][i]).
- Provide the capability to review data gathered from leak detection equipment (e.g., leak detection, level detection, pressure or temperature gauges, monitoring wells) to ensure that the tank system is being operated per its design (WAC 173-303-640[6][b][ii]).
- Inspect the cathodic protection system, if present, per the following schedule (WAC 173-303-640[6][c]):
  - Within six months after the initial installation and annually thereafter (WAC 173-303-640[6][c][i])
  - Impressed current systems inspected and (or)or tested every other month (WAC 173-303-640[6][c][ii])

[Section 14.10, BOD][Section C.7(d)(3)(iv), WTP Contract]

Basis Discussion: Tank systems are designed to be inspected on a regular basis to identify leaks and faulty equipment. Each of the tank inspection requirements above is to be completed once per operating day per the DWP.

NOTE: Installation of LOP/LVP Tank systems DWP SSCs are dependent upon incorporation of the revised design into the DWP.

Verification: Verification is expected to be achieved through the following:

Verif. Method	Verif. By	Plan	Notes/Comments
R	**ENG (IQRPE)**	An IQRPE shall review the design to verify the means for inspecting tank systems, leak detection equipment, and corrosion cathodic protection in accordance with the requirement.	The IQRPE prepares a written assessment attesting that the tank system has sufficient structural integrity and is acceptable for the storing and treating of dangerous waste. The assessment demonstrates that the foundation, structural support, seams, connections, and pressure controls (if applicable) are adequately designed and that the tank system has sufficient structural strength, compatibility with the waste(s) to be stored or treated, and corrosion protection to ensure that it will not collapse, rupture, or fail.

3.4.2.28.5 Dangerous Waste Miscellaneous Waste Unit Design Requirements

Requirement: The LAW Facility LOP/LVP miscellaneous waste units that handle dangerous waste shall be designed in accordance with the requirements for tank system design and integrity assessments as identified in the DWP.

- Design the miscellaneous waste unit foundations to maintain the load imparted by the filled waste miscellaneous unit. (WAC 173-303-640[3][a][v][A]).
- Design waste miscellaneous waste unit ancillary equipment in such a way that it is supported and protected against physical damage and excessive stress due to settlement, vibration, expansion, or contraction. (WAC 173-303-640[3][f]).
- Design the waste miscellaneous waste unit to prevent escape of vapors, fumes, or other emissions into the air if the tank holds materials acutely or chronically toxic by inhalation (WAC 173-303-640[5][e]).

Note: Additional tank system design requirements are found in 24590-LAW-3ZD-20-00002, *LAW Facility Design Description*.

[Section 14.10.1, 14.13, BOD][Sections III.10.H.1.a.vii, III.10.H.1.a.viii, III.10.H.1.a.xxix, III.10.E.3.d, DWP][Section C.7(d)(3)(iv), WTP Contract]

Basis Discussion: A miscellaneous waste unit is defined by WAC 173-303-040 in the bullets below.

- A dangerous waste management unit is where dangerous waste is treated, stored, or disposed, and is not a container, tank, surface impoundment, pile, land treatment unit, landfill, incinerator, boiler, industrial furnace, underground injection well with appropriate technical standards under 40 CFR 146, *Underground Injection Control Program: Criteria and Standards*, containment building, corrective action management unit, temporary unit, staging pile, or unit eligible for a research, development, and demonstration permit under WAC 173-303-809.
- Design requirements in WAC 173-303-630 through 173-303-670, WAC 173-303-800 through 173-303-806, and 40 CFR 146 are appropriate for the miscellaneous unit(s) being permitted.

Verification: Verification is expected to be achieved through the following:

Verif. Method	Verif. By	Plan	Notes/Comments
R	**ENG (IQRPE)**	An IQRPE shall review the design to verify all requirements for miscellaneous units within the LOP/LVP have been met.	The IQRPE prepares a written assessment attesting that the miscellaneous unit has sufficient structural integrity and is acceptable for the storing and treating of dangerous waste. The assessment demonstrates that the foundation, structural support, seams, connections, and pressure controls (if applicable) are adequately designed and that the tank system has sufficient structural strength, compatibility with the waste(s) to be stored or treated, and corrosion protection to ensure that it will not collapse, rupture, or fail.

3.4.2.29 LOP/LVP Primary Confinement Boundary Components Design

3.4.2.29.1 Service Conditions Associated with Melter Offgas

Requirement: LOP/LVP primary confinement boundary components downstream (e.g., piping, in-line components, vessels) shall be designed for service conditions associated with melter offgas. LOP/LVP primary confinement boundary components shall be designed to maintain their integrity and functionality at evaluated temperatures and pressures for their respective locations in the system. [Sections 4.4.3.1.3, 4.4.3.1.4, Appendix A Table A-1, LAW-DSA]

Basis Discussion: The offgas confinement boundary mitigates the release of radioactive and chemically hazardous material by providing an elevated release.

Verification: Verification is expected to be achieved through the following:

Verif. Method	Verif. By	Plan	Notes/Comments
A	**ENG**	Perfrom analysis to determine the service conditions for the LOP/LVP primary confinement boundary components associated with melter offgas.	
R	**ENG**	Review design to verify LOP and LVP systems' primary confinement boundary components are designed to maintain their integrity and functionality at evaluated temperatures and pressures for their respective locations in the system.	

3.4.2.29.2 Service Conditions Associated with the LVP Exhauster Vacuum

Requirement: LOP/LVP primary confinement boundary components (e.g., piping, in-line components, vessels) shall be designed for service conditions associated with the LVP exhauster vacuum (LVP-EXHR-00001A/00001B/00001C). LOP/LVP primary confinement boundary components shall be designed to maintain integrity and functionality at the maximum vacuum capable of being experienced at their respective locations in the system. [Sections 4.4.3.1.3, 4.4.3.1.4, Appendix A Table A-1, LAW-DSA]

Basis Discussion: The offgas confinement boundary mitigates the release of radioactive and chemically hazardous material by providing an elevated release.

Verification: Verification is expected to be achieved through the following:

Verif. Method	Verif. By	Plan	Notes/Comments
A	**ENG**	Perform analysis to determine the service conditions for the LOP/LVP primary confinement boundary components associated with the LVP exhauster.	
R	**ENG**	Review design to verify LOP and LVP systems' primary confinement boundary components are designed to maintain their integrity and functionality the maximum vacuum capable of being experienced at their respective locations in the system.	

3.4.3 System Interface Requirements

3.4.3.1 Stack Monitoring

Requirement: The LOP and LVP systems shall be designed to provide the capabilities to interface with the SDJ non-radiological and radiological stack monitoring and sampling of vessel ventilation extracts from the facility. [Section 9.4.12, 9.4.12.2, BOD][Section C.7(d)(3)(iv), WTP Contract]

Basis Discussion: This requirement is to comply with 40 CFR 52, 40 CFR 61 and WAC 246-247. [ALARA]

Verification: Verification is expected to be achieved through the following:

Verif. Method	Verif. By	Plan	Notes/Comments
R	**ENG**	Review design to verify LOP and LVP systems' capabilities are provided to support the SDJ radiological and non-radiological monitoring and sampling interfaces.	

3.4.3.2 Deleted

3.4.3.3 Deleted

3.4.4 Other Technical, Specialty, Operations and Maintenance Requirements

3.4.4.1 Removal of Offgas Mechanical Equipment

Requirement: The LOP and LVP systems' replaceable mechanical equipment shall be designed to be removable through removal routes into maintenance areas. [Section 11.3.2.3, BOD]

Basis Discussion: The design of the replaceable mechanical offgas equipment provides the capability and sizing to be removed and moved though available routes to maintence areas. [ALARA]

Verification: Verification is expected to be achieved through the following:

Verif. Method	Verif. By	Plan	Notes/Comments
I	**ENG**	Perform inspection to verify the mechanical equipment is removable and sized to be movable through available routes to maintenance areas.	

3.4.4.2 Temporary Sampling Requirements

Requirement: The LOP and LVP systems shall provide access points for connecting or inserting temporary flow, pressure, and temperature measuring equipment for commissioning purposes, including additional manual sampling primarily from the offgas plant areas to accommodate the sampling requirements for environmental performance testing. [Section 8.2, 19.8, 19.12, ORD]

Basis Discussion: Additional manual sampling accommodates the additional sampling requirements for environmental performance testing. The Design, Research and Technology, Commissioning, and Environmental organizations jointly identify these requirements. The laboratory, or temporary laboratory, and associated infrastructure are to be available to support cold commissioning. The permanent Analytical Laboratory supports hot commissioning of the processing facilities.

Verification: Verification is expected to be achieved through the following:

Verif. Method	Verif. By	Plan	Notes/Comments
R	**ENG**	Perform design review to verify ports are available to support the manual sampling required to accommodate environmental performance testing.	May be documented in assessment/evaluation report.

3.4.4.3 Vessel Entry

Requirement: The LOP and LVP vessels design shall provide a means of gaining personnel access to each vessel to facilitate vessel integrity inspection, cleaning, and draining of contents. The access design shall include provisions for a temporary cover for commissioning purposes, including a mechanism to securely lock the cover in place and provide a positive seal. The design shall also include provisions for a permanent cover (with appropriate shielding) to be fitted in place for normal operations. [Section 19.10, ORD]

Basis Discussion: None.

Verification: Verification is expected to be achieved through the following:

Verif. Method	Verif. By	Plan	Notes/Comments
R	**ENG**	Review design to verify vessels can provide a means of gaining personnel access to each vessel to facilitate vessel integrity inspection, cleaning, and draining of contents.	

3.4.4.4 Pipe and Vessel Flushing

Requirement: The LOP and LVP systems' pipelines and vessels carrying contaminated or potentially contaminated liquid shall be designed to be fully drainable and flushable for cleaning. Physical provision shall be

made for cleaning and draining (to minimum heel volume) of hardware, vessels, and associated piping. [Section 14.2, 20.0, ORD]

Basis Discussion: None.

Verification: Verification is expected to be achieved through the following:

Verif. Method	Verif. By	Plan	Notes/Comments
R	**ENG**	Review design to verify pipelines and vessels, which carry or potentially carry contaminated liquid are fully drainable and flushable.	May be documented in assessment/evaluation report.

3.4.4.5 In-Line Flowmeter Bypasses

Requirement: The LOP and LVP systems' piping design shall include bypasses for in-line mounted flowmeters where flow interruption is not acceptable. [Section 11.16, ORD]

Basis Discussion: This allows for continuous operation of the process, if flowmeter design does not permit routine maintenance without removal from service.

Verification: Verification is expected to be achieved through the following:

Verif. Method	Verif. By	Plan	Notes/Comments
R	**ENG**	Review design to determine where flow interruption is not acceptable and verify bypasses for in-line mounted flowmeters are included.	May be documented in assessment/evaluation report.

3.4.4.6 Moved to section 3.6.4.2

3.4.4.7 Deleted – Combined with 3.4.4.11

3.4.4.8 Isolation and Test Points

Requirement: The LOP and LVP systems' designs shall provide isolation and test points with drain/bleed valves to allow for removal, replacement, and testing during normal operations. [Section 9.1, 19.14, ORD][Section 11.5.1, BOD]

Basis Discussion: None. [ALARA]

Verification: Verification is expected to be achieved through the following:

Verif. Method	Verif. By	Plan	Notes/Comments
R	**ENG**	Review design to verify isolation and test points with drain/bleed valves are provided for testing during normal operations.	

3.4.4.9 Deleted – Combined with 3.4.4.11

3.4.4.10 Deleted – Combined with 3.4.4.11

3.4.4.11 Process Isolation Provisions

Requirement: The LOP and LVP systems shall be designed to provide suitable isolation provisions that prevent unplanned siphoning, diffusion, backflow, or other methods of leakage of the contents to utilities and areas where the material is not intended. [Section 5.1.2, BOD][Section 7.1, 15.1, ORD]

Basis Discussion: Water connections to process/bulges have in-line check valves, and fluid addition connection points to vessels are typically in the head space areas above the vessel overflows. Designated backflow preventers are located where required by code to separate process water from potable water systems. [ALARA]

Verification: Verification is expected to be achieved through the following:

Verif. Method	Verif. By	Plan	Notes/Comments
R	**ENG**	Review design to verify suitable isolation provisions are provided to prevent diffusion, backflow, or other methods of leakage of the contents to areas where the material is not intended.	

3.4.4.12 Isolation Dampers and Valves

Requirement: The LOP and LVP systems shall be designed with isolation dampers/valves on fans and upstream and downstream of the filter banks. [Section 15.1, ORD]

Basis Discussion: Isolation dampers/valves installed upstream and downstream of the filter banks facilitate filter changing.

Verification: Verification is expected to be achieved through the following:

Verif. Method	Verif. By	Plan	Notes/Comments
R	**ENG**	Review design to verify isolation dampers/valves inclusion and location.	

3.4.4.13 Radiological Safety Bulges

Requirement: The LOP and LVP systems' designs shall provide an engineered method for removal of equipment from bulges, taking into consideration containment and radiation control. [Section 8.1.3, ORD]

Basis Discussion: None. [ALARA]

Verification: Verification is expected to be achieved through the following:

Verif. Method	Verif. By	Plan	Notes/Comments
R	**ENG**	Review design to verify the required engineered methods for removal of equipment from bulges are in place.	

3.4.4.14 Deleted

3.4.4.15 High Temperature Insulation and Protection

Requirement: The LOP and LVP systems' designs shall provide insulation or protection per Occupational Safety and Health Administration requirements for equipment that operates at high temperatures and in accessible areas where maintenance is required. [Section 15.1, ORD]

Basis Discussion: This applies to equipment greater than 140 degrees and in accessible areas (e.g., HEPA preheater, steam lines that serve LOP equipment, and mercury mitigation skid). The insulation is to be sectionalized and removable on equipment for which maintenance access is needed.

Verification: Verification is expected to be achieved through the following:

Verif. Method	Verif. By	Plan	Notes/Comments
R	**ENG**	Review design to verify insulation or protection per Occupational Safety and Health Administration requirements for equipment that operates at high temperatures and is in accessible areas.	

3.4.4.16 Pump Seals

Requirement: The LOP and LVP systems' pump seals design shall, upon failure, provide a pathway for hazardous liquids or gases away from personnel and the environment upon seal failure. [Section 14.1, ORD]

Basis Discussion: None. [ALARA]

Verification: Verification is expected to be achieved through the following:

Verif. Method	Verif. By	Plan	Notes/Comments
R	**ENG**	Review design to verify pump seals design provides a pathway for liquids or gases away from personnel or to and the environment upon failure.	

3.4.4.17 Decontamination

Requirement: The LOP and LVP systems' equipment subject to decontamination shall be designed to withstand this process without any reduction of functionality through degradation of the electrical, mechanical, or any other components involved. [Section 9.1, ORD]

Basis Discussion: The LOP/LVP equipment is covered by an ALARA design review (ADR) and this ADR number and revision is listed in the title block of each piping and instrumentation diagram (P&ID). The ADR covers/lists system design features applicable to ALARA. [ALARA]

Verification: Verification is expected to be achieved through the following:

Verif. Method	Verif. By	Plan	Notes/Comments
R	**ENG**	Review design to determine which equipment is subject to decontamination.	May be documented in assessment/evaluation report.

Verif. Method	Verif. By	Plan	Notes/Comments
R	ENG	Review the LOP and LVP design to verify equipment/components listed above can withstand decontamination without degradation or reduction in equipment functionality.	

3.4.4.18 Deleted

3.4.4.19 Instrument Cable Length

Requirement: The LOP and LVP systems' valves and instruments with measuring elements shall be designed with sufficient cable length so that the element can be withdrawn without disconnecting the cable terminations. [Section 11.16, ORD]

Basis Discussion: Instruments and valves that must be withdrawn and need to remain electrically connected are those instruments where the element must be removed for calibration (e.g. pH, flowmeters, temperature probes) where calibration would be indeterminate if the element had to be disconnected and reconnected after the calibration.

Verification: Verification is expected to be achieved through the following:

Verif. Method	Verif. By	Plan	Notes/Comments
I	ENG/ OPS	Inspect the system to verify valves and instruments with measuring elements have sufficient cable length so that the element can be withdrawn without disconnecting the cable terminations.	May be documented in assessment/evaluation report.

3.4.4.20 Instrument Protection

Requirement: Whenever possible, the LOP and LVP systems' valves and instruments shall be protected from adverse environmental conditions such as excessive heat, corrosion, vibration, and mechanical damage. [Section 11.16, ORD]

Basis Discussion: None.

Verification: Verification is expected to be achieved through the following:

Verif. Method	Verif. By	Plan	Notes/Comments
R	ENG	Review design to verify valves and instruments are protected from adverse environmental conditions such as excessive heat, corrosion, vibration, and mechanical damage.	May be documented in assessment/evaluation report.

3.4.4.21 Instrument Detector Location

Requirement: The LOP and LVP systems' instruments and detectors that require maintenance shall be located outside the C3 contamination areas. However, transducer panels housing liquid level systems and associated remote input and output, and pressure transducers, shall be in C3 classified areas as a precaution against back-contamination. [Section 11.16, ORD]

Basis Discussion: Locating transducer panels housing liquid level systems in the C3 classified areas serves as a precaution against back-contamination. [ALARA]

Verification: Verification is expected to be achieved through the following:

Verif. Method	Verif. By	Plan	Notes/Comments
R	**ENG**	Review design to verify instruments and detectors that require maintenance are located outside the C3 contamination areas.	

3.4.4.22 Instrument Remote Calibration

Requirement: The LOP and LVP systems' design shall have the capability to test and calibrate instrumentation from outside of remotely installed locations such as bulges. [Section 11.16, ORD]

Basis Discussion: None. [ALARA]

Verification: Verification is expected to be achieved through the following:

Verif. Method	Verif. By	Plan	Notes/Comments
R	**ENG**	Review design to verify instrumentation is capable of being tested and calibrated from outside of remotely installed locations.	

3.4.4.23 Instrument Cleanout Port

Requirement: The LOP and LVP systems shall include mechanical cleanout ports capability available for unplugging pneumercator tubes. [Section 11.16, ORD]

Basis Discussion: Cleanout ports facilitate cleanout if a plug occurs and flushing is unsuccessful.

Verification: Verification is expected to be achieved through the following:

Verif. Method	Verif. By	Plan	Notes/Comments
R	**ENG**	Review design to verify mechanical clean-out ports for unplugging pneumercator tubes are included.	

3.4.4.24 Instrument Calibrations

Requirement: The LOP and LVP systems' designs shall have the capability of performing instrument calibrations, preventive maintenance, routine calibrations, and periodic functional testing of protective circuits while the system is in normal operation. [Section 9.1, ORD]

Basis Discussion: The intent is to prevent shutdowns or reduction of operational capabilities to perform routine maintenance.

Verification: Verification is expected to be achieved through the following:

Verif. Method	Verif. By	Plan	Notes/Comments
R	**ENG**	Review design to verify systems can perform instrument calibrations, preventive maintenance, and performance of routine calibrations, preventive maintenance and periodic functional testing of protective circuits while the plant is in normal operation.	

3.4.4.25 Regulatory Inspection Provisions

Requirement: The LOP and LVP systems' equipment that contains dangerous (hazardous) wastes shall have inspection provisions. The capability to perform regulatory inspections of cell and cave floors, piping, and tanks shall be designed and included in the layout. Non-accessible cells and caves shall be provided with closed-circuit television inspection ports at strategic points (generally above sumps and near vulnerable items of equipment). [Sections 12.4, 14.13, ORD]

Basis Discussion: Inspection may be visual or by closed-circuit television system to allow for observation of any indication of leaks. [ALARA]

Verification: Verification is expected to be achieved through the following:

Verif. Method	Verif. By	Plan	Notes/Comments
R	**ENG**	Review design to verify equipment, which contains dangerous wastes, is capable of being inspected by visual or closed-circuit television.	Document in an evaluation/assessment
R	**ENG**	Review the design to confirm compliance of ability to perform regulatory inspections.	Document in an evaluation/assessment

3.4.4.26 Protection of SSCs from Adverse Environmental Conditions

Requirement: The LOP and LVP designs shall provide protection to valves and instruments from adverse environmental conditions such as excessive heat, corrosion, vibration, and mechanical damage. [Section 11.16, ORD]

Basis Discussion: Protection from adverse environmental conditions ensure the valves and instrument perform correctly throughout their design life.

Verification: Verification is expected to be achieved through the following:

Verif. Method	Verif. By	Plan	Notes/Comments
R	**ENG**	Review design to verify valves and instruments are protected from adverse environmental conditions	

3.4.4.27 Providing Thermowells for Temperature Elements

Requirement: The LOP and LVP system instrumentation design shall include temperature elements installed in thermowells to allow removal without interrupting the process. [Section 11.16, ORD]

Basis Discussion: None.

Verification: Verification is expected to be achieved through the following:

Verif. Method	Verif. By	Plan	Notes/Comments
R	**ENG**	Review design to verify it includes thermowells for temperature elements.	

3.5 Submerged Bed Scrubber – Primary Offgas Treatment System Requirements

3.5.1 Mission and Functional / Performance Requirements (Including States and Modes)

Not used.

3.5.2 Nuclear Safety, ALARA, Environmental, and Other Regulatory Requirements

3.5.2.1 Deleted

3.5.2.2 Deleted

3.5.2.3 SBS and SBS Condensate Cooling Pressure Relief

Requirement: SBS chilled water cooling coil pressure relief valves (PSV-1084, PSV-1149, PSV-2084, PSV-2149) shall maintain system pressure less than or equal to the design pressure of the cooling coil piping (internal to the vessel). SBS chilled water cooling coil pressure relief valves PSVs (LOP-PSV-1084/1149 and LOP-PSV-2084/2149) open at a pressure less than or equal to 125 psig. [Section 4.4.3.9.3, 4.4.3.9.4, Appendix A Table A-1, LAW-DSA]

Basis Discussion: Overpressure protection prevents flooding of the SBS and SBS condensate vessel due to in-leakage from chilled water flow when the chilled water flow is re-established. The pressure relief on the cooling lines associated with the SBS and SBS condensate vessels (internal chilled water cooling coil, and vessel cooling jackets) prevents failure of the cooling lines due to over pressurization when isolated. Without this safety function, flooding of the SBS and SBS condensate vessel can occur due to leakage into the vessel when the chilled water flow is re-established.

The pressure relief on each of the PSVs are set such that failure of the cooling water line cannot occur because of line isolation and heat-up. [ALARA]

Verification: Verification is expected to be achieved through the following:

Verif. Method	Verif. By	Plan	Notes/Comments
R	**ENG**	Review design to verify the melter offgas system SBS and SBS condensate chilled water cooling coils include overpressure protection and the pressure relief valves (PSV-1084, PSV-1149, PSV-2084, PSV-2149) open at a pressure ≤125 psig.	

3.5.2.4 Melter Offgas Confinement Boundary (Secondary Pathway)

Requirement: The offgas confinement boundary shall provide a release pathway to a normally unoccupied location upon loss of melter vacuum. The offgas confinement boundary shall provide a release pathway and discharge location in the process cell (L-0123/-0124). [Section 4.4.3.1.3, 4.4.3.1.4, Appendix A Table A-1, LAW-DSA] (A.1)

Basis Discussion: The confinement boundary mitigates the release of offgas to the melter gallery by providing a secondary release pathway to the unoccupied process cell. The melter shell (gas barrier) forms the outer confinement barrier for the melter plenum that is ventilated by the melter offgas system. [ALARA]**Verification:** Verification is expected to be achieved through the following:

Verif. Method	Verif. By	Plan	Notes/Comments
R	**ENG**	Review design to verify the melter offgas system (secondary pathway) provides a release pathway to a normally unoccupied location (L-0123/-0124) upon loss of melter vacuum.	

3.5.2.5 Deleted

3.5.2.6 Melter Special Relief Device

Requirement: The melter special relief device shall vent offgas to an unoccupied location before reaching a pressure that would overpressurize the melter. The special relief device shall lift at ≤ 10 in. W.G. and relieve rated flow at ≤ 13 in. W.G. [Sections 4.4.3.6.3, 4.4.3.6.4, Appendix A Table A-1, LAW-DSA]

Basis Discussion: The confinement boundary mitigates the release of offgas to the melter gallery by providing a secondary release pathway to the unoccupied process cell. The melter shell (gas barrier) forms the outer confinement barrier for the melter plenum that is ventilated by the melter offgas system. [ALARA]

Verification: Verification is expected to be achieved through the following:

Verif. Method	Verif. By	Plan	Notes/Comments
A/R	**ENG**	Analyze/review design of the melter offgas system secondary pathway to verify there is a special relief device that vents to an unoccupied location (process cell) at ≤ 10 in. W.G. and relieve rated flow at ≤ 13 in. W.G.	
T	**SU/COM**	Test to verify the melter special relief device lifts s at ≤ 10 in. W.G. and relieve rated flow at ≤ 13 in. W.G.	

3.5.2.7 SBS Design

3.5.2.7.1 SBS Design Life, Conditions, and Materials of Construction

Requirement: The SBS vessel, downcomer, distributor plate, and packing bed shell shall be designed for the life of the facility and design basis process conditions. The SBS vessel, downcomer, distributor plate, and packing bed shell shall be of welded, Hastelloy C-22 alloy construction. [Sections 4.4.3.8.3, 4.4.3.8.4, Appendix A Table A-1, LAW-DSA]

Basis Discussion: Non-replaceable, permanent LOP and LVP Plant equipment are designed to last the life of the facility (40 years), inclusive of maintenance (Section 3.4.1.5, above). Materials of construction selections consider the effects of chemical, radiological, and thermal exposure and are based on proven performance, value engineering principles, and fit-for-function principles (Section 3.4.1.6, above).

Verification: Verification is expected to be achieved through the following:

Verif. Method	Verif. By	Plan	Notes/Comments
R	**ENG**	Review design to verify design life of SBS vessel, downcomer, distributor plate, and packing bed shell is the same as the design life of the facility at design basis process conditions.	
R	**ENG**	Review design to verify the materials of construction of the SBS vessel, downcomer, distributor plate, and packing bed shell is welded, Hastelloy C-22 alloy.	

3.5.2.7.2 SBS Vessel Distributor Plate

Requirement: The SBS vessel distributor plate shall promote acceptable quenching of the melter offgas. The SBS vessel distributor plate shall discharge at approximately 35.5 inches above the vessel tangent line, and shall work in conjunction with the SBS Low Level Interlock to quench the offgas. [Sections 4.4.3.8.3, 4.4.3.8.4, Appendix A Table A-1, LAW-DSA]

Basis Discussion: The SBS Vessel distributor plate contributes to the prevention of the offgas system from overheating.

Verification: Verification is expected to be achieved through the following:

Verif. Method	Verif. By	Plan	Notes/Comments
A	**ENG**	Perform an analysis to determine the flow rate of the SBS vessel distributor plate to promote acceptable quenching of the melter offgas	
R	**ENG**	Review the design to verify conformance to the analyzed configuration.	
R	**ENG**	Review design to verify SBS vessel distributor plate discharge is at approximately 35.5 inches above the vessel tangent line, and works with the SBS Low Level Interlock.	

3.5.2.7.3 SBS Internal Chilled Water Cooling Coil Piping

Requirement: SBS chilled water cooling coil piping (internal to the vessel) shall be designed for confinement of the CHW and exposure to process conditions. SBS chilled water cooling coil piping (internal to the vessel) shall be designed to withstand at least 237°F and 125 psig. [Sections 4.4.3.9.3, 4.4.3.9.4, Appendix A Table A-1, LAW-DSA]

Basis Discussion: The design of the SBS internal chilled water cooling coil piping contributes to protecting against an SBS cooling water leak impacting SBS vessel level.

Verification: Verification is expected to be achieved through the following:

Verif. Method	Verif. By	Plan	Notes/Comments
R	**ENG**	Review design to verify the internal chilled water cooling coil piping is designed for CHW confinement, process conditions, and withstand at least 237°F and 125 psig.	

3.5.2.7.4 SBS External Cooling Jacket Pressure Relief Valves

Requirement: SBS external cooling jacket pressure relief valves (PSV-1086, PSV-1150, PSV-2086, PSV-2150) shall maintain system pressure less than or equal to the design pressure of the piping at the SBS interface. SBS external cooling jacket pressure relief valves PSVs (LOP-PSV-1086/1150 and LOP-PSV-2086/2150) shall open at a pressure less than or equal to 125 psig. [Sections 4.4.3.9.3, 4.4.3.9.4, Appendix A Table A-1, LAW-DSA]

Basis Discussion: The design of the SBS external cooling jacket pressure relief valves contribute to protecting against an SBS overpressure.

Verification: Verification is expected to be achieved through the following:

Verif. Method	Verif. By	Plan	Notes/Comments
R	**ENG**	Review design to verify the SBS external cooling jacket pressure relief valves (PSV-1086, PSV-1150, PSV-2086, PSV-2150) maintain system pressure by opening at a pressure ≤125 psig.	

3.5.3 System Interface Requirements

Not used.

3.5.4 Other Technical, Specialty, Operations and Maintenance Requirements

3.5.4.1 Deleted

3.5.4.2 Deleted

3.6 High Efficiency Particulate Air Filters Treatment System Requirements

3.6.1 Mission and Functional / Performance Requirements (Including States and Modes)

Not used.

3.6.2 Nuclear Safety, ALARA, Environmental, and Other Regulatory Requirements

3.6.2.1 Deleted

3.6.2.2 Deleted

3.6.2.3 BARCT HEPA Filter Total Design Flow

Requirement: Total design flow through each BARCT HEPA filter stage shall not exceed the maximum rated flowrate for the individual HEPA filter multiplied by the number of filters in the stage. [Emission unit 547, NOC 1057][Section C.7(d)(3)(iv), WTP Contract]

Basis Discussion: The differential pressure monitoring across each BARCT filter bank is intended for recording and trending.

Verification: Verification is expected to be achieved through the following:

Verif. Method	Verif By	Plan	Notes/Comments
R	**ENG**	Review the design to verify that the HEPA filter banks design flowrates are bounded by the combined individual design flowrates.	

3.6.2.4 HEPA Filter Train Maximum Pressure Drop

Requirement: The offgas shall be provided with a continuous flowpath to an elevated release point. The dP across the online HEPA filter train shall be less than 10 in. W.G. [Sections 4.4.3.1.3, 4.4.3.1.4, Appendix A Table A-1, LAW-DSA]

Basis Discussion: The confinement boundary mitigates the release of radioactive and chemically hazardous material by providing continuous flowthrough the melter offgas system exhausters and to the stack exit. [ALARA]

Verification: Verification is expected to be achieved through the following:

Verif. Method	Verif. By	Plan	Notes/Comments
A	**ENG/ SUP**	Perform an analysis to determine the pressure drop (maximum of 10 in. W.G.) through the HEPA filter train to ensure a continuous flowpath.	
R	**ENG**	Review design to verify alignment with analysis.	May be documented in assessment/evaluation report.

3.6.3 System Interface Requirements

Not used.

3.6.4 Other Technical, Specialty, Operations, and Maintenance Requirements

3.6.4.1 Deleted

3.6.4.2 Standby Filtration Systems

Requirement: The LVP system shall provide standby filtration systems that allows filters to be changed offline. [Section 15.1, ORD]

Basis Discussion: None.

Verification: Verification is expected to be achieved through the following:

Verif. Method	Verif. By	Plan	Notes/Comments
R	**ENG**	Review design to verify standby filtration systems are included and that they allow filters to be changed offline.	

3.7 Mercury Mitigation Skid – Secondary Offgas Treatment System Requirements

3.7.1 Mission and Functional / Performance Requirements (Including States and Modes)

Not used.

3.7.2 Nuclear Safety, ALARA, Environmental, and Other Regulatory Requirements

3.7.2.1 Deleted

3.7.2.2 Carbon Bed Adsorber Water Addition Flow Restriction Device

Requirement: The carbon bed water addition flow restriction device shall limit the water addition flow rate to the LAW carbon beds such that blockage of the melter offgas system does not occur for the duration of the cold cap burn off. The flowrate of fire water into the carbon bed shall be limited to 77.6 gal/min. [Sections 4.4.3.12.3, 4.4.3.12.4, Appendix A Table A-1, LAW-DSA]

Basis Discussion: The carbon bed adsorber water addition flow restriction device reduces the probability of a release of chemically hazardous material by limiting the maximum water addition rate to the LAW carbon beds which could cause blockage of the offgas system.

Verification: Verification is expected to be achieved through the following:

Verif. Method	Verif. By	Plan	Notes/Comments
A	**ENG**	Perform an analysis to verify that the maximum flow rate for water addition is ≤77.6 gal/min will no cause a blockage of the melter offgas system.	
R	**ENG**	Review design to verify that the flowrate of fire water into the carbon bed is limited to 77.6 gal/min.	

3.7.2.3 Deleted

3.7.2.4 Deleted

3.7.2.5 Ammonia Reagent System (LAW Facility Piping Confinement)

Requirement: The LAW Facility LVP piping (from LVP-V-01554 through the ammonia injection manifold) shall maintain confinement under the maximum negative pressure it can experience at its respective location in the system. The LAW Facility LVP piping (from LVP-V-01554 through the ammonia injection manifold) shall be designed for negative pressure less than or equal to -7.2 psig. [Sections 4.4.3.13.3, 4.4.3.13.4, Appendix A Table A-1, LAW-DSA]

Basis Discussion: The TCO skid equipment removes volatile organic compounds and NO_x from the offgas stream, and inject diluted anhydrous ammonia. Ammonia gas is injected to react with the oxides of nitrogen to reduce them to nitrogen gas and water. The ammonia dilution equipment is mounted on a skid and is in a dedicated room, separate from the TCO skid. The supply line is routed to the LVP ammonia/dilution skid where it is then combined with air supplied by transfer piping from a supply fan. The combined ammonia/air supply is then routed from the skid to the TCO. The confinement boundary for this SSC ends where the transfer piping enters the TCO unit..

Verification: Verification is expected to be achieved through the following:

Verif. Method	Verif. By	Plan	Notes/Comments
R	**ENG**	Review design to verify the piping between LVP-BLWS-00080 and the ammonia injection manifold is designed for negative pressure ≤ -7.2 psig.	

3.7.2.6 Ammonia Reagent System (LAW Facility AMR/LVP Piping)

Requirement: The LAW Facility AMR/LVP Piping shall maintain confinement under design basis pressures. The LAW Facility AMR/LVP Piping is designed for pressures equal to or less than 300 psig. [Sections 4.4.3.13.3, 4.4.3.13.4, Appendix A Table A-1, LAW-DSA]

Basis Discussion: The boundary limits for the AMR/LVP piping begin at the upstream flange of the isolation valve (AMR-V-40886 - located external to the LAW facility) on the ammonia pipeline exiting the ground at the southwest corner of the LAW Main Process building (24590-BOF-M6-AMR-00003001). The AMR/LVP piping and equipment will maintain primary confinement of the anhydrous ammonia. This requirement applies to the AMR system piping from the block/isolation valve where it enters the LAW building (on the roof) to where it joins with the LVP (melter offgas) system, including the ammonia dilution skid.

Verification: Verification is expected to be achieved through the following:

Verif. Method	Verif. By	Plan	Notes/Comments
R	**ENG**	Review design to verify the AMR/LVP piping is designed for pressures ≤ 300 psig.	

3.7.3 System Interface Requirements

Not used.

3.7.4 Other Technical, Specialty, Operations and Maintenance Requirements

3.7.4.1 Deleted

3.7.4.2 Deleted

3.8 Exhauster Fans - Secondary Offgas Treatment System Requirements

3.8.1 Mission and Functional / Performance Requirements (Including States and Modes)

3.8.1.1 Fan Auto-Changeover

Requirement: The LVP system shall provide fan auto-change capability that detects the failure of an operational fan and automatically starts the standby unit when required. [Section 15.1, ORD]

Basis Discussion: The melter offgas system uses three exhausters, with two normally running via the Integrated Control Network (ICN) control and the third in standby to increase the reliability of the SS safety function to provide adequate melter venting and vacuum pressure control. The fan auto-changeover engages the standby fan as necessary.

Verification: Verification is expected to be achieved through the following:

Verif. Method	Verif. By	Plan	Notes/Comments
R	**ENG**	Review design to verify the fan auto-changer capability detects the failure of an operational fan and automatically starts the standby unit when required.	

3.8.2 Nuclear Safety, ALARA, Environmental, and Other Regulatory Requirements

3.8.2.1 Offgas Exhauster

Requirement: The offgas exhausters shall include:

- The offgas exhausters shall provide sufficient motive force to exhaust the melter offgas out the top of the stack under: minimum operating flow, normal operating flow, maximum operating flow, system reconfiguration conditions (e.g., loss of power, safety interlock actuation), and seismic-induced loss of power.
- The offgas exhausters shall provide the required differential pressure to maintain vacuum on each melter plenum, up to 155.7 in W.C. (between exhauster suction and discharge).

- The offgas exhausters shall provide required flow through the system, up to 2,822 scfm.
- At least two offgas exhausters are operable during Operations mode.

[Section 4.4.3.17.3, 4.4.3.17.4, Appendix A Table A-1, LAW-DSA] (A.8)

Basis Discussion: The exhausters mitigate the consequences of a release of radioactive and chemically hazardous material by providing the motive force for an elevated release of melter offgas in the event normal offgas systems are bypassed, a fire in the carbon bed material releases additional hazardous material, or a failure causes excess hazardous material (ammonia, NO_x, SO_x) to be released. [ALARA]
Verification: Verification is expected to be achieved through the following:

Verif. Method	Verif. By	Plan	Notes/Comments
A	**ENG**	Perform an analysis to determine sufficient motive force to exhaust the melter offgas out the top of the stack under: – minimum operating flow – normal operating flow – maximum operating flow – system reconfiguration conditions (e.g., loss of power, safety interlock actuation) – seismic-induced loss of power. The offgas exhausters maintain vacuum on each melter plenum, up to 155.7 in W.C. (between exhauster suction and discharge) with flow through the system, up to 2,822 scfm..	
R	**ENG**	Review design to verify the alignment with the analysis.	
R	**ENG**	Review design to verify that at least two offgas exhausters operate during Operations mode.	
T	**SU/ COM**	Test the offgas exhauster to verify sufficient motive force to exhaust the melter offgas out the top of the stack under minimum operating flow.	

3.8.2.2 Deleted

3.8.2.3 Deleted

3.8.2.4 Deleted

3.8.2.5 Deleted

3.8.2.6 Deleted – Combined with 3.4.2.20

3.8.2.7 Offgas Exhauster Back-up Air to the Exhauster Shaft Purge Air Seals

Requirement: The backup air supply shall contain a sufficient air supply for the exhauster shaft seals to maintain confinement for the duration for the substantial cold cap burn off. The system shall have an air supply capacity equal to or exceeding 7.4 cubic feet. [Sections 4.4.4.1.21.3, 4.4.4.1.21.4, Appendix A Table A-1, LAW-DSA]

Basis Discussion: This mitigates the release of radioactive and chemically hazardous material through the exhauster shaft seals by supplying back-up air pressure to the exhauster shaft seals. The flowrates used in the

calculation that determined the air supply capacity (volume – ft^3) were calculated with standard conditions (SCFM). [ALARA]

Verification: Verification is expected to be achieved through the following:

Verif. Method	Verif. By	Plan	Notes/Comments
A	**ENG**	Perform an analysis to determine the amount of back-up air (≥ 7.4 ft^3) needed for the exhauster shaft purge air seals.	May be documented in assessment/evaluation report.
R	**ENG**	Review design to verify alignment with analysis.	May be documented in assessment/evaluation report.
T	**SU/ COM**	Test that the backup air supply of 7.4 ft^3 for the exhauster shaft seals will maintain confinement for the duration for the substantial cold cap burn off.	

3.8.2.8 Offgas Exhauster Back-up Air Surge Capacity

Requirement: The backup air supply shall contain sufficient surge capacity to maintain the shaft seal supply pressure. The system shall have a surge capacity equal to or exceeding 0.2 cubic feet. [Sections 4.4.4.1.20.3, 4.4.4.1.20.4, Appendix A Table A-1, LAW-DSA]

Basis Discussion: This mitigates the release of radioactive and chemically hazardous material through the exhauster shaft seals by supplying back-up air pressure to the exhauster shaft seals. The flowrates used in the calculation that determined the surge capacity (volume – ft^3) were calculated with standard conditions (SCFM). [ALARA]

Verification: Verification is expected to be achieved through the following:

Verif. Method	Verif. By	Plan	Notes/Comments
A	**ENG**	Perform an analysis to determine the amount of back-up air surge capacity (≥ 0.2 ft^3) needed to maintain the shaft seal supply pressure.	May be documented in assessment/evaluation report.
R	**ENG**	Review design to verify alignment with analysis.	May be documented in assessment/evaluation report.
T	**SU/ COM**	Test that the surge capacity of 0.2 ft^3 for the backup air supply will maintain the shaft seal supply pressure.	

3.8.3 System Interface Requirements

Not used.

3.8.4 Other Technical, Specialty, Operations, and Maintenance Requirements

Not used.

3.9 Monitoring and Control Requirements

3.9.1 Mission and Functional / Performance Requirements (Including States and Modes)

3.9.1.1 Control and Instrumentation Reaction Times

Requirement: The LOP and LVP systems' control and instrumentation systems shall provide for automated responses without relying on operator manual action for at least 30 minutes after the onset of a credible failure event (such as piping leak, leaking isolation valve). [Section 11.10, ORD]

Basis Discussion: 30-minute criteria allows time for operator detection and response.

Verification: Verification is expected to be achieved through the following:

Verif. Method	Verif. By	Plan	Notes/Comments
A	**ENG**	Perform and analysis to determine when automated response would be required within 30 minutes	
R	**ENG**	Review design to verify the ability of the system to provide an automated response within 30 minutes.	

3.9.2 Nuclear Safety, ALARA, Environmental, and Other Regulatory Requirements

3.9.2.1 General Safety

3.9.2.1.1 Active Safety Instruments – Programmable Protection System

Requirement: The LOP and LVP systems' instruments with active safety functions are required to interface with the PPJ system or be engineered as local safety instrumented functions. Signal interfaces shall use a standard 4-20 mA or digital contacts. [Section 7.1, BOD][Section 15.1, ORD]

Basis Discussion: Appendix C provides a list of the LOP and LVP active safety instrumented functions and implementing components for the LOP and LVP system.

Verification: Verification is expected to be achieved through the following:

Verif. Method	Verif. By	Plan	Notes/Comments
R	**ENG**	Review the system design to verify active SS instrumented functions are controlled and monitored by the PPJ system.	

3.9.2.1.2 Implementation of Active Safety Instrumented Functions

Requirement: The active safety instrumented functions for the LOP and LVP systems shall be designed in accordance with the SRD, safety criteria 4.3-1, 4.3-3, 4.3-4, 4.3-6, 4.4-1, and 4.4-2. [Safety Criteria 4.3-1, 4.3-3, 4.3-4, 4.3-6, 4.4-1, 4.4-2, SRD]

Basis Discussion: The SRD establishes the criterion and applicable standards for the safety design. The design processes including 24590-WTP-GPG-J-015, *Safety Instrumented System Implementation*, and electrical design criteria are used to ensure independence and that the design complies with the mandated standards.

Verification: Verification is expected to be achieved through the following:

Verif. Method	Verif. By	Plan	Notes/Comments
R	**ENG**	Verify the safety systems requirements specifications and designs are in accordance with the criterion and standards in the SRD, safety criteria 4.3-1, 4.3-3, 4.3-4, 4.3-6, 4.4-1, and 4.4-2.	May be documented in assessment/evaluation report.

3.9.2.1.3 Instrument and Interlock Seismic Design

Requirement: The LOP and LVP systems' instrument interlocks (sensing instrumentation to the final elements actuated by interlocks) shall meet SC-III requirements. Based on natural phenomena and confinement considerations, the offgas system instrument interlocks listed in Table 3-4, shall be designed to meet SC-III requirements and perform their safety function under design basis seismic loads. [Safety Criterion 4.1-3, SRD][Sections 4.4.3.15.3, 4.4.3.15.4, 4.4.4.1.1.3, 4.4.4.1.1.4, 4.4.4.1.4.3, 4.4.4.1.4.4, 4.4.4.1.5.3, 4.4.4.1.5.4, 4.4.4.1.6.3, 4.4.4.1.6.4, 4.4.4.1.7.3, 4.4.4.1.7.4, 4.4.4.1.8.3, 4.4.4.1.8.4, 4.4.4.1.9.3, 4.4.4.1.9.4, 4.4.4.1.10.3, 4.4.4.1.10.4, 4.4.4.1.11.3, 4.4.4.1.11.4, 4.4.4.1.12.3, 4.4.4.1.12.4, 4.4.4.1.13.3, 4.4.4.1.13.4, 4.4.4.1.15.3, 4.4.4.1.15.4, 4.4.4.1.16.3, 4.4.4.1.16.4, 4.4.4.1.17.3, 4.4.4.1.17.4, 4.4.4.1.18.3, 4.4.4.1.18.4, 4.4.4.1.19.3, 4.4.4.1.19.4, 4.4.4.1.20.3, 4.4.4.1.20.4, 4.4.4.1.21.3, 4.4.4.1.21.4, 4.4.4.1.22.3, 4.4.4.1.22.4, Appendix A Table A-1, LAW-DSA]

Table 3-4 Instruments, Valves and Interlock Requiring Seismic Functionality

Interlock	Seismic Category	Reference
Primary/Standby Film Cooler Low Flow Interlock	SC-III	Sections 4.4.4.1.4.3, 4.4.4.1.4.4, Appendix A Table A-1, LAW-DSA
SBS Low Level Interlocks (hydraulic seal function)	SC-III	Sections 4.4.4.1.5.3, 4.4.4.1.5.4, Appendix A Table A-1, LAW-DSA
SBS High Level Interlock	SC-III	Sections 4.4.4.1.6.3, 4.4.4.1.6.4, Appendix A Table A-1, LAW-DSA
WESP High Level Interlock	SC-III	Sections 4.4.4.1.7.3, 4.4.4.1.7.4, Appendix A Table A-1, LAW-DSA
Offgas HEPA Preheater High Temperature Interlock	SC-III	Sections 4.4.4.1.8.3, 4.4.4.1.8.4, Appendix A Table A-1, LAW-DSA
Offgas Header High and Low Pressure Interlocks	SC-III	Sections 4.4.4.1.9.3, 4.4.4.1.9.4, 4.4.4.1.10.3, 4.4.4.1.10.4, Appendix A Table A-1, LAW-DSA
TCO Heater High Temperature Interlock	SC-III	Sections 4.4.4.1.12.3, 4.4.4.1.12.4, Appendix A Table A-1, LAW-DSA
TCO Skid High Temperature Interlock	SC-III	Sections 4.4.4.1.13.3, 4.4.4.1.13.4, Appendix A Table A-1, LAW-DSA
Caustic Scrubber Recirculation Low Pressure Interlock	SC-III	Sections 4.4.4.1.17.3, Section 4.4.4.1.17.4, Appendix A Table A-1, LAW-DSA
Caustic Scrubber Recirculation Low Flow Interlock	SC-III	Sections 4.4.4.1.18.3, 4.4.4.1.18.4, Appendix A Table A-1, LAW-DSA
Caustic Scrubber Process Water Supply Low Pressure Interlock	SC-III	Sections 4.4.4.1.19.3, 4.4.4.1.19.4, Appendix A Table A-1, LAW-DSA

Interlock	Seismic Category	Reference
Offgas Exhauster 1A/1B/1C Shaft Seal Air Supply Low Pressure Interlock (including backup air supply)	SC-III	Sections 4.4.4.1.21.3, 4.4.4.1.21.4, Appendix A Table A-1, LAW-DSA
Offgas Exhauster 1A/1B/1C Shaft Seal Low Pressure Interlock (including backup air supply)	SC-III	Sections 4.4.4.1.20.3, 4.4.4.1.20.4, Appendix A Table A-1, LAW-DSA
Melter Plenum High Pressure Interlock (LMP)	SC-III	Sections 4.4.4.1.1.3, 4.4.4.1.1.4, Appendix A Table A-1, LAW-DSA
Loss of Normal Power to Safety Equipment Interlock (UPE)	SC-III	Sections 4.4.4.1.22.3, 4.4.4.1.22.4, Appendix A Table A-1, LAW-DSA
Pneumatic Permissive	SC-III	Sections 4.4.3.15.3, 4.4.3.15.4, Appendix A Table A-1, LAW-DSA
Carbon Bed High Differential CO Concentration Interlock	SC-III	Sections 4.4.4.1.11.3, 4.4.4.1.11.4, Appendix A Table A-1, LAW-DSA
Ammonia High Flow Interlock	SC-III	Sections 4.4.4.1.15.3, 4.4.4.1.15.4, Appendix A Table A-1, LAW-DSA
Ammonia Dilution Air Low Flow Interlock	SC-III	Sections 4.4.4.1.16.3, 4.4.4.1.16.4, Appendix A Table A-1, LAW-DSA

Basis Discussion: The seismic requirement reduces the probability of a release of radioactive and chemically hazardous material by insuring the functionality during the seismic events.

Verification: Verification is expected to be achieved through the following:

Verif. Method	Verif. By	Plan	Notes/Comments
A	**ENG**	Perform an analysis to verify the ability of the interlock to perform in seismic events of intensity up to and including the design basis earthquake.	
R	**ENG**	Review design to verify alignment with analysis.	May be documented in assessment/evaluation report.

3.9.2.2 LOP Melter Train Interlocks

The melter train interlocks are duplicated in each melter train. Melter train one contains the same interlocks as melter train two.

3.9.2.2.1 Primary/Standby Film Cooler Low Flow (High Outlet Temperature) Interlock

Requirement: Upon detection of primary or standby film cooler injection air low flow (Melter 1 Primary - LOP-FT-1408/1409, Melter 1 Standby - LOP-FT-1410/1411, Melter 2 Primary - LOP-FT-2408/2409, Melter 2 Standby - LOP-FT-2410/2411), the interlock shall initiate film cooler emergency cooling to the affected melter by opening the appropriate valves (final elements listed below). The interlock shall ensure sources of air to the affected film coolers are open to prevent offgas piping (from film cooler through the SBS downcomer) temperatures from exceeding 1112 °F.

- Melter 1:
  - Standby offgas line valve (LOP-YV-1008)
  - Primary offgas film cooler inbleed (LOP-YV-1401/1407)

- Standby offgas film cooler inbleed (LOP-YV-1402/1406)

- Melter 2:
  - Standby offgas line valve (LOP-YV-2008)
  - Primary offgas film cooler inbleed (LOP-YV-2401/2407)
  - Standby offgas film cooler inbleed (LOP-YV-2402/2406)

[Sections 4.4.4.1.4.3, 4.4.4.1.4.4, Appendix A Table A-1, LAW-DSA] (D.2)

Basis Discussion: The interlock reduces the probability of a release of radioactive and chemically hazardous material by preventing a failure of the offgas system confinement boundary caused by high offgas temperatures due to low film cooler air supply.

The film cooler high temperature interlock monitors the film cooler airflow to ensure adequate cooling air flow, thereby preventing the temperature of the offgases from increasing to the point of confinement boundary failure.

Verification: Verification is expected to be achieved through the following:

Verif. Method	Verif. By	Plan	Notes/Comments
A	**ENG**	Perform an analysis to determine the low film cooler supply airflow setpoint that prevent offgas piping (from film cooler through the SBS downcomer) temperatures from exceeding 1112 °F.	May be documented in assessment/ evaluation report. The setpoint calculation (24590-LAW-J3C-PPJ-00018) protects the analytical limit to account for instrument uncertainties, resulting in a limiting trip setpoint (LTSP) to activate the interlock to open air inbleed valves to the affected film coolers at 147.3 ACFM (primary cooler) and 7.5 ACFM (standby cooler) prevent offgas piping temperatures from exceeding 1112 °F.
R	**ENG**	Review design to verify there are interlock instruments and components that: • Monitor the cooling airflow and initiate the interlock. • Open the melter offgas emergency air inbleeds on the primary and standby film coolers for the affected melter. • Open the associated bypass valve from the standby film cooler to the SBS.	
T	**SU/ COM**	Perform a test to verify the interlock: • Monitors the cooling airflow and initiates the interlock • Opens the melter offgas emergency air inbleeds on the primary and standby film coolers for the affected melter. • Opens the associated bypass valve from the standby film cooler to the SBS.	

3.9.2.2.1.1 Failed Primary/Standby Film Cooler Low Flow Interlocked Components (failed final control SIS elements)

Requirement: The interlocked components that can fail in a manner that causes a release shall fail to a safe position on loss of control signal or air. The PPJ melter standby film cooler isolation valve (Melter 1 - LOP-YV-1008, Melter 2 - LOP-YV-2008) shall be designed to fail in an open position on loss of control signal or loss of air to the valve. The PPJ melter 1 and 2 primary film cooler emergency air inbleed valve (Melter 1 - LOP-YV-1401/1407, Melter 2 - LOP-YV-2401/2407) shall be designed to fail in an open position on loss of control signal or loss of air to the valve. The PPJ melter standby film cooler emergency air inbleed valve (Melter 1 - LOP-YV-1402/1406, Melter 2 - LOP-YV-2402/2406) shall be designed to fail in an open position on loss of control signal or loss of air to the valve. [Sections 4.4.4.1.4.3, 4.4.4.1.4.4, Appendix A Table A-1, LAW-DSA]

Basis Discussion: By preventing the final control elements of the SIS from failing in a manner that would cause a release, the failure position of these components reduces the probability of a release of radioactive and chemically hazardous material.

Verification: Verification is expected to be achieved through the following:

Verif. Method	Verif. By	Plan	Notes/Comments
R	**ENG**	Review the design for incorporation of the failure position on loss of control signal or air to the valve (s): • melter standby film cooler isolation valve - fails in an OPEN position • melter 1 and 2 primary film cooler emergency air inbleed valves - fail in an OPEN position • melter standby film cooler emergency air inbleed valves - fail in an OPEN position	
T	**SU/ COM**	Perform a test to verify the failure position on loss (or simulated loss) of control signal or air to the valve (s): • melter standby film cooler isolation valve - fails in an OPEN position • melter 1 and 2 primary film cooler emergency air inbleed valves - fail in an OPEN position • melter standby film cooler emergency air inbleed valves - fail in an OPEN position	

3.9.2.2.2 Wet Electrostatic Precipitator (WESP) High Level Interlock

Requirement: Upon detection of a high WESP water level (Melter 1 - LOP-LT-1059, Melter 2 - LOP-LT-2059), the interlock shall reduce the rate of increase in affected WESP water level by closing the WESP Water Supply Valves (Melter 1 - LOP-YV-1061, Melter 2 - LOP- YV-2061). The interlock shall isolate DIW sources to prevent the WESP water level from exceeding the bottom of the offgas inlet nozzle (18.5 inches above the bottom head-to-vessel weld line). [Sections 4.4.4.1.7.3, 4.4.4.1.7.4, Appendix A Table A-1, LAW-DSA] (D.2)

Basis Discussion: The WESP demineralized water flush valve closes to shut off demineralized flush water to the WESP to prevent WESP flooding that can restrict flow of the offgas melter line, resulting in a melter offgas release event.

Verification: Verification is expected to be achieved through the following:

Verif. Method	Verif. By	Plan	Notes/Comments
A	**ENG**	Perform an analysis to determine the setpoint (<18.5 inches above the bottom head-to-vessel weld line) for high WESP liquid level interlock.	24590-LAW-J3C-PPJ-00002, Rev. B, states in Section 2.6.7, the lowest measured level (0 inches) corresponds to 5.5625 inches above the bottom WESP head-to-vessel weld line. 18.5 inches above the bottom head-to-vessel weld line is considered the Deisgn Limit in the calculation. The difference is 12.93 inches.
R	**ENG**	Review design to verify there are interlock instruments and components that: • Monitor the WESP liquid level and initiates the interlock. • Isolate the demineralization water supply to the WESP.	
T	**SU/ COM**	Perform a test to verify the interlock: • Monitors the WESP liquid level and initiates the interlock. • Isolates the demineralization water supply to the WESP.	

3.9.2.2.2.1 Failed WESP High Level Interlocked Components (failed final control SIS elements)

Requirement: Interlocked components that can fail in a manner that causes a release shall fail to a safe position on loss of control signal or air. The PPJ WESP water addition supply valve (Melter 1 - LOP-YV-1061, Melter 2 - LOP- YV-2061) is designed to fail in a closed position on loss of control signal or loss of air to the valve. [Sections 4.4.4.1.7.3, Appendix A Table A-1, LAW-DSA]

Basis Discussion: By preventing the final control elements of the SIS from failing in a manner that would cause a release, the failure position of these components reduces the probability of a release of radioactive and chemically hazardous material.

Verification: Verification is expected to be achieved through the following:

Verif. Method	Verif. By	Plan	Notes/Comments
R	ENG	Review the design for incorporation of the failure position on loss of control signal or air to the valve (s): • PPJ WESP water addition supply valve - fails in a CLOSED position	
T	SU/ COM	Perform a test to verify the failure position on loss (or simulated loss) of control signal or air to the valve (s): • PPJ WESP water addition supply valve - fails in a CLOSED position	

3.9.2.2.3 SBS High Level Interlock

3.9.2.2.3.1 SBS High Level Interlock (Terminate Sources of Water)

Requirement: Upon detection of high SBS water level (Melter 1 - LOP-LT-1011, Melter 2 - LOP-LT-2011), the interlock shall reduce the rate of increase in SBS water level by closing the demineralized water and ADS water supply valves (final elements listed below). The interlock shall terminate sources of water if the water level in LOP-SCB-00001/00002 exceeds greater than or equal to 34.94 in. above the discharge of the downcomer (69.94 in. above the vessel tangent).

- Melter 1:
  - Demin. water to LOP-BULGE-00001 (LOP-YV-1148)
  - Demin. water to LOP-PMP-00001/00002 (LOP-YV-1156/1157)
  - ADS water supply valves (LFP-YV-1207/1211)
- Melter 2:
  - Demin. water to LOP-BULGE-00002 (LOP-YV-2148)
  - Demin. water to LOP-PMP-00004/00005 (LOP-YV-2156/2157)
  - ADS water supply valves (LFP-YV-2207/2211)

[Sections 4.4.4.1.6.3, 4.4.4.1.6.4, Appendix A Table A-1, LAW-DSA] (D.2)

Basis Discussion: The interlock reduces the probability of a release of radioactive and chemically hazardous material by preventing a blockage of the offgas system at the SBS caused by high SBS liquid levels.

Verification: Verification is expected to be achieved through the following:

Verif. Method	Verif. By	Plan	Notes/Comments
A	**ENG**	Perform an analysis to determine the setpoint (<34.94 inches above the discharge of the downcomer (69.94 inches above the vessel tangent line)) for high SBS liquid level interlock.	
R	**ENG**	Review design to verify there are interlock instruments and components that: • Monitor the SBS liquid level and initiate the interlock. • Isolate the demineralized water being supplied to the associated process cell valve bulge and the associated SBS condensate purge pump priming lines.	
T	**SU/ COM**	Perform a test to verify the interlock: • Monitors the SBS Liquid level and initiates the interlock. • Isolates the demineralized water being supplied to the associated process cell valve bulge and the associated SBS condensate purge pump priming lines.	

3.9.2.2.3.2 SBS High Level Interlock (Terminate Air Supply)

Requirement: Upon detection of high SBS water level (Melter 1 - LOP-LT-1011, Melter 2 - LOP-LT-2011), the interlock shall terminate feed to the affected melter by closing the ADS pump air valves (Melter 1 - LFP-YV-1208/1212, Melter 2 - LFP-YV-2208/2212). The interlock shall terminate ADS pump air supply upon a water level in LOP-SCB-00001/00002 exceeds greater than or equal to 34.94 in. above the discharge of the downcomer (69.94 in. above the vessel tangent line). [Sections 4.4.4.1.6.3, 4.4.4.1.6.4, Appendix A Table A-1, LAW-DSA] (D.2)

Basis Discussion: The interlock reduces the probability of a release of radioactive and chemically hazardous material by preventing a blockage of the offgas system at the SBS caused by high SBS liquid levels.

Verification: Verification is expected to be achieved through the following:

Verif. Method	Verif. By	Plan	Notes/Comments
A	**ENG**	Perform an analysis to determine the setpoint (<34.94 inches above the discharge of the downcomer (69.94 inches above the vessel tangent line)) for high SBS liquid level interlock.	
R	**ENG**	Review design to verify there are interlock instruments and components that: • Monitor the SBS liquid level and initiate the interlock. • Isolate the feed pump plant air supply valve	
T	**SU/ COM**	Perform a test to verify the interlock: • Monitors the SBS Liquid level and initiates the interlock. • Isolates the feed pump plant air supply valve	

3.9.2.2.3.3 Failed SBS High Level Interlocked Components (failed final control SIS elements)

Requirement: The interlocked components that can fail in a manner that causes a release shall fail to a safe position on loss of control signal or air. The PPJ melter SBS condensate bulge flush supply valve (Melter 1 - LOP-YV-1148, Melter 2 - LOP-YV-2148) shall be designed to fail in a closed position on loss of control signal or loss of air to the valve. The PPJ melter SBS condensate recirculation pump priming valve (Melter 1 - LOP-YV-1156/1157, Melter 2 - LOP-YV-2156/2157) shall be designed to fail in a closed position on loss of control signal or loss of air to the valve. [Sections 4.4.4.1.6.3, 4.4.4.1.6.4, Appendix A Table A-1, LAW-DSA]

Basis Discussion: By preventing the final control elements of the SIS from failing in a manner that would cause a release, the failure position of these components reduces the probability of a release of radioactive and chemically hazardous material.

Verification: Verification is expected to be achieved through the following:

Verif. Method	Verif. By	Plan	Notes/Comments
R	**ENG**	Review the design for incorporation of the failure position on loss of control signal or air to the valve (s): • melter SBS condensate bulge flush supply valve - fails in a CLOSED position • melter SBS condensate recirculation pump priming valves - fail in a CLOSED position	
T	**SU/ COM**	Perform a test to verify the failure position on loss (or simulated loss) of control signal or air to the valve (s): • melter SBS condensate bulge flush supply valve - fails in a CLOSED position • melter SBS condensate recirculation pump priming valves - fail in a CLOSED position	

3.9.2.2.4 SBS Low Level Interlock

3.9.2.2.4.1 SBS Low Level Interlock (Limit Offgas Generation)

Requirement: Upon detection of low SBS level (Melter 1 - LOP-LT-1011, Melter 2 - LOP-LT-2011), the interlock shall limit offgas generation from both melters by closing the ADS valves (Melter 1 - LFP-YV-1208/1212, Melter 2 - LFP-YV-2208/2212). The interlock shall terminate melter feed and limit the offgas generation if the SBS liquid level decreases to less than or equal to 24.64 in. above the discharge of the downcomer (59.64 in. above the vessel tangent) for 2 hr substantial cold cap burnoff duration. [Sections 4.4.4.1.5.3, 4.4.4.1.5.4, Appendix A Table A-1, LAW-DSA] (D.2)

Basis Discussion: The interlock reduces the probability of a release of radioactive and chemically hazardous material by preventing a failure of the offgas system confinement boundary caused by high offgas temperatures.

The interlock limits the release of radioactive and chemically hazardous material ensuring offgas cannot flow through the SBS liquid barrier and cause a failure of the offgas exhaust system. This ensures the SBS has sufficient liquid to cool and quench the melter offgas as well as sufficient level to protect the melter from experiencing excessive vacuum.

Verification: Verification is expected to be achieved through the following:

Verif. Method	Verif. By	Plan	Notes/Comments
A	**ENG**	Perform an analysis to determine the SBS low level setpoint ≥ 24.64 inches above the discharge of the downcomer (59.64 inches above the vessel tangent).	
R	**ENG**	Review design to verify there are interlock instruments and components that: • Monitor the SBS Liquid Level and initiate the interlock. • Stop air to the ADS pumps for the melter. (LFP).	
T	**SU/ COM**	Perform a test to verify the interlock: • Monitor the SBS Liquid Level and initiate the interlock. • Stop air to the ADS pumps for the melter. (LFP).	

3.9.2.2.4.2 SBS Low Level Interlock (Maintain Primary Pathway)

Requirement: Upon detection of low SBS level (Melter 1 - LOP-LT-1011, Melter 2 - LOP-LT-2011), the interlock, to maintain downstream melter offgas system primary pathway temperatures within design basis range, shall terminate transfers out of the affected SBS by electrical isolation of the SBS purge water pumps (Melter 1 - LOP-CTR-20003A/20003B, Melter 2 - LOP-CTR-20006A/20006B). The interlock shall terminate transfers out of the affected SBS by turning off the SBS water purge pumps if the SBS liquid level decreases to less than or equal to 24.64 in. above the discharge of the downcomer (59.64 in. above the vessel tangent) for a 2 hr substantial cold cap burnoff duration. [Sections 4.4.4.1.5.3, 4.4.4.1.5.4, Appendix A Table A-1, LAW-DSA] (D.2)

Basis Discussion: The interlock reduces the probability of a release of radioactive and chemically hazardous material by preventing a failure of the offgas system confinement boundary caused by high offgas temperatures by providing a hydraulic seal to isolate offgas flow from the melter to beyond the SBS upon loss of system vacuum.

The interlock limits the release of radioactive and chemically hazardous material ensuring offgas cannot flow through the SBS liquid barrier and cause a failure of the offgas exhaust system. This ensures the SBS has sufficient liquid to cool and quench the melter offgas as well as sufficient level to protect the melter from experiencing excessive vacuum.

Verification: Verification is expected to be achieved through the following:

Verif. Method	Verif. By	Plan	Notes/Comments
A	**ENG**	Perform an analysis to determine the SBS low level setpoint ≥ 24.64 inches above the discharge of the downcomer (59.64 inches above the vessel tangent).	
R	**ENG**	Review design to verify there are interlock instruments and components that: • Monitor the SBS Liquid Level and initiate the interlock. • Isolates power to the SBS water purge pumps.	
T	**SU/ COM**	Perform a test to verify the interlock: • Monitor the SBS Liquid Level and initiate the interlock. • Isolates power to the SBS water purge pumps.	

3.9.2.3 LVP High-Efficiency Particulate Air Filter Interlocks

3.9.2.3.1 Offgas HEPA Preheaters High Temperature Interlock

3.9.2.3.1.1 Offgas HEPA Preheaters High Temperature Interlock (Maintain Primary Pathways)

Requirement: Upon detection of high offgas temperature (LVP-TT-0136/0137), the interlock shall maintain downstream melter offgas system primary pathway temperatures within design basis range by de-energizing the preheaters (LVP-CTR-00001A/00003A). The interlock shall terminate power to the LVP HEPA filter preheaters (LVP-CTR-00001A/00003A) to prevent the HEPA filter housing (limiting SSC) temperature from exceeding 192 °F. To protect this design limit, the interlock shall actuate to place the LVP HEPA filter preheaters (LVP-CTR-00001A/00003A) in their safe state/open position if the HEPA filter housing temperature reaches 185 °F.

(24590-LAW-M6C-LVP-00012, *Analytical Limit for the Offgas HEPA Preheater High Temperature Interlock*). [Sections 4.4.4.1.8.3, 4.4.4.1.8.4, Appendix A Table A-1, LAW-DSA] (D.2)

Basis Discussion: The interlock reduces the probability of a release of radioactive and chemically hazardous material, by preventing a failure of the offgas confinement boundary or an ignition of carbon bed media caused by high offgas temperatures.

Verification: Verification is expected to be achieved through the following:

Verif. Method	Verif. By	Plan	Notes/Comments
A	**ENG**	Perform an analysis to determine the HEPA preheaters outlet high temperature setpoint (HEPA filter housing temperature reaches 185 °F).	May be documented in assessment/evaluation report.
R	**ENG**	Review design to verify there are interlock instruments and components that: • Monitor temperatures downstream of the HEPA filter pre-heaters and initiate the interlock. • Isolate power to the HEPA filter preheater non-safety heating elements.	
T	**SU/ COM**	Perform a test to verify the interlock; • Monitors temperatures downstream of the HEPA filter pre-heaters and initiates the interlock. • Isolates power to the HEPA filter preheater non-safety heating elements.	

3.9.2.3.1.2 Offgas HEPA Preheaters High Temperature Interlock (Prevent Autoignition Temperatures)

Requirement: Upon detection of high HEPA preheater outlet temperature (LVP-TT-0136/0137), the interlock shall shut the carbon bed inlet valves (LVP-YV-0407/0415/0449) prior to reaching the autoignition temperature of the carbon bed media. The interlock shall close the carbon bed inlet isolation valves (LVP-YV-0407/0415/0449) to prevent the carbon bed inlet temperature from exceeding 338 °F. [Sections 4.4.4.1.8.3, 4.4.4.1.8.4, Appendix A Table A-1, LAW-DSA] (D.2)

Basis Discussion: The interlock reduces the probability of a release of radioactive and chemically hazardous material, by preventing a failure of the offgas confinement boundary or an ignition of carbon bed media caused by high offgas temperatures.

Verification: Verification is expected to be achieved through the following:

Verif. Method	Verif. By	Plan	Notes/Comments
R	**ENG**	Review design to verify there are interlock instruments and components that: • Monitor temperatures downstream of the HEPA filter pre-heaters and initiate the interlock. • Close the mercury mitigation skid inlet valves closure prior to the carbon bed inlet temperature exceeding 338°F.	

Verif. Method	Verif. By	Plan	Notes/Comments
T	**SU/ COM**	Perform a test to verify the interlock; • Monitors temperatures downstream of the HEPA filter pre-heaters and initiates the interlock. • Close the mercury mitigation skid inlet valves closure prior to the carbon bed inlet temperature exceeding 338°F.	

3.9.2.3.1.3 Failed Offgas HEPA Preheaters High Temperature Interlocked Components (failed final control SIS elements)

Requirement: The interlocked components that can fail in a manner that causes a release shall fail to a safe position on loss of control signal or air. The offgas HEPA preheater (LVP-HTR-00001A/00003A) shall be designed to fail in an off position on loss of control signal to the preheater. The PPJ carbon bed adsorber bypass valve (LVP-YV-0403) shall be designed to fail in an open position on loss of control signal or loss of air to the valve. [Sections 4.4.4.1.8.3, 4.4.4.1.8.4, Appendix A Table A-1, LAW-DSA]

Basis Discussion: By preventing the final control elements of the SIS from failing in a manner that would cause a release, the failure position of these components reduces the probability of a release of radioactive and chemically hazardous material.

Verification: Verification is expected to be achieved through the following:

Verif. Method	Verif. By	Plan	Notes/Comments
R	**ENG**	Review the design for incorporation of the failure position on loss of control signal, air, or power to the follow: • Offgas HEPA preheaters - fail in an OFF position • PPJ carbon bed adsorber bypass valve - fails in an OPEN position	
T	**SU/ COM**	Perform a test to verify the failure position on loss (or simulated loss) of control signal, air, or power to the follow: • Offgas HEPA preheaters - fail in an OFF position • Carbon bed adsorber bypass valve - fails in an OPEN position	

3.9.2.3.2 Deleted

3.9.2.3.3 Deleted

3.9.2.3.4 Deleted

3.9.2.4 Mercury Mitigation Skid Interlocks

3.9.2.4.1 Deleted

3.9.2.4.2 Deleted

3.9.2.4.3 Carbon Bed High Differential CO Concentration Interlock

Requirement: Upon detection of high differential CO concentrations (Inlet: LVP-AT-0405/0406; Outlet: LVP-AT-0424/0425) the interlock shall isolate and bypass the carbon beds (final elements listed below). The interlock shall open the carbon bed bypass valve and shut the carbon bed inlet valves when the differential CO concentration of ≥ 454 ppm. The total time to acquire a gas sample and close the inlet valve shall be ≤310 seconds.

- Open the carbon bed bypass valve (LVP-YV-0403)
- Shut the carbon bed inlet valves (LVP-YV-0407/0415/0449).

[Sections 4.4.4.1.11.3, 4.4.4.1.11.4, Appendix A Table A-1, LAW-DSA] (D.2)
Basis Discussion: The interlock and associated support systems mitigate the release of chemically hazardous material in the event of a fire by detecting incipient mercury mitigation skid fire conditions and limiting oxygen flow to the carbon bed, thereby reducing the fire energy and the release rate. The carbon bed inlet valves (LVP-YV-0407, LVP-YV-0415, LVP-YV-0449) cannot initiate closure before the carbon bed adsorber bypass valve has initiated opening (LVP-YV-0403) due to the pneumatic permissive.

Verification: Verification is expected to be achieved through the following:

Verif. Method	Verif. By	Plan	Notes/Comments
A	**ENG**	Perform an analysis to determine the CO level (≥ 454 ppm) that is indicative of a carbon bed fire	May be documented in assessment/evaluation report.
R	**ENG**	Review design to verify there are interlock instruments and components that: • The total time to acquire a gas sample and close the inlet valve is ≤310 seconds • Detect mercury mitigation skid inlet and outlet CO concentrations and initiate the interlock. • Open the carbon-bed bypass valve. • After opening the carbon-bed bypass valve, close the mercury mitigation skid inlet valves.	
T	**SU/ COM**	Perform a test to verify the interlock: • The total time to acquire a gas sample and close the inlet valve is ≤310 seconds • Detects mercury mitigation skid inlet and outlet CO concentrations and initiates the interlock. • Opens the carbon-bed bypass valve. • After opening the carbon-bed bypass valve, closes the mercury mitigation skid inlet valves.	

3.9.2.4.3.1 Failed Carbon Bed High Differential CO Concentration Interlocked Components (failed final control SIS elements)

Requirement: The interlocked components that can fail in a manner that causes a release shall fail to a safe position on loss of control signal or air. The PPJ carbon bed adsorber bypass valve (LVP-YV-0403) shall be designed to fail in an open position on loss of control signal or loss of air to the valve. [Sections 4.4.4.1.11.3, 4.4.4.1.11.4, Appendix A Table A-1, LAW-DSA]

Basis Discussion: By preventing the final control elements of the SIS from failing in a manner that would cause a release, the failure position of these components reduces the probability of a release of radioactive and chemically hazardous material.

Verification: Verification is expected to be achieved through the following:

Verif. Method	Verif. By	Plan	Notes/Comments
R	ENG	Review the design for incorporation of the failure position on loss of control signal or air to the follow: • Carbon bed adsorber bypass valve - fails in an OPEN position	
T	SU/ COM	Perform a test to verify the failure position on loss (or simulated loss) of control signal or air to the follow: • Carbon bed adsorber bypass valve - fails in an OPEN position	

3.9.2.5 Selective Catalytic Oxidizer/Reducer Interlocks

3.9.2.5.1 Deleted

3.9.2.5.2 TCO Heater High Temperature Interlock

Requirement: Upon detection of high heater temperature (LVP-TE-0509/0516, LVP-TT-0509/0516), the interlock shall isolate power to the SCO/SCR skid electric heater (LVP-CTR-00002). The interlock shall isolate power to LVP-HTR-00002 before the offgas system primary pathway confinement boundary temperature reaches 805 °F. [Sections 4.4.4.1.12.3, 4.4.4.1.12.4, Appendix A Table A-1, LAW-DSA] (D.2)

Basis Discussion: The melter offgas system maintains a continuous flow from the melter to the exhaust stack, which ensures that melter offgases are not released to normally occupied areas of the LAW Facility whenever a melter has a cold cap. The analysis relies on this flow to prevent exposure of the facility worker to nitrogen oxide (NO_x) gases, and to direct releases to the exhaust stack to achieve an elevated release and decrease the exposure to the co-located worker to acceptable levels. The catalytic oxidizer/reducer skid heater interlock prevents excessive temperatures that could result in a breach of the melter offgas confinement boundary and a subsequent melter offgas release event. This interlock and associated detection instrumentation detects high heater temperatures and cuts off the heater before excessive temperatures are reached.

Verification: Verification is expected to be achieved through the following:

Verif. Method	Verif. By	Plan	Notes/Comments
A	**ENG**	Perform an analysis to determine the high temperature limit (< 805 °F) to prevent a breach of the melter offgas confinement boundary.	May be documented in assessment/evaluation report.
R	**ENG**	Review design to verify there are interlock instruments and components that: • Monitor the temperature downstream of the catalytic oxidizer/reducer skid heater and initiate the interlock • Cut off the catalytic oxidizer/reducer skid heater.	
T	**SU/ COM**	Perform a test to verify the interlock: • Monitors the temperature downstream of the catalytic oxidizer/reducer skid heater and initiates the interlock. • Cuts off the catalytic oxidizer/reducer skid heater.	

3.9.2.5.2.1 Failed TCO Heater High Temperature Interlocked Components (failed final control SIS elements)

Requirement: The interlocked components that can fail in a manner that causes a release shall fail to a safe position on loss of control signal or air. The thermal catalytic oxidizer heater contactor (LVP-CTR-00002) shall be designed to fail in an off position on loss of control signal to the heater. [Sections 4.4.4.1.12.3, 4.4.4.1.12.4, Appendix A Table A-1, LAW-DSA]

Basis Discussion: By preventing the final control elements of the SIS from failing in a manner that would cause a release, the failure position of these components reduces the probability of a release of radioactive and chemically hazardous material.

Verification: Verification is expected to be achieved through the following:

Verif. Method	Verif. By	Plan	Notes/Comments
R	ENG	Review the design for incorporation of the failure position on loss of control signal, air, or power to the following: • thermal catalytic oxidizer heater - fails in an OFF position.	
T	SU/ COM	Perform a test to verify the failure position on loss (or simulated loss) of control signal, air, or power to the following: • thermal catalytic oxidizer heater - fails in an OFF position.	

3.9.2.5.3 TCO Skid High Temperature Interlock

3.9.2.5.3.1 TCO Skid High Temperature Interlock (Isolate Skid Heater)

Requirement: Upon detection of high TCO skid outlet temperature (LVP-TE-0552/0554, LVP-TT-0552/0554), the interlock shall isolate power to the SCO/SCR skid electric heater (LVP-CTR-00002). The interlock shall

isolate the power to LVP-HTR-00002 before the offgas system primary pathway confinement boundary temperature reaches 428 °F**. [**Sections 4.4.4.1.13.3, 4.4.4.1.13.4, Appendix A Table A-1, LAW-DSA] (D.2)

Basis Discussion: The interlock reduces the probability of a release of radioactive and chemically hazardous material by preventing a failure of the offgas confinement boundary caused by high offgas temperatures.

Verification: Verification is expected to be achieved through the following:

Verif. Method	Verif. By	Plan	Notes/Comments
A	**ENG**	Perform an analysis to determine the high outlet temperature limit (< 428 °F) to prevent a breach of the melter offgas confinement boundary.	May be documented in assessment/evaluation report.
R	**ENG**	Review design to verify there are interlock instruments and components that: • Monitor the TCO skid outlet temperature and initiate the interlock. • Isolate the power to the TCO skid heater.	
T	**SU/ COM**	Perform a test to verify the interlock: • Monitors the TCO skid outlet temperature and initiates the interlock. • Isolates the power to the TCO skid heater.	

3.9.2.5.3.2 TCO Skid High Temperature Interlock (Isolate Ammonia Supply)

Requirement: Upon detection of high TCO skid outlet temperature (LVP-TE-0552/0554, LVP-TT-0552/0554), the interlock shall isolate ammonia supply to the SCO/SCR by closing the following valves: SCO/SCR ammonia supply (LVP-YV-0528/0560). The interlock shall isolate SCO/SCR ammonia supply (LVP-YV-0528/0560) before the offgas system primary pathway confinement boundary temperature reaches 428 °F. [Sections 4.4.4.1.13.3, 4.4.4.1.13.4, Appendix A Table A-1, LAW-DSA] (D.2)

Basis Discussion: The interlock reduces the probability of a release of radioactive and chemically hazardous material by preventing a failure of the offgas confinement boundary caused by high offgas temperatures.

Verification: Verification is expected to be achieved through the following:

Verif. Method	Verif. By	Plan	Notes/Comments
A	**ENG**	Perform an analysis to determine the high outlet temperature limit (< 428 °F) to prevent a breach of the melter offgas confinement boundary.	May be documented in assessment/evaluation report.
R	**ENG**	Review design to verify there are interlock instruments and components that: • Monitor the TCO skid outlet temperature and initiate the interlock. • Stop ammonia addition into the ammonia/air dilution skid.	
T	**SU/ COM**	Perform a test to verify the interlock: • Monitors the TCO skid outlet temperature and initiates the interlock. • Stops ammonia addition into the ammonia/air dilution skid.	

3.9.2.5.3.3 Failed TCO Skid High Temperature Interlocked Components (failed final control SIS elements)

Requirement: The interlocked components that can fail in a manner that causes a release shall fail to a safe position on loss of control signal or air. The PPJ ammonia dilution ammonia supply valve (LVP-YV-0528/0560) shall be designed to fail in a closed position on loss of control signal or loss of air to the valve. The thermal catalytic oxidizer heater contactor (LVP-CTR-00002) shall be designed to fail in an off position on loss of control signal to the heater. [Sections 4.4.4.1.13.3, 4.4.4.1.13.4, Appendix A Table A-1, LAW-DSA]

Basis Discussion: By preventing the final control elements of the SIS from failing in a manner that would cause a release, the failure position of these components reduces the probability of a release of radioactive and chemically hazardous material.

Verification: Verification is expected to be achieved through the following:

Verif. Method	Verif. By	Plan	Notes/Comments
R	**ENG**	Review the design for incorporation of the failure position on loss of control signal or air to the following: • Ammonia dilution ammonia supply valves - fail in a CLOSED position • Thermal catalytic oxidizer heater - fails in an OFF position	
T	**SU/ COM**	Perform a test to verify the failure position on loss (or simulated loss) of control signal or air to the following: • Ammonia dilution ammonia supply valves - fail in a CLOSED position • Thermal catalytic oxidizer heater - fails in an OFF position	

3.9.2.5.4 Deleted

3.9.2.5.5 Ammonia High Flow Interlock

Requirement: Upon detection of high ammonia supply flow (LVP-FT-0530/0531, LVP-FE-0530/0531), the interlock shall terminate the ammonia supply to the SCO/SCR (LVP-YV-0528/0560). The interlock shall terminate the ammonia supply when the ammonia flow rate is greater than or equal to 47 scfm. [Sections 4.4.4.1.15.3, 4.4.4.1.15.4, Appendix A Table A-1, LAW-DSA] (D.2)

Basis Discussion: The interlock mitigates the release of ammonia caused by the ignition of an ignitable concentration of ammonia caused by excessive ammonia supply flow.

Verification: Verification is expected to be achieved through the following:

Verif. Method	Verif. By	Plan	Notes/Comments
A	**ENG**	Perform an analysis to determine the maximum allowable flow rate (≥ 47 scfm) for the ammonia supply.	May be documented in assessment/evaluation report.
R	**ENG**	Review design to verify there are interlock instruments and components that: • Monitor the ammonia supply flow and initiate the interlock. • Isolate the ammonia supply by closing valve LVP-YV-0528/-560.	
T	**SU/ COM**	Perform a test to verify the interlock: • Monitors the ammonia supply flow and initiates the interlock. • Isolates the ammonia supply by closing valve LVP-YV-0528/-560.	

3.9.2.5.5.1 Failed Ammonia High Flow Interlocked Components (failed final control SIS elements)

Requirement: The interlocked components that can fail in a manner that causes a release shall fail to a safe position on loss of control signal or air. The PPJ ammonia dilution ammonia supply valve (LVP-YV-0528/0560) is designed to fail in a closed position on loss of control signal or loss of air to the valve. [Sections 4.4.4.1.15.3, 4.4.4.1.15.4, Appendix A Table A-1, LAW-DSA]

Basis Discussion: By preventing the final control elements of the SIS from failing in a manner that would cause a release, the failure position of these components reduces the probability of a release of radioactive and chemically hazardous material.

Verification: Verification is expected to be achieved through the following:

Verif. Method	Verif. By	Plan	Notes/Comments
R	**ENG**	Review the design for incorporation of the failure position on loss of control signal or air to the following: • Ammonia dilution ammonia supply valves - fail in a CLOSED position	
T	**SU/ COM**	Perform a test to verify the failure position on loss (or simulated loss) of control signal or air to the following: • Ammonia dilution ammonia supply valves - fail in a CLOSED position	

3.9.2.5.6 Ammonia Dilution Air Flow Interlock

Requirement: Upon detection of loss of dilution air flow (LVP-FT-0540/0541, LVP-FE-0540/0541) the interlock shall terminate ammonia supply to the SCO/SCR (LVP-YV-0528/0560). The interlock shall terminate the ammonia supply when the dilution air flow is lost (i.e., less than or equal to 369 scfm). The ammonia supply valves (LVP-YV-0528/0560) shall close in sufficient time to prevent reaching LFL in Room L-0322A and prevent exceeding PAC-2 concentration to CLW. [Sections 4.4.4.1.16.3, 4.4.4.1.16.4, Appendix A Table A-1, LAW-DSA] (D.2)

Basis Discussion: The interlock mitigates the release of ammonia caused by the ignition of an ignitable concentration of ammonia resulting from inadequate air supply flow.

Verification: Verification is expected to be achieved through the following:

Verif. Method	Verif. By	Plan	Notes/Comments
A	**ENG**	Perform an analysis to determine the setpoint for the minimum allowable dilution-air flow rate (≤ 369 scfm) to prevent back flow.	May be documented in assessment/evaluation report.
A	**ENG**	Perform an analysis to determine the maximum closure time of valves LVP-YV-0528/-0560 to prevent reaching LFL in Room L-0322A and prevent exceeding PAC-2 concentration to CLW.	
R	**ENG**	Review design to verify there are interlock instruments and components that: • Monitor the ammonia dilution air flow and initiate the interlock. • Isolate the ammonia supply by closing valve LVP-YV-0528/-0560 and within the closure time determined by the analysis.	
T	**SU/ COM**	Perform a test to verify the interlock: • Monitors the ammonia dilution air flow and initiates the interlock. • Isolates the ammonia supply by closing valve LVP-YV-0528/-0560 and within the closure time determined by the analysis.	

3.9.2.5.6.1 Failed Ammonia Dilution Air Low Flow Interlocked Components (failed final control SIS elements)

Requirement: The interlocked components that can fail in a manner that causes a release shall fail to a safe position on loss of control signal or air. The PPJ ammonia dilution ammonia supply valve (LVP-YV-0528/0560) is designed to fail in a closed position on loss of control signal or loss of air to the valve. [Sections 4.4.4.1.16.3, 4.4.4.1.16.4, Appendix A Table A-1, LAW-DSA]

Basis Discussion: By preventing the final control elements of the SIS from failing in a manner that would cause a release, the failure position of these components reduces the probability of a release of radioactive and chemically hazardous material.

Verification: Verification is expected to be achieved through the following:

Verif. Method	Verif. By	Plan	Notes/Comments
R	ENG	Review the design for incorporation of the failure position on loss of control signal or air to the following: • Ammonia dilution ammonia supply valves - fail in a CLOSED position	
T	SU/ COM	Perform a test to verify the failure position on loss (or simulated loss) of control signal or air to the following: • Ammonia dilution ammonia supply valves - fail in a CLOSED position	

3.9.2.5.7 Deleted

3.9.2.6 Caustic Scrubber Interlocks

3.9.2.6.1 Deleted

3.9.2.6.2 Caustic Scrubber Recirculation Low Pressure Interlock

Requirement: The interlock shall initiate when caustic scrubber recirculation pressure is less than or equal to 6.8 psig. Upon detection of low caustic scrubber recirculation pressure (LVP-PT-0220), the interlock shall:

- Close caustic scrubber scrub inlet valve (LVP-YV-0219)
- Open TCO skid bypass valve (LVP-YV-0501)
- Isolate power to the TCO heater control (LVP-CTR-00002)
- Close ammonia dilution ammonia supply valves (LVP-YV-0528/0560)
- Close ammonia dilution air supply valve (LVP-YV-0538)

[Sections 4.4.4.1.17.3, 4.4.4.1.17.4, Appendix A Table A-1, LAW-DSA] (D.2)

Basis Discussion: The interlock reduces the probability of a release of radioactive and chemically hazardous material, due to a loss of melter vacuum, by preventing excessive air in-leakage into the offgas system from a failed recirculation line.

Verification: Verification is expected to be achieved through the following:

Verif. Method	Verif. By	Plan	Notes/Comments
A	**ENG**	Perform an analysis to determine caustic scrubber recirculation low pressure (≤ 6.8 psig).	May be documented in assessment/evaluation report.
R	**ENG**	Review design to verify there are interlock instruments and components that: • Monitor the caustic scrubber recirculation pressure and initiate the interlock. • Close the caustic scrubber recirculation line isolation valve. • Bypass the TCO skid. • Isolate power to the TCO skid heater. • Stop ammonia and air supply into the ammonia/air dilution skid.	
T	**SU/ COM**	Perform a test to verify the interlock: • Monitors the caustic scrubber recirculation pressure and initiates the interlock. • Closes the caustic scrubber recirculation line isolation valve. • Bypasses the TCO skid. • Isolates power to the TCO skid heater. • Stops ammonia and air supply into the ammonia/air dilution skid.	

3.9.2.6.2.1 Failed Caustic Scrubber Recirculation Low Pressure Interlocked Components (failed final control SIS elements)

Requirement: The interlocked components that can fail in a manner that causes a release shall fail to a safe position on loss of control signal or air. The thermal catalytic oxidizer skid bypass valve (LVP-YV-0501) shall be designed to fail in an open position on loss of control signal or loss of air to the valve. The PPJ ammonia dilution air supply valve (LVP-YV-0538) shall be designed to fail in a closed position on loss of control signal or loss of air to the valve. The PPJ ammonia dilution ammonia supply valve (LVP-YV-0528/0560) shall be designed to fail in a closed position on loss of control signal or loss of air to the valve. The thermal catalytic oxidizer heater contactor (LVP-CTR-00002) shall be designed to fail in an off position on loss of control signal to the heater. The caustic scrubber scrub inlet valve (LVP-YV-0219) shall be designed to fail in a closed position on loss of control signal or loss of air to the valve. [Sections 4.4.4.1.17.3, 4.4.4.1.17.4, Appendix A Table A-1, LAW-DSA]

Basis Discussion: By preventing the final control elements of the SIS from failing in a manner that would cause a release, the failure position of these components reduces the probability of a release of radioactive and chemically hazardous material.

Verification: Verification is expected to be achieved through the following:

Verif. Method	Verif. By	Plan	Notes/Comments
R	**ENG**	Review the design for incorporation of the failure position on loss of control signal or air to the following: • Thermal catalytic oxidizer skid bypass valve - fails in an OPEN position • PPJ ammonia dilution air supply valve - fails in a CLOSED position • PPJ ammonia dilution ammonia supply valves - fail in a CLOSED position • Thermal catalytic oxidizer heater - fails in an OFF position Caustic scrubber scrub inlet valve - fails in a CLOSED position	
T	**SU/ COM**	Perform a test to verify the failure position on loss (or simulated loss) of control signal or air to the following: • Thermal catalytic oxidizer skid bypass valve - fails in an OPEN position • PPJ ammonia dilution air supply valve - fails in a CLOSED position • PPJ ammonia dilution ammonia supply valves - fail in a CLOSED position • Thermal catalytic oxidizer heater - fails in an OFF position • Caustic scrubber scrub inlet valve - fails in a CLOSED position	

3.9.2.6.3 Caustic Scrubber Recirculation Low Flow Interlock

Requirement: The interlock shall initiate when caustic scrubber recirculation flow is less than or equal to 160 gpm. Upon detection of low caustic scrubber recirculation flow (LVP-FE-0221, LVP-FT-0221), the interlock shall perform the following:

- Open the SCO/SCR bypass valve (LVP-YV-0501)
- Isolate power to the SCO/SCR heater control (LVP-CTR-00002)
- Close the SCO/SCR ammonia supply valves (LVP-YV-0528/0560)
- Close the SCO/SCR dilution air supply valve (LVP-YV-0538)

[Sections 4.4.4.1.18.3, 4.4.4.1.18.4, Appendix A Table A-1, LAW-DSA] (D.2)

Basis Discussion: The interlock reduces the probability of a release of radioactive and chemically hazardous material by preventing a failure of the exhausters from caustic scrubber outlet high temperatures.

Verification: Verification is expected to be achieved through the following:

Verif. Method	Verif. By	Plan	Notes/Comments
A	**ENG**	Perform an analysis to determine the minimum flow rate (≤ 160 gpm) required for the caustic scrubber recirculation line.	May be documented in assessment/evaluation report.
R	**ENG**	Review design to verify there are interlock instruments and components that: • Monitor the Caustic scrubber caustic scrubber recirculation line flow and initiate the interlock. • Bypass the TCO skid. • Isolate power to the TCO skid heater. • Stop ammonia and air supply into the ammonia/air dilution skid.	
T	**SU/ COM**	Perform a test to verify the interlock: • Monitors the Caustic scrubber caustic scrubber recirculation line flow and initiates the interlock. • Bypasses the TCO skid. • Isolates power to the TCO skid heater. • Stops ammonia and air supply into the ammonia/air dilution skid.	

3.9.2.6.3.1 Failed Caustic Scrubber Recirculation Low Flow Interlocked Components (failed final control SIS elements)

Requirement: The interlocked components that can fail in a manner that causes a release shall fail to a safe position on loss of control signal or air. The thermal catalytic oxidizer skid bypass valve (LVP-YV-0501) shall be designed to fail in an open position on loss of control signal or loss of air to the valve. The PPJ ammonia dilution air supply valve (LVP-YV-0538) shall be designed to fail in a closed position on loss of control signal or loss of air to the valve. The PPJ ammonia dilution ammonia supply valve (LVP-YV-0528/0560) shall be designed to fail in a closed position on loss of control signal or loss of air to the valve. The thermal catalytic oxidizer heater contactor (LVP-CTR-00002) shall be designed to fail in an off position on loss of control signal to the heater. [Sections 4.4.4.1.18.3, 4.4.4.1.18.4, Appendix A Table A-1, LAW-DSA]

Basis Discussion: By preventing the final control elements of the SIS from failing in a manner that would cause a release, the failure position of these components reduces the probability of a release of radioactive and chemically hazardous material.

Verification: Verification is expected to be achieved through the following:

Verif. Method	Verif. By	Plan	Notes/Comments
R	ENG	Review the design for incorporation of the failure position on loss of control signal or air to the following: • Thermal catalytic oxidizer skid bypass valve - fails in an OPEN position • PPJ ammonia dilution air supply valve - fails in a CLOSED position • PPJ ammonia dilution ammonia supply valves - fail in a CLOSED position • Thermal catalytic oxidizer heater - fails in an OFF position	
T	SU/ COM	Perform a test to verify the failure position on loss (or simulated loss) of control signal or air to the following: • Thermal catalytic oxidizer skid bypass valve - fails in an OPEN position • PPJ ammonia dilution air supply valve - fails in a CLOSED position • PPJ ammonia dilution ammonia supply valves - fail in a CLOSED position • Thermal catalytic oxidizer heater - fails in an OFF position	

3.9.2.6.4 Deleted

3.9.2.6.5 Deleted

3.9.2.6.6 Caustic Scrubber Process Water Supply Low Pressure Interlock

Requirement: The interlock shall isolate water supply when the process water supply pressure is less than or equal to 53.2 psig. Upon detection of low process water supply pressure (LVP-PT-0216), the interlock shall isolate the supply (LVP-YV-0201). [Sections 4.4.4.1.19.3, 4.4.4.1.19.4, Appendix A Table A-1, LAW-DSA] (D.2)

Basis Discussion: The interlock reduces the probability of a release of radioactive and chemically hazardous material by preventing a loss of LVP header vacuum due to excessive air in-leakage from a failed process water line in the caustic scrubber system.

Verification: Verification is expected to be achieved through the following:

Verif. Method	Verif. By	Plan	Notes/Comments
A	**ENG**	Perform an analysis to determine the caustic scrubber low water supply pressure (≤ 53.2 psig).	May be documented in assessment/evaluation report.
R	**ENG**	Review design to verify there are interlock instruments and components that: • Monitor the process water line pressure and initiate the interlock • Close the caustic scrubber process water line isolation valve.	
T	**SU/ COM**	Perform a test to verify the interlock: • Monitors the process water line pressure and initiates the interlock • Closes the caustic scrubber process water line isolation valve.	

3.9.2.6.6.1 Failed Caustic Scrubber Process Water Supply Low Pressure Interlocked Components (failed final control SIS elements)

Requirement: The interlocked components that can fail in a manner that causes a release shall fail to a safe position on loss of control signal or air. The PPJ caustic scrubber process service water supply valve (LVP-YV-0201) shall be designed to fail in a closed position on loss of control signal or loss of air to the valve. [Sections 4.4.4.1.19.3, 4.4.4.1.19.4, Appendix A Table A-1, LAW-DSA]

Basis Discussion: By preventing the final control elements of the SIS from failing in a manner that would cause a release, the failure position of these components reduces the probability of a release of radioactive and chemically hazardous material.

Verification: Verification is expected to be achieved through the following:

Verif. Method	Verif. By	Plan	Notes/Comments
R	**ENG**	Review the design for incorporation of the failure position on loss of control signal or air to the following: • Caustic scrubber process service water supply valve - fails in a CLOSED position	
T	**SU/ COM**	Perform a test to verify the failure position on loss (or simulated loss) of control signal or air to the following: • Caustic scrubber process service water supply valve - fails in a CLOSED position	

3.9.2.7 LVP Header Interlocks

3.9.2.7.1 Offgas Header High and Low Pressure Interlock

3.9.2.7.1.1 Offgas Header High and Low Pressure Interlock (Terminate Sources of Pressure)

Requirement: Upon detection of high or low offgas header pressure (LVP-PT-0139/0140), the interlock shall limit MAR and terminate sources of pressurization to both melters by closing the ADS air and water supply valves and the film cooler water valves (final elements listed below). The interlock shall terminate sources of melter pressurization if the header pressure is greater than or equal to −56.5 in. WG or exceeds −139.5 in. WG.

- Close ADS air supply valves (Melter 1 - LFP-YV-1208/1212, Melter 2 - LFP-YV-2208/2212)
- Close ADS water supply valves (Melter 1 - LFP-YV-1207/1211, Melter 2 - LFP-YV-2207/2211)
- Close film cooler water valves (Melter 1 - LOP-YV-1109/1405, Melter 2 - LFP-YV-2109/2405)

[Sections 4.4.4.1.9.3, 4.4.4.1.9.4, 4.4.4.1.10.3, 4.4.4.1.10.4, Appendix A Table A-1, LAW-DSA] (D.2)

Basis Discussion: The interlock limits the release of radioactive and chemically hazardous material by reducing sources of offgas and reconfiguring the offgas system to maintain melter plenum vacuum in the event of high or low pressure in the LVP header. Note that the term “exceed” should be interpreted as to reach a value more negative (pressure) than the given value.

Verification: Verification is expected to be achieved through the following:

Verif. Method	Verif. By	Plan	Notes/Comments
A	**ENG**	Perform an analysis to determine the LVP header high and low pressure interlock setpoints at ≥ -56.5 in. W.G. or ≤ -139.5 in. W.G., respectively	May be documented in assessment/evaluation report.
R	**ENG**	Review design to verify there are interlock instruments and components that: • Monitors the LVP header pressure and initiates the interlock • Stop air to the ADS pumps for both melters • Stop ADS flush water to both melters • Isolate film cooler wash supply	
T	**SU/ COM**	Perform a test to verify the interlock: • Monitors the LVP header pressure and initiates the interlock. • Stops air to the ADS pumps for both melters. • Stops ADS flush water to both melters. • Isolate film cooler wash supply	

3.9.2.7.1.2 Offgas Header High and Low Pressure Interlock (Reduce Pressuized Air Sources)

Requirement: Upon detection of high offgas header pressure (LVP-PT-0139/0140), the interlock shall reduce pressurized air sources to both primary offgas systems and support offgas system flow by closing the film cooler air valves and WESP air valves and opening the primary and standby offgas film cooler air inbleed valves (final elements listed below). The interlock shall terminate film cooler air and WESP air if the header pressure is greater than or equal to −56.5 in. WG or exceeds -139.5 in. WG. The interlock shall open melter primary and standby offgas film cooler air inbleed valves no sooner than 78.5 seconds after detection of the high- or low-pressure condition (to allow vacuum to be re-established in melter if lost).

- Close film cooler air valves (Melter 1 - LOP-YV-1129/1404, Melter 2 - LOP-YV-2129/2404)
- Close WESP air valves (Melter 1 - LOP-YV-1098/1161, Melter 2 - LOP-YV-2098/2161)
- Open melter primary offgas film cooler air inbleed valves (Melter 1 - LOP-YV-1401/1407, Melter 2 - LOP-YV-2401/2407))
- Open melter standby offgas film cooler air inbleed valves (Melter 1 - LOP-YV-1402/1406, Melter 2 - LOP-YV-2402/2406)

[Sections 4.4.4.1.9.3, 4.4.4.1.9.4, 4.4.4.1.10.3, 4.4.4.1.10.4, Appendix A Table A-1, LAW-DSA] (D.2)

Basis Discussion: The interlock limits the release of radioactive and chemically hazardous material by reducing sources of offgas and reconfiguring the offgas system to maintain melter plenum vacuum in the event of high or low pressure in the LVP header. Note that the term "exceed" should be interpreted as to reach a value more negative (pressure) than the given value.

Verification: Verification is expected to be achieved through the following:

Verif. Method	Verif. By	Plan	Notes/Comments
A	**ENG**	Perform an analysis to determine the LVP header high and low pressure interlock setpoints at ≥ -56.5 in. W.G. or ≤ -139.5 in. W.G., respectively	May be documented in assessment/evaluation report.
R	**ENG**	Review design to verify there are interlock instruments and components that: • Monitors the LVP header pressure and initiates the interlock • Close WESP Purge Air Valves • Close Film Cooler Air Supply Valves • Open Primary and Standby Film Cooler Emergency Air Inbleed Valves	inbleed valves open no sooner than 78.5 seconds after detection of the high- or low-pressure condition
T	**SU/ COM**	Perform a test to verify the interlock: • Monitors the LVP header pressure and initiates the interlock. • Close WESP Purge Air Valves • Close Film Cooler Air Supply Valves • Open Primary and Standby Film Cooler Emergency Air Inbleed Valves	inbleed valves open no sooner than 78.5 seconds after detection of the high- or low-pressure condition

3.9.2.7.1.3 Offgas Header High and Low Pressure Interlock (Exhauster Suction Load)

Requirement: Upon detection of high or low offgas header pressure (LVP-PT-0139/0140), the interlock shall reduce exhauster suction load by opening the standby offgas line valve, WESP outlet valve, carbon bed bypass valve, TCO bypass valve and caustic scrubber bypass valve and closing the vessel vent isolation valve (final elements listed below). The interlock shall reduce suction loads if the header pressure is greater than or equal to −56.5 in. WG or exceeds −139.5 in. WG.

- Open standby offgas line valve (LOP-YV-1008/2008)
- Open WESP outlet valve (LOP-FV-1140/2140)
- Close vessel vent isolation valve (LVP-PV-0072)
- Open carbon bed bypass valve (LVP-YV-0403)
- Open SCO/SCR bypass valve (LVP-YV-0501)

- Open caustic scrubber bypass valve (LVP-YV-0097)

[Sections 4.4.4.1.9.3, 4.4.4.1.9.4, 4.4.4.1.10.3, 4.4.4.1.10.4, Appendix A Table A-1, LAW-DSA] (D.2)

Basis Discussion: The interlock limits the release of radioactive and chemically hazardous material by reducing sources of offgas and reconfiguring the offgas system to maintain melter plenum vacuum in the event of high or low pressure in the LVP header. Note that the term "exceed" should be interpreted as to reach a value more negative (pressure) than the given value.

Verification: Verification is expected to be achieved through the following:

Verif. Method	Verif. By	Plan	Notes/Comments
A	**ENG**	Perform an analysis to determine the LVP header high and low pressure interlock setpoints at ≥ -56.5 in. W.G. or ≤ -139.5 in. W.G., respectively	May be documented in assessment/evaluation report.
R	**ENG**	Review design to verify there are interlock instruments and components that: • Monitors the LVP header pressure and initiates the interlock • Open Standby Film Cooler Isolation Valve • Open Offgas Flow Control Valve • Open Caustic Scrubber Bypass Valve • Open TCO Skid Bypass Valve • Open Carbon Bed Adsorber Bypass Valve • Close Vessel Vent Header Pressure Control Valve	
T	**SU/ COM**	Perform a test to verify the interlock: • Monitors the LVP header pressure and initiates the interlock. • Open Standby Film Cooler Isolation Valve • Open Offgas Flow Control Valve • Open Caustic Scrubber Bypass Valve • Open TCO Skid Bypass Valve • Open Carbon Bed Adsorber Bypass Valve • Close Vessel Vent Header Pressure Control Valve	

3.9.2.7.1.4 Offgas Header High and Low Pressure Interlock (Reduce Sources of Heat and Air in Secondary Offgas)

Requirement: Upon detection of high offgas header pressure (LVP-PT-0139/0140), the interlock shall reduce sources of heat and air in the secondary offgas system by closing the ammonia dilution air supply valve and ammonia dilution ammonia supply valve and turning off the TCO heater (final elements listed below). Initiate interlock to reduce sources of heat load and air in the secondary offgas system if the header pressure is greater than or equal to −56.5 in. WG or exceeds -139.5 in. WG.

- Close SCO/SCR dilution air supply valve (LVP-YV-0538)
- Close ammonia supply valve (LVP-YV-0528/0560)
- Turn off SCO/SCR heater control contactor (LVP-CTR-00002)

[Sections 4.4.4.1.9.3, 4.4.4.1.9.4, 4.4.4.1.10.3, 4.4.4.1.10.4, Appendix A Table A-1, LAW-DSA] (D.2)

Basis Discussion: The interlock limits the release of radioactive and chemically hazardous material by reducing sources of offgas and reconfiguring the offgas system to maintain melter plenum vacuum in the event of high or low pressure in the LVP header. Note that the term "exceed" should be interpreted as to reach a value more negative (pressure) than the given value.

Verification: Verification is expected to be achieved through the following:

Verif. Method	Verif. By	Plan	Notes/Comments
A	**ENG**	Perform an analysis to determine the LVP header high and low pressure interlock setpoints at ≥ -56.5 in. W.G. or ≤ -139.5 in. W.G., respectively	May be documented in assessment/evaluation report.
R	**ENG**	Review design to verify there are interlock instruments and components that: • Monitors the LVP header pressure and initiates the interlock • Isolate power to the TCO skid heater. • Close Ammonia Dilution Ammonia Supply Valve • Close Ammonia Dilution Air Supply Valve	
T	**SU/ COM**	Perform a test to verify the interlock: • Monitors the LVP header pressure and initiates the interlock. • Isolate power to the TCO skid heater. • Close Ammonia Dilution Ammonia Supply Valve • Close Ammonia Dilution Air Supply Valve	

3.9.2.7.1.5 Offgas Header High and Low Pressure Interlock (Reduce Offgas Load)

Requirement: Upon detection of high offgas header pressure (LVP-PT-0139/0140), the interlock shall restrict the exhausters to a speed compatible with the reduced offgas load by setting exhausters to fixed speed and opening the vacuum breaker line valves (final elements listed below). The interlock shall set the exhausters to fixed speed and open vacuum breaker line valves if the header pressure is greater than or equal to −56.5 in. WG or exceeds −139.5 in. WG.

- Set exhauster to fixed 2020 RPM speed (LVP-EXHR-00001A [LVP-YC-0023B], LVP-EXHR-00001B [LVP-YC-0020B], and LVP-EXHR-00001C [LVP-YC-0017B])
- Open vacuum breaker line valves (LVP-YV-0453/0454)

[Sections 4.4.4.1.9.3, 4.4.4.1.9.4, 4.4.4.1.10.3, 4.4.4.1.10.4, Appendix A Table A-1, LAW-DSA] (D.2)

Basis Discussion: The interlock limits the release of radioactive and chemically hazardous material by reducing sources of offgas and reconfiguring the offgas system to maintain melter plenum vacuum in the event of high or low pressure in the LVP header. Note that the term "exceed" should be interpreted as to reach a value more negative (pressure) than the given value.

Verification: Verification is expected to be achieved through the following:

Verif. Method	Verif. By	Plan	Notes/Comments
A	**ENG**	Perform an analysis to determine the LVP header high and low pressure interlock setpoints at ≥ -56.5 in. W.G. or ≤ -139.5 in. W.G., respectively	May be documented in assessment/evaluation report.
R	**ENG**	Review design to verify there are interlock instruments and components that: • Monitors the LVP header pressure and initiates the interlock • Set offgas exhausters to fixed speed • Open the isolation valve to the bypass vacuum breaker.	
T	**SU/ COM**	Perform a test to verify the interlock: • Monitors the LVP header pressure and initiates the interlock. • Set offgas exhausters to fixed speed • Open the isolation valve to the bypass vacuum breaker.	

3.9.2.7.1.6 Failed Offgas Header High and Low Pressure Interlocked Components (failed final control SIS elements)

Requirement: The interlocked components that can fail in a manner that causes a release shall fail to a safe position on loss of control signal or air. The PPJ melter film cooler air supply valve (LOP-YV-1129/1404, LOP-YV-2129/2404) shall be designed to fail in a closed position on loss of control signal or loss of air to the valve. The PPJ melter film cooler water supply valve (LOP-YV-1109/1405, LOP-YV-2109/2405) shall be designed to fail in a closed position on loss of control signal or loss of air to the valve. The PPJ WESP purge air valve (LOP-YV-1098/1161, LOP-YV-2098/2161) shall be designed to fail in a closed position on loss of control signal or loss of air to the valve. The PPJ melter standby film cooler isolation valve (LOP-YV-1008 or LOP-YV-2008) shall be designed to fail in an open position on loss of control signal or loss of air to the valve. The PPJ melter 1 and 2 primary film cooler emergency air inbleed valve (LOP-YV-1401/1407, LOP-YV-2401/2407) shall be designed to fail in an open position on loss of control signal or loss of air to the valve. The PPJ melter standby film cooler emergency air inbleed valve (LOP-YV-1402/1406, LOP-YV-2402/2406) shall be designed to fail in an open position on loss of control signal or loss of air to the valve. The PPJ melter offgas flow control valve (LOP-FV-1140 or LOP-FV-2140) shall be designed to fail in an open position on loss of control signal or loss of air to the valve. The PPJ carbon bed adsorber bypass valve (LVP-YV-0403) shall be designed to fail in an open position on loss of control signal or loss of air to the valve. The thermal catalytic oxidizer skid bypass valve (LVP-YV-0501) shall be designed to fail in an open position on loss of control signal or loss of air to the valve. The PPJ ammonia dilution air supply valve (LVP-YV-0538) shall be designed to fail in a closed position on loss of control signal or loss of air to the valve. The PPJ ammonia dilution ammonia supply valve (LVP-YV-0528/0560) shall be designed to fail in a closed position on loss of control signal or loss of air to the valve. The thermal catalytic oxidizer heater contactor (LVP-CTR-00002) shall be designed to fail in an off position on loss of control signal to the heater. The caustic scrubber bypass valve (LVP-YV-0097) shall be designed to fail in an open position on loss of control signal or loss of air to the valve. The vacuum breaker line valve (LVP-YV-0453/0454) shall be designed to fail in an open position on loss of control signal or loss of air to the valve. The offgas exhauster adjustable speed drive (LVP-ASD-00001A, B, C) shall be designed to fail in a minimum fixed speed position, that will maintain the melter 1 and 2 plenums under vacuum, on loss of control signal to the drive. [Sections 4.4.4.1.9.3, 4.4.4.1.9.4, 4.4.4.1.10.3, 4.4.4.1.10.4, Appendix A Table A-1, LAW-DSA]

Basis Discussion: By preventing the final control elements of the SIS from failing in a manner that would cause a release, the failure position of these components reduces the probability of a release of radioactive and chemically hazardous material.

Verification: Verification is expected to be achieved through the following:

Verif. Method	Verif. By	Plan	Notes/Comments
R	**ENG**	Review the design for incorporation of the failure position on loss of control signal, air, or power: • Offgas exhauster adjustable speed drive - fail in a minimum FIXED speed position • Melter 1 and 2 Feed Pump Plant Air Supply Valves – fail in a CLOSED position • Melter 1 and 2 Feed Pump Demineralized Water Supply Valves – fail in a CLOSED position • Melter 1 and 2 WESP Purge Air Valves – fail in a CLOSED position • Melter 1 and 2 Film Cooler Wash Supply Valves – fail in a CLOSED position • Melter 1 and 2 Film Cooler Air Supply Valves – fail in a CLOSED position • Melter 1 and 2 Primary Film Cooler Emergency Air Inbleed Valves – fail in an OPEN position • Melter 1 and 2 Standby Film Cooler Emergency Air Inbleed Valves – fail in an OPEN position • Melter 1 and 2 Standby Film Cooler Isolation Valves – fail in an OPEN position • Melter 1 and 2 Offgas Flow Control Valves – fail in an OPEN position • Ammonia Dilution Ammonia Supply Valves – fail in a CLOSED position • Ammonia Dilution Air Supply Valve – fails in a CLOSED position • Caustic Scrubber Bypass Valve – fails in an OPEN position • TCO Skid Bypass Valve – fails in an OPEN position • Carbon Bed Adsorber Bypass Valve – fails in an OPEN position • Electrical TCO Heater contactor – fails in an OPEN position. • Vessel Vent Header Pressure Control Valve – fails in a CLOSED position • LVP Bypass Vacuum Breaker Isolation Valves – fail in an OPEN position	
T	**SU/ COM**	Perform a test to verify the failure position on loss (or simulated loss) of control signal, air, or power: • Offgas exhauster adjustable speed drive - fail in a minimum FIXED speed position • Melter 1 and 2 Feed Pump Plant Air Supply Valves – fail in a CLOSED position • Melter 1 and 2 Feed Pump Demineralized Water Supply Valves – fail in a CLOSED position	

		• Melter 1 and 2 WESP Purge Air Valves – fail in a CLOSED position • Melter 1 and 2 Film Cooler Wash Supply Valves – fail in a CLOSED position • Melter 1 and 2 Film Cooler Air Supply Valves – fail in a CLOSED position • Melter 1 and 2 Primary Film Cooler Emergency Air Inbleed Valves – fail in an OPEN position • Melter 1 and 2 Standby Film Cooler Emergency Air Inbleed Valves – fail in an OPEN position • Melter 1 and 2 Standby Film Cooler Isolation Valves – fail in an OPEN position • Melter 1 and 2 Offgas Flow Control Valves – fail in an OPEN position • Ammonia Dilution Ammonia Supply Valves – fail in a CLOSED position • Ammonia Dilution Air Supply Valve – fails in a CLOSED position • Caustic Scrubber Bypass Valve – fails in an OPEN position • TCO Skid Bypass Valve – fails in an OPEN position • Carbon Bed Adsorber Bypass Valve – fails in an OPEN position • Electrical TCO Heater contactor – fails in an OPEN position. • Vessel Vent Header Pressure Control Valve – fails in a CLOSED position • LVP Bypass Vacuum Breaker Isolation Valves – fail in an OPEN position	

3.9.2.7.2 Deleted

3.9.2.8 Exhauster Interlocks

3.9.2.8.1 Offgas Exhauster Shaft Seal Air Supply Low Pressure Interlock

3.9.2.8.1.1 Offgas Exhauster Shaft Seal Air Supply Low Pressure Interlock (Exhauster Shaft Seal Purge)

Requirement: Upon detection of low shaft seal air supply pressure (LVP-PT-0156/0160/0164), the interlock shall isolate normal shaft seal purge air supply to the affected exhauster (LVP-YV-0157/0161/0165). The interlock shall isolate normal shaft seal purge air supply to the affected exhauster and feed to both melters if one of the exhauster shaft seal air supply pressure transmitters indicates the air supply pressure is less than or equal to 90 psig. [Sections 4.4.4.1.21.3, 4.4.4.1.21.4, Appendix A Table A-1, LAW-DSA] (D.2)

Basis Discussion: The interlock mitigates the release of radioactive and chemically hazardous material through the exhauster shaft seals by supplying back-up air pressure to the exhauster shaft seals.

Verification: Verification is expected to be achieved through the following:

Verif. Method	Verif. By	Plan	Notes/Comments
A	**ENG**	Perform an analysis to determine the offgas exhausters minimum acceptable pressure (≤ 90 psig) for the normal purge air supply to maintain the shaft seal.	May be documented in assessment/evaluation report.
R	**ENG**	Review design to verify there are interlock instruments and components that: • Monitor the pressures of the exhausters purge air seals and initiate the interlock. • Isolate normal air supply.	
T	**SU/ COM**	Perform a test to verify the interlock: • Monitors the pressures of the exhausters purge air seals and initiates the interlock. • Isolates normal air supply.	

3.9.2.8.1.2 Offgas Exhauster Shaft Seal Air Supply Low Pressure Interlock (Melter Feed)

Requirement: Upon detection of low shaft seal air supply pressure (LVP-PT-0156/0160/0164), the interlock shall isolate feed to both melters (Melter 1 - LFP-YV-1208/1212, Melter 2 - LFP-YV-2208/2212). Initiate interlock to isolate PPJ melter feed pump plant air supply valve if pressure is less than or equal to 90 psig. [Sections 4.4.4.1.21.3, 4.4.4.1.21.4, Appendix A Table A-1, LAW-DSA] (D.2)

Basis Discussion: The interlock mitigates the release of radioactive and chemically hazardous material through the exhauster shaft seals by supplying back-up air pressure to the exhauster shaft seals.

Verification: Verification is expected to be achieved through the following:

Verif. Method	Verif. By	Plan	Notes/Comments
R	**ENG**	Review design to verify there are interlock instruments and components that: • Monitor the pressures of the exhausters purge air seals and initiate the interlock. • Stop air to the ADS pumps for both melters. (LFP/LCP).	
T	**SU/ COM**	Perform a test to verify the interlock: • Monitors the pressures of the exhausters purge air seals and initiates the interlock. • Stops air to the ADS pumps for both melters. (LFP/LCP).	

3.9.2.8.1.3 Failed Offgas Exhauster Shaft Seal Air Supply Low Pressure Interlocked Components (failed final control SIS elements)

Requirement: The interlocked components that can fail in a manner that causes a release shall fail to a safe position on loss of control signal or air. The PPJ exhauster shaft normal purge air supply valve (LVP-YV-0157/0161/0165) shall be designed to fail in a closed position on loss of control signal or loss of air to the valve. [Sections 4.4.4.1.21.3, 4.4.4.1.21.4, Appendix A Table A-1, LAW-DSA]

Basis Discussion: By preventing the final control elements of the SIS from failing in a manner that would cause a release, the failure position of these components reduces the probability of a release of radioactive and chemically hazardous material.

Verification: Verification is expected to be achieved through the following:

Verif. Method	Verif. By	Plan	Notes/Comments
R	**ENG**	Review the design for incorporation of the failure position on loss of control signal or air to the following: Exhauster shaft normal purge air supply valves - fail in a CLOSED position	
T	**SU/ COM**	Perform a test to verify the failure position on loss (or simulated loss) of control signal or air to the following: Exhauster shaft normal purge air supply valve - fail in a CLOSED position	

3.9.2.8.2 Deleted

3.9.2.8.3 Deleted

3.9.2.8.4 Offgas Exhauster 1A/1B/1C Shaft Seal Low Pressure Interlock

Requirement: Upon detection of low shaft seal pressure (LVP-PT-0166/0162/0158), the interlock shall open the backup purge air supply bypass around the purge air panels to the affected exhauster by actuating (LVP-YV-0159/0163/0167). The interlock shall open the backup purge air supply bypass around the purge air panels when the shaft seal air supply pressure is less than or equal to 35.7 psig. [Sections 4.4.4.1.20.3, 4.4.4.1.20.4, Appendix A Table A-1, LAW-DSA] (D.2)

Basis Discussion: The interlock limits the release of radioactive and chemically hazardous material through the exhauster shaft seals by supplying back-up air pressure to the exhauster shaft seals. [ALARA]

Verification: Verification is expected to be achieved through the following:

Verif. Method	Verif. By	Plan	Notes/Comments
A	**ENG**	Perform an analysis to determine exhauster's low purge air pressure (≤ 35.7 psig).	May be documented in assessment/evaluation report.
R	**ENG**	Review design to verify there are interlock instruments and components that: • Monitor the exhauster's shaft purge air seals and initiate the interlock. • Activate the backup purge air supply.	
T	**SU/ COM**	Perform a test to verify the interlock: • Monitors the exhauster's shaft purge air seals and initiates the interlock. • Activates the backup purge air supply.	

3.9.2.8.4.1 Failed Offgas Exhauster 1A/1B/1C Shaft Seal Low Pressure Interlocked Components (failed final control SIS elements)

Requirement: The interlocked components that can fail in a manner that causes a release shall fail to a safe position on loss of control signal or air. The exhauster shaft seal air regulator bypass (LVP-YV-0159/0163/0167) shall be designed to fail in an open position on loss of control signal or loss of air to the valve. [Sections 4.4.4.1.20.3, 4.4.4.1.20.4, Appendix A Table A-1, LAW-DSA]

Basis Discussion: By preventing the final control elements of the SIS from failing in a manner that would cause a release, the failure position of these components reduces the probability of a release of radioactive and chemically hazardous material.

Verification: Verification is expected to be achieved through the following:

Verif. Method	Verif. By	Plan	Notes/Comments
R	**ENG**	Review the design for incorporation of the failure position on loss of control signal or air to the following: • Exhauster shaft seal air regulator bypass valves - fail in an OPEN position	
T	**SU/ COM**	Perform a test to verify the failure position on loss (or simulated loss) of control signal or air to the following: • Exhauster shaft seal air regulator bypass valves - fail in an OPEN position	

3.9.2.9 Interface with the LAW Melter Process System

The following interlock originates in the LMP system, and the complete interlock is described in the LMP SDD (24590-LAW-3ZD-LMP-00001). These interlocks are listed here for interface/functionality purposes.

3.9.2.9.1 LMP Melter Plenum High Pressure Interlock

Requirement: Upon detection of high melter plenum pressure (Melter 1 - LMP-PDT-1528/1529, Melter 2 - LMP-PDT-2528/2529), the interlock shall limit offgas generation rate from the affected melter and support offgas system flow by operating the valves (final elements listed below). Interlock shall terminate sources of melter pressurization if melter plenum pressure reaches or exceeds -0.1 in. W.G. relative to the annulus. Melter primary and secondary film cooler air emergency air inbleed valves shall open no sooner than 120 seconds after PPJ high plenum pressure trip terminating plant service air to the film coolers (to allow vacuum to be reestablished in melter if lost).

- Melter 1:
  - Shut film cooler air (LOP-YV-1129/1404)
  - Shut film cooler water (LOP-YV-1109/1405)
  - Shut WESP air (LOP-YV-1098/1161)
  - Open standby offgas line (LOP-YV-1008)
  - Open primary offgas film cooler air inbleed (LOP-YV-1401/1407)
  - Open standby offgas film cooler air inbleed (LOP-YV-1402/1406)
  - Open WESP outlet valve (LOP-FV-1140)
- Melter 2:

- Shut film cooler air (LOP-YV-2129/2404)
- Shut film cooler water (LOP-YV-2109/2405)
- Shut WESP air (LOP-YV-2098/2161)
- Open standby offgas line (LOP-YV-2008)
- Open primary offgas film cooler air inbleed (LOP-YV-2401/2407)
- Open standby offgas film cooler air inbleed (LOP-YV-2402/2406)
- Open WESP outlet valve (LOP-FV-2140)

[Sections 4.4.4.1.1.3, 4.4.4.1.1.4, Appendix A Table A-1, LAW-DSA] (D.2)

Basis Discussion: A high plenum pressure, identified by Melter Plenum High Pressure Interlock (LMP), indicates a loss of vacuum in the plenum, which could lead to a loss of offgas confinement. The interlock limits the release of radioactive and chemically hazardous material by reducing melter offgas load to restore plenum vacuum in the event vacuum is degraded. The plenum pressure is measured as differential pressure relative to the annulus. [ALARA]

Verification: Verification is expected to be achieved through the following:

Verif. Method	Verif. By	Plan	Notes/Comments
R	**ENG**	Review design for incorporation of the system specific interlock physical components.	Additional verification criteria including setpoint determination and testing for this interlock are established in the LMP SDD.
R	**ENG**	Review the design for incorporation of the interlock actions to open the melter primary and standby offgas film cooler air inbleed valves (LOP-YV-1401/-1402/-1406/-1407/-2401/-2402/-2406/-2407) no sooner than 120 seconds after termination of film cooler air	
T	**SU/ COM**	Perform a test to verify the interlock actions to open the melter primary and standby offgas film cooler air inbleed valves (LOP-YV-1401/-1402/-1406/-1407/-2401/-2402/-2406/-2407) no sooner than 120 seconds after termination of film cooler air.	Tested in conjuction with LMP tests
T	**SU/ COM**	Perform a test to verify the following functions are performed upon detection of high pressure (reduced vacuum) in the melter plenum: • Stops air and water flow to the associated primary and standby film coolers. • Opens the associated primary and standby film cooler emergency air inbleeds. • Opens the associated bypass valve from the standby film cooler to the SBS. • Stops air flow to the associated WESP.	The PPJ, LMP, and LOP systems are required to be operational to perform this test. Tested in conjunction with LMP tests

3.9.2.9.1.1 Failed LMP Melter Plenum High Pressure Interlocked Components (failed final control SIS elements)

Requirement: The interlocked components that can fail in a manner that causes a release shall fail to a safe position on loss of control signal or air. The PPJ melter film cooler air supply valve (LOP-YV-1129/1404, or LOP-YV-2129/2404) shall be designed to fail in a closed position on loss of control signal or loss of air to the

valve. The PPJ melter film cooler water supply valve (LOP-YV-1109/1405, LOP-YV-2109/2405) shall be designed to fail in a closed position on loss of control signal or loss of air to the valve. The PPJ WESP purge air valve (LOP-YV-1098/1161, LOP-YV-2098/2161) shall be designed to fail in a closed position on loss of control signal or loss of air to the valve. The PPJ melter standby film cooler isolation valve (LOP-YV-1008 or LOP-YV-2008) shall be designed to fail in an open position on loss of control signal or loss of air to the valve. The PPJ primary offgas film cooler air inbleed (LOP-YV-1401/1407, LOP-YV-2401/2407) shall be designed to fail in an open position. The PPJ standby offgas film cooler air inbleed (LOP-YV-1402/1406, LOP-YV-2402/2406) shall be designed to fail in an open position. The WESP outlet valve (LOP-FV-1140 or LOP-FV-2140) shall be designed to fail in an open position on loss of control signal or loss of air to the valve. [Sections 4.4.4.1.1.3, 4.4.4.1.1.4, Appendix A Table A-1, LAW-DSA]

Basis Discussion: In the event that control signal or air to an SIS component is lost, the failure position of these components limit the release of radioactive and chemically hazardous material by reducing the material at risk in the affected melter.

Verification: Verification is expected to be achieved through the following:

Verif. Method	Verif. By	Plan	Notes/Comments
R	**ENG**	Review the design for incorporation of the failure position on loss of control signal or air to the valve (s): • Melter 1 and 2 Film Cooler Wash Supply Valves – fail in CLOSED position • Melter 1 and 2 WESP Purge Air Valves – fail in a CLOSED position • Melter 1 and 2 Film Cooler Air Supply Valves – fail in a CLOSED position • Melter 1 and 2 Standby Film Cooler Isolation valves – fails in an OPEN position • Melter 1 and 2 Primary Film Cooler Emergency Air Inbleed Valves – fail in an OPEN position • Melter 1 and 2 Standby Film Cooler Emergency Air Inbleed Valves – fail in an OPEN position • Melter 1 and 2 Offgas Flow Control Valves – fail in an OPEN position	
T	**SU/ COM**	Perform a test to verify the failure position on loss (or simulated loss) of control signal or air to the valve (s): • Melter 1 and 2 Film Cooler Wash Supply Valves – fail in CLOSED position • Melter 1 and 2 WESP Purge Air Valves – fail in a CLOSED position • Melter 1 and 2 Film Cooler Air Supply Valves – fail in a CLOSED position • Melter 1 and 2 Standby Film Cooler Isolation valves – fails in an OPEN position • Melter 1 and 2 Primary Film Cooler Emergency Air Inbleed Valves – fail in an OPEN position • Melter 1 and 2 Standby Film Cooler Emergency Air Inbleed Valves – fail in an OPEN position • Melter 1 and 2 Offgas Flow Control Valves – fail in an OPEN position	

3.9.2.10 Interface with the Uninterruptible Power Electrical System

The following interlock originates in the UPE system, and the complete interlocks is described in the LAW UPE SDD (24590-LAW-3ZD-UPE-00001). These interlocks are listed here for interface/functionality purposes.

3.9.2.10.1 Loss of Normal Power to Safety Equipment Interlock

3.9.2.10.1.1 Loss of Normal Power to Safety Equipment Interlock (Terminate Source of Melter Pressurization)

Requirement: Upon detection of loss of normal power (UPE-YY-2303/2403/2503), the interlock shall limit MAR and terminate sources of melter pressurization to both melters (Melter 1 - LOP-YV-1109/1405, Melter 2 - LOP-YV-2109/2405). interlock shall terminate sources of melter pressurization within 5 minutes of a sustained loss of power (maintains event duration within capacity of the UPE). [Sections 4.4.4.1.22.3, 4.4.4.1.22.4, Appendix A Table A-1, LAW-DSA] (D.2)

Basis Discussion: The interlock limits the release of radioactive and chemically hazardous material, in the event of loss of normal power, by terminating feed to both melters, stopping ammonia supply, and reconfiguring the offgas system in the event of a loss of normal power.

Verification: Verification is expected to be achieved through the following:

Verif. Method	Verif. By	Plan	Notes/Comments
R	**ENG**	Review design for incorporation of the system specific interlock physical components.	
T	**SU/ COM**	Perform a test to demonstrate that within 5 minutes of detection of sustained loss of normal power (UPE-YY-2303/-2403/-2503), the interlock performs the following and maintains event duration within capacity of the UPE: • Close Film cooler water valves	

3.9.2.10.1.2 Loss of Normal Power to Safety Equipment Interlock (Reduce Pressurized Air Sources)

Requirement: Upon detection of loss of normal power (UPE-YY-2303/2403/2503), the interlock shall reduce pressurized air sources to both primary offgas systems and support offgas system flow (final elements listed below). The interlock shall terminate film cooler air and WESP air within 5 minutes of a sustained loss of power (maintains event duration within capacity of the UPE). The interlock shall open melter primary and standby offgas film cooler air inbleed valves no sooner than 80.5 seconds after detection of the loss-of-power condition (to allow vacuum to be re-established in melter if lost).

- Close film cooler air valves (Melter 1 - LOP-YV-1129/1404, Melter 2 - LOP-YV-2129/2404)
- Close WESP air valves Melter 1 - (LOP-YV-1098/1161, Melter 2 - LOP-YV-2098/2161)
- Open melter primary offgas film cooler air inbleed valves (Melter 1 - LOP-YV-1401/1407, Melter 2 - LOP-YV-2401/2407))
- Open standby offgas film cooler air inbleed valves (Melter 1 - LOP-YV-1402/1406, Melter 2 - LOP-YV-2402/2406)

[Sections 4.4.4.1.22.3, 4.4.4.1.22.4, Appendix A Table A-1, LAW-DSA] (D.2)

Basis Discussion: The interlock limits the release of radioactive and chemically hazardous material, in the event of loss of normal power, by terminating feed to both melters, stopping ammonia supply, and reconfiguring the offgas system in the event of a loss of normal power.

Verification: Verification is expected to be achieved through the following:

Verif. Method	Verif. By	Plan	Notes/Comments
R	**ENG**	Review design for incorporation of the system specific interlock physical components.	
T	**SU/ COM**	Perform a test to demonstrate that within 5 minutes of detection of sustained loss of normal power (UPE-YY-2303/-2403/-2503), the interlock performs the following and maintains event duration within capacity of the UPE: • Close film cooler air valves • Close WESP air valves • Open melter primary and standby offgas film cooler air inbleed valves no sooner than 80.5 sec after termination of film cooler air (to allow vacuum to be re-established in melter if lost).	

3.9.2.10.1.3 Loss of Normal Power to Safety Equipment Interlock (Reduce Exhauster Suction Load)

Requirement: Upon detection of loss of normal power (UPE-YY-2303/2403/2503), the interlock shall reduce exhauster suction load (final elements listed below). The interlock shall reduce suction loads within 5 minutes of a sustained loss of power (maintains event duration within capacity of the UPE).

- Open standby offgas line valve (LOP-YV-1008/2008)
- Open WESP outlet valve (LOP-FV-1140/2140)
- Close vessel vent isolation valve (LVP-PV-0072)
- Open carbon bed bypass valve (LVP-YV-0403)
- Open SCO/SCR bypass valve (LVP-YV-0501)
- Open caustic scrubber bypass valve (LVP-YV-0097)

[Sections 4.4.4.1.22.3, 4.4.4.1.22.4, Appendix A Table A-1, LAW-DSA] (D.2)

Basis Discussion: The interlock limits the release of radioactive and chemically hazardous material, in the event of loss of normal power, by terminating feed to both melters, stopping ammonia supply, and reconfiguring the offgas system in the event of a loss of normal power.

Verification: Verification is expected to be achieved through the following:

Verif. Method	Verif. By	Plan	Notes/Comments
R	**ENG**	Review design for incorporation of the system specific interlock physical components.	
T	**SU/ COM**	Perform a test to demonstrate that within 5 minutes of detection of sustained loss of normal power (UPE-YY-2303/-2403/-2503), the interlock performs the following and maintains event duration within capacity of the UPE: • Open standby offgas line valve • Open WESP outlet valve	

Verif. Method	Verif. By	Plan	Notes/Comments
		• Close vessel vent isolation valve • Open carbon bed bypass valve • Open SCO/SCR bypass valve prior to the caustic scrubber bypass valve • Open caustic scrubber bypass valve	

3.9.2.10.1.4 Loss of Normal Power to Safety Equipment Interlock (Reduce Sources of Heat and Air in Secondary Offgas)

Requirement: Upon detection of loss of normal power (UPE-YY-2303/2403/2503), the interlock shall reduce sources of heat and air in the secondary offgas system (final elements listed below). Actuate interlock such that the sources of heat load and air are in the offgas system are reduced within 5 minutes of a sustained loss of power (maintains event duration within capacity of the UPE).

- Close SCO/SCR dilution air supply valve (LVP-YV-0538)
- Close ammonia supply valve (LVP-YV-0528/0560)
- Turn off SCO/SCR heater control contactor (LVP-CTR-00002)

[Sections 4.4.4.1.22.3, 4.4.4.1.22.4, Appendix A Table A-1, LAW-DSA] (D.2)

Basis Discussion: The interlock limits the release of radioactive and chemically hazardous material, in the event of loss of normal power, by terminating feed to both melters, stopping ammonia supply, and reconfiguring the offgas system in the event of a loss of normal power.

Verification: Verification is expected to be achieved through the following:

Verif. Method	Verif. By	Plan	Notes/Comments
R	**ENG**	Review design for incorporation of the system specific interlock physical components.	
T	**SU/ COM**	Perform a test to demonstrate that within 5 minutes of detection of sustained loss of normal power (UPE-YY-2303/-2403/-2503), the interlock performs the following and maintains event duration within capacity of the UPE: • Close SCO/SCR dilution air supply valve • Close ammonia supply valve • Turn off SCO/SCR heater control	

3.9.2.10.1.5 Loss of Normal Power to Safety Equipment Interlock (Fix Exhauster Speed)

Requirement: Upon detection of loss of normal power (UPE-YY-2303/2403/2503), the interlock shall restrict the exhausters to a speed compatible with the reduced offgas load (final elements listed below). The interlock shall set the exhausters to a fixed speed and open vacuum breaker line valves within 5 minutes of a sustained loss of power (maintains event duration within capacity of the UPE).

- Set exhauster(s) to fixed 2020RPM speed (LVP-EXHR-00001A [LVP-YC-0023B], LVP-EXHR-00001B [LVP-YC-0020B], and LVP-EXHR-00001C [LVP-YC-0017B])
- Open vacuum breaker line valves (LVP-YV-0453/0454)

[Sections 4.4.4.1.22.3, 4.4.4.1.22.4, Appendix A Table A-1, LAW-DSA] (D.2)

Basis Discussion: The interlock limits the release of radioactive and chemically hazardous material, in the event of loss of normal power, by terminating feed to both melters, stopping ammonia supply, and reconfiguring the offgas system in the event of a loss of normal power.

Verification: Verification is expected to be achieved through the following:

Verif. Method	Verif. By	Plan	Notes/Comments
R	**ENG**	Review design for incorporation of the system specific interlock physical components.	
T	**SU/ COM**	Perform a test to demonstrate that within 5 minutes of detection of sustained loss of normal power (UPE-YY-2303/-2403/-2503), the interlock performs the following and maintains event duration within capacity of the UPE: • Set exhauster(s) to fixed speed • Open vacuum breaker line valves	

3.9.2.10.1.6 Failed Loss of Normal Power to Safety Equipment Interlocked Components (failed final control SIS elements)

Requirement: The interlocked components that can fail in a manner that causes a release shall fail to a safe position on loss of control signal or air. The PPJ melter film cooler air supply valve (LOP-YV-1129/1404, LOP-YV-2129/2404) shall be designed to fail in a closed position on loss of control signal or loss of air to the valve. The PPJ melter film cooler water supply valve (LOP-YV-1109/1405, LOP-YV-2109/2405) shall be designed to fail in a closed position on loss of control signal or loss of air to the valve. The PPJ WESP purge air valve (LOP-YV-1098/1161, LOP-YV-2098/2161) shall be designed to fail in a closed position on loss of control signal or loss of air to the valve. The PPJ melter standby film cooler isolation valve (LOP-YV-1008 or LOP-YV-2008) shall be designed to fail in an open position on loss of control signal or loss of air to the valve. The PPJ melter 1 and 2 primary film cooler emergency air inbleed valve (LOP-YV-1401/1407, LOP-YV-2401/2407) shall be designed to fail in an open position on loss of control signal or loss of air to the valve. The PPJ melter standby film cooler emergency air inbleed valve (LOP-YV-1402/1406, LOP-YV-2402/2406) shall be designed to fail in an open position on loss of control signal or loss of air to the valve. The PPJ melter offgas flow control valve (LOP-FV-1140 or LOP-FV-2140) shall be designed to fail in an open position on loss of control signal or loss of air to the valve. The PPJ carbon bed adsorber bypass valve (LVP-YV-0403) shall be designed to fail in an open position on loss of control signal or loss of air to the valve. The thermal catalytic oxidizer skid bypass valve (LVP-YV-0501) shall be designed to fail in an open position on loss of control signal or loss of air to the valve. The PPJ ammonia dilution air supply valve (LVP-YV-0538) shall be designed to fail in a closed position on loss of control signal or loss of air to the valve. The PPJ ammonia dilution ammonia supply valve (LVP-YV-0528/0560) shall be designed to fail in a closed position on loss of control signal or loss of air to the valve. The thermal catalytic oxidizer heater contactor (LVP-CTR-00002) shall be designed to fail in an off position on loss of control signal to the heater. The caustic scrubber bypass valve (LVP-YV-0097) shall be designed to fail in an open position on loss of control signal or loss of air to the valve. The vacuum breaker line valve (LVP-YV-0453/0454) shall be designed to fail in an open position on loss of control signal or loss of air to the valve. The offgas exhauster adjustable speed drive (LVP-ASD-00001A, B, C) shall be designed to fail in a minimum fixed speed position, that will maintain the melter 1 and 2 plenums under vacuum, on loss of control signal to the drive. [Sections 4.4.4.1.22.3, 4.4.4.1.22.4, Appendix A Table A-1, LAW-DSA]

Basis Discussion: By preventing the final control elements of the SIS from failing in a manner that would cause a release, the failure position of these components reduces the probability of a release of radioactive and chemically hazardous material.

Verification: Verification is expected to be achieved through the following:

Verif. Method	Verif. By	Plan	Notes/Comments
R	**ENG**	Review the design for incorporation of the failure position on loss of control signal or air to the valve (s): • Melter film cooler air supply valves - fail in a CLOSED position • Melter film cooler water supply valves - fail in a CLOSED position • WESP purge air valves - fail in a CLOSED position • Melter standby film cooler isolation valve - fails in an OPEN position • Melter 1 and 2 primary film cooler emergency air inbleed valves - fail in an OPEN position • Melter standby film cooler emergency air inbleed valves - fail in an OPEN position • Melter offgas flow control valve - fails in an OPEN position • Carbon bed adsorber bypass valve - fails in an OPEN position • Thermal catalytic oxidizer skid bypass valve - fails in an OPEN position • Ammonia dilution air supply valves - fail in a CLOSED position • Ammonia dilution ammonia supply valves - fail in a CLOSED position • Thermal catalytic oxidizer heater - fails in an OFFposition • Caustic scrubber bypass valve - fails in an OPEN position • Vacuum Breaker Line Valves - fail in an OPEN position • Offgas exhausters - fail in a minimum FIXED speed position	

T	**SU/ COM**	Perform a test to verify the failure position on loss (or simulated loss) of control signal or air to the valve (s): • Melter film cooler air supply valves - fail in a CLOSED position • Melter film cooler water supply valves - fail in a CLOSED position • WESP purge air valves - fail in a CLOSED position • Melter standby film cooler isolation valve - fails in an OPEN position • Melter 1 and 2 primary film cooler emergency air inbleed valves - fail in an OPEN position • Melter standby film cooler emergency air inbleed valves - fail in an OPEN position • Melter offgas flow control valve - fails in an OPEN position • Carbon bed adsorber bypass valve - fails in an OPEN position • Thermal catalytic oxidizer skid bypass valve - fails in an OPEN position • Ammonia dilution air supply valves - fail in a CLOSED position • Ammonia dilution ammonia supply valves - fail in a CLOSED position • Thermal catalytic oxidizer heater - fails in an OFFposition • Caustic scrubber bypass valve - fails in an OPEN position • Vacuum Breaker Line Valves - fail in an OPEN position • Offgas exhausters - fail in a minimum FIXED speed position	

3.9.2.11 Deleted

3.9.2.12 Process Monitoring for the Dangerous Waste Permit

Requirement: The LAW Facility LOP/LVP equipment categorized as tanks or miscellaneous equipment shall include pressure sensing and level detection capabilities and interface with the process control system (PCJ) to remotely monitor pressure and liquid level. [Sections 9.6.1, and 14.10.1.1, BOD][Section 7.1, ORD][Section III.10.E.5.d, DWP][Section C.7(d)(3)(iv), WTP Contract] (D.1)

Basis Discussion: Process monitoring capability is provided to ensure that the LOP/LVP system and equipment function as intended during operations. Pressure is monitored to ensure that a vacuum is maintained in the LOP/LVP system vessels for removal of hazardous gases by the LAW LVP system. The pressure sensors report data to the PCJ system. Vessel liquid level is monitored to ensure the batch transfer is successfully completed to the desired vessel level and does not exceed the maximum operating batch volume. Level detection is also used for measuring batch volume during transfers.

Verification: Verification is expected to be achieved through the following:

Verif. Method	Verif. By	Plan	Notes/Comments
R	**ENG**	Review design to verify the capability of remotely monitoring vessel pressure and measuring effluent level.	

3.9.2.13 Process Control for the Dangerous Waste Permit

Requirement: The LAW Facility LOP/LVP equipment categorized as tanks or miscellaneous equipment shall include process control capabilities and interface with the PCJ system. Normal process operating controls and trips are used to prevent vessel overfill, and backup, where deemed necessary by the control selection process safety reviews and by an independent trip system. [Sections 6.7.5, 14.10.1.1, BOD][Section III.10.E.5.d, DWP][Section C.7(d)(3)(iv), WTP Contract] (D.1)

Basis Discussion: Process monitoring capability is provided to ensure that the LOP/LVP system and equipment function as intended during operations in the baseline and DFLAW configurations. Vessel liquid level is monitored to ensure the batch transfer is successfully completed to the desired vessel level and does not exceed the maximum operating batch volume. Level detection is also used for measuring batch volume during transfers.

Verification: Verification is expected to be achieved through the following:

Verif. Method	Verif. By	Plan	Notes/Comments
R	**ENG**	Review design to verify the capability of remotely monitoring vessel effluent level.	

3.9.2.14 Air Emissions Control Instrumentation

3.9.2.14.1 BARCT WESP

Requirement: The BARCT WESP electric current shall be monitored by a current transmitter. [Emission unit 547, NOC 1057][Section C.7(d)(3)(iv), WTP Contract]

Basis Discussion: WESP monitoring capability is provided to ensure that the WESP functions as intended during operations in the baseline and DFLAW configurations.

Verification: Verification is expected to be achieved through the following:

Verif. Method	Verif. By	Plan	Notes/Comments
R	**ENG**	Review the design and vendor data to verify conformance with the BARCT instrumentation requirements in the NOC Air Permit.	May be documented in assessment/evaluation report.

3.9.2.14.2 BARCT Exhaust Fans

Requirement: The BARCT exhaust fan flow indication parameter shall be measured via an averaging pitot tube stack flowmeter with magnehelic differential pressure gauge or transmitter. [Emission unit 547, NOC 1057][Section C.7(d)(3)(iv), WTP Contract]

Basis Discussion: Exhaust fan flow monitoring capability is provided to ensure that the exhaust fans function as intended during operations in the baseline and DFLAW configurations.

Verification: Verification is expected to be achieved through the following:

Verif. Method	Verif. By	Plan	Notes/Comments
R	**ENG**	Review the design and vendor data to verify conformance with the BARCT instrumentation requirements in the NOC Air Permit.	May be documented in assessment/evaluation report.

3.9.2.14.3 Carbon Adsorption Bed

Requirement: The BARCT carbon adsorption bed HF and HCl monitoring shall be by FT-IR and iodine-129 monitoring shall be done with the stack iodine sampler. [Emission unit 547, NOC 1057][Section C.7(d)(3)(iv), WTP Contract]

Basis Discussion: Carbon adsorption bed monitoring by FT-IR and iodine-129 monitoring with a stack sampler is provided to verify emissions in the baseline and DFLAW configurations.

Verification: Verification is expected to be achieved through the following:

Verif. Method	Verif. By	Plan	Notes/Comments
R	**ENG**	Review the design and vendor data to verify conformance with the BARCT instrumentation requirements in the NOC Air Permit.	May be documented in assessment/evaluation report.

3.9.2.14.4 BARCT HEPA Preheater Temperature

Requirement: The BARCT HEPA preheater inlet and outlet temperatures shall be monitored via RTDs, and temperature indication shall be provided. [Emission unit 547, NOC 1057][Section C.7(d)(3)(iv), WTP Contract] (A.5)

Basis Discussion: HEPA temperature monitoring capabilities to provide indications of HEPA overheating during operations in the baseline and DFLAW configurations.

Verification: Verification is expected to be achieved through the following:

Verif. Method	Verif. By	Plan	Notes/Comments
R	**ENG**	Review the design and vendor data to verify conformance with the BARCT instrumentation requirements in the NOC Air Permit.	May be documented in assessment/evaluation report.

3.9.2.14.5 BARCT HEPA Pressure Differential

Requirement: The maximum differential pressure across each filter BARCT HEPA stage shall be measured by strain gauge pressure sensors. [Emission unit 547, NOC 1057][Section C.7(d)(3)(iv), WTP Contract]

Basis Discussion: HEPA differential pressure monitoring capability is provided to ensure HEPA filters function as intended during operations in the baseline and DFLAW configurations.

Verification: Verification is expected to be achieved through the following:

Verif. Method	Verif. By	Plan	Notes/Comments
R	**ENG**	Review the design and vendor data to verify conformance with the BARCT instrumentation requirements in the NOC Air Permit.	May be documented in assessment/evaluation report.

3.9.2.14.6 BARCT HEPA Temperature Differential

Requirement: The temperature differential across the HEPA shall be measured by resistance temperature detectors (RTDs). [Emission unit 547, NOC 1057][Section C.7(d)(3)(iv), WTP Contract]

Basis Discussion: HEPA filter differential pressure monitoring capability is provided to ensure that the HEPA filters function as intended during operations in the baseline and DFLAW configurations.

Verification: Verification is expected to be achieved through the following:

Verif. Method	Verif. By	Plan	Notes/Comments
R	**ENG**	Review the design and vendor data to verify conformance with the BARCT instrumentation requirements in the NOC Air Permit.	May be documented in assessment/evaluation report.

3.9.2.14.7 BARCT HEPA Flow

Requirement: The flow of the BARCT HEPA filtration system shall be measured by an averaging pitot tube with magnehelic differential pressure gauge or transmitter or thermal flowmeter. [Emission unit 547, NOC 1057][Section C.7(d)(3)(iv), WTP Contract]

Basis Discussion: HEPA filter flow monitoring capability is provided to ensure that the HEPA filters function as intended during operations in the baseline and DFLAW configurations.

Verification: Verification is expected to be achieved through the following:

Verif. Method	Verif. By	Plan	Notes/Comments
R	**ENG**	Review the design and vendor data to verify conformance with the BARCT instrumentation requirements in the NOC Air Permit.	May be documented in assessment/evaluation report.

3.9.2.14.8 BARCT HEPA Filter Dilution Air Injection Differential Pressure

Requirement: The maximum differential pressure across the C3 Dilution Air Injection HEPA filter shall be measured by strain gauge pressure sensor or transmitter. The flow of the system shall be measured by vortex flowmeter, swirl flowmeter, or thermal flowmeter. [Emission unit 547, NOC 1057][Section C.7(d)(3)(iv), WTP Contract]

Basis Discussion: C3 Dilution Air Injection HEPA filter monitoring capability is provided to ensure the system and equipment function as intended during operations in the baseline and DFLAW configurations.

Verification: Verification is expected to be achieved through the following:

Verif. Method	Verif. By	Plan	Notes/Comments
R	**ENG**	Review the design and vendor data to verify conformance with the BARCT instrumentation requirements in the NOC Air Permit.	May be documented in assessment/evaluation report.

3.9.2.14.9 BARCT SBS Level

Requirement: The BARCT SBS liquid level shall be measured by radar level transmitter. [Emission unit 547, NOC 1057][Section C.7(d)(3)(iv), WTP Contract]

Basis Discussion: SBS level monitoring capability is provided to ensure the system and equipment function as intended during operations in the baseline and DFLAW configurations.

Verification: Verification is expected to be achieved through the following:

Verif. Method	Verif. By	Plan	Notes/Comments
R	**ENG**	Review the design and vendor data to verify conformance with the BARCT instrumentation requirements in the NOC Air Permit.	May be documented in assessment/evaluation report.

3.9.2.15 Pneumatic Permissive

3.9.2.15.1 Pneumatic Permissive for SCO/SCR skid Bypass Valves

Requirement: The pneumatic permissive shall prevent the caustic scrubber bypass valve (LVP-YV-0097) from opening while the SCO/SCR skid bypass valve (LVP-YV-0501) is closed. Independent of PPJ time delay, the SCO/SCR skid bypass (LVP-YV-0501) shall begin to open before or at the same time as the caustic scrubber bypass valve (LVP-YV-0097) begins to open. Independent of PPJ time delay, the SCO/SCR skid bypass (LVP-YV-0501) shall be in its end state open position prior to the caustic scrubber bypass valve (LVP-YV-0097) reaching its end state open position. [Sections 4.4.3.15.3,4.4.3.15.4 Appendix A Table A-1, LAW-DSA]

Basis Discussion: The pneumatic permissive reduces the probability of a release of radioactive and chemically hazardous material by preventing a failure of the offgas confinement boundary or exhausters from offgas high temperatures.

Verification: Verification is expected to be achieved through the following:

Verif. Method	Verif. By	Plan	Notes/Comments
R	**ENG**	Review design to verify a pneumatic permissive for the SCO/SCR skid bypass valve (LVP-YV-0501) • Opens before or at the same time the scrubber bypass valve (LVP-YV-0097) begins to open • Be in its end state open position prior to the caustic scrubber bypass valve (LVP-YV-0097) reaching its end state open position	

Verif. Method	Verif. By	Plan	Notes/Comments
T	**SU/ COM**	Test to verify that the pneumatic permissive for the SCO/SCR skid bypass valve (LVP-YV-0501) • Opens before or at the same time the scrubber bypass valve (LVP-YV-0097) begins to open • Be in its end state open position prior to the caustic scrubber bypass valve (LVP-YV-0097) reaching its end state open position	

3.9.2.15.2 Pneumatic Permissive for Carbon Bed Adsorber Bypass Valves

Requirement: The pneumatic permissive shall prevent the carbon bed adsorber inlet valves (LVP-YV-0407, LVP-YV-0415, LVP-YV-0449) from closing while the carbon bed adsorber bypass valve (LVP-YV-0403) is closed. Independent of PPJ time delay, the carbon bed adsorber bypass valve (LVP-YV-0403) shall begin to open before or at the same time as the carbon bed adsorber inlet valves (LVP-YV-0407, LVP-YV-0415, LVP-YV-0449) begin to close. Independent of PPJ time delay, the carbon bed adsorber bypass valve (LVP-YV-0403) shall be in its end state open position prior to the carbon bed adsorber inlet valves (LVP-YV-0407, LVP-YV-0415, LVP-YV-0449) reaching their end state closed position. [Sections 4.4.3.15.3,4.4.3.15.4 Appendix A Table A-1, LAW-DSA]

Basis Discussion: The pneumatic permissive reduces the probability of a release of radioactive and chemically hazardous material by preventing a failure of the offgas confinement boundary or exhausters from offgas high temperatures.

Verification: Verification is expected to be achieved through the following:

Verif. Method	Verif. By	Plan	Notes/Comments
R	**ENG**	Review design to verify a pneumatic permissive for the carbon bed adsorber bypass valve (LVP-YV-0403) • Opens before or at the same time the carbon bed adsorber inlet valves (LVP-YV-0407, LVP-YV-0415, LVP-YV-0449) begins to close • Be in its end state open position prior to the carbon bed adsorber inlet valves (LVP-YV-0407, LVP-YV-0415, LVP-YV-0449) reaching their end state closed position	
T	**SU/ COM**	Test to verify that the pneumatic permissive for the carbon bed adsorber bypass valve (LVP-YV-0403) • Opens before or at the same time the carbon bed adsorber inlet valves (LVP-YV-0407, LVP-YV-0415, LVP-YV-0449) begins to close • Be in its end state open position prior to the carbon bed adsorber inlet valves (LVP-YV-0407, LVP-YV-0415, LVP-YV-0449) reaching their end state closed position	

3.9.3 System Interface Requirements

3.9.3.1 Process Control System - Instruments

Requirement: Instruments connected to the PCJ system shall not perform any credited active safety function. Instruments connected to the PCJ may include and perform safety boundary or retention functions. LOP and LVP system instruments shall use standard commercially available instrumentation and communication protocols to interconnect to the PCJ system. Fieldbus or Profibus communication may be used. [Section 9.4.1, BOD] (D.1)

Basis Discussion: The PCJ is used as the normal process control system. The PCJ allows remote operator control and monitoring of the LOP and LVP processes (e.g., provisions for level, temperature, pressure, and cooling along with the ability to control and monitor pumps and valves to operate the LOP and LVP system). Alarms and warnings are provided to bring operator attention to and allow rectification of abnormal process situations.

The instruments are part of the LOP and LVP. The system logic and control software is part of the LOP and LVP, but resides and is implemented by the PCJ. The software interfaces with software and hardware on other systems to collectively form an integrated control system for the WTP Project. Software requirements originate from 24590-WTP-QAM-QA-06-001, *Quality Assurance Manual* (QAM), and the procedure for software life cycle management (24590-WTP-GPP-SQP-208, *Plant Software Life Cycle Management*).

Verification: Verification is expected to be achieved through the following:

Verif. Method	Verif. By	Plan	Notes/Comments
R	**ENG**	Verify required specifications (related to PCJ interface) are included in material requisitions (MR), used to procure instruments.	Perform a design review, including applicable procurement documentation, to verify system instruments that interconnect to the PCJ are standard commercially available. Documented in an evaluation and assessment.

3.9.4 Other Technical, Specialty, Operations, and Maintenance Requirements

Not used.

3.10 Other Structures, Systems, or Component Requirements

3.10.1 Mission and Functional / Performance Requirements (Including States and Modes)

3.10.1.1 Deleted, Included in 3.4.2.22.1 and 3.4.23.1

3.10.2 Nuclear Safety, ALARA, Environmental, and Other Regulatory Requirements

3.10.2.1 Function of the Stack

Requirement: The offgas shall have a continuous flowpath to an elevated release point. The LVP exhauster stack height shall be at least 198.5 ft. [Sections 4.4.3.1.3, 4.4.3.1.4, Appendix A Table A-1, LAW-DSA] (A.8)**Basis Discussion:** The confinement boundary mitigates the release of radioactive and chemically hazardous material by providing a primary release pathway from the melter through the melter offgas system exhausters and to the stack exit. [ALARA]

Verification: Verification is expected to be achieved through the following:

Verif. Method	Verif. By	Plan	Notes/Comments
A	**ENG**	Perform an analysis to determine the appropriate stack height (minimum of 198.5 ft) for a satisfactory release elevation.	
R	**ENG**	Review design to verify alignment with analysis.	May be documented in assessment/evaluation report.

3.10.2.2 Offgas Confinement Boundary Manual Valves

Requirement: The offgas shall be provided with a continuous flowpath. Offgas confinement boundary manual valves required for operation mode shall be locked in the open position. [Section 4.4.3.1.3, 4.4.3.1.4, Appendix A Table A-1, LAW-DSA]

Basis Discussion: The confinement boundary mitigates the release of radioactive and chemically hazardous material by providing a primary release pathway from the melter through the melter offgas system exhausters and to the stack exit. [ALARA]

Verification: Verification is expected to be achieved through the following:

Verif. Method	Verif. By	Plan	Notes/Comments
R	**ENG**	Review design to verify that manual valves within the offgas confinement boundary are identified as locked open to ensure a continuous flowpath.	

3.10.2.3 Valves (LOP-FV-1140 and LOP-FV-2140) Design (WESP Modulating Valves)

Requirement: The WESP modulating valves shall be designed with a physical stop in order to prevent full-closure and maintain offgas system vacuum in upstream component. The WESP modulating valves mechanical stops on the actuator shall be designed such that the valve can be no less than 15% open. [Sections 4.4.3.11.3, 4.4.3.11.4, Appendix A Table A-1, LAW-DSA]

Basis Discussion: WESP modulating valves mechanical stops ensures the valve cannot fail fully closed.

Verification: Verification is expected to be achieved through the following:

Verif. Method	Verif. By	Plan	Notes/Comments
R	**ENG**	Review design to verify that WESP modulating valves (LOP-FV-1140 and LOP-FV-2140) have mechanical stops on the actuator such that the valve can be no less than 15% open.	

3.10.2.4 Stack Drain Line Restriction Orifice (LVP-RO-00002)

Requirement: LVP-RO-00002 shall maintain return flow through the stack condensate drain less than a level that will overwhelm the ability of the LVP exhausters to maintain melter vacuum. LVP-RO-00002 shall limit the flow to no greater than 3.9 SCFM of air. [Sections 4.4.3.18.3, 4.4.3.18.4, Appendix A Table A-1, LAW-DSA]

Basis Discussion: By limiting offgas return flow from the stack condensate drain, it mitigates the release of radioactive and chemically hazardous material.

Verification: Verification is expected to be achieved through the following:

Verif. Method	Verif. By	Plan	Notes/Comments
R	**ENG**	Review design to verify that LVP-RO-00002 limits flow to no greater than 3.9 SCFM of air.	
T	**SU/ COM**	Test to verify that LVP-RO-00002 limits flow to no greater than 3.9 SCFM of air.	

3.10.2.5 Vessel Vent Restriction Orifice (LVP-RO-00001)

Requirement: LVP-RO-00001 shall maintain vessel vent header in-flow to the LVP header less than a level that will overwhelm the ability of the LVP exhausters to maintain melter vacuum. LVP-RO-00001 shall limit the flow to no greater than 26.7 scfm. [Sections 4.4.3.19.3, 4.4.3.19.4, Appendix A Table A-1, LAW-DSA]

Basis Discussion: Limiting air ingress to the offgas system through the vessel vent header mitigates a release of radioactive and chemically hazardous material.

Verification: Verification is expected to be achieved through the following:

Verif. Method	Verif. By	Plan	Notes/Comments
R	**ENG**	Review design to verify that LVP-RO-00001 limits flow to no greater than 26.7 scfm.	

Verif. Method	Verif. By	Plan	Notes/Comments
T	SU/ COM	Test to verify that LVP-RO-00001 limits flow to no greater than 26.7 scfm.	

3.10.3 System Interface Requirements

3.10.3.1 Inspections

Requirement: The LOP and LVP systems shall provide provisions to conduct appropriate periodic inspections and functional testing to ensure structural and leak-tight integrity of components, operability and performance of components, and operability of the systems. [Section 15.1, ORD]

Basis Discussion: None.

Verification: Verification is expected to be achieved through the following:

Verif. Method	Verif. By	Plan	Notes/Comments
R	ENG	Review design to verify provisions for inspections and functional testing to ensure structural and leak-tight integrity of components.	

3.10.4 Other Technical, Specialty, Operations, and Maintenance Requirements

3.10.4.1 Vessel Flushing and Washing

Requirement: The LOP and LVP systems' process vessels shall be equipped with interior perimeter spray rings, or equivalent, for decontamination or flushing. [Section 14.2, ORD]

Basis Discussion: None. [ALARA]

Verification: Verification is expected to be achieved through the following:

Verif. Method	Verif. By	Plan	Notes/Comments
R	ENG	Review design to verify vessels are equipped with interior perimeter spray rings, or equivalent, for decontamination or flushing.	

3.10.4.2 Piping without Suspended Solids

Requirement: The LOP and LVP systems' utility piping that contains fluids without suspended solids may be routed level and shall have sufficient high point vents and low point drains to ensure that all the piping can be drained for maintenance and decommissioning. [Section 14.3, ORD]

Basis Discussion: Utility piping containing fluids without suspended solids can be level with high point vents and low point drains such that the piping can be drained. [ALARA]

Verification: Verification is expected to be achieved through the following:

Verif. Method	Verif. By	Plan	Notes/Comments
R	**ENG**	Review design to verify that piping has sufficient high point vents and low point drains to ensure that all the piping can be drained.	

3.10.4.3 Piping with Suspended Solids

Requirement: The LOP and LVP systems' piping that contains fluids with suspended solids shall have high point vents, low point drains, and be sloped to drains/vessels as necessary to ensure that the fluids and solids can be flushed and drained from the piping. [Section 14.3, ORD]

Basis Discussion: None. [ALARA]

Verification: Verification is expected to be achieved through the following:

Verif. Method	Verif. By	Plan	Notes/Comments
R	**ENG**	Review design to verify that piping, which contains fluids with suspended solids, have sufficient high point vents, low point drains, and are sloped to drains/vessels.	

3.10.4.4 Piping Flushing

Requirement: The LOP and LVP systems' piping shall provide the capability to be flushed and drained with no traps or pockets that can accumulate liquids or solids. Piping shall be free-draining without traps/seals, unless there are traps/seals that will allow operator action for drainage. [Section 7.1, 14.1, 14.3, ORD]

Basis Discussion: The piping includes, where appropriate, vapor handling vessels, exhaust duct systems, seal pots, and seal loops. [ALARA]

Verification: Verification is expected to be achieved through the following:

Verif. Method	Verif. By	Plan	Notes/Comments
R	**ENG**	Review design to verify piping is capable of being flushed and drained, and does not include traps or pockets that can accumulate liquids or solids	

3.10.4.5 Piping Flushes – Transfer Lines

Requirement: The LOP and LVP systems' piping flushing facilities shall provide for normal flushes of transfer lines and for unplugging efforts when necessary between the LAW Facility, the PT Facility, and the EMF. [Section 14.3, ORD]

Basis Discussion: None. [ALARA]

Verification: Verification is expected to be achieved through the following:

Verif. Method	Verif. By	Plan	Notes/Comments
A	**ENG**	Perform an analysis to determine required piping flushing facilities for normal flushes of transfer lines and for unplugging efforts when necessary between the LAW Facility, the PT Facility, and the EMF.	May be documented in assessment/evaluation report.

3.10.4.6 Remotely Operated Valves

Requirement: The LOP and LVP systems' valves shall be capable of being remotely operated where valves are used in routine operations, or where accessibility is difficult. [Section 14.4, ORD]

Basis Discussion: None. [ALARA]

Verification: Verification is expected to be achieved through the following:

Verif. Method	Verif. By	Plan	Notes/Comments
R	**ENG**	Review design to verify valves, which are difficult to access or are used for routine operations, are capable of being remotely operated.	May be documented in assessment/evaluation report.

3.10.4.7 Decontamination

Requirement: The LOP and LVP systems' piping and valve systems shall have the capabilities of adding decontamination chemicals to the process vessels. [Section 14.1, ORD]

Basis Discussion: None. [ALARA]

Verification: Verification is expected to be achieved through the following:

Verif. Method	Verif. By	Plan	Notes/Comments
R	**ENG**	Review design to determine which process vessels require the capability of adding decontamination chemicals.	May be documented in assessment/evaluation report.
R	**ENG**	Review design to verify process vessels that require the capability of adding decontamination chemicals can perform that function.	

3.10.4.8 Bulges

Requirement: The LOP and LVP systems' equipment requiring maintenance and that comes into contact with the radioactive process fluids shall be in stainless steel bulges. Wash rings shall be provided for wash-down of all areas of the bulge. [Section 10.4, ORD]

Basis Discussion: Process isolation valves, pumps, and instruments are examples of equipment that require maintenance and would be in bulges. [ALARA]

Verification: Verification is expected to be achieved through the following:

Verif. Method	Verif. By	Plan	Notes/Comments
R	**ENG**	Review design to verify stainless steel bulges are used to contain equipment requiring maintenance that encounter the radioactive process fluids and wash rings are provided.	

3.10.4.9 Bulges Contamination Prevention

Requirement: The LOP and LVP systems' relief valves and rupture disks shall not release waste into the bulge area. [Section 10.4, ORD]

Basis Discussion: Minimizes contamination and exposure. [ALARA]

Verification: Verification is expected to be achieved through the following:

Verif. Method	Verif. By	Plan	Notes/Comments
R	**ENG**	Review design to verify relief valves and rupture disks do not release waste in the bulge area.	

3.10.4.10 Bulges Shielding

Requirement: The LOP and LVP systems' bulges shall include adequate provision for shielding to allow access to the bulge internals. [Section 10.4, ORD]

Basis Discussion: None. [ALARA]

Verification: Verification is expected to be achieved through the following:

Verif. Method	Verif. By	Plan	Notes/Comments
R	**ENG**	Review design to verify bulges provide adequate shielding to allow access to the bulge internals.	

3.10.4.11 Bulge Access Ports

Requirement: The LOP and LVP systems' bulges shall include access ports to allow inspection of bulge internals using closed circuit television or fiber-optics without the need to remove bulge shielding. [Section 10.4, ORD]

Basis Discussion: None. [ALARA]

Verification: Verification is expected to be achieved through the following:

Verif. Method	Verif. By	Plan	Notes/Comments
R	**ENG**	Review design to verify access ports are provided to allow inspection of bulge internals using closed-circuit televisions or fiber-optics without the need to remove bulge shielding.	

3.10.4.12 Valves Position Indicators

Requirement: The LOP and LVP systems' valves used in process service, or supporting the process in bulges or other remote locations, shall be equipped with highly reliable position indicators. [Section 14.4, ORD]

Basis Discussion: Remotely operated valves normally repositioned to support processing (this includes support systems) should have position indication from directly coupled positioning mechanisms unless other indications are available of valve positon such as flow, level, pressure, etc. The indication signal can be visual, mechanical, electric, or electronic based on the valve location and type of valve. [ALARA]

Verification: Verification is expected to be achieved through the following:

Verif. Method	Verif. By	Plan	Notes/Comments
R	**ENG**	Review design to verify process valves in bulges or remote locations are equipped with highly reliable position indicators.	

3.10.4.13 Pressure Relief Valve Configuration

Requirement: The LOP and LVP systems' pressure relief valves shall be configured using a full port three-way valve, dual PSVs, and drain valves on each leg, unless a redundant train is provided. The three-way valve shall have the following design provisions:

- Designed such that there is no position where the internal plug, disc, or ball would isolate or block both PSVs simultaneously.
- Capable of being locked (with use of either an integral or commercially available after market locking device) in a position that only allows one port to be fully open and the other port fully closed.
- This configuration is required on vessels and systems that cannot be easily isolated, or when system draining and isolation would have a negative impact on safety or productivity.

[Section 14.4, ORD]

Basis Discussion: Configuration allows a pressure relief valve to be removed from service for maintenance without shutting down the system while maintaining over-pressure protection.

Verification: Verification is expected to be achieved through the following:

Verif. Method	Verif. By	Plan	Notes/Comments
R	**ENG**	Review design to verify pressure relief valves are configured correctly to their design provisions.	

3.10.4.14 Valves Damage from Water Hammers

Requirement: The LOP and LVP systems' automatic valve operator closure device shall be sufficiently slow to prevent water hammer. [Section 14.4, ORD]

Basis Discussion: None.

Verification: Verification is expected to be achieved through the following:

Verif. Method	Verif. By	Plan	Notes/Comments
R	**ENG**	Review design to verify the valve stroke time conforms to engineering study.	

3.10.4.15 Process Vessels with Heating/Cooling Jackets or Coils

Requirement: The LOP and LVP systems' vessels, which have a heat transfer coil inside, shall provide a coil support system to avoid wear due to thermal cycling. [Section 14.2, ORD]

Basis Discussion: The SCV has a cooling water jacket. The SBS has internal cooling coils and a cooling water jacket.

Verification: Verification is expected to be achieved through the following:

Verif. Method	Verif. By	Plan	Notes/Comments
R	**ENG**	Review design to verify vessels, which have a heat transfer coil inside provide a coil support system to avoid wear due to thermal cycling.	

3.10.4.16 Maintainable Equipment Location

Requirement: The LOP and LVP systems' maintainable equipment components, such as drive motors, shall be located outside of high radiation cave, cell, and bulge areas to the extent practical. [Section 7.1, ORD]

Basis Discussion: None. [ALARA]

Verification: Verification is expected to be achieved through the following:

Verif. Method	Verif. By	Plan	Notes/Comments
R	**ENG**	Review design to verify maintainable equipment is located outside of high radiation cave, cell, and bulge areas to the extent practical.	May be documented in assessment/evaluation report.

3.10.4.17 Isolation of Components/Equipment

Requirement: The LOP and LVP systems shall allow for items and equipment to be periodically locked out and isolated and provide visible indication of the device position. High-energy systems (fluid systems with operating parameters greater than 200°F and [or] 500 pounds per square inch gauge [psig]) shall use the double block and bleed method of isolation for all paths where fluid could cross the work boundary for hands-on maintenance. The

double block and bleed requirement does not apply to relief valves, which require a full port three-way valve configuration for vessels and systems that cannot be easily isolated, or where isolation would have a negative impact on safety or availability. Isolating devices shall be capable of being locked out and shall provide visible indication of the device position required [Section 19.14, ORD]

Basis Discussion: Extra precaution is needed for high energy systems. [ALARA]

Verification: Verification is expected to be achieved through the following:

Verif. Method	Verif. By	Plan	Notes/Comments
R	**ENG**	Review of design to verify any high-energy isolation points are provided with double block and bleed arrangement.	May be documented in an evaluation/assessment report.
R	**ENG**	Review of design to verify components and equipment can be isolated and locked out providing visible indication of the position of the isolating device.	May be documented in an evaluation/assessment report.

3.11 Dangerous Waste Permit (DWP) and Washington Administrative Code (WAC) for the LOP and LVP

The requirements delineated in this section are construction and installation certification requirements and do not include design or operational requirements. These WTP construction certification requirements will document that the WTP Dangerous Waste Management Units have been constructed in accordance with the WTP – Operating Unit Group 10 DWP requirements, Permit Number WA7890008967, Condition III.10.C.2.a and Washington Administrative Code (WAC) 173-303-810(14)(a).

3.11.1 Melters 1 & 2 Film Coolers

3.11.1.1 LOP Melter Film Cooler Construction

Requirement: The Permittees will construct the LAW melter film coolers listed in Permit Tables III.10.H.A and B. (see Table 3-5), as approved/modified pursuant to Permit Condition III.10.H.5, as specified in Permit Condition III.10.H.1 and Operating Unit Group 10, Chapter 4 of this Permit, and Operating Unit Group 10, Appendices 9.1 through 9.15 and 9.17 of this Permit, as approved pursuant to Permit Conditions III.10.H.5.a. through d., and III.10.H.5.f. [Sections III.10.H.1.a.i, III.10.H.1.a.ii, III.10.I.a.i, III.10.I.a.ii, Table III.10.H.A, Chp. 4E, Table 4E-2, DWP]

Table 3-5 LAW Melter Film Coolers Construction

Component Number/Location	Description	Material
LOP-FCLR-00001/L-0112	Melter 1 Primary Film Cooler	Stainless Steel
LOP-FCLR-00002/L-0112	Melter 1 Standby Film Cooler	Stainless Steel
LOP-FCLR-00003/L-0112	Melter 2 Primary Film Cooler	Stainless Steel
LOP-FCLR-00004/L-0112	Melter 2 Standby Film Cooler	Stainless Steel

Basis Discussion: Important containment features are delineated and described in these appendices with some specifics covered by construction requirements identified in this document.

Verification: Construction/installation verification is expected to be achieved through the following:

Verif. Method	Verif. By	Plan	Notes/Comments
R	**ENV**	Review completed independent qualified inspector installation packages.	

3.11.1.2 Handling and Installation Procedures

Requirement: The Permittees must ensure that proper handling procedures are adhered to in order to prevent damage to the LAW melters submerged bed scrubbers during installation. Prior to covering, enclosing, or placing the new LAW melter film coolers or component in use, an independent, qualified, installation inspector or an independent, qualified, registered professional engineer, either of whom is trained and experienced in the proper installation of similar systems or components, must inspect the system for the presence of any of the following items:

- Weld breaks.
- Punctures.
- Scrapes of protective coatings.
- Cracks.
- Corrosion.
- Other structural damage or inadequate construction/installation.

All discrepancies must be remedied before the LAW Vitrification System is covered, enclosed, or placed in use [WAC 173-303-640(3)(c), in accordance with WAC 173-303-680(2) and (3)]. [Section III.10.H.1.a.iv, III.10.I.1.a.iv, DWP]

Basis Discussion: This requirement is derived from the Washington Administrative Code (WAC) Dangerous Waste Regulations at WAC Chapter 173-303, specifically the Tank System regulations in WAC 173-303-680. These regulatory requirements have been incorporated into the Dangerous Waste Permit, WTP- Operating Unit Group 10, WA 7890008967, as permit conditions III.10.H.1.a.iv and III.10.I.1.a.iv.

Verification: Construction/installation verification is expected to be achieved through the following:

Verif. Method	Verif. By	Plan	Notes/Comments
R	**ENV**	Perform a review of the design to verify the material of construction, dimensions and location.	

3.11.1.3 Test for Tightness

Requirement: The Permittees must test for tightness the LAW melter film coolers, prior to being covered, enclosed, or placed into use. If the LAW Vitrification System or components are found not to be tight, all repairs necessary to remedy the leak(s) in the system must be performed prior to the LAW Vitrification System being covered, enclosed, or placed in use [WAC 173-303-640(3)(e), in accordance with WAC 173-303-680(2) and (3)]. [Section III.10.H.1.a.vi, DWP]

Basis Discussion: This requirement is derived from the Washington Administrative Code (WAC) Dangerous Waste Regulations at WAC Chapter 173-303, specifically the Tank System regulations in WAC 173-303-680. These regulatory requirements have been incorporated into the Dangerous Waste Permit, WTP- Operating Unit Group 10, WA 7890008967, as permit condition III.10.H.1.a.vi.

Verification: Construction/installation verification is expected to be achieved through the following:

Verif. Method	Verif. By	Plan	Notes/Comments
R	**ENV**	Review completed independent qualified inspector installation packages.	

3.11.1.4 Support and Protection

Requirement: The Permittees must ensure the LAW melter film coolers are supported and protected against physical damage and excessive stress due to settlement, vibration, expansion, or contraction [WAC 173-303-640(3)(f), in accordance with WAC 173-303-680(2) and (3)]. [Section III.10.H.1.a.vii, DWP]

Basis Discussion: This requirement is derived from the Washington Administrative Code (WAC) Dangerous Waste Regulations at WAC Chapter 173-303, specifically the Tank System regulations in WAC 173-303-680. These regulatory requirements have been incorporated into the Dangerous Waste Permit, WTP- Operating Unit Group 10, WA 7890008967, as permit condition III.10.H.1.a.vii.

Verification: Construction/installation verification is expected to be achieved through the following:

Verif. Method	Verif. By	Plan	Notes/Comments
R	**ENV**	Review completed installation packages and nonconformance reports and construction deficiency reports to confirm the plant was constructed in accordance with the approved designs, plans and specifications.	

3.11.1.5 Corrosion Protection

Requirement: The Permittees must provide the type and degree of corrosion protection recommended by an independent corrosion expert, based on the information provided in Operating Unit Group 10, Appendices 9.9 and 9.11 of this Permit, as approved pursuant to Permit Conditions III.10.H.5.b.i., III.10.H.5.b.iv., III.10.H.5.b.v., III.10.H.5.c.i., III.10.H.5.c.iv., III.10.H.5.c.v., III.10.H.5.d.i., III.10.H.5.d.iv., and III.10.H.5.d.v., or other corrosion protection if Ecology believes other corrosion protection is necessary to ensure the integrity of the LAW melter film coolers during use of the LAW Vitrification System. The installation of a corrosion protection system that is field fabricated must be supervised by an independent corrosion expert to ensure proper installation [WAC 173-303-640(3)(g), in accordance with WAC 173-303-680(2) and (3)]. [Section III.10.H.1.a.viii, DWP]

Basis Discussion: This requirement is derived from the Washington Administrative Code (WAC) Dangerous Waste Regulations at WAC Chapter 173-303, specifically the Tank System regulations in WAC 173-303-680. These regulatory requirements have been incorporated into the Dangerous Waste Permit, WTP- Operating Unit Group 10, WA 7890008967, as permit condition III.10.H.1.a.viii.

This requirement is not applicable to tank systems with components that are not in contact with soil or water.

Verification: Construction/installation verification is expected to be achieved through the following:

Verif. Method	Verif. By	Plan	Notes/Comments
R	**ENV**	Review the independent corrosion engineering report to verify the system meets the recommendations.	

3.11.1.6 Monitors and Instrumentation

Requirement: All process monitors/instruments, as specified in Permit Table III.10.H.F (Table 3-6), as approved/modified pursuant to Permit Condition III.10.H.5., will be equipped with operational alarms to warn of deviation, or imminent deviation from the limits specified in Permit Table III.10.H.F. [Sections III.10.H.1.a.xiii, III.10.I.1.vii, Table III.10.H.F, DWP]

Table 3-6 LAW Vitrification System Waste Feed Cutoff Parameters (RESERVED)

Sub-system Designation	Instrument Tag Number	Parameter Description
RESERVED	RESERVED	RESERVED

Basis Discussion: None.

Verification: Construction/installation verification is expected to be achieved through the following:

Verif. Method	Verif. By	Plan	Notes/Comments
R	**ENV**	Review completed Instrument data sheets to verify instrument installation in accordance with the requirement.	

3.11.1.7 Prevention of Escaping Emissions

Requirement: The melter film coolers is constructed with features that prevent escape of vapors, fumes, or other emissions into the air [WAC 173-303-806(4)(i)(i)(B) and WAC 173-303-640(5)(e), in accordance with WAC 173-303-680]. [Section III.10.H.1.a.xxix, DWP]

Basis Discussion: This requirement is derived from the Washington Administrative Code (WAC) Dangerous Waste Regulations at WAC Chapter 173-303, specifically the Tank System regulations in WAC 173-303-680. These regulatory requirements have been incorporated into the Dangerous Waste Permit, WTP- Operating Unit Group 10, WA 7890008967, as permit condition III.10.H.1.a.xxix.

Verification: Construction/installation verification is expected to be achieved through the following:

Verif. Method	Verif. By	Plan	Notes/Comments
R	**ENV**	Review as-built P&IDs to verify the system has a vapor collection system and has been constructed according to the design.	

3.11.2 LOP Scrubbers

3.11.2.1 Melters Submerged Bed Scrubbers Construction

Requirement: The Permittees will construct the LAW melters submerged bed scrubbers listed in Permit Tables III.10.H.A and B. (see Table 3-7), as approved/modified pursuant to Permit Condition III.10.H.5, as specified in Permit Condition III.10.H.1 and Operating Unit Group 10, Chapter 4 of this Permit, and Operating Unit Group 10, Appendices 9.1 through 9.15 and 9.17 of this Permit, as approved pursuant to Permit Conditions III.10.H.5.a.

through d., and III.10.H.5.f. [Sections III.10.H.1.a.i, III.10.H.1.a.ii, III.10.I.a.i, III.10.I.a.ii, Table III.10.H.A, Chp. 4E, Table 4E-2, DWP]

Table 3-7 Submerged Bed Scrubbers Construction

Component Number/Location	Description	Material	Total Volume (US Gallons)
LOP-SCB-00001/L-0123	Melter 1 Submerged Bed Scrubber	Ceramic Packing/Hastelloy	4,948
LOP-SCB-00002/L-0124	Melter 2 Submerged Bed Scrubber	Ceramic Packing/Hastelloy	4,948

Basis Discussion: Important containment features are delineated and described in these appendices with some specifics covered by construction requirements identified in this document.

Verification: Construction/installation verification is expected to be achieved through the following:

Verif. Method	Verif. By	Plan	Notes/Comments
R	**ENV**	Review completed independent qualified inspector installation packages.	

3.11.2.2 Handling and Installation Procedures

Requirement: The Permittees must ensure that proper handling procedures are adhered to in order to prevent damage to the LAW melters submerged bed scrubbers during installation. Prior to covering, enclosing, or placing the new LAW melters submerged bed scrubbers or component in use, an independent, qualified, installation inspector or an independent, qualified, registered professional engineer, either of whom is trained and experienced in the proper installation of similar systems or components, must inspect the system for the presence of any of the following items:

- Weld breaks.
- Punctures.
- Scrapes of protective coatings.
- Cracks.
- Corrosion.
- Other structural damage or inadequate construction/installation.

All discrepancies must be remedied before the LAW Vitrification System is covered, enclosed, or placed in use [WAC 173-303-640(3)(c), in accordance with WAC 173-303-680(2) and (3)]. [Section III.10.H.1.a.iv, III.10.I.1.a.iv, DWP]

Basis Discussion: This requirement is derived from the Washington Administrative Code (WAC) Dangerous Waste Regulations at WAC Chapter 173-303, specifically the Tank System regulations in WAC 173-303-680. These regulatory requirements have been incorporated into the Dangerous Waste Permit, WTP- Operating Unit Group 10, WA 7890008967, as permit condition III.10.H.1.a.iv and III.10.I.1.a.iv.

Verification: Construction/installation verification is expected to be achieved through the following:

Verif. Method	Verif. By	Plan	Notes/Comments
R	**ENV**	Review completed independent qualified inspector installation packages.	

3.11.2.3 Test for Tightness

Requirement: The Permittees must test for tightness the LAW melters submerged bed scrubbers, prior to being covered, enclosed, or placed into use. If the LAW melters submerged bed scrubbers are found not to be tight, all repairs necessary to remedy the leak(s) in the system must be performed prior to the LAW Vitrification System being covered, enclosed, or placed in use [WAC 173-303-640(3)(e), in accordance with WAC 173-303-680(2) and (3)]. [Section III.10.H.1.a.vi, DWP]

Basis Discussion: This requirement is derived from the Washington Administrative Code (WAC) Dangerous Waste Regulations at WAC Chapter 173-303, specifically the Tank System regulations in WAC 173-303-680. These regulatory requirements have been incorporated into the Dangerous Waste Permit, WTP- Operating Unit Group 10, WA 7890008967, as permit condition Section III.10.H.1.a.vi.

Verification: Construction/installation verification is expected to be achieved through the following:

Verif. Method	Verif. By	Plan	Notes/Comments
R	**ENV**	Review completed installation packages documentation to ensure the tightness testing was completed.	

3.11.2.4 Support and Protection

Requirement: The Permittees must ensure the LAW melters submerged bed scrubbers are supported and protected against physical damage and excessive stress due to settlement, vibration, expansion, or contraction [WAC 173-303-640(3)(f), in accordance with WAC 173-303-680(2) and (3)]. [Section III.10.H.1.a.vii, DWP]

Basis Discussion: This requirement is derived from the Washington Administrative Code (WAC) Dangerous Waste Regulations at WAC Chapter 173-303, specifically the Tank System regulations in WAC 173-303-680. These regulatory requirements have been incorporated into the Dangerous Waste Permit, WTP- Operating Unit Group 10, WA 7890008967, as permit condition III.10.H.1.a.vii.

Verification: Construction/installation verification is expected to be achieved through the following:

Verif. Method	Verif. By	Plan	Notes/Comments
R	**ENV**	Review completed installation packages documentation to ensure the tightness testing was completed.	

3.11.2.5 Corrosion Protection

Requirement: The Permittees must provide the type and degree of corrosion protection recommended by an independent corrosion expert, based on the information provided in Operating Unit Group 10, Appendices 9.9 and 9.11 of this Permit, as approved pursuant to Permit Conditions III.10.H.5.b.i., III.10.H.5.b.iv., III.10.H.5.b.v., III.10.H.5.c.i., III.10.H.5.c.iv., III.10.H.5.c.v., III.10.H.5.d.i., III.10.H.5.d.iv., and III.10.H.5.d.v., or other corrosion protection if Ecology believes other corrosion protection is necessary to ensure the integrity of the LAW melters submerged bed scrubbers during use of the LAW Vitrification System. The installation of a corrosion protection system that is field fabricated must be supervised by an independent corrosion expert to ensure proper installation [WAC 173-303-640(3)(g), in accordance with WAC 173-303-680(2) and (3)]. [Section III.10.H.1.a.viii, DWP]

Basis Discussion: This requirement is derived from the Washington Administrative Code (WAC) Dangerous Waste Regulations at WAC Chapter 173-303, specifically the Tank System regulations in WAC 173-303-680. These regulatory requirements have been incorporated into the Dangerous Waste Permit, WTP- Operating Unit Group 10, WA 7890008967, as permit condition III.10.H.1.a.viii.

This requirement is not applicable to tank systems with components that are not in contact with soil or water.

Verification: Construction/installation verification is expected to be achieved through the following:

Verif. Method	Verif. By	Plan	Notes/Comments
R	**ENV**	Review completed installation packages to verify the requirements corrosion protection are met.	

3.11.2.6 Scrubbers Overflow Prevention Controls

Requirement: The LOP scrubbers shall be constructed with the appropriate instrumentation to allow for the control and prevention of overflow from the tank or containment systems. See Table 3-8 for the overflow instruments. [Section III.10.E.9.e.iv, III.10.H.1.a.xvii, DWP]

Table 3-8 LOP Scrubber Overflow Prevention Controls

Monitoring/Control Parameter	Type of Instrument/Control Device	Instrument/Control Device Tag Number
Melter 1 Scrubber LOP-SCB-00001	Level Transmitters	LT-1063Z LT-1011Z
	Level Indicators	LI-1063Z LI-1011Z
	Level Switch High High	LSHH-1063Z
	Level Switch Low Low	LSLL-1063Z
	Level Alarm High High	LAHH-1063Z
Melter 2 Scrubber LOP-SCB-00002	Level Transmitter	LT-2063Z LT-2011Z
	Level Indicators	LI-2063Z LI-2011Z
	Level Switch High High	LSHH-2063Z
	Level Switch Low Low	LSLL-2063Z
	Level Alarm High High	LAHH-2063Z

Basis Discussion: Table 3-8 is developed from 24590-LAW-PER-J-03-003, *System Logic Description for Low-Activity Waste Facility – LAW Primary Offgas Process (LOP) System*. This requirement is derived from the Washington Administrative Code (WAC) Dangerous Waste Regulations at WAC Chapter 173-303, specifically the Tank System regulations in WAC 173-303-640(5)(b). These regulatory requirements have been incorporated into the Dangerous Waste Permit, WTP- Operating Unit Group 10, WA 7890008967, as permit conditions III.10.E.9.e.iv and III.10.H.1.a.xvii.

Verification: Construction/installation verification is expected to be achieved through the following:

Verif. Method	Verif. By	Plan	Notes/Comments
R	**ENV**	Review the Instrument Data Sheets for the instruments to verify Instruments in Table 3-8.	

3.11.2.7 Monitors and Instrumentation

Requirement: All process monitors/instruments, as specified in Permit Table III.10.H.F (see Table 3-9), as approved/modified pursuant to Permit Condition III.10.H.5., will be equipped with operational alarms to warn of deviation, or imminent deviation from the limits specified in Permit Table III.10.H.F. [Sections III.10.H.1.a.xiii, III.10.I.1.vii, Table III.10.H.F, DWP]

Table 3-9 LAW Vitrification System Waste Feed Cutoff Parameters (RESERVED)

Sub-system Designation	Instrument Tag Number	Parameter Description
RESERVED	RESERVED	RESERVED

Basis Discussion: None.

Verification: Construction/installation verification is expected to be achieved through the following:

Verif. Method	Verif. By	Plan	Notes/Comments
R	**ENV**	Review completed installation packages to verify instrument installation in accordance with the requirement.	

3.11.2.8 Prevention of Escaping Emissions

Requirement: The LOP scrubbers is constructed with features that prevent escape of vapors, fumes, or other emissions into the air [WAC 173-303-806(4)(i)(i)(B) and WAC 173-303-640(5)(e), in accordance with WAC 173-303-680]. [Section III.10.H.1.a.xxix, DWP]

Basis Discussion: This requirement is derived from the Washington Administrative Code (WAC) Dangerous Waste Regulations at WAC Chapter 173-303, specifically the Tank System regulations in WAC 173-303-640. These regulatory requirements have been incorporated into the Dangerous Waste Permit, WTP- Operating Unit Group 10, WA 7890008967, as permit condition III.10.H.1.a.xxix.

Verification: Construction/installation verification is expected to be achieved through the following:

Verif. Method	Verif. By	Plan	Notes/Comments
R	**ENV**	Review as-built P&IDs to verify the system has a vapor collection system and has been constructed according to the design.	

3.11.3 LOP Wet Electrostatic Precipitators

3.11.3.1 Wet Electrostatic Precipitators Construction

Requirement: The Permittees will construct the LAW wet electrostatic precipitators listed in Permit Tables III.10.H.A and B. (see Table 3-10), as approved/modified pursuant to Permit Condition III.10.H.5, as specified in Permit Condition III.10.H.1 and Operating Unit Group 10, Chapter 4 of this Permit, and Operating Unit Group 10, Appendices 9.1 through 9.15 and 9.17 of this Permit, as approved pursuant to Permit Conditions III.10.H.5.a.

through d., and III.10.H.5.f. [Sections III.10.H.1.a.i, III.10.H.1.a.ii, III.10.I.a.i, III.10.I.a.ii, Table III.10.H.A, Chp. 4E, Table 4E-2, DWP]

Table 3-10 Wet Electrostatic Precipitators Construction

Component Number/Location	Description	Material
LOP-WESP-00001/L-0123	Melter 1 Wet Electrostatic Precipitator	6% Molybdenum/ Stainless Steel
LOP-WESP-00002/L-0124	Melter 2 Wet Electrostatic Precipitator	6% Molybdenum/ Stainless Steel

Basis Discussion: Important containment features are delineated and described in these appendices with some specifics covered by construction requirements identified in this document.

Verification: Construction/installation verification is expected to be achieved through the following:

Verif. Method	Verif. By	Plan	Notes/Comments
R	**ENV**	Review completed independent qualified inspector installation packages.	

3.11.3.2 Handling and Installation Procedures

Requirement: The Permittees must ensure that proper handling procedures are adhered to in order to prevent damage to the LAW wet electrostatic precipitators during installation. Prior to covering, enclosing, or placing the new LAW wet electrostatic precipitators in use, an independent, qualified, installation inspector or an independent, qualified, registered professional engineer, either of whom is trained and experienced in the proper installation of similar systems or components, must inspect the system for the presence of any of the following items:

- Weld breaks.
- Punctures.
- Scrapes of protective coatings.
- Cracks.
- Corrosion.
- Other structural damage or inadequate construction/installation.

All discrepancies must be remedied before the LAW Vitrification System is covered, enclosed, or placed in use [WAC 173-303-640(3)(c), in accordance with WAC 173-303-680(2) and (3)]. [Section III.10.H.1.a.iv, III.10.I.1.a.iv, DWP]

Basis Discussion: This requirement is derived from the Washington Administrative Code (WAC) Dangerous Waste Regulations at WAC Chapter 173-303, specifically the Tank System regulations in WAC 173-303-640. These regulatory requirements have been incorporated into the Dangerous Waste Permit, WTP- Operating Unit Group 10, WA 7890008967, as permit condition III.10.I.1.a.iv.

Verification: Construction/installation verification is expected to be achieved through the following:

Verif. Method	Verif. By	Plan	Notes/Comments
R	ENV	Review completed independent qualified inspector installation packages.	

3.11.3.3 Test for Tightness

Requirement: The Permittees must test for tightness the LAW wet electrostatic precipitators, prior to being covered, enclosed, or placed into use. If the LAW wet electrostatic precipitators are found not to be tight, all repairs necessary to remedy the leak(s) in the system must be performed prior to the LAW Vitrification System being covered, enclosed, or placed in use [WAC 173-303-640(3)(e), in accordance with WAC 173-303-680(2) and (3)]. [Section III.10.H.1.a.vi, DWP]

Basis Discussion: This requirement is derived from the Washington Administrative Code (WAC) Dangerous Waste Regulations at WAC Chapter 173-303, specifically the Tank System regulations in WAC 173-303-640. These regulatory requirements have been incorporated into the Dangerous Waste Permit, WTP- Operating Unit Group 10, WA 7890008967, as permit condition III.10.H.1.a.vi.

Verification: Construction/installation verification is expected to be achieved through the following:

Verif. Method	Verif. By	Plan	Notes/Comments
R	ENV	Review completed installation packages documentation to ensure the tightness testing was completed.	

3.11.3.4 Support and Protection

Requirement: The Permittees must ensure the LAW wet electrostatic precipitators are supported and protected against physical damage and excessive stress due to settlement, vibration, expansion, or contraction [WAC 173-303-640(3)(f), in accordance with WAC 173-303-680(2) and (3)]. [Section III.10.H.1.a.vii, DWP]

Basis Discussion: This requirement is derived from the Washington Administrative Code (WAC) Dangerous Waste Regulations at WAC Chapter 173-303, specifically the Tank System regulations in WAC 173-303-640. These regulatory requirements have been incorporated into the Dangerous Waste Permit, WTP- Operating Unit Group 10, WA 7890008967, as permit condition III.10.H.1.a.vii.

Verification: Construction/installation verification is expected to be achieved through the following:

Verif. Method	Verif. By	Plan	Notes/Comments
R	ENV	Review completed installation packages and nonconformance reports and construction deficiency reports to confirm the plant was constructed in accordance with the approved designs, plans and specifications.	

3.11.3.5 Corrosion Protection

Requirement: The Permittees must provide the type and degree of corrosion protection recommended by an independent corrosion expert, based on the information provided in Operating Unit Group 10, Appendices 9.9 and

9.11 of this Permit, as approved pursuant to Permit Conditions III.10.H.5.b.i., III.10.H.5.b.iv., III.10.H.5.b.v., III.10.H.5.c.i., III.10.H.5.c.iv., III.10.H.5.c.v., III.10.H.5.d.i., III.10.H.5.d.iv., and III.10.H.5.d.v., or other corrosion protection if Ecology believes other corrosion protection is necessary to ensure the integrity of the LAW wet electrostatic precipitators during use of the LAW Vitrification System. The installation of a corrosion protection system that is field fabricated must be supervised by an independent corrosion expert to ensure proper installation [WAC 173-303-640(3)(g), in accordance with WAC 173-303-680(2) and (3)]. [Section III.10.H.1.a.viii, DWP]

Basis Discussion: This requirement is derived from the Washington Administrative Code (WAC) Dangerous Waste Regulations at WAC Chapter 173-303, specifically the Tank System regulations in WAC 173-303-640. These regulatory requirements have been incorporated into the Dangerous Waste Permit, WTP- Operating Unit Group 10, WA 7890008967, as permit condition III.10.H.1.a.viii.

This requirement is not applicable to tank systems with components that are not in contact with soil or water.

Verification: Construction/installation verification is expected to be achieved through the following:

Verif. Method	Verif. By	Plan	Notes/Comments
R	**ENV**	Review completed installation packages to verify the requirements corrosion protection are met.	

3.11.3.6 WESP Overflow Prevention Controls

Requirement: The WESPs shall be constructed with the appropriate instrumentation to allow for the control and prevention of overflow from the tank or containment systems. See Table 3-11 for the overflow instruments. [Section III.10.E.9.e.iv, III.10.H.1.a.xvii, DWP]

Table 3-11 WESP Overflow Prevention Controls

Monitoring/Control Parameter	Type of Instrument/ Control Device	Instrument/Control Device Tag Number
Melter 1 WESP LOP-WESP-00001	Level Transmitters	LT-1059Z LT-1060Z
	Level Indicators	LI-1059Z LI-1060Z
	Level Switches High High	LSHH-1059Z LSHH-1060Z
	Level Alarms High High	LAHH-1059Z LAHH-1060Z
Melter 2 WESP LOP-WESP-00002	Level Transmitters	LT-2059Z LT-2060Z
	Level Indicators	LI-2059Z LI-2060Z
	Level Switches High High	LSHH-2059Z LSHH-2060Z
	Level Alarms High High	LAHH-2059Z LAHH-2060Z

Basis Discussion: Table 3-11 is developed from 24590-LAW-PER-J-03-003, *System Logic Description for Low-Activity Waste Facility – LAW Primary Offgas Process (LOP) System*. This requirement is derived from the

Washington Administrative Code (WAC) Dangerous Waste Regulations at WAC Chapter 173-303, specifically the Tank System regulations in WAC 173-303-640(5)(b). These regulatory requirements have been incorporated into the Dangerous Waste Permit, WTP- Operating Unit Group 10, WA 7890008967, as permit conditions III.10.E.9.e.iv and III.10.H.1.a.xvii.

Verification: Construction/installation verification is expected to be achieved through the following:

Verif. Method	Verif. By	Plan	Notes/Comments
R	**ENV**	Review the Instrument Data Sheets for the instruments to verify Instruments in Table 3-11.	

3.11.3.7 Monitors and Instrumentation

Requirement: All process monitors/instruments, as specified in Permit Table III.10.H.F (Table 3-12), as approved/modified pursuant to Permit Condition III.10.H.5, will be equipped with operational alarms to warn of deviation, or imminent deviation from the limits specified in Permit Table III.10.H.F. [Sections III.10.H.1.a.xiii, III.10.I.1.vii, Table III.10.H.F, DWP]

Table 3-12 LAW Vitrification System Waste Feed Cutoff Parameters (RESERVED)

Sub-system Designation	Instrument Tag Number	Parameter Description
RESERVED	RESERVED	RESERVED

Basis Discussion: None.

Verification: Construction/installation verification is expected to be achieved through the following:

Verif. Method	Verif. By	Plan	Notes/Comments
R	**ENV**	Review completed installation packages to verify instrument installation in accordance with the requirement.	

3.11.3.8 Prevention of Escaping Emissions

Requirement: The LAW wet electrostatic precipitators is constructed with features that prevent escape of vapors, fumes, or other emissions into the air [WAC 173-303-806(4)(i)(i)(B) and WAC 173-303-640(5)(e), in accordance with WAC 173-303-680]. [Section III.10.H.1.a.xxix, DWP]

Basis Discussion: This requirement is derived from the Washington Administrative Code (WAC) Dangerous Waste Regulations at WAC Chapter 173-303, specifically the Tank System regulations in WAC 173-303-640. These regulatory requirements have been incorporated into the Dangerous Waste Permit, WTP- Operating Unit Group 10, WA 7890008967, as permit condition III.10.H.1.a.xxix.

Verification: Construction/installation verification is expected to be achieved through the following:

Verif. Method	Verif. By	Plan	Notes/Comments
R	**ENV**	Review as-built P&IDs to verify the system has a vapor collection system and has been constructed according to the design.	

3.11.4 LVP Offgas Mercury Adsorbers

3.11.4.1 Offgas Mercury Adsorber Construction

Requirement: The Permittees will construct the LAW offgas mercury adsorber listed in Permit Tables III.10.H.A and B. (see Table 3-13), as approved/modified pursuant to Permit Condition III.10.H.5, as specified in Permit Condition III.10.H.1 and Operating Unit Group 10, Chapter 4 of this Permit, and Operating Unit Group 10, Appendices 9.1 through 9.15 and 9.17 of this Permit, as approved pursuant to Permit Conditions III.10.H.5.a. through d., and III.10.H.5.f. [Sections III.10.H.1.a.i, III.10.H.1.a.ii, III.10.I.a.i, III.10.I.a.ii, Table III.10.H.A, Chp. 4E, Table 4E-2, DWP]

Table 3-13 Offgas Mercury Adsorber Construction

Component Number/Location	Description	Material
LVP-ADBR-00001A/L-304F (on LVP-SKID-00001)	Offgas Mercury Adsorber	Stainless Steel
LVP-ADBR-00001B/L-304F (on LVP-SKID-00001)	Offgas Mercury Adsorber	Stainless Steel

Basis Discussion: Important containment features are delineated and described in these appendices with some specifics covered by construction requirements identified in this document.

Verification: Construction/installation verification is expected to be achieved through the following:

Verif. Method	Verif. By	Plan	Notes/Comments
R	**ENV**	Review completed independent qualified inspector installation packages.	

3.11.4.2 Handling and Installation Procedures

Requirement: The Permittees must ensure that proper handling procedures are adhered to in order to prevent damage to the LAW offgas mercury adsorber during installation. Prior to covering, enclosing, or placing the new LAW offgas mercury adsorber in use, an independent, qualified, installation inspector or an independent, qualified, registered professional engineer, either of whom is trained and experienced in the proper installation of similar systems or components, must inspect the system for the presence of any of the following items:

- Weld breaks.
- Punctures.
- Scrapes of protective coatings.
- Cracks.
- Corrosion.
- Other structural damage or inadequate construction/installation.

All discrepancies must be remedied before the LAW Vitrification System is covered, enclosed, or placed in use [WAC 173-303-640(3)(c), in accordance with WAC 173-303-680(2) and (3)]. [Section III.10.H.1.a.iv, III.10.I.1.a.iv, DWP]

Basis Discussion: This requirement is derived from the Washington Administrative Code (WAC) Dangerous Waste Regulations at WAC Chapter 173-303, specifically the Tank System regulations in WAC 173-303-640. These regulatory requirements have been incorporated into the Dangerous Waste Permit, WTP- Operating Unit Group 10, WA 7890008967, as permit conditions III.10.H.1.a.iv and III.10.I.1.a.iv.

Verification: Construction/installation verification is expected to be achieved through the following:

Verif. Method	Verif. By	Plan	Notes/Comments
R	**ENV**	Review completed independent qualified inspector installation packages.	

3.11.4.3 Test for Tightness

Requirement: The Permittees must test for tightness the LAW offgas mercury adsorber, prior to being covered, enclosed, or placed into use. If the LAW offgas mercury adsorber are found not to be tight, all repairs necessary to remedy the leak(s) in the system must be performed prior to the LAW Vitrification System being covered, enclosed, or placed in use [WAC 173-303-640(3)(e), in accordance with WAC 173-303-680(2) and (3)]. [Section III.10.H.1.a.vi, DWP]

Basis Discussion: This requirement is derived from the Washington Administrative Code (WAC) Dangerous Waste Regulations at WAC Chapter 173-303, specifically the Tank System regulations in WAC 173-303-640. These regulatory requirements have been incorporated into the Dangerous Waste Permit, WTP- Operating Unit Group 10, WA 7890008967, as permit condition III.10.H.1.a.vi.

Verification: Construction/installation verification is expected to be achieved through the following:

Verif. Method	Verif. By	Plan	Notes/Comments
R	**ENV**	Review completed installation packages documentation to ensure the tightness testing was completed.	

3.11.4.4 Support and Protection

Requirement: The Permittees must ensure the LAW offgas mercury adsorber are supported and protected against physical damage and excessive stress due to settlement, vibration, expansion, or contraction [WAC 173-303-640(3)(f), in accordance with WAC 173-303-680(2) and (3)]. [Section III.10.H.1.a.vii, DWP]

Basis Discussion: This requirement is derived from the Washington Administrative Code (WAC) Dangerous Waste Regulations at WAC Chapter 173-303, specifically the Tank System regulations in WAC 173-303-640. These regulatory requirements have been incorporated into the Dangerous Waste Permit, WTP- Operating Unit Group 10, WA 7890008967, as permit condition III.10.H.1.a.vii.

Verification: Construction/installation verification is expected to be achieved through the following:

Verif. Method	Verif. By	Plan	Notes/Comments
R	**ENV**	Review completed installation packages and nonconformance reports and construction deficiency reports to confirm the plant was constructed in accordance with the approved designs, plans and specifications.	

3.11.4.5 Corrosion Protection

Requirement: The Permittees must provide the type and degree of corrosion protection recommended by an independent corrosion expert, based on the information provided in Operating Unit Group 10, Appendices 9.9 and 9.11 of this Permit, as approved pursuant to Permit Conditions III.10.H.5.b.i., III.10.H.5.b.iv., III.10.H.5.b.v., III.10.H.5.c.i., III.10.H.5.c.iv., III.10.H.5.c.v., III.10.H.5.d.i., III.10.H.5.d.iv., and III.10.H.5.d.v., or other corrosion protection if Ecology believes other corrosion protection is necessary to ensure the integrity of the LAW offgas mercury adsorber during use of the LAW Vitrification System. The installation of a corrosion protection system that is field fabricated must be supervised by an independent corrosion expert to ensure proper installation [WAC 173-303-640(3)(g), in accordance with WAC 173-303-680(2) and (3)]. [Section III.10.H.1.a.viii, DWP]

Basis Discussion: This requirement is derived from the Washington Administrative Code (WAC) Dangerous Waste Regulations at WAC Chapter 173-303, specifically the Tank System regulations in WAC 173-303-640. These regulatory requirements have been incorporated into the Dangerous Waste Permit, WTP- Operating Unit Group 10, WA 7890008967, as permit condition III.10.H.1.a.viii.

This requirement is not applicable to tank systems with components that are not in contact with soil or water.

Verification: Construction/installation verification is expected to be achieved through the following:

Verif. Method	Verif. By	Plan	Notes/Comments
R	**ENV**	Review completed installation packages to verify the requirements corrosion protection are met.	

3.11.4.6 Monitors and Instrumentation

Requirement: All process monitors/instruments, as specified in Permit Table III.10.H.F (Table 3-14), as approved/modified pursuant to Permit Condition III.10.H.5., will be equipped with operational alarms to warn of deviation, or imminent deviation from the limits specified in Permit Table III.10.H.F. [Sections III.10.H.1.a.xiii, III.10.I.1.vii, Table III.10.H.F, DWP]

Table 3-14 LAW Vitrification System Waste Feed Cutoff Parameters (RESERVED)

Sub-system Designation	Instrument Tag Number	Parameter Description
RESERVED	RESERVED	RESERVED

Basis Discussion: None.

Verification: Construction/installation verification is expected to be achieved through the following:

Verif. Method	Verif. By	Plan	Notes/Comments
R	**ENV**	Review completed installation packages to verify instrument installation in accordance with the requirement.	

3.11.4.7 Prevention of Escaping Emissions

Requirement: The LAW offgas mercury adsorber is constructed with features that prevent escape of vapors, fumes, or other emissions into the air [WAC 173-303-806(4)(i)(i)(B) and WAC 173-303-640(5)(e), in accordance with WAC 173-303-680]. [Section III.10.H.1.a.xxix, DWP]

Basis Discussion: This requirement is derived from the Washington Administrative Code (WAC) Dangerous Waste Regulations at WAC Chapter 173-303, specifically the Tank System regulations in WAC 173-303-640. These regulatory requirements have been incorporated into the Dangerous Waste Permit, WTP- Operating Unit Group 10, WA 7890008967, as permit condition III.10.H.1.a.xxix.

Verification: Construction/installation verification is expected to be achieved through the following:

Verif. Method	Verif. By	Plan	Notes/Comments
R	**ENV**	Review as-built P&IDs to verify the system has a vapor collection system and has been constructed according to the design.	

3.11.5 LVP Exhausters

3.11.5.1 Exhausters Construction

Requirement: The Permittees will construct the LVP exhausters listed in Permit Tables III.10.H.A and B. (see Table 3-15), as approved/modified pursuant to Permit Condition III.10.H.5, as specified in Permit Condition III.10.H.1 and Operating Unit Group 10, Chapter 4 of this Permit, and Operating Unit Group 10, Appendices 9.1 through 9.15 and 9.17 of this Permit, as approved pursuant to Permit Conditions III.10.H.5.a. through d., and III.10.H.5.f. [Sections III.10.H.1.a.i, III.10.H.1.a.ii, III.10.I.a.i, III.10.I.a.ii, Table III.10.H.A, Chp. 4E, Table 4E-2, DWP]

Table 3-15 LVP Exhausters Construction

Component Number/Location	Description	Material
LVP-EXHR-00001A/L-0304C	Melter Offgas Exhauster	Stainless Steel
LVP-EXHR-00001B/L-0304D	Melter Offgas Exhauster	Stainless Steel
LVP-EXHR-00001C/L-0304E	Melter Offgas Exhauster	Stainless Steel

Basis Discussion: Important containment features are delineated and described in these appendices with some specifics covered by construction requirements identified in this document.

Verification: Construction/installation verification is expected to be achieved through the following:

Verif. Method	Verif. By	Plan	Notes/Comments
R	**ENV**	Review completed independent qualified inspector installation packages.	

3.11.5.2 Handling and Installation Procedures

Requirement: The Permittees must ensure that proper handling procedures are adhered to in order to prevent damage to the LVP exhausters during installation. Prior to covering, enclosing, or placing the new LVP exhausters in use, an independent, qualified, installation inspector or an independent, qualified, registered professional engineer, either of whom is trained and experienced in the proper installation of similar systems or components, must inspect the system for the presence of any of the following items:

- Weld breaks.
- Punctures.
- Scrapes of protective coatings.
- Cracks.
- Corrosion.
- Other structural damage or inadequate construction/installation.

All discrepancies must be remedied before the LAW Vitrification System is covered, enclosed, or placed in use [WAC 173-303-640(3)(c), in accordance with WAC 173-303-680(2) and (3)]. [Section III.10.H.1.a.iv, III.10.I.1.a.iv, DWP]

Basis Discussion: This requirement is derived from the Washington Administrative Code (WAC) Dangerous Waste Regulations at WAC Chapter 173-303, specifically the Tank System regulations in WAC 173-303-640. These regulatory requirements have been incorporated into the Dangerous Waste Permit, WTP- Operating Unit Group 10, WA 7890008967, as permit conditions III.10.H.1.a.iv and III.10.I.1.a.iv.

Verification: Construction/installation verification is expected to be achieved through the following:

Verif. Method	Verif. By	Plan	Notes/Comments
R	**ENV**	Review completed independent qualified inspector installation packages.	

3.11.5.3 Test for Tightness

Requirement: The Permittees must test for tightness the LVP exhausters, prior to being covered, enclosed, or placed into use. If the LVP exhausters are found not to be tight, all repairs necessary to remedy the leak(s) in the system must be performed prior to the LAW Vitrification System being covered, enclosed, or placed in use [WAC 173-303-640(3)(e), in accordance with WAC 173-303-680(2) and (3)]. [Section III.10.H.1.a.vi, DWP]

Basis Discussion: This requirement is derived from the Washington Administrative Code (WAC) Dangerous Waste Regulations at WAC Chapter 173-303, specifically the Tank System regulations in WAC 173-303-640. These regulatory requirements have been incorporated into the Dangerous Waste Permit, WTP- Operating Unit Group 10, WA 7890008967, as permit condition III.10.H.1.a.vi.

Verification: Construction/installation verification is expected to be achieved through the following:

Verif. Method	Verif. By	Plan	Notes/Comments
R	**ENV**	Review completed installation packages documentation to ensure the tightness testing was completed.	

3.11.5.4 Support and Protection

Requirement: The Permittees must ensure the LVP exhausters are supported and protected against physical damage and excessive stress due to settlement, vibration, expansion, or contraction [WAC 173-303-640(3)(f), in accordance with WAC 173-303-680(2) and (3)]. [Section III.10.H.1.a.vii, DWP]

Basis Discussion: This requirement is derived from the Washington Administrative Code (WAC) Dangerous Waste Regulations at WAC Chapter 173-303, specifically the Tank System regulations in WAC 173-303-640. These regulatory requirements have been incorporated into the Dangerous Waste Permit, WTP- Operating Unit Group 10, WA 7890008967, as permit condition III.10.H.1.a.vii.

Verification: Construction/installation verification is expected to be achieved through the following:

Verif. Method	Verif. By	Plan	Notes/Comments
R	**ENV**	Review completed installation packages and nonconformance reports and construction deficiency reports to confirm the plant was constructed in accordance with the approved designs, plans and specifications.	

3.11.5.5 Corrosion Protection

Requirement: The Permittees must provide the type and degree of corrosion protection recommended by an independent corrosion expert, based on the information provided in Operating Unit Group 10, Appendices 9.9 and 9.11 of this Permit, as approved pursuant to Permit Conditions III.10.H.5.b.i., III.10.H.5.b.iv., III.10.H.5.b.v., III.10.H.5.c.i., III.10.H.5.c.iv., III.10.H.5.c.v., III.10.H.5.d.i., III.10.H.5.d.iv., and III.10.H.5.d.v., or other corrosion protection if Ecology believes other corrosion protection is necessary to ensure the integrity of the LVP exhausters during use of the LAW Vitrification System. The installation of a corrosion protection system that is field fabricated must be supervised by an independent corrosion expert to ensure proper installation [WAC 173-303-640(3)(g), in accordance with WAC 173-303-680(2) and (3)]. [Section III.10.H.1.a.viii, DWP]

Basis Discussion: This requirement is derived from the Washington Administrative Code (WAC) Dangerous Waste Regulations at WAC Chapter 173-303, specifically the Tank System regulations in WAC 173-303-640. These regulatory requirements have been incorporated into the Dangerous Waste Permit, WTP- Operating Unit Group 10, WA 7890008967, as permit condition III.10.H.1.a.viii.

This requirement is not applicable to tank systems with components that are not in contact with soil or water.

Verification: Construction/installation verification is expected to be achieved through the following:

Verif. Method	Verif. By	Plan	Notes/Comments
R	**ENV**	Review completed installation packages to verify the requirements corrosion protection are met.	

3.11.5.6 Monitors and Instrumentation

Requirement: All process monitors/instruments, as specified in Permit Table III.10.H.F (Table 3-16), as approved/modified pursuant to Permit Condition III.10.H.5., will be equipped with operational alarms to warn of deviation, or imminent deviation from the limits specified in Permit Table III.10.H.F. [Sections III.10.H.1.a.xiii, III.10.I.1.vii, Table III.10.H.F, DWP]

Table 3-16 LAW Vitrification System Waste Feed Cutoff Parameters (RESERVED)

Sub-system Designation	Instrument Tag Number	Parameter Description
RESERVED	RESERVED	RESERVED

Basis Discussion: None.

Verification: Construction/installation verification is expected to be achieved through the following:

Verif. Method	Verif. By	Plan	Notes/Comments
R	**ENV**	Review completed installation packages to verify instrument installation in accordance with the requirement.	

3.11.5.7 Prevention of Escaping Emissions

Requirement: The LVP exhausters is constructed with features that prevent escape of vapors, fumes, or other emissions into the air [WAC 173-303-806(4)(i)(i)(B) and WAC 173-303-640(5)(e), in accordance with WAC 173-303-680]. [Section III.10.H.1.a.xxix, DWP]

Basis Discussion: This requirement is derived from the Washington Administrative Code (WAC) Dangerous Waste Regulations at WAC Chapter 173-303, specifically the Tank System regulations in WAC 173-303-640. These regulatory requirements have been incorporated into the Dangerous Waste Permit, WTP- Operating Unit Group 10, WA 7890008967, as permit condition III.10.H.1.a.xxix.

Verification: Construction/installation verification is expected to be achieved through the following:

Verif. Method	Verif. By	Plan	Notes/Comments
R	**ENV**	Review as-built P&IDs to verify the system has a vapor collection system and has been constructed according to the design.	

3.11.6 LVP HEPA Filters

3.11.6.1 HEPA Filters Construction

Requirement: The Permittees will construct the LVP HEPA filters listed in Permit Tables III.10.H.A. (see Table 3-17), as approved/modified pursuant to Permit Condition III.10.H.5, as specified in Permit Condition III.10.H.1 and Operating Unit Group 10, Chapter 4 of this Permit, and Operating Unit Group 10, Appendices 9.1 through 9.15 and 9.17 of this Permit, as approved pursuant to Permit Conditions III.10.H.5.a. through d., and III.10.H.5.f. [Sections III.10.H.1.a.i, III.10.H.1.a.ii, III.10.I.a.i, III.10.I.a.ii, Table III.10.H.A, Chp. 4E, Table 4E-2, DWP]

Table 3-17 LVP HEPA Filters Construction

Component Number/Location	Description	Material
LVP-HEPA-00001A/L-0304H	Melter Offgas HEPA Filter	Synthetic Fibrous Materials/Stainless Steel
LVP-HEPA-00001B/L-0304H	Melter Offgas HEPA Filter	Synthetic Fibrous Materials/Stainless Steel
LVP-HEPA-00002A/L-0304H	Melter Offgas HEPA Filter	Synthetic Fibrous Materials/Stainless Steel
LVP-HEPA-00002B/L-0304H	Melter Offgas HEPA Filter	Synthetic Fibrous Materials/Stainless Steel
LVP-HEPA-00003A/L-0304H	Melter Offgas HEPA Filter	Synthetic Fibrous Materials/Stainless Steel

Basis Discussion: Important containment features are delineated and described in these appendices with some specifics covered by construction requirements identified in this document.

Verification: Construction/installation verification is expected to be achieved through the following:

Verif. Method	Verif. By	Plan	Notes/Comments
R	**ENV**	Review completed independent qualified inspector installation packages.	

3.11.6.2 Handling and Installation Procedures

Requirement: The Permittees must ensure that proper handling procedures are adhered to in order to prevent damage to the LVP HEPA filters during installation. Prior to covering, enclosing, or placing the new LVP HEPA filters in use, an independent, qualified, installation inspector or an independent, qualified, registered professional engineer, either of whom is trained and experienced in the proper installation of similar systems or components, must inspect the system for the presence of any of the following items:

- Weld breaks.
- Punctures.
- Scrapes of protective coatings.
- Cracks.
- Corrosion.
- Other structural damage or inadequate construction/installation.

All discrepancies must be remedied before the LAW Vitrification System is covered, enclosed, or placed in use [WAC 173-303-640(3)(c), in accordance with WAC 173-303-680(2) and (3)]. [Section III.10.H.1.a.iv, III.10.I.1.a.iv, DWP]

Basis Discussion: This requirement is derived from the Washington Administrative Code (WAC) Dangerous Waste Regulations at WAC Chapter 173-303, specifically the Tank System regulations in WAC 173-303-640. These regulatory requirements have been incorporated into the Dangerous Waste Permit, WTP- Operating Unit Group 10, WA 7890008967, as permit conditions III.10.H.1.a.iv and III.10.I.1.a.iv.

Verification: Construction/installation verification is expected to be achieved through the following:

Verif. Method	Verif. By	Plan	Notes/Comments
R	**ENV**	Review completed independent qualified inspector installation packages.	

3.11.6.3 Test for Tightness

Requirement: The Permittees must test for tightness the LVP HEPA filters, prior to being covered, enclosed, or placed into use. If the LVP HEPA filters are found not to be tight, all repairs necessary to remedy the leak(s) in the system must be performed prior to the LAW Vitrification System being covered, enclosed, or placed in use [WAC 173-303-640(3)(e), in accordance with WAC 173-303-680(2) and (3)]. [Section III.10.H.1.a.vi, DWP]

Basis Discussion: This requirement is derived from the Washington Administrative Code (WAC) Dangerous Waste Regulations at WAC Chapter 173-303, specifically the Tank System regulations in WAC 173-303-640. These regulatory requirements have been incorporated into the Dangerous Waste Permit, WTP- Operating Unit Group 10, WA 7890008967, as permit condition III.10.H.1.a.vi.

Verification: Construction/installation verification is expected to be achieved through the following:

Verif. Method	Verif. By	Plan	Notes/Comments
R	**ENV**	Review completed installation packages documentation to ensure the tightness testing was completed.	

3.11.6.4 Support and Protection

Requirement: The Permittees must ensure the LVP HEPA filters are supported and protected against physical damage and excessive stress due to settlement, vibration, expansion, or contraction [WAC 173-303-640(3)(f), in accordance with WAC 173-303-680(2) and (3)]. [Section III.10.H.1.a.vii, DWP]

Basis Discussion: This requirement is derived from the Washington Administrative Code (WAC) Dangerous Waste Regulations at WAC Chapter 173-303, specifically the Tank System regulations in WAC 173-303-640. These regulatory requirements have been incorporated into the Dangerous Waste Permit, WTP- Operating Unit Group 10, WA 7890008967, as permit condition III.10.H.1.a.vii.

Verification: Construction/installation verification is expected to be achieved through the following:

Verif. Method	Verif. By	Plan	Notes/Comments
R	**ENV**	Review completed installation packages and nonconformance reports and construction deficiency reports to confirm the plant was constructed in accordance with the approved designs, plans and specifications.	

3.11.6.5 Corrosion Protection

Requirement: The Permittees must provide the type and degree of corrosion protection recommended by an independent corrosion expert, based on the information provided in Operating Unit Group 10, Appendices 9.9 and 9.11 of this Permit, as approved pursuant to Permit Conditions III.10.H.5.b.i., III.10.H.5.b.iv., III.10.H.5.b.v., III.10.H.5.c.i., III.10.H.5.c.iv., III.10.H.5.c.v., III.10.H.5.d.i., III.10.H.5.d.iv., and III.10.H.5.d.v., or other corrosion protection if Ecology believes other corrosion protection is necessary to ensure the integrity of the LVP HEPA filters during use of the LAW Vitrification System. The installation of a corrosion protection system that is field fabricated must be supervised by an independent corrosion expert to ensure proper installation [WAC 173-303-640(3)(g), in accordance with WAC 173-303-680(2) and (3)]. [Section III.10.H.1.a.viii, DWP]

Basis Discussion: This requirement is derived from the Washington Administrative Code (WAC) Dangerous Waste Regulations at WAC Chapter 173-303, specifically the Tank System regulations in WAC 173-303-640. These regulatory requirements have been incorporated into the Dangerous Waste Permit, WTP- Operating Unit Group 10, WA 7890008967, as permit condition III.10.H.1.a.viii.

This requirement is not applicable to tank systems with components that are not in contact with soil or water.

Verification: Construction/installation verification is expected to be achieved through the following:

Verif. Method	Verif. By	Plan	Notes/Comments
R	**ENV**	Review completed installation packages to verify the requirements corrosion protection are met.	

3.11.6.6 Monitors and Instrumentation

Requirement: All process monitors/instruments, as specified in Permit Table III.10.H.F (Table 3-18), as approved/modified pursuant to Permit Condition III.10.H.5., will be equipped with operational alarms to warn of deviation, or imminent deviation from the limits specified in Permit Table III.10.H.F. [Sections III.10.H.1.a.xiii, III.10.I.1.vii, Table III.10.H.F, DWP]

Table 3-18 LAW Vitrification System Waste Feed Cutoff Parameters (RESERVED)

Sub-system Designation	Instrument Tag Number	Parameter Description
RESERVED	RESERVED	RESERVED

Basis Discussion: None.

Verification: Construction/installation verification is expected to be achieved through the following:

Verif. Method	Verif. By	Plan	Notes/Comments
R	**ENV**	Review completed installation packages to verify instrument installation in accordance with the requirement.	

3.11.6.7 Prevention of Escaping Emissions

Requirement: The LVP HEPA filters is constructed with features that prevent escape of vapors, fumes, or other emissions into the air [WAC 173-303-806(4)(i)(i)(B) and WAC 173-303-640(5)(e), in accordance with WAC 173-303-680]. [Section III.10.H.1.a.xxix, DWP]

Basis Discussion: This requirement is derived from the Washington Administrative Code (WAC) Dangerous Waste Regulations at WAC Chapter 173-303, specifically the Tank System regulations in WAC 173-303-640. These regulatory requirements have been incorporated into the Dangerous Waste Permit, WTP- Operating Unit Group 10, WA 7890008967, as permit condition III.10.H.1.a.xxix.

Verification: Construction/installation verification is expected to be achieved through the following:

Verif. Method	Verif. By	Plan	Notes/Comments
R	**ENV**	Review as-built P&IDs to verify the system has a vapor collection system and has been constructed according to the design.	

3.11.7 LVP HEPA Preheaters

3.11.7.1 Preheaters Construction

Requirement: The Permittees will construct the LVP HEPA preaheaters listed in Permit Tables III.10.H.A and B. (see Table 3-19), as approved/modified pursuant to Permit Condition III.10.H.5, as specified in Permit Condition III.10.H.1 and Operating Unit Group 10, Chapter 4 of this Permit, and Operating Unit Group 10, Appendices 9.1 through 9.15 and 9.17 of this Permit, as approved pursuant to Permit Conditions III.10.H.5.a. through d., and III.10.H.5.f. [Sections III.10.H.1.a.i, III.10.H.1.a.ii, III.10.I.a.i, III.10.I.a.ii, Table III.10.H.A, Chp. 4E, Table 4E-2, DWP]

Table 3-19 LVP HEPA Preheaters Construction

Component Number/Location	Description	Material
LVP-HTR-00001A/L-0304H	Melter Offgas HEPA Preheater	Stainless Steel/Incoloy 800
LVP-HTR-00001B/L-0304H	Melter Offgas HEPA Preheater	Stainless Steel/Incoloy 800

Basis Discussion: Important containment features are delineated and described in these appendices with some specifics covered by construction requirements identified in this document.

Verification: Construction/installation verification is expected to be achieved through the following:

Verif. Method	Verif. By	Plan	Notes/Comments
R	**ENV**	Review completed independent qualified inspector installation packages.	

3.11.7.2 Handling and Installation Procedures

Requirement: The Permittees must ensure that proper handling procedures are adhered to in order to prevent damage to the LVP heaters during installation. Prior to covering, enclosing, or placing the new LVP HEPA

Preheaters in use, an independent, qualified, installation inspector or an independent, qualified, registered professional engineer, either of whom is trained and experienced in the proper installation of similar systems or components, must inspect the system for the presence of any of the following items:

- Weld breaks.
- Punctures.
- Scrapes of protective coatings.
- Cracks.
- Corrosion.
- Other structural damage or inadequate construction/installation.

All discrepancies must be remedied before the LAW Vitrification System is covered, enclosed, or placed in use [WAC 173-303-640(3)(c), in accordance with WAC 173-303-680(2) and (3)]. [Section III.10.H.1.a.iv, III.10.I.1.a.iv, DWP]

Basis Discussion: This requirement is derived from the Washington Administrative Code (WAC) Dangerous Waste Regulations at WAC Chapter 173-303, specifically the Tank System regulations in WAC 173-303-640. These regulatory requirements have been incorporated into the Dangerous Waste Permit, WTP- Operating Unit Group 10, WA 7890008967, as permit conditions III.10.H.1.a.iv and III.10.I.1.a.iv.

Verification: Construction/installation verification is expected to be achieved through the following:

Verif. Method	Verif. By	Plan	Notes/Comments
R	**ENV**	Review completed independent qualified inspector installation packages.	

3.11.7.3 Test for Tightness

Requirement: The Permittees must test for tightness the LVP HEPA Preheaters, prior to being covered, enclosed, or placed into use. If the LVP heaters are found not to be tight, all repairs necessary to remedy the leak(s) in the system must be performed prior to the LAW Vitrification System being covered, enclosed, or placed in use [WAC 173-303-640(3)(e), in accordance with WAC 173-303-680(2) and (3)]. [Section III.10.H.1.a.vi, DWP]

Basis Discussion: This requirement is derived from the Washington Administrative Code (WAC) Dangerous Waste Regulations at WAC Chapter 173-303, specifically the Tank System regulations in WAC 173-303-640. These regulatory requirements have been incorporated into the Dangerous Waste Permit, WTP- Operating Unit Group 10, WA 7890008967, as permit condition III.10.H.1.a.vi.

Verification: Construction/installation verification is expected to be achieved through the following:

Verif. Method	Verif. By	Plan	Notes/Comments
R	**ENV**	Review completed installation packages documentation to ensure the tightness testing was completed.	

3.11.7.4 Support and Protection

Requirement: The Permittees must ensure the LVP HEPA Preheaters are supported and protected against physical damage and excessive stress due to settlement, vibration, expansion, or contraction [WAC 173-303-640(3)(f), in accordance with WAC 173-303-680(2) and (3)]. [Section III.10.H.1.a.vii, DWP]

Basis Discussion: This requirement is derived from the Washington Administrative Code (WAC) Dangerous Waste Regulations at WAC Chapter 173-303, specifically the Tank System regulations in WAC 173-303-640. These regulatory requirements have been incorporated into the Dangerous Waste Permit, WTP- Operating Unit Group 10, WA 7890008967, as permit condition III.10.H.1.a.vii.

Verification: Construction/installation verification is expected to be achieved through the following:

Verif. Method	Verif. By	Plan	Notes/Comments
R	**ENV**	Review completed installation packages and nonconformance reports and construction deficiency reports to confirm the plant was constructed in accordance with the approved designs, plans and specifications.	

3.11.7.5 Corrosion Protection

Requirement: The Permittees must provide the type and degree of corrosion protection recommended by an independent corrosion expert, based on the information provided in Operating Unit Group 10, Appendices 9.9 and 9.11 of this Permit, as approved pursuant to Permit Conditions III.10.H.5.b.i., III.10.H.5.b.iv., III.10.H.5.b.v., III.10.H.5.c.i., III.10.H.5.c.iv., III.10.H.5.c.v., III.10.H.5.d.i., III.10.H.5.d.iv., and III.10.H.5.d.v., or other corrosion protection if Ecology believes other corrosion protection is necessary to ensure the integrity of the LVP HEPA Preheaters during use of the LAW Vitrification System. The installation of a corrosion protection system that is field fabricated must be supervised by an independent corrosion expert to ensure proper installation [WAC 173-303-640(3)(g), in accordance with WAC 173-303-680(2) and (3)]. [Section III.10.H.1.a.viii, DWP]

Basis Discussion: This requirement is derived from the Washington Administrative Code (WAC) Dangerous Waste Regulations at WAC Chapter 173-303, specifically the Tank System regulations in WAC 173-303-640. These regulatory requirements have been incorporated into the Dangerous Waste Permit, WTP- Operating Unit Group 10, WA 7890008967, as permit condition III.10.H.1.a.viii.

This requirement is not applicable to tank systems with components that are not in contact with soil or water.

Verification: Construction/installation verification is expected to be achieved through the following:

Verif. Method	Verif. By	Plan	Notes/Comments
R	**ENV**	Review completed installation packages to verify the requirements corrosion protection are met.	

3.11.7.6 Monitors and Instrumentation

Requirement: All process monitors/instruments, as specified in Permit Table III.10.H.F (Table 3-20), as approved/modified pursuant to Permit Condition III.10.H.5., will be equipped with operational alarms to warn of deviation, or imminent deviation from the limits specified in Permit Table III.10.H.F. [Sections III.10.H.1.a.xiii, III.10.I.1.vii, Table III.10.H.F, DWP]

Table 3-20 LAW Vitrification System Waste Feed Cutoff Parameters (RESERVED)

Sub-system Designation	Instrument Tag Number	Parameter Description
RESERVED	RESERVED	RESERVED

Basis Discussion: None.

Verification: Construction/installation verification is expected to be achieved through the following:

Verif. Method	Verif. By	Plan	Notes/Comments
R	**ENV**	Review completed installation packages to verify instrument installation in accordance with the requirement.	

3.11.7.7 Prevention of Escaping Emissions

Requirement: The LVP HEPA preheaters is constructed with features that prevent escape of vapors, fumes, or other emissions into the air [WAC 173-303-806(4)(i)(i)(B) and WAC 173-303-640(5)(e), in accordance with WAC 173-303-680]. [Section III.10.H.1.a.xxix, DWP]

Basis Discussion: This requirement is derived from the Washington Administrative Code (WAC) Dangerous Waste Regulations at WAC Chapter 173-303, specifically the Tank System regulations in WAC 173-303-640. These regulatory requirements have been incorporated into the Dangerous Waste Permit, WTP- Operating Unit Group 10, WA 7890008967, as permit condition III.10.H.1.a.xxix.

Verification: Construction/installation verification is expected to be achieved through the following:

Verif. Method	Verif. By	Plan	Notes/Comments
R	**ENV**	Review as-built P&IDs to verify the system has a vapor collection system and has been constructed according to the design.	

3.11.8 LVP Scrubber (Caustic-Offgas Submerged Bed)

3.11.8.1 Offgas Caustic Scrubber Construction

Requirement: The Permittees will construct the LVP offgas caustic scrubber listed in Permit Tables III.10.H.A and B. (see Table 3-21), as approved/modified pursuant to Permit Condition III.10.H.5, as specified in Permit Condition III.10.H.1 and Operating Unit Group 10, Chapter 4 of this Permit, and Operating Unit Group 10, Appendices 9.1 through 9.15 and 9.17 of this Permit, as approved pursuant to Permit Conditions III.10.H.5.a. through d., and III.10.H.5.f. [Sections III.10.H.1.a.i, III.10.H.1.a.ii, III.10.I.a.i, III.10.I.a.ii, Table III.10.H.A, Chp. 4E, Table 4E-2, DWP]

Table 3-21 LVP Offgas Caustic Scrubber Construction

Component Number/Location	Description	Material	Total Volume (US Gallons)
LVP-SCB-00001/ L-0304F	Melter Offgas Caustic Scrubber	Hastelloy/Metal Intalox Packing/Stainless Steel	TBD

Basis Discussion: Important containment features are delineated and described in these appendices with some specifics covered by construction requirements identified in this document.

Verification: Construction/installation verification is expected to be achieved through the following:

Verif. Method	Verif. By	Plan	Notes/Comments
R	**ENV**	Perform a permitted facility document review of DMWU system to verify construction and installation is in compliance with the permitted design.	

3.11.8.2 Handling and Installation Procedures

Requirement: The Permittees must ensure that proper handling procedures are adhered to in order to prevent damage to the LVP offgas caustic scrubber during installation. Prior to covering, enclosing, or placing the new LVP scrubber in use, an independent, qualified, installation inspector or an independent, qualified, registered professional engineer, either of whom is trained and experienced in the proper installation of similar systems or components, must inspect the system for the presence of any of the following items:

- Weld breaks.
- Punctures.
- Scrapes of protective coatings.
- Cracks.
- Corrosion.
- Other structural damage or inadequate construction/installation.

All discrepancies must be remedied before the LAW Vitrification System is covered, enclosed, or placed in use [WAC 173-303-640(3)(c), in accordance with WAC 173-303-680(2) and (3)]. [Section III.10.H.1.a.iv, III.10.I.1.a.iv, DWP]

Basis Discussion: This requirement is derived from the Washington Administrative Code (WAC) Dangerous Waste Regulations at WAC Chapter 173-303, specifically the Tank System regulations in WAC 173-303-640. These regulatory requirements have been incorporated into the Dangerous Waste Permit, WTP- Operating Unit Group 10, WA 7890008967, as permit conditions III.10.H.1.a.iv and III.10.I.1.a.iv.

Verification: Construction/installation verification is expected to be achieved through the following:

Verif. Method	Verif. By	Plan	Notes/Comments
R	**ENV**	Review completed independent qualified inspector installation packages.	

3.11.8.3 Test for Tightness

Requirement: The Permittees must test for tightness the LVP offgas caustic scrubber, prior to being covered, enclosed, or placed into use. If the LVP scrubber are found not to be tight, all repairs necessary to remedy the leak(s) in the system must be performed prior to the LAW Vitrification System being covered, enclosed, or placed in use [WAC 173-303-640(3)(e), in accordance with WAC 173-303-680(2) and (3)]. [Section III.10.H.1.a.vi, DWP]

Basis Discussion: This requirement is derived from the Washington Administrative Code (WAC) Dangerous Waste Regulations at WAC Chapter 173-303, specifically the Tank System regulations in WAC 173-303-640.

These regulatory requirements have been incorporated into the Dangerous Waste Permit, WTP- Operating Unit Group 10, WA 7890008967, as permit condition III.10.H.1.a.vi.

Verification: Construction/installation verification is expected to be achieved through the following:

Verif. Method	Verif. By	Plan	Notes/Comments
R	**ENV**	Review completed installation packages documentation to ensure the tightness testing was completed.	

3.11.8.4 Support and Protection

Requirement: The Permittees must ensure the LVP offgas caustic scrubber are supported and protected against physical damage and excessive stress due to settlement, vibration, expansion, or contraction [WAC 173-303-640(3)(f), in accordance with WAC 173-303-680(2) and (3)]. [Section III.10.H.1.a.vii, DWP]

Basis Discussion: This requirement is derived from the Washington Administrative Code (WAC) Dangerous Waste Regulations at WAC Chapter 173-303, specifically the Tank System regulations in WAC 173-303-640. These regulatory requirements have been incorporated into the Dangerous Waste Permit, WTP- Operating Unit Group 10, WA 7890008967, as permit condition III.10.H.1.a.vii.

Verification: Construction/installation verification is expected to be achieved through the following:

Verif. Method	Verif. By	Plan	Notes/Comments
R	**ENV**	Review completed installation packages and nonconformance reports and construction deficiency reports to confirm the plant was constructed in accordance with the approved designs, plans and specifications.	

3.11.8.5 LVP Offgas Caustic Scrubber Overflow Prevention Control

Requirement: The LVP offgas caustic scrubber shall be constructed with the appropriate instrumentation to allow for the control and prevention of overflow from the tank or containment systems. See Table 3-22 for the overflow instruments. [Section III.10.E.9.e.iv, DWP]

Table 3-22 LVP Offgas Caustic Scrubber Overflow Prevention Controls

Monitoring/Control Parameter	Type of Instrument/ Control Device	Instrument/Control Device Tag Number
LVP Offgas Caustic Scrubber LVP-SCB-00001	Level Transmitters	LT-0090
	Level Indicators	LI-0090
	Level Switch High High	LSHH-0090
	Level Alarm High High	LAHH-0090

Basis Discussion: Table 3-22 is developed from 24590-LAW-PER-J-04-0002, *System Logic Description for Low-Activity Waste Facility – LAW Secondary Offgas Process (LVP) System*. This requirement is derived from the Washington Administrative Code (WAC) Dangerous Waste Regulations at WAC Chapter 173-303,

specifically the Tank System regulations in WAC 173-303-640(5)(b). These regulatory requirements have been incorporated into the Dangerous Waste Permit, WTP- Operating Unit Group 10, WA 7890008967, as permit condition III.10.E.9.e.iv.

Verification: Construction/installation verification is expected to be achieved through the following:

Verif. Method	Verif. By	Plan	Notes/Comments
R	**ENV**	Review the Instrument Data Sheets for the instruments to verify Instruments in Table 3-22.	

3.11.8.6 Corrosion Protection

Requirement: The Permittees must provide the type and degree of corrosion protection recommended by an independent corrosion expert, based on the information provided in Operating Unit Group 10, Appendices 9.9 and 9.11 of this Permit, as approved pursuant to Permit Conditions III.10.H.5.b.i., III.10.H.5.b.iv., III.10.H.5.b.v., III.10.H.5.c.i., III.10.H.5.c.iv., III.10.H.5.c.v., III.10.H.5.d.i., III.10.H.5.d.iv., and III.10.H.5.d.v., or other corrosion protection if Ecology believes other corrosion protection is necessary to ensure the integrity of the LVP offgas caustic scrubber during use of the LAW Vitrification System. The installation of a corrosion protection system that is field fabricated must be supervised by an independent corrosion expert to ensure proper installation [WAC 173-303-640(3)(g), in accordance with WAC 173-303-680(2) and (3)]. [Section III.10.H.1.a.viii, DWP]

Basis Discussion: This requirement is derived from the Washington Administrative Code (WAC) Dangerous Waste Regulations at WAC Chapter 173-303, specifically the Tank System regulations in WAC 173-303-640. These regulatory requirements have been incorporated into the Dangerous Waste Permit, WTP- Operating Unit Group 10, WA 7890008967, as permit condition III.10.H.1.a.viii.

This requirement is not applicable to tank systems with components that are not in contact with soil or water.

Verification: Construction/installation verification is expected to be achieved through the following:

Verif. Method	Verif. By	Plan	Notes/Comments
R	**ENV**	Review completed installation packages to verify the requirements corrosion protection are met.	

3.11.8.7 Monitors and Instrumentation

Requirement: All process monitors/instruments, as specified in Permit Table III.10.H.F (Table 3-23), as approved/modified pursuant to Permit Condition III.10.H.5., will be equipped with operational alarms to warn of deviation, or imminent deviation from the limits specified in Permit Table III.10.H.F. [Sections III.10.H.1.a.xiii, III.10.I.1.vii, Table III.10.H.F, DWP]

Table 3-23 LAW Vitrification System Waste Feed Cutoff Parameters (RESERVED)

Sub-system Designation	Instrument Tag Number	Parameter Description
RESERVED	RESERVED	RESERVED

Basis Discussion: None.

Verification: Construction/installation verification is expected to be achieved through the following:

Verif. Method	Verif. By	Plan	Notes/Comments
R	**ENV**	Review completed installation packages to verify instrument installation in accordance with the requirement.	

3.11.8.8 Prevention of Escaping Emissions

Requirement: The LVP offgas Caustic scrubber is constructed with features that prevent escape of vapors, fumes, or other emissions into the air [WAC 173-303-806(4)(i)(i)(B) and WAC 173-303-640(5)(e), in accordance with WAC 173-303-680]. [Section III.10.H.1.a.xxix, DWP]

Basis Discussion: This requirement is derived from the Washington Administrative Code (WAC) Dangerous Waste Regulations at WAC Chapter 173-303, specifically the Tank System regulations in WAC 173-303-640. These regulatory requirements have been incorporated into the Dangerous Waste Permit, WTP- Operating Unit Group 10, WA 7890008967, as permit condition III.10.H.1.a.xxix.

Verification: Construction/installation verification is expected to be achieved through the following:

Verif. Method	Verif. By	Plan	Notes/Comments
R	**ENV**	Review as-built P&IDs to verify the system has a vapor collection system and has been constructed according to the design.	

3.11.9 LVP Selective Catalytic Oxididation Unit

3.11.9.1 Selective Catalytic Oxidiation Construction

Requirement: The Permittees will construct the LVP selective catalytic oxidizer listed in Permit Tables III.10.H.A and B. (see Table 3-24), as approved/modified pursuant to Permit Condition III.10.H.5, as specified in Permit Condition III.10.H.1 and Operating Unit Group 10, Chapter 4 of this Permit, and Operating Unit Group 10, Appendices 9.1 through 9.15 and 9.17 of this Permit, as approved pursuant to Permit Conditions III.10.H.5.a. through d., and III.10.H.5.f. [Sections III.10.H.1.a.i, III.10.H.1.a.ii, III.10.I.a.i, III.10.I.a.ii, Table III.10.H.A, Chp. 4E, Table 4E-2, DWP]

Table 3-24 Selective Catalytic Oxidizer Construction

Component Number/Location	Description	Material
LVP-SCO-00001/ L-0304F (on LVP-SKID-00002)	Thermal Catalytic Oxidizer	Stainless Steel

Basis Discussion: Important containment features are delineated and described in these appendices with some specifics covered by construction requirements identified in this document.

Verification: Construction/installation verification is expected to be achieved through the following:

Verif. Method	Verif. By	Plan	Notes/Comments
R	**ENV**	Perform a permitted facility document review of DMWU system to verify construction and installation is in compliance with the permitted design.	

3.11.9.2 Handling and Installation Procedures

Requirement: The Permittees must ensure that proper handling procedures are adhered to in order to prevent damage to the LVP selective catalytic oxidizer during installation. Prior to covering, enclosing, or placing the new LVP selective catalytic oxidizer in use, an independent, qualified, installation inspector or an independent, qualified, registered professional engineer, either of whom is trained and experienced in the proper installation of similar systems or components, must inspect the system for the presence of any of the following items:

- Weld breaks.
- Punctures.
- Scrapes of protective coatings.
- Cracks.
- Corrosion.
- Other structural damage or inadequate construction/installation.

All discrepancies must be remedied before the LAW Vitrification System is covered, enclosed, or placed in use [WAC 173-303-640(3)(c), in accordance with WAC 173-303-680(2) and (3)]. [Section III.10.H.1.a.iv, III.10.I.1.a.iv, DWP]

Basis Discussion: This requirement is derived from the Washington Administrative Code (WAC) Dangerous Waste Regulations at WAC Chapter 173-303, specifically the Tank System regulations in WAC 173-303-640. These regulatory requirements have been incorporated into the Dangerous Waste Permit, WTP- Operating Unit Group 10, WA 7890008967, as permit conditions III.10.H.1.a.iv and III.10.I.1.a.iv.

Verification: Construction/installation verification is expected to be achieved through the following:

Verif. Method	Verif. By	Plan	Notes/Comments
R	**ENV**	Review completed independent qualified inspector installation packages.	

3.11.9.3 Test for Tightness

Requirement: The Permittees must test for tightness the LVP selective catalytic oxidizer, prior to being covered, enclosed, or placed into use. If the LVP selective catalytic oxidizer are found not to be tight, all repairs necessary to remedy the leak(s) in the system must be performed prior to the LAW Vitrification System being covered, enclosed, or placed in use [WAC 173-303-640(3)(e), in accordance with WAC 173-303-680(2) and (3)]. [Section III.10.H.1.a.vi, DWP]

Basis Discussion: This requirement is derived from the Washington Administrative Code (WAC) Dangerous Waste Regulations at WAC Chapter 173-303, specifically the Tank System regulations in WAC 173-303-640. These regulatory requirements have been incorporated into the Dangerous Waste Permit, WTP- Operating Unit Group 10, WA 7890008967, as permit condition III.10.H.1.a.vi.

Verification: Construction/installation verification is expected to be achieved through the following:

Verif. Method	Verif. By	Plan	Notes/Comments
R	**ENV**	Review completed installation packages documentation to ensure the tightness testing was completed.	

3.11.9.4 Support and Protection

Requirement: The Permittees must ensure the LVP selective catalytic oxidizer are supported and protected against physical damage and excessive stress due to settlement, vibration, expansion, or contraction [WAC 173-303-640(3)(f), in accordance with WAC 173-303-680(2) and (3)]. [Section III.10.H.1.a.vii, DWP]

Basis Discussion: This requirement is derived from the Washington Administrative Code (WAC) Dangerous Waste Regulations at WAC Chapter 173-303, specifically the Tank System regulations in WAC 173-303-640. These regulatory requirements have been incorporated into the Dangerous Waste Permit, WTP- Operating Unit Group 10, WA 7890008967, as permit condition III.10.H.1.a.vii.

Verification: Construction/installation verification is expected to be achieved through the following:

Verif. Method	Verif. By	Plan	Notes/Comments
R	**ENV**	Review completed installation packages and nonconformance reports and construction deficiency reports to confirm the plant was constructed in accordance with the approved designs, plans and specifications.	

3.11.9.5 Corrosion Protection

Requirement: The Permittees must provide the type and degree of corrosion protection recommended by an independent corrosion expert, based on the information provided in Operating Unit Group 10, Appendices 9.9 and 9.11 of this Permit, as approved pursuant to Permit Conditions III.10.H.5.b.i., III.10.H.5.b.iv., III.10.H.5.b.v., III.10.H.5.c.i., III.10.H.5.c.iv., III.10.H.5.c.v., III.10.H.5.d.i., III.10.H.5.d.iv., and III.10.H.5.d.v., or other corrosion protection if Ecology believes other corrosion protection is necessary to ensure the integrity of the LVP selective catalytic oxidizer during use of the LAW Vitrification System. The installation of a corrosion protection system that is field fabricated must be supervised by an independent corrosion expert to ensure proper installation [WAC 173-303-640(3)(g), in accordance with WAC 173-303-680(2) and (3)]. [Section III.10.H.1.a.viii, DWP]

Basis Discussion: This requirement is derived from the Washington Administrative Code (WAC) Dangerous Waste Regulations at WAC Chapter 173-303, specifically the Tank System regulations in WAC 173-303-640. These regulatory requirements have been incorporated into the Dangerous Waste Permit, WTP- Operating Unit Group 10, WA 7890008967, as permit condition III.10.H.1.a.viii.

This requirement is not applicable to tank systems with components that are not in contact with soil or water.

Verification: Construction/installation verification is expected to be achieved through the following:

Verif. Method	Verif. By	Plan	Notes/Comments
R	**ENV**	Review completed installation packages to verify the requirements corrosion protection are met.	

3.11.9.6 Monitors and Instrumentation

Requirement: All process monitors/instruments, as specified in Permit Table III.10.H.F (Table 3-25), as approved/modified pursuant to Permit Condition III.10.H.5., will be equipped with operational alarms to warn of deviation, or imminent deviation from the limits specified in Permit Table III.10.H.F. [Sections III.10.H.1.a.xiii, III.10.I.1.vii, Table III.10.H.F, DWP]

Table 3-25 LAW Vitrification System Waste Feed Cutoff Parameters (RESERVED)

Sub-system Designation	Instrument Tag Number	Parameter Description
RESERVED	RESERVED	RESERVED

Basis Discussion: None.

Verification: Construction/installation verification is expected to be achieved through the following:

Verif. Method	Verif. By	Plan	Notes/Comments
R	**ENV**	Review completed installation packages to verify instrument installation in accordance with the requirement.	

3.11.9.7 Prevention of Escaping Emissions

Requirement: The LVP selective catalytic oxidizer is constructed with features that prevent escape of vapors, fumes, or other emissions into the air [WAC 173-303-806(4)(i)(i)(B) and WAC 173-303-640(5)(e), in accordance with WAC 173-303-680]. [Section III.10.H.1.a.xxix, DWP]

Basis Discussion: This requirement is derived from the Washington Administrative Code (WAC) Dangerous Waste Regulations at WAC Chapter 173-303, specifically the Tank System regulations in WAC 173-303-640. These regulatory requirements have been incorporated into the Dangerous Waste Permit, WTP- Operating Unit Group 10, WA 7890008967, as permit condition III.10.H.1.a.xxix.

Verification: Construction/installation verification is expected to be achieved through the following:

Verif. Method	Verif. By	Plan	Notes/Comments
R	**ENV**	Review as-built P&IDs to verify the system has a vapor collection system and has been constructed according to the design.	

3.11.10 LVP Selective Catalytic Reduction Unit

3.11.10.1 LVP Selective Catalytic Reduction Unit Construction

Requirement: The Permittees will construct the LVP selective catalytic reduction unit listed in Permit Tables III.10.H.A and B. (see Table 3-26), as approved/modified pursuant to Permit Condition III.10.H.5, as specified in Permit Condition III.10.H.1 and Operating Unit Group 10, Chapter 4 of this Permit, and Operating Unit Group 10, Appendices 9.1 through 9.15 and 9.17 of this Permit, as approved pursuant to Permit Conditions III.10.H.5.a. through d., and III.10.H.5.f. [Sections III.10.H.1.a.i, III.10.H.1.a.ii, III.10.I.a.i, III.10.I.a.ii, Table III.10.H.A, Chp. 4E, Table 4E-2, DWP]

Table 3-26 Selective Catalytic Reduction Unit Construction

Component Number/Location	Description	Material
LVP-SCR-00001/L-0304F (on LVP-SKID-00002)	NO_x Selective Catalytic Reduction Unit	Stainless Steel
LVP-HTR-00002/L-0304F (on LVP-SKID-00002)	Catalytic Oxidizer Electric Heater	Stainless Steel
LVP-HX-00001/L-0304F (on LVP-SKID-00002)	Catalytic Oxidizer Heat Recovery Unit	Stainless Steel

Basis Discussion: Important containment features are delineated and described in these appendices with some specifics covered by construction requirements identified in this document.

Verification: Construction/installation verification is expected to be achieved through the following:

Verif. Method	Verif. By	Plan	Notes/Comments
R	**ENV**	Perform a permitted facility document review of DMWU system to verify construction and installation is in compliance with the permitted design.	

3.11.10.2 Handling and Installation Procedures

Requirement: The Permittees must ensure that proper handling procedures are adhered to in order to prevent damage to the LVP selective catalytic reduction unit during installation. Prior to covering, enclosing, or placing the new LVP selective catalytic reduction unit use, an independent, qualified, installation inspector or an independent, qualified, registered professional engineer, either of whom is trained and experienced in the proper installation of similar systems or components, must inspect the system for the presence of any of the following items:

- Weld breaks.
- Punctures.
- Scrapes of protective coatings.
- Cracks.
- Corrosion.
- Other structural damage or inadequate construction/installation.

All discrepancies must be remedied before the LAW Vitrification System is covered, enclosed, or placed in use [WAC 173-303-640(3)(c), in accordance with WAC 173-303-680(2) and (3)]. [Section III.10.H.1.a.iv, III.10.I.1.a.iv, DWP]

Basis Discussion: This requirement is derived from the Washington Administrative Code (WAC) Dangerous Waste Regulations at WAC Chapter 173-303, specifically the Tank System regulations in WAC 173-303-640. These regulatory requirements have been incorporated into the Dangerous Waste Permit, WTP- Operating Unit Group 10, WA 7890008967, as permit conditions III.10.H.1.a.iv and III.10.I.1.a.iv.

Verification: Construction/installation verification is expected to be achieved through the following:

Verif. Method	Verif. By	Plan	Notes/Comments
R	**ENV**	Review completed independent qualified inspector installation packages.	

3.11.10.3 Test for Tightness

Requirement: The Permittees must test for tightness the LVP selective catalytic reduction unit, prior to being covered, enclosed, or placed into use. If the LVP selective catalytic reduction unit are found not to be tight, all repairs necessary to remedy the leak(s) in the system must be performed prior to the LAW Vitrification System being covered, enclosed, or placed in use [WAC 173-303-640(3)(e), in accordance with WAC 173-303-680(2) and (3)]. [Section III.10.H.1.a.vi, DWP]

Basis Discussion: This requirement is derived from the Washington Administrative Code (WAC) Dangerous Waste Regulations at WAC Chapter 173-303, specifically the Tank System regulations in WAC 173-303-640. These regulatory requirements have been incorporated into the Dangerous Waste Permit, WTP- Operating Unit Group 10, WA 7890008967, as permit condition III.10.H.1.a.vi.

Verification: Construction/installation verification is expected to be achieved through the following:

Verif. Method	Verif. By	Plan	Notes/Comments
R	**ENV**	Review completed installation packages documentation to ensure the tightness testing was completed.	

3.11.10.4 Support and Protection

Requirement: The Permittees must ensure the LVP selective catalytic reduction unit are supported and protected against physical damage and excessive stress due to settlement, vibration, expansion, or contraction [WAC 173-303-640(3)(f), in accordance with WAC 173-303-680(2) and (3)]. [Section III.10.H.1.a.vii, DWP]

Basis Discussion: This requirement is derived from the Washington Administrative Code (WAC) Dangerous Waste Regulations at WAC Chapter 173-303, specifically the Tank System regulations in WAC 173-303-640. These regulatory requirements have been incorporated into the Dangerous Waste Permit, WTP- Operating Unit Group 10, WA 7890008967, as permit condition III.10.H.1.a.vii.

Verification: Construction/installation verification is expected to be achieved through the following:

Verif. Method	Verif. By	Plan	Notes/Comments
R	**ENV**	Review completed installation packages and nonconformance reports and construction deficiency reports to confirm the plant was constructed in	

Verif. Method	Verif. By	Plan	Notes/Comments
		accordance with the approved designs, plans and specifications.	

3.11.10.5 Corrosion Protection

Requirement: The Permittees must provide the type and degree of corrosion protection recommended by an independent corrosion expert, based on the information provided in Operating Unit Group 10, Appendices 9.9 and 9.11 of this Permit, as approved pursuant to Permit Conditions III.10.H.5.b.i., III.10.H.5.b.iv., III.10.H.5.b.v., III.10.H.5.c.i., III.10.H.5.c.iv., III.10.H.5.c.v., III.10.H.5.d.i., III.10.H.5.d.iv., and III.10.H.5.d.v., or other corrosion protection if Ecology believes other corrosion protection is necessary to ensure the integrity of the LVP selective catalytic reduction unit during use of the LAW Vitrification System. The installation of a corrosion protection system that is field fabricated must be supervised by an independent corrosion expert to ensure proper installation [WAC 173-303-640(3)(g), in accordance with WAC 173-303-680(2) and (3)]. [Section III.10.H.1.a.viii, DWP]

Basis Discussion: This requirement is derived from the Washington Administrative Code (WAC) Dangerous Waste Regulations at WAC Chapter 173-303, specifically the Tank System regulations in WAC 173-303-640. These regulatory requirements have been incorporated into the Dangerous Waste Permit, WTP- Operating Unit Group 10, WA 7890008967, as permit condition III.10.H.1.a.viii.

This requirement is not applicable to tank systems with components that are not in contact with soil or water.

Verification: Construction/installation verification is expected to be achieved through the following:

Verif. Method	Verif. By	Plan	Notes/Comments
R	**ENV**	Review completed installation packages to verify the requirements corrosion protection are met.	

3.11.10.6 Monitors and Instrumentation

Requirement: All process monitors/instruments, as specified in Permit Table III.10.H.F (Table 3-27), as approved/modified pursuant to Permit Condition III.10.H.5., will be equipped with operational alarms to warn of deviation, or imminent deviation from the limits specified in Permit Table III.10.H.F. [Sections III.10.H.1.a.xiii, III.10.I.1.vii, Table III.10.H.F, DWP]

Table 3-27 LAW Vitrification System Waste Feed Cutoff Parameters (RESERVED)

Sub-system Designation	Instrument Tag Number	Parameter Description
RESERVED	RESERVED	RESERVED

Basis Discussion: None.

Verification: Construction/installation verification is expected to be achieved through the following:

Verif. Method	Verif. By	Plan	Notes/Comments
R	**ENV**	Review completed installation packages to verify instrument installation in accordance with the requirement.	

3.11.10.7 Prevention of Escaping Emissions

Requirement: The LVP selective catalytic reduction is constructed with features that prevent escape of vapors, fumes, or other emissions into the air [WAC 173-303-806(4)(i)(i)(B) and WAC 173-303-640(5)(e), in accordance with WAC 173-303-680]. [Section III.10.H.1.a.xxix, DWP]

Basis Discussion: This requirement is derived from the Washington Administrative Code (WAC) Dangerous Waste Regulations at WAC Chapter 173-303, specifically the Tank System regulations in WAC 173-303-640. These regulatory requirements have been incorporated into the Dangerous Waste Permit, WTP- Operating Unit Group 10, WA 7890008967, as permit condition III.10.H.1.a.xxix.

Verification: Construction/installation verification is expected to be achieved through the following:

Verif. Method	Verif. By	Plan	Notes/Comments
R	**ENV**	Review as-built P&IDs to verify the system has a vapor collection system and has been constructed according to the design.	

3.11.11 LOP/LVP Vessels

3.11.11.1 LAW Melter 1 LOP SBS Condensate Vessel (LOP-VSL-00001)

3.11.11.1.1 Vessels Handling and Installation Procedures

Requirement: The installation of the LOP-VSL-00001 shall be performed with proper handling procedures to prevent damage to the system during installation. Prior to covering, enclosing, or placing the LOP-VSL-00001 system or component, an independent, qualified installation inspector or an independent, qualified, registered professional engineer, either of whom is trained and experience in the proper installation of tank systems or components, must inspect the system as specified in WAC 173-303-640 (3)(c), WAC 173-303-640 (3)(h):

- Specify and document the handling or installation procedures to protect the integrity of the tank system. The procedures should prevent or detect the following defects:
    - weld breaks (WAC 173-303-640 (3)(c)(i))
    - punctures (WAC 173-303-640 (3)(c)(ii))
    - scrapes of protective coatings (WAC 173-303-640 (3)(c)(iii))
    - cracks (WAC 173-303-640 (3)(c)(iv))
    - corrosion (WAC 173-303-640 (3)(c)(v))
    - other structural damage or inadequate construction or installation (WAC 173-303-640(3)(c)(vi))
- Specify and document the remedies for any handling or installation procedure discrepancies identified before the tank system is covered, enclosed, or placed in use. (WAC 173-303-640(3)(c))

[Section III.10.E.3.a, Chp. 4.0, Section 4.2.5, DWP]

Basis Discussion: This requirement is derived from the Washington Administrative Code (WAC) Dangerous Waste Regulations at WAC Chapter 173-303, specifically the Tank System regulations in WAC 173-303-640. These regulatory requirements have been incorporated into the Dangerous Waste Permit, WTP- Operating Unit Group 10, WA 7890008967, as permit condition III.10.E.3.a (WAC 173-303-640(3)(c), WAC 173-303-640(3)(h)).

Verification: Construction/installation verification is expected to be achieved through the following:

Verif. Method	Verif. By	Plan	Notes/Comments
R	**ENV**	Review completed independent qualified inspector installation packages.	

3.11.11.1.2 Vessel System Installation Inspection

Requirement: The independent tank system installation inspection and subsequent written statements will be certified pursuant to Permit Condition III.10.E.1.d., comply with all requirements of WAC 173-303-640(3)(h) and will consider, but not be limited to, the following tank system installation documentation:

- Field installation report with date of installation;
- Approved welding procedures;
- Welder qualifications and certification;
- Hydro-test reports, as applicable, in accordance with the American Society of Mechanical Engineers Boiler and Pressure Vessel Code, Section VIII, Division 1, American Petroleum Institute (API) Standard 620, or Standard 650 as applicable;
- Tester credentials;
- Field inspector credentials;
- Field inspector reports;
- Field waiver reports; and
- Non-compliance reports and corrective action (including field waiver reports) and repair reports.

[Section III.10.E.3.g, DWP]

Basis Discussion: None.

Verification: Construction/installation verification is expected to be achieved through the following:

Verif. Method	Verif. By	Plan	Notes/Comments
R	**ENV**	Review completed installation packages for compliance documentation.	

3.11.11.1.3 Vapor Collection System

Requirement: The LOP-VSL-00001 tank system is constructed with features that prevent escape of vapors, fumes, or other emissions into the air. [Section III.10.E.9.c.xii, DWP]

Basis Discussion: This requirement is derived from the Washington Administrative Code (WAC) Dangerous Waste Regulations at WAC Chapter 173-303, specifically the Tank System regulations in WAC 173-303-640.

These regulatory requirements have been incorporated into the Dangerous Waste Permit, WTP- Operating Unit Group 10, WA 7890008967, as permit condition III.10.E.9.c.xii (WAC 173-303-640(5)(e)).

Verification: Construction/installation verification is expected to be achieved through the following:

Verif. Method	Verif. By	Plan	Notes/Comments
R	**ENV**	Review tank system as-built P&IDs to verify the system has a vapor collection system and has been constructed according to the design.	

3.11.11.1.4 Vessel Construction

Requirement: The LOP-VSL-00001 construction and location shall be in accordance with the locations dimensions, capacities, material and appurtenances as shown the DWP permitted design as shown in Table 3-28. [Chp. 04, Table 4E-1, DWP]

Table 3-28 LAW Melter 1 SBS Condensate Vessel

Vessel Number/Location	Description	Material	Total Volume (US Gallons)	Approximate Dimensions Inside Diameter x Height or Length in feed and inches (tangent line/tangent line)
LOP-VSL-00001/ L-0124	Law Melter 1 SBS Condensate Vessel	Hastelloy	9,056	12 ft x 8 ft 2 in.

Basis Discussion: Locations, dimensions, capacities, material and appurtenances is provided in DWP Tables 4E-1.

Verification: Construction/installation verification is expected to be achieved through the following:

Verif. Method	Verif. By	Plan	Notes/Comments
R	**ENV**	Perform a review of the manufacturers data sheet to verify the material of construction and dimensions.	

3.11.11.1.5 Tightness Testing

Requirement: The Permittees must test for tightness for the LOP-VSL-00001 system prior to these components being covered, enclosed, or placed into use. If a tank system is found not to be tight, all repairs necessary to remedy the leak(s) in the system must be performed prior to the tank system being covered, enclosed, or placed in use. [Section III.10.E.3.c, DWP]

Basis Discussion: This requirement is derived from the Washington Administrative Code (WAC) Dangerous Waste Regulations at WAC Chapter 173-303, specifically the Tank System regulations in WAC 173-303-640. These regulatory requirements have been incorporated into the Dangerous Waste Permit, WTP- Operating Unit Group 10, WA 7890008967, as permit condition III.10.E.3.c.

Verification: Construction/installation verification is expected to be achieved through the following:

Verif. Method	Verif. By	Plan	Notes/Comments
R	**ENV**	Review completed installation packages documentation to ensure the tightness testing was completed.	

3.11.11.1.6 LOP Melter 1 SBS Condensate Vessel Overflow Prevention Controls

Requirement: The melter 1 SBS condensate vessel shall be constructed with the appropriate instrumentation to allow for the control and prevention of overflow from the tank or containment systems. See Table 3-29 for the overflow instruments. [Section III.10.E.5.d, III.10.H.1.a.xvii, DWP]

Table 3-29 Melter 1 Condensate Vessel Overflow Prevention Controls

Monitoring/Control Parameter	Type of Instrument/Control Device	Instrument/Control Device Tag Number
Melter 1 SBS Condensate Vessel LOP-VSL-00001	Level Transmitter	LT-1018
	Level Indicators	LI-1018 LI-1018A
	Level Relay	LY-1018
	Level Switch High High	LSHH-1018
	Level Switch Low Low	LSLL-1018
	Level Alarm High High	LAHH-1018
	Level Alarm Low Low	LALL-1018

Basis Discussion: Table 3-29 is developed from 24590-LAW-PER-J-03-003, *System Logic Description for Low-Activity Waste Facility – LAW Primary Offgas Process (LOP) System*. This requirement is derived from the Washington Administrative Code (WAC) Dangerous Waste Regulations at WAC Chapter 173-303, specifically the Tank System regulations in WAC 173-303-640(5)(b). These regulatory requirements have been incorporated into the Dangerous Waste Permit, WTP- Operating Unit Group 10, WA 7890008967, as permit conditions III.10.E.5.d and III.10.H.1.a.xvii.

Verification: Construction/installation verification is expected to be achieved through the following:

Verif. Method	Verif. By	Plan	Notes/Comments
R	**ENV**	Review the Instrument Data Sheets for the instruments to verify Instruments in Table 3-29.	

3.11.11.1.7 Corrosion Protection

Requirement: The Permittees must provide the type and degree of corrosion protection for LOP-VSL-00001 recommended by an independent corrosion expert, based on the information provided in Operating Unit Group 10, Appendix 9.9, and 9.11 of this Permit, as approved pursuant to Permit Conditions III.10.E.9.b.i., III.10.E.9.b.iv., III.10.E.9.b.v., III.10.E.9.c.i., III.10.E.9.c.iv., III.10.E.9.c.v., III.10.E.9.d.i., III.10.E.9.d.iv., and III.10.E.9.d.v. or other corrosion protection if the Ecology believes other corrosion protection is necessary to ensure the integrity of the tank system during use of the tank system. The installation of a corrosion protection system that is field fabricated must be supervised by an independent corrosion expert to ensure proper installation. [Section III.10.E.3.e, DWP]

Basis Discussion: This requirement is derived from the Washington Administrative Code (WAC) Dangerous Waste Regulations at WAC Chapter 173-303, specifically the Tank System regulations in WAC 173-303-640.

These regulatory requirements have been incorporated into the Dangerous Waste Permit, WTP- Operating Unit Group 10, WA 7890008967, as permit condition III.10.E.3.e.

This requirement is not applicable to tank systems with components that are not in contact with soil or water.

Verification: Construction/installation verification is expected to be achieved through the following:

Verif. Method	Verif. By	Plan	Notes/Comments
R	**ENV**	Review completed installation packages to verify the requirements corrosion protection are met.	

3.11.11.1.8 Ancillary Equipment

Requirement: LOP-VSL-00001 ancillary equipment shall be supported and protected against physical damage and excessive stress due to settlement, vibration, expansion, or contraction [WAC 173-303-640(3)(f)]. [Section III.10.E.3.d, DWP]

Basis Discussion: This requirement is derived from the Washington Administrative Code (WAC) Dangerous Waste Regulations at WAC Chapter 173-303, specifically the Tank System regulations in WAC 173-303-640. These regulatory requirements have been incorporated into the Dangerous Waste Permit, WTP- Operating Unit Group 10, WA 7890008967, as permit condition III.10.E.3.d.

Verification: Construction/installation verification is expected to be achieved through the following:

Verif. Method	Verif. By	Plan	Notes/Comments
R	**ENV**	Review completed installation packages and nonconformance reports and construction deficiency reports to confirm the plant was constructed in accordance with the approved designs, plans and specifications.	

3.11.11.2 LAW Melter 2 LOP SBS Condensate Vessel (LOP-VSL-00002)

3.11.11.2.1 Vessels Handling and Installation

Requirement: The installation of the LOP-VSL-00002 permitted vessels shall be performed with proper handling procedures to prevent damage to the system during installation. Prior to covering, enclosing, or placing the LOP-VSL-00002 system or component, an independent, qualified installation inspector or an independent, qualified, registered professional engineer, either of whom is trained and experience in the proper installation of tank systems or components, must inspect the system as specified in WAC 173-303-640 (3)(c), WAC 173-303-640 (3)(h)

- Specify and document the handling or installation procedures to protect the integrity of the tank system. The procedures should prevent or detect the following defects:
    - weld breaks (WAC 173-303-640 (3)(c)(i))
    - punctures (WAC 173-303-640 (3)(c)(ii))
    - scrapes of protective coatings (WAC 173-303-640 (3)(c)(iii))
    - cracks (WAC 173-303-640 (3)(c)(iv))

  - corrosion (WAC 173-303-640 (3)(c)(v))
  - other structural damage or inadequate construction or installation (WAC 173-303-640(3)(c)(vi))

- Specify and document the remedies for any handling or installation procedure discrepancies identified before the tank system is covered, enclosed, or placed in use. (WAC 173-303-640(3)(c))

[Section III.10.E.3.a, Chp. 4.0, Section 4.2.5, DWP]

Basis Discussion: This requirement is derived from the Washington Administrative Code (WAC) Dangerous Waste Regulations at WAC Chapter 173-303, specifically the Tank System regulations in WAC 173-303-640. These regulatory requirements have been incorporated into the Dangerous Waste Permit, WTP- Operating Unit Group 10, WA 7890008967, as permit condition III.10.E.3.a (WAC 173-303-640(3)(c), WAC 173-303-640(3)(h)).

Verification: Construction/installation verification is expected to be achieved through the following:

Verif. Method	Verif. By	Plan	Notes/Comments
R	**ENV**	Review completed independent qualified inspector installation packages.	

3.11.11.2.2 Vessel System Installation Inspection

Requirement: The independent tank system installation inspection and subsequent written statements will be certified pursuant to Permit Condition III.10.E.1.d., comply with all requirements of WAC 173-303-640(3)(h) and will consider, but not be limited to, the following tank system installation documentation:

- Field installation report with date of installation;
- Approved welding procedures;
- Welder qualifications and certification;
- Hydro-test reports, as applicable, in accordance with the American Society of Mechanical Engineers Boiler and Pressure Vessel Code, Section VIII, Division 1, American Petroleum Institute (API) Standard 620, or Standard 650 as applicable;
- Tester credentials;
- Field inspector credentials;
- Field inspector reports;
- Field waiver reports; and
- Non-compliance reports and corrective action (including field waiver reports) and repair reports.

[Section III.10.E.3.g, DWP]

Basis Discussion: None.

Verification: Construction/installation verification is expected to be achieved through the following:

Verif. Method	Verif. By	Plan	Notes/Comments
R	**ENV**	Review completed installation packages for compliance documentation.	

3.11.11.2.3 Vapor Collection System

Requirement: The LAW LOP-VSL-00002 tank system is constructed with features that prevent escape of vapors, fumes, or other emissions into the air. [Section III.10.E.9.c.xii, DWP]

Basis Discussion: This requirement is derived from the Washington Administrative Code (WAC) Dangerous Waste Regulations at WAC Chapter 173-303, specifically the Tank System regulations in WAC 173-303-640. These regulatory requirements have been incorporated into the Dangerous Waste Permit, WTP- Operating Unit Group 10, WA 7890008967, as permit condition III.10.E.9.c.xii (WAC 173-303-640(5)(e)).

Verification: Construction/installation verification is expected to be achieved through the following:

Verif. Method	Verif. By	Plan	Notes/Comments
R	**ENV**	Review tank system as-built P&IDs to verify the system has a vapor collection system and has been constructed according to the design.	

3.11.11.2.4 Vessel Construction

Requirement: The LOP-VSL-00002 construction and location shall be in accordance with the locations dimensions, capacities, material and appurtenances as shown the DWP permitted design as shown in Table 3-30. [Chp. 04, Table 4E-1, DWP]

Table 3-30 LAW Melter 2 SBS Condensate Vessel

Vessel Number/Location	Description	Material	Total Volume (US Gallons)	Approximate Dimensions Inside Diameter x Height or Length in feed and inches (tangent line/tangent line)
LOP-VSL-00002 L-0123	LAW Melter 2 SBS Condensate Vessel	Hastelloy	9,056	12 ft x 8 ft 2 in.

Basis Discussion: Locations, dimensions, capacities, material and appurtenances is provided in DWP Tables 4E-1.

Verification: Construction/installation verification is expected to be achieved through the following:

Verif. Method	Verif. By	Plan	Notes/Comments
R	**ENV**	Perform a review of the manufacturers data sheet to verify the material of construction and dimensions.	

3.11.11.2.5 Tightness Testing

Requirement: The Permittees must test for tightness for the LOP-VSL-00002 system prior to these components being covered, enclosed, or placed into use. If a tank system is found not to be tight, all repairs necessary to remedy the leak(s) in the system must be performed prior to the tank system being covered, enclosed, or placed in use. [Section III.10.E.3.c, DWP]

Basis Discussion: This requirement is derived from the Washington Administrative Code (WAC) Dangerous Waste Regulations at WAC Chapter 173-303, specifically the Tank System regulations in WAC 173-303-640.

These regulatory requirements have been incorporated into the Dangerous Waste Permit, WTP- Operating Unit Group 10, WA 7890008967, as permit condition III.10.E.3.c.

Verification: Construction/installation verification is expected to be achieved through the following:

Verif. Method	Verif. By	Plan	Notes/Comments
R	**ENV**	Review completed installation packages documentation to ensure the tightness testing was completed.	

3.11.11.2.6 Melter 2 SBS Condensate Overflow Prevention Controls

Requirement: The melter 2 SBS condensate vessel shall be constructed with the appropriate instrumentation to allow for the control and prevention of overflow from the tank or containment systems. See Table 3-31 for the overflow instruments. [Sections III.10.E.9.e.iv, III.10.H.1.a.xvii, DWP]

Table 3-31 Melter 2 SBS Condensate Vessel Prevention Controls

Monitoring/Control Parameter	Type of Instrument/ Control Device	Instrument/Control Device Tag Number
Melter 2 SBS Condensate Vessel LOP-VSL-00002	Level Transmitter	LT-2018
	Level Indicators	LI-2018 LI-2018A
	Level Relay	LY-2018
	Level Switch High High	LSHH-2018
	Level Switch Low Low	LSLL-2018
	Level Alarm High High	LAHH-2018
	Level Alarm Low Low	LALL-2018

Basis Discussion: Table 3-29 is developed from 24590-LAW-PER-J-03-003, *System Logic Description for Low-Activity Waste Facility – LAW Primary Offgas Process (LOP) System*. This requirement is derived from the Washington Administrative Code (WAC) Dangerous Waste Regulations at WAC Chapter 173-303, specifically the Tank System regulations in WAC 173-303-640(5)(b). These regulatory requirements have been incorporated into the Dangerous Waste Permit, WTP- Operating Unit Group 10, WA 7890008967, as permit conditions III.10.E.9.e.iv and III.10.H.1.a.xvii.

Verification: Construction/installation verification is expected to be achieved through the following:

Verif. Method	Verif. By	Plan	Notes/Comments
R	**ENV**	Review the Instrument Data Sheets for the instruments to verify Instruments in Table 3-31.	

3.11.11.2.7 Corrosion Protection

Requirement: The Permittees must provide the type and degree of corrosion protection for LOP-VSL-00002 recommended by an independent corrosion expert, based on the information provided in Operating Unit Group

10, Appendix 9.9, and 9.11 of this Permit, as approved pursuant to Permit Conditions III.10.E.9.b.i., III.10.E.9.b.iv., III.10.E.9.b.v., III.10.E.9.c.i., III.10.E.9.c.iv., III.10.E.9.c.v., III.10.E.9.d.i., III.10.E.9.d.iv., and III.10.E.9.d.v. or other corrosion protection if the Ecology believes other corrosion protection is necessary to ensure the integrity of the tank system during use of the tank system. The installation of a corrosion protection system that is field fabricated must be supervised by an independent corrosion expert to ensure proper installation. [Section III.10.E.3.e, DWP]

Basis Discussion: This requirement is derived from the Washington Administrative Code (WAC) Dangerous Waste Regulations at WAC Chapter 173-303, specifically the Tank System regulations in WAC 173-303-640. These regulatory requirements have been incorporated into the Dangerous Waste Permit, WTP- Operating Unit Group 10, WA 7890008967, as permit condition III.10.E.3.e.

This requirement is not applicable to tank systems with components that are not in contact with soil or water.

Verification: Construction/installation verification is expected to be achieved through the following:

Verif. Method	Verif. By	Plan	Notes/Comments
R	**ENV**	Review completed installation packages to verify the requirements corrosion protection are met.	

3.11.11.2.8 Ancillary Equipment

Requirement: LOP-VSL-00002 ancillary equipment shall be supported and protected against physical damage and excessive stress due to settlement, vibration, expansion, or contraction. (WAC 173-303-640(3)(f)). [Section III.10.E.3.d, DWP]

Basis Discussion: This requirement is derived from the Washington Administrative Code (WAC) Dangerous Waste Regulations at WAC Chapter 173-303, specifically the Tank System regulations in WAC 173-303-640. These regulatory requirements have been incorporated into the Dangerous Waste Permit, WTP- Operating Unit Group 10, WA 7890008967, as permit condition III.10.E.3.d.

Verification: Construction/installation verification is expected to be achieved through the following:

Verif. Method	Verif. By	Plan	Notes/Comments
R	**ENV**	Review completed installation packages and nonconformance reports and construction deficiency reports to confirm the plant was constructed in accordance with the approved designs, plans and specifications.	

3.11.11.3 LVP Caustic Collection Tank (LVP-TK-00001)

3.11.11.3.1 Vessel System Installation Inspection

Requirement: The installation of the LVP-TK-00001 shall be performed with proper handling procedures to prevent damage to the system during installation. Prior to covering, enclosing, or placing the LVP tank system or component, an independent, qualified installation inspector or an independent, qualified, registered professional engineer, either of whom is trained and experience in the proper installation of tank systems or components, must inspect the system as specified in WAC 173-303-640 (3)(c), WAC 173-303-640 (3)(h)

- Specify and document the handling or installation procedures to protect the integrity of the tank system. The procedures should prevent or detect the following defects:
    - weld breaks (WAC 173-303-640 (3)(c)(i))
    - punctures (WAC 173-303-640 (3)(c)(ii))
    - scrapes of protective coatings (WAC 173-303-640 (3)(c)(iii))
    - cracks (WAC 173-303-640 (3)(c)(iv))
    - corrosion (WAC 173-303-640 (3)(c)(v))
    - other structural damage or inadequate construction or installation (WAC 173-303-640(3)(c)(vi))
- Specify and document the remedies for any handling or installation procedure discrepancies identified before the tank system is covered, enclosed, or placed in use. (WAC 173-303-640(3)(c))

[Section III.10.E.3.a, Chp. 4.0, Section 4.2.5, DWP]

Basis Discussion: This requirement is derived from the Washington Administrative Code (WAC) Dangerous Waste Regulations at WAC Chapter 173-303, specifically the Tank System regulations in WAC 173-303-640. These regulatory requirements have been incorporated into the Dangerous Waste Permit, WTP- Operating Unit Group 10, WA 7890008967, as permit condition III.10.E.3.a (WAC 173-303-640(3)(c), WAC 173-303-640(3)(h)).

Verification: Construction/installation verification is expected to be achieved through the following:

Verif. Method	Verif. By	Plan	Notes/Comments
R	**ENV**	Review completed independent qualified inspector installation packages.	

3.11.11.3.2 System Installation

Requirement: The independent tank system installation inspection and subsequent written statements will be certified pursuant to Permit Condition III.10.E.1.d., comply with all requirements of WAC 173-303-640(3)(h) and will consider, but not be limited to, the following tank system installation documentation:

- Field installation report with date of installation;
- Approved welding procedures;
- Welder qualifications and certification;
- Hydro-test reports, as applicable, in accordance with the American Society of Mechanical Engineers Boiler and Pressure Vessel Code, Section VIII, Division 1, American Petroleum Institute (API) Standard 620, or Standard 650 as applicable;
- Tester credentials;
- Field inspector credentials;
- Field inspector reports;
- Field waiver reports; and
- Non-compliance reports and corrective action (including field waiver reports) and repair reports.

[Section III.10.E.3.g, DWP]

Basis Discussion: None.

Verification: Construction/installation verification is expected to be achieved through the following:

Verif. Method	Verif. By	Plan	Notes/Comments
R	**ENV**	Review completed installation packages for compliance documentation.	

3.11.11.3.3 Vapor Collection System

Requirement: The LVP-TK-00001 tank system is constructed with features that prevent escape of vapors, fumes, or other emissions into the air. [Section III.10.E.9.c.xii, DWP]

Basis Discussion: This requirement is derived from the Washington Administrative Code (WAC) Dangerous Waste Regulations at WAC Chapter 173-303, specifically the Tank System regulations in WAC 173-303-640. These regulatory requirements have been incorporated into the Dangerous Waste Permit, WTP- Operating Unit Group 10, WA 7890008967, as permit condition III.10.E.9.c.xii (WAC 173-303-640(5)(e)).

Verification: Construction/installation verification is expected to be achieved through the following:

Verif. Method	Verif. By	Plan	Notes/Comments
R	**ENV**	Review tank system as-built P&IDs to verify the system has a vapor collection system and has been constructed according to the design.	

3.11.11.3.4 Vessel Construction

Requirement: The LVP-TK-00001 construction and location shall be in accordance with the locations dimensions, capacities, material and appurtenances as shown the DWP permitted design as shown in Table 3-32. [Chp. 04, Table 4E-1, DWP]

Table 3-32 LAW Casutic Collection Tank

Vessel Number/Location	Description	Material	Total Volume (US Gallons)	Approximate Dimensions Inside Diameter x Height or Length in feed and inches (tangent line/tangent line)
LVP-TK-00001/ L-0218	LAW Caustic Collection Tank	Stainless Steel	14,232	13 ft. (od) x 14 ft. 4 in.

Basis Discussion: Locations, dimensions, capacities, material and appurtenances is provided in DWP Tables 4E-1.

Verification: Construction/installation verification is expected to be achieved through the following:

Verif. Method	Verif. By	Plan	Notes/Comments
R	**ENV**	Perform a review of the manufacturers data sheet to verify the material of construction and dimensions.	

3.11.11.3.5 Tightness Testing

Requirement: The Permittees must test for tightness for the LVP-TK-00001 system prior [unknown1]to these components being covered, enclosed, or placed into use. If a tank system is found not to be tight, all repairs necessary to remedy the leak(s) in the system must be performed prior to the tank system being covered, enclosed, or placed in use. [Section III.10.E.3.c, DWP]

Basis Discussion: This requirement is derived from the Washington Administrative Code (WAC) Dangerous Waste Regulations at WAC Chapter 173-303, specifically the Tank System regulations in WAC 173-303-640. These regulatory requirements have been incorporated into the Dangerous Waste Permit, WTP- Operating Unit Group 10, WA 7890008967, as permit condition III.10.E.3.c.

Verification: Construction/installation verification is expected to be achieved through the following:

Verif. Method	Verif. By	Plan	Notes/Comments
R	**ENV**	Review completed installation packages documentation to ensure the tightness testing was completed.	

3.11.11.3.6 LVP Caustic Collection Tank Overflow Prevention Controls

Requirement: The LVP caustic collection tank shall be constructed with the appropriate instrumentation to allow for the control and prevention of overflow from the tank or containment systems. See Table 3-33 for the overflow instruments. [Sections III.10.E.9.e.iv, III.10.H.1.a.xvii, DWP]

Table 3-33 LVP Caustic Collection Tank Overflow Prevention Controls

Monitoring/Control Parameter	Type of Instrument/ Control Device	Instrument/Control Device Tag Number
LVP Caustic Collection Tank LVP-TK-00001	Level Transmitter	LT-0055
	Level Indicators	LI-0055 LI-0055D
	Level Relay	LY-0055D
	Level Switch High High	LSHH-0055D
	Level Switch Low Low	LSLL-0055D
	Level Alarm High High	LAHH-0055D
	Level Alarm Low Low	LALL-0055D

Basis Discussion: Table 3-33 is developed from 24590-LAW-PER-J-04-0002, *System Logic Description for Low-Activity Waste Facility – LAW Secondary Offgas Process (LVP) System*. This requirement is derived from the Washington Administrative Code (WAC) Dangerous Waste Regulations at WAC Chapter 173-303, specifically the Tank System regulations in WAC 173-303-640(5)(b). These regulatory requirements have been incorporated into the Dangerous Waste Permit, WTP- Operating Unit Group 10, WA 7890008967, as permit conditions III.10.E.9.e.iv and III.10.H.1.a.xvii.

Verification: Construction/installation verification is expected to be achieved through the following:

Verif. Method	Verif. By	Plan	Notes/Comments
R	**ENV**	Review the Instrument Data Sheets for the instruments to verify Instruments in Table 3-33.	

3.11.11.3.7 Corrosion Protection

Requirement: The Permittees must provide the type and degree of corrosion protection for LVP-TK-00001 recommended by an independent corrosion expert, based on the information provided in Operating Unit Group 10, Appendix 11.9, and 11.11 of this Permit, as approved pursuant to Permit Conditions III.10.E.9.b.i., III.10.E.9.b.iv., III.10.E.9.b.v., III.10.E.9.c.i., III.10.E.9.c.iv., III.10.E.9.c.v., III.10.E.9.d.i., III.10.E.9.d.iv., and III.10.E.9.d.v. or other corrosion protection if the Ecology believes other corrosion protection is necessary to ensure the integrity of the tank system during use of the tank system. The installation of a corrosion protection system that is field fabricated must be supervised by an independent corrosion expert to ensure proper installation. [Section III.10.E.3.e, DWP]

Basis Discussion: This requirement is derived from the Washington Administrative Code (WAC) Dangerous Waste Regulations at WAC Chapter 173-303, specifically the Tank System regulations in WAC 173-303-640. These regulatory requirements have been incorporated into the Dangerous Waste Permit, WTP- Operating Unit Group 10, WA 7890008967, as permit condition III.10.E.3.e.

This requirement is not applicable to tank systems with components that are not in contact with soil or water.

Verification: Construction/installation verification is expected to be achieved through the following:

Verif. Method	Verif. By	Plan	Notes/Comments
R	**ENV**	Review completed installation packages to verify the requirements corrosion protection are met.	

3.11.11.3.8 Ancillary Equipment

Requirement: LOP-VSL-00002 ancillary equipment shall be supported and protected against physical damage and excessive stress due to settlement, vibration, expansion, or contraction. (WAC 173-303-640(3)(f)). [Section III.10.E.3.d, DWP]

Basis Discussion: This requirement is derived from the Washington Administrative Code (WAC) Dangerous Waste Regulations at WAC Chapter 173-303, specifically the Tank System regulations in WAC 173-303-640. These regulatory requirements have been incorporated into the Dangerous Waste Permit, WTP- Operating Unit Group 10, WA 7890008967, as permit condition III.10.E.3.d.

Verification: Construction/installation verification is expected to be achieved through the following:

Verif. Method	Verif. By	Plan	Notes/Comments
R	**ENV**	Review completed installation packages and nonconformance reports and construction deficiency reports to confirm the plant was constructed in	

Verif. Method	Verif. By	Plan	Notes/Comments
		accordance with the approved designs, plans and specifications.	

3.11.12 LOP/LVP Vaults, Rooms and Secondary Containment

3.11.12.1 Melter 1 Process Cell (L-0123)

3.11.12.1.1 L-0123 Dimensions

Requirement: The room No. L-0123 dimensions shall be as indicated in 24590-LAW-PER-M-02-002, *Flooding Volume for LAW Facility*. [Chp. 4E, Table 4E-3, DWP]

Basis Discussion: The secondary containment for L-0123 is influenced by the geometry and slope of the cell floor. Additionally, the volume of containment is also influenced by the floor size.

Verification: Construction/installation verification is expected to be achieved through the following:

Verif. Method	Verif. By	Plan	Notes/Comments
R	**ENV**	Review the as built general arrangement drawings to verify the dimensions of the cell dimensions.	

3.11.12.1.2 Secondary Containment System Integrity

Requirement: The secondary containment for the melter 1 process cell (L-0123), as approved/modified pursuant to Permit Condition III.10.E.9., are free of cracks or gaps to prevent any migration of dangerous and/or mixed waste or accumulated liquid out of the system to the soil, ground water, or surface water at any time that waste is in the tank system [WAC 173-303-320, WAC 173-303-640(4)(b)(i), WAC 173-303-640(4)(e)(i)(C), WAC 173-303-640(6), and WAC 173-303-806(4)(c)(vii)]. [Section III.10.E.5.g, DWP]

Basis Discussion: This requirement is derived from the Washington Administrative Code (WAC) Dangerous Waste Regulations at WAC Chapter 173-303, specifically the Tank System regulations in WAC 173-303-640. These regulatory requirements have been incorporated into the Dangerous Waste Permit, WTP- Operating Unit Group 10, WA 7890008967, as permit condition III.10.E.5.g (WAC 173-303-640(4)(e)(i)(C), WAC 173-303-640(4)(e)(i)(D), WAC 173-303-320, WAC 173-303-640(4)(b)(i), WAC 173-303-640(4)(e)(i)(C), WAC 173-303-640(6), and WAC 173-303-806(4)(c)(vii)).

Verification: Construction/installation verification is expected to be achieved through the following:

Verif. Method	Verif. By	Plan	Notes/Comments
I	**ENV**	Perform a permitted facility and system inspection of the tank system to verify construction and installation is free of cracks or gaps to prevent any migration of dangerous and/or mixed waste.	

3.11.12.1.3 Construction of Secondary Containment

Requirement: The Permittees will construct the secondary containment systems for the melter 1 process cell (L-0123), as approved/modified pursuant to Permit Condition III.10.E.9, as specified in Operating Unit Group 10, Appendices 9.2, 9.4 through 9.14, 9.18 of this Permit, as approved pursuant to Permit Conditions III.10.E.9.b., III.10.E.9.c., and III.10.E.9.d. The secondary containment wall coating height required for this room is 4 ft. [Section III.10.E.2.b, DWP]

Basis Discussion: Important containment features are delineated and described in these appendices with some specifics covered by construction requirements identified in this document.

Verification: Construction/installation verification is expected to be achieved through the following:

Verif. Method	Verif. By	Plan	Notes/Comments
R	**ENG**	Review as-built drawings of the drawings and specification listed in the requirement.	

3.11.12.1.4 Leak Detection

Requirement: The Permittees will install and test all process and leak detection system monitors/instrumentation as specified in Permit Tables III.10.H.C and III.10.H.F, as approved/modified pursuant to Permit Condition III.10.H.5, in accordance with Operating Unit Group 10, Appendices 9.1, 9.2, and 9.14 of this Permit, as approved pursuant to Permit Conditions III.10.H.5.d.x. and III.10.H.5.f.xvi. [Section III.10.H.1.a.xiv, III.10.I.1.a.viii, DWP]

Basis Discussion: This requirement is derived from the Washington Administrative Code (WAC) Dangerous Waste Regulations at WAC Chapter 173-303, specifically the Tank System Regulations in WAC 173-303-640. These regulatory requirements have been incorporated into the Dangerous Waste Permit, WTP – Operating Unit Group 10, WA 78900089, as permit conditions III.10.H.1.a.xiv and III.10.I.1.a.viii.

Verification: Construction/installation verification is expected to be achieved through the following:

Verif. Method	Verif. By	Plan	Notes/Comments
R	**ENG**	Review the Instrument Data Sheets for the instruments to verify the criteria in Table 3.2.	

3.11.12.1.5 Secondary Containment

Requirement: The Permittees will ensure that the secondary containment systems for the LAW Vitrification System sub-systems listed in Permit Tables III.10.H.A and III.10.H.B, as approved/modified pursuant to Permit Condition III.10.H.5, are free of cracks or gaps to prevent any migration of dangerous and/or mixed waste or accumulated liquid out of the system to the soil, groundwater, or surface water at any time during use of the LAW Vitrification System sub-systems. Any indication that a crack or gap may exist in the containment systems will be investigated and repaired in accordance with Operating Unit Group 10, Appendix 9.18 of this Permit, as approved pursuant to Permit Condition III.10.H.5.e.v [WAC 173-303–640(4)(b)(i), WAC 173-303–640(4)(e)(i)(C), and WAC 173-303-640(6), in accordance with WAC 173-303-680(2) and (3), WAC 173-303-806(4)(i)(i)(B), and WAC 173-303-320]. [Section III.10.H.1.a.xx, III.10.I.1.a.xiv, DWP]

Basis Discussion: This requirement is derived from the Washington Administrative Code (WAC) Dangerous Waste Regulations at WAC Chapter 173-303, specifically the Tank System regulations in WAC 173-303-640. These regulatory requirements have been incorporated into the Dangerous Waste Permit, WTP- Operating Unit Group 10, WA 7890008967, as permit conditions III.10.H.1.a.xx and III.10.I.1.a.xiv.

Verification: Construction/installation verification is expected to be achieved through the following:

Verif. Method	Verif. By	Plan	Notes/Comments
I	**ENV**	Perform a permitted facility and system inspection of the tank system to verify construction and installation is free of cracks or gaps to prevent any migration of dangerous and/or mixed waste.	

3.11.12.1.6 Impermeable Coating

Requirement: An impermeable coating, as specified in Operating Unit Group 10, Appendices 9.4, 9.5, 9.7, 9.9, 9.11, and 9.12 of this Permit, as approved pursuant to Permit Condition III.10.H.5.b.v. will be maintained for all concrete containment systems and concrete portions of containment systems for each LAW Vitrification System sub-systems listed in Permit Tables III.10.H.A and III.10.H.B, as approved/modified pursuant to Permit Condition III.10.H.5 (concrete containment systems that do not have a liner, pursuant to WAC 173-303-640(4)(e)(i), in accordance with WAC 173-303-680(2), and have construction joints, will meet the requirements of WAC 173-303-640(4)(e)(ii)(C), in accordance with WAC 173-303-680(2). The coating will prevent migration of any dangerous and mixed waste into the concrete. All coatings will meet the following performance standards:

- The coating must seal the containment surface such that no cracks, seams, or other avenues through which liquid could migrate are present;
- The coating must be of adequate thickness and strength to withstand the normal operation of equipment and personnel within the given area such that degradation or physical damage to the coating or lining can be identified and remedied before dangerous and mixed waste could migrate from the system; and
- The coating must be compatible with the dangerous and mixed waste, treatment reagents, or other materials managed in the containment system [WAC 173-303-640(4)(e)(ii)(D), in accordance with WAC 173-303-680(2) and (3), and WAC 173-303-806(4)(i)(i)(A)].

[Section III.10.I.1.a.xvi, DWP]

Basis Discussion: This requirement is derived from the Washington Administrative Code (WAC) Dangerous Waste Regulations at WAC Chapter 173-303, specifically the Tank System regulations in WAC 173-303-640. These regulatory requirements have been incorporated into the Dangerous Waste Permit, WTP- Operating Unit Group 10, WA 7890008967, as permit condition III.10.I.1.a.xvi.

Verification: Construction/installation verification is expected to be achieved through the following:

Verif. Method	Verif. By	Plan	Notes/Comments
R	**CON**	Review the construction documentation to verify the impermeable coating have been installed.	
I	**ENV**	Perform a permitted facility and system inspection of tank system to verify construction and installation is in compliance with the permitted design.	

3.11.12.2 Melter 2 Process Cell (L-0124)

3.11.12.2.1 L-0124 Dimensions

Requirement: The room No. L-0124 dimensions shall be as indicated in 24590-LAW-PER-M-02-002, *Flooding Volume for LAW Facility*. [Chp. 4E, Table 4E-3, DWP]

Basis Discussion: The secondary containment for L-0124 is influenced by the geometry and slope of the cell floor. Additionally, the volume of containment is also influenced by the floor size.

Verification: Construction/installation verification is expected to be achieved through the following:

Verif. Method	Verif. By	Plan	Notes/Comments
R	**ENV**	Review the as built general arrangement drawings to verify the dimensions of the cell dimensions.	

3.11.12.2.2 Secondary Containment System Integrity

Requirement: The secondary containment for the melter 2 process cell (L-0124), as approved/modified pursuant to Permit Condition III.10.E.9., are free of cracks or gaps to prevent any migration of dangerous and/or mixed waste or accumulated liquid out of the system to the soil, ground water, or surface water at any time that waste is in the tank system [WAC 173-303-320, WAC 173-303-640(4)(b)(i), WAC 173-303-640(4)(e)(i)(C), WAC 173-303-640(6), and WAC 173-303-806(4)(c)(vii)]. [Section III.10.E.5.g, DWP]

Basis Discussion: This requirement is derived from the Washington Administrative Code (WAC) Dangerous Waste Regulations at WAC Chapter 173-303, specifically the Tank System regulations in WAC 173-303-640. These regulatory requirements have been incorporated into the Dangerous Waste Permit, WTP- Operating Unit Group 10, WA 7890008967, as permit condition III.10.E.5.g (WAC 173-303-640(4)(e)(i)(C), WAC 173-303-640(4)(e)(i)(D), WAC 173-303-320, WAC 173-303-640(4)(b)(i), WAC 173-303-640(4)(e)(i)(C), WAC 173-303-640(6), and WAC 173-303-806(4)(c)(vii)).

Verification: Construction/installation verification is expected to be achieved through the following:

Verif. Method	Verif. By	Plan	Notes/Comments
I	**ENV**	Perform a permitted facility and system inspection of the tank system to verify construction and installation is free of cracks or gaps to prevent any migration of dangerous and/or mixed waste.	

3.11.12.2.3 Construction of Secondary Containment

Requirement: The Permittees will construct the secondary containment systems for the melter 2 process cell (L-0124), as approved/modified pursuant to Permit Condition III.10.E.9, as specified in Operating Unit Group 10, Appendices 9.2, 9.4 through 9.14, 9.18 of this Permit, as approved pursuant to Permit Conditions III.10.E.9.b., III.10.E.9.c., and III.10.E.9.d. The secondary containment wall coating height required for this room is 4 ft. [Section III.10.E.2b, DWP]

Basis Discussion: Important containment features are delineated and described in these appendices with some specifics covered by construction requirements identified in this document.

Verification: Construction/installation verification is expected to be achieved through the following:

Verif. Method	Verif. By	Plan	Notes/Comments
R	**ENG**	Review as-built drawings of the drawings and specification listed in the requirement.	

3.11.12.2.4 Leak Detection

Requirement: The Permittees will install and test all process and leak detection system monitors/instrumentation as specified in Permit Tables III.10.H.C and III.10.H.F, as approved/modified pursuant to Permit Condition III.10.H.5, in accordance with Operating Unit Group 10, Appendices 9.1, 9.2, and 9.14 of this Permit, as approved pursuant to Permit Conditions III.10.H.5.d.x. and III.10.H.5.f.xvi. [Section III.10.H.1.a.xiv, III.10.I.1.a.viii, DWP]

Basis Discussion: This requirement is derived from the Washington Administrative Code (WAC) Dangerous Waste Regulations at WAC Chapter 173-303, specifically the Tank System Regulations in WAC 173-303-640. These regulatory requirements have been incorporated into the Dangerous Waste Permit, WTP – Operating Unit Group 10, WA 78900089, as permit condition III.10.H.1.a.xiv.

Verification: Construction/installation verification is expected to be achieved through the following:

Verif. Method	Verif. By	Plan	Notes/Comments
R	**ENG**	Review the Instrument Data Sheets for the instruments to verify the construction criteria.	

3.11.12.2.5 Secondary Containment

Requirement: The Permittees will ensure that the secondary containment systems for the LAW Vitrification System sub-systems listed in Permit Tables III.10.H.A and III.10.H.B, as approved/modified pursuant to Permit Condition III.10.H.5, are free of cracks or gaps to prevent any migration of dangerous and/or mixed waste or accumulated liquid out of the system to the soil, groundwater, or surface water at any time during use of the LAW Vitrification System sub-systems. Any indication that a crack or gap may exist in the containment systems will be investigated and repaired in accordance with Operating Unit Group 10, Appendix 9.18 of this Permit, as approved pursuant to Permit Condition III.10.H.5.e.v [WAC 173-303–640(4)(b)(i), WAC 173-303–640(4)(e)(i)(C), and WAC 173-303-640(6), in accordance with WAC 173-303-680(2) and (3), WAC 173-303-806(4)(i)(i)(B), and WAC 173-303-320]. [Section III.10.H.1.a.xx, III.10.I.1.a.xiv, DWP]

Basis Discussion: This requirement is derived from the Washington Administrative Code (WAC) Dangerous Waste Regulations at WAC Chapter 173-303, specifically the Tank System regulations in WAC 173-303-640. These regulatory requirements have been incorporated into the Dangerous Waste Permit, WTP- Operating Unit Group 10, WA 7890008967, as permit conditions III.10.H.1.a.xx and III.10.I.1.a.xiv.

Verification: Construction/installation verification is expected to be achieved through the following:

Verif. Method	Verif. By	Plan	Notes/Comments
I	**ENV**	Perform a permitted facility and system inspection of the tank system to verify construction and installation	

Verif. Method	Verif. By	Plan	Notes/Comments
		is free of cracks or gaps to prevent any migration of dangerous and/or mixed waste.	

3.11.12.2.6 Impermeable Coating

Requirement: An impermeable coating, as specified in Operating Unit Group 10, Appendices 9.4, 9.5, 9.7, 9.9, 9.11, and 9.12 of this Permit, as approved pursuant to Permit Condition III.10.H.5.b.v. will be maintained for all concrete containment systems and concrete portions of containment systems for each LAW Vitrification System sub-systems listed in Permit Tables III.10.H.A and III.10.H.B, as approved/modified pursuant to Permit Condition III.10.H.5 (concrete containment systems that do not have a liner, pursuant to WAC 173-303-640(4)(e)(i), in accordance with WAC 173-303-680(2), and have construction joints, will meet the requirements of WAC 173-303-640(4)(e)(ii)(C), in accordance with WAC 173-303-680(2). The coating will prevent migration of any dangerous and mixed waste into the concrete. All coatings will meet the following performance standards:

- The coating must seal the containment surface such that no cracks, seams, or other avenues through which liquid could migrate are present;
- The coating must be of adequate thickness and strength to withstand the normal operation of equipment and personnel within the given area such that degradation or physical damage to the coating or lining can be identified and remedied before dangerous and mixed waste could migrate from the system; and
- The coating must be compatible with the dangerous and mixed waste, treatment reagents, or other materials managed in the containment system [WAC 173-303-640(4)(e)(ii)(D), in accordance with WAC 173-303-680(2) and (3), and WAC 173-303-806(4)(i)(i)(A)].

[Section III.10.I.1.a.xvi, DWP]

Basis Discussion: This requirement is derived from the Washington Administrative Code (WAC) Dangerous Waste Regulations at WAC Chapter 173-303, specifically the Tank System regulations in WAC 173-303-640. These regulatory requirements have been incorporated into the Dangerous Waste Permit, WTP- Operating Unit Group 10, WA 7890008967, as permit condition III.10.I.1.a.xvi.

Verification: Construction/installation verification is expected to be achieved through the following:

Verif. Method	Verif. By	Plan	Notes/Comments
R	**CON**	Review the construction documentation to verify the impermeable coating have been installed.	
I	**ENV**	Perform a permitted facility and system inspection of tank system to verify construction and installation is in compliance with the permitted design.	

3.11.12.3 Caustic Scrubber Blowdown Collection Berm (L-0218)

3.11.12.3.1 L-0218 Berm Dimensions

Requirement: The caustic scrubber blowdown collection berm in room No. L-0218 dimensions shall be as indicated in 24590-LAW-PER-M-02-002, *Flooding Volume for LAW Facility*. [Chp. 4E, Table 4E-3, DWP]

Basis Discussion: The secondary containment for L-0218 berm is influenced by the geometry and slope of the cell floor. Additionally, the volume of containment is also influenced by the floor size.

Verification: Construction/installation verification is expected to be achieved through the following:

Verif. Method	Verif. By	Plan	Notes/Comments
R	**ENV**	Review the as built general arrangement drawings to verify the dimensions of the cell dimensions.	

3.11.12.3.2 Secondary Containment System Integrity

Requirement: The secondary containment for the caustic scrubber system, as approved/modified pursuant to Permit Condition III.10.E.9., are free of cracks or gaps to prevent any migration of dangerous and/or mixed waste or accumulated liquid out of the system to the soil, ground water, or surface water at any time that waste is in the tank system [WAC 173-303-320, WAC 173-303-640(4)(b)(i), WAC 173-303-640(4)(e)(i)(C), WAC 173-303-640(6), and WAC 173-303-806(4)(c)(vii)]. [Section III.10.E.5.g, DWP]

Basis Discussion: This requirement is derived from the Washington Administrative Code (WAC) Dangerous Waste Regulations at WAC Chapter 173-303, specifically the Tank System regulations in WAC 173-303-640. These regulatory requirements have been incorporated into the Dangerous Waste Permit, WTP- Operating Unit Group 10, WA 7890008967, as permit condition III.10.E.5.g (WAC 173-303-640(4)(e)(i)(C), WAC 173-303-640(4)(e)(i)(D), WAC 173-303-320, WAC 173-303-640(4)(b)(i), WAC 173-303-640(4)(e)(i)(C), WAC 173-303-640(6), and WAC 173-303-806(4)(c)(vii)).

Verification: Construction/installation verification is expected to be achieved through the following:

Verif. Method	Verif. By	Plan	Notes/Comments
I	**ENV**	Perform a permitted facility and system inspection of the tank system to verify construction and installation is free of cracks or gaps to prevent any migration of dangerous and/or mixed waste.	

3.11.12.3.3 Construction of Secondary Containment

Requirement: The Permittees will construct the secondary containment systems for the caustic scrubber system (L-0218 berm), as approved/modified pursuant to Permit Condition III.10.E.9., as specified in Operating Unit Group 10, Appendices 9.2, 9.4 through 9.14, 9.18 of this Permit, as approved pursuant to Permit Conditions III.10.E.9.b., III.10.E.9.c., and III.10.E.9.d. [Section III.10.E.2b, DWP]

Basis Discussion: Important containment features are delineated and described in these appendices with some specifics covered by construction requirements identified in this document.

Verification: Construction/installation verification is expected to be achieved through the following:

Verif. Method	Verif. By	Plan	Notes/Comments
R	**ENG**	Review as-built drawings of the drawings and specification listed in the requirement.	

3.11.12.3.4 Leak Detection

Requirement: The Permittees will install and test all process and leak detection system monitors/instrumentation as specified in Permit Tables III.10.H.C and III.10.H.F, as approved/modified pursuant to Permit Condition III.10.H.5, in accordance with Operating Unit Group 10, Appendices 9.1, 9.2, and 9.14 of this Permit, as approved pursuant to Permit Conditions III.10.H.5.d.x. and III.10.H.5.f.xvi. [Section III.10.H.1.a.xiv, III.10.I.1.a.viii, DWP]

Basis Discussion: This requirement is derived from the Washington Administrative Code (WAC) Dangerous Waste Regulations at WAC Chapter 173-303, specifically the Tank System Regulations in WAC 173-303-640. These regulatory requirements have been incorporated into the Dangerous Waste Permit, WTP – Operating Unit Group 10, WA 78900089, as permit conditions III.10.H.1.a.xiv and III.10.I.1.a.viii.

Verification: Construction/installation verification is expected to be achieved through the following:

Verif. Method	Verif. By	Plan	Notes/Comments
R	**ENG**	Review the Instrument Data Sheets for the instruments to verify the construction criteria.	

3.11.12.3.5 Secondary Containment

Requirement: The Permittees will ensure that the secondary containment systems for the LAW Vitrification System sub-systems listed in Permit Tables III.10.H.A and III.10.H.B, as approved/modified pursuant to Permit Condition III.10.H.5, are free of cracks or gaps to prevent any migration of dangerous and/or mixed waste or accumulated liquid out of the system to the soil, groundwater, or surface water at any time during use of the LAW Vitrification System sub-systems. Any indication that a crack or gap may exist in the containment systems will be investigated and repaired in accordance with Operating Unit Group 10, Appendix 9.18 of this Permit, as approved pursuant to Permit Condition III.10.H.5.e.v [WAC 173-303–640(4)(b)(i), WAC 173-303–640(4)(e)(i)(C), and WAC 173-303-640(6), in accordance with WAC 173-303-680(2) and (3), WAC 173-303-806(4)(i)(i)(B), and WAC 173-303-320]. [Section III.10.H.1.a.xx, III.10.I.1.a.xiv, DWP]

Basis Discussion: This requirement is derived from the Washington Administrative Code (WAC) Dangerous Waste Regulations at WAC Chapter 173-303, specifically the Tank System regulations in WAC 173-303-640. These regulatory requirements have been incorporated into the Dangerous Waste Permit, WTP- Operating Unit Group 10, WA 7890008967, as permit condition III.10.H.1.a.xx.

Verification: Construction/installation verification is expected to be achieved through the following:

Verif. Method	Verif. By	Plan	Notes/Comments
I	**ENV**	Perform a permitted facility and system inspection of the tank system to verify construction and installation is free of cracks or gaps to prevent any migration of dangerous and/or mixed waste.	

3.11.12.3.6 Impermeable Coating

Requirement: An impermeable coating, as specified in Operating Unit Group 10, Appendices 9.4, 9.5, 9.7, 9.9, 9.11, and 9.12 of this Permit, as approved pursuant to Permit Condition III.10.H.5.b.v. will be maintained for all concrete containment systems and concrete portions of containment systems for each LAW Vitrification System

sub-systems listed in Permit Tables III.10.H.A and III.10.H.B, as approved/modified pursuant to Permit Condition III.10.H.5 (concrete containment systems that do not have a liner, pursuant to WAC 173-303-640(4)(e)(i), in accordance with WAC 173-303-680(2), and have construction joints, will meet the requirements of WAC 173-303-640(4)(e)(ii)(C), in accordance with WAC 173-303-680(2). The coating will prevent migration of any dangerous and mixed waste into the concrete. All coatings will meet the following performance standards:

- The coating must seal the containment surface such that no cracks, seams, or other avenues through which liquid could migrate are present;
- The coating must be of adequate thickness and strength to withstand the normal operation of equipment and personnel within the given area such that degradation or physical damage to the coating or lining can be identified and remedied before dangerous and mixed waste could migrate from the system; and
- The coating must be compatible with the dangerous and mixed waste, treatment reagents, or other materials managed in the containment system [WAC 173-303-640(4)(e)(ii)(D), in accordance with WAC 173-303-680(2) and (3), and WAC 173-303-806(4)(i)(i)(A)].

[Section III.10.I.1.a.xvi, DWP]

Basis Discussion: This requirement is derived from the Washington Administrative Code (WAC) Dangerous Waste Regulations at WAC Chapter 173-303, specifically the Tank System regulations in WAC 173-303-640. These regulatory requirements have been incorporated into the Dangerous Waste Permit, WTP- Operating Unit Group 10, WA 7890008967, as permit condition III.10.I.1.a.xvi.

Verification: Construction/installation verification is expected to be achieved through the following:

Verif. Method	Verif. By	Plan	Notes/Comments
R	**CON**	Review the construction documentation to verify the impermeable coating have been installed.	
I	**ENV**	Perform a permitted facility and system inspection of tank system to verify construction and installation is in compliance with the permitted design.	

3.11.12.4 Caustic Scrubber Curb Area (L-0304F curbed section only)

3.11.12.4.1 L-0304F Dimensions

Requirement: The caustic scrubber curb area in room No. L-0304F dimensions shall be as indicated in 24590-LAW-PER-M-02-002, *Flooding Volume for LAW Facility*. [Chp. 4E, Table 4E-3, DWP]

Basis Discussion: The secondary containment for L-0304 is influenced by the geometry and slope of the cell floor. Additionally, the volume of containment is also influenced by the floor size.

Verification: Construction/installation verification is expected to be achieved through the following:

Verif. Method	Verif. By	Plan	Notes/Comments
R	**ENV**	Review the as built general arrangement drawings to verify the dimensions of the cell dimensions.	

3.11.12.4.2 Secondary Containment System Integrity

Requirement: The secondary containment for the caustic scrubber system, as approved/modified pursuant to Permit Condition III.10.E.9., are free of cracks or gaps to prevent any migration of dangerous and/or mixed waste or accumulated liquid out of the system to the soil, ground water, or surface water at any time that waste is in the tank system [WAC 173-303-320, WAC 173-303-640(4)(b)(i), WAC 173-303-640(4)(e)(i)(C), WAC 173-303-640(6), and WAC 173-303-806(4)(c)(vii)]. [Section III.10.E.5.g, DWP]

Basis Discussion This requirement is derived from the Washington Administrative Code (WAC) Dangerous Waste Regulations at WAC Chapter 173-303, specifically the Tank System regulations in WAC 173-303-640. These regulatory requirements have been incorporated into the Dangerous Waste Permit, WTP- Operating Unit Group 10, WA 7890008967, as permit condition III.10.E.5.g (WAC 173-303-640(4)(e)(i)(C), WAC 173-303-640(4)(e)(i)(D), WAC 173-303-320, WAC 173-303-640(4)(b)(i), WAC 173-303-640(4)(e)(i)(C), WAC 173-303-640(6), and WAC 173-303-806(4)(c)(vii)).

Verification: Construction/installation verification is expected to be achieved through the following:

Verif. Method	Verif. By	Plan	Notes/Comments
I	**ENV**	Perform a permitted facility and system inspection of the tank system to verify construction and installation is free of cracks or gaps to prevent any migration of dangerous and/or mixed waste.	

3.11.12.4.3 Construction of Secondary Containment

Requirement: The Permittees will construct the secondary containment systems for the caustic scrubber system (L-0304F curb), as approved/modified pursuant to Permit Condition III.10.E.9., as specified in Operating Unit Group 10, Appendices 9.2, 9.4 through 9.14, 9.18 of this Permit, as approved pursuant to Permit Conditions III.10.E.9.b., III.10.E.9.c., and III.10.E.9.d. [Section III.10.E.2.b, DWP]

Basis Discussion: Important containment features are delineated and described in these appendices with some specifics covered by construction requirements identified in this document.

Verification: Construction/installation verification is expected to be achieved through the following:

Verif. Method	Verif. By	Plan	Notes/Comments
R	**ENG**	Review as-built drawings of the drawings and specification listed in the requirement.	

3.11.12.4.4 Leak Detection

Requirement: The Permittees will install and test all process and leak detection system monitors/instrumentation as specified in Permit Tables III.10.H.C and III.10.H.F, as approved/modified pursuant to Permit Condition III.10.H.5, in accordance with Operating Unit Group 10, Appendices 9.1, 9.2, and 9.14 of this Permit, as approved pursuant to Permit Condition III.10.H.5.d.x. and III.10.H.5.f.xvi. [Sections III.10.H.1.a.xiv, III.10.I.1.a.viii, DWP]

Basis Discussion: This requirement is derived from the Washington Administrative Code (WAC) Dangerous Waste Regulations at WAC Chapter 173-303, specifically the Tank System Regulations in WAC 173-303-640.

These regulatory requirements have been incorporated into the Dangerous Waste Permit, WTP – Operating Unit Group 10, WA 78900089, as permit conditions III.10.H.1.a.xiv and III.10.I.1.a.viii.

Verification: Construction/installation verification is expected to be achieved through the following:

Verif. Method	Verif. By	Plan	Notes/Comments
R	**ENG**	Review the Instrument Data Sheets for the instruments to verify the construction criteria.	

3.11.12.4.5 Secondary Containment

Requirement: The Permittees will ensure that the secondary containment systems for the LAW Vitrification System sub-systems listed in Permit Tables III.10.H.A and III.10.H.B, as approved/modified pursuant to Permit Condition III.10.H.5, are free of cracks or gaps to prevent any migration of dangerous and/or mixed waste or accumulated liquid out of the system to the soil, groundwater, or surface water at any time during use of the LAW Vitrification System sub-systems. Any indication that a crack or gap may exist in the containment systems will be investigated and repaired in accordance with Operating Unit Group 10, Appendix 9.18 of this Permit, as approved pursuant to Permit Condition III.10.H.5.e.v [WAC 173-303–640(4)(b)(i), WAC 173-303–640(4)(e)(i)(C), and WAC 173-303-640(6), in accordance with WAC 173-303-680(2) and (3), WAC 173-303-806(4)(i)(i)(B), and WAC 173-303-320]. [Section III.10.H.1.a.xx, III.10.I.1.a.xiv, DWP]

Basis Discussion: This requirement is derived from the Washington Administrative Code (WAC) Dangerous Waste Regulations at WAC Chapter 173-303, specifically the Tank System regulations in WAC 173-303-640. These regulatory requirements have been incorporated into the Dangerous Waste Permit, WTP- Operating Unit Group 10, WA 7890008967, as permit conditions III.10.H.1.a.xx and III.10.I.1.a.xiv.

Verification: Construction/installation verification is expected to be achieved through the following:

Verif. Method	Verif. By	Plan	Notes/Comments
I	**ENV**	Perform a permitted facility and system inspection of the tank system to verify construction and installation is free of cracks or gaps to prevent any migration of dangerous and/or mixed waste.	

3.11.12.4.6 Impermeable Coating

Requirement: An impermeable coating, as specified in Operating Unit Group 10, Appendices 9.4, 9.5, 9.7, 9.9, 9.11, and 9.12 of this Permit, as approved pursuant to Permit Condition III.10.H.5.b.v. will be maintained for all concrete containment systems and concrete portions of containment systems for each LAW Vitrification System sub-systems listed in Permit Tables III.10.H.A and III.10.H.B, as approved/modified pursuant to Permit Condition III.10.H.5 (concrete containment systems that do not have a liner, pursuant to WAC 173-303-640(4)(e)(i), in accordance with WAC 173-303-680(2), and have construction joints, will meet the requirements of WAC 173-303-640(4)(e)(ii)(C), in accordance with WAC 173-303-680(2). The coating will prevent migration of any dangerous and mixed waste into the concrete. All coatings will meet the following performance standards:

- The coating must seal the containment surface such that no cracks, seams, or other avenues through which liquid could migrate are present;

- The coating must be of adequate thickness and strength to withstand the normal operation of equipment and personnel within the given area such that degradation or physical damage to the coating or lining can be identified and remedied before dangerous and mixed waste could migrate from the system; and
- The coating must be compatible with the dangerous and mixed waste, treatment reagents, or other materials managed in the containment system [WAC 173-303-640(4)(e)(ii)(D), in accordance with WAC 173-303-680(2) and (3), and WAC 173-303-806(4)(i)(i)(A)].

[Section III.10.I.1.a.xvi, DWP]

Basis Discussion: This requirement is derived from the Washington Administrative Code (WAC) Dangerous Waste Regulations at WAC Chapter 173-303, specifically the Tank System regulations in WAC 173-303-640. These regulatory requirements have been incorporated into the Dangerous Waste Permit, WTP- Operating Unit Group 10, WA 7890008967, as permit condition III.10.I.1.a.xvi.

Verification: Construction/installation verification is expected to be achieved through the following:

Verif. Method	Verif. By	Plan	Notes/Comments
R	**CON**	Review the construction documentation to verify the impermeable coating have been installed.	
I	**ENV**	Perform a permitted facility and system inspection of tank system to verify construction and installation is in compliance with the permitted design.	

3.11.12.4.7 Secondary Containment Seal Penetrations (L-0304F)

Requirement: The seal penetrations listed in Table 3-34, for room L-0304F shall be installed to prevent any migration fo wastes or accumulated liquid out fo the system to the soil, groundwater, or suface water at any time during the use of the tank system. [Sections III.10.E.5.g, III.10.H.1.a.xx, III.10.H.1.a.xiv, III.10.J.1.a.xx, Table III.10.H.G, DWP]

Table 3-34 Seal Penetration for Room L-0304F

Row Number	Room Number	Orientation	Discipline	Sequence Number
58	L-0304F	F	PD	03278
59	L-0304F	F	PD	03277

Basis Discussion: This requirement is derived from the Washington Administrative Code (WAC) Dangerous Waste Regulations at WAC Chapter 173-303, specifically the Tank System regulations in WAC 173-303-640. These regulatory requirements have been incorporated into the Dangerous Waste Permit, WTP- Operating Unit Group 10, WA 7890008967.

Verification: Construction/installation verification is expected to be achieved through the following:

Verif. Method	Verif. By	Plan	Notes/Comments
R	**ENV**	Review completed independent qualified inspector installation packages.	

3.11.13 LOP Bulges

3.11.13.1 LOP Bulges and Floor Drains Construction

Requirement: The Permittees will construct the LOP bulges listed in Permit Tables III.10.H.B. (see Table 3-35 and Table 3-36), as approved/modified pursuant to Permit Condition III.10.H.5, as specified in Permit Condition III.10.H.1 and Operating Unit Group 10, Chapter 4 of this Permit, and Operating Unit Group 10, Appendices 9.1 through 9.15 and 9.17 of this Permit, as approved pursuant to Permit Conditions III.10.H.5.a. through d., and III.10.H.5.f. [Sections III.10.H.1.a.i, III.10.H.1.a.ii, III.10.I.1.a.i, III.10.I.1.a.ii, Table III.10.E.L, Chp. 4E, Tables 4E-3 and 4E-4, DWP]

Table 3-35 LOP Bulge Secondary Containment

Room/Area	Approximate Room/Area Dimensions (LxW feet)	Miscellaneous Treatment Units or Tanks in Room/Area (Largest Plant Item)	Volume Largest Plant Item in Room/Area (US Gallons)	Minimum Secondary Containment Height (feet)
LOP-BULGE-00001/L-0202 LOP-BULGE-00002/L-0202	Secondary containment for ancillary equipment, no minimum liner height required.			

Table 3-36 LOP Bulges Sump/Floor Drain Dimensions, Construction and Design Documents

Sump/Leak Detection Box or Floor Drain/Line I.D.#, Room and Elevation	Sump/Leak Detection Box or floor Drain/Line Dimensions (approximate) and Materials of Construction
LOP-FD-00001 Floor Drain/L-0123 (LOP-BULGE-00001 Drain, El. 3 ft.)	2” Dia., 6% Molybdenum
LOP-FD-00002 Floor Drain/L-0124 (LOP-BULGE-00002 Drain, El. 3)	2” Dia., 6% Molybdenum

Basis Discussion: Important containment features are delineated and described in these appendices with some specifics covered by construction requirements identified in this document.

Verification: Construction/installation verification is expected to be achieved through the following:

Verif. Method	Verif. By	Plan	Notes/Comments
R	**ENG**	Review as-built drawings of the drawings and specification listed in the requirement.	
I	**ENV**	Perform a permitted facility and system inspection of DMWU system to verify construction and installation is in compliance with the permitted design.	

3.11.13.2 Support and Protection

Requirement: The Permittees must ensure the LOP bulges are supported and protected against physical damage and excessive stress due to settlement, vibration, expansion, or contraction [WAC 173-303-640(3)(f), in accordance with WAC 173-303-680(2) and (3)]. [Section III.10.H.1.a.vii, DWP]

Basis Discussion: This requirement is derived from the Washington Administrative Code (WAC) Dangerous Waste Regulations at WAC Chapter 173-303, specifically the Tank System regulations in WAC 173-303-640.

These regulatory requirements have been incorporated into the Dangerous Waste Permit, WTP- Operating Unit Group 10, WA 7890008967, as permit condition III.10.H.1.a.vii.

Verification: Construction/installation verification is expected to be achieved through the following:

Verif. Method	Verif. By	Plan	Notes/Comments
R	**ENV**	Review completed installation packages and nonconformance reports and construction deficiency reports to confirm the plant was constructed in accordance with the approved designs, plans and specifications.	

3.11.13.3 Prevention of Escaping Emissions

Requirement: For each LAW Vitrification System sub-system holding dangerous waste which are acutely or chronically toxic by inhalation, the Permittees will operate the system to prevent escape of vapors, fumes or other emissions into the air [WAC 173-303-806(4)(i)(i)(B) and WAC 173-303-640(5)(e), in accordance with WAC 173-303-680]. [Section III.10.H.1.a.xxix, DWP]

Basis Discussion: This requirement is derived from the Washington Administrative Code (WAC) Dangerous Waste Regulations at WAC Chapter 173-303, specifically the Tank System regulations in WAC 173-303-640. These regulatory requirements have been incorporated into the Dangerous Waste Permit, WTP- Operating Unit Group 10, WA 7890008967, as permit condition III.10.H.1.a.xxix.

Verification: Construction/installation verification is expected to be achieved through the following:

Verif. Method	Verif. By	Plan	Notes/Comments
R	**ENV**	Review as-built P&IDs to verify the system has a vapor collection system and has been constructed according to the design.	

3.11.14 LOP/LVP Aboveground Piping

Requirement: Tank system above ground piping shall be constructed of the materials specified in the approved design. [Sections III.10.C.10.a, III.10.C.9.c, III.10.E.2.a, DWP]

Basis Discussion: The requirement to verify the materials for above ground piping is a direct request for ecology to certify the materials in use for the piping.

Verification: Construction/installation verification is expected to be achieved through the following:

Verif. Method	Verif. By	Plan	Notes/Comments
R	**ENV**	Review of construction and installation will be accomplished through the 24590-WTP-GPG-ENG-087, *Statistical Sampling Methods of Engineering Quality Monitoring and Inspection.*	

3.12 Relevant Codes and Standards

3.12.1 Codes of Record

Table 3-37 identifies relevant external codes and standards applicable to the LOP and LVP design. Use of 24590-WTP-COR-MGT-15-00001, *Engineering, Procurement, and Construction (EPC) Code of Record* (EPC Code of Record), is typically invoked in the design process through the documents identified in Section 3.12.2. Beyond inclusion here, no attempt is made in this document to extract individual design requirements from the EPC Code of Record for allocation to SSCs.

In some cases, the expected means of verification may be established on the basis of tests or other criteria required by the codes and standards. This does not necessarily include verification or testing more appropriately defined in the procurement of individual sub-systems or components, or verification or testing that is a routine activity defined by specifications and (or) procedures used by construction and startup.

Table 3-37 LOP and LVP Applicable Codes and Standards

Implementing Codes and Standards: [EPC Code of Record]	
Document Number	**Title**
ANSI/ANS 58.8-1994	*Time Response Design Criteria for Safety-Related Operator Actions*[2]
ANSI/ISA-67.04.01-2006	*Setpoints for Nuclear Safety-Related Instrumentation*, as tailored in Appendix C of the SRD[2]
ANSI/ISA-S84.01 (1996)	*Application of Safety Instrumented Systems for the Process Industries*[1]
ANSI K61.1	*American National Standard Safety Requirements for the Storage and Handling of Anhydrous Ammonia*[1]
ASME AG-1	*Code on Nuclear Air and Gas Treatment*[2]
ASME B31.3 (1996)	*Process Piping*, as tailored in Appendix C of the SRD[1]
ASME Boiler and Pressure Vessel Code, Section IX	*Welding and Brazing Qualifications*[1]
ASME Boiler and Pressure Vessel Code, Section VIII, Divisions 1 and 2	*Rules for Construction of Pressure Vessels*[1]
ASME N509	*Nuclear Power Plant Air-Cleaning Units and Components*[1]
ASME N510 (1995)	*Testing of Nuclear Air Cleaning Systems*[2]
ASME PTC 10	*Performance Test Codes on Compressors and Exhausters*[1]
AWS D1.1	*Structural Welding Code—Steel*[1]
AWS D1.3	*Structural Welding Code—Sheet Steel*[1]
AWS D1.6	*Structural Welding Code— Stainless Steel*[1]
AWS D14.6	*Specification for Welding of Rotating Elements of Equipment*[1]
AWS D9.1	*Sheet Metal Welding Code*[1]
DOE-STD-1020-94, Change 1 (1996)	*Natural Phenomena Hazards Design and Evaluation Criteria for Department of Energy Facilities*, as tailored in Appendix C[2]
IEEE 1023 (1988)	*IEEE Guide for the Application of Human Factors Engineering to Systems, Equipment and Facilities of Nuclear Power Generating Stations*

Table 3-37 LOP and LVP Applicable Codes and Standards

Implementing Codes and Standards: [EPC Code of Record]	
Document Number	**Title**
IEEE 323 (1983)	*Standard for Qualifying Class 1E Equipment for Nuclear Power Generating Stations*, as tailored in Appendix C of the SRD[2]
IEEE 338 (1987)	*IEEE Standard Criteria for the Periodic Surveillance Testing of Nuclear Power Generating Station Safety Systems*, as tailored in Appendix C of the SRD[1]
IEEE 344 (1993)	*IEEE Standard for Seismic Qualification of Equipment for Nuclear Power Generating Stations*, as tailored in Appendix C[2]
IEEE 382 (1996)	*IEEE Standard for Qualification of Actuators for Power-Operated Valve Assemblies with Safety-Related Functions for Nuclear Power Plants*, as tailored in Appendix C[2]
IEEE 384 (1992)	*IEEE Standard Criteria for Independence of Class 1E Equipment and Circuits*, as tailored in Appendix C of the SRD[1]
IEEE 497 (2002)	*IEEE Standard Criteria for Accident Monitoring Instrumentation for Nuclear Power Generating Stations*, as tailored in Appendix C of the SRD
IEEE 628	*IEEE Standard Criteria for the Design, Installation, and Qualification of Raceway Systems for Class 1E Circuits for Nuclear Power Generating Stations*[1]
ISO 1940-1 (2003)	*Mechanical Vibration — Balance Quality Requirements for Rotors in a Constant (Rigid) State — Part 1: Specification and Verification of Balance Tolerances*[1]
ISO/TR 13763	*Safety and Performance Criteria for Seamless Gas Cylinders*[1]
ISO-4706	*Gas Cylinders — Refillable Welded Steel Cylinders — Test Pressure 60 Bar and Below*[1]
NEMA 250	*Enclosures for Electrical Equipment (1000 Volts Maximum)* [1]
NFPA 70 (1999)	*National Electrical Code*[1]
UBC	*Uniform Building Code*[1]
WAC 173-303	*Dangerous Waste Regulations*
WAC 173-400	*General Regulations for Air Pollution Sources*
WAC 173-460	*Controls for New Sources of Toxic Air Pollutants*
WAC 246-247-040	*Radiation Protection—Air Emissions – General Standards*

[1] The LAW Facility DSA specifies that design of selected portions of the LOP/LVP system per this code or standard is a credited design feature to help ensure the robustness of the design in support of the nuclear safety hazards analysis and selection of controls.
[2] This code or standard from the SRD applies to components of the LOP/LVP system that have a safety function.

3.12.2 WTP Design Criteria, Design Guides, and General Specifications

Table 3-38 identifies relevant discipline design criteria, guides, and general specifications applicable to the LOP and LVP systems. Use of these documents to develop the detailed design of SSCs is governed by engineering procedures. Most requirements, contained within this document are derived from external codes and standards, or are specified methods and approaches to achieve standardization and consistency of design. Beyond inclusion here, no attempt is made in this document to extract individual design requirements from these documents for tracing and verification, or to define how direction provided by these documents is applicable and allocated (or not) to individual SSCs.

Table 3-38 WTP Design Guides, and General Specifications Applicable to LOP and LVP

Document Number	Title
Design Criteria Documents	
24590-WTP-DC-M-06-001	*Mechanical Systems Design Criteria*
24590-WTP-DC-E-01-001	*Electrical Design Criteria*
24590-WTP-DC-E-06-002	*Design Criteria for Independence of Safety Equipment and Circuits*
24590-WTP-DC-ENG-06-001	*Design Criteria for Environmental and Natural Phenomena Hazard Qualification of Structures, Systems and Components*
24590-WTP-DC-PS-01-001	*Pipe Stress Design Criteria Including "Pipe Stress Criteria" and "Span Method Criteria"*
24590-WTP-DC-PS-01-002	*Pipe Support Design Criteria*
24590-WTP-DC-ST-04-001	*Seismic Analysis and Design Criteria*
Design Guides	
24590-WTP-GPG-ENG-004	*Pipe Stress, Pipe Layout and Support Spacing*
24590-WTP-GPG-ENG-005	*Engineering Design Guide for Pipe Support*
24590-WTP-GPG-ENG-086	*Equipment Environmental Qualification*
24590-WTP-GPG-ENG-0094	*Pipe Design Work Process*
24590-WTP-GPG-ENG-0099	*Design Verification of Plant Design Deliverables*
24590-WTP-GPG-ENG-0103	*Equipment Seismic Qualification*
24590-WTP-GPG-ENG-0109	*Accessibility Review of Equipment and Components*
24590-WTP-GPG-ENG-0118	*Piping Component Stock Codes*
24590-WTP-GPG-ENG-0119	*Isometric Drawings Production*
24590-WTP-GPG-ENG-0127	*Processing Engineering Calculations*
24590-WTP-GPG-ENG-0140	*Hot Pipe Penetrations Through Concrete*
24590-WTP-GPG-ENG-0141	*WTP Radiation Damage Thresholds for Non-Metallic Materials*
24590-WTP-GPG-ENG-0144	*Piping Interface with Flexible Equipment-Stress Analysis Design Guide*
24590-WTP-GPG-ENG-0145	*SC-IIIE Piping - Stress Analysis Design Guide*
24590-WTP-GPG-ENG-0146	*Piping Coating System Selection Guide*
24590-WTP-GPG-ENG-0149	*Piping Classification Guide*
24590-WTP-GPG-ENG-0150	*Plant Design/Mechanical Systems Equipment Interfaces: Terminal End Equipment*
24590-WTP-GPG-ENG-0153	*Safety Instrumentation - Independent Protection Layer Identification*
24590-WTP-GPG-ENG-0159	*Single Failure Analysis Process for Mechanical, HVAC, Safety Class Fire Barriers and Control Systems*
24590-WTP-GPG-ENG-0165	*Pipe Stress and Supports Confirmation*
24590-WTP-GPG-J-005	*Control Systems Interfaces*
24590-WTP-GPG-J-014	*Control Systems Design Process Guide*
24590-WTP-GPG-J-015	*Safety Instrumented System Implementation*
24590-WTP-GPG-J-016	*Control Valve Sizing*
24590-WTP-GPG-J-017	*WTP Seismic Category Application to C&I Systems*
24590-WTP-GPG-J-0057	*Setpoint Calculations*
24590-WTP-3DG-M11T-00001	*Hydraulic Seals*

Table 3-38 WTP Design Guides, and General Specifications Applicable to LOP and LVP

Document Number	Title
24590-WTP-GPG-M-011	*Pipe Sizing for Compressible Flow*
24590-WTP-GPG-M-012	*Pump Net Positive Suction Head*
24590-WTP-GPG-M-013	*Plant Wash System Design*
24590-WTP-GPG-M-016	*Pipe Sizing for Lines with Liquids Containing Solids - Bingham Plastic Model*
24590-WTP-3DG-M40T-00001	*Design Parameters and Test Pressures for Equipment and Piping*
24590-WTP-GPG-M-019	*Vessel Sizing*
24590-WTP-GPG-M-022	*Liquid and Vapor Line Sizing by Formula*
24590-WTP-GPG-M-023	*Other Losses in Piping Systems*
24590-WTP-GPG-M-027	*Recommended Slopes for Piping Systems*
24590-WTP-GPG-M-028	*Vent, Drain, and Root Valve Sizing and Selection for Piping Systems*
24590-WTP-GPG-M-032	*Vessel Overflow and Gravity Line Sizing*
24590-WTP-GPG-M-036	*Subcomponent Safety Classification Process*
24590-WTP-GPG-M-047	*Preparation of Corrosion Evaluations*
24590-WTP-GPG-M-050	*Pressure Vessel and Heat Exchanger Design*
24590-WTP-GPG-M-052	*Specifying Design Cycles for Equipment and Piping*
24590-WTP-3DG-M11T-00003	*Minimum Flow Velocity for Slurry Lines*
24590-WTP-GPG-M-0059	*Avoiding Chemical Line Plugging - Plant Design Considerations*
24590-WTP-GPG-M-0061	*Vessel Structural Analysis and ASME Section VIII Evaluation*
24590-WTP-GPG-PL-002	*Plant Design Material Control Guide*
24590-WTP-GPG-PR-004	*Preparation of Process Corrosion Data Sheets*
24590-WTP-GPG-SRAD-001	*Design Guide for ALARA*
Specifications	
24590-WTP-3PS-FB01-T0001	*Engineering Specification for Structural Design Loads for Seismic Category III & IV Equipment and Tanks*
24590-WTP-3PS-G000-T0002	*Engineering Specification for Positive Material Identification (PMI) for Shop Fabrication*
24590-WTP-3PS-G000-T0015	*Engineering Specification for Environmental Qualification of Mechanical Equipment*
24590-WTP-3PS-JQ00-T0004	*Engineering Specification for Management of Supplier Software*
24590-WTP-3PS-JQ00-T0005	*Engineering Specification for Management of Supplier Safety Software*
24590-WTP-3PS-JQ06-T0005	*Engineering Specification for Environmental Qualification of Control and Electrical Systems and Components*
24590-WTP-3PS-JQ07-T0001	*Engineering Specification for Instrumentation for Packaged Systems*
24590-WTP-3PS-JQ08-T0001	*Engineering Specification for Construction and Installation of Controls and Instrumentation*
24590-WTP-3PS-MACS-T0004	*Engineering Specification for Single Stage High Integrity Centrifugal Fans and Blowers (AG-1)*
24590-WTP-3PS-MVB2-T0001	*Engineering Specification for Welding of Pressure Vessels, Heat Exchangers and Boilers*
24590-WTP-3PS-MV00-T0001	*Engineering Specification for Pressure Vessel Design and Fabrication*

Table 3-38 WTP Design Guides, and General Specifications Applicable to LOP and LVP

Document Number	Title
24590-WTP-3PS-MV00-T0002	*Engineering Specification for Seismic Qualification Criteria for Pressure Vessels*
24590-WTP-3PS-MV00-T0003	*Engineering Specification for Pressure Vessel Fatigue Analysis*
24590-WTP-3PS-NWP0-T0001	*Engineering Specification for General Welding and NDE Requirements for Supplier Fabricated Piping*
24590-WTP-3PS-PB01-T0001	*Engineering Specification for Technical Supply Conditions for Pipe, Fittings, and Flanges*
24590-WTP-3PS-PH01-T0001	*Engineering Specification for Technical Supply Conditions 'QL' Pipe Supports*
24590-WTP-3PS-PS02-T0001	*Engineering Specification for Shop Fabrication of Piping*
24590-WTP-3PS-SS00-T0001	*Engineering Specification for Welding of Structural Carbon Steel*
24590-WTP-3PS-SS00-T0002	*Engineering Specification for Welding of Structural Stainless Steel and Welding of Structural Carbon Steel to Structural Stainless Steel*

4 System Description

This section summarizes design output information, describing the current deign and the operational and maintenance aspects of the system. The information provided below does not contain design requirements and should not be used as design input. The description of the current design contained in this section may not fully align with design requirements. This is acceptable within the context of this document. Areas of misalignment are to be resolved through appropriate mechanisms and the SDD updated to reflect changes made to the design. Changes to the descriptive text will be made following the changes to the lower tiered Engineering documents.

4.1 Configuration Information

Note: The process conditions described below are nominal operating parameters (unless otherwise noted) to provide the necessary context for description of system, subsystem and major components. The nominal operating values are not to be used directly for input to the design or design analysis of safety functions related to SSCs.

Design details associated with the incorporation of the DFLAW operating configuration have not been included in Section 4 of this document now. Section 4 will be updated to include DFLAW content later once the detailed design process for DFLAW has been completed.

The LOP/LVP systems are designed to collect, cool, and treat the offgas from the LAW melters so that offgas stream conforms to relevant federal, state, and local air emissions requirements at the point of discharge from the facility exhaust stack. The system includes ALARA design features and the best available control technologies (BARCT and BACT).

The offgas stream generated during the vitrification of melter feedstock consists of air (from controlled in leakage), steam (evaporation of feed moisture and hydroxide decomposition), gases (e.g., carbon dioxides, nitrogen oxides, sulfur oxides, hydrogen chloride, hydrogen fluoride from thermal decomposition of salts and organic material), aerosols and particulate (from dried melter feed before melting), mercury and iodine (volatilizing from glass melt), and radioactive material. The LOP/LVP piping and treatment unit boundary, combined with the motive force of the LVP exhausters, ensures confinement of the offgas stream from the melter discharge points at the film coolers through the facility exhaust stack. The LAW Facility contains two melters.

The LOP system thus contains two parallel trains to deal with the offgas from each melter. The two LOP train flows are combined in the LVP portion of the system. In addition to drawing on both melters, the LOP/LVP system is also attached to the process vessel vent (drawing on vessels LCP-VSL-00001/00002, LFP-VSL-00001/00002, LVP-VSL-00003, and RLD-VSL-00003/00004/00005). A diagram of the system is provided in Figure 4-1.

When processing feed during normal operation, the liquid feed cools a lens of glass at the surface of the melt pool, called the cold cap. Radioactive components in the feed are gradually incorporated into the glass in the cold cap. Vigorous boiling of the waste feed off the cold cap and bubbler action in the melter kick up particulate matter and aerosols into the melter plenum space. Heat decomposes various volatile and semi volatile compounds and releases those into the melter plenum. Nitrogen oxides (NOx) are released from decomposition of nitrates and nitrites in the waste feed. Other acid gases are also released into the offgas stream. The LOP/LVP system draws on the melter to confine and ensure treatment of the radioactive and toxic components in the offgas stream. During upset conditions where the feed is stopped, a 2 hr. window of time is allowed for the complete decomposition of the cold cap and stabilization of the glass pool. After the cold cap disappears, the volatile and radioactive hazard is minimized. Should a loss of power event occur, the exhausters have a battery backup UPS system to maintain offgas system vacuum for the 2 hr. cold cap burn off duration.

The scope of the LOP system covers the post melter primary offgas system including film coolers, SBSs, SCVs, WESPs. The scope of the subsequent LVP system covers the HEPA preheaters, HEPA filters, carbon bed adsorbers, SCO/SCR (and associated heater), caustic scrubber, caustic collection tank, vacuum exhausters, and the discharge stack.

The purpose of the LOP system is to cool the offgas, reduce the acid gases generated by the melter, and remove aerosols and particulate matter. This is done through the wet scrubbing and electrostatic precipitation processes. The purpose of the successive LVP system is to remove the remaining particulates and radioactivity, mercury, VOCs, nitrogen oxides, iodine and acid gases through HEPA filtration, adsorption, oxidation/reduction, and caustic scrubbing.

The LOP/LVP system confines and directs melter offgas from the melter through the exhaust stack. The negative pressure of the LOP/LVP system relative to the surrounding facility up to the exhausters prevents exfiltration of offgas into the potentially occupied workspaces adjacent to the offgas system. The exhaust system is thus important to protect the facility workers from the noxious and radioactive components in the offgas stream. The system is designated SS to protect the facility worker from the nitrogen oxide hazard in the offgas stream and to ensure an elevated release through the stack to protect the co-located workers located outside the plant. Interface with a UPS system ensures exhauster operability and flow through the offgas system until the hazards of a melter cold cap burn off are eliminated.

4.1.1 Description of System, Subsystems, and Major Components

A diagram of the LOP/LVP system is provided in Figure 4-1.

Figure 4-1 Diagram for LOP/LVP Systems

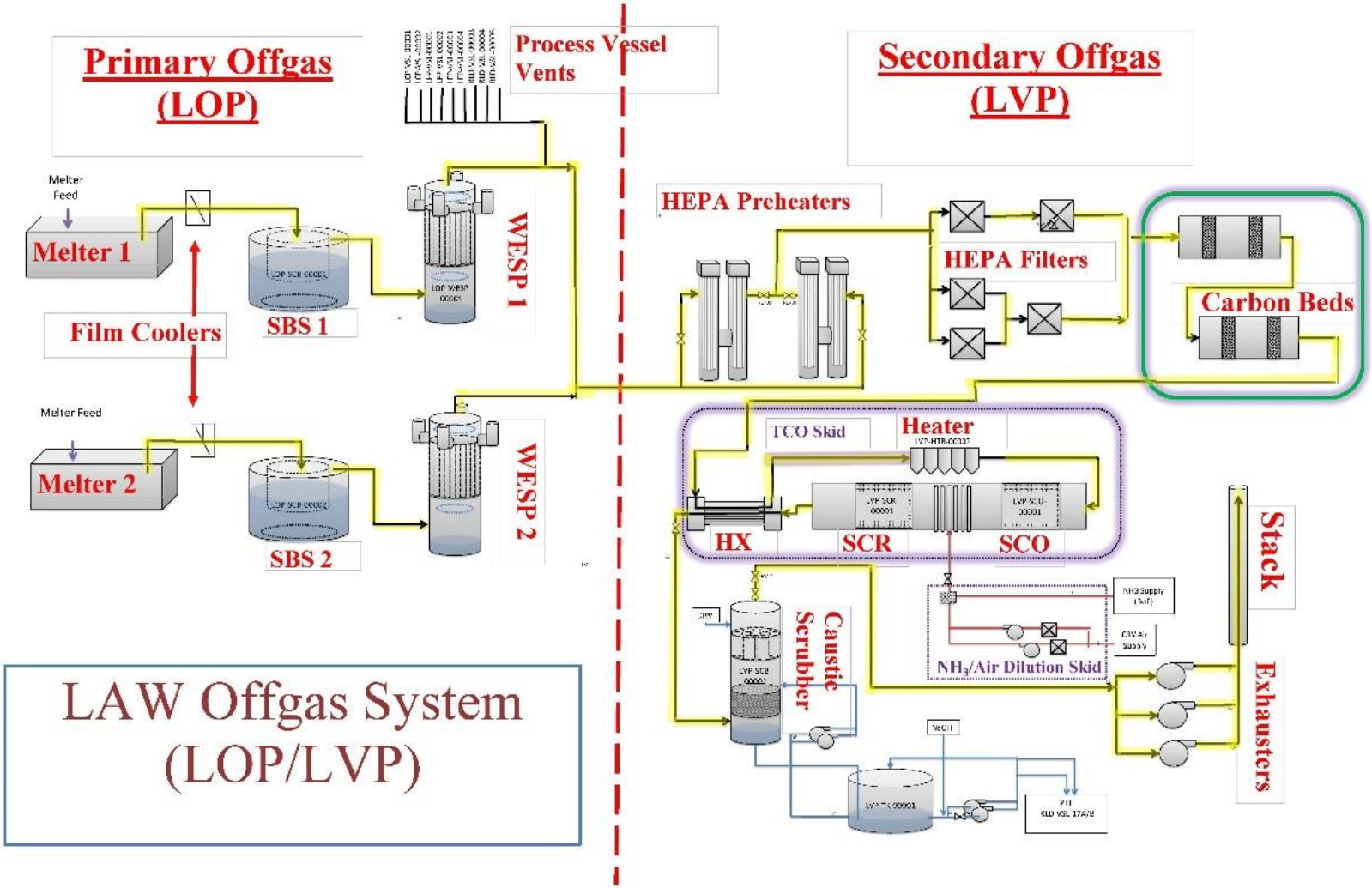

The LOP portion of the offgas system consists of the following major components:

- Film coolers and offgas
- SBS vessels (LOP-SCB-00001/00002)
- SBS condensate collection vessels (LOP-VSL-00001/00002)
- WESPs (LOP-WESP-00001/00002)

The LVP portion of the offgas system consists of the following major components.

- HEPA filter electric preheaters (LVP-HTR-00001A/00001B/00003A/00003B) – note: LVP heaters LVP-HTR-00001B/-00003B are abandonded in-place.
- HEPA filters (LVP-HEPA-00001A/00002A/00003A) and an auxiliary train (LVP-HEPA-00001B/00002B)
- Mercury mitigation equipment skid (LVP-SKID-00001)
  - Activated carbon adsorber vessels (LVP-ADBR-00001A/00001B)
- SCO/SCR skid (LVP-SKID-00002)
  - Recuperative heat exchanger (LVP-HX-00001)
  - Electric heater (LVP-HTR-00002)
  - SCO (LVP-SCO-00001)
  - SCR (LVP-SCR-00001)
- Ammonia dilution skid (LVP-SKID-00003)
- Caustic scrubber (LVP-SCB-00001)
- Exhausters (LVP-EXHR-00001A/00001B/00001C)

Associated piping, valves, and interfaces with other systems are described with each major piece of equipment.

4.1.1.1 LOP Component Descriptions

4.1.1.1.1 Film Coolers and Offgas Pipe/Spool Pieces to SBS

Refer to P&IDs: 24590-LAW-M6-LOP-00001005 (melter 1)
24590-LAW-M6-LOP-00002005 (melter 2)
24590-LAW-M6-LOP-00004001 (melter 1)
24590-LAW-M6-LOP-00004002 (melter 1)
24590-LAW-M6-LOP-00005001 (melter 2)
24590-LAW-M6-LOP-00005002 (melter 2)

Refer to calculation: 24590-LAW-M6C-LOP-00004 (line sizing)
24590-LAW-M6C-LOP-00007 (emergency air inbleed line pressure drop)

Each melter is equipped with a primary and standby film cooler (LOP-FCLR-00001/00002 for melter 1, LOP-FCLR-00003/00004 for melter 2). The primary line is a 10-in. diameter, Inconel 625 pipe to the SBS for normal melter operation. The standby line can be activated in the event of a blockage in the primary line to provide a second path to the SBS. The standby is intended for maintenance and mitigation of blockage only. The standby film cooler is not designed to support melter feeding.

Primary Film Cooler

When a cold cap is present, the offgas exits the melter at approximately 750°F and is mixed with injection air in a primary offgas film cooler (LOP-FCLR-00001/00003). The primary offgas film cooler cools the offgas below the glass sticking temperature to minimize solids deposition on the offgas piping walls. This film cooler is a double-walled pipe designed to introduce air along the walls through a series of 10 slots in the inner wall and perimeter holes to cool the outside surfaces (refer to Figure 4-2). The injection air that flows along the pipe wall mixes with, and cools, the offgas to approximately 550°F. An offgas velocity of greater than 50 ft./sec is normally maintained between the melter and the SBS. This velocity helps minimize solids deposition within the primary offgas film cooler and offgas line. A supply of cooling air provides the baseline cooling, which is mixed with pressure control air before the film cooler.

When the melter is idled, causing the plenum temperature to rise, the injection air in the primary offgas film cooler provides cooling to approximately 1110°F to prevent thermal damage to this film cooler and downstream equipment.

Figure 4-2 Primary Film Cooler

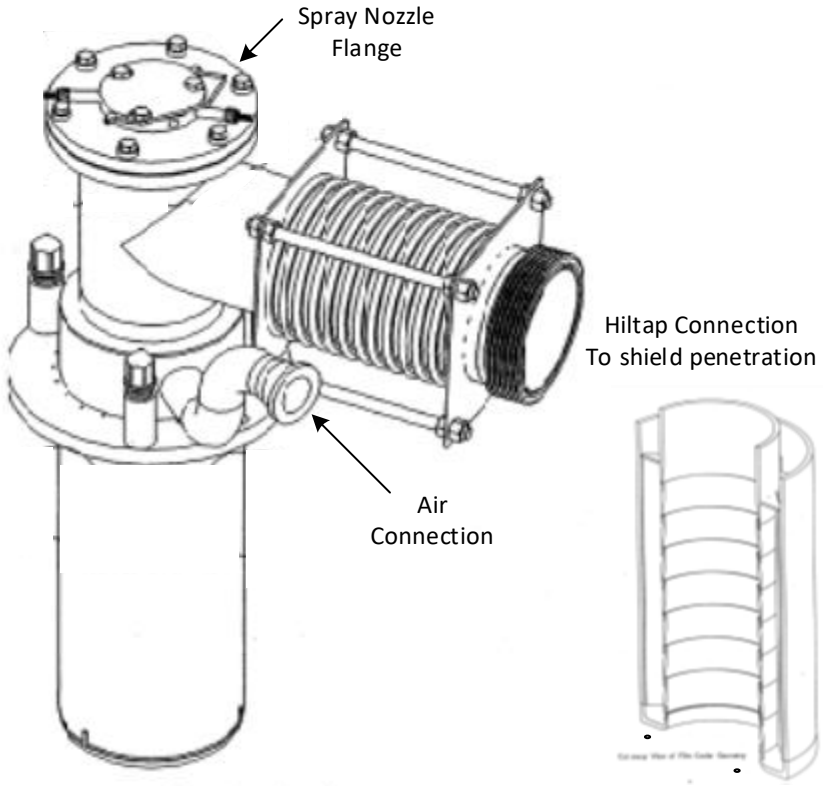

Standby Film Cooler

The standby film cooler maintains the flowpath for the standby vent line. A single slot is provided to distribute air to the standby line (refer to Figure 4-3). The slot does not direct the air in either direction. The air normally flows to the melter plenum to purge the line and redirect any deposits. On high-high melter pressure, the standby valve opens providing a second path from the melter to the SBS. Below the single slot, a cast ceramic spacer is

provided. The ceramic is resistant to the radiant heat and thermal cycles from the melter plenum. The air supply is set by a manual valve and has no automatic features, except that all air is stopped by the PPJ system in a high-high pressure interlock. In addition, if the standby line gets too hot, a valve opens to allow air from the wet process cell (WPC) to be drawn back through the standby film cooler into the SBS. In normal operation, use of the standby line would be limited to momentary operation and then return to the primary flowpath. As with all melter inserts, small inbleed holes in the connecting flange allow air to purge and cool the gap between the insert and the lid penetration.

Figure 4-3 Standby Film Cooler

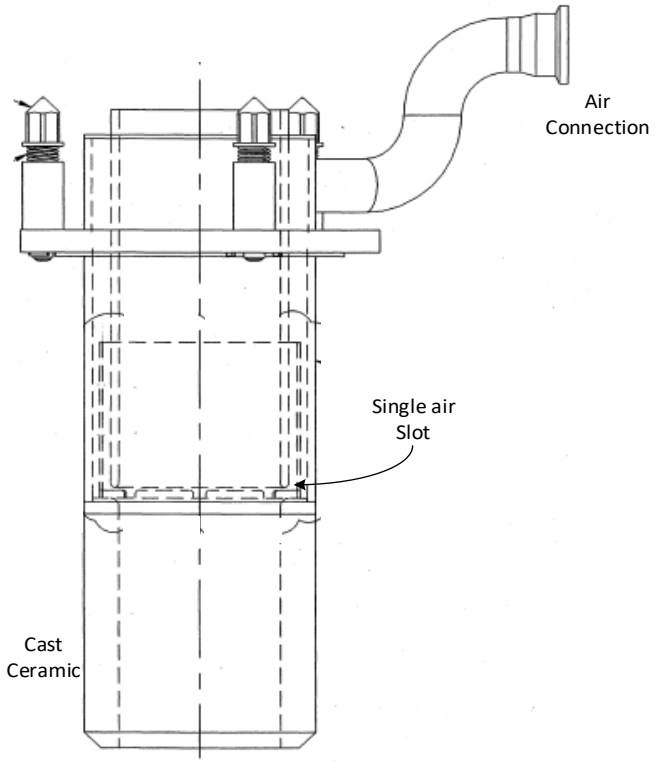

Film Cooler Cleaning

The top flange of each film cooler assembly includes spray nozzles to water wash the film cooler and the offgas pipe. The cleaner for the standby film cooler has a third connection for a melter pressure measurement. Cleaning will occur on a set periodic basis during operation. A slit pipe extends down into the film cooler louver area and water is sprayed on the cooler to wash off any accumulations. A second spray nozzle is directed down the offgas line toward the SBS. An air purge keeps the nozzles open when water is not present. The slit pipe configuration provides four, 2 in. long by 0.015 in. wide slots, spaced at 90° radially. Four sets of slots are spaced every 4 in. Each set of slots is offset by 45°.

The primary film cooler is washed at least once a day and whenever there is a high or increasing differential pressure (DP) across the film cooler. This value is not measured directly, but it can be tracked from the melter pressure and the SBS pressure; both are measured redundantly.

Component Access

The film coolers, spray nozzle assemblies, and the expansion bellows are within the melter shield lid. They are located under the two-shield lid offgas covers. Each cover is a water-cooled stainless steel polygon, 2 in. thick. The big cover has a round water cooler cover directly over the top of the film cooler for access to the spray nozzle assembly. The area near the film cooler is also equipped with water cooled panels. The plenum wall cooling is supplied in parallel with these panels. Separate hoses and quick connects allow for the removal of the two covers.

Offgas Line Penetrations

Each of the offgas lines must pass through the melter shielded lid and through the concrete wall (2 ft. thick) between the melter gallery and the WPC. The wall box penetrations use mineral wool insulation to protect the walls from the high temperature of the offgas. The 10 in. offgas line is connected with HILTAP™ connectors. The offgas pipe is welded to the penetration housing at one place to allow for thermal expansion, which is taken up by the multiple bellows in the line. The shielded lid penetration was designed and fabricated as part of the melter. The wall penetrations were designed and fabricated with the pipe spools. The wall penetrations are numbered LOP-WBOX-00001/00003 for the primary, and LOP-WBOX-00002/00004 for the standby.

Offgas Spool Pieces

The piping connecting the film coolers to the respective SBS is composed of a series of spool pieces for disassembly for melter change or maintenance (removable spools LOP-SPOOL-00001/00002/00003/00004/00005/00006/00007/00008). These spools are 10 in. in diameter. The spools are designed to handle flow variations up to seven times the normal steam generation rate and up to three times the normal noncondensable gas generation rate from the melter feed without causing interruption of the melter operation. An analysis of the frequency and magnitude of these surges is provided in report 24590-LAW-RPT-ML-04-0001, *Surges in LAW Melter*. The spools and wall penetrations have a design temperature of 1110°F. Each spool is fabricated from Inconel 625. Bellows are incorporated in each pipe segment to accommodate thermal expansion. The spools rise vertically from the film cooler and then slope downward to the SBS.

Maintenance Bypass Line and Emergency Vents

The offgas pipes from the standby film coolers to each SBS are connected with a maintenance bypass line that penetrates the wall to the two WPCs. A valve on this bypass line (LOP-YV-1002) is normally closed, preventing cross communication between the two LOP trains. The valve can be opened to allow for maintenance on LOP components on either side. When the maintenance valve is open, the offgas flow from both idling melters is drawn through one side of the LOP dual train system. The side being maintained in the LOP system is isolated from exhauster vacuum by other downstream valves in the same train to ensure the melter offgas is ventilated by the opposite side.

The bypass line is equipped with a special relief device on each end, near the standby lines to the two SBS vessels. The relief device will only lift if the corresponding melter experienced an abnormal pressurization event that overwhelmed the melter plenum and LVP header pressure controls. The cracking pressure is 10 in. water gauge (WG), due to the weight and the lift area of the plate. A housing guides the plate back into the sealed position. The relieve device vents to the WPC air during the pressure transient and then reseals. The C5 ventilation system (C5V) confines and mitigates the release.

4.1.1.1.2 Melter Pressure Control Subsystem

Refer to P&IDs: 24590-LAW-M6-LOP-00004001 (melter 1)

24590-LAW-M6-LOP-00004002 (melter 1)
24590-LAW-M6-LOP-00005001 (melter 2)
24590-LAW-M6-LOP-00005002 (melter 2)
24590-LAW-M6-LOP-00001004 (WESP 1)
24590-LAW-M6-LOP-00001005 (melter 1 film cooler)
24590-LAW-M6-LOP-00002004 (WESP 2)
24590-LAW-M6-LOP-00002005 (melter 2 film cooler)

A primary function of the LOP system is to control the melter plenum pressure. Control air is introduced into the primary offgas film cooler (LOP-FCLR-00001/00003) to adjust pressure while maintaining a relatively constant flow of noncondensable gas. If the melter vacuum moves from the normal control setpoint, the flow of control air is adjusted to return the plenum pressure to the setpoint. Changes to the control airflow rate are in turn used to adjust the opening of the offgas flow control valve downstream of the WESP (LOP-FV-1140, LOP-FV-2140). If the offgas generation rate begins to exceed the capacity of the primary line, the melter vacuum decreases. The control airflow rate decreases accordingly, which in turn causes the valve at the WESP to open, allowing more melter offgas flow.

Injection air is also supplied to a standby offgas film cooler (LOP-FCLR-00002/00004), which normally vents through the primary offgas film cooler via the melter plenum. The injection air minimizes solids deposition in the standby offgas film cooler. There is only one slot and a refractory shield in the standby film cooler. If any plugging or blockage by particulate deposits occurs in the primary film cooler, thereby reducing the effective flowpath and associated melter plenum vacuum, a secondary path to restore vacuum is available through the standby film cooler. When a low vacuum setpoint is reached in the melter plenum, a butterfly valve (LOP-YV-1008/2008) in the standby offgas line automatically opens to permit offgas flow through the standby offgas film cooler to the SBS, thereby supplementing the primary offgas film cooler in restoring the vacuum in the melter plenum. The offgas is subjected to normal offgas treatment while the feed to the melter is terminated.

Once the upset condition is corrected and melter vacuum is re-established at the normal control setpoint, the standby line is isolated by closing the butterfly valve. When flow is returned exclusively through the primary system, melter feed can be re-initiated.

If the melter pressurizes above 10 in. WG, a relief device opens to allow the melter to vent to the WPC and associated C5V system. The relief device could be activated during normal operations; therefore, personnel access is not allowed in the cell unless the melter is idled due to the nitrogen oxide hazard. Once the melter pressure is below the relief setpoint, the relief device closes.

The idle melter condition is defined by melter feed off and no gas generation. This also means the plenum temperature rises to near the glass temperature because there is no insulating cold cap on the glass surface. Pressure control is maintained; however, there are few variations in flow or pressure. Film cooler flow is maintained to limit the temperature rise at the offgas line. The return to operations from idle is started with water feed to the melter. Steam generation is limited by film boiling as the water cools the plenum to prepare for feed slurry. Cooling the plenum first limits the pressure fluctuations at the start of feed so that the pressure control system can maintain vacuum.

4.1.1.1.3 Submerged Bed Scrubbers

Refer to P&IDs: 24590-LAW-M6-LOP-00001001 (melter 1)
24590-LAW-M6-LOP-00002001 (melter 2)

Refer to datasheets: 24590-LAW-MKD-LOP-00008

There are two SBSs, one for each melter. The SBS vessels are positioned in the WPC as close to their respective melter as reasonably possible. The purpose of the SBSs are to quench and cool the melter offgas stream and to remove particulates and aerosols from the offgas stream. Offgas/liquid contact occurs in a packed bed of ceramic spheres inside the SBS vessels. The bed is removable.

Offgas from the film coolers enters a packed bed column enclosed by an SBS (LOP-SCB-00001/00002) for further cooling. Each melter has a dedicated SBS. The SBS is a passive device designed for aqueous scrubbing of entrained radioactive particulates and removal of aerosols from melter offgas.

The SBS has two offgas inlet lines—one for normal operations and one for standby. The inlet pipes run down through the bed to the packing support plate. The bed retaining walls extend below the support plate, creating a lower skirt to prevent gas from bypassing the packing. A hold-down screen is used to prevent the bed from being carried out by upward flow through the bed. The packing consists of 1 in. diameter ceramic spheres. Gas bubbles are formed as the gas passes through holes in the support plate. The bubbles rise through the packed bed and cause the liquid to circulate up through the packing, and hence downward in the annular space outside the packed bed. The packing breaks larger bubbles into smaller ones to increase the gas-to-water contact area and helps increase the particulate removal and heat transfer efficiencies.

The SBS has an offgas inlet flow rate of approximately 1470 standard cubic feet per minute (SCFM) at 600°F and −10 in. WG. The SBS is cooled through an exterior half-pipe jacket and two concentric cooling coils in the vessel. Cooling is supplied from the CHW system to maintain the scrubbing liquid at a nominal temperature of 122°F. The liquid temperature controls the offgas outlet temperature, which maintains the SBS at saturated conditions.

Water vapor in the melter offgas condenses in the SBS. The SBS vessel has two overflow pipes to its associated SCV (LOP-VSL-00001/00002). Centrifugal pumps recirculate liquid from the SCV back to the SBS through piping and valves in bulge LOP-BULGE-00001/00002. The liquid is recirculated through a distribution header with lances in the bottom of the SBS vessel. The recirculated liquid lofts solids off the bottom of the dished vessel and directs them toward the bottom center of the vessel, so the solids can be drawn into the pickup line of the SBS water purge pumps (LOP-PMP-00003A/00003B for LOP-SCB-00001; LOP-PMP-00006A/00006B for LOP-SCB-00002). The intake for the self-priming water purge pumps is located just off the bottom center of the vessel. The second water purge pump is provided for redundancy. Periodically, one of the water purge pumps is turned on to remove a portion of the liquid (with entrained solids) from the vessel. This prevents a buildup of solids in the vessel over time.

Submerged Bed Scrubber Vessels

The SBS vessels, LOP-SCB-00001/00002, are 10 ft. inner diameter cylindrical vessels with an exterior half pipe cooling jacket and two concentric rings of interior cooling coils. The SBS is 6.5 ft. high (tangent to tangent) with a maximum operating volume of 3690 gal. Each vessel has two overflow weirs to maintain level above the bed. There is a large volume below the bed to accommodate solids retention in this vessel. The SBS also has a series of eight swirl nozzles that discharge near the bottom of the vessel pointing 20° down from horizontal and 15° to the right to impart a circular flow that will tend to push accumulated solids toward the bottom center of the dished lower head. Each nozzle is fed from a ring header, which is fed by two supplies that come from a valve box at elevation +28 ft. The suction of the vessel discharge is located at the bottom center to draw the collected solids out to the RLD system. Removal of solids and excess condensate is a periodic operation, occurring approximately every two days.

The SBS is fabricated from Hastelloy® C-22® (ASTM-SB575 / UNS #N06022) by the Joseph Oat Corporation (refer to submittal 24590-QL-POA-MKAS-00001-01-01, *Drawing - Submerged Bed Scrubber, Flue or Off-Gas*

LAW Assembly Dwg, for the assembly drawing). The vessel is equipped with a spray ring and temperature and level measurement probes. The datasheet for the vessels is 24590-LAW-MKD-LOP-00008, *24590-LAW-MK-LOP-SCB-00001, 24590-LAW-MK-LOP-SCB-00002 - Melter 1 & 2 Submerged Bed Scrubber*.

The combined heat load from the melter offgas is about 3 million Btu/hr. The SBS cooling coils and jacket are assisted by the SCV jacket to remove this heat. The CHW system serves as the plant heat sink for this load.

Submerged Bed Scrubber Bed

The SBS bed is a basket 2 ft. deep with (Denstone® 99) 1-in. diameter ceramic spheres. The basket hangs from the top flange, positioned so the top of the bed is 3 in. below the weir that sets the water level. A top slotted plate holds the spheres in place. The basket is 73 in. diameter and hangs from an 86 in. diameter flange so that the bed can be removed if necessary. Two 10 in. downcomers extend from the flange to the bottom distribution plate for the main and standby offgas lines. The distribution plate is perforated with slots for the passage of air and risers, which facilitate liquid flow through the bed. A skirt extends 9 in. below the distribution plate to direct gas up and through the bed. Offgas enters the bed and rises through the distribution plate and past the bed packing, as shown in Figure 4-4. The gas also draws in liquid from below the bed, which is entrained and carried through the risers, and mixes with the gas. The liquid then overflows the bed and recirculates past the cooling coils.

Figure 4-4 Submerged Bed Scrubber Bed Distribution Plate

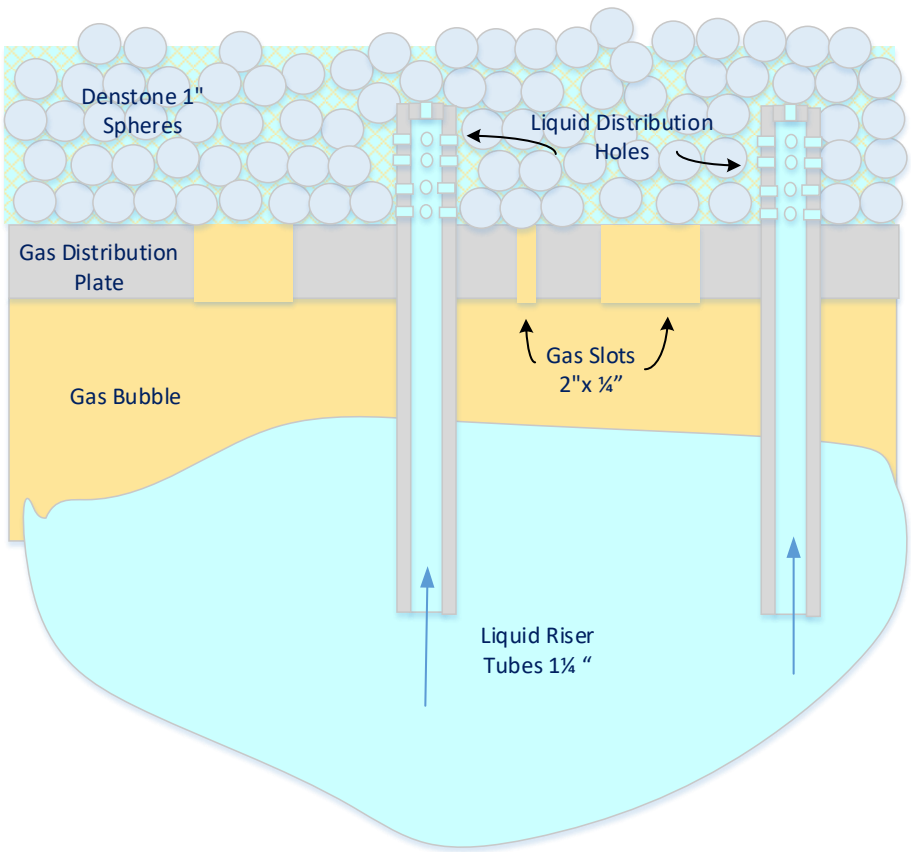

The offgas pipes are assembled from the spool pieces described in Section 4.1.1.1. The final portion of the pipe extends to the bottom of the downcomer giving a double wall inside the bed. This feature provides a removable section that could be replaced in the event of solids build up. It was found in pilot testing that the double wall

inhibits solids accumulation, presumably because the gas cools more slowly and condensation does not occur until in the bed.

The DP across the bed is the sum of hydraulic head and the resistance to flow from the support plate and packing. Estimates of the total pressure drop were taken from vessel test data for use in the flowsheet calculations. This data reflected a bed configuration that was not included in the final design. The final DP (from 24590-101-TSA-W000-0009-166-00001, *Final Report - Regulatory Off-Gas Emissions Testing on the DM1200 Melter System Using HLW and LAW Simulants*) will be 30 to 34 in. WG, rather than the 37 to 42 in. WG used in the flowsheet cases.

Submerged Bed Scrubber Water Purge Pumps

Two pumps for each SBS (LOP-PMP-00003A/00003B and LOP-PMP-00006A/00006B) are installed adjacent to the SBS on the platform at elevation +14.25 ft. in the WPC to remove excess condensate from the SBS. The pumps are redundant (one duty/one spare). The active pump draws from the center bottom of the vessel, where solids have been directed for transfer. A bulk transfer is made, including solution recirculated from the SCV, to transfer any accumulated solids in the bed. The condensate is pumped to the bulge at elevation +28 ft. and directed to RLD-VSL-00005. The centrifugal pumps can develop 17 ft. of lift, and deliver 48 gpm. The datasheet for the pumps is 24590-LAW-MPD-LOP-00007, *24590-LAW-MP-LOP-PMP-00001, -00002, -00004, -00005 - Melter 1 and 2 SBS Condensate Purge Pumps, LOP-PMP-00001/2/4/5*.

The condensate produced, and solids captured, in the SBS are purged every 24 to 48 hr. The SBS water purge pump transfers condensate to RLD-VSL-00005 at an approximate normal rate of 48 gal / min.

4.1.1.1.4 Submerged Bed Scrubber Condensate Vessels and Valve Bulge

Refer to P&IDs: 24590-LAW-M6-LOP-00001002 (melter 1)
24590-LAW-M6-LOP-00002002 (melter 2)
24590-LAW-M6-LOP-00001003 (bulge 1)
24590-LAW-M6-LOP-00002003 (bulge 2)

As the offgas cools in the SBS, water vapor condenses and increases the liquid inventory. The liquid overflows into the associated SCV (LOP-VSL-00001/00002) located next to the SBS, thereby maintaining a constant liquid depth in the SBS. The SCV has a cooling jacket to further cool the condensate. The SCV is 8 ft., 2 in. high (tangent to tangent) by 12 ft. inside diameter with a maximum operating volume of 7402 gal. The vessel capacity is designed to hold about two days of condensate. This vessel is vented via the overflow line back through the SBS into the offgas system pipe.

Cooled condensate is recycled from the SCV to the SBS at an approximate normal rate of 80 gals/min using a SBS condensate purge pump (LOP-PMP-00001/00002/00004/00005). The pump pairs are redundant for improved reliability and to support maintenance. The recycle rate is higher than that of the condensate being removed, thereby maintaining the constant liquid level necessary to control offgas flow rates in the SBS. The recycled condensate contributes to the cooling of the SBS and keeps collected solids in suspension for removal.

To help remove solids, the recycle stream is pumped through eight lances that agitate the bottom of the SBS and consolidate the solids near the suction of the SBS water purge pump (LOP-PMP-00003A/00006A). An eductor, powered by a side stream from the recycle line, is used to suspend the solids accumulated in the SCV.

Submerged Bed Scrubber Condensate Vessels

The SCVs (LOP-VSL-00001/00002) are 12-ft ID cylindrical vessels with an exterior half pipe cooling jacket. LOP-VSL-00001 supports LOP-SCB-00001 and LOP-VSL-00002 supports LOP-SCB-00002. Each vessel is agitated by a liquid eductor, which is fed by the condensate purge pumps. The motive fluid is pushed through an orifice, entrains tank fluid, and ejects the combined liquid into the tank to suspend any solids that may have entered the tank from the SBS. Low operating level is about 20 in., or 450 gal.

The vessel stores condensate accumulated from melter feed as it is quenched in the SBS. The vessel is sized to hold about two days of condensate from 15 MTG/d production.

Each SCV is fabricated from Hastelloy® C-22® (ASTM SB-575 / UNS #N06022) by Harris Thermal Transfer Products (refer to submittal 24590-QL-POB-MVA0-00002-01-01, *Drawing - LAW Melter 1 SBS Condensate Vessel*, for the assembly drawing). The vessel is equipped with a spray ring and temperature and level measurement probes. Vessel datasheets are 24590-LAW-MVD-LOP-00004, *24590-LAW-MY-LOP-EUDC-00001 - LAW Melter 1 SBS Condensate Vessel Mechanical Data Sheet: Vessel*, and 24590-LAW-MVD-LOP-00005, *24590-LAW-MY-LOP-EUDC-00002 - LAW Melter 2 SBS Condensate Vessel Mechanical Data Sheet: Vessel*.

Condensate Purge Pumps

The condensate purge pumps (LOP-PMP-00001/00002/00004/00005) are vertical cantilever pumps installed in the SCVs. The redundant pumps circulate condensate to the SBS swirl nozzles and to the liquid eductor inside the SCV. The pumps deliver condensate to the valve bulge (LOP-BLDG-00001/00002) on elevation +28 ft. where it is distributed. Normally, approximately 80 gpm is recirculated back to the SBS through lances in the bottom of the SBS. The lances agitate the solids and center them to the intake (suction line) for the SBS water purge pumps. The remaining flow from the condensate purge pumps (approximately 44 gpm) is recirculated back through a mixing eductor in the bottom of the SCV. Priming water is provided to the pumps automatically on startup. Condensate can also be periodically transferred to RLD-VSL-00005 using valves in the valve bulge.

Valve Bulge

Each SBS/SCV pair has a corresponding valve bulge (LOP-BULGE-00001/00002) located in the process cell charge floor, elevation +28 ft., just above the WPC. The bulges are enclosures in the C3 area so maintenance can be performed. The valve bodies are within the enclosure, which vents to the WPC, and the valve stems extend through the enclosure wall to an actuator outside. The bulges have a wash-down capability with a sloped floor to a drain. The valves control the condensate flow from the water purge pumps and the condensate purge pumps described above.

The SBS, SCV, and valve bulge arrangement is depicted in Figure 4-5.

Figure 4-5 Submerged Bed Scrubber Circulation

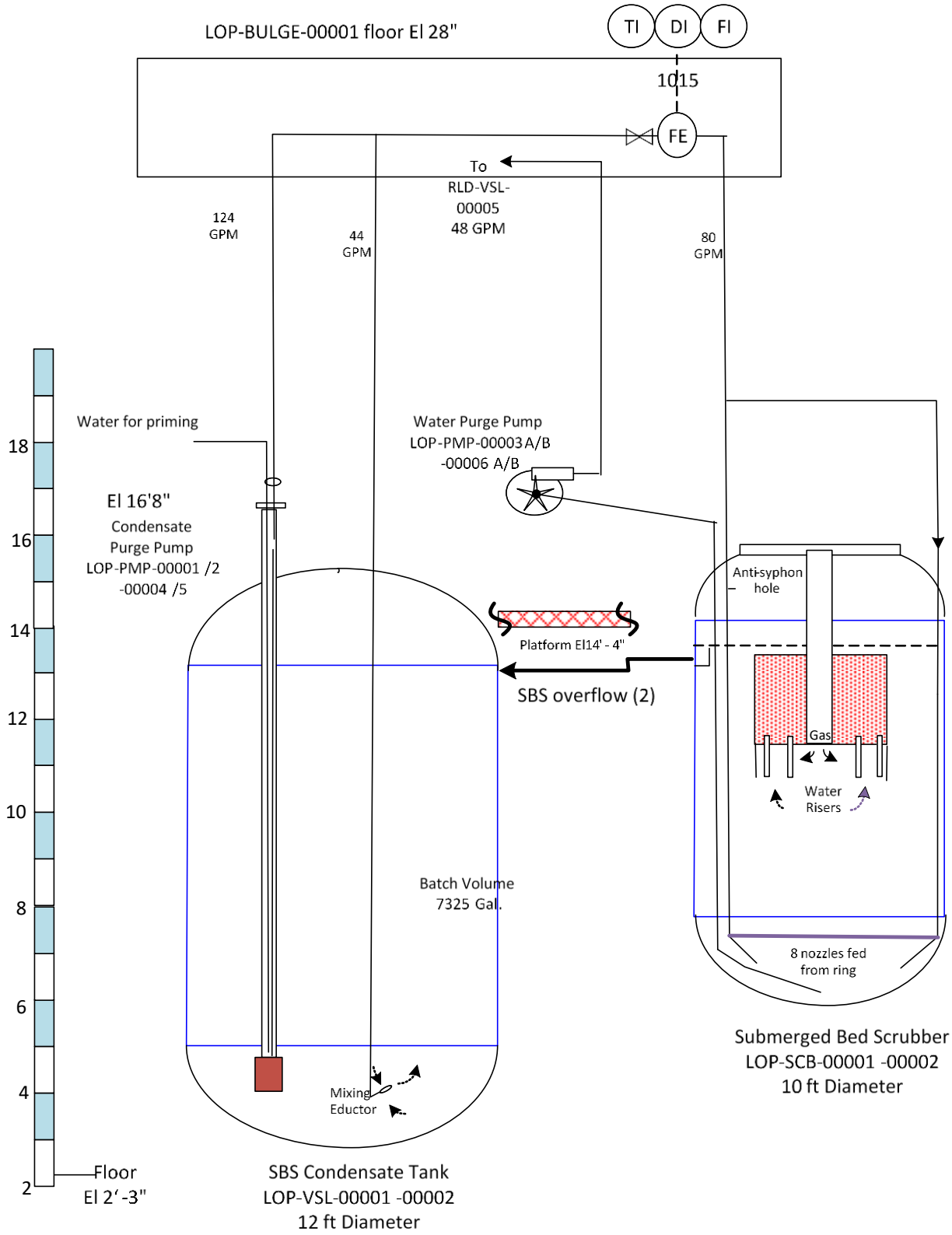

4.1.1.1.5 Wet Electrostatic Precipitator

Refer to P&IDs: 24590-LAW-M6-LOP-00001004 (WESP 1)
24590-LAW-M6-LOP-00002004 (WESP 2)

Refer to calculation: 24590-LAW-MKC-LOP-00005

Refer to drawings: 24590-QL-POA-MKE0-00001-06-23 (fogging header LAW WESP)
24590-QL-POA-MKE0-00001-06-28 (collector details LAW WESP)
24590-QL-POA-MKE0-00001-06-32 (general arrangement LAW WESP)
24590-QL-POA-MKE0-00001-06-25 (electrode details LAW WESP)

Each LOP train contains a WESP. Electrostatic precipitation is a widely used environmental protection technology that has been used to control fine particulates. The addition of mists to the process improves the efficiency and expands the variety of pollutants controlled. There are three steps in the WESP process:

1. The submicron particles, acid mists (aerosol), mercury vapors, metals, etc., pass through a high-voltage electric field generated by an anode (rods) and collect a negative charge while they are within the field.
2. The negatively charged particles and aerosols drift toward and collect on the positive cathode (tubes) due to electrostatic attraction.
3. Collected material is removed from the electrode by washing with a liquid.

A WESP can be operated with a high collection efficiency and low pressure drop, making it an energy efficient offgas cleaning method. A benefit of a WESP over an electrostatic precipitator is that it has no re-entrainment losses or back corona.

The WESP configuration includes an offgas baffle plate, fogger nozzles, electrodes, collector tubes, and an upper washing header (refer to Figure 4-6). The WESP is a vessel that is 8 ft. diameter and 21.5 ft. tall. A dished top and bottom accounts for 7.1 ft. of the vessel's height. The tank tangent (T-T) line is defined as the elevation of weldment between the bottom head and shell of the vessel. The offgas inlet to the WESP is a 10 in. nozzle located 23.5 in. above the T-T line. Due to chloride presence and its corrosiveness, the WESPs are fabricated from a 6% molybdenum alloy.

The WESP interfaces with the plant service air system (PSA) for purge air, the DIW system for misting and washing, the LVE system for electrode power supply, and the waste collected and washed from the WESP goes to the RLD system.

Figure 4-6 Wet Electrostatic Precipitator Configuration

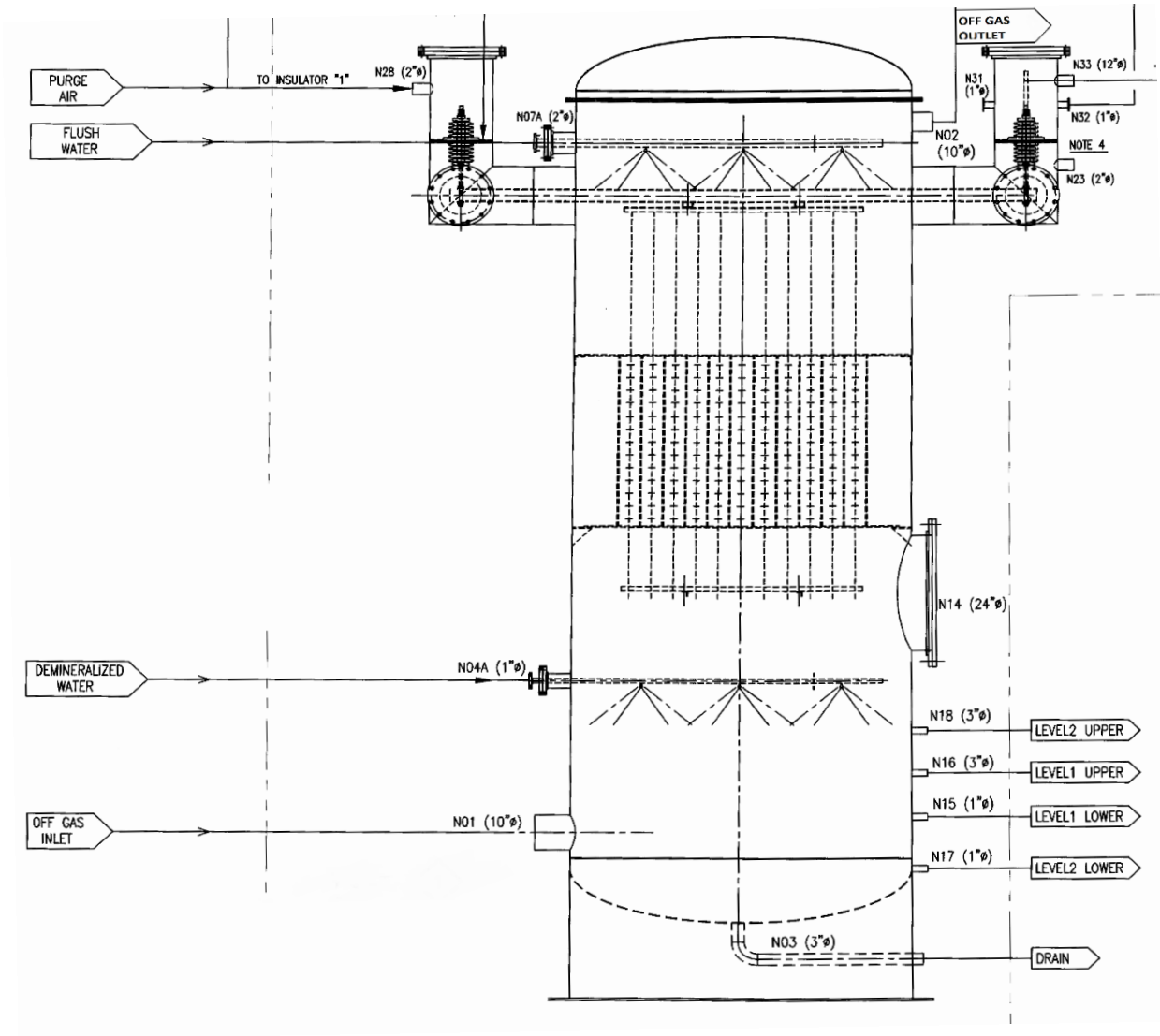

The saturated offgas from the associated SBS, containing entrained particulates and aerosols (both radioactive and toxic), enters the 8 ft. diameter WESP vessel from the side near the bottom and is dispersed and deflected downward by an angled plate. Offgas then passes upward through a lower perforated baffle for more even distribution of the offgas, where it is met by an array of nine nozzles on three headers delivering a total continuous spray of 0.36 gal/min of demineralized water. The lower level misters above the baffle plate increase the efficiency of cleaning and cooling the melter offgas before it reaches the electrodes. The offgas stream moves up through the positively charged collection electrode tubes. The collection electrode tubes are a large array of 123 16-gauge, 6 in. outside diameter, AL-6XN® parallel stainless steel tubes welded at each end to two perforated circular support plates to create a cylindrical unit 4 ft. 5.75 in. tall and 7 ft. 5.5 in. diameter. Figure 4-7 shows the electrode and collector tube arrangement from a side view. The collection electrode array has three lifting lugs mounted on the top for installation and removal from the vessel. It is attached to the vessel on the upper collecting tube support plate by a flange using 20.625 in. diameter bolts and nuts around the outer edge. Both top and bottom flanges are sealed by a 0.625 in. thick EPDM (EP terpolymer) gasket. The tube bundle weighs 3065 lb.

Figure 4-7 Electrode and Collector Tube Side View

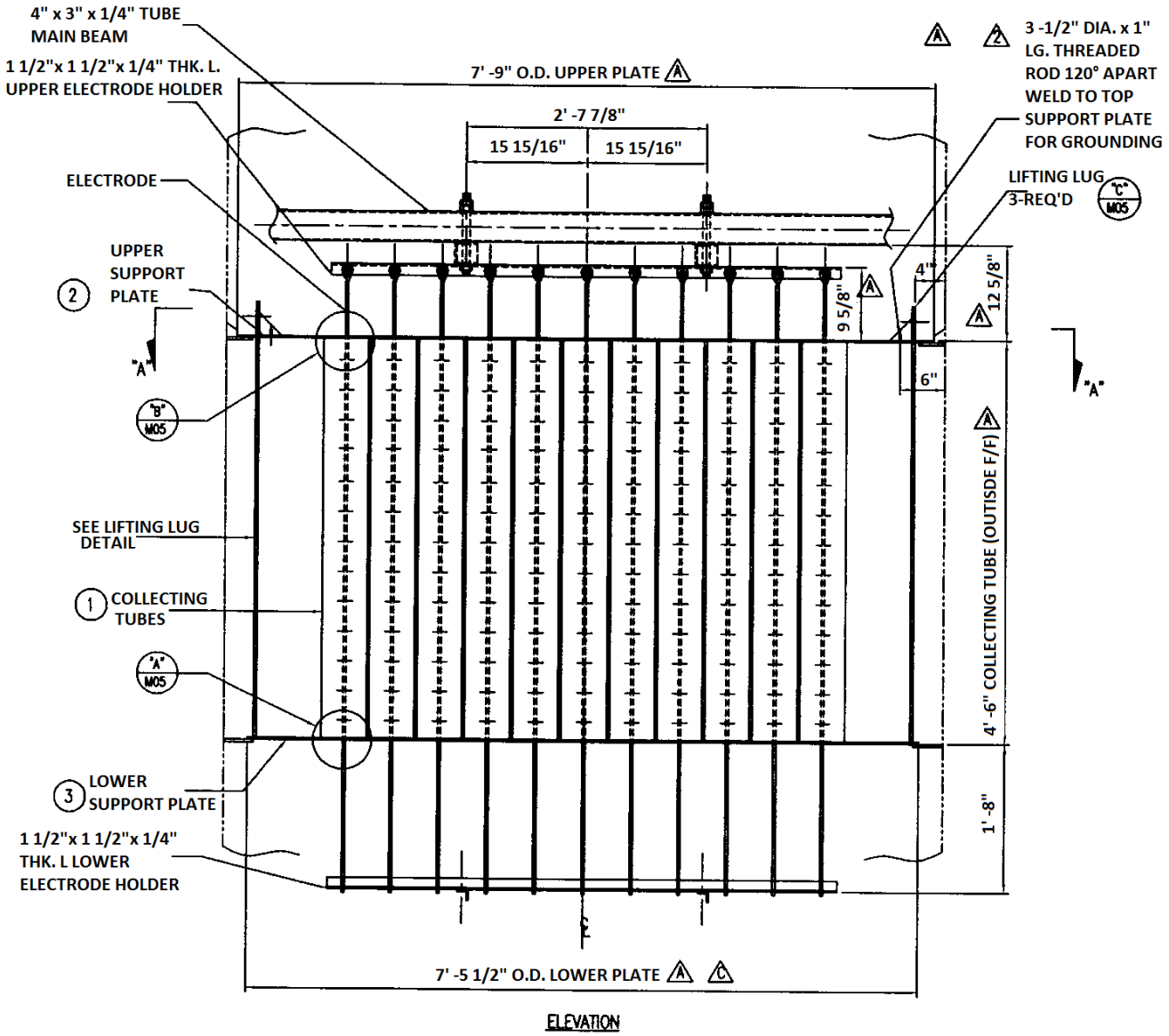

The negatively charged dispersive electrodes run down the centerline axis of each collection tube. The negatively charged electrodes generate an electric field that transfers a negative charge to the particles and fine droplets, which then allows them to be electrostatically collected onto the positively charged collection electrode. They are fabricated from the same AL-6XN alloy as the collector electrode and are nominally 7 ft. long with eight rows of 0.625 in. tall, 16-gauge spines spaced equally around a 0.375 in. rod. Electrode edge points, 0.375 in. tall, are scallop cut out of the spines at a 0.4375 in. radius and run parallel along the rod's central 4 ft. length. The edge points facilitate the creation of a controlled high voltage discharge corona inside the tubes. Care is to be taken in keeping the points clean for uniform corona creation. Each of the 123 tubes of the collection electrode has a corona-generating electrode centered in it with a maximum ±0.25 in. deflection from the tube center. The portion of the electrode rod extending above and below the collection electrode tube is for hanging and support.

The upper electrode support rack suspending the 123 dispersive electrodes consists of 13 AL-6XN® alloy upper electrode holder bars in parallel, which are held by two long upper-connecting channels, 3 by 3 by 0.25 in. thick, attached perpendicular to the 13 bars. Two main beams of 4 by 3 in. tubes that cross at 90°, act as the bus bars for the electrical connection and complete the electrode assembly. They are attached by four bolts to the connecting channels, and their ends extend horizontally beyond the vessel wall into the four insulator spool weldments, one of which contains the high-voltage electrode.

The lower support rack attaches to the rods and hangs 1 ft. 8 in. from the bottom of the collection electrode. The array of discharge electrodes is hung from a support grid fabricated from 13 electrode holders by bolts through the eyelet holes at the top of each electrode.

The whole dispersive negative electrode assembly is electrically charged during operation and must be isolated from the WESP vessel walls and the positively charged electrode tube assembly. The electrode assembly is supported by four 1 in. diameter threaded rod through the 1.25 in. diameter holes in the insulators.

Periodic rinse is performed to wash down the electrodes and vessel walls with demineralized water at a rate of 100 gals/min total from nine spray nozzles. Each nozzle has a 0.28 in. diameter hole and all nozzle spray patterns overlap. Some of the condensate will flow back down the sides of the tubes, be atomized, and get entrained in the offgas stream back up different WESP tubes. A 5 min flush will generate 500 gals of wash fluid. The accumulated fluids from the flush/wash, sprayer, and condensation are free-draining through the dished tank bottom by gravity into the collection vessel RLD-VSL-00004. The drain prevents accumulation of liquid in the bottom of the WESP, allowing offgas to enter through the inlet pipe near the bottom of the vessel.

Four unglazed deeply ribbed alumina insulators, 18.5 in. long, electrically isolate the high voltage dispersive electrode assembly from the grounded collection electrode tube assembly. The insulators are suspended in the centers of the spool assembly by plates. The three insulators not attached to the incoming power cable are perforated with six equally spaced 1 in. diameter holes, which allow air to pass around the insulator. The power cable incoming box has no holes. The circular plates are seated then epoxied onto the insulators and a 0.125 in. EPDM (EP terpolymer) gasket seals the insulator mounts to the support plate. The insulators are deeply ribbed to prevent flashover. Flashover is where current is conducted along the surface of the insulator. If material collects on the surface, a leakage of current and eventually flashover may occur, shorting the system. If the lower resistance material collected on the surface gets wet, flashover voltage can be reduced by 50%. The orientation of the deep ribs form downward-facing, cup-shaped surfaces to help shed build-up like an umbrella sheds rain. To further reduce electrical losses, purge air is introduced.

Purge air for electrodes is heated to at least 5°F above the offgas inlet temperature by LOP WESP purge air heaters (24590-ME-LOP-HTR-00001/00002). This prevents any condensation on the main electrodes or within the electrode housings. These electrodes provide high-voltage power to the two precipitator electrodes. Report 24590-WTP-RPT-PT-02-005, *Flowsheet Bases, Assumptions, and Requirements*, states 350 actual cubic feet per minute (ACFM) heated continuous purge is at 1 psig and at least 5°F above offgas inlet temperature to maintain a dry atmosphere (above the dewpoint) within the electrical insulator housing. (Report 24590-WTP-RPT-PT-02-005 states air is for conductors at one point, insulation at another, and housing at a third.) Approximately 85 ACFM will go to each of the four insulator housings, and 5 ACFM to the upper electrode, which is supplying power. There are three ports where the purge air is introduced near the top of the containment ducts without electrical supply cables where it flows down and past all the ribs, through the perforated support plates, then into the WESP vessel chamber. One taller containment duct is for supply power as well as mechanical support of the high-voltage electrodes and the other three provide mechanical support. Since the one for power supply has no perforated plate, purge air enters below the insulator plate. A second purge enters just above the insulator plate and exits at the top of the weldment above the incoming high-voltage cable port. This purge vent joins with other vessel vents and connects to the LVP header ahead of the HEPA heaters.

The automated dynamic management of the electrical power control in the electrostatic precipitator is the key to its functioning. This is accomplished through switched integrated rectifier (SIR) main units. The SIR power supply consists of three main units: a power and control cabinet, a converter, and a high-voltage unit.

The power and control cabinet contains power, control cable terminals, and contactors, as well as a controller, which is the central control unit in the SIR. The converter consists of power electronic circuits for frequency conversion of the LVE electrical supply coming into the SIR. The converter holds a rectifier, power transistor switches and a power transistor driver board. The high voltage unit consists of an oil-filled tank, which contains the high frequency/high voltage transformer and rectifier. The three-phase, alternating current (AC) power input is rectified in a three-phase rectifier. The direct current (DC) power is then inverted in a converter to a high frequency current (25 to 40 kHz). This current is then transformed into high voltage units, rectified, and fed to the WESP. The LVE system provides 480 V into the SIR, which then produces an output of 70 kV to the WESP.

The SIR feeds current to the WESP electrodes via the bus bar. Along with high voltage control, the SIR has several secondary controls associated with it. The key secondary controls of the SIR are the spark level follower and the limiter. The spark level follower is used to achieve maximum current and, thus, maximum precipitation of particles. Output current and spark rate are monitored. High current or a spark rate that is higher or lower than normal is a sign of excess buildup on the collector tubes, indicating it is time to wash down the electrodes and vessel wall. The transformer/rectifier set is de-energized during washdown.

With cooling of the offgas stream there will be concomitant condensation within the WESP. This condensation combined with added process water will increase liquid level in the base of the WESP. The level of liquid in the bottom of the WESP is measured by an ultrasonic/radar level transmitter using a stilling well, or bridle, system. The 10 in. offgas inlet nozzle is centered at 23.5 in. above the T-T line. High level liquid, and solids collection, may restrict or block the incoming offgas flowpath, increasing pressure in the WESP back to the melter. The liquid storage capacity, including 4 in. of straight wall above the T-T line weld of the dished head, is 657 gals. This represents the lower limit of measurement by the stilling well.

The WESP control system consists of a programmable logic controller, a local human-machine interface (HMI) touch screen as well as the plant wide distributed control system (PCJ). The programmable logic controller interfaces with the precipitator's high voltage transformer/rectifier and provides status of the operating parameters to the HMI and PCJ. The PCJ provides remote control and monitoring of the WESP system. It also controls the purge air and electrode wash systems.

A flow control valve is located downstream from each WESP (LOP-FV-1140 downstream from LOP-WESP-00001 and LOP-FV-1240 downstream from LOP-WESP-00002). Each WESP flow control valve works in concert with the melter plenum pressure controls to maintain proper vacuum on the associated melter. If a melter burp causes pressure to rise in the melter plenum, the pressure control air to the primary film cooler is reduced by a flow control valve on the air supply to the film cooler. The reduced flow of air to the film cooler is detected by a flow indicator one of the air supplies to the film cooler. The lower flow rate of air to the film cooler causes the associated flow control valve downstream from the WESP to open in response. This reduces the flow resistance to help the offgas system restore proper vacuum at the melter. As the WESP flow control valve is opened and the melter burp wanes, vacuum at the melter will increase and the pressure control air to the film cooler will increase. The increased airflow to the film cooler will cause the WESP flow control valve to partially close back down. The offgas system will be tuned to ensure stable operation given the feedback loop.

4.1.1.2 LVP Component Descriptions

The LVP portion of the offgas system combines the offgas streams from the two LOP trains. The 8 in. offgas lines from both WESPs are combined into a common 18 in. LVP header, located upstream of the HEPA

preheaters. The LVP header contains key pressure instrumentation used to control exhauster speed to maintain the LVP header within the desired vacuum range and safety pressure gauges used to trip offgas system reconfiguration interlocks under certain upset conditions. The instrumentation located on the header and associated controls are described in detail in Section 4.1.6.2.1. The vent lines from the LAW process vessels located in the WPC also combine and connect into the LVP header through a pressure control valve (PCV) (PV-0072). This header can be flushed with demineralized water, which drains to vessel RLD-VSL-00004, the C3/C5 drains / sump collection vessel.

The LVP header and process vent connection are shown in P&IDs 24590-LAW-M6-LVP-00001001 and 24590-LAW-M6-LVP-00001002, *P&ID - LAW - LAW Secondary Offgas/Vessel Vent Process System HEPA Preheaters*.

After the header, the combined offgas and vessel vent stream flows through the HEPA preheaters, HEPA filters, mercury mitigation skid, SCO/SCR skid, caustic scrubber and exhausters, then on through the stack. Each of these major components and associated equipment are described in detail in the following sections.

4.1.1.2.1 High-Efficiency Particulate Air Electric Preheaters

Refer to P&ID: 24590-LAW-M6-LVP-00001002

The combined offgas stream from the two LOP sides is split downstream from the LVP header and each stream is passed through one of two parallel normal process offgas heaters (LVP-HTR-00001A or LVP-HTR-00003A). These normal process offgas heaters utilize electric heating elements to increase the gas temperature of the combined offgas stream at least 18°F from a nominal 131°F to 149°F to decrease relative humidity of the offgas and prevent condensation in downstream components, particularly the HEPA filters. Sizing of these heaters is such that if one of them fails, the other unit can maintain the combined stream offgas required temperature increase. The normal heaters have a duty of 25 kW nonsafety. Calculation 24590-LAW-MEC-LVP-00004 demonstrates that the preheaters LVP-HTR-00001B and LVP-HTR-00003B (formerly safety heaters) are not required to maintain offgas temperatures and have been abandoned in-place. The power to these heaters has been disconnected but the units have been left in-place to maintain the confinement boundary. (Refer to Figure 4-8.)

Figure 4-8 LVP HEPA Preheater and HEPA Filter Arrangement Drawing

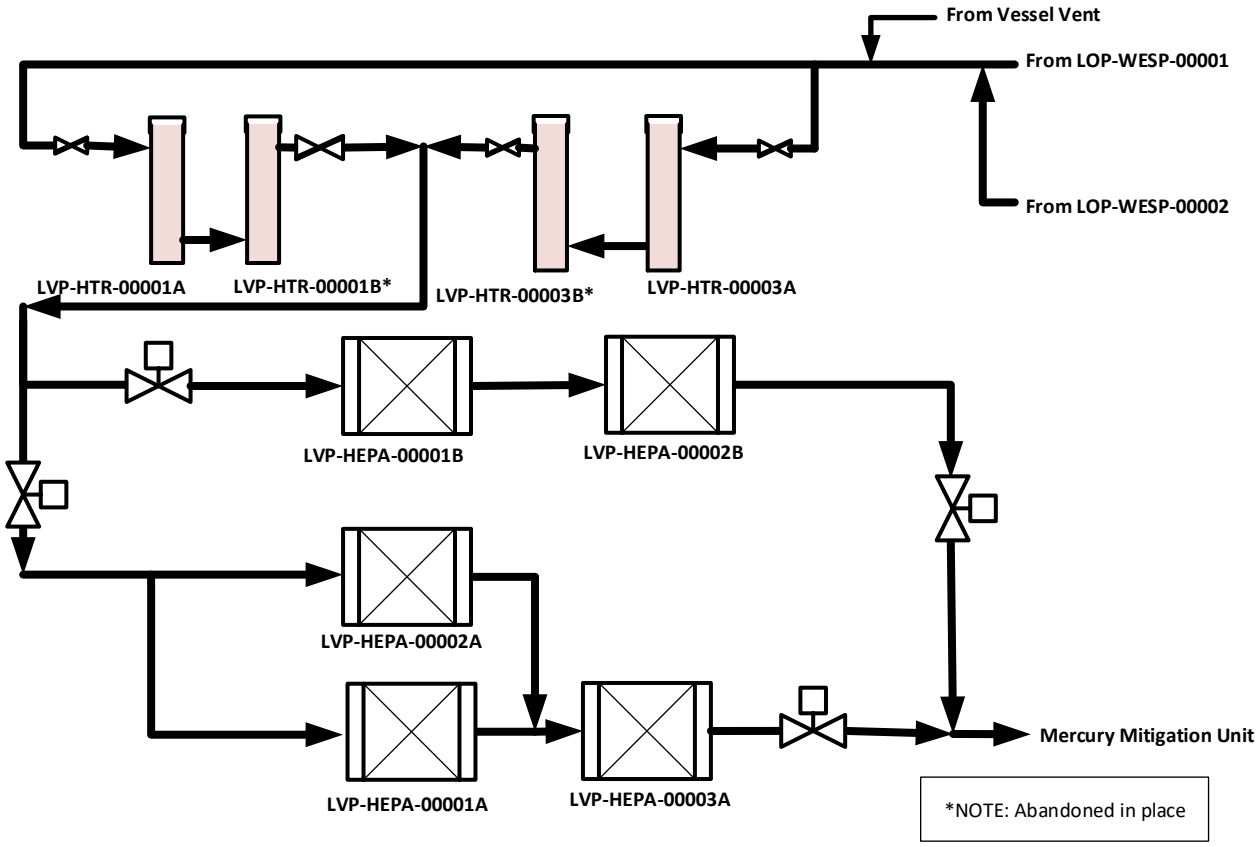

4.1.1.2.2 High-Efficiency Particulate Air Filters

Refer to P&ID: 24590-LAW-M6-LVP-00001003

The HEPA filters provide the final removal of radioactive particulates to protect downstream equipment from contamination.

The heated offgas passes through HEPA filter housings forming two trains: a main train (LVP-HEPA-00002A/00001A, operated in parallel, followed by LVP-HEPA-00003A) used in normal operations; and an auxiliary train (LVP-HEPA-00001B, followed by LVP-HEPA-00002B) used as an installed backup. The HEPA filter housings in each train are arranged to form primary and secondary stages of filtration. Each stage contains a set of four HEPA filters with a total rated capacity of 8000 ACFM. Each HEPA filter has a rated capacity of 2000 ACFM.

The HEPA filters and housings have been qualified by ASME AG-1, *Code on Nuclear Air and Gas Treatment*, at 100% and 20% of rated capacity. Therefore, each stage of HEPA filters must operate between 8000 ACFM and 1600 ACFM (i.e., 20% of 8000 ACFM) to meet the ASME AG-1 requirement.

To accomplish the minimum ASME AG-1 flow when only one melter is operating, the airflows at the WESP and the film cooler for the operating melter may be increased. The additional airflow required is estimated to be 100 ACFM from these combined sources.

4.1.1.2.3 Mercury Mitigation Skid and Bypass

Refer to P&IDs: 24590-LAW-M6-LVP-00004001
24590-LAW-M6-LVP-00004002
24590-LAW-M6-LVP-00004003

After flowing through the LVP HEPA filters, the offgas flows through two activated carbon bed adsorbers. The purpose of the carbon bed adsorbers is to remove volatile mercury compounds, acid gases (e.g., hydrogen chloride, hydrogen fluoride), and I-129 from the offgas stream to reduce stack air emissions. The adsorber bed units are positioned upstream of the SCO/SCR skid (LVP-SKID-00002) to remove compounds (primarily halides and mercury) that could poison the catalysts and adversely affect the performance of the SCO/SCR.

The adsorbers are arranged in series (lead/lag) to accomplish the required removal efficiencies (LVP-ADBR-00001A and LVP-00001B). The adsorbers are closed rectangular vessels (Unit A and Unit B). Each of the vessels is approximately 20 ft. long, 10 ft. high, and 8 ft. wide, not including the structural steel base frame. Each adsorber consists of an inlet plenum, a primary adsorber bed, a secondary or guard bed, and an outlet plenum containing a discharge filter. The primary bed is a sulfur-impregnated activated carbon media designed for high selectivity for mercury removal. The granular media has a specific surface area of approximately 800m^2/g. The granules are approximately4mm in diameter. An inert zeolite material is mixed in with the sulfur impregnated activated carbon media to increase the thermal conductivity of the media. This spreads out adsorption/reaction heat, reducing the potential for hot spots in the bed. The secondary guard bed is a soda lime (3% sodium hydroxide and 75% calcium hydroxide) adsorbent media designed for the removal of the acid gas contaminants.

The LAW melter offgas flows into an inlet plenum at one end of the adsorber unit. The gas then flows into air slots on one side of the unit, between the side wall and the primary bed. The gas flows through the primary bed then through the guard bed, exiting into air slots against the opposite wall of the unit. The gas flows out of the air slots and into the outlet plenum. The offgas passes through a set of fiberglass discharge filters located in the outlet plenum before discharge into the outlet duct (18 in. process pipe). The adsorber vessels and associated piping are fabricated from 316L stainless steel.

Operated in series, the adsorber units are designed to obtain a mercury decontamination factor of 450 or more. The mercury concentration in the offgas is reduced to less than 45 $\mu g/m^3$ (with volumetric flow corrected to standard conditions). The adsorbers have a removal efficiency for hydrogen chloride or hydrogen fluoride of 97% or higher, and a removal efficiency for I_2 of 99% or higher. (Refer to 24590-LAW-MVD-LVP-00003, *24590-LAW-MV-LVP-ADBR-00001A 24590-LAW-MV-LVP-ADBR-00001B - Activated Carbon Adsorber for Mercury Abatement (LVP-SKID-00001)*.) (Refer to Figure 4-9, Figure 4-10, and Figure 4-11 for top and side views of the adsorber unit.)

Figure 4-9 Adsorber Unit (Top View)

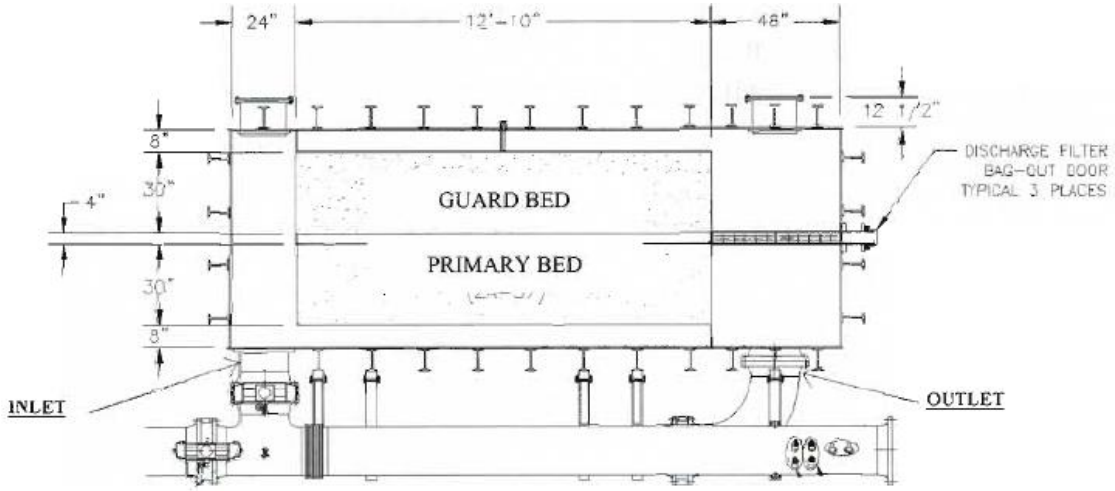

Figure 4-10 Adsorber Unit (End View)

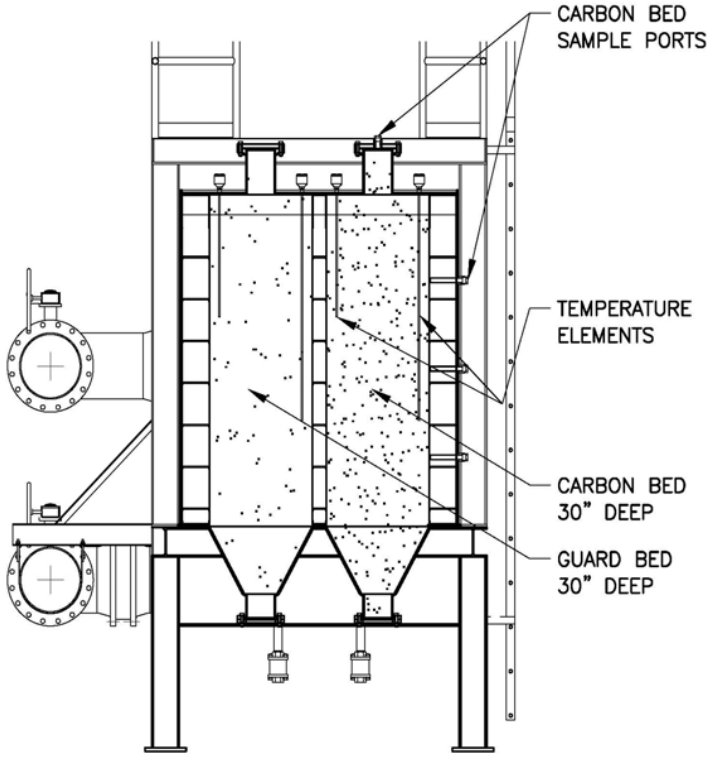

Figure 4-11 Adsorber Unit (Side View)

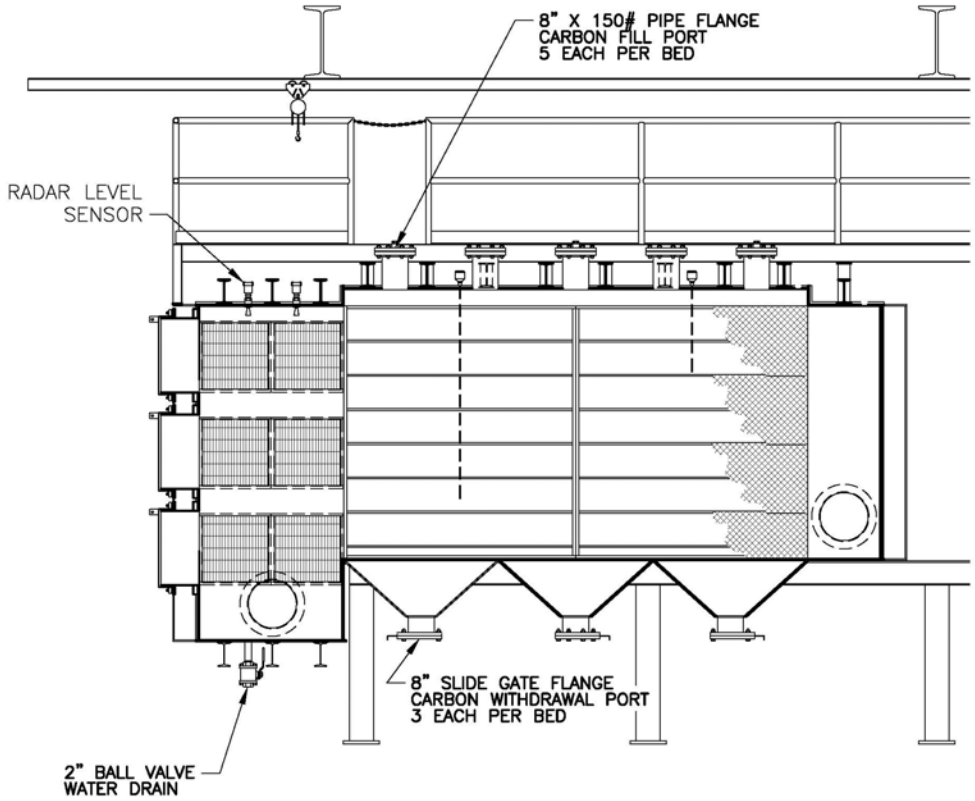

Significant instrumentation associated with the carbon bed adsorbers include pressure and temperature transmitters, carbon oxide monitors, and monitors for mercury, hydrogen chloride, and hydrogen fluoride.

Pressure instruments are installed on the inlet and outlet pipes from the adsorber beds. These are used to track pressure drop across the skid. Excessive pressure drop causes the skid bypass valve to be opened by safety interlock. This prevents potential blockage of offgas flow.

A pressure drop across the discharge filters is monitored. High DP across the filters indicates buildup on the filters and that it is time for changeout of the filters.

Temperature instruments on the inlet and outlet piping from the carbon bed adsorbers are used to track offgas temperature and to monitor offgas temperature increase from exothermic reactions in the beds. In addition, four thermocouples are provided in drywells that extend down into the adsorber beds. These allow bed temperature to be monitored.

Carbon oxide monitors are provided on the inlet and outlet piping to/from the adsorber vessels. This monitor both carbon monoxide and carbon dioxide in the offgas stream. High differential carbon oxides across the adsorbers is used to detect an accidental combustion condition in the carbon beds. If high differential carbon oxides are detected, a safety interlock closes the inlet and outlet valves to isolate air from the media and shut down oxidation reactions in the beds.

A mercury concentration monitor is connected by piping to the discharge plenums of both adsorber vessels. Valves are used to draw offgas from either plenum through the mercury monitor and discharge the sample stream back to the offgas header. This monitor is used to verify acceptable mercury loading in the treated offgas and to

detect bed breakthrough. Hydrogen fluoride and hydrogen chloride monitors are located on the discharge line from the skid. These monitors provide evidence of compliance with the WTP Nonradioactive Air Emissions NOC Approval and the Hanford Air Operating Permit.

Piping arrangement allows for either bed to be valved-in as the lead bed. A bypass path is also provided around both adsorber vessels. Butterfly valves on the inlet and outlet pipes from the skid are used to line up the vessels in lead/lag position or to isolate the beds for media change out, maintenance activities, or to respond to various safety trips. The bypass valve is opened to maintain vacuum and offgas flow through the offgas system when the vessels are isolated.

The bypass valve and isolation valves are designated SS to ensure reliable function in various postulated accident scenarios. The butterfly valves are air actuated. The inlet valves on each adsorber vessel are normally-open and fail-closed and normally-open and fail-closed, depending on the adsorber lead/lag configuration. The bypass valve around the skid is normally closed and fail-open. The valves are dual purpose, meaning they are used to isolate and bypass the beds for both normal maintenance activities (such as adsorbent media change out or discharge filter replacement) and to respond to various accident conditions. Under accident conditions, the PPJ system overrides normal PCJ control of the valves.

The adsorber vessels are designed to withstand full vacuum and are required to withstand a positive pressure of at least 4 psig (design pressure to be determined by seller). A pressure relief path with rupture disk is provided on each adsorber vessel. This prevents potential vessel pressurization from reactions when the inlet and outlet valves are closed to isolate the unit for maintenance or in response to high-differential carbon oxide concentration across the beds or high bed temperature readings. In addition, the pressure relief path will protect the vessel from over pressurization if water is added to the vessel to quench residual reactions in the beds after the units are isolated. The pressure relief path vents back to the offgas header. The carbon adsorber design temperature of 300°F accounts for exothermic reactions within the carbon beds. This provides a contingency of 138°F above the maximum gas inlet temperature.

Activated carbon life is expected to be approximately two years. Mercury breakthrough is monitored using the mercury monitor connected to the discharge plenums of both adsorber units. Sampling ports are provided at different bed elevations so media can be drawn and tested. The mercury concentration readings and media samples can be used to predict when the media will become spent and need to be changed out. The carbon adsorber vessel is bypassed and the inlet and outlet butterfly valves are closed during media change out. The spent carbon media is discharged through slide gates on the hoppers on the bottom of the vessel into 55 gal drums. The guard bed soda lime media is removed from the unit in a similar fashion. The base frame of the adsorber vessel is tented with plastic sheeting and the drum liner is secured to the slide gate to minimize contamination spread during the unloading process.

Fresh media for both the primary and guard beds is loaded through ports provided on the top of each vessel. Blind flanges are removed as necessary from each port to add the adsorber media. A portable fan and HEPA filter unit is connected to the discharge plenum (via a discharge filter access panel) to maintain the adsorber unit under vacuum and to control dust during media changeout operations.

Access to the discharge filter elements for change-out is accomplished through panels located on the wall of the discharge plenum. The filters are replaced based on high DP measured across the discharge filter bank. A bag-in/bag-out procedure is used to prevent contamination spread during filter change out.

4.1.1.2.4 Selective Catalytic Oxidizer and Reducer Skid and Ammonia Dilution Skid

Refer to P&ID: 24590-LAW-M6-LVP-00005002

Refer to calculation: 24590-CD-POC-MBT0-00007-02-00001 (mass/energy balance)

Refer to datasheet: 24590-LAW-MKD-LVP-00012

The SCO/SCR skid is approximately 44-ft. long by 9 ft. wide by 13 ft. high and is in room L-0304F at elevation +48 ft. (24590-CD-POC-MBT0-00007-03-00001, *Data Sheet - Mechanical Data Sheet, LAW Catalytic Oxidizer/Reducer*). The SCO/SCR unit is a combination of rectangular modules. Each module is a rectangular box with formed angle stiffeners welded to the outside perimeter. The housings connect to the associated ductwork via rectangular plate flanges.

The offgas from the mercury adsorbers enters the recuperative heat exchanger where it is heated from approximately 169 to 633°F and passes to the electric heater, where it is further heated to about 750°F. The offgas then passes through the SCO module where carbon monoxide, and VOCs are oxidized to carbon dioxide and water. The oxidized offgas then flows through the SCR module where the nitrogen oxides are reduced to nitrogen and water, proceeds back through the hot side of the recuperative heat exchanger, and is discharged to the scrubber.

All the outside surfaces of the processing modules on the catalyst skid are typically covered with 3 in. of Microtherm® 1000x overlaid with 1 in. of mineral wool insulation (on the outside). The access panels are covered with removable insulation blankets 24590-CD-POC-MBT0-00007-03-00033, *Data Sheet - Insulation Material, LAW TCO*.

The ammonia dilution skid is closely associated with the SCO/SCR skid because it provides the diluted ammonia gas that is injected into the SCO/SCR skid upstream from the SCR. A simplified process flow diagram for the SCO/SCR skid and supporting ammonia/air dilution skids is shown in Figure 4-12. Figure 4-13 provides front side and back side views of the SCO/SCR skid, showing how the various modules are arranged on the skid. Figure 4-14 depicts the ammonia dilution skid.

Figure 4-12 Flow Diagram of the Selective Catalytic Oxidizer/Reducer and Ammonia/Air Dilution Skids

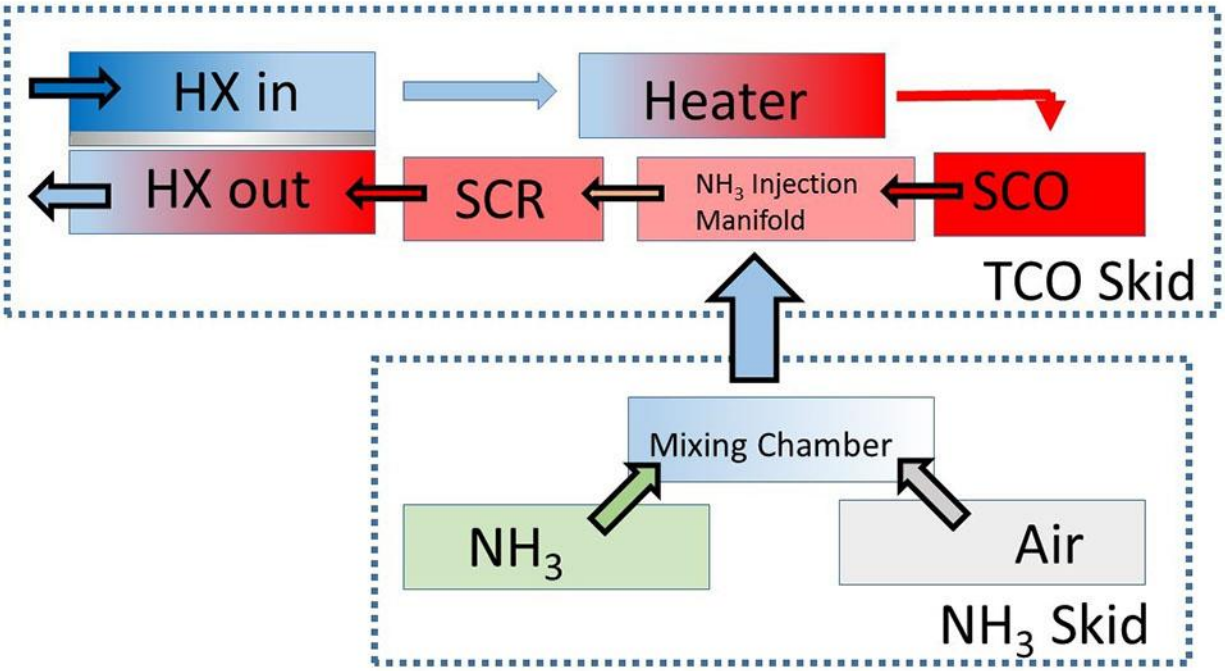

Figure 4-13 Selective Catalytic Oxidizer/Reducer Skid with Insulation Installed

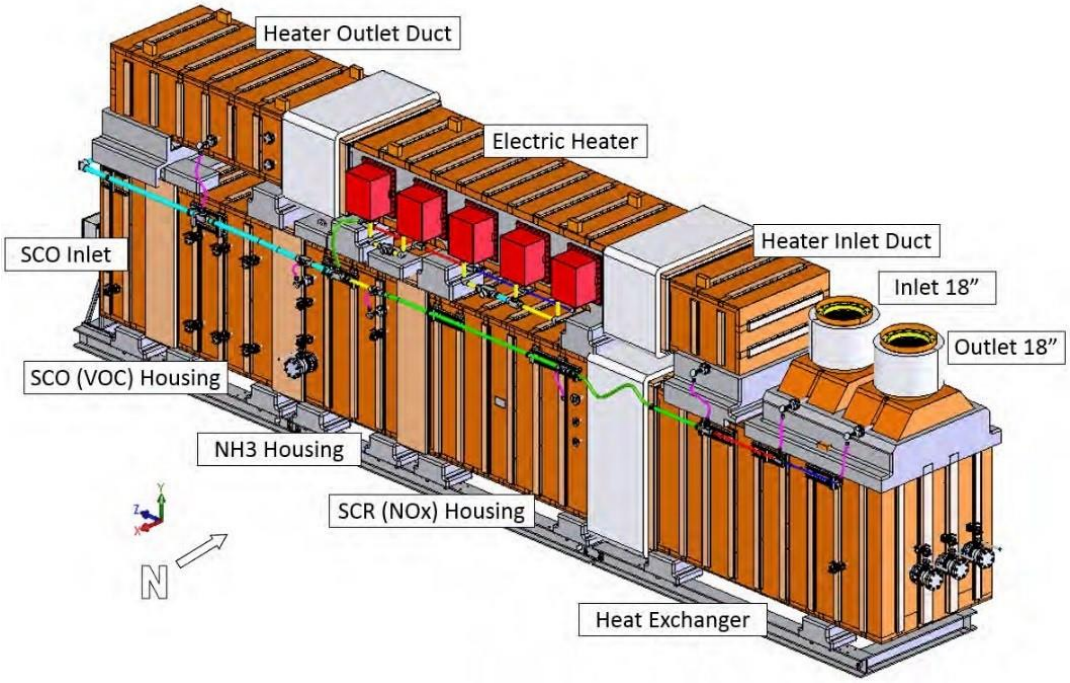

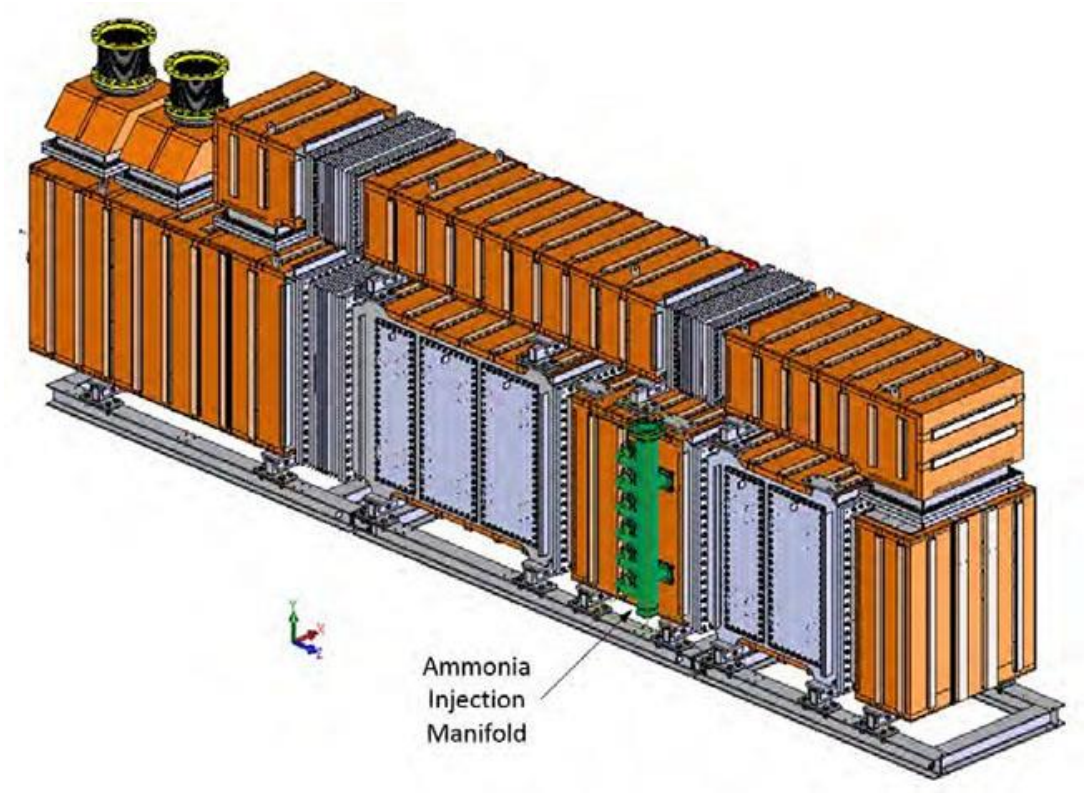

4.1.1.2.4.1 Recuperative Heat Exchanger

Refer to P&ID: 24590-LAW-M6-LVP-00005002

Refer to calculation: 24590-CD-POC-MBT0-00007-02-00001 (mass-energy balance)

Refer to datasheets: 24590-CD-POC-MBT0-00007-03-00008

The recuperative air-to-air heat exchanger is a high-temperature, counter-current flow plate heat exchanger fabricated by Munters Corporation, Buena Vista, VA. It is approximately 59 in. wide by 76 in. high by 116 in. long (refer to 24590-CD-POC-MBT0-00007-03-00008, *Data Sheet - Heat Exchanger Core, LAW TCO*). Both the housing and internals are made of 347 stainless steel. The heat exchanger serves the reciprocal functions of heating the incoming offgas from the mercury absorbers and cooling the offgas leaving the SCR unit. The heat exchanger uses the hot gas exiting the SCR unit to preheat the incoming offgas to approximately 633°F before discharge to the electric heater. The heat exchanger is a passive unit and does not have any associated controls Design flow on the cool inlet side is 5403 cfm and 13,096 lb./hr. at 189°F with a pressure drop of 0.98 in.-WG. Warm side inlet design flow is 13,805 cfm and 16,673 lb./hr. at 805°F with a pressure drop of 1.53 in.-WG. The heat exchanger has a design temperature of 850°F and a maximum heat transfer of 1,752,000 Btu/hr. for an 82.7% thermal transfer effectiveness.

4.1.1.2.4.2 Electric Heater

Refer to P&ID: 24590-LAW-M6-LVP-00005002

Refer to datasheets: 24590-CD-POC-MBT0-00007-03-00009 (electric heater)

24590-CD-POC-MBT0-00007-03-00037 (heater control panel)

Downstream from the recuperative heat exchanger, the electric heater is used to heat the offgas to the desired temperature of 750°F for optimum operation of the SCO. The housing is approximately 14 ft. 9 in. long by 4 ft. 4 in. wide by 33 in. high. Five replaceable heating element blocks (manufactured by CCI Thermal Technologies, Inc.) are evenly spaced along the length of the heater housing. The heating blocks are installed in flanged openings in the side of the heater housing. The heater contains thermal monitoring instruments and active electrical controls. The duty of the 480 VAC Incoloy-800 heater is 310 kW. It has a normal operating temperature of 750°F and a maximum and design limit temperatures of 805 and 850°F respectively.

4.1.1.2.4.3 Selective Catalytic Oxidation Unit

Refer to P&ID: 24590-LAW-M6-LVP-00005002

Refer to calculation: 24590-LAW-MKD-LVP-00012

Refer to datasheet: 24590-CD-POC-MBT0-00007-03-00003 (SCO catalyst)

The offgas leaving the electric heater flows to the SCO. The SCO is approximately 63 in. wide by 79 in. high by 79 in. long. The heart of the SCO is a bank of catalyst modules in 3 layers of 12 modules each.

The VOCs are present in the offgas stream. Environmental air emissions requirements for both nitrogen oxides and VOCs require their reduction or removal from the offgas stream before discharge through the stack. The heated offgas (~750°F) is passed through the VOC catalyst in the SCO (LVP-SCO-00001) to oxidize VOCs and carbon monoxide to water vapor and carbon dioxide. The VOC catalyst is a platinum-based material deposited on a cordierite ceramic monolith. Cordierite is a common catalyst substrate due to its high thermal shock resistance, good strength and low thermal mass. The units are held in frames and inserted/removed through access doors on the side of the skid. The VOC catalyst is designed to achieve a VOC DRE of 95%.

4.1.1.2.4.4 Ammonia Injection Module

After the offgas passes through the SCO unit it is then injected with a mixture of ammonia vapor and C3 air supplied from an ammonia/air dilution skid (LVP-SKID-00003) described in Section 4.1.1.2.4.6. The diluted ammonia is injected into the ammonia injection module, which is located between the SCO and the SCR. The ammonia injection module is approximately 63 in. wide by 72 in. high by 76 in. long. It contains a vertical grid of six horizontal 3-in. diameter schedule 40 ammonia injection pipes. Each pipe is capped on the end and is bored radially with 62 0.125 in. diameter holes distributed along the length of the pipe on the downstream side. The ammonia injection grid is designed to evenly distribute the diluted ammonia into the cross section of the offgas flow. It is a passive system with no instrumentation or controls.

4.1.1.2.4.5 Selective Catalytic Reducer

Refer to P&ID: 24590-LAW-M6-LVP-00005002

Refer to datasheet: 24590-CD-POC-MBT0-00007-03-00004 (SCR catalyst)

Following ammonia injection, the offgas is passed through the SCR catalyst to reduce nitrogen oxides to nitrogen and water vapor. The SCR module is approximately 63 in. wide by 79 in. high by 118 in. long and contains a matrix of 60 catalyst modules arranged in an array 4 wide by 3 high by 5 deep. Each catalyst module is 13 in. wide by 18 in. tall by 9 in. deep. The SCR catalyst is a vanadium/titanium coating on a ceramic cordierite monolith, which is held in frames and inserted/removed through access doors on the side of the skid. The diluted ammonia injected upstream of the SCR reacts with the nitrogen oxides in the offgas to reduce it to nitrogen and water. The offgas exiting the SCO at (nominally) 750°F is cooled by the injection of the diluted ammonia stream to within the acceptable operating range of 605 to 620°F before it enters the SCR.

The SCR catalyst is designed to achieve a nitrogen oxide reduction of 98%. This is a passive system with no associated mechanical or electrical controls. Possible catalyst poisons for both the VOC and SCR catalysts include mercury, sulfur oxides, and halogens. Because this is one of the last treatment steps in the offgas system, other poisons are not a concern.

4.1.1.2.4.6 Ammonia Dilution Skid

Refer to P&ID: 24590-LAW-M6-LVP-00005001

The ammonia dilution skid is approximately 13 ft. long by 9 ft. tall by 10 ft. wide. It is in room L-0304F at the 48-ft level, south of the SCO/SCR skid. The ammonia dilution skid has two parallel 8 in. diameter air supply lines, each incorporating a HEPA filter, a fan, and associated valves and instrumentation. The air is supplied by a single line from the C3 air supply duct, which splits to provide air to the two separate air supply lines. Downstream from the fans and manual shutoff valves, the two air lines come together again at a wye. Downstream from the wye, there are three thermal mass flowmeters in series to measure the airflow. Only one of the air supply lines is in service at any given time while the other is in standby. Downstream from the wye, the air is combined with pressurized anhydrous ammonia from two 6000-gal ammonia storage tanks, AMR-VSL-00003/00004, located in the southeast corner of the WTP site several hundred feet from the LAW Facility and then flows into the ammonia injection grid located between the SCO and SCR. Areas containing ammonia lines are monitored to detect leaks. (Refer to Figure 4-14.)

The ammonia is supplied through a 2 in. diameter line, which contains block valves, a PCV, a flow control valve, and three flowmeters. The control valve regulates the supply of the ammonia to the SCR catalyst based on ammonia concentration in the offgas leaving the SCO/SCR skid. The ammonia flow rate is maintained below a predetermined setpoint by the orifice size for the pressure regulator on the ammonia supply. The ammonia / nitrogen oxide molarity injection ratio is ~1:1 with a maximum ammonia consumption rate of 123 lb./hr.

Instrumentation is located upstream from the SCO/SCR skid to determine the incoming nitrogen oxide concentrations, at the outlet to determine the ammonia slip and at the stack to measure the residual nitrogen oxide concentration.

Figure 4-14 Ammonia Dilution Skid General Arrangement

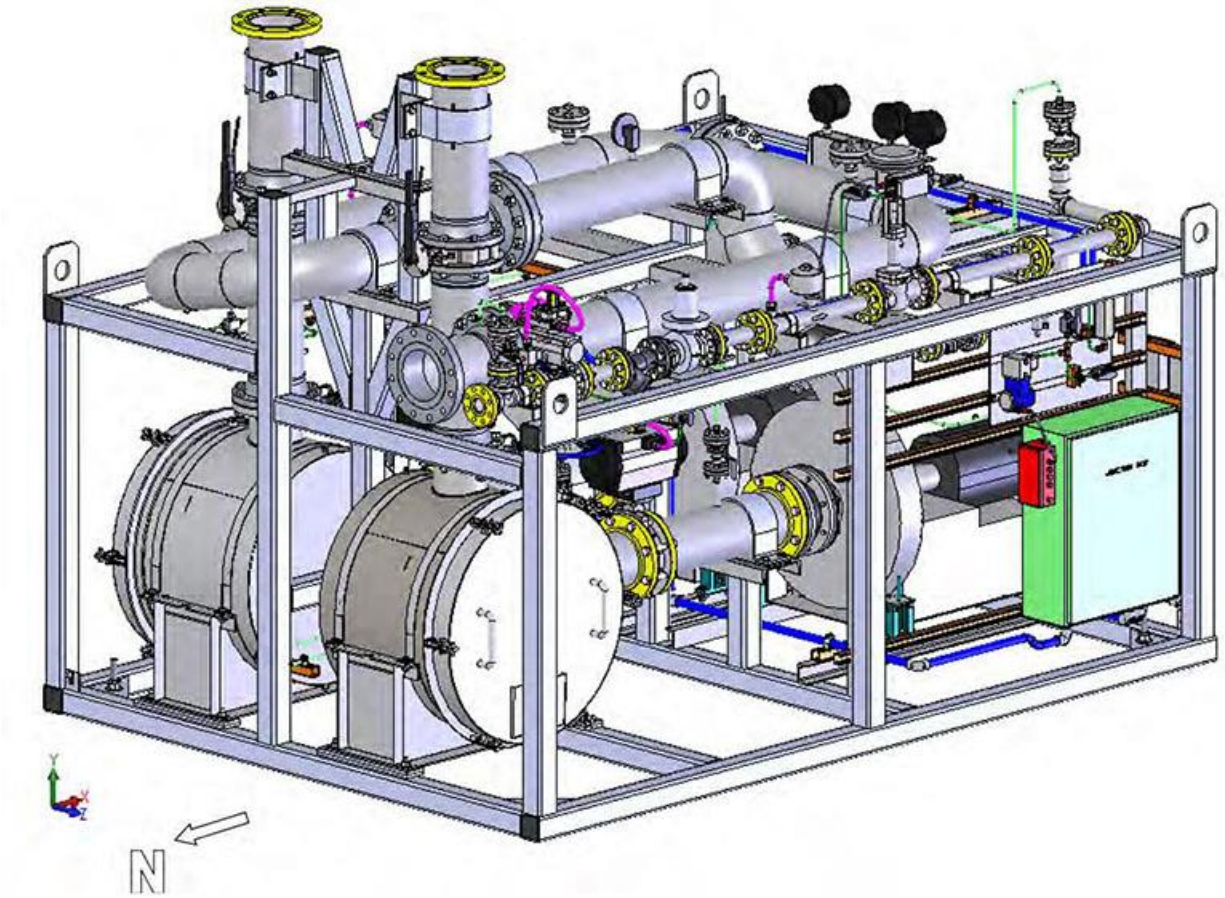

4.1.1.2.5 Caustic Scrubber

Refer to P&IDs: 24590-LAW-M6-LVP-00002002 (scrubber)
24590-LAW-M6-LOP-00002001 (bypass)
24590-LAW-M6-LOP-00002003 (tank)
24590-LAW-M6-LOP-00002004 (recirculation loop)
24590-LAW-M6-LOP-00002005 (transfer pump)

A caustic scrubber (LVP-SCB-00001) cools the hot offgas stream discharged from the SCO/SCR skid and further treats the offgas by removing acid gases (i.e., 97% removal efficiency for combined sulfur dioxide and trioxide; also, removes HF and HCl from the offgas stream). This scrubber has a nominal offgas inlet flow rate of 8500 ACFM at 400°F and −135 in. WG. The scrubber is fabricated from 316L stainless steel for the top head and upper shell, with Alloy C-276 for the lower shell and bottom head; refer to corrosion evaluation 24590-LAW-N1D-LVP-00001, and vendor calculation 24590-QL-POA-MKAS-00003-06-00001, *Calculation - LAW Melter Offgas Caustic Scrubber Process*. The scrubber is in room L-0304F at elevation +48 ft. (Refer to Figure 4-15.)

The offgas stream enters near the bottom of the scrubber and flows upward through a packed bed. The offgas flows countercurrent to the scrub solution, which is introduced through a distributor above the packed bed and flows downward through the packing media. Contaminants in the offgas stream are absorbed into the liquid.

The hot offgas stream entering the bottom of the scrubber is cooled by evaporation of a portion of the quench water sprayed into the bottom of the column to enhance gas absorption in the packed section. The degree of cooling and offgas temperature attainable at the bottom of the packing are limited by the quantity of water that can be evaporated before the offgas stream becomes saturated with water vapor. There is no other source for cooling for the recirculating buffer stream in the LVP scrubber system. The temperature of the buffer solution draining from the scrubber into the caustic collection tank depends on the efficiency of the evaporative cooling of the hot offgas stream by the quench water sprays. Because the gas stream discharged from the scrubber will be saturated and in thermal equilibrium with the recirculating solution supplied to the top of the packing, the scrubber gas outlet temperature depends on the temperature of the buffer solution contained in tank LVP-TK-00001.

Four individual spray nozzle assemblies are in the bottom of the scrubber. To provide the extremely small droplet size required for instant evaporation, the water stream is atomized by a small amount of compressed air. The pressures and flow rates of quench water and atomizing air to the quench water spray nozzles are critical to efficient cooling of the offgas at the scrubber inlet and are therefore carefully controlled.

Figure 4-15 Caustic Scrubber System

Gasses Absorbed in Scrubber Packed Section

Gas	After Absorption	Salt After Neutralization	Comments
CO_2	H_2CO_3	Na_2CO_3 & $NaHCO_3$	Proportions Depend on Solution pH
SO_2	H_2SO_3	Na_2SO_3	
SO_3	H_2SO_4	Na_2SO_4	
NO	N/A	N/A	NO is Insoluble in Water
NH_3	NH_4OH	$(NH_4)_2SO_4$	Effect on Solution pH is negligible due to hot alkaline solution in scrubber that limits absorption of NH3

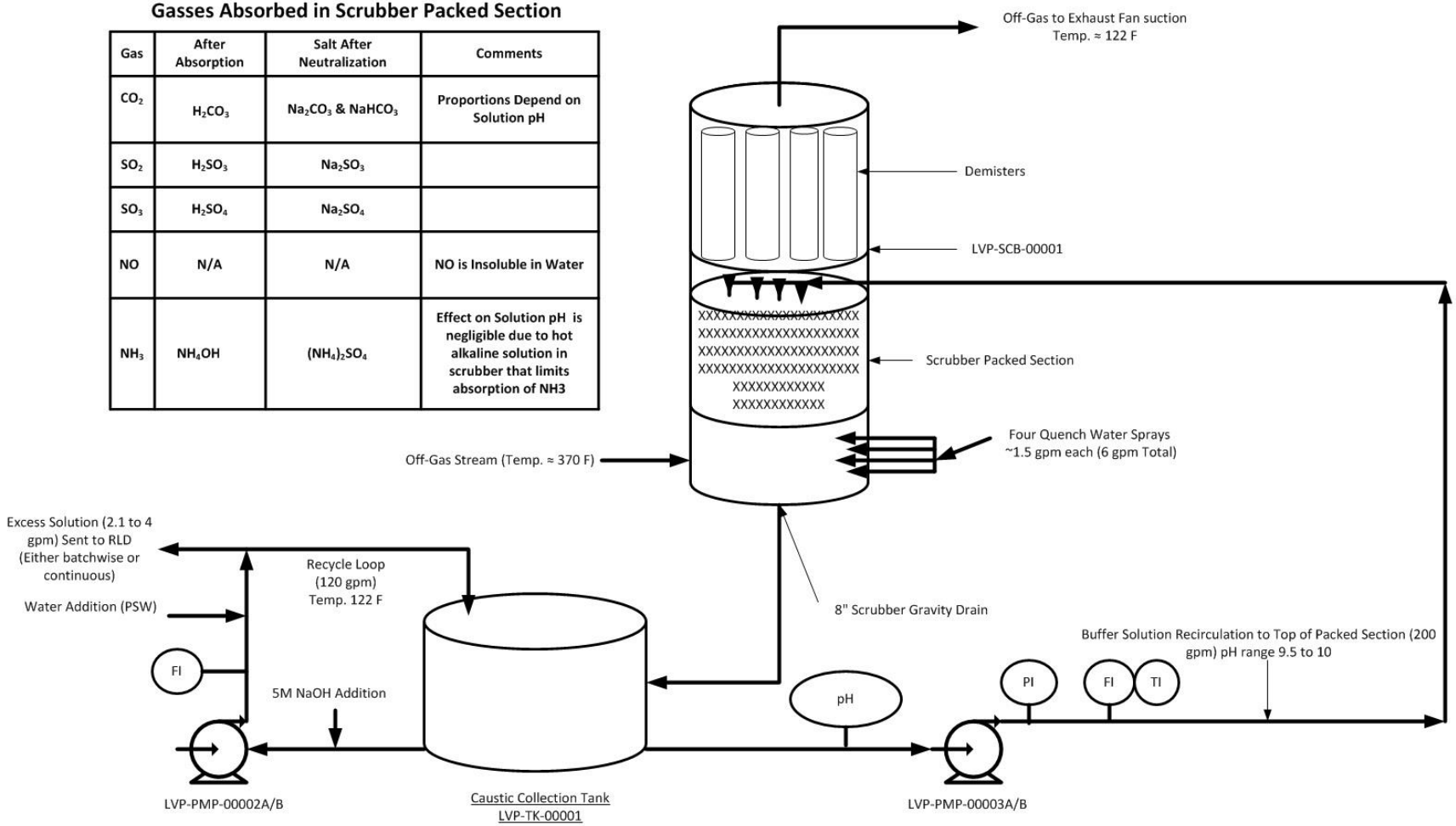

The packing is designed to enhance the absorption of the acid gases from the offgas stream into the buffer solution. To enhance gas absorption, the packing provides a large surface contact area in a small height of the scrubber where the small passages through the packing force intimate contact between the rising cooled offgas stream and the buffer solution flowing down through the packing.

Flooding of the packing can occur (high DP) when either the incoming offgas or the flow rate of the recirculated buffer solution is too high. The flow rate of the recirculated buffer solution is controlled to prevent flooding.

The eight packing bottom water sprays are used to wash solids from the bottom portion of the packing weekly or more often if the packing DP instrumentation indicates a higher than normal DP.

The scrubbed offgas is then passed through a mist eliminator. Although 10-micron liquid droplets are easily removed by impaction, droplets below 3 microns follow the gas flow around the impaction surfaces. The four demister towers are designed to remove the small (smaller than 3 micron) droplets through Brownian motion, which requires the gas to be maintained near the filter element for as long possible. The filter towers have a large flow area and the gas flow face velocity of less than 1 ft./sec. The offgas stream that exits the scrubber is in thermal equilibrium with the scrub solution and is saturated with water vapor at that temperature.

The scrub solution drains into a caustic collection tank (LVP-TK-00001). This liquid is transferred to the top of the scrubber using a caustic scrub solution pump (LVP-PMP-00003A/00003B). The two pumps are rated at 200 gals/min each and are intended for one pump to be in operation while the standby pump is for backup in case of pump failure or maintenance. The caustic scrub solution pump supplies fresh buffer solution on the top of the packing for acid gas absorption.

The four demister spray nozzles are aimed directly at the top inner surface of each element to wash any surface accumulation from the elements to reduce the DP. The flushes will be performed periodically and when the DP has been seen to increase. Because the elements are depth filters, small droplet capture may occur deep within the media where a solids accumulation may not be reached by the surface sprays. If this occurs, causing the DP to continue to rise, the elements must be removed and replaced.

The scrubber drain piping is 8 in. from the bottom of the scrubber and routes the scrubber solutions to the top of the caustic collection tank. The drain piping has a long, near-horizontal, 16 in. pipe section that provides a liquid volume in the drain, which will maintain a liquid hydraulic seal between the scrubber operating under vacuum and the caustic collection tank that operates at atmospheric pressure.

The caustic collection tank collects three solutions of slightly different pH and provides a holdup volume where the recirculation of buffer solution is relied on to mix the tank contents. The three streams of slightly different pH are as follows: (1) The buffer solution pumped at about 200 gals/min from the bottom of the caustic collection tank for transfer back to the top of the packing is maintained within the design pH range. (2) The buffer solution pumped to the top of the packing drains from the bottom of the packing and is partially depleted by chemical reaction with the acid from the absorbed gases. This partially depleted buffer solution then drains at about 200 gals/min out of the scrubber drain and into the top of the caustic collection tank. (3) The caustic collection tank solution is pumped from the bottom of the caustic collection tank at 120 gals/min with the 5 M sodium hydroxide solution continuously added to the pump suction. This solution is recirculated directly back to the top of the caustic collection tank. The sodium hydroxide added at the pump suction restores the partially depleted buffer to the initial pH.

The caustic collection tank is designed for a 2-day hold-up of accumulated caustic scrub solution. The operating volume of this tank is 6000 gal. The tank is 13 ft. in diameter by 14 ft., 4 in. high (to the upper tangent) with a maximum overflow volume of 7300 gal. This tank is fabricated from 316 stainless steel; refer to corrosion evaluation 24590-LAW-N1D-LVP-00002. The tank was modified in the field by lowering the overflow pipe to provide a hydraulic seal between the tank at atmospheric pressure and the scrubber under vacuum.

The tank buffer solution volume is maintained to support the transfer of buffer solution to the top of the packing in the scrubber. The tank is fitted with level instrumentation. Sampling capability and measurement of density, temperature, and flow are provided at the discharge of the caustic scrub solution pumps (LVP-PMP-00003A/00003B). The tank vent is routed to inside the C3 ventilation system (C3V) exhaust intake for room L-0218 to prevent potential personnel exposure to fumes. The caustic collection tank overflows within the surrounding berm (if it is inadvertently overfilled).

A caustic recirculation transfer pump (LVP-PMP-00002A/00002B) normally recirculates the scrub solution back to the caustic collection tank. To neutralize the acid gases collected in the caustic collection tank, 5 M sodium hydroxide is continuously added to the caustic recirculation transfer pump suction pipe as it pumps buffer solution from the bottom of the caustic collection tank. The solution is returned to the top of the tank at about 120 gals/min. The caustic recirculation pumps are rated at 120 gals/min each and are intended for one pump to be in operation while the standby pump is for backup in case of pump failure or maintenance. The caustic recirculation pump has two functions: (1) continuous recirculation of the caustic collection solution to enhance buffer mixing because the tank has no agitator, and (2) to periodically pump excess solution out of the tank to the RLD system. The flow rate is controlled at a constant value at which a packing flood cannot occur.

The caustic scrubber is designed to operate in the pH range of 9.5 to 10, which brackets the pH of equal portions of sodium carbonate and sodium bicarbonate salts in solution. Operation within the 9.5 to 10 pH range minimizes the quantity of carbon dioxide absorbed from the offgas stream and operation above a pH of 10.3 can significantly increase the quantity of carbon dioxide absorbed, which would increase the carbonate salts in the buffer solution. The pH of the buffer solution is determined by the sodium carbonate and sodium bicarbonate molarity ratio. While carbonate salt is being depleted by chemical reaction with absorbed acids, additional carbonate salt is being generated from carbon dioxide absorption. A 5 M sodium hydroxide is continuously added to the 120 gal/min of buffer solution pumped from the bottom of the caustic collection tank and returned to the top of the tank. The sodium hydroxide is added to the caustic collection tank to reverse the reaction by reacting with sodium bicarbonate to reform sodium carbonate, which restores the full buffering capacity of the solution. Restoring the buffer solution capacity also restores the original solution sodium carbonate and sodium bicarbonate molarity ratio and pH before recirculation back to the top of the packed section. Once the functional buffer solution is established (sufficient concentrations of both sodium carbonate and sodium bicarbonate to maintain the solution pH near constant from the top of the packing to the bottom of the packing), normal operation will maintain the functional buffer solution because of the continuous absorption of more carbon dioxide. The pH of the buffer solution is determined by the sodium carbonate and sodium bicarbonate molarity ratio. The caustic reacts with sodium carbonate in the buffer solution, converting sodium carbonate to sodium bicarbonate to restore the sodium carbonate/sodium bicarbonate mole ratio, which restores the original pH.

Calculations show that the salt content of the buffer will rise during normal operation, and then level off at a maximum value unique to the sodium hydroxide demand for neutralization of the acid gases absorbed from the offgas stream. For operation of the solution at the design pH values of 9.5 to 10, the equilibrium values for sodium carbonate salt concentrations will be well below the solubility limit of both sodium carbonate and sodium bicarbonate. The carbonate concentration values reach an equilibrium maximum limit due to the dilution of the buffer solution by excess quench water and the removal of carbonates from the system when the buffer solution is periodically pumped to RLD to maintain the solution volume in the Caustic Collection Tank within limits.

The buffer solution pH is measured at the caustic scrub pump suction off the bottom of the caustic collection tank before transfer for recirculation to the top of the packing. This is done to provide guidance on the 5 M sodium hydroxide rate adjustments. The pH values determined by the pH system are used to determine if the continuous 5 M sodium hydroxide addition rate is adequate and if not, whether the rate should be increased or decreased. For pH values trending down, the rate will be increased and for pH values trending upward, the rate will be reduced.

The scrubber drain piping is 8 in. from the bottom of the scrubber and routes the scrubber solutions to the top of the caustic collection tank. The drain piping has a long, near-horizontal 16 in. pipe section that provides a liquid volume in the drain that will maintain a liquid hydraulic seal between the scrubber operating under vacuum and the caustic collection tank that operates at atmospheric pressure.

Hydraulic seal failure (i.e., seal loop not full of solution) would allow air in leakage with a loss of vacuum being detected. Normally, once the seal is filled it will remain functional from that point on. During operation, about 200 gals/min of solution continuously passes through the seal loop and drains into the caustic collection tank. There is a drain pipe and valve at the bottom of the seal loop that can be opened to drain the loop. Refill of the loop would be performed via the various sprays in the caustic scrubber.

The scrubber has provisions for process water addition during startup and to provide makeup water as necessary. A spray wash nozzle is also provided for wash-down during maintenance periods.

4.1.1.2.6 Exhausters

Refer to P&IDs: 24590-LAW-M6-LVP-00001004 (LVP-EXHR-00001A)
24590-LAW-M6-LVP-00001005 (LVP-EXHR-00001B)
24590-LAW-M6-LVP-00001006 (LVP-EXHR-00001C)

Refer to calculation: 24590-LAW-M6C-LVP-00004 (offgas pipe and exhauster sizing for LOP/LVP systems)

Refer to datasheet: 24590-LAW-MAD-LVP-00006

Three multi-stage centrifugal blowers (LVP-EXHR-00001A/00001B/00001C) with adjustable speed drive (ASD) driven motors are located downstream of the caustic scrubber (LVP-SCB-00001). The purpose of the exhausters is to provide the motive force to draw the melter offgas and vessel ventilation streams, under vacuum, through the abatement processes of the offgas system and to expel the treated offgas through the stack.

The three exhausters are arranged in parallel. Two exhausters will normally be running at a time with the third exhauster in standby. Each exhauster train has a discharge check valve, providing backflow prevention to preclude a recirculation loop through the standby exhauster. If one exhauster should fail, the standby exhauster is automatically started.

Exhauster, Motor, and Mounting Skid

The exhausters are a four-bearing outboard (4BOB) design type. In 4BOB exhausters, the impellers are mounted on a shaft supported by bearings in bearing brackets that are outside the exhauster casing at both ends.
The exhauster is driven by a standard shaft motor through a flexible coupling. A diagram of the 4BOB type of exhauster is provided in Figure 4-16. Note that the diagram shows an exhauster with eight impellers (eight-stage exhauster) as a typical 4BOB configuration. The LVP exhausters contain seven impellers, providing seven stages of compression.

Figure 4-16 Exhauster Diagram

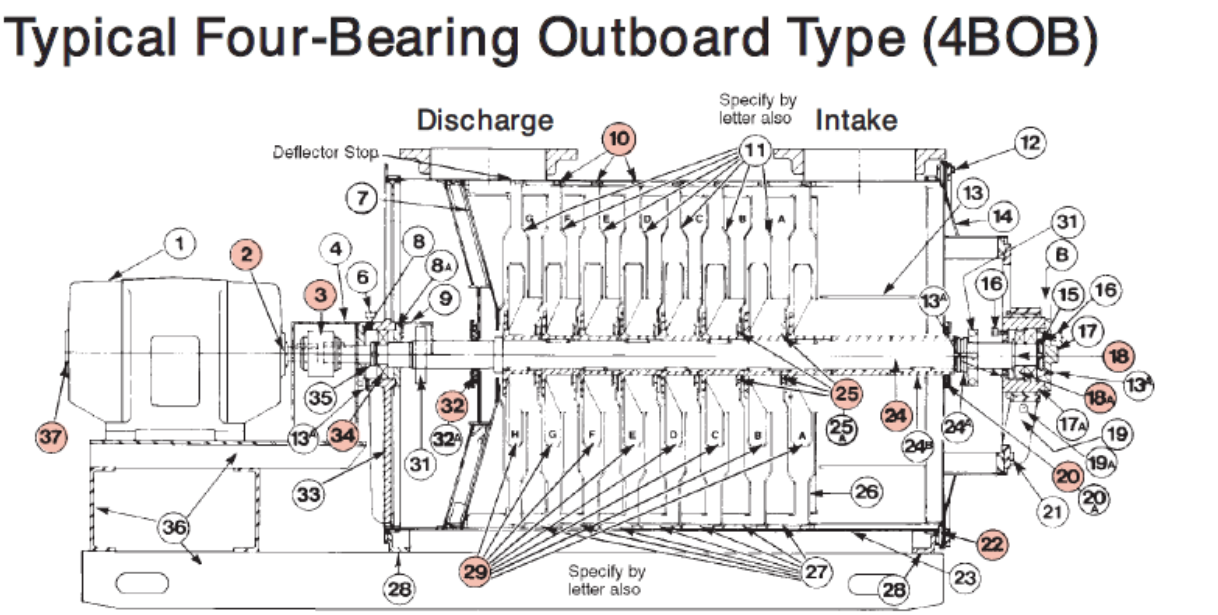

Notes:

1. *Although eight impellers and seven deflectors are shown in this typical drawing, the number in your machine may vary depending on its design criteria.*
2. *The impellers are equipped with keyed hubs as illustrated or split clamped hubs shown below.*
3. *When ordering replacement parts, refer to page 9.*

1	Motor
2	Drive End Motor Bearing
3	Flexible Coupling
4	Coupling Guard
6	Inboard Bearing Lubrication Fitting
7	*Division Head
8	Inboard Bearing Cap Front
8A	Inboard Bearing Cap Rear
9	Heat Fan Guard
10	Rope Packing for Deflectors
11	Deflectors (A, B, C, etc.)
12	End Head Bolts
13	Intake Spiral
13A	Grease Drain
14	End Head Assembly
15	Outboard Bearing Nut and Washer
16	Outboard Bearing Lubrication Fitting
17	Outboard Bearing Cap
17A	Outboard Bearing Housing
18	Thrust Washer (where applicable)
18A	Outboard Bearing(s)
19	Outboard Bearing Bracket
19A	Housing Locking Bolt and Nut
20	End Head Packing (where applicable)
20A	End Head Packing Plate
21	Bracket Bolts
22	End Head Gasket
23	Housing
24	Shaft and Keys
24A	Impeller Assembly Lock Nuts (2) and Washer (1)
24B	Shaft Sleeves (Two; one keyed)
25	Interstage Deflector Packing
25A	Center Deflector Plates
26	Half Deflector
27	Spacers
28	Feet
29	Impellers (A, B, C, etc.)
31	Heat Fan
32	Division Head Packing
32A	Division Head Packing Plate
33	Inboard Bearing Bracket
34	Inboard Bearing
35	Inboard Shaft Locking Nut and Washer
36	Common Base
37	Opposite Drive End Motor Bearing

*Not available as a separate item

Each exhauster and coupled motor are mounted on a base frame skid, as shown in Figure 4-17. The exhauster casing is approximately 45 in. diameter. Total skid length is 160 in. The total width of the baseplate including lifting tabs is approximately 62 in. Control panels and junction boxes attached to the frame make the effective width approximately 70 in. Total height to the top of the frame supporting the seal control panels is approximately 78 in. The exhauster weight is 6350 lb., motor weight is 2253 lb. and base weight is 4400 lb. Total equipment weight on each skid is approximately 13,000 lb. The drive shaft is 116.7 in. long and varies in diameter from 2.4 in. at the ends to 5.5 in. at the center.

The exhauster casing assembly is sealed by welded connections, except for the end head opposite the motor side (outboard side). This head is gasket sealed and secured with bolts. The drive shaft passes through the heads at

each end. The heads are sealed at the shaft piercings with dual gas barrier purge seals (double mechanical seals). The fixed portion of the seal is bolted to the casing heads, while the rotating portion is fixed to the shaft. The seals are continually flooded with clean, dry instrument air (ISA system). This ensures that the pressure gradient across the seal causes air to leak into the offgas system if the seal is not leak tight, instead of allowing the hazardous offgas to leak out.

The bearings supporting the drive shaft are located outside the heads, contained, and supported in bearing brackets. The drive shaft is supported on the low-pressure side (outboard side) by a combination of radial/thrust bearings and on the high-pressure side (motor side, or inboard side) by a radial bearing. The bearing brackets are single cast pieces that bolt to the casing heads. The bearing brackets transfer the load from the shaft into the casing rings, where it is then transferred to the casing supports.

Each exhauster is driven by a Baldor 200 HP TEFC-XT motor (totally enclosed, fan cooled). The drive shaft of the exhauster is connected to the motor with a flexible coupling.

Figure 4-17 Exhauster Skid

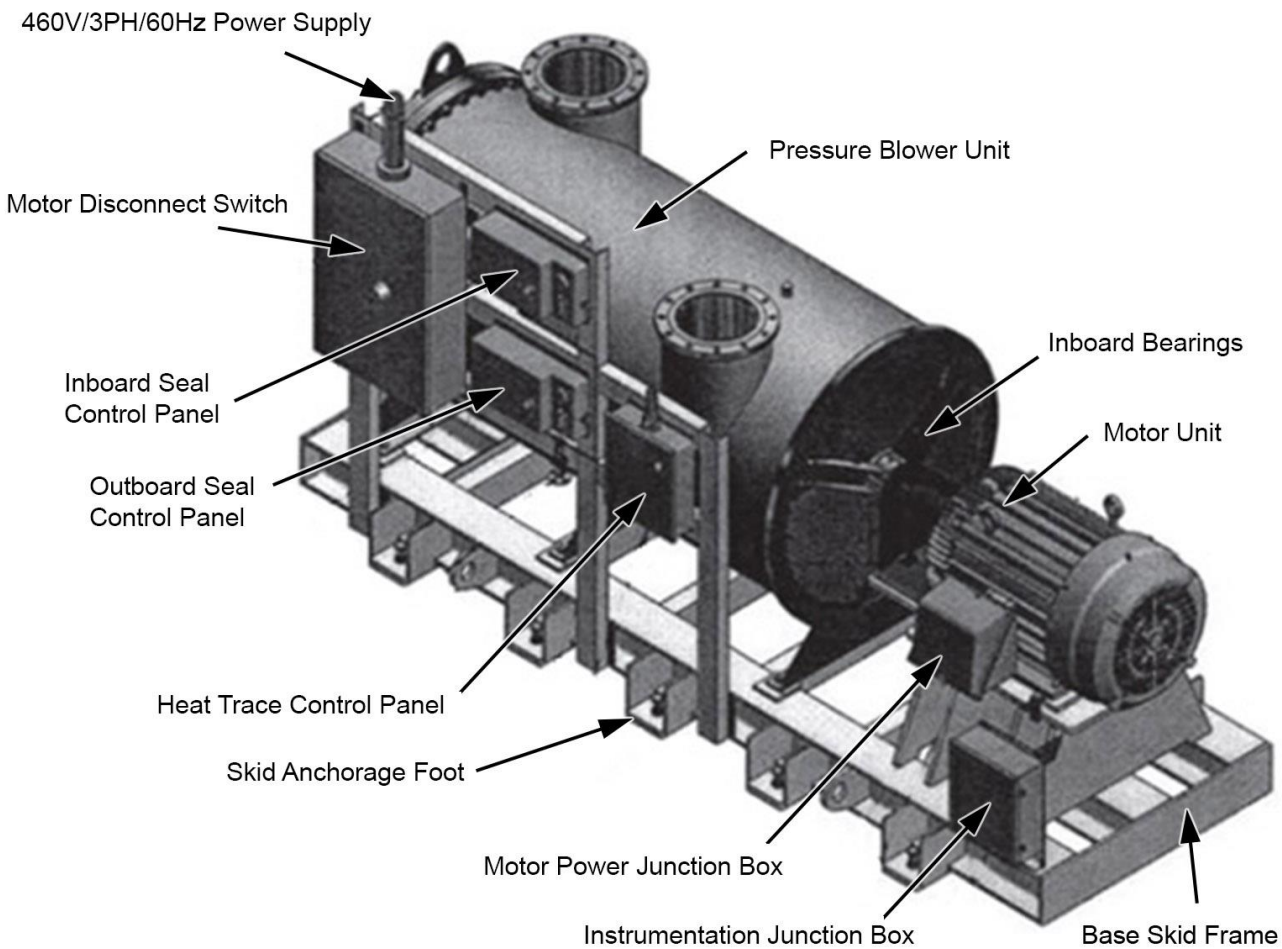

Adjustable Speed Drives

The speed of each exhauster is controlled by an ASD feeding power to the respective exhauster motor (LVP-ASD-00001A operates exhauster LVP-EXHR-00001A, LVP-ASD-00001B operates exhauster LVP-EXHR-00001B, and LVP-ASD-00001C for exhauster LVP-EXHR-00001C). The ASDs are provided as cabinets that connect to the PCJ control system through fiber optics.

The ASD controls the speed of the connected AC motor by converting three-phase AC line voltage to a DC bus voltage and then converting the DC bus voltage back to three-phase, variable frequency output. During normal operation, the ASD speed set point is provided by the PCJ based on pressure controllers. Upon reconfiguration, the PPJ provides a hardwired signal to the ASD to set it to a fixed speed. Start, stop, and speed commands via PROFIBUS. The PCJ generally operates the two online exhausters at the same speed. The safety function control is hardwired to the PPJ system. In addition to automatic control on the PCJ, the ASD can be controlled from the ASD's local control panel. Local control will override all other signals. Local control requires a passcode to gain access. It is anticipated that this feature will only be used during testing to tune the system.

The output rating of the ASD is 240 A at 480 V, 210 kVA (refer to 24590-QL-POA-EV00-00001-06-00006, *Data Sheet - ASD Electrical Data Sheet for Low Voltage Adjustable Speed Drives - LVP-ASD-00001-A/B/C*). The ASDs have the capability to start a spinning motor. Maximum motor speed from the ASD is 3638 revolutions per minute (RPM). The ramp-up time from 0 to 3638 RPM is 30 sec. The ramp-down time from 3638 to 0 RPM is 50 sec. Additional ASD design details are provided in the ASD installation, operation, and maintenance manual (refer to 24590-QL-POA-EV00-00001-01-00005, *Manual – Installation, Operation, and Maintenance Manual for Safety Q Adjustable Speed Drives*).

Piping/Valves

The three exhausters are connected to the LVP offgas system in a parallel arrangement. Two exhausters are normally running, with the third in standby. Flexible connectors are used to connect the exhauster inlet and outlet nozzle flanges to the inlet and outlet offgas system pipes. This creates an isolating gap from exhauster vibration and thermal expansion/contraction of piping.

The 18 in. diameter offgas piping exiting the caustic scrubber branches into three 14 in. diameter pipes, one to each exhauster. A normally open butterfly valve is provided on each of the 14 in. lines, followed by a reducer, which necks down to a 12 in. pipe, connecting to the flexible connector on the intake side of each exhauster. The discharge piping from each exhauster is 12 in. in diameter and contains a check valve and two normally open butterfly valves in series. The three exhauster discharge pipes combine back together in an 18 in. diameter pipe to the exhaust stack. The butterfly valves are manually actuated. The inlet and outlet butterfly valves are normally open except during maintenance activities. The discharge side check valve on each train prevents reverse flow through the associated exhauster, when that exhauster is offline (in standby). This prevents a recirculation loop from developing through the offline exhauster back to the intakes of the online (operating) exhausters. Such a recirculation loop would reduce the flow and vacuum in the upstream portion of the LVP system. The recirculating flow could also cause overheating of the online exhausters. The check valve prevents bulk recirculation flow backwards through the off-line exhauster.
Because the inlet path remains open on the standby exhauster, the potential exists for water to condense inside the exhauster. To address this issue, the three exhausters are heat traced. Heat is switched on/off automatically based on exhauster temperature. When an exhauster is shut down and placed in standby status, it will cool down and kick on the heat trace. The heat trace prevents the exhauster internal temperature from falling below the dew point. When the standby exhauster is placed in duty service, the heat trace is automatically switched off again as the exhauster heats up.

Seal Purge Air

The exhauster heads are sealed at the shaft piercings with dual gas barrier purge seals (double mechanical seals). The seals are continually flooded with clean, dry instrument air. This prevents exfiltration of offgas. The purge air is provided by the LAW ISA system. Purge control panels are provided by the vendor on the exhauster skid for controlling the seal airflow rate and pressure to each. The LAW ISA air is regulated to 110 psig. Flexible stainless steel supply hose (0.5 in.) connects the ISA system to the purge control panel. The control panel is constructed of rigid stainless steel, with connecting tubing and fittings, mechanical flow valves, a mechanical pressure regulator, a mechanical check valve, an electrical pressure switch, a mechanical pressure indicator, and a mechanical flow indicator. The panel is connected to the purge seals with 0.25 in. diameter flexible stainless steel supply hose.

The instrument air is delivered to the purge seals at about 25 psig, compared to the high side exhaust pressure inside the exhausters of less than 0.6 psig. This pressure differential forms a purging gas barrier between the non-contact sealing faces of the purge seals. The purge gas flows simultaneously into both the exhauster casing and into the room. The approximate leakage rate is expected to be well below 0.5 standard cubic feet per hour (SCFH).

The purge air system performs a SS function to prevent exfiltration of offgas from the exhauster casing. To protect against a loss of normal purge airflow, each exhauster is provided with a SS backup air supply. The pressure of the ISA line to each exhauster is continuously monitored. On detection of low pressure in the normal instrument service air supply to a given exhauster, an interlock opens an isolation valve on the air supply to that exhauster and closes the isolation valve on the normal instrument service air supply. The interlocks and valves to switch to backup air are SS.

Exhauster Function and Controls

The exhausters maintain the offgas piping, valves, and abatement equipment upstream of the exhausters under vacuum and are an integral part of the control strategy to maintain the melters under vacuum. The vacuum maintained by the exhausters prevents potential fugitive emissions from the offgas stream into occupied areas of the plant adjacent to the offgas equipment. In the event leaks develop through valve packing or equipment seals upstream from the exhausters, the vacuum in the system will cause in leakage, maintaining confinement of the offgas stream.

The PCJ automatically adjusts the speed of the exhausters, as necessary, to accommodate fluctuations in flow or fluctuations in pressure drops through the offgas system equipment. The speed of the exhausters is controlled based on a reading of the pressure at the LVP header (at LVP-PT-00070/00071), upstream of the HEPA preheaters. The offgas flows from both melter trains, and ventilation flow from the process vessel vent header combine upstream from this point. There is a separate proportional, integral controller for each exhauster. Exhauster speed is varied by the proportional, integral controllers via the ASDs connected to each exhauster motor. Exhauster speed (RPM) is adjusted automatically, as necessary, to maintain the vacuum at the HEPA preheater inlet at a setpoint value (the control signal is based on the highest pressure detected at either LVP-PT-0070 or LVP-PT-0071). The setpoint value is the calculated vacuum that is sufficient to overcome the head of liquid in the SBS and other frictional losses in the LOP system and maintain the melter plenum at the desired vacuum relative to the melter annulus and C5V system.

Flow and pressure variations caused by transients in the melter cold cap are intended to be covered primarily by the melter plenum pressure interlocks, discussed in Section 4.1.1.1.2. The LVP header vacuum/exhauster speed controls work independent of the melter pressure controls to cover flow and pressure changes not addressed by the melter plenum pressure controls, such as changes in flow and flow resistance in the LVP portion of the offgas system downstream from the WESP flow control valves. The speed controls on the exhausters ensure that the vacuum created at the LVP header remains relatively constant to create a constant draw on each LOP train. The

combined melter pressure controls and LVP header pressure/exhauster speed controls ensure that the melter pressure remains in the desired range.

The exhauster design and operating conditions are provided in the datasheet (24590-LAW-MAD-LVP-00006, *24590-LAW-MA-LVP-EXHR-00001A/B/C - Exhauster Data Sheet - LAW Offgas Exhauster*). The exhausters are designed to provide flow rates ranging from a minimum of 1550 ACFM (per exhauster) at an inlet pressure of −78 in. WG, up to a maximum design flow rate of 4760 ACFM (per exhauster), at an inlet design pressure of −163 in. WG. The design maximum exhauster inlet temperature is 250°F, compared to a normal inlet temperature estimated to range from 107 to 120°F. The exhausters are designed for a maximum expected discharge temperature of 315°F, compared to a maximum calculated design condition of 290°F.

The exhausters are designated as SS to reliably provide their confinement function. The automatic PCJ speed adjustment is overridden as necessary by three PPJ interlocks. The overriding safety interlocks are described in detail in Section 4.1.6.2.1.5. The loss of power reconfiguration interlock, the low vacuum header interlock, and the excessive header vacuum reconfiguration interlock automatically trip all three exhauster ASDs to a predetermined speed setpoint. Auto-starting the third exhauster and running all three exhausters at the same speed ensures two exhausters provide the motive force to maintain system confinement should there be a single failure that shuts off one of the three exhausters.

In addition to tripping the three exhausters to a setpoint speed, the PPJ interlocks make other adjustments in the offgas system. This establishes a known LOP/LVP configuration that ensures that melter depression can be maintained without exceeding the design vacuum of the LOP system components. The loss of power interlock shuts off feed to the melters and limits other loads in the offgas system to ensure there is sufficient UPS battery power to run the exhausters for 2 hr. cold cap burn-off time in the melters.

4.1.1.2.7 LVP Piping Downstream from the Exhausters

Refer to P&IDs: 24590-LAW-M6-LVP-00002006
24590-LAW-M6-LVP-00002007
24590-LAW-M6-LVP-00002002

The outlet pipes from the three exhausters recombine back into a single 18 in. pipe. The offgas pipe traverses the building (at elevation +48 ft.) and extends up the facility exhaust stack structure. The melter offgas exhaust is discharged at an elevation of approximately 200 ft. This elevated release is credited to limit potential exposure of facility and site workers in the event of an unmitigated release off nitrogen oxides through the offgas system (no credit is taken for reduction of nitrogen oxides in the SCR in the unmitigated accident analysis for the LAW offgas system).

This section of the LVP system is slightly pressurized. The offgas piping downstream from the exhausters is relied on to confine the offgas through the stack. The offgas piping is insulated due to compression heat added to the offgas stream by the exhausters. There are no active mechanical components in this portion of the system. The offgas piping contains flanged test/injection ports for performing permit related tests and multiple nozzles that are connected to the stack monitoring system (SDJ) sample and return lines. This portion of the LVP piping also contains an in-line flowmeter (SDJ-FE-2113) and humidity detector (SDJ-ME-2130) that are part of the SDJ system. The stack monitoring room, L-0320, is located at elevation +48 ft. of the facility. The SDJ system is separate from the offgas system and is described in a separate system description document.

A drain line comes off the offgas piping in the low spot between the SDJ system and the stack. The drain line routes condensate back to the bottom of the caustic scrubber. The stack condensate flow along with the bottoms from the caustic scrubber gravity drain through a hydraulic seal loop to the caustic collection vessel (LVP-TK-

00001). The drain line contains a restriction orifice to limit potential recirculation of offgas through the drain back to the intake side of the exhausters. The drain line is equipped with a local observation glass and flow meter to detect flow of liquid through the drain.

4.1.1.2.8 Vessel Vent Connection to the LVP System

Refer to P&IDs: 24590-LAW-M6-LVP-00001001
24590-LAW-M6-LVP-00002001
24590-LAW-M6-LVP-00003001

The vessel vent header ties into the LVP offgas piping just before the HEPA preheaters, at the LVP header. The LVP system draws on the vessel vent header, maintaining the vessels under slight negative pressure, confining the vessel offgases and any entrained aerosols/particulate. The vessel vent stream is treated along with the melter offgas stream by the LVP system. Another purpose of vessel vent connection is to draw flammable gases out of the process vessels. (A minimum flow of purge air is introduced to each vessel to keep their atmospheres below flammable limits).

As shown in Figure 4-1, the vessel vent draws on (via the LOP/LVP system) the process vessels in the WPC. These vessels include LCP-VSL-00001/00002, LFP-VSL-00001/00002/00003/00004, and RLD-VSL-00003/00004/00005. The exhaust lines from each vessel combine in a main 8 in. line. This line splits into an 8 in. line, containing a PCV (PV-0072) and a parallel 4 in. bypass line. The 4 in. bypass line around the PCV contains an orifice (LVP-RO-00001) which ensures a minimum flow from the process vessels even during complete closure of the PCV, or isolation of the PCV for maintenance. The PCV is modulated automatically to maintain the desired vacuum in the vessel vent header.

The main 8 in. vessel vent line and the 4 in. bypass line recombines downstream from the PCV. The vessel vent line and the two 10 in. primary offgas lines are then combined into the 18 in. LVP header, just upstream of the HEPA preheaters. There are three overriding safety interlocks on this LVP header that can manipulate the vessel vent PCV (LVP-PV-0072). On detection of high pressure (indicating potential reduced vacuum in the melters) or detection of excessive vacuum at the LVP header, or detection of loss of power to the LOP/LVP offgas system the interlocks trip the LOP/LVP system to a known safe state, which includes a trip of the vessel vent PCV to its fully closed position. This limits flow from the process vessels to the amount that can be drawn through the orifice in the bypass line. The limited flow through the orifice limits the vessel vent load on the LVP exhausters, which are also tripped to a setpoint speed. The orifice is sized to ensure the vessel vent flow into the LVP system is sufficient to maintain confinement on the vessels and to keep the vessels below the lower flammability limit.

4.1.2 Boundaries and Interfaces

Relative to the offgas stream, the LOP/LVP system boundary starts at the interface of the film coolers with the melters and continues through the facility exhaust stack. Systems interfacing with the LOP and LVP systems are summarized in Table 2-2 and Table 2-3, respectively.

Table 4-1 Not used.

Table 4-2 Not used.

4.1.3 Physical Layout and Location

Refer to the following general arrangement plan elevation drawings for the LAW Facility:

Elevation +3 ft.	24590-LAW-P1-P01T-00002
Elevation +28 ft.	24590-LAW-P1-P01T-00004
Elevation +48 ft.	24590-LAW-P1-P01T-00005
Elevation +68 ft.	24590-LAW-P1-P01T-00006

The film coolers are in the primary (EO1) and secondary or standby (WO1) offgas ports in the melter lid. Both ports are on the north side of the melter, in the melter gallery at elevation +3 ft. They are located to accommodate the shortest paths available to their associated SBS. The SBS vessels are in the WPC adjacent to their respective melter. There are special high temperature penetrations through the wall for the two offgas lines. Figure 4-18 shows the relative locations of the two melters, SBS vessels, SCVs, and WESPs.

Figure 4-18 Layout of LAW Facility Wet Process Cells

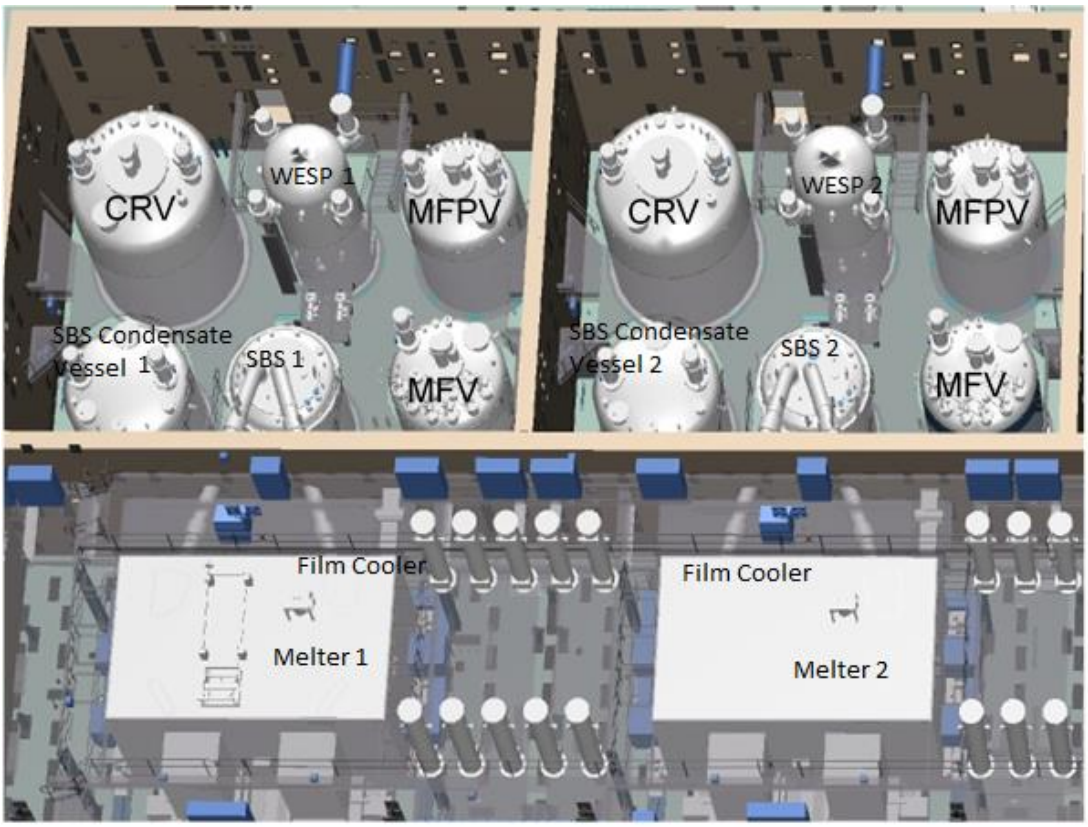

<= Wet Process Cells

SBS vessels LOP-SCB-00001 and LOP-SCB-00002, along with their associated SBS Condensation Vessels (LOP-VSL-00001 and LOP-VSL-00002) are in WPC rooms (L-0123 and L-0124), at elevation +3 ft.

The WESPs (LOP-WESP-00001/00002) are located at elevation +3 ft. in the same rooms (L-0123 and L-0124, respectively) of the process cell as their corresponding SBS and supporting LOP, LFP, and LCP collection vessels.

The HEPA filters (LVP-HEPA-00001A/00001B, LVP-HEPA-00002A/00002B and LVP-HEPA-00003A) and the HEPA preheaters (LVP-HTR-00001A/B and LVP-HTR-00003A/B) are in room L-0304H at elevation +48 ft.

The two carbon bed adsorbers (LVP-ADBR-00001A/00001B) are mounted on a common skid (LVP-SKID-00001) located in room L-0304F, at elevation +48 ft.

The LAW SCO/SCR skid (LVP-SKID-00002) is to be in room L-0304F at elevation +48 ft. The ammonia / air dilution skid (LVP-SKID-00003) is next to the SCO/SCR in room L-0322A.

The caustic scrubber (LVP-SCB-00001) is at elevation +48 ft. in the open space L-0304 and extends through the 68 ft. level into an extension in the roof and is covered by an access hatch. The caustic collection tank is in room L-0218 at elevation +28 ft.

The exhausters (LVP-EXHR-00001A/00001B/00001C) are located at elevation +48 ft. of the facility, in rooms L-0304C, L-0304D, and L-0304E (refer to general arrangement drawing 24590-LAW-P1-P23T-00052, *LAW Vitrification Building Equipment Location Plan El. 48 ft. - 0 in. / Area 5*).

The exhaust stack is located on the exterior of the LAW Facility and extends above the roof on the northwest corner. The stack is just under 200 ft. tall.

4.1.4 Principles of Operation

Note: An overview is provided below. This section will be updated after technical manuals to support a more detailed discussion are complete.

4.1.4.1 Offgas Composition

Melter offgas is generated from the vitrification of LAW slurry feed by joule-heated ceramic melters. The offgas consists primarily of:

- Air from in leakage into the melter, instrumentation, purges, and melter bubbler operation
- Water evaporated from the melter feed and cold cap chemical reaction products
- Acid gases (e.g., hydrogen chloride, hydrogen fluoride) generated from anion reaction
- Priority pollutants (e.g., nitrogen and sulfur oxides) generated from anion reaction
- Greenhouse gases (e.g., carbon dioxide) generated from anion reaction and hydrocarbon combustion
- Aerosols from glass dried melter feed and melter cold-cap reaction solids
- Semi volatile metals or oxides generated from the molten glass pool
- Soluble radioactive materials not partitioned to the High-Level Waste Facility

Air is injected at the film coolers to cool the offgas stream and to prevent solids buildup in the film coolers. Air is also added for melter plenum pressure control at the film coolers. Airflow is adjusted to facilitate melter pressure control (refer to Section 4.1.1.1.2)

4.1.4.2 Process Operation

A primary function of the LOP system is to control melter plenum pressure. Melter emissions primarily consist of air, water in the form of steam, and decomposition gases. The rate of emission is highly variable and prone to surges. The variability is mostly from the rate of steam generation as slurry interacts with the hot melter surface

and cold cap. To accommodate the rapid variation in offgas flow, excess air is fed to the system as a baseline operation. The quantity of this pressure control air is adjusted by a control valve, which modulates air addition based on the melter pressure signal. The melter is also designed to allow air leakage into the system to purge the corrosive hot gases out of potential dead spots. This leakage air will also vary based on melter pressure, further mitigating flow surges.

Hot, particulate-laden offgas exits the melter and is first cooled by the film cooler, then quenched in the SBS. Large particulate and water are removed in the water-filled bed; gases exit saturated with water at 140°F, the SBS water temperature. The condensate is collected and recycled. The quenched offgas is then sprayed with a fine mist of water at the inlet of the WESP, which enhances the effectiveness of the charged plates of the WESP.

A high flow water spray is used at the top of the WESP to periodically remove collected particulate from the collector plates. The temperature of the offgas is then raised by 20°F to avoid potential condensation of water as the final particulate removal takes place in the HEPA filters. The main function of the HEPA filters is the removal of radioactive particulate to minimize the radioactive contamination of the remaining offgas treatment equipment and the exhausters.

The remainder of the offgas equipment (downstream from the HEPA filters) is focused on toxic gas removal. The mercury absorber uses sulfur impregnated activated carbon to bind with the mercury and hold it on the bed. The granulated activated carbon is mixed with a zeolite material to enhance heat removal from the bed. The activated carbon will absorb many different chemicals exothermally, which can cause the bed to heat up. Carbon oxide levels are monitored as a sign of carbon combustion, which may occur due to local hot spots in the bed.

There are two absorber units piped in a lead–lag configuration to provide initial clean up and polishing. Each primary carbon bed is followed by a guard or secondary bed containing an acid gas absorbent (Sofnolime®). These absorber beds are positioned before the catalyst skid to remove or reduce the elements that could poison the catalyst, primarily the mercury, sulfur, and halides.

Gases from the carbon beds are sent to an economizer heat exchanger to collect energy from the hot gases exiting the catalyst skid. The skid outlet gases are partially cooled and the inlet gases warmed before entering a preheater, which brings the gases to the required catalyst operating temperature.

Residual organic constituents and products of incomplete combustion are oxidized on platinum catalyst (BASF VOCat™ 300S) in the SCO. Inside the SCR, nitrogen oxides react with ammonia gas over a vanadium/titanium catalyst (BASF VNX™ 300) to form nitrogen gas and water. The ammonia gas is supplied from the AMR system (from vessels AMR-VSL-00003/00004, located outside the plant). The ammonia is vaporized at the AMR vessels and fed to the ammonia dilution skid (LVP-SKID-00003), where it is diluted with air and injected into the SCR.

The output gases from the SCR pass back through the recuperative heat exchanger (LVP-HX-00001) to be cooled before passing on to the caustic scrubber. The offgas stream is further cooled by an atomized water spray upon entering the caustic scrubber for final acid gas removal. The caustic in the scrub solution absorbs sodium dioxide and other acid gases, including carbon dioxide, which forms a buffered solution (ranging from pH = 9.5 to 10) for stable operation of the scrubber. The buffer solution is pumped over a structured packing to contact the offgas. A mist eliminator located within the top of the scrubber is the final treatment step.

The cooled gases from the caustic scrubber are sent to the stack by the seven stage centrifugal exhausters. Three exhausters are provided. Two exhausters are normally operating, with the remaining exhauster in standby. Duty/standby position is rotated between the three exhausters to extend life and to allow for routine maintenance.

Should one of the two operating exhausters fail or shut down, the standby exhauster automatically starts and spins up to the proper speed to ensure continued confinement function by the offgas system.

Offgas is monitored for nitrogen oxides, carbon monoxide, total hydrocarbons and radioactivity at the exhaust stack.

4.1.5 System Reliability Features

This section describes the attributes of the LOP/LVP system that increase overall reliability. The offgas system provides a confinement function and a treatment function. Of primary importance is the safety function of the offgas system to maintain confinement of the toxic NO_x produced by an operating melter. This hazard exists whenever there is a cold cap in a melter. The safety confinement function of the offgas system can be met without crediting the treatment functions of the offgas system. This goal can be accomplished even when the carbon beds, catalyst skid, and scrubbing function of the caustic scrubber are bypassed, if the confinement boundary remains intact and the exhausters maintain proper flow and vacuum in the system. In the case of maintenance activities that involve opening the confinement boundary, the offgas system is generally designed so that treatment units can be isolated by valves or blinds while offgas flow is bypassed around the area being maintained. The feed to the melter will also be shut off before the maintenance activity to remove the NO_x hazard.

An additional reliability goal is to support a high availability of the LAW Facility to produce glass. This goal requires being able to keep the offgas treatment units operating properly, with minimal downtime. Although there are two LOP trains and two carbon bed adsorbers, the system is not fully redundant from a treatment standpoint. The maintenance bypass allows the offgas from both melters to flow through one LOP train to support maintenance on the opposite LOP train. However, the melters are idled when using this path. The carbon beds are run in series to meet their permit function. Valve permissives do not currently allow for a carbon bed to be left online while the second carbon bed is isolated for maintenance.

The discussions below address features that enhance reliability for the confinement and treatment functions of the offgas system. Reliability is improved by minimizing ways in which the system can fail, or by minimizing the impact of failures. Reliability provisions include equipment redundancy, diversity, physical separation, features that provide mechanisms for online testing and maintenance, automatic fault detection and response, and fail-safe states.

Film Coolers and Pipe Spools to SBS. Film cooler air keeps the film coolers in the proper temperature range and minimizes solids buildup. The water cleaning capability keeps the film coolers from plugging. These features extend operating life.

The standby film cooler on each melter provides an additional path to the SBS, if needed, in the event of an outsized melter surge. This increases the availability of the confinement function and minimizes the likelihood of the melter feed system being shut down due to a melter plenum high pressure trip.

On detection of high temperature in the offgas pipe spool, an additional air in leakage path is opened into the film cooler. This protects the offgas pipe spools and bellows from potential overheat damage.

Bypass maintenance path. The maintenance bypass allows the offgas from both melters to flow through a single LOP train to support maintenance on the opposite LOP train. However, both melters must be idled when using this path. This feature ensures the reliability of the confinement function of the offgas system, but is not credited to improve plant availability for glass production.

SBS and SCV. The SBS is equipped with a standby inlet line (10 in. downcomer) that is connected to the standby film cooler at the melter and to the maintenance bypass path. This allows offgas from both idled melters to flow through one SBS and WESP, to support maintenance on the opposite LOP train. This feature ensures the reliability of the confinement function of the offgas system.

The inlet line standpipes are double-walled. This design reduces the temperature gradient in the standpipes and thereby reduces the likelihood of solids buildup, increasing the service life of the SBS. The double-walled design also protects the soft seals in the SBS lids, obviating the need for O-ring replacement between normal maintenance activities.

Cooling the offgas stream and condensing process steam is an essential function protecting the downstream equipment. Chilled water to the SBS is split into separate coil and jacket supplies to increase reliability. The SCV cooling jacket provides an additional, separate chilled water source.

The SBS is equipped with both a process level instrument and a safety level instrument. The water purge pumps supporting the SBS and the condensate purge pumps supporting the SCV are redundant, increasing the reliability of the SBS function. The cantilever pump design for the condensate purge pumps is highly reliable, with no moving seals or bearings in the pump head exposed to process fluid.

The valve bulge (LOP-BULGE-00001) allows for maintenance on the valves and in-line instruments, reducing the need for in-cell entries. The valve actuators are located outside the shield bulge for access.

WESPs. The WESPs have no moving parts and are self-cleaning and are therefore low maintenance. To reduce the problems that can occur from arcing, the WESP design includes a warm dry air purge over the electrical connections to the electrodes, which is intended to prevent moisture from lowering the resistance of the insulating air. Voltage and spark monitoring built into the WESP control system also minimizes the likelihood of arcing and extends operating life.

HEPA preheaters. The HEPA preheater system design provides manual isolation valves on the offgas inlet and outlet piping of both preheater assemblies such that one preheater could be isolated and held in standby as the redundant preheater. A single preheater has sufficient capacity to protect the HEPA filters from moisture. However, the final design of the preheater controls and interlocks are on hold and cannot be accurately depicted now.

The HEPA preheaters are connected to backup UPS power. In the event of loss of power, the UPS backup power ensures the preheaters continue to perform their function for the 2 hr. cold cap burnoff time of the melters.

Safety controls on the preheaters back up the normal control loop to ensure the preheaters do not fail high and produce temperatures that could adversely affect the downstream HEPA filters or carbon beds.

HEPA filters. Each of the two independent HEPA filter trains provides double HEPA filtration of the offgas stream. Either HEPA filter train can be placed in service from the control room by actuating inlet and outlet isolation valves. This feature provides redundant HEPA filtration equipment for continuous plant operation, while one HEPA train is isolated for maintenance.

To protect the HEPA filters, the offgas differential temperature across the preheaters is measured, controlled, and displayed. A low differential temperature alarm provides warning of preheater malfunction and a high temperature alarm is provided to protect the HEPA filter from high temperature damage. HEPA DP is monitored to detect plugging of the HEPAs so the filters can be changed out before they fail.

Carbon bed adsorbers. The adsorbers passively remove Hg and acid gases from the offgas stream. The capacity of the carbon beds provides 2 years of continuous operation before media changeout is needed. The offgas stream is filtered and heated before flowing through the beds. This minimizes the potential for particles or condensed water vapor to plug up the units over time. The discharge filters prevent particulate from media attrition from flowing into and adversely affecting the downstream catalyst skid. The acid gas removal function of the guard beds protects the downstream catalysts from poisoning.

The instrumentation provided on the adsorber units allows their operating performance to be monitored and remaining media life to be predicted such that media changeouts can be scheduled in advance to occur with other maintenance activities. This minimizes the impact of media changeout on glass production.

Although there are two adsorber units, they are not redundant. The units are normally operated in series. The skid bypass ensures the continued confinement function of the offgas system when the units are isolated for maintenance.

The safety interlocks on the carbon beds protect the confinement function of the offgas system. The differential CO_x interlocks close the inlet and outlet isolation valves and open the bypass valve, ensuring a fire in the beds is smothered while not interrupting offgas flow through the system. Other safety interlocks ensure the bed is bypassed if the unit starts to plug or if inlet temperature is too high. These interlocks protect the confinement function of the offgas system.

The adsorber vessels are designed for full vacuum and are provided with a pressure relief path and rupture disk. These aspects reliably protect the confinement boundary during upset conditions.

SCO/SCR skid. The offgas must be processed through the SCO/SCR skid whenever one or more melters is operating. The SCO and SCR catalysts have a design life of 5 years and a minimum service life of 3 years. The recuperative heat exchanger has a minimum expected service life of 15 years. The electric heater has a minimum service life of 5 years. Each of the five heating banks in the electric heater have a thermocouple attached to the sheath for monitoring over-temperature conditions. Each of these thermocouples has a high-high temperature alarm and is connected to a high temperature controller that is used to shut off the heater bank if it exceeds the high-high temperature setpoint.

The SCO/SCR skid is passive. There are no moving parts internal to the skid. The skid also has large chemical and thermal inertia. While the inertia slows the warmup and cool down of the skid, the inertia also acts as a buffer, stabilizing the overall offgas system.

Ammonia dilution skid. The ammonia dilution air skid, which has two air dilution trains, allows one train to be isolated for changeout of the HEPA filter or maintenance on the fan or valves while the other train supplies dilution air.

Skid bypass ensures the offgas system confinement function whenever the catalyst units are isolated for media replacement or maintenance.

Caustic scrubber. The caustic scrubber vessel is a passive treatment unit with no moving parts. The necessary services for the scrubber to perform the function for which it is designed are either fixed in place and reliable, or are redundant duplicate systems that have been provided to allow system maintenance without shutting down the scrubber.

All water additions are provided from a pressurized header. These additions include water to spray nozzles used to flush the demister cartridges and the bottom of the packed bed, and for incoming offgas cooling by the quench

sprays. Four quench spray assemblies are to be installed in the bottom of the scrubber vessel. Only three of the quench sprays will be needed, and the fourth can be installed when quench spray assembly maintenance or replacement must be performed. The system is designed for quench spray removal and replacement while the scrubber is in full operation.

Caustic addition to the caustic collection tank to maintain the correct buffer solution pH is provided by one of two redundant caustic pumps.

While there is only one pH system, the pH probe can be removed and replaced or calibrated without shutting down the scrubber. The scrubber can be operated indefinitely while relying on buffer solution grab samples and laboratory analysis for pH control.

Two redundant pumps circulate buffer solution from the caustic collection tank to the top of the packed section.

Two redundant pumps circulate buffer solution from the caustic collection tank back into the top of the tank to provide mixing of the solutions in the tank. These pumps also periodically pump excess buffer solution out of the tank to the RLD.

Exhausters. The exhausters are 2 out of 3 service (two duty exhausters with the third in standby). Should one of the two operating exhausters fail (as indicated by low DP across the exhauster, low shaft speed, or high bearing temperature), the third exhauster auto-starts and the trouble exhauster is shut down. This ensures that two exhausters are always running to maintain the confinement function of the offgas system.

In addition, the 2 out of 3 arrangement allows for periodic swapping of one of the duty exhausters with the standby exhauster. Rotating exhauster service in this way extends the wear across the three exhausters, extending exhauster life and maintenance intervals. The 2/3 service arrangement allows routine maintenance (bearing lubrication, coupler inspection) to be performed on the offline exhauster without affecting offgas flow.

The exhausters are sized to support the full range of offgas flow rates from single melter operation to two melters operating with maximum offgas. The exhausters are run 20% above and 20% below the upper and lower natural harmonic frequencies of the rotor. The ASDs will be programmed to prevent the exhausters from running near the resonant speeds except when quickly ramping through these speeds during spin up.

Shaft seals to the exhausters are provided with two sources of purge air. Should the ISA supply to an exhauster lose pressure, a backup air supply is automatically valved-in. The redundant air source enhances the reliability of the confinement function of the offgas system.

The exhausters are housed in different rooms and separate fire areas. Each exhauster room is cooled by its own dedicated cooling unit. This minimizes the potential for common cause failure of the exhausters. The exhausters and cooling units are provided with backup UPS power. In the event of a loss of power, the exhausters and their supporting cooling units remain running long enough to cover the 2 hr. cold cap burnoff in the melters.

Safety Interlocks. The system safety interlocks (LVP header excessive vacuum interlock, LVP header high pressure interlock, and loss of power reconfiguration interlock) ensure that the offgas system fails safe under accident conditions in which the system is drifting out of proper pressure range at the LVP header or if normal power is lost to the offgas system. These interlocks run the offgas system in a known configuration to ensure the confinement function is reliably maintained. Backup power is tripped-in if normal power is lost, to keep the exhausters, exhauster room coolers and HEPA preheaters running during the 2 hr. cold cap burnoff.

4.1.6 System Control Features

Note: The following sections describe the important control features that are used for operation and performance monitoring. System interlocks, bypasses, and permissives are described based on the technical baseline level 6 documentation. Refer to the control system logic drawings for additional detail.

Control of the LOP/LVP system is accomplished with various types of monitoring instrumentation, including its associated setpoints with feedback, to provide alarms, trips, interlocks, and indications of operation within the operation design envelope. The location for monitoring and controlling the LOP/LVP system is the control room.

A primary design criterion is to maintain a vacuum in the LOP/LVP system from the melter plenum to the exhausters to contain all hazardous and radiological constituents. The offgas piping must confine melter offgas and direct the offgas through the exhaust stack to ensure that facility workers, co-located workers, and public exposure standards are not exceeded during all operating and abnormal operating conditions and during all design basis natural forces events.

The variable speed exhausters automatically adjust to provide sufficient negative pressure in the LOP/LVP system. The LVP system draws on each set of primary equipment and melter. Melter pressure is controlled by varying air injection flow into the film cooler. The amount of air injected is then adjusted by action of a control valve at the WESP outlet. Header vacuum for both melters is maintained at the common connection point for the two offgas systems, upstream of the HEPA preheater units, to provide stable operating vacuum for each LOP train in which to discharge. This header vacuum setpoint is set to accommodate anticipated melter pressure transients without exceeding the response range of the WESP outlet valve for each melter. If an individual melter transient exceeds the WESP outlet valve response capability, melter pressure interlocks act on other pressure control sources, as previously described, to minimize melter offgas flow and open the standby offgas line. These actions reduce the likelihood of melter pressurization.

A loss of normal power event will be managed by automatic corrective action, which will place the system in a configuration that allows exhausters (on UPS backup power) to continue to direct the offgas flows through the stack and reduce the hazard until the cold caps burn off.

4.1.6.1 LOP System Control Features

An overview of the melter pressure controls is provided first, followed by a detailed description of the control features for each major component in LOP portion of the offgas system.

The process offgas system is designed to maintain −5 in. WG at the melter, which is below the pressure of the LAW C5V system. The gas generation rate (mostly steam) can vary widely. The challenge for the system is to maintain negative pressure in the face of this variation. Negative pressure in the melter cavity ensures that air leaks into the melter from the melter shielded enclosure. Leaks are engineered into melter components to clear corrosive vapors and to cool them. Besides the in-leakage air, several sources of air are supplied to the melter. The motive force to maintain this flow is provided by the LAW exhausters, located at the far end of the offgas train. Three 50% capacity exhausters provide vacuum to the system. The exhausters have variable speed drives that are adjusted to accommodate the overall airflow through the process, including both melters, with provision for a third melter if desired later. Exhauster speed is regulated based on pressure at the LVP HEPA preheaters. There is no direct logic tie from the melter pressure and the exhausters.

Melter plenum pressure is measured at three points. All the measurements are made against independent reference legs connected to the shield lid (C5V). The melter is equipped with a three-leg bubbler (pneumercators), which provides pressure, fluid density, and level from DP signals. LMP-PDT-1410 measures

the DP from the plenum to the annulus. This reading is compared to LMP-PDT-1411, which is measured at the backup film cooler to the annulus. There is comparison logic with the higher reading selected. That reading is then used to control air injection to the melter, at the film cooler.

4.1.6.1.1 Film Cooler and Submerged Bed Scrubber Control Features

The following sections describe the control features associated with the offgas path from the melter film coolers through the submerged bed scrubbers. Control features for the associated SCVs and supporting pumps and air and water utilities are also described.

4.1.6.1.1.1 System Monitoring

Film Coolers – Melter 1

Air addition to the primary film cooler is supplied from the PSA system as two sources. Airflow is monitored for a set amount of cooling air. Flow (scfm), temperature (LOP-TI-1113) and (LOP-PI-1403) pressure are monitored to provide air flow converted to standard conditions, LOP-FI-1113. In addition, flow of a modulated source of pressure control air are monitored and corrected using temperature (LOP-TI-1140) and the common pressure (LOP-PI-1403) to provide air at standard conditions (LOP-FI-1140). Sufficient airflow is necessary for the film cooler to function.

Air is added to the standby film cooler for cooling and to purge the standby offgas line. Airflow is measured at LOP-FI-1108 (scfm), and no conversions are made to standard conditions.

The temperature of the combined stream of melter exhaust and primary film cooler air is monitored at LOP-TI-1052 (°F). Temperature is measured at LOP-TI-1062 (°F). A high temperature alarm LOP-TI-1062 is provided. The temperature is monitored to verify that the offgas spool design temperature is not exceeded.

The temperature of the standby offgas spools is monitored at LOP-TI-1153 (°F) and LOP-TI-1066 (°F).
Each film cooler has two cleaning nozzles: one of the film cooler walls and one for the offgas line. All the nozzles operate with locally set and indicating air and water flow rates. When not cleaning, an air purge is maintained, also set with local indication. Expected flow rates and timing have been determined in scale testing. The pressure in the primary offgas line is monitored at LOP-PI-1065 (psig), located at the bend just above the SBS. This pressure should be compared to melter plenum pressure to calculate the DP across the film cooler and offgas line. A rise in DP signals solids buildup in the area.

Film Coolers – Melter 2

Air addition to the primary film cooler is supplied from the PSA system as two sources. Airflow is monitored for a set amount of cooling air. Flow (scfm), temperature (°F), and pressure (psig) are monitored to provide air converted to standard conditions, LOP-FI/TI-2113 and LOP-PI-2403. In addition, a modulated source of pressure control air is monitored by LOP-FI/TI-2140 (psig, °F), using the common pressure to provide air at standard conditions. Sufficient airflow is necessary for the film cooler to function.

Air is added to the standby film cooler for cooling and to purge the standby offgas line. Airflow is measured at LOP-FI-2108 (scfm), and no conversions to standard condition are made.

The temperature of the combined stream of melter exhaust and primary film cooler air is monitored at LOP-TI-2052 (°F). Temperature is measured redundantly at LOP-TI-2062 (°F). The temperature is monitored to verify that the offgas spool design temperature is not exceeded.

The temperature of the standby offgas spools is monitored at LOP-TI-2153 (°F) and LOP-TI-2066 (°F).

Each film cooler has two cleaning nozzles: one of the film cooler walls and one for the offgas line. All the nozzles operate with locally set an indicating air and water flow rates. When not cleaning, an air purge is maintained, also set with local indication. Expected flow rates and timing have been determined in scale testing.

The pressure in the primary offgas line is monitored at LOP-PI-2065 (psig), located at the bend just above the SBS. This pressure should be compared to melter plenum pressure to calculate the DP across the film cooler and offgas line. A rise in DP signals solids buildup in the area.

Submerged Bed Scrubber – Melter 1

The water level in the SBS, LOP-SCB-00001, is redundantly measured by a process instrument, LOP-LI-1063 (in), and an SS instrument, LOP-LI-1011 (in); both are radar-type devices. The water level is kept at its overflow point so that deviation is unlikely; if it occurs, loss of SBS function is possible.

The pressure in the primary offgas line, inlet to the SBS, is monitored at LOP-PI-1065 (psig), which is located at the bend just above the SBS. This pressure is compared to WESP inlet pressure LOP-PI-1039 (psig) to calculate the DP across the SBS, LOP-PDI-1039A (psi). A change in this DP is indicative of both water level and bed clogging. The pressure at the downstream (top) of the SBS bed is measure at LOP-PI-1072 (psig), which is located on the vent line from the condensate collection vessel. Pressure differences among these measurements could indicate/locate blockage or in-leak problems.

The SBS temperature is monitored to verify that proper cooling of the offgas is occurring. Offgas exit temperature is determined by this temperature, LOP-TI-1013. Actual offgas exit temperature is measured at LOP-TI-1038 (°F), which is used as the WESP inlet temperature.

The flow and temperature of the chilled water for cooling is monitored. SBS outlet cooling flow, at CHW-FI/TI-2207 (gpm, ºF), and CHW-FI/TI-2209 (gpm, ºF) for the cooling coils and vessel water jacket respectively. This data, together CHW-TI-2112 (°F), inlet water temperature can be used for SBS mass and energy balance calculations.

Condensate circulation flow (gpm) to the SBS is monitored together with the condensate temperature (°F) and density (lb./ft.^{3}) at LOP-FI/TI/DI-1015. Purge water flow from LOP-PMP-00003A /B to the RLD system is monitored at LOP-FI-1146 / FI-1147 (gpm).

Submerged Bed Scrubber – Melter 2

The water level in the SBS, LOP-SCB-00002, is measured by a process instrument, LOP-LI-2063 (in) and an SS instrument, LOP-LI-2011 (in); both are radar type devices. Water level is kept at its overflow point so that deviation is not likely; if it occurs, loss of SBS function is possible.
The pressure in the primary offgas line, inlet to the SBS is monitored at LOP-PI-2065 (psig), located at the bend just above the SBS. This pressure is compared to WESP inlet pressure LOP-PI-2039 (psig) to calculate the DP across the SBS, LOP-PDI-2039A (psi). A change in this DP is indicative of both water level and bed clogging. Pressure at the downstream (top) of the SBS bed is measure at LOP-PI-2072 (psig), which is located on the vent line from the condensate collection vessel. Pressure differences among these measurements could indicate/locate blockage or in-leak problems.

The SBS temperature is monitored to verify that proper cooling of the offgas is occurring. Offgas exit temperature is determined by this temperature, LOP-TI-2013 (°F). Actual offgas exit temperature is measured at LOP-TI-2038 (°F), which is used as the WESP inlet temperature.

The flow (gpm) and temperature (°F) of the chilled water for cooling is monitored: SBS outlet cooling flow, at CHW-FI/TI-2213, and CHW-FI/TI-2215 for the cooling coils and vessel water jacket, respectively. This data, together with CHW-TI-2112 (°F), inlet water temperature, can be used for SBS mass and energy balance calculations.

Condensate circulation flow (gpm) to the SBS is monitored together with the condensate temperature (°F) and density at LOP-FI/TI/DI-2015 (lb./ft^3). Purge water flow from PMP-00006A/B to the RLD system is monitored at LOP-FI-2146/FI-2147 (gpm).

Submerged Bed Scrubber Condensate Collection Vessel – Melter 1

The level rise and fall in the SBS condensate collection vessel, LOP-VSL-00001, is monitored by LOP-LI-1018A (in) as condensate collects and is discharged to RLD on a batch basis.

The flow and temperature of the chilled water for cooling is monitored (vessel outlet cooling flow, at CHW-FI/TI-2211 [gpm, °F], for the vessel water jacket). This data, together with CHW-TI-2112 (°F), inlet water temperature, can be used for SBS mass and energy balance calculations.

Condensate pump operation, LOP-PMP-00001/00002, is monitored and indicated to show the status of the two pumps at LOP-YC-1019A and LOP-YC-1020A. It is expected that one pump is running.

Submerged Bed Scrubber Condensate Collection Vessel – Melter 2

The level rise and fall in the SBS condensate collection vessel, LOP-VSL-00002, is monitored by LOP-LI-2018A (in) as condensate collects and is discharged to RLD on a batch basis.

The flow and temperature of the chilled water for cooling is monitored (vessel outlet cooling flow, at CHW-FI/TI-2217 [gpm, °F], for the vessel water jacket). This data, together CHW-TI-2112, inlet water temperature, can be used for SBS mass and energy balance calculations.

Condensate pump operation, LOP-PMP-00004/-00005, is monitored and indicated to show the status of the two pumps at LOP-YC-2019A and LOP-YC-2020A. It is expected that one pump is running.

4.1.6.1.1.2 Control Capability and Location

Most control actions are taken through the PCJ system, in the control room. A few operations are set locally; these are described here.

Purge airflow to the melter 1 standby film cooler, LOP-FCLR-00002, is manually set by valve LOP-V-10026. Airflow is indicated at LOP-FI-1108 (acfm). The valve is at elevation +32 ft., above the melter in room L-0222. Purge airflow to the melter 2 standby film cooler, LOP-FCLR-00004, is manually set by valve LOP-V-09794. Airflow is indicated at LOP-FI-2108 (scfm). The valve is at elevation +32 ft., above the melter in room L-0222. The PSA pressure is reduced to 25 psig before use in the film coolers. Both the film cooler purge air and pressure control air are reduced to avoid over pressure in the melter. Dual pressure controllers are provided to accommodate calibration and maintenance. Melter 1 film coolers are supplied from LOP-PCV-1121 with LOP-PI-1133 (psig) and LOP-PCV-1103 with LOP-PI-1134 (psig). Melter 2 film coolers are supplied from LOP-PCV-2121 with LOP-PI-2133 (psig) and LOP-PCV-2103 with LOP-PI-2134 (psig). The PCVs are adjusted locally as read by the associated gauge.

Melter 1 SBS condensate circulation flow –The output of the condensate pumps LOP-PMP-00001/-00002 is sent to a bulge, LOP-BULGE-00001, on the process cell charge floor, room L-0202. A manual valve, V-10053, in the bulge is adjusted to set the SBS circulation flow on LOP-FI-1015 (gpm).

Melter 2 SBS condensate circulation flow –The output of the condensate pumps LOP-PMP-00004/-00005 is sent to a bulge, LOP-BULGE-00002, on the process cell charge floor, room L-0202. A manual valve, LOP-V-10053, in the bulge is adjusted to set the SBS circulation flow on LOP-FI-2015 (gpm).

Film cooler cleaning sprays and offgas line sprays are manually set and then actuated from the control room (refer Permissives, Section 4.1.6.1.1.5). Air purges to each spray nozzle are set at local rotameters. The water air spray mix is supplied to for all four nozzles on each melter. For melter 1, water flow is set with valve LOP-V-10015 with flow indicated at LOP-FI-1220 (gpm). Airflow is set with valve LOP-V-10014 with airflow indicated at LOP-FI-1218 (scfm).

For melter 2, water flow is set with valve LOP-V-10059 with flow indicated at LOP-FI-2220 (gpm). Airflow is set with valve LOP-V-10062 with airflow indicated at LOP-FI-2218 (scfm).

The two LOP bulges each have a pressure gauge for local indication of proper ventilation of the bulge, LOP-PI-1023 (psig), and LOP-PI-2023 (psig).

4.1.6.1.1.3 Control Actions

Control actions taken from the control room are described in this section.

<u>Pressure Control – Melter 1</u>

Film cooler air addition for pressure control – Airflow is modulated by valve LOP-PV-1105 in response to melter pressure. The air compensates for variable steam production in the melter. The measured airflow, LOP-FI-1140 (scfm), controls LOP-FV-1140, which modulates to control total primary (LOP) gas flow into the LVP header. This mechanism keeps film cooler airflow in the recommended range for operation of the film cooler. If pressure control airflow is low (to keep melter pressure low), then LOP-FV-1140 will open further to pull more air through the system. Higher system flow will induce higher pressure control airflow.

A manually operated bypass valve, LOP-YV-1002, between the two melters is available to ventilate one melter through the other for maintenance. The connection is made through the two bypass lines. Opening the valve would initiate feed shutdown in both melters.

<u>Pressure Control – Melter 2</u>

Film cooler air addition for pressure control – Airflow is modulated by valve LOP-PV-2105 in response to melter pressure. The air compensates for variable steam production in the melter. The measured airflow, LOP-FI-2140 (scfm), controls LOP-FV-2140, which modulates to control total primary (LOP) gas flow into the LVP header.

<u>Film Cooler Cleaning – Melters 1 and 2</u>

Film cooler and line spray cleaning is a manual action by the operator periodically or on indication of blockage. Air or water can be used, or a low flow purge can be directed to each cleaner. Valve permissives prevent mixing air and water. The permissives are summarized in the interlocks, bypasses, permissives section (Section 4.1.6.1.1.5).

SBS – Melter 1

Chilled water flows to the SBS coils and jacket are modulated by LOP-TV-1013A and LOP-TV-1013B, respectively, in response to SBS temperature LOP-TI-1013 (°F). A set of pressure relief valves protect each circuit: LOP-PSV-1149 and LOP-PSV-1084 on the coils, and LOP-PSV-1150 and LOP-PSV-1086 on the jacket.

Chilled water flow to the SCV jacket is modulated by LOP-TV-1015 in response to LOP-TI-1015 (°F), the temperature of the circulating condensate flow. A set of pressure relief valves protect the jacket, LOP-PSV-1151 and LOP-PSV-1088.

The condensate purge pumps, LOP-PMP-00001 and LOP-PMP-00002, located in the condensate collection vessel, are operated individually to prove a circulating flow. If a pump stops running, a low alarm from LOP-FI-1015 (gpm) will occur. The operator must align valves and start a pump at HS-1154/HS-1155; each pump has two flow paths, but only one (of four) path can be open through permissives. In addition, the condensate pumps have a priming sequence at startup to add priming water at valves LOP-YV-1156 and LOP-YV-1157 for a set period.

The water purge pumps LOP-PMP-00003A /B, are used for a batch transfer of water out of the SBS to RLD-VSL-00005. The discharge valve in LOP-BULGE-00001, LOP-YV-1033, or LOP-YV-1026, respectively, for the two pumps must be opened and the selected pump started at LOP-YC-1012A/YV-1069A.

SBS – Melter 2

Chilled water flows to the SBS coils and jacket are modulated by LOP-TV-2013A and LOP-TV-2013B, respectively, in response to SBS temperature LOP-TI-2013 (°F). A set of pressure relief valves protect each circuit: LOP-PSV-2149 and LOP-PSV-2084 on the coils, and LOP-PSV-2150 and LOP-PSV-2086 on the jacket.

Chilled water flow to the SCV jacket is modulated by LOP-TV-2015 in response to LOP-TI-2015 (°F), the temperature of the circulating condensate flow. A set of pressure relief valves protect the jacket, LOP-PSV-2151 and LOP-PSV-2088.

The condensate purge pumps, LOP-PMP-00004 and LOP-PMP-00005, located in the condensate collection vessel, are operated individually to prove a circulating flow. If a pump stops running, a low alarm from LOP-FI-2015 will occur. The operator must align valves and start a pump at HS-2154/HS-2155; each pump has two flow paths, but only one (of four) path can be open through permissives. In addition, the condensate pumps have a priming sequence at startup to add priming water at valves LOP-YV-2156 and LOP-YV-2157 for a set period. The water purge pumps LOP-PMP-00006A /B, are used for a batch transfer of water out of the SBS to RLD-VSL-00005. The discharge valve in LOP-BULGE-00002, LOP-YV-2033, or LOP-YV-2026, respectively, for the two pumps must be opened and the selected pump started at LOP-YC-2012A/YV-2069A.

4.1.6.1.1.4 Set Points and Ranges

Refer to 24590-LAW-JDX-LOP-00001, *Configuration Data Index for LAW Facility LOP System*, for a compilation of setpoints, ranges, and references.

4.1.6.1.1.5 Interlocks, Bypasses, and Permissives

Loss of Site Power

Loss of offsite power will trigger a series of actions across the facility; this is discussed elsewhere. Interlocks associated with the film coolers, SBS, and SBS condensate collection vessel are listed in the table below.

Function	Melter 1 Tag	Melter 2 Tag
Shuts off PSA supply to primary and standby film coolers, including the clean sprays	LOP-YC-1129	LOP-YC-2129
Shuts off DIW to cleaning sprays for primary and standby film coolers	LOP-YC-1109	LOP-YC-2109
Shuts off purge air to WESP electrodes	LOP-YC-1098	LOP-YC-2098
Opens WESP – LVP header valve	LOP-YC-1140	LOP-YC-2140

Melter 1 High Pressure Responses

The LMP-PDT-1410 measures plenum pressure. This reading is compared to LMP-PDT-1411, which is measured at the backup film cooler. There is comparison logic with the higher (absolute pressure) reading selected. There is a high-pressure alarm (only) and a high-high pressure alarm, LMP-PDSHH-1410A, and trip that is responsible for the following:

- Interrupts slurry feed to the melter by blocking air at LFP-YC-1208 and water at LFP-YC-1207 to the ADS pumps.
- Sets airflow to the film cooler and pressure control air to zero at LOP-PC-1105/FC-1113.
- Opens the valve to ventilate through the standby line at LOP-YC-1008.
- Shuts down the purges to the main and stand by film cooler cleaning sprays, LOP-YC-1222 / -1227 / -1122 / -1127.
- Prevents air or water cleaning of either the film cooler or stand by film cooler. LOP-YC-1219 and LOP-YC-1225.
- Closes valve LOP-FV-1050

Additional measurements are made at melter nozzle WS-1(A), which is redundantly measured by LMP-PDT-1528 and LMP-PDT-1529. The high-high pressure alarm from these instruments is a feed interlock that latches in to keep feed off until manually reset, as follows:

- Latches all the alarms listed above for high-high pressure, LMP-PDSHH-1410A, requiring manual reset to clear the action.
- Shuts off air to main and standby film coolers at LOP-YC-1129.
- Closes control valve for the vessel vent header, LVP-YC-0072.
- Shuts off purge air to WESP at LOP-YC-1098.
- Shuts off ammonia and ammonia dilution air to the SCR in the catalyst skid., LVP-YC-0528 /-0538.

In addition, a pressure relief valve located in the melter bypass line, SP-00003, lifts at +10 in. of water and relieves into the wet process cell.

SBS – Melter 1

The SBS level high-high, LOP-LSHH-1063, will stop DIW addition to the condensate collection vessel, closing valve LOP-YV-1029, will stop condensate pump flow, LOP-PMP-00001/2 (via LOP-YC-1019A/-1020A), and will initiate normal shut down of feed to melter 1.

The SBS level high-high at the SS LOP-LSHH-1011 will also stop the condensate pumps, LOP-PMP-00001/2, and water addition as above, as well as the following:

- Stop priming water to the condensate pumps at LOP-YC-1156 and LOP-YC-1157.
- Stop DIW to LOP-BULGE-00001 at LOP-YC-1148.
- Stop melter feed by shutting off demineralized water and air to the melter feed ADS pumps, closing valves LFP-YV-1207/1208.

Low-low level in the SBS, LOP-LSLL-1063 will stop melter feed by a normal shut down (with flushing), and stop a transfer by LOP-PMP-00003A /B at LOP-YC-1012A and LOP-YC-1069A.

Low-low level in the SBS at the SS LOP-LSLL-1011 will stop melter feed at LFP-YC-1207A and LFP-YC-1208A, water purge pump flow (LOP-YC-1012A and LOP-YC-1069A), and stop a transfer to the RLD vessels from the condensate pumps.

High-high temperature in the primary or standby offgas lines (LOP-TSHH-1152/1153) will cause an air purge valve to open allowing air from the WPC to be pulled into the offgas for additional cooling (LOP-YV-1401 for the primary film cooler and LOP-YV-1402 for the standby film cooler).

Water purge low low flow, LOP-FSLL-1146 /LOP-FSLL-1147, will stop transfer pump operation, LOP-PMP-00003A/B.

Film cooler cleaning with air or water is controlled by a set of permissives that allow only one source to be active to a user at any time. The permissives are summarized in Table 4-3 below.

Table 4-3 Film Cooler Spray and Line Spray Controls

Action	Melter 1 Valve	Melter 2 Valve	Comment
DIW cleaning supply	LOP-YV-1219	LOP-YV-2219	Permissive: PSA valve closed
DIW Flow	LOP-FI-1220	LOP-FI-2220	Preset
PSA cleaning supply	LOP-YV-1225	LOPO-YV-2225	Permissive: DIW valve closed
PSA flow	LOP-FI-1218	LOP-FI-2218	Preset
Cleaning pressure	LOP-PI-1144	LOP-PI-2144	Local – common supply
FCLR-00001/3 spray purge	LOP-YV-1127	LOP-YV-2127	Permissive: clean valve closed
FCLR-00001/3 purge flow	LOP-FI-1128	LOP-FI-2128	Preset
FCLR-00001/3 Spray Clean	LOP-YV-1123	LOP-YV-2123	Permissive: purge valve closed
FCLR-00001/3 Line purge	LOP-YV-1122	LOP-YV-2122	Permissive: clean valve closed
FCLR-00001/3 purge flow	LOP-FI-1104	LOP-FI-2104	Preset
FCLR-00001/3 Line clean	LOP-YV-1117	LOP-YV-2117	Permissive: purge valve closed

FCLR-00002/4 spray purge	LOP-YV-1227	LOP-YV-2227	Permissive: clean valve closed
FCLR-00002/4 purge flow	LOP-FI-1228	LOP-FI-2228	Preset
FCLR-00002/4 Spray clean	LOP-YV-1223	LOP-YV-2223	Permissive: purge valve closed
FCLR-00002/4 Line purge	LOP-YV-1222	LOP-YV-2222	Permissive: clean valve closed
FCLR-00002/4 purge flow	LOP-FI-1204	LOP-FI-2204	Preset
FCLR-00002/4 Line clean	LOP-YV-1217	LOP-YV-2217	Permissive: purge valve closed

SBS Condensate Collection Vessel – Melter 1

High-high level in the condensate collection vessel, at LOP-LSHH-1018A, will stop DIW water addition (LOP-YV-1090 and LOP-YV-1091) to the bulge, which drains to the vessel at LOP-YV-1029, and stop CHW to the SBS at LOP-YC-1056 and LOP-TC-1013A/CHW-YC-2005, which will limit continue condensate collection.

Low-low level in the condensate collection vessel, LOP-LSLL-1018A or RLD-VSL-00005 high-high level, RLD-LSHH-2142A, will stop the condensate pumps, LOP-PMP-00001/00002 at LOP-YC-1019 and LOP-YC-1020.

The condensate purge pumps, LOP-PMP-00001/00002 each have two flow paths. Only one pump and one flow path can be used at a time. Condensate purge pump LOP-PMP-00001 must align through LOP-YV-1035, to the SBS, or through LOP-YV-1036, to RLD. Condensate purge pump LOP-PMP-00002 must align through LOP-YV-1037 or LOP-YV-1054.

Melter 2 High Pressure Responses

The LMP-PDT-2410 measures plenum pressure. This reading is compared to LMP-PDT-2411, which is measured at the backup film cooler. There is comparison logic with the higher (absolute pressure) reading selected. There is a high-pressure alarm (only) and a high-high pressure alarm, PDSHH-2410A, and trip that is responsible for the following:

- Interrupts slurry feed to the melter by blocking air at LFP-YC-2208A /B and water at LFP-YC-2207A /B to the ADS pumps.
- Sets airflow to the film cooler and pressure control air to zero at LOP-PC-2105/FC-2113.
- Opens the valve to ventilate through the standby line, at LOP-YC-2008.
- Shuts down the purges to the main and stand by film cooler cleaning sprays, LOP-YC-2222/2227/2122/2127.
- Prevents air or water cleaning of either the film cooler or stand by film cooler. LOP-YC-2219 and LOP-YC-2225.
- Closes valve LOP-FV-2050

Additional measurements are made at melter nozzle WS-1(A), which is redundantly measured by LMP-PDT-2528 and LMP-PDT-2529. The high-high pressure alarm from these instruments is a feed interlock that latches in to keep feed off until manually reset. In addition, it is responsible for the following:

- Latches all the alarms listed above for high-high pressure, LMP-PDSHH-2410A, requiring manual reset to clear the action.
- Shuts off air to main and standby film coolers at LOP-YC-2129.
- Closes control valve for the vessel vent header, LVP-YC-0072.

- Shuts off purge air to WESP at LOP-YC-1098.
- Shuts off ammonia and ammonia dilution air to the SCR in the catalyst skid, LVP-YC-0528 /-0538.

There is also a pressure relief valve in the melter bypass line, SP-00006, which lifts at +10 in. of water and relieves into the WPC.

SBS – Melter 2

Excessive SBS level, LOP-LSHH-2063, will stop DIW addition to the condensate collection vessel at LOP-YV-2029 and stop condensate pump flow, LOP-YC-2019A/2020A.

The SBS high-high level at the SS LSHH-2011 will also stop the condensate pumps, LOP-PMP-00004/5, and water addition above, as well as the following:

- Stops priming water to the condensate pumps at LOP-YC-2156 and LOP-YC-2157.
- Stops DIW to LOP-BULGE-00002 at LOP-YC-2148.
- Stops melter feed by shutting off demineralized water and air to the melter feed ADS pumps by closing valves LFP-YV-2207/2208.

Low-low level in the SBS, LSLL-2063 will stop melter feed by a normal shutdown (with flushing), and stop a transfer by LOP-PMP-00006A/B at LOP-YC-2012A and LOP-YC-2069A.

Low-low level in the SBS at the SS LOP-LSLL-2011 will stop melter feed at LFP LFP-YC-2207A and LFP-YC-2208A, water purge pump flow LOP-YC-2012A and LOP-YC-2069A, and stop a transfer to the RLD vessels from the condensate pumps.

High-high temperature in the primary (LOP-TSHH-2152Z) or standby (LOP-TSHH-2153Z) offgas lines will cause an air purge valve to open allowing air from the WPC to be pulled into the offgas for additional cooling. LOP-YV-2401 and LOP-YV-2402.

Water purge low-low flow, LOP-FSLL-2146/2147 will stop transfer pump operation, LOP-PMP-00006A/B.

Film cooler cleaning with air or water is controlled by a set of permissives that allow only one source to be active to a user at any time (covered in previous table in this section).

SBS Condensate Collection Vessel – Melter 2

High-high level in the condensate collection vessel, at LOP-LSHH-2018A, will stop DIW water addition (LOP-YV-2090 and LOP-YV-2091) to the bulge, which drains to the vessel at LOP-YV-2029, and stop CHW to the SBS at LOP-YC-2056 and LOP-TC-2013A / CHW-YC-2006, which will limit continue condensate collection

The condensate purge pumps, LOP-PMP-00004/ LOP-PMP-00005 each have two flow paths. Only one pump and one flow path can be used at a time. Pump LOP-PMP-00004 must align through LOP-YV-2035, to the SBS, or through LOP-YV-2036, to RLD. Pump LOP-PMP-00005 must align through LOP-YV-2037, or LOP-YV-2054.

Low-low level in the condensate collection Vessel, LOP-LSLL-2018A, or RLD-VSL-00005 high-high level, LOP-LSHH-2142A, will stop the condensate pumps LOP-PMP-00004 / -00005 at LOP-YC-2019 and LOP-YC-2020.

4.1.6.1.2 Wet Electrostatic Precipitator Control Features

The following sections describe the system indications, alarms, and system control features associated with the WESPs (LOP-WESP-00001/00002). The purpose of the WESPs is to remove particulate and aerosols from the

offgas that the WESP receives from the submerged scrubber. It is intended that the WESP will remove sufficient particulate to the point that the offgas stream entering the HEPA preheaters are suitable for HEPA filtration after being heated to prevent moisture condensation during HEPA filtration.

Because the WESP is the last unit operation to remove particulate and aerosols from the offgas upstream of the HEPA filters, the particulate and aerosol removal efficiency of the WESP will directly determine the required HEPA filter change out frequency. The HEPA filter useful life before changeout will be determined by the HEPA filter DP maximum safe limit from particulate loading or the maximum ALARA radiation dose rate as limited by the radiation exposure to maintenance personnel during the contact filter change out, depending on whichever limit is reached first.

The two WESPs are located in the two separate melter offgas trains and their operating parameters, setpoints, and operations are the same.

4.1.6.1.2.1 System Monitoring

LOP-WESP-00001

Heated Plant Service Air Supplied to Electrode Housings (Melter 1 WESP Purge Airflow). It is necessary to supply heated air to the electrode housings to maintain dry electrode connections to prevent electrical arcing. To accomplish this, plant service air is heated to a temperature higher than the offgas stream entering the WESP. The heated dry air continuously purges the electrode housings, which prevents moist offgas air from entering the electrode housings. The power to the electric melter 1 WESP purge air heater (LOP-HTR-00001) is controlled by LOP-TDC-1092 (°F), which receives input from the entering offgas temperature displayed on LOP-TI-1038 (°F) (melter 1 SBS out temp.) and the heated air stream temperature displayed on LOP-TI-1050 (°F) (melter 1 WESP purge sir temp.). The controlled temperature difference is displayed on LOP-TDI-1092 (°F) (melter 1 WESP purge air to SBS offgas out temp.). All indicators and controls are in the control room. There is a high PCJ temperature alarm for the incoming offgas temperature displayed by LOP-TI-1038 (°F) (melter 1 SBS out temperature).

Melter 1 WESP Purge Air Heater Out Pressure. The heated air pressure is measured just downstream of the air heater and is displayed in the control room via LOP-PI-1081 (psig). There are no pressure alarms.

Melter 1 WESP Purge Airflow Rate. The heated air purge flow rate is critical to the air purge success. The flow rate is controlled by LOP-FC-1050, as indicated in the control room via LOP-FI-1050 (scfm). Both low and low-low flows are alarmed on the PCJ.

Melter 1 WESP Purge Air Pressure. The heated air pressure is measured again just upstream of where the header branches into five pipes connected to the WESP nozzles. This pressure is displayed in the control room via LOP-PI-1082 (psig). High pressure at this point is alarmed on the PCJ. Operator response to any of the of the alarms may include shutting off power to the WESP to prevent equipment damage from arcing.

Melter 1 WESP Level. The WESP is designed to drain free of liquid via a 3 in. pipe. The liquid level in the WESP is displayed in the control room via LOP-LI-1060 (in). High and high-high liquid level is alarmed on the PCJ. The level is also indicated via SS LOP-LI-1059, and the PPJ high-high interlock trip is displayed as LOP-LSHH-1059.

Melter 1 WESP Differential Pressure. The overall WESP DP from the inlet pipe to the outlet pipe is displayed in the control room via LOP-PDI-1039 (psi) and high DP is alarmed on the PCJ. The pressure at the offgas to the WESP inlet pipe is displayed via LOP-PI-1039 (melter 1 SBS out pressure). The pressure at the WESP outlet

pipe is displayed via LOP-PI-1049 (melter 1 WESP offgas out pressure). High melter 1 WESP offgas out pressure is alarmed on the PCJ.

Melter 1 WESP Offgas Flow. The flow rate of the offgas from the WESP outlet is displayed in the control room via LOP-FI-1049 (scfm) and is controlled by LOP-FC-1140 based on the flow rate of control air that is added to the film cooler.

Melter 1 WESP Offgas Out Temperature. The temperature of the offgas from the WESP outlet is displayed in the control room via LOP-TI-1047 (°F). High temperature is alarmed on the PCJ.

Critical WESP Operating Control Parameter Values Are Displayed in the Control Room. These control parameters are listed in the table below along with the instrument numbers for each instrument.

Control Parameter	Instrument Number	Units
Melter 1 WESP Electrode Power Supply PRI Voltage	LOP-EI-1075A	V
Melter 1 WESP Electrode Power Supply PRI Current	LOP-II-1074A	A
Melter 1 WESP Electrode Power Supply Spark Rate	LOP-SI-1095A	Sparks per minute
Melter 1 WESP Electrode Power	LOP-JI-1076A	kW
Melter 1 WESP Electrode Power Supply SEC Current	LOP-II-1077A	mA
Melter 1 WESP Electrode Power Supply SEC Voltage	LOP-EI-1078A	V

In addition to the instrumentation in the table above, a common trouble alarm (UA-1079) for these parameters warns the operator to check the remote terminal unit to determine which parameter caused the general trouble alarm. There is also a warning light that indicates the electrode power supply emergency stop switch (LOP-HA-1096A) has been actuated.

The vendor's PLC panel locally displays transformer high temperature, high oil temperature, high oil pressure, secondary voltage low, and secondary amps high.

LOP-WESP-00002

Heated Plant Service Air Supplied to Electrode Housings (Melter 2 WESP Purge Airflow). It is necessary to supply heated air to the electrode housings to maintain the electrode connections dry to prevent electrical arcing to ground. To accomplish this, plant service air is heated to a temperature higher than the offgas stream entering the WESP. The heated dry air continuously purges the electrode housings, which prevents moist offgas air from entering the electrode housings. The power to the electric melter 2 WESP purge sir heater (LOP-HTR-00002) is controlled by LOP-TDC-2092 (°F), which receives input from the entering offgas temperature displayed on LOP-TI-2038 (°F) (melter 2 SBS out temp.) and the heated air stream temperature displayed on LOP-TI-2050 (°F) (melter 2 WESP purge air temp.). The controlled temperature difference is displayed on LOP-TDI-2092 (°F) (melter 2 WESP purge air to SBS offgas out temp.). All indicators and controls are in the control room. There is a high PCJ temperature alarm for the incoming offgas temperature displayed by LOP-TI-2038 (°F) (melter 2 SBS out temperature).

Melter 2 WESP Purge Air Heater Out Pressure. The heated air pressure is measured just downstream of the air heater and is displayed in the control room via LOP-PI-2081 (psig). There are no pressure alarms.

Melter 2 WESP Purge Airflow Rate. The heated air purge flow rate is critical to the air purge success. The flow rate is controlled by LOP-FC-2050, as indicated in the control room via LOP-FI-2050 (scfm). Both low and low-low flows are alarmed on the PCJ.

Melter 2 WESP Purge Air Pressure. The heated air pressure is measured again just upstream of where the header branches into five pipes connected to the WESP nozzles, and this pressure is displayed in the control room via LOP-PI-2082 (psig). High pressure at this point is alarmed on the PCJ. Operator response to any of the of the alarms may include shutting off the power to the WESP to prevent equipment damage from arcing.

Melter 2 WESP Level. The WESP is designed to drain free of liquid via a 3 in. pipe. The liquid level in the WESP is displayed in the control room via LOP-LI-2060 (in). High and high-high liquid level is alarmed on the PCJ. The level is also indicated via SS LOP-LI-2059 and the PPJ high-high interlock trip is displayed as LOP-LSHH-2059.

Melter 2 WESP Differential Pressure. The overall WESP DP from the inlet pipe to the outlet pipe is displayed in the control room via LOP-PDI-2039 (psi) and high DP is alarmed on the PCJ. The pressure at the offgas to the WESP inlet pipe is displayed via LOP-PI-2039 (psi) (melter 2 SBS out pressure). The pressure at the WESP outlet pipe is displayed via LOP-PI-2049 (psi) (melter 2 WESP offgas out pressure). High melter 2 WESP out pressure is alarmed on the PCJ.

Melter 2 WESP Offgas Flow. The flow rate of the offgas from the WESP outlet is displayed in the control room via LOP-FI-2049 (scfm) and is controlled by LOP-FC-2140 based on the flow rate of control air that is added to the film cooler.

Melter 2 WESP Offgas Out Temperature. The temperature of the offgas from the WESP outlet is displayed in the control room via LOP-TI-2047 (°F). High temperature is alarmed on the PCJ.

Critical WESP Operating Control Parameter Values Are Displayed in the Control Room. These control parameters are listed in the table below along with the instrument numbers for each instrument.

Control Parameter	Instrument Number	Units
Melter 2 WESP Electrode Power Supply PRI Voltage	LOP-EI-2075A	V
Melter 2 WESP Electrode Power Supply PRI Current	LOP-II-2074A	A
Melter 2 WESP Electrode Power Supply Spark Rate	LOP-SI-2095A	Sparks per minute
Melter 2 WESP Electrode Power	LOP-JI-2076A	kW
Melter 2 WESP Electrode Power Supply SEC Current	LOP-II-2077A	mA
Melter 2 WESP Electrode Power Supply SEC Voltage	LOP-EI-2078A	V

In addition to the instrumentation in the table above, a common trouble alarm (LOP-UA-2079) for these parameters warns the operator to check the remote terminal unit to determine which parameter has caused the general trouble alarm. There is also a warning light that indicates the electrode power supply emergency stop switch (LOP-HA-2096A) has been actuated.

The vendor's PLC panel locally displays transformer high temperature, high oil temperature, high oil pressure, secondary voltage low, and secondary amps high.

4.1.6.1.2.2 Control Capability and Locations

The following components are manually operated during normal operations and are operated locally (at the panel/compartment).

DIW Misting Sprays Between Gas Inlet and Electrodes. The flow rate of the demineralized water used to wet the particulate in the incoming gas stream is controlled by manual globe valve LOP-V-10760, as indicated on FI-1052. Both the control valve and the flow indicator are located locally in the DIW supply line.

DIW Periodic Water Flush of WESP Particulate Collection Electrodes. The demineralized water flow rate to flush collected particulate from the WESP collectors is controlled by manual globe valve LOP-V-34060, which is locally located in the DIW supply line. No flow indication is provided that would allow the correct valve opening to set the flow at a specified flow rate.

DIW Supply Pressure. The LOP-PCV-1093 located locally on the DIW 2 in. supply line is set to reduce the header pressure down to a value that is suitable for operating both the misting sprays and electrode flush sprays.

4.1.6.1.2.3 Automatic and Manual Actions

Operator general response actions in responding to alarms are listed; however, specific actions will be communicated in alarm response operating procedures to be developed later.

Particulate Collection Electrode Automatic Power Control. To achieve maximum particulate collection efficiency, the power to the electrodes is automatically maintained at the proper level by the spark level/follower and the spark level limiter controls. These controls prevent sparking while still maximizing particulate collection.

Water Flush of WESP Particulate Collection Electrodes. Periodic water flush of the collection electrodes is required to restore efficient particulate removal capability. After electrical power, has been shut off to the electrodes, the demineralized water flush sequence can be initiated using manual switch LOP-HS-1070, which controls LOP-YV-1080 used in the flush sequence.

WESP Outlet Flow Control. Flow control valves LOP-FV-1140 and LOP-FV-2140, located downstream of each WESP, automatically control flow from each LOP train into the LVP system based on air injection rate into the associated melter's film cooler. Control air is introduced into each melter's primary offgas film cooler to adjust pressure while maintaining a relatively constant flow of noncondensable gas. If the melter vacuum moves from the normal control setpoint, the flow of control air is adjusted to return the plenum pressure to the setpoint. Changes to the control airflow rate, as measured on the air lines to each primary film cooler (at LOP-FI-1140 and LOP-FI-2140) are in turn used to adjust the opening of the offgas flow control valves downstream from the associated WESP. If the offgas generation rate begins to exceed the capacity of the primary line, the melter vacuum decreases. The film cooler control airflow rate decreases accordingly, which in turn causes the valve at the WESP to open, allowing more melter offgas flow. This control loop helps decouple the two melter systems and thereby limits interaction between the two legs of the primary offgas system.

4.1.6.1.2.4 Setpoints and Ranges

The safety related setpoints and ranges are documented in the technical safety requirements (TSR). (**TBD**)

The setpoints and ranges associated with PCJ indications that have an engineering basis are provided in 24590-LAW-JDX-LOP-00001.

The setpoints and ranges associated with the PCJ indications that are configurable by the operator are provided in the (**TBD**) *LAW Facility LOP/LVP System Tunable Report*.

4.1.6.1.2.5 Interlocks, Bypasses and Permissives

The following sections describe the important system interlocks, bypasses, and permissives associated with the two WESP systems, LOP-WESP-00001 and LOP-WESP-00002. In general, PCJ alarms (high or low) warn the operator of a parameter value that is exceeding the normal operating limits. There may also be PCJ interlocks that trip at the same time as the PCJ alarm to protect against equipment damage. The safety interlocks initiated by the PPJ system override the PCJ controls. It is intended that the PCJ system will be relied on to control the plant with the PPJ system providing the safety trip backup to the PCJ controls. The PPJ system alarms not only notify the operator that the control parameter is out of limits, but it also provides indication that the PPJ interlock has tripped the system to the safety design position. Permissives provide protection against manual or control actions until the system in question is in the correct configuration for the impending change in configuration (e.g., sufficient solution level in a tank before pump start). Refer to the detailed design documentation for additional detail.

WESP High-High Liquid Level Interlocks: Safety interlocks are actuated by the PPJ system only. There are also associated PCJ interlocks that are independent of the PPJ system. The PCJ provides high and high-high liquid level alarms. There is also a PCJ high-high interlock action that enacts the same function as the PPJ system.

LOP-WESP-00001. When the WESP liquid level, as indicated on LOP-LI-1059, reaches the PPJ high-high setpoint, the PPJ system shuts off all DIW to the WESP via LOP-LSHH-1059 by closing valve lOP-YV-1061. When the WESP liquid level as indicated on LI-1060, reaches the PCJ high-high setpoint, the PCJ shuts off all DIW to the WESP by closing valve LOP-YV-1061. At the same time, the DIW valve downstream of LOP-YV-1061 (LOP-YV-1080) is closed via LOP-YC-1080.

LOP-WESP-00002. When the WESP liquid level, as indicated on LOP-LI-2059, reaches the PPJ high-high setpoint, the PPJ system shuts off all DIW to the WESP by closing valves LOP-YV-2061. When the WESP liquid level, as indicated on LOP-LI-2060, reaches the PCJ high-high setpoint, the PCJ shuts off all DIW to the WESP by closing valves LOP-YV-2061. At the same time, the DIW valve downstream of LOP-YV-2061 (LOP-YV-2080) is closed via LOP-YC-2080.

Other Safety Interlocks That Change the WESP Configuration:

Melter High Pressure:

LOP-WESP-00001. When the melter pressure reaches the PPJ high setpoint, the PPJ system stops heated airflow to the WESP by closing valve LOP-FV-1050. At the same time, the pressure drop across the WESP is reduced by completely opening the WESP outlet valve LOP-FV-1140, and the DIW flow to the electrode flush sequence is also stopped via LOP-YC-1098 by closing valve LOP-YV-1098.

LOP-WESP-00002. When the melter pressure reaches the PPJ high setpoint, the PPJ system stops airflow to the WESP by closing valve LOP-FV-2050. At the same time, the pressure drop across the WESP is reduced by completely opening the WESP outlet valve LOP-FV-2140, and the DIW flow to the electrode wash sequence is also stopped via LOP-YC-2098 by closing valve LOP-YV-2098.

Loss of Normal Power:
LOP-WESP-00001. When loss of normal power is detected, the PPJ system stops heated airflow to the WESP by closing valve LOP-FV-1050. At the same time, the pressure drop across the WESP is reduced by completely

opening the WESP outlet valve LOP-FV-1140. Loss of normal power also stops DIW flow to the electrode wash sequence via LOP-YC-1098 by closing LOP-YV-1098.

LOP-WESP-00002. When loss of normal power is detected, the PPJ system stops heated airflow to the WESP by closing valve LOP-FV-2050. At the same time, the pressure drop across the WESP is reduced by completely opening the WESP outlet valve LOP-FV-2140. Loss of normal power also stops DIW flow to the electrode sequence via LOP-YC-2098 by closing LOP-YV-2098.

Electrical Startup and Operation Permissives:

LOP-WESP-00001. To operate the WESP power transformer/rectifier (T/R) from the PCJ, the operator places the local/remote selector switch (LOP-HY-1071) in the "remote" position. The PCJ operator then enables the T/R using start switch LOP-HS-1071B. The T/R set will start after the purge air airflow (LOP-FI-1050) and purge air temp (LOP-TI-1050) are proven for 15 min. The wash valve (LOP-YV-1080) must be closed for the T/R set to operate (LOP-ZSL-1080). If the valve is opened while the T/R set is enabled, the system will shut down.

LOP-WESP-00002. To operate the WESP power transformer/rectifier (T/R) from the PCJ, the operator places the local/remote selector switch (LOP-HY-2071) in the "remote" position. The PCJ operator then enables the T/R using start switch (LOP-HS-2071B). The T/R set will start after the purge air airflow (LOP-FI-2050) and purge air temp (LOP-TI-2050) are proven for 15 min. The wash valve (LOP-YV-2080) must be closed for the T/R set to operate (LOP-ZSL-2080). If the valve is opened while the T/R set is enabled, the system will shut down.

WESP Electrode Wash Sequence Permissives:

LOP-WESP-00001. The power to the electrodes must be de-energized (power off) before starting the wash sequence. To initiate and complete the WESP wash sequence, several permissives must be satisfied. If the power switch LOP-HS-1071B is switched off (or "stopped") from the PCJ (or locally), AND the primary transformer voltage and amperage are below safe limits (LOP-ISL-1074A, LOP-ESL-1075A), AND the secondary transformer amperage and voltage are also below limits (LOP-ISL-1077A, LOP-ESL-1076A), the DIW wash valve (LOP-YC-1080) receives an open permissive so the WESP can be washed.

LOP-WESP-00002. The power to the electrodes must be de-energized (power off) before starting the wash sequence. To initiate and complete the WESP wash sequence, the power switch LOP-HS-2071B is off (or stopped) from the PCJ (or locally). If the primary transformer voltage and amperage are below safe limits (LOP-ISL-2074A, LOP-ESL-2075A), AND the secondary transformer amperage and voltage are also below limits (LOP-ISL-2077A, LOP-ESL-2076A), the DIW wash valve (LOP-YC-2080) receives an open permissive so the WESP can be washed.

4.1.6.2 LVP System Control Features

The two 10 in. LOP train exhaust pipes combine at the 18 in. LVP header, the portion of the offgas line in front of the HEPA preheaters. The process vessel vent also connects to the LVP header. The LVP header contains important control features to regulate offgas system vacuum and flow from the process vessel vent. Following the LVP header, the primary equipment in the LVP system includes HEPA preheaters, HEPA filters, mercury mitigation adsorbers, thermal catalytic oxidizer (TCO)/reducer skid (and associated ammonia dilution skid), caustic scrubber, and centrifugal exhausters. Control features associated with LVP header are described first, followed by descriptions of the control features at each treatment unit, finishing with the exhausters.

4.1.6.2.1 LVP and Vessel Vent Header Control Features

The LVP header includes pressure instrumentation (LVP-PT-0070/LVP-PT-0071) used to modulate exhauster speed, and SS pressure instrumentation (LVP-PT-0139 and LVP-PT-0140) used to trip offgas system reconfiguration interlocks in the PPJ system under upset conditions.

The vessel vent header has a PCV (LOP-PV-0072) used to maintain proper vacuum in the WPC vessels.

4.1.6.2.1.1 System Monitoring

The LVP header pressure is monitored at LVP-PI-0070 and LVP-PI-0071 (psig). The high select from these two signals is used to modulate exhauster ADS speed (RPM), via LVP-PC-0023 (LVP-EXHR-00001A), LVP-PC-0020 (LVP-EXHR-00001B, and LVP-PC-0017 (LVP-EXHR-0001C). Header pressure is indicated on the PCJ.

Redundant LVP-PI-0139 and LVP-PI-0140 provide header pressure indication on the PCJ system. High and low pressure are alarmed on the PCJ ICN. Trip Alarm (LVP-PAHH-0139F), LVP-PT-0139 Bypassed (LVP-HA-0139), and LVP-PT-0140 Bypassed (LVP-HA-0140) are annunciated in PPJ.

4.1.6.2.1.2 Control Capability and Locations

There are no locally and manually operated controls located in this portion of the offgas system.

4.1.6.2.1.3 Automatic and Manual Actions

Vessel Vent Pressure Control Valve. Valve LVP-PV-0072 is located on the vessel vent header upstream of the vent header connection to the LVP header. The PCJ modulates this valve automatically based on reading of pressure at LVP-PI-0072. This control maintains the desired vacuum on the process vessels connected to the vessel vent header.

The position of this valve can also be manually adjusted as necessary, remotely through the PCJ, to support maintenance activities on the process vessels. For instance, the valve can be adjusted to control the in leakage rate into a vessel through an open flange during agitator or pump replacement.

The PCJ control of this valve is overridden by PPJ interlocks, as necessary. On detection of either excessive vacuum or high pressure at LVP header pressure instruments LVP-PI-0139, LVP-PI-0140, or on detection of loss of normal facility power, valve LVP-PV-0072 is closed by the PPJ interlock to limit the vessel vent load on the offgas system exhausters. Closing the valve does not cut off the flow from the process vessels. The bypass line around the valve contains an orifice (LVP-RO-0001) to limit flow, while still ensuring adequate venting of the vessels to accommodate purge airflow, vapor/gas production, and air displacement from vessel filling.

Safety Interlocks Tripped Based on LVP Header Pressure. The LVP excessive header vacuum and LVP low header vacuum interlocks are operated automatically by the PPJ system (refer to Section 4.1.6.2.1.5).

4.1.6.2.1.4 Setpoints and Ranges

The safety related setpoints and ranges are documented in the TSRs. (**TBD**)

The setpoints and ranges associated with PCJ indications that have an engineering basis are provided in 24590-LAW-JDX-LVP-00001, Rev 2, *Configuration Data Index for LAW Facility LVP System*.

The setpoints and ranges associated with the PCJ indications that are configurable by the operator are provided in the (**TBD**) *LAW Facility LOP/LVP System Tunable Report*.

4.1.6.2.1.5 Interlocks, Bypasses and Permissives

Pressure instruments LVP-PI-0139 and LVP-PI-0140 provide the pressure input signals for the PPJ LVP low header vacuum, and LVP excessive header vacuum interlocks.

LVP Header Low Vacuum (High Pressure) Interlocks. On detection of low vacuum (pressure above a predetermined setpoint) at LVP-PSHHI-0139 or LVP-PSHHI-0140, the PPJ system actuates the safety exhauster ASD controls, which results in a command to each of the three exhausters to operate at a preset fixed speed (LVP-YC-0023A for LVP-EXHR-00001A, LVP-YC-0024 for LVP-EXHR-00001B, LVP-YC-0017A for LVP-EXHR-00001C). The third exhauster is auto-started. The ASD ramps this exhauster up to the setpoint speed. In this configuration, a minimum of two exhausters (accounting for one exhauster failure) will be providing motive force to maintain system confinement. To place the melter offgas system into a known configuration that allows the exhausters to maintain confinement indefinitely, the low vacuum signal trips additional interlocks:

- The LVP header low vacuum interlock actuates open the bypass valves in the secondary offgas process system (i.e., LVP-YV-0403 bypass valve for the mercury mitigation skid, LVP-YV-0501 bypass valve for the SCO/SCR skid, and LVP-YV-0097 bypass valve for the caustic scrubber). This establishes a known configuration that is much less susceptible to pressure variations due to dynamic process conditions.
- The LVP header low vacuum interlock actuates closed the vessel vent header PCV LVP-PV-0072. This protects against excessive airflows into the LVP system due to vessel vent line failure upstream of the SS confinement boundary. A bypass line around the valve with an orifice exists, allowing a limited flow from the process vessels. This limited flow is allowed for in the control strategy selection.
- The LVP header low vacuum interlock stops feed to the melters. This function is credited to prevent plugging of offgas system components with ammonium nitrate. Ammonium nitrate can deposit and accumulate in offgas equipment under certain upset conditions. Shutting off feed on reduced LVP header vacuum removes the source of nitrogen oxides necessary for the formation of ammonium nitrate in the offgas system components, before complete blockage of flow can occur. The method of feed termination is by isolation of the air supply line to the melter feed ADS pumps (LFP-YV-1208 and LVP-YV-2208). It is noted that while other melter feed termination interlocks include a subsequent isolation of the water supply to the ADS pumps due to concerns related to cold cap durations, no such issue exists for low LVP header vacuum. The system can run indefinitely in this configuration, and therefore, water isolation to the ADS pumps is not a required function.
- The LVP header low vacuum interlock actuates closed the isolation valve on the ammonia supply to the SCR (LVP-YV-0528). This protects against excessive ammonia flows into the LVP system from the ammonia supply and eliminates vacuum losses due to the ammonia feed into the LVP system.
- The LVP header low vacuum interlock actuates closed the isolation valve on the dilution air supply to the SCR (LVP-YV-0538). This protects against excessive dilution airflows into the LVP system and eliminates vacuum losses due to the dilution air feed into the LVP system.

The LVP header low vacuum interlock trip is alarmed on the PCJ control panel(s).

LVP Header Excessive Vacuum Interlocks. The LVP header excessive vacuum interlocks protect the LAW melters and offgas system components from excessive vacuum conditions that could exceed their design rating. This set of interlocks is tripped using pressure instruments LVP-PI-0139 and LVP-PI-0140.

On detection of excessive vacuum (pressure below a predetermined setpoint), LVP-PSLL-0139/0140, the PPJ system actuates the safety exhauster ASD controls, which results in a command to each of the three exhausters to operate at a preset fixed speed (LVP-YC-0023A for LVP-EXHR-00001A, LVP-YC-0024 for LVP-EXHR-00001B, LVP-YC-0017A for LVP-EXHR-00001C), while establishing a known LOP/LVP system configuration that ensures that melter depression can be maintained, without exceeding the design vacuum rating of the LOP system components. The third exhauster is auto-started. The ASD ramps this exhauster up to the setpoint speed. In this configuration, a minimum of two exhausters (accounting for one exhauster failure) will be providing motive force to maintain system confinement. The reconfiguration of the LOP/LVP offgas system is like the interlocks described above for the low vacuum interlocks, except the melter feed pumps (ADS pumps) are not shut down.

- The LVP header excessive vacuum interlock actuates open the bypass valves in the secondary offgas process system (i.e., LVP-YV-0403 bypass valve for the mercury mitigation skid, LVP-YV-0501 bypass valve for the SCO/SCR skid, and LVP-YV-0097 for the caustic scrubber). This establishes a known configuration that is much less susceptible to pressure variations due to dynamic process conditions.
- The LVP header excessive vacuum interlock actuates closed the vessel vent header PCV (LVP-PV-0072). This protects against excessive airflows into the LVP system due to vessel vent line failure upstream of the SS confinement boundary. A bypass line around the valve with an orifice exists, allowing a limited flow from the process vessels. This limited flow is allowed for in the control strategy selection.
- The LVP header excessive vacuum interlock actuates closed the isolation valve on the ammonia supply to the SCR (LVP-YV-0528). This protects against excessive ammonia flows into the LVP system from the ammonia supply and eliminates vacuum losses due to the ammonia feed into the LVP system.
- The LVP header excessive vacuum interlock actuates closed the isolation valve on the dilution air supply to the SCR (LVP-YV-0538). This protects against excessive dilution airflows into the LVP system and eliminates vacuum losses due to the dilution air feed into the LVP system.

The trip of the LVP header excessive vacuum interlock is alarmed on the PCJ and PPJ system.

Loss of Power Reconfiguration Interlock. The loss of power reconfiguration interlock is initiated outside the melter offgas system. The interlock is described here due to its similarity with the excessive vacuum and high pressure interlocks, and because it also closes vessel vent header valve LVP-PV-0072.

The melter offgas exhausters are supplied by the UPS system so that offgas confinement is maintained if normal power is lost. Upon detection of a loss of normal facility power (loss of 2 out of 3 safety UPS power under voltage relays UPE-YY-2303/2403/2503), the PPJ system actuates the safety exhauster ASD controls (through controllers LVP-YC-0023A, LVP-YC-0017A, LVP-YC-0020A for exhausters LVP-EXHR-00001A/00001B/00001C, respectively), which results in a command to each of the three exhausters to operate at a preset fixed speed to limit exhauster loading on the UPS batteries. A known LOP/LVP system configuration is established that ensures that melter depression can be maintained at the set speed of the exhausters. The third exhauster (standby exhauster) is auto-started. The ASD ramps this exhauster up to the setpoint speed. In this configuration, a minimum of two exhausters (accounting for one exhauster failure) will be providing motive force to maintain system confinement. The separate UPS systems are sized to operate their associated exhauster and other SS loads for a minimum of 2 hours upon a loss of normal facility power. The maximum melter design vacuum cannot be exceeded in the reconfigured state, even with three exhausters operating at their fixed speed setpoint.

To place the melter offgas system into a known configuration that allows the exhausters to maintain confinement for the required period during cold cap burnoff, the loss of power signal trips additional interlocks that perform the following:

- Isolate service air and demineralized water flows to the melter film coolers. Valve LOP-YV-1129 is closed to isolate PSA to the melter 1 film coolers. Valve LOP-YV-2129 isolates PSA to the melter 2 film coolers. Valves LOP-YV-1109/1209 are closed to isolate demineralized water to melter 1 and melter 2 film coolers, respectively.
- Isolate process air flow to the WESP units. Valve LOP-YV-1098 is de-energized closed to isolate LOP-WESP-00001, and valve LOP-YV-2098 is de-energized closed to isolate LOP-WESP-00002
- Terminate feed to both melters. The method of feed termination is by first isolating plant service air to the melter feed ADS pumps, followed by isolation of demineralized water (after line flushes) to the ADS pumps. The method of feed termination is by first isolating plant service air to the melter feed ADS pumps, followed by isolation of demineralized water (after line flushes) to the ADS pumps. First, the air supply line to the melter feed ADS pumps is isolated (valve LFP-YV-1208 is closed to the ADS pumps to melter 1 and valve LFP-YV-2208 is closed to the ADS pumps to melter 2). Then, the water supply to the melter feed ADS pumps is isolated (by closure of valves LFP-YV-1207/2207 for melters 1 and 2, respectively).
- Fully open the melter offgas flow control valves downstream of each WESP (LOP-FV-1140 for LOP-WESP-00001 and LOP-FV-2140 for LOP-WESP-00002).
- Close the vessel vent header PCV (LVP-PV-00072). A bypass line around the valve has an orifice, allowing limited flow from the process vessels.
- Open equipment bypass valves to divert flow around the mercury mitigation skid, catalytic/oxidizer skid, and the caustic scrubber (i.e., LVP-YV-0403 bypass valve for the mercury mitigation skid, LVP-YV-0501 bypass valve for the SCO/SCR skid, and LVP-YV-0097 for the caustic scrubber).

The loss of power interlocks also trips if two of three UPS are in bypass (UPE-HY-2305/2405/2505).

4.1.6.2.2 HEPA Preheater, and HEPA Filter Control Features

The following sections describe the system indications, alarms, and system control features associated with the HEPA preheaters (LVP-HTR-00001A/00003A), and HEPA filters (LVP-HEPA-00001A/00002A/00003A and LVP-HEPA-00001B/00002B), as depicted on P&IDs 24590-LAW-M6-LVP-00001001, 24590-LAW-M6-LVP-00001002, and 24590-LAW-M6-LVP-00001003, *P&ID - LAW - LAW Secondary Offgas/Vessel Vent Process System HEPA Filters*.

The LVP HEPA preheaters raise the offgas temperature sufficiently to ensure the offgas will not condense any water while passing through the HEPA filters. The HEPA filters provide for the retention of fine particles including radioactive material to minimize radioactive contamination throughout the remainder of the LVP system.

4.1.6.2.2.1 System Monitoring

<u>HEPA Preheaters:</u>

Offgas Temperature Upstream of the HEPA Preheaters. The upstream offgas temperature is provided in the control room via LVP-TI-0101. There are no alarms for this temperature.

Offgas Temperature Downstream of the HEPA Preheaters. The downstream offgas temperature is provided in the control room via LVP-TI-0104. There is a high temperature alarm on the PCJ.

Offgas Temperature Differential Across the HEPA Preheaters. The temperature data from LVP-TI-0101 and LVP-TI-0104 is fed into LVP-TDI-0101 in the control room to notify the operator that sufficient heat has been added to the offgas stream to ensure there is no water condensed out of the stream during HEPA filtration. The HEPA filters are not designed to handle water droplets, which blind the media and increase the DP. There is a low differential temperature alarm on the PCJ. Differential temperature as displayed on LVP-TDI-0101 provides input to the temperature differential controllers LVP-TDC-0101A and LVP-TDC-0101B for PCJ control of the power input to the preheaters.

Offgas Pressure. The offgas pressure upstream of the preheaters is provided in the control room via LVP-PI-1070 and LVP-PI-1071.

HEPA Preheater Temperature Controls. The design of the HEPA preheater controls is on hold and cannot be accurately depicted now.

HEPA Filters:

HEPA Filtration System Overall Pressure Drop (inlet pipe to outlet pipe). The pressure drop (in. H_2O) across the HEPA filter system, both Trains A and B, is provided to the control room via LVP-PDI-0083 and LVP-PDI-0084. High and high-high DP is alarmed on the PCJ.

HEPA Filtration System Trains A and B. The HEPA filtration system is made up of two filtration trains (Trains A and B) to allow the offgas system to operate on one train while the HEPA filters are being changed in the other train. Each filter train provides HEPA filters in series for double filtration (primary HEPA filter and secondary HEPA filter) of the offgas stream before entering the remainder of the offgas treatment units.
The process parameters to be monitored will be the same for either train, but the specific instrument numbers to be monitored will depend on which train is in service.

HEPA Filter Train A:

Primary HEPA Filter Differential Pressure. The filter DP (in. H_2O) for the two parallel filters is provided to the control room via LVP-PDI-0011. Both high and high-high DP are alarmed on the PCJ.

Secondary HEPA Filter Differential Pressure. The filter DP (in. H_2O) is provided to the control room via LVP-PDI-0012. Both high and high-high DP are alarmed on the PCJ.

Offgas Flow Rate. The offgas flow rate (scfm) through the train A HEPA filters is provided to the control room via LVP-FI-0115 and LVP-FI-0114. There are no alarms associated with the offgas flow rate.

HEPA Filter Train B:

Primary HEPA Filter Differential Pressure. The filter DP (in. H_2O) is provided to the control room via LVP-PDI-0007. Both high and high-high DP are alarmed on the PCJ.

Secondary HEPA Filter Differential Pressure. The filter DP (in. H_2O) is provided to the control room via LVP-PDI-0008. Both high and high-high DP are alarmed on the PCJ.

Offgas Flow Rate. The offgas flow rate (scfm) through the Train B HEPA filters is provided to the control room via LVP-FI-0113. There are no alarms associated with the offgas flow rate.

Header Pressure Downstream of the HEPA Filter System. The pressure (in. H_2O) is provided to the control room via LVP-PI-0015. There are no alarms associated with the offgas pressure.

HEPA Filter Radiation Dose Rate. There is no installed instrumentation to allow monitoring of the radiation dose rate buildup on the HEPA filters during operation as particulate matter removed from the offgas stream accumulates on the HEPA filters. This information is important to the operator to know when the offgas stream must be transferred to the standby HEPA filter train to prepare for HEPA filter removal and replacement. Because the design requires hands-on contact HEPA filter, bag-out, removal, and replacement, the operating maximum radiation dose rate must be set based on the personnel ALARA limits considering filter change out frequency and maximum radiation exposure during filter change out.

The necessary HEPA filter radiation dose rate information will be determined by and tracked by routine radiation data taken by radiation protection personnel.

4.1.6.2.2.2 Control Capability and Locations

Instrument Air Rotameters for Instrument Line Purging. The instrument sensing lines to each of the two HEPA overall DP transmitters (LVP-PDT-0083 and LVP-PDT-0084) (both SS) are continuously purged with about 1.5 SCFH of instrument air to minimize contamination migrating to the instruments. The purge also minimizes the possibility of line plugging from a buildup of solids from the process air. The small airflow meters (commonly referred to as purgerators), LVP-FI-0168, LVP-FI-0169, LVP-FI-0170 and LVP-FI-0171, are mounted on the instrument racks near the DP transmitters. The flow instruments are SS.

HEPA Filter Differential Pressure Indicators. The design provides local HEPA filter DP instrumentation that is mounted near each HEPA filter assembly, LVP-DPI-129, LVP-DPI-130, LVP-DPI-131, and LVP-DPI-132.

4.1.6.2.2.3 Automatic and Manual Actions

The following instruments and controls are in the control room unless otherwise noted. Operator general response actions in responding to alarms are listed; however, specific actions will be communicated in alarm response operating procedures to be developed later.

High-High HEPA Filter DP Automatic Valve Action. When the DP across any of the four primary or secondary HEPA filter assemblies reaches the high-high setpoint value (actuating LVP-PDSHH-0007, LVP-PDSHH-0008, LVP-PDSHH-0011, or LVP-PDSHH-0012), the isolation valves on the other train will automatically open and there will be indication that there is a high-high DP across the initiating HEPA filter. At the same time, feed will be stopped to both melters.

While this HEPA filter automatic action may seem to be an interlock, it does not meet the requirements because it does not result in override action. This HEPA filter automatic action functions by using the “Auto Open” feature of valve control; that is, when the valve position controller is in “Auto,” then the valve will open. If the valve position controller is in “Manual,” then the valve will not open. Interlocks provide override action, which changes the valve position regardless of the valve controller mode of “Auto” or” Manual.”

HEPA Filter Train an Isolation for Maintenance. The train A HEPA filters can be manually isolated for maintenance by closing manual valves LVP-V-01649 and LVP-V-01651.

HEPA Filter Train B Isolation for Maintenance. There are no 18 in. manual valves in the design to allow train B HEPA filters to be manually isolated for maintenance. Actuated valves LVP-YV-0105/0106 can be used to

isolate the HEPA filters for maintenance, but should be locked closed to prevent them from spuriously opening during HEPA changeout from a loss of power to the solenoid or a loss of air pressure to the actuator.

4.1.6.2.2.4 Setpoints and Ranges

The safety related setpoints and ranges are documented in the TSRs. (**TBD**)

The setpoints and ranges associated with PCJ indications that have an engineering basis are provided in 24590-LAW-JDX-LVP-00001.

The setpoints and ranges associated with the PCJ indications that are configurable by the operator are provided in the (**TBD**) *LAW Facility LOP/LVP System Tunable Report*.

4.1.6.2.2.5 Interlocks, Bypasses, and Permissives

The following sections describe the important system interlocks, bypasses, and permissives associated with the HEPA preheater system, and the HEPA filter system. In general, there are PCJ alarms (high or low) that warn the operator of a parameter value that is exceeding the normal operating limits. There may also be PCJ interlocks that trip at the same time as the PCJ alarm to protect against equipment damage. The safety interlocks initiated by the PPJ system always override the PCJ controls. The PPJ alarms and interlocks are always set outside the PCJ alarm values (high-high and low-low) rather than the PCJ alarm and interlock settings of high and low). The PPJ alarms not only notify the operator that the control parameter is out of limits, it also provides indication that the particular PPJ interlock has tripped the system to the safety design position. Permissives provide protection against manual or control actions until the system in question is in the correct configuration for the impending change in configuration such as sufficient solution level in a tank before pump start. Refer to the detailed design documentation for additional detail.

HEPA Preheater Interlocks. The design of the HEPA preheater controls and interlocks are on hold and cannot be accurately depicted now.

HEPA Filtration System Overall Pressure Drop (inlet pipe to outlet pipe) High Differential Pressure Interlocks (Safety Significant). The HEPA filter system DP interlocks actuate high DP across the HEPA filter system from the inlet pipe to the outlet pipe (as displayed on LVP-PDI-0083 and LVP-PDI-0084) will cause the feed to the operating melter to be terminated (LFP/LCP systems). The method of feed termination is by isolating air and water to the melter feed ADS pumps. A timed delay in water isolation is allowed for flushing activities, with related analytical limits and setpoints accounting for this time delay. A high-high interlock trip alarm is displayed on both the PCJ and PPJ.

HEPA Filter Train Isolation Valve Interlock (Safety Significant). The four filter train isolation valves (LVP-YV-0105, LVP-YV-0106, LVP-YV-0107, and LVP-YV-0108) positions (open or closed) are monitored by the PPJ system via the valve position switches and interlock action is triggered when either of the two isolation valves start to close on the train in service. The interlock action will open all four isolation valves to ensure a flowpath through the HEPA filters.

HEPA Filter Train Isolation Valve Permissives (Safety Significant). Before either HEPA filter train A or B can be isolated for maintenance, both isolation valves on the other train must be open. To close the A Train isolation valves (LVP-YV-0107 and LVP-YV-0108), the permissive requires that the B Train isolation valves (LVP-YV-0105 and LVP-YV-0106) must be in the open position as monitored by the PPJ.

4.1.6.2.3 Mercury Mitigation Equipment Control Features

The following sections describe the system indications, alarms, and system control features associated with the mercury mitigation equipment skid. This skid includes the activated carbon bed adsorbers (LVP-ADBR-00001A/B) and associated piping and valves. Refer to the design documentation for additional detail.

4.1.6.2.3.1 System Monitoring

The following subsections describe important instrumentation that is used for treatment unit operation and performance monitoring.

Skid Inlet Pressure. Skid inlet pressure (psig), measured at LVP-PI-0025, is provided on the PCJ to inform the operator of the vacuum level at the intake to the mercury mitigated skid. High pressure is alarmed on the PCJ if proper vacuum is lost at that location.

Skid Inlet Temperature (SS). Redundant temperature-out readings (on hold) from the upstream HEPA preheater are used to track the temperature of the incoming gas to the carbon beds. High temperature could cause overheating of the carbon beds. If HEPA preheater outlet temperature is above a setpoint limit, high-high temperature is alarmed on the PCJ (LVP-TAHH-0136B, LVP-TAHH-0137B). The high-high temperature switches (LVP-TSHH-0136B/0137B) activate the high mercury mitigation skid high inlet temperature interlock described in Section 4.1.6.2.3.5.

Note: There is an inconsistency between the HEPA preheater and mercury abatement skid P&IDs. The temperature instruments on the upstream HEPA preheater P&ID are currently (as of June 1, 2016,) shown on hold. The corresponding high temperature alarms and interlock signal on the mercury mitigation skid P&ID (24590-LAW-M6-LVP-00004002) are approved. Functionally, the intent is to monitor the temperature of the offgas stream either at the outlet of the HEPA preheaters or the inlet of the mercury abatement skid, to alarm on detection of high-high temperature, and to actuate the mercury abatement skid high inlet temperature interlock if high-high temperature is detected.

Skid Differential Pressure (SS). The DP is monitored across the mercury mitigation skid via LVP-PDT-0401 and LVP-PDT-0402. The DP is monitored to detect increased flow resistance across the skid, which could impede offgas flow and compromise melter vacuum. Skid DP indication (in. H_2O) is provided on the PCJ (LVP-PDI-0401/0402). High DP and high-high DP are alarmed on the PCJ.

Skid Differential Carbon Oxides (SS). Carbon oxide concentration monitors are provided on the inlet and outlet sides of the mercury mitigation skid to monitor for potential increase in carbon oxide concentration. An outlet concentration of carbon oxides higher than the inlet concentration indicates oxidation of carbon is occurring in the adsorber units. Dual carbon oxide monitors are provided on the skid inlet and outlet to provide redundancy and to increase reliability (LVP-AE-0405 and LVP-AE-0406 on inlet and LVP-AE-0424/0425 on the outlet).

Inlet and outlet carbon monoxide and dioxide concentration indications (ppmv) are provided on the PCJ. Inlet CO (LVP-AI-0405A/0406A) and Inlet CO2 (LVP-AI-0405B/0406B), Outlet CO (LVP-AI-0424A/0425A) and Outlet CO2 (LVP-AI-0424B/0425B). High differential carbon oxides across the skid is alarmed on the PCJ (LVP-ADI-0405A/-0405B). High-high differential COx across the skid is alarmed (LVP-ADAHH-0405A/-0405B).

Primary/Guard Bed Combined Differential Pressure. Pressure differential (in. H_2O) is measured across the combined primary and guard beds in each adsorber units via LVP-PDT-0408 and LVP-PDT-0416, respectively. Used to trend for increasing pressure drop potentially caused by material deposition, moisture accumulation,

ammonium nitrate buildup, or attrition of media. The DP is indicated on the PCJ (LVP-PDI-0408 for LVP-ADBR-00001A, LVP-PDI-0416 for LVP-ADBR-00001B). High DP is alarmed on the PCJ.

Primary and Guard Bed Temperatures. Two temperature instruments are provided in the primary bed and two in the guard bed in each adsorber unit used to monitor media temperature (°F). Primary bed (LVP-TI-0410/0411) and guard bed (LVP-TI-0412/0413) temperatures are displayed on the PCJ for LVP-ADBR-00001A., LVP-TI-0412/TI-0413 in Primary bed (LVP-TI-0418/0419) and guard bed (LVP-TI-0420/0421) for LVP-ADBR-00001B. Adsorption reactions can elevate media temperature, and these temperature readings can be useful to identify where higher reaction heat is occurring. High temperature alarms are provided on the PCJ. These temperature instruments can also be used to monitor for residual reactions after an adsorber unit has been isolated by the high differential carbon oxide interlock (discussed in Section 4.1.6.2.2.5). If persistent high temperature is a problem after isolating the beds, the temperature monitors aid in the decision about whether to add cooling water to the beds via the manual water connection on the adsorber unit.

Liquid Level Detection. Ultrasonic/radar level instruments are provided in each adsorber vessel (LVP-LT-0414 for LVP-ADBR-00001A, LVP-LT-0422 for LVP-ADBR-00001B). Their primary function is to allow detection of liquid level if water is ever added to extinguish residual reactions in the bed after the adsorber vessels have been isolated due to a suspected carbon bed fire (refer to the high differential carbon oxides interlock in Section 4.1.6.2.2.5). Level indication (inches) and high level alarm are provided on the PCJ (LVP-LI-0414 and LVP-LI-0422).

Discharge Filter Differential Pressure. Pressure differential (in. H_2O) is measured across the discharge filter in each adsorber unit (LVP-PDT-0437 and LVP-PDT-0438). Used to determine when the filters are becoming plugged and need changeout. The DP is indicated on the PCJ (LVP-PDI-0437, LVP-PDI-0438). High DP alarms are on the PCJ.

Hydrogen Fluoride and Hydrogen Chloride Analyzers. Chemical analyzer LVP-AE-0439 is provided on the outlet header from the skid to monitor both hydrogen fluoride and hydrogen chloride concentration, used to verify the adsorber units are adequately performing their permit treatment function. The sample is taken and returned through sample probe LVP-AW-0439. Elevated hydrogen fluoride or hydrogen chloride readings can be used to detect breakthrough and the need for changeout of the guard bed media. Hydrogen fluoride and hydrogen chloride concentration (ppmv) are indicated on the PCJ (LVP-AI-0439A and LVP-AI-0439B, respectively). High HCl and high HF concentration are each alarmed.

Skid Outlet Temperature. Outlet temperature is monitored on the skid outlet pipe. This temperature is used to trend for and detect elevated temperature from adsorption reactions inside the adsorber units. Temperature indication (°F) is provided on the PCJ (LVP-TI-0426). High temperature is alarmed on the PCJ.

Outlet Mercury Concentration. Chemical analyzer LVP-AE-0423 is connected by piping to the outlet plenum of each adsorber units. Either adsorber unit can be selected for sampling, using three-way valve LVP-YV-0423. Analyzer LVP-AI-0423 provides mercury concentration indication (µg/dscm) on the PCJ to monitor penetration of mercury through the beds. High hourly average mercury concentration is alarmed on the PCJ. This information will be used to determine when carbon media needs changeout.

4.1.6.2.3.2 Control Capability and Locations

The following components are manually operated during normal operations and are operated locally (at the panel/component).

- Butterfly valves (LVP-V-01538, LVP-V-01539) – These valves are manually controlled at the adsorber units and are used for swapping the lead and lag position of the adsorber units. Swapping the position of these valves is coordinated with the positioning of the actuated inlet and manual outlet valves (valves LVP-YV-0407/0415 and LVP-V-01540/01537) to ensure the proper flowpath through the units.

- Manual butterfly valves LVP-V-01648 – This valve can be used to isolate the mercury mitigation skid from the offgas stream for maintenance. The valves would be used in conjunction with valves LVP-V-01540/01537 to provide double isolation of the adsorber units. Valve LVP-V-01648 is required to be locked open except during planned maintenance, as closing these valves would block the discharge path from the adsorber vessel pressure relief rupture disks (LVP-PSE-0447/0448).

- Purge Airflow to DP Taps. The sensing lines for the SS pressure differential transmitters measuring DP across the skid (i.e., LVP-PDT-0401 and LVP-PDT-0402) are purged with a small flow rate of instrument air to keep the sensing lines clear (e.g., prevent contamination and chemical vapor migration up the sensing lines, and prevent potential plugging from ammonium nitrate salt formation). Local flow indicators LVP-FI-0432 and LVP-FI-0433 and LVP-FI-0451 and LVP-FI-0452 are used to set the purge airflow rate (scfh) at each leg at the start of operations.

4.1.6.2.3.3 Automatic and Manual Actions

The following subsections describe the conditions under which important features are activated and whether these features are activated automatically or manually. For additional details, refer to the operating procedures that govern the operator response to alarms.

Skid Inlet, Outlet and Bypass Valves. The skid inlet valves (LVP-YV-0407, LVP-YV-0415, LVP-YV-0449) and skid bypass valve (LVP-YV-0403) are dual-control valves—meaning they can be closed or opened by the PCJ or by the PPJ system. The valves are normally controlled manually and remotely using the PCJ. The valves can be separately lined up, as desired, to isolate the adsorber units for maintenance or to swap lead and lag position for the two adsorber units. The PCJ permissive interlocks prevent the valves from being opened or closed in a sequence that could inadvertently block offgas flow (refer to Section 4.1.6.2.2.5). Outlet valves (LVP-V-01540, LVP-V-01537) are normally closed and locked open manual butterfly valves, respectively.

Various safety interlocks within the PPJ system are overriding. Under certain accident conditions, the PPJ system will automatically vent these valves to their fail-safe position. The PPJ controls are designed to ensure the bypass valve is open before the inlet or outlet valves are closed, to maintain the required open offgas path through the stack. The PPJ safety interlocks are described further in Section 4.1.6.2.3.5.

Bypass Valve Not Closed/Melter Feed Shutdown. If the position switch on the bypass valve (LVP-YV-0403 detects that the valve is not closed, feed to both melters is shut down through the melter 1 and melter 2 ADS pump managers (normal shutdown sequence). This limits emissions through the stack when the carbon beds are bypassed. This control is implemented automatically within the PCJ.

Mercury Analyzer. The mercury analyzer (LVP-AE-0423) is attached by piping and tubing to the outlet plenum of each adsorber vessel. A booster pump is used to draw the sample through the analyzer and return the sample to the one of the adsorber vessel outlet plenums. Three-way valve LVP-YV-0423 is used to line up the desired adsorber unit to the mercury analyzer. The sampler unit and three-way valve are controlled from local panel LVP-PNL-00011. The position of the three-way valve is selected by handswitch at the panel. The valve is solenoid operated. Aligning the analyzer to the desired adsorber vessel is a manual local operation. The analyzer function and output to the control room is automatic.

Water Addition. A fire hose fitting and pipe are connected to both adsorber vessels. A water source can be manually connected and used to add water to the beds, if deemed necessary, to extinguish residual oxidation reactions in the beds after the inlet and outlet valves have been closed by interlock to smother a fire. An orifice on this line limits the addition rate of water to the beds, so the volumetric displacement of gases from the carbon beds through the pressure relief path can be accommodated without over pressurizing the vessels. Liquid level can be monitored via LVP-LI-0414, LVP-LI-0422 during water addition. A high-level alarm will result in operator action to shut off the water supply to prevent overfilling the vessels and flooding into the offgas system through the pressure relief path.

4.1.6.2.3.4 Setpoints and Ranges

The setpoints and ranges for the SS interlocks described in Section 4.1.6.2.3.5 (Mercury Mitigation Skid High DP Interlock, High Inlet Temperature Interlock, and High Differential Carbon Oxide Interlock) are provided in the LAW DSA.

The setpoints and ranges associated with PCJ and PPJ indications that have an engineering basis are provided in 24590-LAW-JDX-LVP-00001.

The setpoints and ranges associated with the PCJ indications that are configurable by the operator are provided in the (**TBD**) *LAW Facility LOP/LVP System Tunable Report*.

4.1.6.2.3.5 Interlocks, Bypasses, and Permissives

The following sections describe the important system interlocks, bypasses, and permissives germane to the mercury abatement skid. Refer to the detailed design documentation for additional detail.

Mercury Mitigation Skid High Differential Pressure Interlock (SS). Blocked or plugged skid equipment could result in loss of vacuum in the melters and a release of contaminated offgas outside the melter and offgas confinement system. On detection of high DP, as measured by LVP-PDT-0401 or LVP-PDT-0402, this interlock opens the bypass valve LVP-YV-0403, which redirects flow around the skid. This is an SS interlock implemented in the PPJ system. Two PDT instruments are provided to provide redundancy and to maximize the reliability of the high DP interlock function. The PPJ system also sends an override signal to the PCJ to vent the skid bypass valve (LVP-YV-0403) open. This ensures the PCJ valve controls mimic the PPJ system to avoid conflicts Interlock actuation is indicated by alarm on the PCJ and within the PPJ.

Mercury Mitigation Skid High Inlet Temperature Interlock (SS). Temperature instruments are provided downstream from the HEPA preheaters to detect hot offgas flow that may be capable of initiating a carbon bed fire. If the temperature of the offgas exiting the HEPA preheaters exceeds a setpoint limit, a high-high temperature switch (LVP-TSHH-0136B/-0137B) trips interlocks that open the mercury mitigation skid bypass valve (LVP-YV-0403) and close the inlet valves to each carbon bed adsorber (LVP-YV-0407 and LVP-YV-0415). This is an SS interlock implemented via the PPJ system. The interlock trip is alarmed on the PCJ and the PPJ system. The PPJ system sends override signals through the PCJ that mimic the PPJ valve interlocks, to avoid conflicts between the PPJ system and PCJ.

Mercury Mitigation Skid High Differential Carbon Oxide Interlock (SS). Carbon oxide concentration monitors are provided on either side of the skid to detect an increase in carbon monoxide or dioxide concentration in the offgas stream, indicative of a carbon bed fire. Dual carbon oxide monitors are provided on the skid inlet and outlet to provide redundancy and to increase reliability (LVP-AE-0405 and LVP-AE-0406 on inlet and LVP-AE-0424/0425 on the outlet).

Upon detection of high differential carbon monoxide or carbon dioxide concentration across the skid, the interlock:

- Opens the mercury mitigation skid bypass valve (LVP-YV-0403).
- Closes the offgas inlet valves (LVP-YV-0407, LVP-YV-0415, LVP-YV-0449) of both carbon bed adsorbers.
- Terminates feed to the operating melter(s) (LFP system). The method of feed termination is by first isolating plant service air to the melter feed ADS pumps, followed by isolation of demineralized water (after line flushes) to the ADS pumps. First, the air supply line to the melter feed ADS pumps is isolated (valve LFP-YV-1208 is closed to the ADS pumps to melter 1 and valve LFP-YV-2208 is closed to the ADS pumps to melter 2). Then, the water supply to the melter feed ADS pumps is isolated (by closure of valves LFP-YV-1207/2207 for melters 1 and 2, respectively).

This is a SS interlock implemented in the PPJ system. Interlock activation is alarmed on the PCJ and the PPJ system. Parallel signals are sent through the PCJ to override open the skid bypass valve (LVP-YV-04030), and to override close the skid inlet valves (LVP-YV-0407/0415/0449). This ensures the PCJ valve controls mimic the PPJ interlocks, to avoid PPJ/PCJ conflicts.

Other LVP Interlocks that Open the Mercury Mitigation Skid Bypass. The LVP header excessive vacuum, LVP header high pressure LVP-PSHH-0139Z interlock, and the loss of power reconfiguration interlock also open the skid bypass valve YV-0403 to redirect flow around the skid. These interlocks are described further in Section 4.1.6.2.1.5.

Valve Permissives. The inlet valves (LVP-YV-0407, LVP-YV-0415, LVP-YV-0449) on each adsorber unit are controlled, along with the bypass valve (LVP-YV-0403), with appropriate permissives to ensure the offgas path cannot be blocked. The inlet and outlet valves must be open before the mitigation skid bypass valve can be closed. Similarly, the bypass valve must be open before the valves for isolating the adsorber units can be closed (close permissives). These permissives are implemented in the PCJ.

4.1.6.2.4 Thermal Catalytic Oxidizer/Reducer Equipment Control Features

The following sections describe the system indications, alarms, and system control features associated with the TCO and thermal catalytic reducer skid. This skid includes heat exchanger LVP-HX-00001, electric heater LVP-HTR-00002, selective catalytic oxidizer LVP-SCO-00001, selective catalytic reducer LVP-SCR-00001, and associated piping and valves. Refer to the design documentation for additional details.

4.1.6.2.4.1 System Monitoring

The following sections describe the system indications, alarms, and system control features that are used for operation and performance monitoring. Refer to the detailed design documentation for additional detail.

Control room monitoring for the TCO Skid includes the following:

- The DP across the skid indicated by LVP-PDI-0502 and LVP-PDI-0504 with high differential pressure alarms. There are also separate high-high pressure alarms LVP-PDAHH-0502 and LVP-PDAHH-0504. The DP instruments are used to monitor for plugging in the skid catalyst beds. These are SS instruments, discussed further in interlock Section 4.1.6.2.2.5.
- Position of the skid bypass valve (open/closed) indicated by LVP-YV-0501 (LVP-ZI-0501) used to indicate whether the skid is bypassed. Valve LVP-YV-0501 is opened and closed using switch LVP-HS-0501A or by interlocks discussed in Section 4.1.6.2.4.5.

- Offgas flow (scfm) into the skid heat exchanger LVP-HX-00001 indicated by LVP-FI-0506 used to trend the flow profile to the TCO skid.
- Skid heat exchanger LVP-HX-00001 inlet offgas temperature indicated by LVP-TI-0507 with high temperature alarm.
- Offgas temperature upstream from the electric heater HTR-00002 inlet indicated by LVP-TI-0508 with high temperature alarm.
- Electrical power (on or off) to the electric heater HTR-00002 indicated by Power ISO Contactor LVP-YL-0510.
- Electric heater temperature controller LVP-TC-0511 used to control the power to the electric heater LVP-HTR-00002 based on the heater outlet gas temperature measured by LVP-TI-0511.
- Electric heater LVP-HTR-00002 outlet offgas temperature indicated by LVP-TI-0509 and LVP-TI-0516 with high temperature alarms that would indicate offgas temperature above the SCO operating range. The LVP-TI-0509 and LVP-TI-0516 are SS instruments connected to the PPJ system. There are also separate high-high temperature interlock trip alarms LVP-TAHH-0509 and LVP-TAHH-0516.
- Electric heater LVP-HTR-00002 outlet offgas temperature (°F) is indicated by LVP-TI-0511, which supplies input to electric heater temperature controller LVP-TC-0511.
- The DP (in H_2O) across the SCO indicated by LVP-PDI-0512 with a high DP alarm, which would indicate plugging in the SCO catalyst bed.
- The SCO outlet temperature (°F) indicated by LVP-TI-0513 with a high alarm.
- The SCR inlet temperature (°F) indicated by LVP-TI-0517 with high and low alarms, used to monitor whether the SCR is operating in the desired temperature range.
- The DP (in H_2O) across the SCR indicated by LVP-PDI-0518 with high DP alarm, which would indicate plugging in the SCR catalyst bed.
- The SCR outlet temperature (°F) indicated by LVP-TI-0519 with high and high-high alarms that would indicate excessive temperature in the SCR possibly reducing NO_x removal efficiency.
- The DP (in H_2O) across the heat exchanger HX-00001 indicated by LVP-PDI-0520 with high DP alarm, which would indicate plugging in the heat exchanger.
- Ammonia concentration (ppmv) downstream from the TCO skid indicated by LVP-AI-0522 and LVP-AI-0523 with the highest value from the two indicators displayed on LVP-AI-0522A. The value from LVP-AI-0522A is used as the input to the ammonia flow controller LVP-AC-0523 on the ammonia dilution skid.
- The TCO skid outlet temperature (°F) indicated by LVP-TI-0524 with high and low alarms.
- The TCO skid outlet temperature (°F) indicated by LVP-TI-0552 and LVP-TI-0554 with both high and low alarms. There are also separate high-high temperature interlock trip alarms LVP-TAHH-0552 and LVP-TAHH-0554 and low-low temperature interlock trip alarms LVP-TALL-0552 and LVP-TALL-0554. These are SS instruments connected to the PPJ system and will be discussed further in Section 4.1.6.2.4.5.

4.1.6.2.4.2 Manual Control Capability and Locations

The following components are manual operated during normal operations and can be operated locally (at the panel/component). Instrumentation root valves and test port valves are not included. All the valves discussed below are located on the TCO skid in room L-0304F.

- Local manual valve LVP-V-01490, located on the inlet line to the TCO skid, is used to isolate the upstream offgas from the TCO skid during maintenance work on the skid. The skid bypass valve will generally be opened before this valve is closed.

- Local manual valve LVP-V-01491, located on the outlet line of the TCO skid, is used to isolate the downstream offgas from the TCO skid during maintenance work on the skid. The skid bypass valve will generally be opened before this valve is closed.

4.1.6.2.4.3 Automatic and Manual Actions

The following subsections describe the conditions under which important features are activated and whether these features are activated automatically or manually. For additional details, refer to the operating procedures that govern the operator response to alarms.

Skid Bypass Valve. The skid bypass valve (LVP-YV-0501) is a dual-control valve-meaning it can be closed or opened by the PCJ (LVP-HS-0501) or by PPJ interlocks. The valve is normally controlled remotely using the PCJ. The valve can be manually opened to allow the offgas stream to bypass the skid.

Under certain accident conditions, the PPJ system will automatically open the valve to the fail-safe position, overriding PCJ manual control. The PPJ safety interlocks are described further in Section 4.1.6.2.4.5.

Electric Heater. The electric heater unit is automatically controlled using a power controller (LVP-JC-0510) on the first bank and an on/off step controller for the remaining banks. Heater controls are in control panel LVP-PNL-00003. The operator inputs the desired temperature setpoint into controller LVP-TC-0511, which receives a signal from temperature element LVP-TE-0511 (located downstream of the heater on the inlet of the SCO) via temperature transmitter LVP-TT-0511. The operator then sends a signal to LVP-JC-0510 to increase or decrease the power to the heaters depending on whether the measured temperature is higher or lower than the setpoint. The signal corresponds directly to the desired output of the heater, from zero output up to the full capacity of the heater (i.e., 4 mA = 0 kW, 12 mA = 155 kW, 20 mA = 310 kW). The power controller allows for full temperature control across the capacity of the first bank. If the heating requirements exceed the capacity of the first bank, the step control activates one of the subsequent banks and reduces power to the first bank. If the heating requirements exceed the capacity of the first bank in combination with one subsequent bank, another bank is then activated. This cycle may continue until all banks are fully activated.

4.1.6.2.4.4 Setpoints and Ranges

The setpoints and ranges for the SS interlocks described in Section 4.1.6.2.4.5 are provided in the LAW DSA.

The setpoints and ranges associated with PCJ and PPJ indications that have an engineering basis are provided in 24590-LAW-JDX-LVP-00001.

The setpoints and ranges associated with the PCJ indications that are configurable by the operator are provided in the (**TBD**) *LAW Facility LOP/LVP System Tunable Report*.

4.1.6.2.4.5 Interlocks, Bypasses, and Permissives

The following sections describe the important system interlocks, bypasses, and permissives germane to the ammonia dilution skid. Refer to the detailed design documentation for additional detail.

The following conditions will cause the TCO skid electric heater HTR-00002 to shut off:

- LVP-TSHH-0552/0554 (TCO skid outlet temperature)
- LVP-TSHH-0511 (HTR-00002 outlet temperature)
- LVP-TSHH-0519 (SCR outlet temperature)

- LVP-YV-0097 not closed (caustic scrubber bypass valve)
- LVP-TSHH-0236 (caustic scrubber outlet temperature)
- LVP-TSHH-0517 (SCR inlet temperature)

The TCO skid bypass valve (LVP-YV-0501) (SS) is controlled with appropriate permissives to ensure the offgas path cannot be blocked. The following conditions will cause the bypass valve to override open:

- LVP-TSLL-0519 (SCR outlet temperature)
- LVP-TSHH-0236/0237 (caustic scrubber outlet temp.)
- Power loss reconfiguration interlock
- LVP-PSLL-0139/0140 (low-low header vacuum reconfiguration interlock)
- LVP-PSHH-0139/0140 (excessive header vacuum reconfiguration interlock)
- LVP-YV-0097 not closed (caustic scrubber bypass valve)
- LVP-TSHH-0517 (SCR inlet temp.)
- LVP-PDSHH-0502/0504 (TCO skid DP)

A high-high SCR inlet temperature on LVP-TT-0517 will cause the following conditions:

- Turn off LVP-HTR-00002 (TCO electric heater)
- Override open LVP-YV-0501 (TCO skid bypass)
- Override close LVP-YV-0560 (ammonia supply valve)

A high-high SCR outlet temperature on LVP-TT-0519 will cause the following conditions:

- Turn off LVP-HTR-00002 (TCO electric heater)
- Override open LVP-YV-0501 (TCO skid bypass)
- Override close LVP-YV-0560 (ammonia supply valve)

A high-high TCO skid DP on PDT-0502/0504 will cause the following condition:

- Opens LVP-YV-0501 (TCO skid bypass valve)

A high-high electric heater outlet temperature on LVP-TT-0509/0516 will cause the following condition:

- Turns off electric heater LVP-HTR-00002

A high-high TCO skid outlet temperature on LVP-TT-0552/0554 will cause the following conditions:

- Override closes LVP-YV-0560 (ammonia supply valve)
- Closes LVP-YV-0528 (ammonia supply valve)
- Turns off electric heater LVP-HTR-00002

A low-low TCO skid outlet temperature on LVP-TT-0552/0554 (SS) will cause the following conditions:

- Override closes LVP-YV-0560 (ammonia supply valve)
- Closes SS LVP-YV-0528 (ammonia supply valve)

4.1.6.2.5 Ammonia Dilution Skid Control Features

The following sections describe the system indications, alarms, and system control features associated with the ammonia dilution skid (LVP-SKID-00003). This skid includes the ammonia supply line with associated piping, valves, and instrumentation. It also includes a dilution air line with HEPA filters LVP-HEPA-00004A/00004B, dilution air fans LVP-FAN-00001/00002, and the associated piping, valves, and instrumentation. Refer to the design documentation for additional details.

4.1.6.2.5.1 System Monitoring

The following sections describe the system indications, alarms, and system control features used for operation and performance monitoring. Refer to the detailed design documentation for additional detail.

Control room monitoring for the ammonia dilution skid includes the following:

- The positions (open/closed) of the ammonia supply valves are indicated by LVP-ZI-0560 and LVP-ZI-0528. The valves are installed in series with LVP-YV-0528 being a SS valve. Valve LVP-YV-0560 is opened and closed using switch LVP-HS-0560. The position of valve LVP-YV-0528 is controlled by interlocks in the PPJ system, which are discussed in Section 4.1.6.2.5.5.
- The pressure (in H_2O) in the ammonia line downstream from the PCV relative to room pressure is indicated by LVP-PI-0564.
- The ammonia/air ratio in the ammonia injected into the SCR is indicated by LVP-AI-0530 (0-100%) with high alarm LVP-AAH-0530. The LVP-AI-0530 indicates to the operator how much of the ammonia is being diluted. This allows the operators to track how far the ammonia concentration is below the flammability limit. The ammonia/air ratio is calculated by taking the highest reading from the two SS ammonia flow meters (LVP-FI-0530 and LVP-FI-0531), dividing it by the lowest reading from two SS dilution airflow meters (LVP-FI-0540 and LVP-FI-0541), and multiplying that by 100.
- Ammonia flow (scfm) to the TCO skid upstream of the SCR is indicated by flow indicator LVP-FI-0529, with high, high-high, low, and low-low alarms.
- Ammonia flow (scfm) to the TCO skid upstream of the SCR is also indicated by safety flow indicators LVP-FI-0530 and LVP-FI-0531. Flow indicators LVP-FI-0530 and LVP-FI-0531 are SS with high flow alarms in the PCJ and separate high-high flow interlock trip alarms LVP-FAHH-0530 and LVP-FAHH-0531.
- Ammonia concentration (ppmv) downstream from the TCO skid indicated by LVP-AI-0522A, which provides an input signal to valve controller LVP-AC-0523, which in turn controls the position of ammonia control valve LVP-AV-0523.
- The DP across the HEPA filters (in. H_2O) in the parallel air dilution lines is provided by LVP-PDI-0546 and LVP-PDI-0549 with high DP alarms.
- Switches LVP-HS-0547 and LVP-HS-0550 are used to open and close the dilution air supply dampers upstream from dilution air fans LVP-FAN-00001 and LVP-FAN-00002, respectively. The positions of the dampers (open/closed) are indicated by LVP-YV-0547 (LVP-ZI-0547) and LVP-YV-0550 (LVP-ZI-0550), respectively.
- Switch LVP-HS-0558 controls the duty/standby status of dilution air fans. Switches LVP-HS-0558A and LVP-HS-0558B are used to start and stop the fans and switch them between auto and manual.

- The DP (in. H_2O) across dilution air fans LVP-FAN-00001 and LVP-FAN-00002 is provided by LVP-PDI-0532 and LVP-PDI-0543, respectively. The DP indicators have low and low-low alarms.
- The speed (%) of dilution air fans LVP-FAN-00001 and LVP-FAN-00002 is controlled and indicated by manual controllers LVP-HC-0558A and LVP-HC-0588B.
- Air pressure (psig) to the seals on the ammonia dilution air fans is indicated by LVP-PI-0553. Pressure indicator LVP-PI-0553 has both high and low alarms.
- The position (open/closed) of the dilution air supply valve LVP-YV-0538 (SS) is indicated by LVP-ZI-0538. The position of valve LVP-YV-0538 is controlled by interlocks in the PPJ system, which are discussed in Section 4.1.6.2.5.5**.**
- Ammonia dilution airflow (scfm) is indicated by LVP-FI-0539 with low and low-low alarms.
- Ammonia dilution airflow (scfm) is also shown on LVP-FI-0540, and LVP-FI-0541 with low and low-low flow alarms. There separate low-low flow interlock trip alarms LVP-FALL-0540/0541. Flow indicators LVP-FI-0540 and LVP-FI-0541 are SS instruments.

4.1.6.2.5.2 Manual Control Capability and Locations

The following components are manually operated during normal operations and can be operated locally (at the panel/component). Instrumentation root valves and test port valves are not included. All valves discussed below are located on the ammonia dilution skid in room L-0304F.

- Local manual valve LVP-AMR-V-1153 is used to isolate the ammonia storage tanks from the ammonia dilution skid.
- Local manual valve LVP-V-01570 is used to depressurize the ammonia supply line after it has been isolated for maintenance.
- Local manual PCV LVP-PCV-0527 located downstream from ammonia supply valves LVP-YV-0560 and LVP-YV-0528 is used to control the pressure of the ammonia in the downstream ammonia line. The pressure will be set at initial plant startup and then periodically checked by instrument technicians to ensure it is within the proper range.
- Local manual valve LVP-V-01557, located on the ammonia line upstream from where the ammonia and dilution air line join, is used to isolate the ammonia line from the dilution air line.
- Local manual valve LVP-V-011554, located on the dilution air skid downstream from where the ammonia and dilution air line join, is used to isolate the dilution air skid from the TCO skid.
- Local manual dampers LVP-V-40066 and LVP-V-40067, located on the ammonia dilution skid, are used to isolate the C3 duct air supply line from filters LVP-HEPA-0004A and LVP-HEPA-0004A during change out of the HEPA filters.
- Local manual dampers LVP-V-01573 and LVP-V-01579, located on the ammonia dilution skid downstream from dilution air fans LVP-FAN-00001 and LVP-FAN-00002, respectively, are used to isolate the fans from the downstream dilution air lines during maintenance on the fans.
- Local manual PCV LVP-PCV-05563C located on the instrument air line to the ammonia flow control valve controls the air pressure to the valve actuator. The pressure will be set at initial plant startup and then periodically checked to ensure it is within the proper range.
- Local manual PCV LVP-PCV-0555 located on the instrument air purge line to the seals on the dilution air fans controls the air pressure to the seals. The pressure will be set at initial plant startup and then periodically checked to ensure it is within the proper range.

- Local manual PCVs LVP-PCV-0536A and LVP-PCV-0536B located on the instrument air supply line to LVP-PCV-05563C and LVP-PCV-0555 controls the air pressure to the downstream PCVs. The PCVs LVP-PCV-0536A and LVP-PCV-0536B are installed parallel, with one in service and the other offline, which allows maintenance on one PCV without shutting off the air supply. The pressure will be set at initial plant startup and then periodically checked to ensure it is within the proper range.

4.1.6.2.5.3 Automatic and Manual Actions

The following subsections describe the conditions under which important features are activated and whether these features are activated automatically or manually. For additional details, refer to the operating procedures that govern the operator response to alarms.

Dilution Air Fans. Ammonia dilution fans can be started or stopped from either the PCJ or by local switches located on the ammonia dilution skid. The fan speed can only be controlled from the PCJ.

During normal operation, the operator places the PCJ hand switches for both fans to "Manual." Using the Duty/Standby selector switch, the operator selects one fan as "Duty" and the other as "Standby 1." The operator then manually starts the duty fan. Once the duty fan is running, the operator places hand switches for both fans in "Auto." In the event that the duty fan fails, the standby fan will auto start. Failure to place the standby fan in "Auto" will not allow it to start.

Dilution Air Dampers. During normal operation, both dampers will be placed in "Auto." When a fan is "Running," the corresponding valve will "Auto Open." When the fan is no longer running, the valve will "Auto Close."

Dilution Air Supply Valve. Dilution air supply valve LVP-YV-0538 has a position indicator on the PCJ but no PCJ control. It will be opened automatically by the PPJ system when all of the SS interlocks that automatically close it are cleared (refer to Section 4.1.6.2.2.5).

Ammonia Flow Control. Ammonia supply valve LVP-YV-0560 is opened and closed by a hand switch LVP-HS-0560 in the PCJ. It is normally open during operation. All the interlocks associated with LVP-YV-0560 described in Section 4.1.6.2.2.5 must be cleared before it will open.

Ammonia supply block valve LVP-YV-0528 has a position indicator on the PCJ but no PCJ control. It will be opened automatically by the PPJ system when all the SS interlocks that automatically close it are cleared (refer to Section 4.1.6.2.2.5). One of these interlocks is that there must be adequate dilution airflow.

The ammonia flow rate is controlled by adjusting ammonia flow controller LVP-AC-0523 setpoint (parts per million by volume) to the desired ammonia slip (ammonia concentration downstream from the SCR). The highest value from the ammonia analyzers (LVP-AE-0522 and LVP-AE-0523) at the outlet of the TCO skid is the input signal to the controller.

4.1.6.2.5.4 Setpoints and Ranges

The setpoints and ranges for the SS interlocks described in Section 4.1.6.2.5.5 (Interlock, Electric Heater High Outlet Temperature Interlock, TCO Skid Outlet High Temperature Interlock, and TCO Skid Low Outlet Temperature Interlock) are provided in the LAW DSA.

The setpoints and ranges associated with PCJ and PPJ indications that have an engineering basis are provided in 24590-LAW-JDX-LVP-00001.

The setpoints and ranges associated with the PCJ indications that are configurable by the operator are provided in the (**TBD**) *LAW Facility LOP/LVP System Tunable Report*.

4.1.6.2.5.5 Interlocks, Bypasses, and Permissives

The following sections describe the important system interlocks, bypasses, and permissives germane to the ammonia dilution skid. Refer to the detailed design documentation for additional detail.

The following conditions will cause ammonia supply valve LVP-YV-0560 override close:

- LVP-TSHH-0236/0237 (caustic scrubber outlet temp.) (SS)
- LVP-PSLL-0139/0140 (low-low header vacuum) (SS)
- LVP-PSHH-0139/0140 (excessive header vacuum) (SS)
- LVP-YV-0097 not closed (Caustic Scrubber bypass valve)
- LVP-TSLL-0552/0554 (TCO skid outlet temp.) (SS)
- LVP-TSHH-0552/0554 (TCO skid outlet temp.) (SS)
- LVP-FSHH-0529 (ammonia flow)
- LVP-FSLL-0539 (dilution airflow)
- LVP-TSHH-0519 (SCR outlet temp.)
- LVP-FSHH-0530/0531 (ammonia flow) (SS)
- LVP-FSLL-0540/0541 (dilution airflow) (SS)
- LVP-TSHH-0517 (SCR inlet temp.)

The following conditions will cause ammonia supply valve LVP-YV-0528 (SS) override close:

- LVP-TSHH-0552/0554 (TCO skid outlet temp.) (SS)
- LVP-TSLL-0552/0554 (TCO skid outlet temp.) (SS)
- LVP-YV-0097 not closed (caustic scrubber bypass valve)
- LVP-TSHH-0236/0237 (caustic scrubber outlet temp.) (SS)
- LVP-FSHH-0530Z/0531Z (ammonia flow) (SS)
- LVP-FSLL-0540/0541 (dilution airflow) (SS)
- LVP-PSLL-0139/0240 (low-low header vacuum) (SS)
- LVP-PSHH-0139/0240 (excessive header vacuum) (SS)

To prevent excessive ammonia flow into the TCO, a high-high flow alarm on LVP-FSHH-0529 will close ammonia supply valve LVP-YV-0560.

A low-low ammonia flow alarm on LVP-FSLL-0529 will stop feed to both melters.

To prevent releases of ammonia and (or) nitrogen oxides harmful to workers, collocated workers, and (or) the public, high-high ammonia flow alarm on LVP-FT-0530/0531 or low-low dilution airflow alarm on LVP-FT-

0540/0541 will close ammonia line supply valve LVP-YV-0528 (SS) and override close ammonia supply Valve LVP-YV-0560. The flow meters are SS instruments.

A low-low flow alarm on LVP-FI-0539 (FAN-00001/00002 discharge) will override close ammonia supply valve LVP-YV-0560.

A low-low LVP-FAN-00001/00002 DP on LVP-PDT-0532/0534 will override stop the corresponding fan.

A high-high LVP-HEPA-00004A/00004B DP on LVP-PDT-0546/0549 will override stop the corresponding fan.

Setting LVP-HS-0558B to "Start" opens upstream valve LVP-YV-0547/0550 on duty fan and starts duty FAN-00001/00002. If upstream valve does not open, a signal will override stop the corresponding fan.

4.1.6.2.6 Caustic Scrubber Control Features

The following sections describe the system indications, alarms, and system control features that are used for operation and performance monitoring of the caustic scrubber (LVP-SCB-00001), caustic collection tank (LVP-TK-00001), and associated piping, pumps, and valves.

The caustic scrubber system main functions are to cool the incoming hot offgas stream from the SCO/TCO skid, scrub acid gases out of the gas stream, and neutralize the resulting aqueous acids formed in the process.

4.1.6.2.6.1 System Monitoring

The following subsections describe important system monitoring that is used for operation and performance monitoring of the caustic scrubber system. Refer to the detailed design documentation for additional detail. All control room instruments and controls are displayed on the caustic scrubber control screen LOG-LVP-06. (Refer to Section 4.1.6.2.5.2 for other instruments and controls that are locally mounted outside of the control room.)

Inlet Pipe to Outlet Pipe Overall Caustic Scrubber Differential Pressure. The DP (in H_2O) across the caustic scrubber is provided in the control room via LVP-PDI-0047 (SS) and LVP-PDI-0094 (SS) to inform the operator when the DP across the scrubber has increased above normal. High DP and high-high DP are alarmed on the PCJ. The high-high DP trips LVP-PDAHH-0047/0094 also alarm in the PPJ.

Incoming Hot Offgas Cooling. The hot offgas enters near the bottom of the scrubber where it is contacted with extremely small water droplets from the air atomized quench sprays, a portion of the water is evaporated, which cools the incoming the offgas stream. There are no controls, instrumentation, or alarms in the control room concerning the direct monitoring and control of the offgas cooling performance. An indication of poor cooling performance could be detected by an increase in the scrubber outlet offgas stream temperature. (Refer to Section 4.1.6.2.5.2 for locally mounted quench spray controls and performance monitoring instrumentation.) There are no alarms to warn of a change in the initial water and airflow rates or pressures.

Caustic Scrubber Process Service Water Supply. The caustic scrubber process service water (PSW) supply pressure (psig) is provided in the control room via LVP-PI-0216 (SS) to inform the operator that there is sufficient water pressure to maintain sufficient water to the quench sprays to cool the hot incoming offgas stream. Both low pressure and low-low pressure alarms are on the PCJ. The low-low pressure trip LVP-PALL-0216 (SS) also alarms in the PPJ.

Caustic Scrubber Out Temperature. The caustic scrubber out temperature (°F) is provided in the control room via LVP-TI-0236 (SS) and LVP-TI-0237 (SS) to inform the operator when the quench sprays for cooling the incoming hot offgas are not efficiently cooling the gas stream. Both temperature indicators have high temperature

and high-high temperature alarms on the PCJ. The high-high temperature trip alarms LVP-TAHH-0236/0237 also alarm in the PPJ.

Caustic Scrubber Scrub Flow. The caustic scrubber scrub flow (gpm) is provided in the control room via LVP-FI-0065 (PCJ) and LVP-FI-0221 (SS) to inform the operator that sufficient buffer solution is being supplied to the top of the packing to neutralize the acids formed in the packed section. Both low flow and low-low flow alarms are on the PCJ. The low-low trip alarm LVP-FALL-0221 also alarms in the PPJ.

Caustic Scrubber Scrub Pressure. The caustic scrubber scrub pressure (psig) is provided in the control room via LVP-PI-0064 and LVP-PI-0220 (SS) to inform the operator that there is the normal buffer solution pressure for the indicated flow rate. Both high and low pressure alarms are on the PCJ. There is also a separate low-low pressure trip LVP-PALL-0220 that alarms in both the PCJ and PPJ.

Caustic Scrubber Scrub Solution Temperature. The caustic scrubber scrub solution temperature (°F) is provided in the control room via LVP-TI-0065 to inform the operator that the Quench sprays are operating properly to maintain the scrubber offgas temperature sufficiently low such that the exhausters will not become overheated. There are no temperature alarms on the PCJ.

Caustic Scrubber Scrub Solution Density. The caustic scrubber scrub solution density (lb./ft^3) is provided in the control room via LVP-DI-0065 to inform the operator that the salts are not increasing in the scrub solution. There are no density alarms on the PCJ.

Caustic Scrubber Scrub Solution pH. The caustic scrubber scrub solution pH is provided in the control room via LVP-AI-0051 to inform the operator the buffer solution pH is trending up or down. This information is used by the operator to adjust the flow of caustic to the caustic collection tank buffer solution via the caustic recirculation pumps. There are low, high, and high-high pH alarms on the PCJ.

Caustic Recirculation Pump Flow. The caustic recirculation pump flow (gpm) is provided in the control room via LVP-FI-0205 to inform the operator that there is sufficient solution being recirculated to the caustic collection tank to provide solution mixing. Both low flow and low-low flow alarms are on the PCJ.

Caustic Collection Tank Solution Level. The caustic collection tank solution level (gallons) is provided in the control room via LVP-LI-0055B to inform the operator that there is sufficient solution in caustic collection tank to continuously feed the associated pumps. The tank level (in) is also shown on LVP-LI-0055 and LVP-LI-0055A. The tank solution level is also used to determine when solution must be transferred out of the tank and to determine when the solution transfer should be terminated to maintain sufficient solution to maintain all operations. There are high, high-high, low, and low-low alarms on the PCJ.

Caustic Collection Tank Berm Level. The caustic collection tank berm level (inches) is provided in the control room via LVP-LI-0092 to inform the operator that there is solution leaking into the tank berm area from piping or the tank overflow line. A high level alarm is on the PCJ.

Caustic Scrubber Differential Pressure. The caustic scrubber DP (in. H_2O) is provided in the control room via LVP-PDI-0093 to inform the operator when the DP has increased to the point that the demister should be flushed to reduce the DP. A high DP alarm is on the PCJ.

Caustic Scrubber Packing Bed Differential Pressure. The caustic scrubber packing bed DP (in. H_2O) is provided in the control room via LVP-PDI-0214 (PCJ) to inform the operator when the packing bed DP has increased to the point that the bottom of the packing should be flushed to reduce the DP. Operating with a higher than normal packing DP would reduce the margin between normal operation and the flood point of the packing.

A packing flood condition is to be avoided because it would cause the melter to pressurize. There is a high packing DP alarm on the PCJ.

Caustic Scrubber Solution Level. The caustic scrubber is designed to operate with no solution accumulation in the bottom of the vessel and is free draining to the caustic collection tank via the 8 in. drain piping. Level indicator LVP-LI-0090, indicating inches of water in the scrubber bottom, with associated instrumentation is included in the design solely to warn of the unlikely event of a solution volume accumulation that could compromise the scrubber operation by impeding the offgas flow. High level and high-high level are alarmed on the PCJ.

4.1.6.2.6.2 Control Capability and Locations

The following components are manually operated during normal operations and can be operated locally (at the panel/component).

Instrument Air Rotameters for Instrument Line Purging. The instrument sensing lines to each of the two DP transmitters (LVP-PDT-0047 and LVP-PDT-0094) across the caustic scrubber (inlet pipe to outlet pipe) are continuously purged with about 1.5 SCFH of instrument air to minimize contamination migrating to the instruments. The purge also minimizes the possibility of line plugging from a buildup of solids from the process air. The small airflow meters (commonly referred to as purgerators) are mounted on the instrument racks near the DP transmitters. There are no alarms to warn of any malfunction of the air purge.

Hot Offgas Quench Sprays. The hot offgas is cooled at the bottom of the scrubber by four air atomized water quench spray assemblies. The controls for the quench sprays are manual and are located locally at the scrubber along with the associated instrumentation, which includes water pressure and flow and air pressure as well as flow to each of the four quench spray assemblies. There are no alarms to warn of a change in the initial water and airflow rates or pressures.

Caustic Collection Tank Berm Drain. The caustic collection tank berm normally contains no solution. Any solution accumulation within the berm can be drained by opening the manual drain valve LVP-V-01406 located just outside of the berm. There is a high solution level alarm on the PCJ.

Caustic Scrubber Demister Flush. The current design intent for the demister flush is to adjust the water flow rate using manual valve LVP-V-00016 located near the caustic scrubber. The flow rate of the demister flush water is observed on LVP-FI-0202, also mounted locally near the caustic scrubber.

Caustic Scrubber Packing Flush. The current design intent for the packing flush is to adjust the water flow rate using manual valve LVP-V-00142 located near the caustic scrubber. The flow rate of the packing flush water is observed on LVP-FI-0202, also mounted locally near the caustic scrubber.

4.1.6.2.6.3 Automatic and Manual Actions

The following instruments and controls are in the control room and are operated from there unless otherwise noted. Operator general response actions in responding to alarms are listed; however, specific actions will be communicated in alarm response operating procedures to be developed later.

Caustic Scrubber Bypass. The caustic scrubber can be bypassed by opening valve LVP-YV-0097 (SS) using LVP-YC-0097A for open/closed valve control. The bypass valve is a dual-control valve, meaning it can be closed or opened by the PCJ or the PPJ system. The valve is normally controlled manually and remotely using the PCJ. Various safety interlocks within the PPJ system are overriding. Under certain conditions, the PPJ

system will automatically open the bypass valve overriding PCJ manual control. The PPJ safety interlocks are described further in Section 4.1.6.2.6.5.

The PCJ provides high DP alarm across the caustic scrubber via LVP-PDI-0094. The operator response to the PCJ high DP alarm is limited to ensuring the key pertinent operating parameters (quench sprays, demister and packing DPs, scrub solution flow) are all in their normal operating ranges and restoring any that are found to be out of range. All corrective actions are manual.

Caustic Scrubber Scrub Flow Control. The caustic scrubber scrub flow rate is controlled by adjusting manual control valve LVP-V-01405 located near the scrubber while the flow rate is indicated on LVP-FI-0221. Scrub solution flow is critical for the absorption of acid gases and may also aid in final cooling the offgas. Operator responses to the PCJ low flow alarm would include checking pump operation, scrub line isolation valve position (LVP-YV-0219), and LVP-TK-00001 liquid level. The scrub line isolation valve, LVP-YV-0219 (SS), may also be closed automatically by the PPJ system when both the LVP-PSLL-0220 and the low flow alarm LVP-PALL-0220 are actuated. All corrective actions are manual.

Caustic Scrubber Process Service Water Supply. The caustic scrubber PSW supply pressure is provided in the control room via LVP-PI-0216 (SS). The PSW system supplies water to the quench sprays and the water pressure is critical for correct quench spray performance, which is required to cool the hot incoming offgas. Operator response to the PSW PCJ low pressure alarm must be rapid to correct the problem or the TCO/SCO skid must be shut down and bypassed. The PSW isolation valve (LVP-YV-0215) is opened and closed by hand switch and LVP-YC-0215.

Caustic Scrubber Scrub Solution Temperature Control. The caustic scrubber scrub solution temperature is controlled by manual operation of the quench spray assembly controls, as noted in 4.1.6.2.6.2 above. Operator responses to the PCJ high temperature alarm would include checking for correct operation of the quench sprays. All corrective actions are manual.

Caustic Scrubber Scrub Solution Density. The caustic scrubber scrub solution density may be controlled by water addition; however, no water addition is necessary during normal operation. Due to the accumulation of excess water in the process and the required periodic pump out of scrubber solution, the solution density will not increase during normal operation. Valve controller LVP-YC-0069 to adjust the water supply valve will be operated in manual only, and the valve will remain closed during normal operation. There are no alarms for solution density.

Caustic Scrubber Scrub Solution pH. The caustic scrubber scrub solution pH is controlled by the continuous addition of a small flow of 5 M sodium hydroxide via valve LVP-AV-0051. Due to the long undefined lag time between the addition of sodium hydroxide and the effect on the large tank solution pH, controller LVP-AC-0051 will be operated in manual and adjusted as necessary based on the pH indication trend over time. There are low, high, and high-high alarms for solution pH.

Caustic Recirculation Pump Flow. The caustic recirculation pump (LVP-PMP-00002A/B) flow being returned to LVP-TK-00001 is controlled by adjusting manual valve LVP-V-00160 located inside the tank berm. During pump down of excess solution from the tank, the current design intent is to control the flow rate by adjusting manual valve LVP-V-00159 located inside the berm. The solution flow rate while pumping either of these two routes is indicated on LVP-FI-0205. Both low and low-low solution flow alarms are on the PCJ.

Caustic Collection Tank Solution Level. The caustic collection tank solution level is controlled by operator action to pump the correct volume out of the tank using one of the caustic recirculation pumps and selecting the solution destination by opening either valve LVP-YV-0095 using LVP-YC-0095 or valve LVP-YV-0096 using

LVP-YC-0096. The valve control provides only open/closed control for the route and the flow rate is set by manual valve position above. The operator response to the PCJ high level alarm would be to pump solution out of the tank before the level reaches the tank overflow. The operator response to the PCJ low level alarm would be to add PSW to the tank via valve LVP-YV-0069 using LVP-YC-0069 in manual mode.

Caustic Scrubber Demister Flush. The caustic scrubber DP is controlled by periodic demister water flush to reduce the DP. The current design intent is to use manual valve LVP-V-00016, located near the caustic scrubber, to valve-in and isolate the flush water flow. Water flow is adjusted using the manual valve to give the desired flow rate. The flow rate of the demister flush water is observed on LVP-FI-0202, also mounted locally near the caustic scrubber. The valve is re-closed at the end of the flush cycle.

Caustic Scrubber Packing Bed Flush. The caustic scrubber packing bed DP is controlled by periodic water flush to reduce the DP. The current design intent for the demister flush is to initiate the flush and to adjust the water flow rate using manual valve LVP-V-00142 located near the caustic scrubber. The flow rate of the packing flush water is observed on LVP-FI-0202, also mounted locally near the caustic scrubber.

Caustic Scrubber Out Temperature. The caustic scrubber out temperature (°F) is indicated on LVP-TI-0236 and LVP-TI-0237 and controlled by efficient quench assembly operation. Refer to Section 4.1.6.2.6.2 above for the manual quench spray controls. Operator response to the PCJ high temperature alarm would be to check the operation of the quench sprays and restore to the correct control parameter values.

4.1.6.2.6.4 Setpoints and Ranges

The safety-related setpoints and ranges are documented in the TSRs. (**TBD**)

The setpoints and ranges associated with PCJ indications that have an engineering basis are provided in 24590-LAW-JDX-LVP-00001.

The setpoints and ranges associated with the PCJ indications that are configurable by the operator are provided in the (**TBD**) *LAW Facility LOP/LVP System Tunable Report*.

4.1.6.2.6.5 Interlocks, Bypasses, and Permissives

The following sections describe the important system interlocks, bypasses, and permissives associated with the caustic scrubber. In general, there are PCJ alarms (high or low) that warn the operator of a parameter value that is exceeding the normal operating limits. There may also be PCJ interlocks that trip before or at the same time as the PCJ alarm sounds to protect against equipment damage. The safety interlocks initiated by the PPJ system override the PCJ controls. The PPJ alarms not only notify the operator that the control parameter is out of limits but also provide indication that the PPJ interlock has tripped the system to the safety design position. Permissives provide protection against manual or control actions until the system in question is in the correct configuration for the impending change in configuration, such as sufficient solution level in a tank before pump start. Refer to the detailed design documentation for additional detail.

Caustic Scrubber High Differential Pressure Interlocks (Safety Significant). The caustic scrubber DP interlocks actuate (open) the caustic scrubber bypass valve to maintain the offgas system flow capability if caustic scrubber DP increases to a predetermined setpoint. This safety function ensures the melter offgas system flowpath is maintained if the caustic scrubber begins to be plugged or flooded thereby preventing a subsequent loss of melter depression and offgas release whenever any melter has a cold cap. High DP across the scrubber from the inlet pipe to the outlet pipe (as displayed on LVP-PDI-0047 and LVP-PDI-0094) (both SS) will cause the following actions to occur:

1. Close the caustic scrubber isolation valve LVP-YV-0219 (SS) on the recirculation line from the caustic collection tank.
2. Close the caustic scrubber spray water addition supply valves (LVP-YV-0201 and LVP-YV-0215).
3. Open the caustic scrubber bypass valve LVP-YV-0097 (SS) by deactivating solenoid valve LVP-YY-0097B.
4. In the PCJ, deactivates solenoid valve (LVP-YY-0097A) to ensure that the valve LVP-YV-0097 opens.

The following cascading interlock trips due to the opening of the scrubber bypass valve LVP-YV-0097 (SS).

Caustic Scrubber Bypass Valve Not Closed Interlocks (Safety Significant). Upon detection of the caustic scrubber bypass valve no longer being closed, the following actions occur:

1. Power to the catalytic oxidizer electric heater is isolated.
2. The ammonia supply to the SCO/SCR skid is isolated.
3. The SCO/SCR bypass valve LVP-YV-0501 (SS) is opened.
4. In the PCJ, override closes ammonia supply valve LVP-YV-0560.

Other Melter Offgas System Interlocks that Open the Scrubber Bypass Valve (Safety Significant). (Refer to interlock action tables on P&ID 24590-LAW-M6-LVP-00001001 and Section 6.1.6.2.1.5).

1. LVP low header vacuum interlock (safety interlock actuated by the PPJ system)
2. LVP excessive vacuum interlock (safety interlock actuated by the PPJ system)
3. Loss of normal power interlock (safety interlock actuated by the PPJ system)

Caustic Scrubber Recirculation Line Low Pressure Interlocks (Safety Significant). This safety function prevents a loss of melter depression due to excessive leakage into the melter offgas system because of a failed recirculation line. Upon detection of low pressure in the recirculation line as displayed on LVP-PI-0220 (SS), the recirculation line isolation valve LVP-YV-0219 (SS) is closed. This interlock also activates the PCJ permissive to allow LVP-PMP-00003A/B to start.

Caustic Scrubber Recirculation Line Low Flow Interlocks (Safety Significant). This recirculation line flow detection instrumentation is provided to monitor caustic scrubber scrub solution recirculation line flow. Upon detection of low-low flow, feed to the operating melter is terminated (LFP/LCP systems). The method of feed termination is by isolating air and water to the melter feed ADS pumps (deactivates SS solenoid valves to close isolation valves). A timed delay in water isolation is allowed for flushing activities, with related analytical limits and setpoints accounting for this time delay.

Caustic Scrubber High Outlet Temperature Interlock (Safety Significant). Temperature instrumentation (LVP-TT-0236 and LVP-TT-0237) downstream of the caustic scrubber unit outlet is provided to monitor offgas temperatures. Upon detection of high temperature downstream of the caustic scrubber unit outlet, the following actions shall occur:

1. In the PPJ, isolate power to the catalytic oxidizer electric heater.
2. In the PPJ, isolate the ammonia supply to the SCO/SCR skid (LVP-YV-0528).
3. In the PPJ, open the SCO/SCR skid bypass valve (deactivates solenoid valve LVP-YY-0501B).
4. In the PCJ, isolate power to the catalytic oxidizer electric heater.

5. In the PCJ, isolate the ammonia supply to the SCO/SCR skid (YV-0560).
6. In the PCJ, open the SCO/SCR skid bypass valve (deactivates solenoid valve YY-0501A).

Caustic Scrubber Low Pressure Water Supply Interlock (Safety Significant). This safety function prevents a loss of melter depression due to excessive leakage into the melter offgas system because of a failed process water line. Upon detection of low-low header pressure, LVP-PSLL-0216, (SS) in the process water line, sends a signal to close the process water line isolation valve LVP-YV-0201 (SS).

Caustic Scrubber Demister and Packing Spray Water Supply Interlock. (Interlock actuated by the PCJ only.) This PCJ interlock shuts off the water supply for the demister and packing sprays by closing LVP-YV-0215 via LVP-LSHH-0055B or LVP-PSLL-0216 or LVP-PDSHH-0047 or LVP-LSHH-0090. The interlock is actuated by high-high solution level in the caustic collection tank or by solution detection in the bottom of the caustic scrubber via LVP-LSHH-0090. The water supply to the caustic recirculation pump suction line is also isolated via LVP-LSHH-0055B by closing LVP-YV-0069. LVP-LSHH-0055B interlock also stops caustic and PSW addition to the caustic collection tank by closing control valves LVP-AV-0051 and LVP-DV-0065 respectively. These interlocks are intended to prevent excess solution from continuing to accumulate in the caustic collection tank.

LVP System Secondary Offgas Drain Valves Interlock. (Interlock actuated by the PCJ only). This PCJ interlock provides the open and closed sequence necessary for the two drain valves to drain the 18 in. pipe low section between the scrubber outlet and the exhauster inlet. While drain valve LVP-YV-0223 is open, drain valve LVP-YV-0222 is closed, which allows any water collected in the 18 in. pipe to drain into the 2 in. drain pipe. In the next step in the sequence, LVP-YV-0223 is closed and LVP-YV-0222 is opened, which allows the 2 in. pipe to drain empty to the caustic collection tank. In the last step in the sequence, LVP-YV-0223 is closed and LVP-YV-0222 is again closed.

Caustic Collection Tank Low-Low Solution Level Interlock. (Interlock actuated by the PCJ only). This PCJ interlock provides protection of the pumps fed from the tank by sending an “Override Stop” signal to the pumps via LVP-LSLL-0055B.

Caustic Addition Valve Interlocks. (Interlock actuated by the PCJ only). This PCJ interlock closes caustic addition control valve LVP-AV-0051 via LVP-ASHH-0051 to prevent the pH in the caustic scrub solution from becoming too high. The interlock is activated by a high-high pH on LVP-ASHH-0051, a low-low caustic scrub solution flow on LVP-FSLL-0065, a high-high level in the caustic collection tank (LVP-LSHH-0055B), or if neither of the caustic blowdown transfer pumps LVP-PMP-00002A/B are running.

Caustic Scrubber Recirculation Line Low Flow Interlocks. (Interlock actuated by the PCJ only). This PCJ interlock (LVP-FSLL-0065) stops caustic solution recirculation pumps LVP-PMP-00003A/B and closes caustic addition control valve LVP-AV-0051.

Caustic Blowdown Low-Low Flow Interlock. (Interlock actuated by the PCJ only). This PCJ interlock (LVP-FSLL-0205) provides protection for the pumps fed from the caustic collection tank by isolating electrical power to the pumps (LVP-PMP-00002A/B).

4.1.6.2.7 Exhauster Control Features

The following sections describe the system indications, alarms, and system control features associated with the offgas exhausters (LVP-EXHR-00001A/00001B/00001C).

4.1.6.2.7.1 System Monitoring

The following subsections describe important instrumentation that is used for operation and performance monitoring.

Exhauster Speed. Each exhauster is equipped with a shaft speed sensor (provided by the vendor). The three exhauster speeds (RPM or % of max RPM) are indicated on the PCJ (LVP-SI-0120/0123/0126 for exhausters EXHR-00001A/00001B/00001C, respectively). The speed of the running, duty exhausters will vary depending on the offgas system flow rate and flow resistance through the system. The speed of the two exhausters should closely match except during fan switchover. For the running duty exhausters, low and low-low speed alarms are provided on the PCJ.

Bearing Temperature. Temperature elements are provided by the vendor to monitor the inboard and outboard bearing temperature on each exhauster. Bearing temperature (°F) is indicated on the PCJ (LVP-TI-0121 and LVP-TI-0122 for LVP-EXHR-00001A, LVP-TI-0124 and LVP-TI-0125 on LVP-EXHR-00001B, and LVP-TI-0127 and LVP-TI-0128 on LVP-EXHR-00001C). High and high-high bearing temperature are alarmed on the PCJ.

Exhauster Differential Pressure. The DP (in. H_2O) is monitored across each exhauster and provided on the PCJ (LVP-PDI-0135, LVP-PDI-0134, LVP-PDI-133 for EXHR-0001A, -0001B, -0001C, respectively). The discharge side pressure tap is located between the exhauster and the check valve in the discharge line. If the exhauster stops operating or fails, the check valve will shield the discharge pressure tap from the discharge pressure of the other operating exhauster. In such a case, the pressure on the discharge side of the failed exhauster will approach the inlet pressure and low DP across that exhauster will be detected. Low and low-low differential pressure are alarmed on the PCJ. The low DP alarms are disabled when the associated exhauster is off.

ISA System Air Pressure. The inboard and outboard shaft seals on the exhauster are normally purged with air from the ISA system. Each exhauster is fed by a different branch of ISA line. Each purge system has a SS pressure sensor on its ISA supply line (LVP-PI-0156 for EXHR-00001A, LVP-PI-0160 for EHXR-00001B, and LVP-PI-0164 for EXHR-00001C). Pressure is maintained on the seals on all three exhausters, including the standby exhauster, to prevent potential exfiltration of offgas. If low pressure is detected in the ISA supply line to an exhauster, low-normal purge air pressure is alarmed on the PCJ. If low-low pressure is detected, a low-low pressure alarm is activated on the PCJ and a PPJ interlock switches to a backup air supply system.

Backup Air Pressure. Backup air provides purge air in the event normal purge air from the ISA system is lost. Each exhauster has its own backup air supply. The backup air supplies are provided with SS pressure instrumentation. At the bottle rack, there are two stages of pressure regulation. The first stage controls air pressure to 225 psig; the second stage reduces the pressure to 110 psig leading to the purge control panels on the associated exhauster. The bottled air supply pressure is monitored between the two stages of pressure regulation and is displayed on the PCJ (LVP-PI-0158 for EXHR-00001A, LVP-PI-0162 for EXHR-00001B, and LVP-PI-0166 for EXHR-00001C). When the backup bottled air supply is valved-in by the loss of normal purge air interlock, pressure will fall off over time as the bottled air supply is used. The seal purge system supplies less than 1 SCFH of air to each exhauster. The purge air is lost simultaneously into both the exhauster casing and into the exhauster room. Low air pressure is alarmed on the PCJ. Low-low pressure in the bottled air pressure alarms on the PCJ and causes the feed to the melters to shutoff by PPJ interlock. The remaining capacity of air is sufficient to purge the seals for the 2 hr. cold cap burnoff in the melters.

Local pressure indication is provided downstream from the second stage PCV at each bottle rack (LVP-PI-0026 for bottle rack feeding EXHR-00001A, LVP-PI-0014 for EXHR-00002A, LVP-PI-0014 for EXHR-00003A)

Purge Control Panel. Purge control panels are provided on each exhauster skid for controlling the seal airflow rate and pressure to the inboard and outboard shaft seals. A third stage of pressure regulation is provided at the panel that can be manually adjusted. Pressure and flow are indicated locally on each panel. There are two panels per exhauster (one for the inboard seal, one for the outboard seal). For exhauster EXHR-00001A, the local purge panel pressure and flow indication are LVP-FI-0177 and LVP-PI-0178 for the inboard seal panel and LVP-FI-0181 and LVP-PI-0182 for the outboard seal panel. In addition, each purge control panel has a pressure switch that provides low pressure indication on the PCJ. This allows the operator to determine if there has been a local loss of pressure specifically to the inboard or outboard seal, caused by a problem on one of the control panels. The following table summarizes the instruments on the local purge panels.

Purge Panel Local Instrumentation

Exhauster	Inboard Seal	Outboard Seal
LVP-EXHR-00001A	LVP-PNL-00017: FI-0177/PI-0178/PAL-0179	LVP-PNL-00018: FI-0181/PI-0182/PAL-0183
LVP-EXHR-00001B	LVP-PNL-00020: FI-0185/PI-0186/PAL-0187	LVP-PNL-00021: FI-0189/PI-0190/PAL-0181
LVP-EXHR-00001C	LVP-PNL-00023: FI-0193/PI-0194/PAL-0195	LVP-PNL-00024: FI-0197/PI-0198/PAL-0199

Purge Air Isolation Valve Position. The SS valves that switch from instrument service air to bottled purge air on detection of low ISA supply pressure have valve position indication on the PCJ. These valves are LVP-YV-015761/YV-015963 for LVP-EXHR-00001A, LVP-YV-0161/YV-01637 for LVP-EXHR-00001B, and LVP-YV-0165/YV-0167 for LVP-EXHR-00001C.

4.1.6.2.7.2 Control Capability and Locations

The following components are manually operated during normal operations and are operated locally (at the panel/component).

Inlet/Outlet Valves. The inlet and outlet butterfly valves for each exhauster are manually operated. These valves are located at the inlet and outlet pipes of each exhauster skid. The valves are normally maintained open. The valves will only be closed to isolate an exhauster for maintenance.

Bottled Air Pressure Regulation. The backup bottled air supply to each exhauster has two stages of pressure regulation. The first stage PCVs at the bottle rack are manually set at 225 psig. Each exhauster is fed by two air bottles; each bottle has a PCV. The second stage PCV is manually set at 110 psig. The PCV and rack IDs are summarized in Table 4-4 below.

Table 4-4 Bottled Air Pressure Regulation

Bottled Air Supply To:	First Stage PCV	Second Stage PCV
LVP-EXHR-00001A	LVP-RK-00009: LVP-PCV-0304 and LVP-PCV-0305	LVP-RK-00006: LVP-PCV-0022
LVP-EXHR-00001B	LVP-RK-00010: LVP-PCV-0306 and LVP-PCV-0307	LVP-RK-00007: LVP-PCV-0019
LVP-EXHR-00001C	LVP-RK-00011: LVP-PCV-0308 and LVP-PCV-0309	LVP-RK-00008: LVP-PCV-0016

Purge Control Panel. Purge control panels are provided by the vendor on each exhauster skid for controlling the seal airflow rate and pressure to the inboard and outboard shaft seals. The purge control panel provides a third

stage of pressure control. The PCV on the panel is manually set to about 25 psig. A restriction orifice controls the flow to the seals to the desired value given the set pressure. The purge panel control valve is only adjusted during initial setup and for maintenance operations.

Table 4-5 Purge Control Panel Pressure Regulation

Pressure Regulators For:	Inboard Seal	Outboard Seal
LVP-EXHR-00001A	LVP-PNL-00017: LVP-PCV-0176	LVP-PNL-00018: LVP-PCV-0180
LVP-EXHR-00001B	LVP-PNL-00020: LVP-PCV-0184	LVP-PNL-00021: LVP-PCV-0188
LVP-EXHR-00001C	LVP-PNL-00023: LVP-PCV-0192	LVP-PNL-00024: LVP-PCV-0196

Adjustable Speed Drive Cabinet. In addition to automatic control from the PCJ, the exhauster ASDs can be controlled from the ASD's local panel. Local control requires a passcode to gain access. It is anticipated this system will only be used during initial tune testing of the system.

4.1.6.2.7.3 Automatic and Manual Actions

The following subsections describe the conditions under which important features are activated and whether these features are activated automatically or manually. For additional details, refer to the operating procedures that govern the operator response to alarms.

The exhausters can be set to either automatic control or remote, manual control in the PCJ. The exhauster isolation valves can be manipulated only manually and locally.

Exhauster Speed. Exhauster speed can be controlled automatically or manually. During normal operation, exhauster speed is automatically controlled. The exhauster ASDs are adjusted via proportional, integral controllers that receive an input signal from pressure transmitters (LVP-PT-00070, and LVP-PT-00071) located at the inlet of the HEPA preheaters. The pressure instruments provide the vacuum reading in the common offgas header in front of the HEPA preheaters (high select between LVP-PT-0070 and LVP-PT-0071 controls exhauster speed). There is a separate proportional, integral controller for each exhauster (LVP-PC-00023/00020/00017 for exhausters LVP-EXHR-00001A/0001B/0001C, respectively). Automatic exhauster speed control ensures the vacuum at the LVP header is maintained within a setpoint range.

Automatic Startup of Standby Exhauster. Two exhausters are normally set in the PCJ as duty, with the third in standby. An active (duty) exhauster is swapped for the standby exhauster if any one of the following conditions is detected: (1) The inboard or outboard bearing temperature is above a predetermined limit (bearing temperature high-high); (2) Exhauster speed as measured on the active exhauster shaft falls below a predetermined setpoint value (exhauster RPM is low-low); or (3) The DP measured across the active exhauster is below a predetermined setpoint (low-low DP). The high and low standby exhauster startup switches are summarized in the following table.

Standby Exhauster Startup

	LVP-EXHR-00001A	LVP-EXHR-00001B	LVP-EXHR-00001C
Inboard Bearing Temp	LVP-TSHH-0121	LVP-TSHH-0124	LVP-TSHH-0127
Outboard Bearing Temp	LVP-TSHH-0122	LVP-TSHH-0125	LVP-TSHH-0128
Exhauster Speed	LVP-SSLL-0120	LVP-SSLL-0123	LVP-SSLL-0126
Exhauster DP	LVP-PDSLL-0135	LVP-PDSLL-0134	LVP-PDSLL-0133

In the high bearing temperature case, the stop signal is sent to the problem exhauster before the startup signal is sent to the standby exhauster. The problem exhauster coasts down while the starting exhauster spins up. For low

shaft speed or low DP, the standby exhauster is started and brought up to speed before the stop signal is sent to the problem exhauster.

Automatic Melter Feed Shutdown if Exhauster Fails. Two exhausters are required to be running to feed either (or both) melters. If the PCJ determines that only one out of the three exhausters is running (based on detection of low DP across one of the two operating exhausters), feed to both melters is shut down through the Melter 1 and Melter 2 ADS pump managers (normal shutdown sequence). Low DP across the exhausters is detected by LVP-PDI-0135, LVP-PDI-0134, LVP-PDI-133 for Exhausters EXHR-00001A, -00001B, -00001C, respectively. This is an automatic function.

Shifting Exhausters Manually. The exhausters will be periodically swapped to extend exhauster life (standby exhauster started and one of the duty exhausters rotated to standby status), or to rotate an exhauster out of service for maintenance. This process will be done remotely and manually via the PCJ. The procedure for switching the exhausters is under development. The exhausters need to be swapped in a manner that minimizes the time the exhausters are in surge (operating at different speeds). This will involve switching the exhausters to manual as needed to swap the fans, starting the former standby fan and ramping it up to speed, while shutting down the fan to be rotated into the standby position. The two running exhausters at the end of the switchover are set back to duty status and returned to automatic mode. The now shut-down exhauster is set to standby on the PCJ.

Exhauster Inlet/Outlet Valves. The exhauster skid inlet and outlet butterfly valves can only be closed/opened manually and locally. These valves are normally maintained open, except during maintenance activities where the exhausters need to be isolated from the offgas flow.

Exhauster Manual Inlet and Outlet Valves

	LVP-EXHR-00001A	**LVP-EXHR-00001B**	**LVP-EXHR-00001C**
Manual Inlet Valves	LVP-V-00141	LVP-V-00140	LVP-V-00139
Manual Outlet Valve(s)	LVP-V-01549 or -01657	LVP-V-01550 or -01655	LVP-V-01551 or -01653

Seal Purge Air. The seal purge air pressure and flow are set initially at the local purge control panel (rotameters LVP-FI-0181/0189/0197 for exhausters EXHR-00001A/B/C, respectively). The only automatic adjustment in the seal purge air systems occurs at the pressure regulation valves (automatic diaphragm feedback) on the ISA supply line (or bottled air supply rack) and local purge control panels. The PCV tag numbers are identified in Section 4.1.6.2.7.2.

The actuated valves on the purge air supply lines are on/off valves, controlled automatically by the PPJ system. These valves switch from normal ISA supply to backup bottled air on detection of loss of pressure in the normal ISA supply line to each exhauster (see interlock section 4.1.5.2.7.5).

Heat Trace. The exhausters are equipped with heat trace, to prevent condensation when the exhauster is rotated into standby position. The inlet valve is maintained open on the standby exhauster. Without heat trace, the standby exhauster would fall below the dew point and continuously condense and accumulate water. The heat trace at each exhauster is controlled by a local heater control panel. The thermostat setpoint is set at the local panel. The PCJ is not involved. The heat is switched off and on automatically by the local heater panel, based on temperature. When swapping exhausters, the started exhauster will heat up, kicking off the heat trace on that unit. The unit that gets shut down will cool until the heat trace turns on to maintain the setpoint. For maintenance that requires isolation of an exhauster, the heat trace will need to be de-energized as part of the work package.

The heat trace is identified by the following tag numbers on the exhauster P&IDs: LVP-TE-0301 and LVP-TS-0301 for LVP-EXHR-00001A; LVP-TE-302 and LVP-TS-302 for LVP-EXHR-00001B; and LVP-TE-303 and TS-303 for LVP-EXHR-00001C.

Interlocks. PCJ and PPJ interlocks associated with the exhausters and exhauster shaft purge air systems operate automatically as described in the interlock, bypasses and permissives section (Section 4.1.6.2.7.5).

4.1.6.2.7.4 Setpoints and Ranges

The safety related setpoints and ranges are documented in the TSRs. (**TBD**)

The setpoints and ranges associated with PCJ and PPJ indications that have an engineering basis are provided in 24590-LAW-JDX-LVP-00001.

The setpoints and ranges associated with the PCJ indications that are configurable by the operator are provided in the (**TBD**) *LAW Facility LOP/LVP System Tunable Report*.

Environmental Qualification. Classification of the environment for the exhausters is noted as mild (an environment expected because of normal service conditions and extremes (abnormal) in service conditions where seismic is the only design basis even (DBE) of consequence".

- **Vibration:** To ensure proper operations, exhauster vibration levels at the bearings must equal to or below 0.23 in/sec. Maintaining a vibration level equal to or below 0.23 in/sec minimizes vibration aging to insignificant levels. Vibration monitoring will be performed during periodic maintenance.

4.1.6.2.7.5 Interlocks, Bypasses and Permissives

The following sections describe the important system interlocks, bypasses, and permissives associated with the exhausters. Refer to the detailed design documentation for additional detail.

Shaft Seal Purge Air Interlocks (SS). If low-low pressure is detected in the normal ISA supply to the shaft seal purge control panel on an exhauster, a low-low pressure alarm is activated on the PCJ and a PPJ interlock opens a valve on the backup bottled air supply and closes the supply valve on the ISA line. The backup bottled air interlocks for each exhauster are independent of each other. It is therefore possible for the shaft seals on two exhausters to be running on instrument service air, with the shaft seals on the third exhauster are supplied by bottled air. Purge air to the standby exhauster seals is maintained because the exhauster is open to the offgas header (inlet and outlet dampers are maintained open). The interlock trip is alarmed on the PCJ and indicated on the PPJ panel] [Identifying which purge air source was involved.

Seal Purge Air Supply Interlocks

	LVP-EXHR-00001A	**LVP-EXHR-00001B**	**LVP-EXHR-00001C**
Initiating Signal	LVP-PSLL-0156	LVP-PSLL-0160	LVP-PSLL-0164
Bottled Air Supply/Isolation Valve	LVP-YV-0159 opens	LVP-YV-0163 opens	LVP-YV-0167 opens
ISA Supply/Isolation Valve	LVP-YV-0157 closes	LVP-YV-0161 closes	LVP-YV-0165 closes

When the backup bottled air supply is valved-in by the loss of normal purge air interlock, pressure will fall off over time as the bottled air supply is used. The seal purge system supplies less than 1 SCFH of air to each exhauster. The purge air is lost simultaneously into both the exhauster casing and into the exhauster room. If the low-low pressure switch on the bottled air supply to any of the three exhausters is activated (LVP-PSLL-0158/0162/0166 for exhausters EXHR-00001A/B/C, respectively), feed to both melters is shut off by PPJ interlock. Feed to the melters is terminated by first isolating plant service air to the melter feed ADS pumps (LVP-YC-1208 for Melter 1, LVP-YC-2208 for Melter 2), followed by isolation of demineralized water (after

line flushes) to the ADS pumps (LVP-YC-1207 for Melter 1, LVP-YC-2207 for Melter 2). The remaining capacity of bottled air is sufficient to purge the shaft seals for the 2 hr. cold cap burnoff in the melter.

Offgas System Interlocks that Affect the Exhausters. The following SS (PPJ) system interlocks override the automatic proportional, integral control of exhauster speed. Any one of these three interlocks will trip all three exhausters to a predefined setpoint speed and start the standby exhauster, overriding the PCJ PROFIBUS signal. Auto-starting the third exhauster and running all three exhausters at the same speed ensures two exhausters provide the motive force to maintain system confinement should there be a single failure that shuts off one of the three exhausters.

1. LVP header low vacuum interlocks (LVP-PSHH-0139/0140 to controllers LVP-YC-0023A/0020A/0017A)
2. LVP header excessive vacuum interlocks (LVP-PSLL-0139/0140 to controllers LVP-YC-0023A/0020A/0017A)
3. Loss of normal facility power reconfiguration interlocks (UPE-YSLL-2303/2403/2503 to controllers LVP-YC-0023A/0020A/0017A)

In addition to tripping the three exhausters to a setpoint speed, the PPJ interlocks make other adjustments in the offgas system, to establish a known LOP/LVP configuration that ensures that melter depression can be maintained without exceeding the design vacuum of the LOP system components. The additional reconfigurations to other parts of the offgas system, implemented by these safety interlocks, are described in more detail in Section 4.1.6.2.1.5.

4.2 Operations

4.2.1 Initial Configuration

RESERVED for Phase II(b)

4.2.2 System Startup

RESERVED for Phase II(b)

4.2.3 Normal Operation

The offgas system must maintain the melters under vacuum and confine offgas whenever a melter is operating or idling. Normal operations for the offgas system is thus operating with both melters being fed, one melter in idle with the other melter being fed, or two melters in idle. For the purposes of this document, normal offgas operation is defined as requiring offgas flow through the treatment units (carbon bed adsorbers, SCO/SCR catalyst skid and caustic scrubber), with the treatment units operating in their normal ranges. When idling both melters, treatment by the carbon bed adsorbers and SCO/SCR skid would not strictly be required after the cold caps in the melters burned off. Although these treatment units could be bypassed, and the SCO/SCR powered down, when idling two melters for an extended period, such operation would be considered off-normal (refer to Section 4.2.4).

The LOP/LVP system is always on and is designed to automatically respond to variations in melter pressure and to flow and pressure changes in the offgas system. The system is expected to run with little intervention during normal processing.

Operator involvement via the PCJ to operate the system under normal operating conditions includes performance monitoring, batch operations such as periodic cleaning of the film coolers, periodic removal of solids from the SBS vessels, washing/rinsing of the WESPs, and periodic blowdown of solution from the caustic collection vessel. Swapping of pumps and exhausters to extend operating life and maintenance intervals would also be considered a normal operation. Normal operations for each unit in the offgas system are described in the following sections.

4.2.3.1 LOP Melter Pressure Control

Melter pressure control occurs automatically. The control air to the film coolers and the flow control valves downstream from the WESP automatically adjust to changes in melter plenum pressure. Details of film cooler air addition are described below. A melter in idle mode will provide little challenge to pressure control; however, full airflow operation is required to maintain offgas temperatures in the normal range. Reduced melter pressure and flow requirements may be set for longer term idle operation.

4.2.3.2 Film Cooler Normal Operation

Airflow to the primary film cooler comes from two sources. A minimum airflow is supplied from flow controller, LOP-FC-1113. This flow is maintained at its set value during all normal operations. Pressure control air is also added to the film cooler. This air source in modulated to control melter pressure, via LOP-PC-1105 based on input from LMP-PDI-01410A. Pressure control airflow is monitored at LOP-FT-1140, which in turn controls the flow out of the WESP into the LVP header, using LOP-FC-1140 to modulate valve LOP-FV-1140. The combination of air sources to the film cooler is utilized to maintain the protective airflow to minimize solids collection at the film cooler. Automatic pressure control maintains melter pressure as varying amounts of steam and process gases are produced in the melter. A sudden spike in steam production can cause melter pressure to rise. Excess pressure will be relieved automatically by the opening of the valve, LVP-YV-1008, in the standby vent line. The standby line provides a second path to the SBS for continued ventilation.

Airflow is maintained to the standby film cooler from a manual valve. This air is used to purge the standby line and avoid any buildup of solids in the line.

The two film coolers have water spray nozzles to clean these devices. Cleaning will occur on a set periodic basis during operation. Each film cooler has slit pipe spray to clean the film cooler louvers and spray nozzle aimed down the ventilation duct. Each cleaner is normally purged with air to maintain an open passage, with an air / water combination spray for cleaning. Air and water flow must be manually cycled through remotely actuated valves for cleaning. Multiple cycles of air and water will be needed for cleaning. Any increase in the DP across the film cooler and vent line will be a signal for additional cleaning.

Pilot testing suggests that several short 15-sec bursts of water would clean a film cooler without appreciably perturbing with melter vacuum. The timing and the air/water mix may be modified as needed to provide cleaning with minimal interference with melter pressure control. Both film coolers should be cleaned at the end of feeding periods before idling temperatures are reached.

4.2.3.3 Submerged Bed Scrubber and Submerged Bed Scrubber Condensate Vessel Normal Operation

A packed bed of ceramic spheres is positioned in a tank of condensate so that a column of fluid must be penetrated by the melter offgas. The bed and water quench the offgas (i.e., the offgas is rapidly cooled and steam is condensed), leaving a saturated air stream. The scrubber also removes the bulk of the solids in the offgas, although particulate 1 µm and smaller will mostly penetrate the bed. The resultant offgas is further treated

downstream, first for the fine particulate and then for chemical constituents. The SBS has no moving parts and will function reliably to provide this first phase of offgas cleaning. To complete the function of the SBS, however, three services must be provided:

1. Chilled water, used as the ultimate heat sink for the hot process gases
2. Circulation pumps in the SCV, to help with cooling and for management of solids
3. Motive force to overcome the DP of the water bed is supplied by the exhausters at the far end of the offgas train in system LVP

The SBS level is monitored continuously to verify the scrubbing function is maintained. However, with steam condensing and solution circulating to the vessel overflow, level will be held constant.

The continuously circulating scrubber solution collects condensate and solids from the melter. The solution accumulates in the SCV. Solution from the SCV is pumped back to the bottom of the SBS. The eight discharge nozzles are aimed to induce a swirling flow, which tends to center the solids. The condensate overflows back to the SCV. This circulating flow is designed to keep the SBS full and to keep solids in the SBS. A portion of the circulation flow is directed back into the SCV to stir up any solids that might have migrated to the SCV so that the solids would again be accumulated in the SBS. Excess solution and solids are removed from the bed by the water purge pumps, which deliver the low solids slurry to RLD-VSL-00005 in the LAW Facility. Circulation flow is greater than the removal flow so that the bed remains full during a transfer. Both sets of pumps use a bulge, at elevation +28 ft., to house the valves and instruments needed to manage the flow.

Redundant condensate purge pumps, LOP-PMP-00001/00002, are in the SCV, one in automatic and the second in standby. If one pump goes down, isolation valves must be re-aligned by the operator at the PCJ to permit the pump to start. The standby pump is automatically flushed with priming water for a set period as the pump is started. Short lapses in circulating flow are not an issue unless SBS level or temperature are no longer adequately controlled. Manual grab samples may be taken from the circulating condensate in the bulge during the cold commissioning period (only).

Redundant water purge pumps, LOP-PMP-00003A/00003B set just outside of the SBS and draw on a single dip leg in the scrubber. The pumps are self-priming, pulling solution and solids out of the SBS to RLD-VSL-00005 through the bulge. Flush / priming water is available within the bulge, if the pump does not self-prime. When the SCV has collected sufficient fluids (about a 2-day operation), a batch transfer is initiated to RLD. The operator opens the discharge valve for the appropriate pump and initiates the transfer. The PCJ verifies the proper line up before starting the pump. The transfer is manually stopped when the SCV is low or the RLD vessel is full. The large volume of this transfer, about 7000 gals, will carry the accumulated solids with the liquid.

Temperature control of the scrubber solution is maintained by chilled water (CHW system) flow to the SBS coils and jacket. Flow is modulated based on vessel temperature by LOP-TV-1013A for the coils and LOP-TV-1013B for the vessel jacket. The control and flow measurement is positioned on the outlet so that any loss of cooling is detected.

Cooling is also supplied to the SCV jacket. Flow is modulated by LOP-TV-1015. The control temperature is in the bulge, in the circulation line from the scrubber to the SBS. The SBS and SCV cooling provides the heat sink for the steam and hot melter gases as they travel through the SBS.

When idling a melter, there will be no water input to the SBS from the melter feed. The associated SBS will thus begin evaporating water. The SBS overflows into the SCV, the reduction in volume will be observed in the SCV. Water is to be replenished to avoid reducing the level in the SBS and precipitating dissolved solids due to solution

concentration. It is expected that water will be added once a shift, or as needed to limit volume reduction to 20% of total.

4.2.3.4 Wet Electrostatic Precipitator Normal Operation

There is only one WESP in each of the two melter LOP offgas trains and there are no bypass routes around the WESPs. This means that the offgas stream will be passing through each WESP regardless of the operating modes of melter operation or the condition of the remainder of the melter offgas equipment. There are two modes of normal WESP operation: (1) operation the bulk of the time with clean electrodes after water flush; and (2) the periodic, electrode water flush sequence including the time required to dry out the assembly to apply the power to the electrodes to restore the particulate removal operating efficiency.

While the WESP is energized, the particulate in the offgas stream receives a negative electrostatic charge and are then attracted to and captured on to the positively charged cathode tubes. The electrical parameters that control the collection efficiency are automatically adjusted by the control system. As the particulate continues to build up on the cathode, the collection efficiency decreases, which requires a periodic water flush to restore the particulate removal efficiency.

The relatively short time for the electrode water flush is considered as a normal operation because it may have to be performed frequently while the offgas continues to pass through the WESP with a diminished decontamination factor. The electrode water flush sequence is initiated by the operator, but once the sequence is initiated, the execution of the sequence is automatic. The electrode flush requires a 100 gal/min demineralized water flow for about 5 min. The required flush frequency may vary with different feeds and may be needed daily or more often to maintain a high collection efficiency. The transformer/rectifier set must be shut down during the electrode water flush sequence.

Fogging spray nozzles are in the bottom of the WESP to mix with and cool the incoming offgas stream, which increases the particulate removal efficiency. This fogging water flow is controlled to about 0.4 gal/min. A PCV controls the pressure on the DIW supply line to 40 psig. A globe valve downstream from the PCV is used to adjust the total flow to the spray nozzles to the desired value. Flow and pressure can both be monitored locally on the DIW supply line.

The electrode power leads and electrode connections are continuously shrouded by a stream of heated purge air within the electrical insulator housing to prevent condensation and particulate build up that could cause arcing. The operator monitors both the temperature and flow of the purge air.

4.2.3.5 LVP Header Pressure Control

The vacuum at the LVP header is automatically controlled. The exhauster ASDs are adjusted via proportional, integral controllers that receive an input signal from pressure instruments (LVP-PT-0070/0071) located at the inlet of the HEPA preheaters (P&ID 24590-LAW-M6-LVP-00001002). The pressure instruments provide the vacuum reading in the common offgas header in front of the HEPA preheaters (high select between LVP-PT-0070 and LVP-PT-0071 controls exhauster speed). This header combines the flows from both melter LOP trains and from the vessel vent header. Exhauster speed (RPM) is adjusted automatically as necessary, to maintain the vacuum at the HEPA preheater inlet in the setpoint range. The setpoint value is the calculated vacuum that is sufficient to overcome the head of liquid in the SBS and other frictional losses in the LOP system, while maintaining the melter plenum at the desired vacuum relative to the melter annulus and C5V system. If the pressure at the header location rises above a setpoint value, the proportional, integral controllers ramp up the rotational speed (RPM) of the exhausters via the ASDs. This creates more vacuum and flow. If the header pressure reading decreases, the controllers reduce exhauster RPM via the ASDs. There is one controller for each

exhauster (LVP-PC-00023, LVP-PC-00020, and LVP-PC-00017 for LVP-EXHR-00001A/00001B/00001C, respectively). The flow rate through the exhausters must be balanced to prevent surging. The proportional, integral controllers will thus be programmed to operate the exhausters at similar speeds. The programmed RPM speed applied to each exhauster may vary slightly to account for differences in flow resistances through the parallel exhauster paths.

The LVP header vacuum/exhauster speed controls work independently of the melter pressure controls. In the melter, gas/vapor production can vary from interaction of the feed with the melter cold cap. If the melter experiences a surge in gas and water vapor production, pressure control airflow is reduced at the melter film coolers to maintain the melter plenum vacuum in a setpoint range. If gas/vapor production falls off, control air at the film coolers is increased. A flow control valve downstream of the WESP is opened or closed based on the measured control airflow rate into the film coolers. This ensures that the controlled offgas flow from each LOP train into the LVP header remains roughly constant. The speed controls on the exhausters ensure that the vacuum created at the LVP header remains constant to create a constant draw on the LOP trains. The combined melter pressure controls and LVP header pressure/exhauster speed controls ensure that the melter pressure remains in the desired range.

4.2.3.6 HEPA Preheater and HEPA Normal Operation

There are two separate HEPA preheaters and two separate dual HEPA filter trains. This design allows either preheater to be used to heat the offgas going to either of the two HEPA filter banks. This arrangement allows maintenance to be performed on either of the two preheaters or the HEPA filters while still providing a flowpath for the melter offgas. Because the HEPA preheaters and HEPA filters provide the only offgas flowpath between the melters and the exhausters, one preheater and one dual HEPA filter bank will always be in operation.

The HEPA preheaters are the first equipment pieces of the LVP secondary offgas system. The secondary offgas system starts after the two LOP primary offgas systems combine with the vessel vent system in the 18 in. offgas header. The preheaters are necessary to ensure the offgas stream delivered to the HEPA filters is well above the saturation temperature to prevent water condensation from forming, which could cause the filter DP to increase resulting in filter failure. The preheaters are designed to automatically raise the offgas stream temperature by 20°F before entering the HEPA filters.

The final design of the HEPA preheater controls and interlocks is on hold and cannot be accurately depicted now.

Each of the two HEPA filter trains provide double filtration of the offgas stream before the offgas is routed to the mercury mitigation carbon bed. The two HEPA filters in series provide a greater filtration efficiency as well as the secondary stage filter being in place to catch any particulate if the primary stage filter is breached. In normal operation, the primary filter DP will increase as particulate loads on the filter while the secondary filter DP will remain the same. An increase in the secondary filter DP would indicate that the primary filter was starting to fail and pass particulate on to the secondary filter. The main parameter to be monitored by the operator is the DP across each HEPA filter. Because the filter DP is a function of particulate loading as well as the airflow rate, offgas flow instrumentation is also provided.

Because HEPA filters are “consumable” items that must be changed many times during the life of the plant, switching from one HEPA filter train to the other will become a routine operation. The HEPA train switch would be accomplished by first opening the valves on the standby train. The offgas flow would then be divided between the two trains. After the standby train is found to be operating normally, the valves to the train to be removed from service would be closed.

4.2.3.7 Mercury Mitigation Skid Normal Operation

The skid passively removes mercury and acid gases from the offgas stream. The are no batch operations associated with this unit during normal operation. Operators will monitor primary and guard bed temperatures and skid outlet temperature to ensure acceptable reaction heat in the units. Differential carbon oxides can tell the operator if the carbon media is being oxidized in the unit. Pressure drops across the beds will be monitored to determine if the media is plugging. Discharge filter DP will be monitored to determine with the filters need changing. Hydrogen fluoride, hydrogen chloride, and mercury concentrations in the discharge stream will be trended to monitor performance and to predict when media changeout will be needed.

4.2.3.8 Selective Catalytic Oxidizer/Reducer Skid Normal Operation

The skid passively treats organics and reduces nitrogen oxides in the offgas. During normal operations, the skid will be at normal operating temperature. Proper temperature is controlled by feedback to the electric heater temperature controller LVP-TC-0511 from a temperature element located near the outlet of the heater (LVP-TE-0511). Once the SCO/SCR skid reaches operating temperature, the setpoint on LVP-TC-0511 is set at ~750°F for the LAW nominal flowsheet. At this setting the temperature profile through the SCO and SCR catalyst beds should be optimum for reduction of the VOCs and nitrogen oxides (750°F for the SCO and 622°F for the SCR). The oxidation reactions in the SCO add heat to the offgas stream and the addition of ammonia/dilution air upstream of the SCR cools the offgas stream. The setpoint will be left at ~750°F unless it needs to be tweaked to obtain a better temperature profile though the SCO/SCR skid. Variations in the offgas flow rate or number of VOCs may require adjustment to the temperature controller setpoint to maintain the obtain the best temperature for both catalyst beds. The thermal mass of the system prevents large temperature swings and ensures consistent operation.

Ammonia injection is automatically varied based on slip. The ammonia flow control valve varies the injection flow of ammonia to the skid based on ammonia concentration measured downstream from the SCR. This is discussed in more detail in Section 4.1.6.2.5.3.

There are no batch operations associated with this treatment unit. Temperature profile is monitored through the skid. Nitrogen oxide concentrations can be monitored upstream from the SCO/SCR skid and at the stack at different points to help determine, along with ammonia slip, if the media is becoming spent.

During normal operation, the important operating parameters to be monitored are:

- Stack nitrogen oxide concentration (SDJ-AI-2110/2124). Since the purpose of the SCR is to reduce the nitrogen oxides in the offgas stream to nearly zero by reacting it with ammonia to produce nitrogen gas and water monitoring the amount of nitrogen oxides released at the stack is important to determine if the SCR is operating as designed. A sudden increase in the stack nitrogen oxide concentration that cannot be explained by a melter off normal condition will indicate a problem with the SCR or ammonia dilution system.
- Electric heater outlet/SCO inlet temperature (LVP-TI-0511) is important because the SCO was designed to operate at the target temperature of 750°F to achieve 95% VOC reduction.
- SCR inlet temperature (LVP-TI-0517). Monitoring the SCR inlet temperature is important because the SCR was designed to operate in the range of 605 to 620°F to obtain a 98% nitrogen oxide reduction efficiency. The electric heater setpoint may need to be adjusted if the temperature profile across the SCO/SCR skid is not in the desired operating range.
- SCR outlet temperature (LVP-TI-0519). Monitoring SCR outlet temperature is also important to ensure that the SCR remains in the operating range.

- SCR catalyst bed DP (LVP-PDI-0518). The catalyst bed DP needs to be monitored because an increase in DP with a constant offgas flow will indicate that offgas flow through the catalyst is being restricted by degradation of the catalyst or buildup of foreign material on the bed.

If both melters are idled, the skid can be bypassed, as treatment would no longer be required. This will generally be discouraged because of the extended time required to cool the equipment down and then to reheat the equipment to put the unit back online again. If the melters are expected to be idle mode for an extended period, the unit can be bypassed and powered off.

4.2.3.9 Ammonia/Air Dilution Skid Normal Operation

Airflow is maintained at a constant value. The ammonia flow is varied based on ammonia slip measured downstream from the SCR (at LVP-AC-0523). The ammonia flow control occurs automatically with no operator intervention. When the SCO/SCR skid is started up, the ammonia slip concentration setpoint is established on the ammonia flow controller LVP-AC-0523. The LAW offgas nominal flowsheet indicates that at nominal flowsheet conditions, the SCR will have a 98% nitrogen oxide reduction efficiency if the ammonia slip is set at 126 ppm. The operators can leave the setpoint at its initial setting if the SCR reduces the nitrogen oxide concentration by ~98% or better. The nitrogen oxide reduction efficiency will be calculated and trended by engineering. When the nitrogen oxide reduction efficiency shows a definite downward trend, a new ammonia slip setpoint will be determined and the ammonia flow controller adjusted accordingly. The ammonia flow controller will be left at the new setpoint until nitrogen oxide reduction efficiency again shows a downward trend and then a new setpoint will be established.

If the melters are idled, the ammonia slip will increase as the cold cap burns off and the nitrogen oxide challenge to the unit decreases, so the ammonia flow will be naturally pared back, automatically, by the PCJ. If needed, the operators can shut off ammonia flow after the cold caps are burned off. Dilution air is generally beneficial to operation of the exhausters. However, airflow can be shut off if ammonia flow is shut off and the valves are closed on the ammonia and air supply lines to prevent potential backflow of offgas out the air intakes.

During normal operation, the following are important operating parameters to be monitored:

- DP across operating HEPA filter (LVP-PDI-0546 or LVP-PDI-0549). Increasing DP across a HEPA filter is an indication that the filter is plugging and replacement needs to be scheduled.
- DP across operating fan (LVP-PDI-0532 or LVP-PDI-0534). Changing differential across a fan without a change in the dilution airflow is an indication of a problem with the fan
- Dilution airflow (LVP-FI-0539, LVP-FI-0540, LVP-FI-0541). Dilution airflow is determined by the fan speed controller which is set when the SCR/SCO skid is started up. Changes to the dilution airflow without a change in the fan speed need to be investigated. A decreasing trend in the airflow could be caused by plugging of the upstream HEPA filter or deteriorating fan performance.

During normal operation, hand switches for both fans and both dilution air dampers will be in “Auto”. If it is desirable to switch fans, the operator first shuts off the ammonia flow to the SCR by placing the ammonia flow controller LVP-AC-0523 to manual and adjusting the controller to close the valve. The operator then places both fans in “Manual”. Then the operator ramps down the speed of the fan that has been operating while simultaneously ramping up the speed on the fan that has been in standby to keep the total dilution airflow as close to the normal operating flow as possible. The damper for the fan that is being started will auto open when the fan is started. When the speed of the fan that is being shut down is close to zero, the Duty/Standby selector switch is used to place the fan that has been started up in “Duty” and the one that has been shut down to “Standby 1.” The dilution air damper for the fan that is shutting down will auto close when the fan has stopped. When the fans and

dampers have been switched, the operator must return the hand switches for both fans to "Auto" so the standby fan will auto start if the duty fan shuts down. After the fans have been switched, the ammonia flow controller will be returned to auto. And the ammonia slip setpoint re-established.

4.2.3.9.1 Operational Constraints

Per Section 8.3 of 24590-LAW-M6C-LVP-00019, BOF-AMR-PCV-8027 / 8029 / 8031 / 8033, LAW-LVP-PCV-0527, and LAW-LVP-AV-0523 wide open flow coefficients (i.e. CV coefficients) are credited with flow restriction. Either AMR-V-35164 is locked close to maintain flow path through AMR-PCV-8029 or BOF-V-35157 is locked closed to maintain flow path through AMR-PCV-8033. AMR-V-35155 is locked closed to maintain flow through AMR-PCV-8027. AMR-V-35163 is locked closed to maintain flow through AMR-PCV-8031.

4.2.3.10 Caustic Scrubber Normal Operation

The caustic scrubber normal operating mode is continuous regardless of the melter operating mode (melter with or without a cold cap) or the operating status of the other treatment units that make up the entire melter offgas system. Due to the important functions provided by the caustic scrubber, (cooling the hot gas stream and removing acid gases), anything but full operation will be described in the off-normal operations section.

The evaporative offgas cooling action provided at the bottom of the scrubber by the air atomized water quench sprays is required to protect the exhausters from excess temperature anytime the SCO/SCR skid is discharging high temperature offgas. The scrubbing function to remove acid gases is required anytime a melter is operating (being fed, or with a cold cap). The caustic scrubber must always be in full operation unless both melters are idled and the SCO/SCR skid is bypassed.

The caustic scrubber removes residual acid gases by passing offgas through caustic solution cascading down through the packing. The packing ensures adequate contact area. Liquid drains from the bottom of the scrubber into the caustic collection tank where caustic is added to restore the buffer solution pH. There is a liquid seal loop in the drain line between the scrubber and the caustic collection tank to prevent air from the caustic collection tank entering the scrubber.

The caustic buffer solution is then continuously recirculated back to the top of the packing. Recirculation flow rate of the buffer solution and the buffer solution pH are both monitored to ensure there will be sufficient buffer capacity to capture and neutralize the absorbed acid gases with little change in the buffer solution pH in the packing. The packing DP is monitored to determine when the bottom of the packed section needs to be flushed by the bottom packing water sprays. A large increase in the packing DP must be avoided to ensure there will be n packed section "flood", which would stop the offgas flow causing the melter to pressurize.

The desired air and water flow to the quench spray nozzles are set at the start of operations and the instrumentation is monitored each shift to ensure the parameter values remain within the specified ranges. Air and water flow/pressure to the nozzles are monitored to ensure the nozzles are not becoming plugged or eroding. Adjustments can be made as necessary to ensure proper spray performance, based on curves provided by the vendor. Spray nozzle change out is considered a maintenance activity and can be performed without scrubber shutdown.

The correct buffer solution pH is maintained by continuous 5M caustic addition to the buffer solution in the caustic collection tank. The caustic flow rate is adjusted depending on the pH trend as continuously indicated at the pH monitor. Caustic flow is controlled by making small changes the position of the control valve with the valve control in the manual position.

When the entering offgas stream is cooled, most of the water vapor is condensed, which continuously accumulates in the caustic collection tank. This requires a portion of the tank solution to be pumped out periodically. This is a batch transfer that can be performed at any time without any changes in the melter offgas system configuration. The same pumps that pump 120 gals/min of solution out of and back into the tank for tank mixing are used to transfer excess solution to the waste system.

The PCJ instrument system provides the capability for automatically logging of key parameter values for short term storage and a separate long term storage capability is also provided. The important parameters for each system are not yet identified.

4.2.3.11 Exhauster Normal Operation

The exhausters are always on, with two out of three normally operating and one in standby. The speed of the two running exhausters is automatically controlled by the PCJ based on the vacuum reading at the LVP header (high select between LVP-PI-00070 and LVP-PI-00071). Control of LVP header vacuum using the exhausters is described in detail in Section 4.2.3.5. No operator action is needed while the exhausters are running normally in automatic mode.

Periodically, one of the duty exhausters will be swapped with the standby exhauster, to spread normal wear between the three exhausters. Switching exhausters is performed manually and remotely through the PCJ. The procedure for switching the exhausters is under development. The exhausters need to be swapped in a manner that minimizes the time the exhausters are in surge (operating at different speeds). This will involve switching the exhausters to manual as needed to swap the exhausters. If exhauster 1 is to remain duty, and running exhauster 2 is to be swapped for standby exhauster 3, typically exhauster 1 would be locked at a set speed (in manual mode). The former standby fan (exhauster 3, now in manual mode) is started and ramped up to speed. Exhauster 2 is either left in auto and allowed to automatically ramp down while exhauster 3 is ramped up to speed, or exhauster 2 can be manually shut off and allowed to coast down as exhauster 3 is ramped up. As exhauster 2 coasts down, the backflow damper will close. The backflow damper on exhauster 3 will open as the new online exhauster spins up to speed. The two running exhausters at the end of the switchover are set back to duty status and returned to automatic mode. The shut-down exhauster is set to standby on the PCJ. It is anticipated the exhauster switching will be done with both melters in idle (to minimize pressure/flow perturbations and to eliminate the NOx hazard during the exhauster swap), timed with other maintenance activities to minimize impact to plant availability.

4.2.4 Off-Normal Operations

RESERVED for Phase II(b)

4.2.5 System Shutdown

To be completed in Phase II(b)

Shutdown Constraints

The Thermal Catalytic Oxidizer/Reducer (TCO) And Ammonia Dilution Skid O&M manual, 24590-CD-POC-MBT0-00007-05-00004 (page 201), describes shutdown criteria for LAW TCO maintenance activities in which process temperatures are reduced creating the possibility of condensation inside the TCO housings, which could lead to potential corrosion issues. “The exhaust gas contains approximately 10% water which will form condensation below approximately 200°F. During short-time shutdowns, seal the system to maintain heat in the housing and keep the catalyst above 200°F to prevent water condensation before the system starts up again.

During shutdowns that will be long enough for the catalyst to cool below 200°F, all the process exhaust gas should be flushed from the housing by allowing fresh air to enter the system through the process and exit up the stack using the "chimney-effect" of the stack to move the air through the system."

4.2.6 Safety Management Programs and Administrative Controls

RESERVED for Phase II(b)

4.3 Testing and Maintenance

Incomplete – RESERVED for later.

4.3.1 Safety Instrumented Functions (SIF) Testing Intervals

Confirmation of the Probability of Failure on Demand (PFD) calculations (referenced below) remain true when the operational requirements of full functional testing of the Safety Instrumented Functions (SIF) are met on the intervals defined below:

SIF Case (Safety Interlocks)	Full Functional Testing Interval [In YEARS – unless otherwise noted]	Ref.
LAW Melter 1/2 Wet Electrostatic Precipitator High Level (each)	5	24590-LAW-U3C-PPJ-00002
LAW Melter 1/2 SBS High Level (each)	2	24590-LAW-U3C-PPJ-00003
LAW Melter 1/2 SBS Low Level (each)	0.5	24590-LAW-U3C-PPJ-00003
LAW Caustic Scrubber Recirculation Low Pressure	2	24590-LAW-U3C-PPJ-00004
LAW Caustic Scrubber Recirculation Low Flow	2	24590-LAW-U3C-PPJ-00004
LAW Caustic Scrubber Process Water Supply Low Pressure	2	24590-LAW-U3C-PPJ-00004
LAW TCO Heater High Temperature	5	24590-LAW-U3C-PPJ-00005
LAW TCO Skid High Temperature	5	24590-LAW-U3C-PPJ-00005
LAW Ammonia High Flow	2	24590-LAW-U3C-PPJ-00005
LAW Ammonia Dilution Air Low Flow	2	24590-LAW-U3C-PPJ-00005
LAW Carbon Bed High Differential CO Concentration	0.5	24590-LAW-U3C-PPJ-00006
LAW Offgas HEPA Preheater High Temperature	3	24590-LAW-U3C-PPJ-00007
LAW Offgas Header High Pressure	0.25	24590-LAW-U3C-PPJ-00008
LAW Offgas Header Low Pressure	0.25	24590-LAW-U3C-PPJ-00008
LAW Offgas Exhauster-00001A, 1B, 1C Shaft Air Supply Low Pressure (each)	0.25	24590-LAW-U3C-PPJ-00020
LAW Offgas Exhauster-00001A, 1B, 1C Shaft Seal Low Pressure (each)	0.25	24590-LAW-U3C-PPJ-00020

4.4 Supplemental Information

RESERVED

5 Sources, Bases, and Other References

5.1 Source / Basis References

Document Number	Title	Text Reference
24590-WTP-DB-ENG-01-001	*Basis of Design*	BOD
24590-LAW-DSA-NS-18-0001	*Documented Safety Analysis for the Low-Activity Waste Facility*	LAW DSA
24590-WTP-RPT-OP-01-001	*Operations Requirements Document*	ORD
24590-WTP-SRD-ESH-01-001-02	*Safety Requirements Document Volume II*	SRD
DE-AC27-01RV14136	*Hanford Tank Waste Treatment and Immobilization Plant*	WTP Contract
PSD-02-01	*Technical Support Document for Prevention of Significant Deterioration (PSD) Permit – Hanford Waste Treatment Plant*	PSD Air Permit
WA7890008967	*Dangerous Waste Portion of the Hanford Facility Resource Conservation and Recovery Act Permit for the Treatment, Storage, and Disposal of Dangerous Waste*	DWP
NOC 1057	*WDOH Radioactive Air Emissions NOC Approval for WTP LV-S3 Stack for the Combined Melter Offgas/Vessel Vent Exhaust System of the Low Activity Waste Facility (LAW) Construction (Emission Unit 547)*	NOC 1057
DE02NWP-002	*Non-Radioactive Air Emissions Notice of Construction Approval Order Conditions and Restrictions - Diesel Turbines and Fire Pumps*	Non-rad NOC

5.2 Other References

Document Number	Title
24590-101-TSA-W000-0009-166-00001	*Final Report - Regulatory Off-Gas Emissions Testing on the DM1200 Melter System Using HLW and LAW Simulants*
24590-CD-POC-MBT0-00007-03-00001	*Data Sheet - Mechanical Data Sheet, LAW Catalytic Oxidizer/Reducer*
24590-CD-POC-MBT0-00007-03-00003	*Data Sheet - Selective Catalytic Oxidation (SCO) Catalyst*
24590-CD-POC-MBT0-00007-03-00004	*Data Sheet - Selective Catalytic Reduction (SCR) Catalyst*
24590-CD-POC-MBT0-00007-03-00008	*Data Sheet - Heat Exchanger Core, LAW TCO*
24590-CD-POC-MBT0-00007-03-00009	*Data Sheet - Electric Heater, LAW TCO*

Document Number	Title
24590-CD-POC-MBT0-00007-03-00033	*Data Sheet - Insulation Material, LAW TCO*
24590-CD-POC-MBT0-00007-03-00037	*Data Sheet - Heater Control Panel, LAW TCO*
24590-LAW-E1C-UPE-00002	*Safety System - Uninterruptible Power Supply Sizing*
24590-LAW-J0X-J41T-00001	*LAW Facility Safety Instrumented Function Trip Setpoint Index*
24590-LAW-J3-LVP-90009001	*Logic Diagram LAW-T06F03C01 Mercury Mitigation Skid High Differential Cox Interlock (Sheet 1 of 2)*
24590-LAW-JDX-LOP-00001	*Configuration Data Index for LAW Facility LOP System*
24590-LAW-JDX-LVP-00001	*Configuration Data Index for LAW Facility LVP System*
24590-LAW-M4C-LOP-00001	*LAW Melter Offgas System Design Basis Flowsheets*
24590-LAW-M6C-20-00007	*LAW Valve Closure Transient Loads*
24590-LAW-M6C-LOP-00015	*Analytical Limit for Melter Primary and Stand-By Film Cooler Outlet High Temperature Interlocks*
24590-LAW-M6C-LVP-00007	*Power Requirement for LVP Exhausters LVP-EXHR-00001A/B/C*
24590-LAW-M6C-LVP-00019	*Analytical Limits for Ammonia High Flow Interlock and Ammonia Dilution Air Flow Interlock*
24590-LAW-M6C-LVP-00027	*Analytical limits for Carbon Bed High Differential Concentration Interolock*
24590-LAW-M6-LFP-00002001	*P&ID - LAW - LAW Melter Feed Process System ADS Pump Utilities*
24590-LAW-M6-LFP-00004001	*P&ID - LAW - LAW Melter Feed Process System ADS Pump Utilities*
24590-LAW-MAD-LVP-00006	*24590-LAW-MA-LVP-EXHR-00001A/B/C - Exhauster Data Sheet - LAW Offgas Exhauster*
24590-LAW-MKD-LOP-00008	*24590-LAW-MK-LOP-SCB-00001, 24590-LAW-MK-LOP-SCB-00002 - Melter 1 & 2 Submerged Bed Scrubber*
24590-LAW-MKD-LVP-00012	*24590-LAW-MX-LVP-SKID-00002, 24590-LAW-MX-LVP-SKID-00003 - LAW Catalytic Oxidizer / Reducer*
24590-LAW-MPD-LOP-00007	*24590-LAW-MP-LOP-PMP-00001, -00002, -00004, -00005 - Melter 1 and 2 SBS Condensate Purge Pumps, LOP-PMP-00001/2/4/5*
24590-LAW-MVD-LOP-00004	*24590-LAW-MY-LOP-EUDC-00001 - LAW Melter 1 SBS Condensate Vessel Mechanical Data Sheet: Vessel*
24590-LAW-MVD-LVP-00003	*24590-LAW-MV-LVP-ADBR-00001A 24590-LAW-MV-LVP-ADBR-00001B - Activated Carbon Adsorber for Mercury Abatement (LVP-SKID-00001)*
24590-LAW-N1D-LOP-00001	*LOP-SCB-00001 & LOP-SCB-00002 - Melter 1 and Melter 2 Submerged Bed Scrubbers (SBS)*
24590-LAW-N1D-LOP-00002	*LOP-VSL-00001 & LOP-VSL-00002 - Melter 1 & Melter 2 SBS Condensate Vessel*
24590-LAW-N1D-LOP-00003	*LOP-WESP-00001 & LOP-WESP-00002 (LAW) - Melter 1 and Melter 2 Wet Electrostatic Precipitator (WESP)*
24590-LAW-N1D-LOP-00004	*LOP-Offgas Piping (Downstream of Film Cooler to SBS Entry)*
24590-LAW-N1D-LOP-00006	*LOP-PMP-00001&2&4&5 - Melter 1 & 2 SBS Condensate Purge Pumps*

Document Number	Title
24590-LAW-N1D-LOP-00007	*LOP-PMP-00003A/B & LOP-PMP-00006A/B - Melter 1 & 2 SBS Water Purge Pump – Primary & Standby*
24590-LAW-N1D-LOP-P0001	*LOP-SCB-00001 & LOP-SCB-00002 (LAW) - Melter 1 and Melter 2 Submerged Bed Scrubbers (SBS)*
24590-LAW-N1D-LOP-P0002	*LOP-VSL-00001 & LOP-VSL-00002 (LAW) - Melter 1 & Melter 2 SBS Condensate Vessel*
24590-LAW-N1D-LOP-P0004	*LOP-Offgas Piping (Downstream of Film Cooler to SBS Entry*
24590-LAW-N1D-LVP-00001	*LVP-SCB-00001 - LAW Melter Offgas Caustic Scrubber*
24590-LAW-N1D-LVP-00002	*LVP-TK-00001 - Caustic Collection Tank*
24590-LAW-N1D-LVP-00003	*LVP-EXHR-00001A/B/C - Melter Offgas Exhauster*
24590-LAW-N1D-LVP-00004	*LVP-ADBR-00001A/B - Activated Carbon Bed Adsorber*
24590-LAW-N1D-LVP-00005	*LVP-HX-00001 - Catalytic Oxidizer Heat Recovery Exchanger*
24590-LAW-N1D-LVP-00006	*LVP-HTR-00002 - Catalytic Oxidizer Electric Heater*
24590-LAW-N1D-LVP-00007	*LVP-SCO-00001 - Thermal Catalytic Oxidizer*
24590-LAW-N1D-LVP-00008	*LVP-SCR-00001 - NOx Selective Catalytic Reducer*
24590-LAW-N1D-LVP-00009	*LVP-HTR-00001A/B & LVP-HTR-00003A/B - Melters Offgas HEPA Preheater*
24590-LAW-PER-CTST-17-001	*Environmental Performance Demonstration Test Plan*
24590-LAW-P1-P01T-00002	*LAW Vitrification Building General Arrangement Plan at El. 3'-0"*
24590-LAW-P1-P01T-00004	*LAW Vitrification Building General Arrangement Plan at El. 28'-0"*
24590-LAW-P1-P01T-00005	*LAW Vitrification Building General Arrangement Plan at El. 48'-0"*
24590-LAW-P1-P01T-00006	*LAW Vitrification Building General Arrangement Plan at El. 68'-0"*
24590-LAW-P1-P23T-00052	*LAW Vitrification Building Equipment Location Plan El. 48 ft - 0 in / Area 5*
24590-LAW-RPT-ENS-12-001	*LAW Post Accident Monitoring Report*
24590-LAW-RPT-ML-04-0001	*Surges in LAW Melter*
24590-LAW-U0D-W16T-00001	*LAW Room Environment Datasheet*
24590-LAW-U3C-PPJ-00002	*PFD Calculation for LAW Wet Electrostatic Precipitator High Level Interlocks*
24590-LAW-U3C-PPJ-00003	*PFD Calculation for LAW SBS High and Low Level Interlocks*
24590-LAW-U3C-PPJ-00004	*PFD Calculation for LAW Caustic Scrubber Safety Interlocks*
24590-LAW-U3C-PPJ-00005	*PFD Calculation for LAW TCO Heater/Skid High Temperature and Ammonia High/Dilution Air Low Flow Interlocks*
24590-LAW-U3C-PPJ-00006	*PFD Calculation for LAW Carbon Bed High Differential CO Concentration Interlock*
24590-LAW-U3C-PPJ-00007	*PFD Calculation for LAW Offgas HEPA Preheater High Temperature Interlock*
24590-LAW-U3C-PPJ-00008	*PFD Calculation for LAW Loss of Normal Power to Safety Equipment and Oggas Header High/Low Pressure Interlock*
24590-LAW-U3C-PPJ-00020	*PFD Calculation for LAW Offgas Exhausters Shaft Seal Air Supply/Seal Low Pressure Interlock*

Document Number	Title
24590-LAW-Z0C-20-00002	*Design Basis Event: LAW Fire Analysis*
24590-QL-POA-MKAS-00001-01-01	*Drawing - Submerged Bed Scrubber, Flue or Off-Gas LAW Assembly Dwg*
24590-QL-POA-MKE0-00001-06-23	*Drawing - LAW WESP - Details of Fogging Header*
24590-QL-POA-MKE0-00001-06-25	*Drawing - LAW WESP - Electrode Details*
24590-QL-POA-MKE0-00001-06-28	*Drawing - LAW WESP - Collector Details*
24590-QL-POA-MKE0-00001-06-32	*Drawing - LAW WESP - General Arrangement*
24590-QL-POB-MVA0-00002-01-01	*Drawing - LAW Melter 1 SBS Condensate Vessel*
24590-WTP-3DP-G04B-00046	*Engineering Drawings*
24590-WTP-3DP-G04B-00092	*System Verification*
24590-WTP-COR-MGT-15-00001	*Engineering, Procurement, and Construction (EPC) Code of Record*
24590-WTP-DB-PET-09-001	*Process Inputs Basis of Design (PIBOD)*
24590-WTP-GPG-ENG-0170	*Impact Evaluation*
24590-WTP-3DG-J21T-00001	*Safety Instrumented System Implementation*
24590-WTP-RPT-ENG-01-001	*Technical Baseline Description*
24590-WTP-RPT-PR-04-0001-04	*WTP Process Corrosion Data – Volume 4*
24590-WTP-RPT-PT-02-005	*Flowsheet Bases, Assumptions, and Requirements*
OSHA (2011)	*NIOSH Work Practice Guide for Manual Lifting, OSHA Technical Manual (OTM), OSHA Instruction TED 01-00-015, Appendix VII:1-2.*

5.3 System Design Documents

Document Number	Title
24590-CD-POC-MBT0-00007-02-00001	*Calculation - Mass and Energy Balance for LAW TCO Unit & Ammonia/Air Dilution Skid*
24590-CD-POC-MBT0-00007-01-00001	*Drawing - LAW - LAW Thermal Catalytic Oxidizer (TCO) – TCO/SCR and Ammonia Dilution – P&ID*
24590-CM-POA-MEP0-00001-05-00037	*Calculation - Calculations for SrR6AA MGSgs-21 Heat Exchanger - LAW SBS Chilled Water Heat Exchanger*
24590-CM-POA-MVA0-00007-01-02	*Calculation - LAW SBS Condensate Receipt Vessel TLP-VSL-00009A/B*
24590-CM-POA-MVA0-00007-01-06	*Calculation - Finite Element Analysis of Various Nozzles on LAW SBS Condensate Receipt Vessel*
24590-LAW-3ZD-20-00002	*LAW Facility Design Description*
24590-LAW-3ZD-LMP-00001	*LOW-ACTIVITY WASTE MELTER PROCESS SYSTEM DESIGN DESCRIPTION - SYSTEM DESIGN DESCRIPTION*
24590-LAW-3ZD-UPE-00001	*LAW UNINTERRUPTIBLE POWER ELECTRICAL (UPE) SYSTEM DESIGN DESCRIPTION*
24590-LAW-ESQR-ENG-12-0089	*Weight / Seismic / Nozzle Load / Lifting Calculations, J2625, Submerged BED Bed Scrubber Flue or Off-Gas LAW*
24590-LAW-ESQR-ENG-12-0090	*LAW-2 WESP Pressure Vessel Design Calculations LAW-WESP Pressure Vessel Skirt Design Calculations*

Document Number	Title
24590-LAW-ESQR-ENG-12-0091	*DOE 1020-CRPT 08-0406 Review: LAW-1 WESP Pressure Vessel Design Calculation*
24590-LAW-ESQR-ENG-12-0092	*LAW-WESP Pressure Vessel Skirt Design Calculations*
24590-LAW-J1-LOP-00001	*LAW Vitrification System LOP System Block Diagram Primary Offgas Melter 1 SBS/WESP*
24590-LAW-J1-LOP-00002	*LAW Vitrification System LOP System Block Diagram Primary Offgas Melter 2 SBS/WESP*
24590-LAW-J1-LOP-00003	*LAW Vitrification System LOP System Block Diagram Primary Offgas Melter SBS/WESP*
24590-LAW-J1-LOP-00004	*LAW Vitrification System LOP System Block Diagram Primary Offgas Melter 1 Film Coolers*
24590-LAW-J1-LOP-00005	*LAW Vitrification System LOP System Block Diagram Primary Offgas Melter 2 Film Coolers*
24590-LAW-J1X-LOP-00001	*Termination Schedule*
24590-WTP-3DP-G04B-00093	*System and Facility Design Descriptions*

Document Number	Title
24590-LAW-J1X-LOP-00002	*Termination Schedule*
24590-LAW-J1X-LOP-00003	*Termination Schedule*
24590-LAW-J1X-LOP-00004	*Termination Schedule*
24590-LAW-J1X-LOP-00005	*Termination Schedule*
24590-LAW-J3-LOP-00001	*Logic Diagram - Melter 1 SBS Purge Pumps, PMP-00003A & B and Discharge Valves YV-1033 & 1026*
24590-LAW-J3-LOP-00002	*Logic Diagram - Melter 1 SBS Cond Purge Pumps, PMP-00001 & 2 and Priming Valves YV-1090 & 1091*
24590-LAW-J3-LOP-00003	*Logic Diagram - Melter 1 SBS Condensate Purge Pumps Outlet Valves YV-1035, 1036, 1037 & 1054*
24590-LAW-J3-LOP-00004	*Logic Diagram - Melter 1 WESP Process Air & Demin Water Valves, WESP Wash Sequence and Power Supply Unit*
24590-LAW-J3-LOP-00005	*Logic Diagram - Melter 1 SBS Chilled Water & Offgas Inlet and Vent Valves*
24590-LAW-J3-LOP-00006	*Logic Diagram - Melter 1 SBS Level and Film Coolers' Outlet Temperature Inputs*
24590-LAW-J3-LOP-00007	*Logic Diagram - Melter 1 Film Coolers Service Air Valve YV-1225 & Wash Water Header Valves YV-1219*
24590-LAW-J3-LOP-00008	*Logic Diagram - Melter 1 Film Cooler 2 Service Air & Wash Water Valves YV-1217, 1222, 1223 & 1227*
24590-LAW-J3-LOP-00009	*Logic Diagram - Melter 1 Film Cooler 1 Service Air & Wash Water Valves YV-1117, 1122, 1123 & 1127*
24590-LAW-J3-LOP-00010	*Logic Diagram - Melter 2 SBS Purge Pumps, PMP-00006A & B and Discharge Valves YV-2033 & 2026*
24590-LAW-J3-LOP-00011	*Logic Diagram - Melter 2 SBS Cond Purge Pumps, PMP-00004 & 5 and Priming Valves YV-2090 & 2091*
24590-LAW-J3-LOP-00012	*Logic Diagram - Melter 2 SBS Condensate Purge Pumps Outlet Valves YV-2035, 2036, 2037 & 2054*
24590-LAW-J3-LOP-00013	*Logic Diagram - Melter 2 WESP Process Air & Demin Water Valves and Power Supply Unit*
24590-LAW-J3-LOP-00014	*Logic Diagram - Melter 2 SBS Chilled Water & Offgas Inlet and Vent Valves*
24590-LAW-J3-LOP-00015	*Logic Diagram - Melter 2 SBS Level and Film Coolers' Outlet Temperature Inputs*
24590-LAW-J3-LOP-00016	*Logic Diagram - Melter 2 Film Coolers Service Air Valve YV-2225 & Wash Water Header Valves YV-2219*
24590-LAW-J3-LOP-00017	*Logic Diagram - Melter 2 Film Cooler 4 Service Air & Wash Water Valves YV-2217, 2222, 2223 & 2227*
24590-LAW-J3-LOP-00018	*Logic Diagram - Melter 2 Film Cooler 3 Service Air & Wash Water Valves YV-2217, 2122, 2123 & 2127*
24590-LAW-J3-LOP-01001	*Logic Diagram - Melter 1 Submerged Bed Scrubber Instrumentation*
24590-LAW-J3-LOP-01002	*Logic Diagram - Melter 1 Submerged Bed Scrubber Condensate Vessel Instrumentation*
24590-LAW-J3-LOP-01003	*Logic Diagram Melter 1 Wet Electrostatic Precipitator Instrumentation*
24590-LAW-J3-LOP-01004	*Functional Diagram - Melter 1 Film Cooler Instrumentation*

Document Number	Title
24590-LAW-J3-LOP-01005	*Functional Diagram - Melter 2 Submerged Bed Scrubber Instrumentation*
24590-LAW-J3-LOP-01006	*Logic Diagram - Melter 2 Submerged Bed Scrubber Condensate Vessel Instrumentation*
24590-LAW-J3-LOP-01007	*Logic Diagram - Melter 2 Wet Electrostatic Precipitator Instrumentation*
24590-LAW-J3-LOP-01008	*Functional Diagram - Melter 2 Film Cooler Instrumentation*
24590-LAW-J3-LOP-01009	*Functional Diagram - Melter 1 SBS and WESP Level Instruments*
24590-LAW-J3-LOP-01010	*Functional Diagram - Melter 2 SBS and WESP Level Instruments*
24590-LAW-J3-LOP-90001	*Logic Diagram - LAW-T02F01C01 Melter 1 WESP High Level Interlock*
24590-LAW-J3-LOP-90002	*Logic Diagram - LAW-T02F01C02 Melter 2 WESP High Level Interlock*
24590-LAW-J3-LOP-90003	*Logic Diagram - LAW-T03F01C01 Melter 1 SBS High Level Interlock*
24590-LAW-J3-LOP-90004	*Logic Diagram - LAW-T03F01C02 Melter 2 SBS High Level Interlock*
24590-LAW-J3-LOP-90005	*Logic Diagram - LAW-T03F02C01 Melter 1 SBS Low Level Interlock*
24590-LAW-J3-LOP-90006	*Logic Diagram - LAW-T03F02C02 Melter 2 SBS Low Level Interlock*
24590-LAW-J3-LOP-90007	*Logic Diagram - LAW-T18F01C01 Melter 1 Primary Film Cooler Outlet High Temperature Interlock*
24590-LAW-J3-LOP-90008	*Logic Diagram - LAW-T18F01C02 Melter 1 Standby Film Cooler Outlet High Temperature Interlock*
24590-LAW-J3-LOP-90009	*Logic Diagram - LAW-T18F01C03 Melter 2 Primary Film Cooler Outlet High Temperature Interlock*
24590-LAW-J3-LOP-90010	*Logic Diagram - LAW-T18F01C04 Melter 2 Standby Film Cooler Outlet High Temperature Interlock*
24590-LAW-J3-LOP-90011	*Logic Diagram - LOP Valves Stroke Test*
24590-LAW-J3-LOP-91001	*Logic Diagram - LAW SIF LOP Final Elements Sheet 1*
24590-LAW-J3-LOP-91002	*Logic Diagram - LAW SIF LOP Final Elements Sheet 2*
24590-LAW-J3-LOP-91003	*Logic Diagram - LAW SIF LOP Final Elements Sheet 3*
24590-LAW-M5-V17T-00004	*Process Flow Diagram LAW Vitrification Melter 1 (System LMP & LOP)*
24590-LAW-M5-V17T-00005	*Process Flow Diagram LAW Vitrification Melter 2 (System LMP & LOP)*
24590-LAW-M5-V17T-00007	*Process Flow Diagram Melter 1 Primary Offgas Treatment System (System LOP)*
24590-LAW-M5-V17T-00008	*Process Flow Diagram Melter 2 Primary Offgas Treatment System (System LOP)*
24590-LAW-M5-V17T-00010	*Process Flow Diagram LAW Vitrification Ammonia & Secondary Offgas (System AMR & LVP)*
24590-LAW-M5-V17T-00011	*Process Flow Diagram LAW Vit Secondary Offgas Treatment (System LVP)*
24590-LAW-M6C-ARV-00001	*ARV System Sizing Calculation for Lab and LAW*
24590-LAW-M6C-CHW-00001	*LAW Facility Chilled Water System Distribution Pipe Sizing*
24590-LAW-M6C-ISA-00001	*LAW Instrument Service Air System Sizing*
24590-LAW-M6C-LOP-00001	*Overflow Drain Line Sizing for LOP-SCB-00001 & LOP-SCB-00002*
24590-LAW-M6C-LOP-00004	*Line Sizing for Film Coolers*
24590-LAW-M6C-LOP-00006	*Overflow Sizing for Scrubbers LOP-SCB-00001&2*
24590-LAW-M6C-LOP-00007	*LAW Film Cooler Emergency Air In-Bleed Line Pressure Drop*

Document Number	Title
24590-LAW-M6C-LOP-00008	*Code Case 2211-1 Overpressure Protection Evaluation of the LAW Primary Off-Gas (LOP) System*
24590-LAW-M6C-LPS-00001	*Line Sizing and Desuperheater Rating Calculation for Low Pressure Steam*
24590-LAW-M6C-LVP-00003	*Pipe Sizes for LAW LVP Systems*
24590-LAW-M6C-LVP-00004	*Offgas Pipe and Exhauster Sizing for LOP and LVP Systems*
24590-LAW-M6C-LVP-00006	*Code Case UG-140 Overpressure Protection Evaluation of the LAW Secondary Off-Gas (LVP) Systems*
24590-LAW-M6C-LVP-00008	*Set Pressure and Specifications of Rupture Disk PSE-0148 for the LVP Off-Gas System*
24590-LAW-M6C-RLD-00006	*SBS Condensate Collection Vessel Sizing (RLD-VSL-00005)*
24590-LAW-M6C-RLD-00015	*RLD-VSL-00004 Overflow Sizing*
24590-LAW-M6C-SCW-00001	*Line Sizing and System Requirement Calculation for LAW Steam Condensate Water System*
24590-LAW-M6-LOP-00001001	*P&ID - LAW - LAW Primary Offgas Process System Melter 1 LOP-SCB-00001*
24590-LAW-M6-LOP-00001002	*P&ID - LAW - LAW Primary Offgas Process System Melter 1 LOP-VSL-00001*
24590-LAW-M6-LOP-00001003	*P&ID - LAW - LAW Primary Offgas Process System Melter 1 LOP-BULGE-00001*
24590-LAW-M6-LOP-00001004	*P&ID - LAW - LAW Primary Offgas Process System Melter 1 LOP-WESP-00001*
24590-LAW-M6-LOP-00001005	*P&ID - LAW - LAW Primary Offgas Process System Melter 1 Film Cooler Offgas*
24590-LAW-M6-LOP-00001006	*P&ID - LAW - LAW Primary Offgas Process System Melter 1 LOP-PMP-00003A/B*
24590-LAW-M6-LOP-00002001	*P&ID - LAW - LAW Primary Offgas Process System Melter 2 LOP-SCB-00002*
24590-LAW-M6-LOP-00002002	*P&ID - LAW - LAW Primary Offgas Process System Melter 2 LOP-VSL-00002*
24590-LAW-M6-LOP-00002003	*P&ID- LAW - LAW Primary Offgas Process System Melter 1 LOP-BULGE-00002*
24590-LAW-M6-LOP-00002004	*P&ID - LAW - LAW Primary Offgas Process System Melter 2 LOP-WESP-00002*
24590-LAW-M6-LOP-00002005	*P&ID - LAW - LAW Primary Offgas Process System Melter 2 Film Cooler Offgas*
24590-LAW-M6-LOP-00002006	*P&ID - LAW - LAW Primary Offgas Process System Melter 2 LOP-PMP-00006A/B*
24590-LAW-M6-LOP-00004001	*P&ID - LAW - LAW Primary Offgas Process System Melter 1 LOP-FCLR-00002*
24590-LAW-M6-LOP-00004002	*P&ID - LAW - LAW Primary Offgas Process System Melter 1 LOP- FCLR - 00001*
24590-LAW-M6-LOP-00005001	*P&ID - LAW - LAW Primary Offgas Process System Melter 2 LOP- FCLR - 00004*

Document Number	Title
24590-LAW-M6-LOP-00005002	*P&ID - LAW - LAW Primary Offgas Process System Melter 2 LOP- FCLR - 00003*
24590-LAW-M6-LVP-00001001	*P&ID - LAW - LAW Secondary Offgas/Vessel Vent Process System Combined Header*
24590-LAW-M6-LVP-00001002	*P&ID - LAW - LAW Secondary Offgas/Vessel Vent Process System HEPA Preheaters*
24590-LAW-M6-LVP-00001003	*P&ID - LAW - LAW Secondary Offgas/Vessel Vent Process System HEPA Filters*
24590-LAW-M6-LVP-00001004	*P&ID - LAW - LAW Secondary Offgas/Vessel Vent Process System Offgas Exhausters LVP-EXHR-00001A*
24590-LAW-M6-LVP-00001005	*P&ID - LAW - LAW Secondary Offgas/Vessel Vent Process System Offgas Exhausters LVP- EXHR -00001B*
24590-LAW-M6-LVP-00001006	*P&ID - LAW - LAW Secondary Offgas/Vessel Vent Process System Offgas Exhausters LVP- EXHR -00001C*
24590-LAW-M6-LVP-00002001	*P&ID - LAW - LAW Secondary Offgas/Vessel Vent Process System Caustic Scrubber Bypass*
24590-LAW-M6-LVP-00002002	*P&ID - LAW - LAW Secondary Offgas/Vessel Vent Process System Caustic Scrubber LVP-SCB-00001*
24590-LAW-M6-LVP-00002003	*P&ID - LAW - LAW Secondary Offgas/Vessel Vent Process System Caustic Collection Tank LVP-TK-00001*
24590-LAW-M6-LVP-00002004	*P&ID - LAW - LAW Secondary Offgas/Vessel Vent Process System Scrubber Recirculation Loop LVP-PMP-00003A/3B*
24590-LAW-M6-LVP-00002005	*P&ID - LAW - LAW Secondary Offgas/Vessel Vent Process System Transfer Pumps LVP-PMP-00002A/B*
24590-LAW-M6-LVP-00002006	*P&ID - LAW - LAW Secondary Offgas/Vessel Vent Process System Stack Discharge Monitoring System*
24590-LAW-M6-LVP-00002007	*P&ID - LAW - LAW Secondary Offgas Vessel Vent Process System Stack Discharge Monitoring System*
24590-LAW-M6-LVP-00003001	*P&ID - LAW - LAW Secondary Offgas/Vessel Vent Process System Equipment Vents*
24590-LAW-M6-LVP-00004001	*P&ID - LAW - LAW Secondary Offgas/Vessel Vent Process System Mercury Mitigation Equipment Bypass*
24590-LAW-M6-LVP-00004002	*P&ID - LAW - LAW Secondary Offgas/Vessel Vent Process System Mercury Mitigation Equipment LVP-SKID-00001*
24590-LAW-M6-LVP-00004003	*P&ID - LAW - LAW Secondary Offgas/Vessel Vent Process System Mercury Mitigation Equipment LVP-ADBR-00001A/B*
24590-LAW-M6-LVP-00005001	*P&ID - LAW - LAW Secondary Offgas/Vessel Vent Process System Ammonia Dilution Skid*
24590-LAW-M6-LVP-00005002	*P&ID - LAW - LAW Secondary Offgas/Vessel Vent Process System SCO/SCR Skid*
24590-LAW-MEC-LVP-00003	*Design Pressure and Design Temperature Calculation for LVP System*
24590-LAW-MKC-LOP-00005	*LAW Wet Electrostatic Precipitators (WESP) Operating Conditions and Process Design Requirements*
24590-LAW-MVC-LVP-00001	*Sizing Calculation for Caustic Collection Tank LVP-TK-00001*

Document Number	Title
24590-LAW-PISW-J-08-0021-01	*System Design Document for LAW Primary Offgas Process (LOP) System*
24590-LAW-PISW-J-08-0021-03	*LAW LOP System Software Acceptance Test*
24590-LAW-PISW-J-08-0021-04	*LAW LOP System Software Acceptance Test Report*
24590-LAW-PISW-J-08-0021-05	*LAW LOP System Software Acceptance Test Report*
24590-LAW-RPT-ENG-02-001	*WDOH Code Compliance Matrix for LAW HVAC Systems*
24590-LAW-U3C-PPJ-00002	*PFD Calculation for LAW Wet Electrostatic Precipitator High Level Interlocks*
24590-QL-POA-JA03-00006-08-00001	*Drawing – COX Analyzer P&ID LVP-AT-0425*
24590-QL-POA-JA03-00006-08-00002	*Drawing – COX Analyzer P&ID LVP-AT-0424*
24590-QL-POA-JA03-00006-08-00003	*Drawing – COX Analyzer P&ID LVP-AT-0406*
24590-QL-POA-JA03-00006-08-00004	*Drawing – COX Analyzer P&ID LVP-AT-0405*
24590-QL-POA-MKAS-00001-01-03	*Calculation - ASME Code - Submerged Bed Scrubber, Flue or Off-Gas LAW Vessels with Internal Coils and External Half Pipe Jacket*
24590-QL-POA-MKAS-00001-01-16	*Calculation - Submerged Bed Scrubber Flue or Off-Gas LAW, Weight / Seismic / Nozzle Load / Lifting Calculations*
24590-QL-POA-MKAS-00001-01-17	*Calculation - Submerged Bed Scrubber Flue or Off-Gas LAW, Weight / Seismic / Nozzle Load /Lifting Calculations*
24590-QL-POA-MKAS-00001-01-18	*Calculation - Submerged Bed Scrubber Flue or Off-Gas LAW, Weight / Seismic / Nozzle Load / Lifting Calculations*
24590-QL-POA-MKAS-00003-06-00001	*Calculation - LAW Melter Offgas Caustic Scrubber Process*
24590-QL-POA-MKAS-00003-07-00005	*Report - LAW Caustic Scrubber ASME Code Calculation*
24590-QL-POA-MKE0-00001-06-00049	*Drawing – P&ID LAW WESP LOP WESP-00002*
24590-QL-POA-MKE0-00001-06-33	*Drawing – P&ID LAW WESP LOP WESP-00001*
24590-QL-POA-MKE0-00001-07-01	*Calculations - LAW-2 WESP Pressure Vessel Design Calculations*
24590-QL-POA-MKE0-00001-07-02	*Calculations - LAW-1 WESP Pressure Vessel Design Calculations*
24590-QL-POA-MKE0-00001-07-03	*Calculations - LAW WESP Pressure Vessel Skirt Design Calculations*
24590-QL-POA-MKE0-00001-13-01	*Design and Analysis Report - DMP-4145-LAW-DDR-001*
24590-QL-POA-MKH0-00001-18-00004	*Calculation - Structural Analysis of Flanders/CSC LVP HEPA Filter Unit*
24590-QL-POA-MKH0-00001-18-00005	*Calculation - Structural Analysis of Flanders/CSC LVP HEPA Filter Unit*
24590-QL-POB-MVA0-00002-03-01	*Calculation - LAW - Code Design for Melter 1 SBS Condensate Vessel*
24590-QL-POB-MVA0-00002-03-02	*Calculation - LAW - Code Design for Melter 2 SBS Condensate Vessel*
24590-QL-POB-MVA0-00002-03-09	*Calculations - LAW - Nozzle External Loading for Melter 1 SBS Condensate Vessel*
24590-QL-POB-MVA0-00002-03-10	*Calculations - LAW - Nozzle External Loading for Melter 2 SBS Condensate Vessel*
24590-RMCD-02782	*Calculation - Structural Analysis of Flanders/CSC LVP HEPA Filter Unit*
24590-RMCD-02877	*Calculation - Structural Analysis of Flanders/CSC LVP HEPA Filter Unit*
24590-WTP-GPP-SIND-068	*Heat and Cold Stress Prevention*
24590-WTP-M6C-DOW-00001	*WDOH Domestic Water Dynamic Flow Analysis*

Document Number	Title
24590-WTP-PISW-J-08-0001-04	*WTP Developed Software Objects Test Plan*
24590-WTP-RPT-HV-02-001	*WTP Cost Benefit Analysis for C2 and C3 HVAC Systems*
CALC-W375LV-PR00022	*System 234 LAW Vessel Ventilation Calculation*
CCN 026829	*Federal Acquisition Regulation 52.243-7 Notification of Changes (Apr 1984)*
CCN 028405	*Operations and Maintenance Area Temperature Control Design Change*
CCN 033590	*HVAC BOD - 100 fpm Containment Velocity*
CCN 036692	*Emissions Report and Process Engineering Design Calculations*
CCN 116112	*Ventilation Exhaust Stack Design Data (Augmented)*

Appendix A Test Objectives, Conditions, and Acceptance Criteria

Note: The testing activities included in this appendix are limited to those identified as needing to be performed by Startup or Commissioning to support the verification of requirements in Section 3. This appendix does not restrict Startup or Commissioning from performing other routine system functional testing or grooming.

Requirement (para #)	Plan (including SSCs)	Acceptance Criteria (test acceptance criteria (TAC) or general test criteria (GTC))*	Notes/Comments	Test Conditions
3.4.2.4	Verify the system NO_x emissions are within Air Permit limits.	**(GTC)** NO_x emissions do not exceed 477 ppmdv at 21% O2 averaged over 24 consecutive hours or 200.1 pounds per day averaged over 30 consecutive days.	In accordance with Ecology approved test plan.	Offgas system operational. Melters processing simulated waste.
3.4.2.5	Verify the system PM or PM10 emissions are within Air Permit limits.	**(GTC)**PM or PM_{10} emissions do not exceed 0.36 pounds per hour at 21% O2 when averaged over 24 consecutive hours.	In accordance with Ecology approved test plan.	Offgas system operational. Melters processing simulated waste.
3.4.2.6	Verify the system Particulate Matter emissions comply with WTP Dangerous Waste Permit requirements.	**(GTC)** Particulate matter emissions do not exceed 34 mg/dscm (0.015 grams/dscf).	In accordance with Ecology approved test plan.	Offgas system operational. Melters processing simulated waste.
3.4.2.7	Verify the system hydrochloric acid and chlorine gas emissions comply with WTP DWP requirements.	**(GTC)**The combined hydrochloric acid and chlorine gas emissions do not exceed 21 ppmv.	In accordance with Ecology approved test plan.	Offgas system operational. Melters processing simulated waste.
3.4.2.8	Verify the system dioxin and furan emissions comply with WTP DWP requirements.	**(GTC)**Dioxin and furan TEQ emissions, individually, do not exceed 0.2 nanograms/dcsm.	In accordance with Ecology approved test plan.	Offgas system operational. Melters processing simulated waste.
3.4.2.9	Verify the system mercury emissions comply with WTP DWP requirements.	**(GTC)**Mercury emissions do not exceed 45 µg/dscm.	In accordance with Ecology approved test plan.	Offgas system operational. Melters processing simulated waste.
3.4.2.10	Verify the system lead and cadmium emissions comply with WTP DWP requirements.	**(GTC)**The combined lead and cadmium emissions do not exceed 120 µg/dscm.	In accordance with Ecology approved test plan.	Offgas system operational. Melters processing simulated waste.
3.4.2.11	Verify the system arsenic, beryllium, and chromium emissions comply with WTP DWP requirements.	**(GTC)**The combined arsenic, beryllium, and chromium emissions do not exceed 97 µg/dscm.	In accordance with Ecology approved test plan.	Offgas system operational. Melters processing simulated waste.
3.4.2.12	Verify the system carbon monoxide emissions comply with WTP Dangerous Waste Permit requirements.	**(GTC)**Carbon monoxide emissions do not exceed 100 ppm by volume, over an hourly rolling average, dry basis.	Carbon monoxide emissions to be measured and recorded by a continuous monitoring system over an hourly rolling average. In accordance with Ecology approved test plan.	Offgas system operational. Melters processing simulated waste.
3.4.2.13	Verify the system hydrocarbon emissions comply with WTP Dangerous Waste Permit requirements.	**(GTC)**Hydrocarbon emissions do not exceed 10 ppm by volume, over an hourly rolling average, dry basis, and reported as propane.	Hydrocarbon emissions to be measured and recorded by a continuous monitoring system over an hourly rolling average. In accordance with Ecology approved test plan.	Offgas system operational. Melters processing simulated waste.

Requirement (para #)	Plan (including SSCs)	Acceptance Criteria (test acceptance criteria (TAC) or general test criteria (GTC))*	Notes/Comments	Test Conditions
3.4.2.14	Verify the system organic dangerous constituents emissions comply with WTP Dangerous Waste Permit requirements. .	**(GTC)**Achieve destruction and removal efficiency (DRE) of 99.99 % for the principal organic dangerous constituents.	Organic emissions to be calculated in accordance with the formula in the WTP Dangerous Waste Permit. In accordance with Ecology approved test plan.	Offgas system operational. Melters processing simulated waste.
3.4.2.26	Test to verify the vacuum breaker maintains offgas header pressure between -60 in WG and -67 in WG, measured at a location between the caustic scrubber and the exhauster suction, with the offgas system in the reconfiguration line-up. The test shall confirm acceptable pressure for one, two and three online fan configurations (at reconfiguration speed). **CTNs:** LVP-VACB-00001 LVP-VACB-00002	**(TAC)** Exhauster suction pressure is maintained between -60 in. W.G. and -67 in. W.G. and the vacuum breaker has a flow capacity of at least 4275 scfm	Per 24590-LAW-DSA-NS-18-0001 Section 4.4.3.16.4 and Appendix D of 24590-LAW-M6C-LVP-00004, 4275 SCFM occurs with a 1 melter and 3 exhauster configuration and represents the combined total of the breakers.	
3.5.2.6	Test to verify the melter special relief device lifts s at ≤ 10 in. W.G. and relieve rated flow at ≤ 13 in. W.G. **CTNs:** LOP-SP-00003 LOP-SP-00008	**(TAC)** The melter special relief device lifts s at ≤ 10 in. W.G. and relieves rated flow at ≤ 13 in. W.G.		
3.8.2.1	Test the offgas exhauster to verify sufficient motive force to exhaust the melter offgas out the top of the stack under minimum operating flow. **CTNs:** LVP-EXHR-00001A LVP-EXHR-00001B LVP-EXHR-00001C	**(TAC)** Minimum exhauster specification under normal operation modes 2 Melters, 2 Exhausters: dP 110.8 in. W.C. @ 1559scfm 1 Melters, 1 Exhausters: dP 103.4 in. W.C. @ 2063scfm	Operating conditions defined in 24590-LAW-M6C-LVP-00004, rev 2	Test under all normal melter operating conditions with simulated melter feed. LMP, LOP, LVP are operational
3.8.2.7	Test that the backup air supply of 7.4 ft^3 for the exhauster shaft seals will maintain confinement for the duration for the substantial cold cap burn off. **CTNs:** LVP-EXHR-00001A LVP-EXHR-00001B LVP-EXHR-00001C	**(TAC)** After 2 hours of cold cap burn off, the pressure at the exhauster shaft seals air supply is less than the analytical limit of 90 psig	Per calculation 24590-LAW-M6C-LVP-00025 Rev. 0B, backup volumes greater than 7.4 ft^3 may be used, but will decrease the analytical limit. However, a decrease in the analytical limit adds margin to the system by increasing the duration that the backup volume can supply seal air.	LVP is operational
3.8.2.8	Test that the surge capacity of 0.2 ft^3 for the backup air supply will maintain the shaft seal supply pressure. **CTNs:** LVP-EXHR-00001A LVP-EXHR-00001B LVP-EXHR-00001C	**(TAC)** The pressure at the exhauster shaft seals is greater than the analytical limit of 35.7 psig	Per calculation 24590-LAW-M6C-LVP-00025 Rev. 0B, surge volumes greater than 0.2 ft^3 may be used, but will decrease the analytical limit. However, a decrease in the analytical limit adds margin to the system by increasing the time it takes to lose seal air pressure.	LVP is operational
3.9.2.2.1	Test to verify interlock opens the valve on the in-bleed assembly and opens the associated bypass valve from the standby film cooler to the SBS upon detection of low air flow in the primary or standby film cooler outlets. **CTNs:** LOP-FT-1408 LOP-FT-1409	**(TAC)** Prevent offgas piping (from film cooler through the SBS downcomer) temperatures from exceeding 1112 °F. When the sensor measures a flow below setpoint (see 24590-LAW-J3C-PPJ-00018) at a film cooler, the PPJ opens air inbleed valves to provide additional air cooling to that melter and opens the associated bypass valve from the standby film cooler to the SBS.	Air in bleed is process air from the WPC. The setpoint calculation (24590-LAW-J3C-PPJ-00018) protects the analytical limit to account for instrument uncertainties, resulting in a limiting trip setpoint (LTSP) to activate the interlock to	PPJ operational. Signal may be simulated.

Requirement (para #)	Plan (including SSCs)	Acceptance Criteria (test acceptance criteria (TAC) or general test criteria (GTC))*	Notes/Comments	Test Conditions
	LOP-FT-1410 LOP-FT-1411 LOP-FT-2408 LOP-FT-2409 LOP-FT-2410 LOP-FT-2411 LOP-YV-1401 LOP-YV-1407 LOP-YV-1402 LOP-YV-1406 LOP-YV-2401 LOP-YV-2407 LOP-YV-2402 LOP-YV-2406 LOP-YV-1008 LOP-YV-2008		open air inbleed valves to the affected film coolers at 147.3 ACFM (primary cooler) and 7.5 ACFM (standby cooler) prevent offgas piping temperatures from exceeding 1112 °F. References: 24590-LAW-J0X-J41T-00001, *LAW Facility Safety Instrumented Function Trip Setpoint Index* <u>Melter 1 Primary Film Cooler</u> 24590-LAW-M6-LOP-00001005, *P&ID - LAW - LAW Primary Offgas Process System Melter 1 Film Cooler Offgas* 24590-LAW-M6-LOP-00004002, *P&ID - LAW - LAW Primary Offgas Process System Melter 1 LOP-FCLR-00001* 24590-LAW-J3-LOP-90007, *Logic Diagram - LAW-T18F01C01 Melter 1 Primary Film Cooler Outlet High Temperature Interlock* <u>Melter 1 Standby Film Cooler</u> 24590-LAW-M6-LOP-00001005, *P&ID - LAW - LAW Primary Offgas Process System Melter 1 Film Cooler Offgas* 24590-LAW-M6-LOP-00004001, *P&ID - LAW - LAW Primary Offgas Process System Melter 1 LOP-FCLR-00002* 24590-LAW-J3-LOP-90008, *Logic Diagram - LAW-T18F01C02 Melter 1 Standby Film Cooler Outlet High Temperature Interlock* <u>Melter 2 Primary Film Cooler</u> 24590-LAW-M6-LOP-00002005, *P&ID - LAW - LAW Primary Offgas Process System Melter 2 Film Cooler Offgas* 24590-LAW-M6-LOP-00005002, *P&ID - LAW - LAW Primary Offgas Process System Melter 2 LOP-FCLR-00003* 24590-LAW-J3-LOP-90009, *Logic Diagram - LAW-T18F01C03 Melter 2 Primary Film Cooler Outlet High Temperature Interlock* <u>Melter 2 Secondary Film Cooler</u> 24590-LAW-M6-LOP-00002005, *P&ID - LAW - LAW Primary Offgas Process System Melter 2 Film Cooler Offgas*	

Requirement (para #)	Plan (including SSCs)	Acceptance Criteria (test acceptance criteria (TAC) or general test criteria (GTC))*	Notes/Comments	Test Conditions
			24590-LAW-M6-LOP-00005001, *P&ID - LAW - LAW Primary Offgas Process System Melter 2 LOP-FCLR-00004* 24590-LAW-J3-LOP-90010, *Logic Diagram - LAW-T18F01C04 Melter 2 Standby Film Cooler Outlet High Temperature Interlock*	
3.9.2.2.1.1	Test to verify the failure position on loss (or simulated loss) of control signal or air to the valve (s): • melter standby film cooler isolation valve - fails in an OPEN position • melter 1 and 2 primary film cooler emergency air inbleed valves - fail in an OPEN position • melter standby film cooler emergency air inbleed valves - fail in an OPEN position **CTNs** **Melter 1:** LOP-YV-1008 LOP-YV-1401 LOP-YV-1407 LOP-YV-1402 LOP-YV-1406 **Melter 2:** LOP-YV-2008 LOP-YV-2401 LOP-YV-2407 LOP-YV-2402 LOP-YV-2406	**(TAC)** Failed primary/standby film coolers low flow interlocked components fail safe position on loss of control signal or air		
3.9.2.2.2	Test to verify the interlock closes the demineralized water flush valve upon detection of WESP high liquid level. **CTNs** LOP-LT-1059 melter 1 WESP level transmitter LOP-YV-1061 melter 1 WESP water addition valve LOP-LT-2059 melter 2 WESP level transmitter LOP-YV-2061 melter 2 WESP water addition valve	**(TAC)** On PPJ detection of WESP high liquid level (<18.5 inches above the bottom head-to-vessel weld line), the DIW flush valve to the WESP is closed by the PPJ.	References: PPJ trip setpoint: 24590-LAW-J0X-J41T-00001, LAW Facility Safety Instrumented Function Trip Setpoint Index Melter 1 WESP 24590-LAW-M6-LOP-00001004, P&ID - LAW - LAW Primary Offgas Process System Melter 1 LOP-WESP-00001 24590-LAW-J3-LOP-90001, Logic Diagram - LAW-T02F01C01 Melter 1 WESP High Level Interlock Melter 2 WESP 24590-LAW-M6-LOP-00002004, P&ID - LAW - LAW Primary Offgas Process System Melter 2 LOP-WESP-00002 24590-LAW-J3-LOP-90002, Logic Diagram - LAW-T02F01C02 Melter 2 WESP High Level Interlock	DIW and PPJ systems operating.

Requirement (para #)	Plan (including SSCs)	Acceptance Criteria (test acceptance criteria (TAC) or general test criteria (GTC))*	Notes/Comments	Test Conditions
			24590-LAW-J3C-PPJ-00002, Rev. B, states in Section 2.6.7, the lowest measured level (0 inches) corresponds to 5.5625 inches above the bottom WESP head-to-vessel weld line. 18.5 inches above the bottom head-to-vessel weld line is considered the Design Limit in the calculation. The difference is 12.93 inches.	
3.9.2.2.2.1	Test to verify the failure position on loss (or simulated loss) of control signal or air to the valve (s): • WESP water addition supply valve - fails in a CLOSED position **CTNs** **Melter 1:** LOP-YV-1061 **Melter 2:** LOP-YV-2061	**(TAC)** Failed WESP high level interlocked components fail safe position on loss of control signal or air		
3.9.2.2.3.1	Test to verify that upon detection of a high SBS level, the safety interlock closes the DIW isolation valves to the associated melter valve bulge, and closes DIW isolation valves to associated SBS condensate purge pump priming lines. CTNs LOP-LT-1011 LOP-YV-1148 (melter 1 DIW to bulge) LOP-YV-1156 LOP-YV-1157 LFP-YV-1207 LFP-YV-1211 LOP-LT-2011 LOP-YV-2148 (melter 2 DIW to bulge) LOP-YV-2156 LOP-YV-2157 LFP-YV-2207 LFP-YV-2211	**(TAC)** Upon SBS high level (<34.94 inches above the discharge of the downcomer (69.94 inches above the vessel tangent line)) signal through the PPJ, DIW to the associated process cell bulge and to the associated SBS condensate purge pump priming lines is isolated.	LOP-LT-1011 and LOP-LT-2011 perform safety functions. The indications are displayed by the PCJ system. Shutting demineralized water and plant service air supply to the melter feed pumps terminates feed to the melter. References: <u>Melter1 SBS High Level</u> 24590-LAW-M6-LOP-00001001, *P&ID - LAW - LAW Primary Offgas Process System Melter 1 LOP-SCB-00001* 24590-LAW-M6-LOP-00001002, *P&ID - LAW - LAW Primary Offgas Process System Melter 1 LOP-VSL-00001* 24590-LAW-M6-LOP-00001003, *P&ID - LAW - LAW Primary Offgas Process System Melter 1 LOP-BULGE-00001* 24590-LAW-M6N-LOP-00067, *Addition of Safety Valves to LOP System for DIW Supply Shutoff* 24590-LAW-J3-LOP-90003, *Logic Diagram - LAW-T03F01C01 Melter 1 SBS High Level Interlock* <u>Melter 2 SBS High Level</u> 24590-LAW-M6-LOP-00002001, *P&ID - LAW - LAW Primary Offgas Process System Melter 2 LOP-SCB-00002*	DIW and PPJ systems operating.

Requirement (para #)	Plan (including SSCs)	Acceptance Criteria (test acceptance criteria (TAC) or general test criteria (GTC))*	Notes/Comments	Test Conditions
			24590-LAW-M6-LOP-00002002, *P&ID - LAW - LAW Primary Offgas Process System Melter 2 LOP-VSL-00002* 24590-LAW-M6-LOP-00002003, *P&ID- LAW - LAW Primary Offgas Process System Melter 1 LOP-BULGE-00002* (**Note:** Unofficial redline drawings show change in this title to melter 2, but it is still listed on iDocSearch as melter 1.) 24590-LAW-J3-LOP-90004, *Logic Diagram - LAW-T03F01C02 Melter 2 SBS High Level Interlock*	
3.9.2.2.3.2	Test to verify that upon detection of a high SBS level, the safety interlock closes the feed pump plant air supply valve. **CTNs** LOP-LT-1011 LFP-YV-1208 LFP-YV-1212 LOP-LT-2011 LFP-YV-2208 LFP-YV-2212	**(TAC)** Upon SBS high level (<34.94 inches above the discharge of the downcomer (69.94 inches above the vessel tangent line)) signal through the PPJ, feed pump plant air supply valve is isolated.	LOP-LT-1011 and LOP-LT-2011 perform safety functions. The indications are displayed by the PCJ system. Shutting demineralized water and plant service air supply to the melter feed pumps terminates feed to the melter. References: <u>Melter1 SBS High Level</u> 24590-LAW-M6-LOP-00001001, *P&ID - LAW - LAW Primary Offgas Process System Melter 1 LOP-SCB-00001* 24590-LAW-M6-LOP-00001002, *P&ID - LAW - LAW Primary Offgas Process System Melter 1 LOP-VSL-00001* 24590-LAW-M6-LOP-00001003, *P&ID - LAW - LAW Primary Offgas Process System Melter 1 LOP-BULGE-00001* 24590-LAW-M6N-LOP-00067, *Addition of Safety Valves to LOP System for DIW Supply Shutoff* 24590-LAW-J3-LOP-90003, *Logic Diagram - LAW-T03F01C01 Melter 1 SBS High Level Interlock* <u>Melter 2 SBS High Level</u> 24590-LAW-M6-LOP-00002001, *P&ID - LAW - LAW Primary Offgas Process System Melter 2 LOP-SCB-00002* 24590-LAW-M6-LOP-00002002, *P&ID - LAW - LAW Primary Offgas Process System Melter 2 LOP-VSL-00002*	PPJ systems operating.

Requirement (para #)	Plan (including SSCs)	Acceptance Criteria (test acceptance criteria (TAC) or general test criteria (GTC))*	Notes/Comments	Test Conditions
			24590-LAW-M6-LOP-00002003, *P&ID- LAW - LAW Primary Offgas Process System Melter 1 LOP-BULGE-00002* (**Note:** Unofficial redline drawings show change in this title to melter 2, but it is still listed on iDocSearch as melter 1.) 24590-LAW-J3-LOP-90004, *Logic Diagram - LAW-T03F01C02 Melter 2 SBS High Level Interlock*	
3.9.2.2.3.3	Test to verify the failure position on loss (or simulated loss) of control signal or air to the valve (s): • melter SBS condensate bulge flush supply valve - fails in a CLOSED position • melter SBS condensate recirculation pump priming valves - fail in a CLOSED position **CTNs** **Melter 1:** LOP-YV-1148 LOP-YV-1156 LOP-YV-1157 **Melter 2:** LOP-YV-2148 LOP-YV-2156 LOP-YV-2157	**(TAC)** Failed SBS high level interlocked components fail safe position on loss of control signal or air		
3.9.2.2.4.1	Test to verify that upon detection of a low SBS level, the safety interlock closes PSA isolation valves to the melter feed pumps. CTNs LOP-LT-1011 LFP-YV-1212 LFP-YV-1208 LOP-LT-2011 LFP-YV-2212 LFP-YV-2208	**(TAC)** Upon SBS low level (≥ 24.6.4 inches above the discharge of the downcomer (59.64 inches above the vessel tangent)) signal through the PPJ, PSA supply to melter feed pumps is terminated.	LOP-LT-1011 and LOP-LT-2011 perform safety functions. The indications are displayed by the PCJ. Shutting down PSA supply to the melter feed pumps terminates feed to the melter.	PPJ and PSA systems operating.
3.9.2.2.4.2	Test to verify that upon detection of a low SBS level, the safety interlock isolates power to the associated SBS primary and standby water purge pump. **CTNs** LOP-LT-1011 LOP-CTR-20003A LOP-CTR-20003B LOP-LT-2011 LOP-CTR-20006A LOP-CTR-20006B	**(TAC)** Upon SBS low level (≥ 24.6.4 inches above the discharge of the downcomer (59.64 inches above the vessel tangent)) signal through the PPJ, the operating SBS condensate purge pump is electrically isolated.	LOP-LT-1011 and LOP-LT-2011 perform safety functions. The indications are displayed by the PCJ.	Pump power, liquid in SBS and PPJ systems operating.
3.9.2.3.1.1	Test to verify the interlock isolates power to the non-safety heating elements upon detection of a high outlet temperature from the pre-heaters.	**(TAC)**		PCJ and PPJ systems operating

Requirement (para #)	Plan (including SSCs)	Acceptance Criteria (test acceptance criteria (TAC) or general test criteria (GTC))*	Notes/Comments	Test Conditions
	CTNs LVP-TT-0136 LVP-TT-0137 LVP-CTR-00001A LVP-CTR-00003A	The interlock isolates the power to non-safety heating upon detection of a high outlet temperature from the pre-heaters (HEPA filter housing temperature reaches 185 °F), preventing the HEPA filter housing temperature from exceeding 192 °F.		
3.9.2.3.1.2	Test to verify the interlock closes the mercury mitigation skid inlet valves upon detection of a high outlet temperature from the pre-heaters. **CTNs** LVP-TT-0136 LVP-TT-0137 LVP-YV-0407 LVP-YV-0415 LVP-YV-0449	**(TAC)** The interlock closes the mercury mitigation skid inlet valves prior to the carbon bed inlet temperature exceeding 338°F.		PCJ and PPJ systems operating
3.9.2.3.1.3	Test to verify the failure position on loss (or simulated loss) of control signal or air to the valve (s): • Offgas HEPA preheaters - fail in an OFF position • Carbon bed adsorber bypass valve - fails in an OPEN position • Carbon bed adsorber inlet valves – fail CLOSED only after the carbon bed adsorber bypass valve has opened. **CTNs** LVP-CTR-00001A LVP-CTR-00003A LVP-YV-0403	**(TAC)** Failed Offgas HEPA Preheater high temperature interlocked components fail safe position on loss of control signal, air, or power		
3.9.2.4.3	Test to verify the interlock opens the carbon bed bypass valve upon detection of high differential CO concentration, then closes the mercury mitigation skid inlet valves. **CTNs** LVP-AT-0405/0406 LVP-AT-0424/0425 LVP-YV-0403 LVP-YV-0407 LVP-YV-0415 LVP-YV-0449	**(TAC)** Upon detection of a high differential CO signal (≥ 454 ppm) by the PPJ, the carbon bed bypass valve opens, then the mercury mitigation skid inlet valve closes. The total time to acquire a gas sample and close the inlet valve is ≤310 seconds.		
3.9.2.4.3.1	Test to verify the failure position on loss (or simulated loss) of control signal or air to the valve (s): • Carbon bed adsorber bypass valve - fails in an OPEN position **CTNs** LVP-YV-0403	**(TAC)** Failed High Differential CO interlocked components fail safe position on loss of control signal, air, or power		
3.9.2.5.2	Test to verify the interlock isolates power to the TCO skid heaters upon detection of high temperature downstream of the TCO skid heater. **CTNs** LVP-CTR-00002	**(TAC)** Upon detection of a high temperature (< 805 °F) at the outlet of the skid heater by the PPJ, power to the Catalyst Skid heaters is isolated. Confirm that on activation of the safety catalytic oxidizer skid heater high temperature interlock, all safety components in the LVP systems as listed below and defined in the supplier submittal	References: 24590-LAW-J0X-J41T-00001, *LAW Facility Safety Instrumented Function Trip Setpoint Index*	

Requirement (para #)	Plan (including SSCs)	Acceptance Criteria (test acceptance criteria (TAC) or general test criteria (GTC))*	Notes/Comments	Test Conditions
	LVP-TT-0509/TE-0509 LVP-TT-0516/TE-0516	requirements summary document (24590-LAW-3PS-PPJ-T0006 [under development]) are activated to their safe states LVP-HTR-00002 shuts down via LVP-YC-0510	24590-LAW-M6-LVP-00005002, P&*ID - LAW - LAW Secondary Offgas/Vessel Vent Process System SCO/SCR Skid* 24590-LAW-J3-LVP-90016, *Logic Diagram - LAW-T05F02C01 Catalytic Oxidizer Skid Heater High Temperature Interlock* 24590-LAW-J3-LVP-91001, *Logic Diagram - LAW LVP SIF Final Elements Sheet 1*	
3.9.2.5.2.1	Test to verify the failure position on loss (or simulated loss) of control signal or air to the valve (s): • Thermal catalytic oxidizer heater - fails in an OFF position. **CTNs** LVP-CTR-00002	**(TAC)** Failed TCO Heater High Temperature interlocked components fail safe position on loss of control signal, air, or power.		
3.9.2.5.3.1	Test to verify the interlock isolates power to the skid heaters, upon detection of a high temperature on the TCO skid outlet. **CTNs** LVP-TT-0552/TE-0552 LVP-TT-0554/TE-0554 LVP-CTR-00002	**(TAC)** Upon detection of a high TCO skid outlet temperature (< 428 °F), the PPJ isolates power to the TCO heater.		
3.9.2.5.3.2	Test to verify the interlock isolates ammonia flow upon detection of a high temperature on the TCO skid outlet. **CTNs** LVP-TT-0552/TE-0552 LVP-TT-0554/TE-0554 LVP-YV-0528 LVP-YV-0560	**(TAC)** Upon detection of a high TCO skid outlet temperature (< 428 °F), the PPJ isolates ammonia flow to the TCO skid.		
3.9.2.5.3.3	Test to verify the failure position on loss (or simulated loss) of control signal or air to the valve (s): • Ammonia dilution ammonia supply valves - fail in a CLOSED position • Thermal catalytic oxidizer heater - fails in an OFF position. **CTNs** LVP-CTR-00002 LVP-YV-0528 LVP-YV-0560	**(TAC)** Failed TCO Skid High Temperature interlocked components fail safe position on loss of control signal, air, or power.		
3.9.2.5.5	Test to verify the interlock closes the isolation valve on the ammonia supply line, upon detection of high ammonia supply flow. **CTNs** LVP-FT-0530/FE-0530 LVP-FT-0531/FE-0531 LVP-YV-0528 LVP-YV-0560	**(TAC)** Upon detection of a high ammonia flow signal (≥ 47 scfm) the PPJ isolates ammonia flow to the TCO skid.		.
3.9.2.5.5.1	Test to verify the failure position on loss (or simulated loss) of control signal or air to the valve (s):	**(TAC)**		

Requirement (para #)	Plan (including SSCs)	Acceptance Criteria (test acceptance criteria (TAC) or general test criteria (GTC))*	Notes/Comments	Test Conditions
	• Ammonia dilution ammonia supply valves - fail in a CLOSED position **CTNs** LVP-YV-0528 LVP-YV-0560	Failed Ammonia High Flow interlocked components fail safe position on loss of control signal or air.		
3.9.2.5.6	Test to verify the interlock closes the isolation valve on the ammonia supply line, upon detection of dilution-air flow below the minimum allowable and within the maximum closure time of the valves to prevent reaching LFL in Room L-0322A and prevent exceeding PAC-2 concentration to CLW. **CTNs** LVP-FT-0540/FE-0540 LVP-FT-0541/FE-0541 LVP-YV-0528 LVP-YV-0560	**(TAC)** Upon detection of a low dilution air flow signal (≤ 369 scfm), the PPJ isolates ammonia flow to the TCO skid and within the maximum closure time (TBD) of the valves to prevent reaching LFL in Room L-0322A and prevent exceeding PAC-2 concentration to CLW.		
3.9.2.5.6.1	Test to verify the failure position on loss (or simulated loss) of control signal or air to the valve (s): • Ammonia dilution ammonia supply valves - fail in a CLOSED position **CTNs** LVP-YV-0528 LVP-YV-0560	**(TAC)** Failed Ammonia Dilution Air Low Flow interlocked components fail safe position on loss of control signal or air.		
3.9.2.6.2	Test to verify the interlock closes the recirculation line isolation valve for the caustic scrubber, bypasses the TCO skid, isolates power to the TCO skid heater, and stops ammonia and air supply to the ammonia/air dilution skid upon detection of low pressure in the caustic scrubber recirculation line. **CTNs** LVP-PT-0220 LVP-YV-0501 LVP-YV-0538 LVP-YV-0528 LVP-YV-0560 LVP-CTR-00002LVP-YV-0219	**(TAC)** Upon detection of a low pressure (≤ 6.8 psig) in the caustic scrubber recirculation line by the PPJ, the PPJ closes the recirculation line isolation valve for the caustic scrubber, bypasses the TCO skid, isolates power to the TCO skid heater, and stops ammonia and air supply to the ammonia/air dilution skid.		
3.9.2.6.2.1	Test to verify the failure position on loss (or simulated loss) of control signal or air to the valve (s): • Thermal catalytic oxidizer skid bypass valve - fails in an OPEN position • PPJ ammonia dilution air supply valve - fails in a CLOSED position • PPJ ammonia dilution ammonia supply valves - fail in a CLOSED position • Thermal catalytic oxidizer heater - fails in an OFF position • Caustic scrubber scrub inlet valve - fails in a CLOSED position **CTNs** LVP-YV-0501 LVP-YV-0538 LVP-YV-0528 LVP-YV-0560 LVP-CTR-00002 LVP-YV-0219	**(TAC)** Failed Caustic Scrubber Recirculation Low Pressure interlocked components fail safe position on loss of control signal or air.		

Requirement (para #)	Plan (including SSCs)	Acceptance Criteria (test acceptance criteria (TAC) or general test criteria (GTC))*	Notes/Comments	Test Conditions
3.9.2.6.3	Test to verify the interlock bypasses the TCO skid, isolates power to the TCO skid heater, and stops ammonia and air supply to the ammonia/air dilution skid upon detection of low flow rate in the caustic scrubber recirculation line. **CTNs** LVP-FT-0221/FE-0221 LVP-YV-0501 LVP-YV-0538 LVP-YV-0528 LVP-YV-0560 LVP-CTR-00002	**(TAC)** Upon detection of a low flow rate (≤ 160 gpm) in the caustic scrubber recirculation line, the interlock isolates the power to the TCO skid heater, bypasses the TCO skid, and stops ammonia and air supply to the ammonia/air dilution skid.		LVP-PMP-00003A or 3B circulating caustic solution (or PSW in caustic tank).
3.9.2.6.3.1	Test to verify the failure position on loss (or simulated loss) of control signal or air to the valve (s): • Thermal catalytic oxidizer skid bypass valve - fails in an OPEN position • PPJ ammonia dilution air supply valve - fails in a CLOSED position • PPJ ammonia dilution ammonia supply valves - fail in a CLOSED position • Thermal catalytic oxidizer heater - fails in an OFF position **CTNs** LVP-YV-0501 LVP-YV-0538 LVP-YV-0528 LVP-YV-0560 LVP-CTR-00002	**(TAC)** Failed Caustic Scrubber Recirculation Low Flow interlocked components fail safe position on loss of control signal or air.		
3.9.2.6.6	Test to verify the interlock closes the process water line isolation valve upon detection of low pressure in the process water line. **CTNs** LVP-PT-0216 LVP-YV-0201	**(TAC)** Upon detection of a low-pressure signal (≤ 53.2 psig) in the process water line input to the caustic scrubber by the PPJ, the PSW supply line valve is isolated.		ISA, PSW, PCJ and PPJ systems.
3.9.2.6.6.1	Test to verify the failure position on loss (or simulated loss) of control signal or air to the valve (s): • Caustic scrubber process service water supply valve - fails in a CLOSED position **CTNs** LVP-YV-0201	**(TAC)** Failed Caustic Scrubber Process Water Supply Low Pressure interlocked components fail safe position on loss of control signal or air.		
3.9.2.7.1.1	Test to verify the interlock reconfigures the offgas system to a known state when a high/low LVP header vacuum is detected. **CTNs** LVP-PT-0139 LVP-PT-0140 LFP-YV-1208 LFP-YV-1212 LFP-YV-1211 LFP-YV-1207 LFP-YV-2208 LFP-YV-2212 LFP-YV-2207	**(TAC)** Upon detection of a high/low header vacuum (≥ -56.5″ w.g. or ≤-139.5″ w.g., respectively) by the PPJ: • Stops air to the ADS pumps for both melters (LFP/LCP) • Stops ADS flush water to both melters (LFP/LCP) • Isolate film cooler wash supply	Inbleed valves open no sooner than 78.5 seconds after detection of the high-pressure condition	LFP, PSW, AMR, ISA, PCJ and PPJ systems.

Requirement (para #)	Plan (including SSCs)	Acceptance Criteria (test acceptance criteria (TAC) or general test criteria (GTC))*	Notes/Comments	Test Conditions
	LFP-YV-2211 LOP-YV-1109 LOP-YV-1405 LOP-YV-2109 LOP-YV-2405			
3.9.2.7.1.2	Test to verify the interlock reconfigures the offgas system to a known state when a high/low LVP header vacuum is detected. **CTNs** LVP-PT-0139 LVP-PT-0140 LOP-YV-1098 LOP-YV-1161 LOP-YV-2098 LOP-YV-2161 LOP-YV-1129 LOP-YV-1404 LOP-YV-2129 LOP-YV-2404 LOP-YV-1401 LOP-YV-1407 LOP-YV-1402 LOP-YV-1406 LOP-YV-2401 LOP-YV-2407 LOP-YV-2402 LOP-YV-2406	**(TAC)** Upon detection of a high/low header vacuum (≥ -56.5″ w.g. or ≤-139.5″ w.g., respectively) by the PPJ: • Close WESP Purge Air Valves • Close Film Cooler Air Supply Valves Open Primary and Standby Film Cooler Emergency Air Inbleed Valves	inbleed valves open no sooner than 78.5 seconds after detection of the high-pressure condition	LFP, PSW, AMR, ISA, PCJ and PPJ systems.
3.9.2.7.1.3	Test to verify the interlock reconfigures the offgas system to a known state when a high/low LVP header vacuum is detected. **CTNs** LVP-PT-0139 LVP-PT-0140 LOP-YV-1008 LOP-YV-2008 LOP-FV-1140 LOP-FV-2140 LVP-YV-0097 LVP-YV-0501 LVP-YV-0403 LVP-PV-0072	**(TAC)** Upon detection of a high/low header vacuum (≥ -56.5″ w.g. or ≤-139.5″ w.g., respectively) by the PPJ: • Open Standby Film Cooler Isolation Valve • Open Offgas Flow Control Valve • Open Caustic Scrubber Bypass Valve • Open TCO Skid Bypass Valve • Open Carbon Bed Adsorber Bypass Valve Close Vessel Vent Header Pressure Control Valve	inbleed valves open no sooner than 78.5 seconds after detection of the high-pressure condition	LFP, PSW, AMR, ISA, PCJ and PPJ systems.
3.9.2.7.1.4	Test to verify the interlock reconfigures the offgas system to a known state when a high/low LVP header vacuum is detected. **CTNs** LVP-PT-0139 LVP-PT-0140 LVP-YV-0560	**(TAC)** Upon detection of a high/low header vacuum (≥ -56.5″ w.g. or ≤-139.5″ w.g., respectively) by the PPJ: • Isolate power to the TCO skid heater. • Close Ammonia Dilution Ammonia Supply Valve • Close Ammonia Dilution Air Supply Valve	inbleed valves open no sooner than 78.5 seconds after detection of the high-pressure condition	LFP, PSW, AMR, ISA, PCJ and PPJ systems.

Requirement (para #)	Plan (including SSCs)	Acceptance Criteria (test acceptance criteria (TAC) or general test criteria (GTC))*	Notes/Comments	Test Conditions
	LVP -YV-0528 LVP -YV-0538 LVP-CTR-00002			
3.9.2.7.1.5	Test to verify the interlock reconfigures the offgas system to a known state when a high/low LVP header vacuum is detected. **CTNs** LVP-PT-0139 LVP-PT-0140 LVP-EXHR-00001A LVP-EXHR-00001B LVP-EXHR-00001C LVP-YV-0453 LVP-YV-0454	**(TAC)** Upon detection of a high/low header vacuum (≥ -56.5″ w.g. or ≤-139.5″ w.g., respectively) by the PPJ: • Set offgas exhausters to fixed speed (2020 RPM) Open the isolation valve to the bypass vacuum breaker.	inbleed valves open no sooner than 78.5 seconds after detection of the high-pressure condition	LFP, PSW, AMR, ISA, PCJ and PPJ systems.
3.9.2.7.1.6	Test to verify the failure position on loss (or simulated loss) of control signal or air to the valve (s): • Offgas exhauster adjustable speed drive - fail in a minimum FIXED speed position • Melter 1 and 2 Feed Pump Plant Air Supply Valves – fail in a CLOSED position • Melter 1 and 2 Feed Pump Demineralized Water Supply Valves – fail in a CLOSED position • Melter 1 and 2 WESP Purge Air Valves – fail in a CLOSED position • Melter 1 and 2 Film Cooler Wash Supply Valves – fail in a CLOSED position • Melter 1 and 2 Film Cooler Air Supply Valves – fail in a CLOSED position • Melter 1 and 2 Primary Film Cooler Emergency Air Inbleed Valves – fail in an OPEN position • Melter 1 and 2 Standby Film Cooler Emergency Air Inbleed Valves – fail in an OPEN position • Melter 1 and 2 Standby Film Cooler Isolation Valves – fail in an OPEN position • Melter 1 and 2 Offgas Flow Control Valves – fail in an OPEN position • Ammonia Dilution Ammonia Supply Valves – fail in a CLOSED position • Ammonia Dilution Air Supply Valve – fails in a CLOSED position • Caustic Scrubber Bypass Valve – fails in an OPEN position • TCO Skid Bypass Valve – fails in an OPEN position • Carbon Bed Adsorber Bypass Valve – fails in an OPEN position • Electrical TCO Heater contactor – fails in an OPEN position. • Vessel Vent Header Pressure Control Valve – fails in a CLOSED position • LVP Bypass Vacuum Breaker Isolation Valves – fail in an OPEN position **CTNs** LOP-YV-1008 LFP-YV-1208 LFP-YV-1212 LFP-YV-1211 LFP-YV-1207 LFP-YV-2208 LFP-YV-2212 LFP-YV-2207 LFP-YV-2211 LOP-YV-1129	**(TAC)** Failed Offgas Header High/Low Pressure interlocked components fail safe position on loss of control signal or air.		

Requirement (para #)	Plan (including SSCs)	Acceptance Criteria (test acceptance criteria (TAC) or general test criteria (GTC))*	Notes/Comments	Test Conditions
	LOP-YV-1404 LOP-YV-1109 LOP-YV-1405 LOP-YV-1098 LOP-YV-1161 LOP-YV-1401 LOP-YV-1407 LOP-YV-1402 LOP-YV-1406 LOP-FV-1140 LOP-YV-2129 LOP-YV-2404 LOP-YV-2109 LOP-YV-2405 LOP-YV-2098 LOP-YV-2161 LOP-YV-2008 LOP-YV-2401 LOP-YV-2407 LOP-YV-2402 LOP-YV-2406 LOP-FV-2140 LVP-PV-0072 LVP-YV-0403 LVP-YV-0501 LVP-YV-0560 LVP -YV-0528 LVP -YV-0538 LVP-YV-0097 LVP-CTR-00002 LVP-EXHR-00001A/B/C LVP-YV-0453 LVP-YV-0454			
3.9.2.8.1.1	Test to verify the interlock closes the normal supply isolation valve upon detection of low pressure in the normal purge air supply. **CTNs** LVP-PT-0156 LVP-PT-0160 LVP-PT-0164 LVP-YV-0157 LVP-YV-0161 LVP-YV-0165	**(TAC)** Upon detection of offgas exhauster 1A/1B/1C shaft seal air supply low pressure (≤ 90 psig): • Isolate normal air supply		ISA, PCJ and PPJ systems.
3.9.2.8.1.2	Test to verify the interlock stops air supply to both melters' ADS pumps upon detection of low pressure in the normal purge air supply. **CTNs**	**(TAC)** Upon detection of offgas exhauster 1A/1B/1C shaft seal air supply low pressure (≤ 90 psig): Stop air to the ADS pumps for both melters. (LFP/LCP)		ISA, PCJ and PPJ systems.

Requirement (para #)	Plan (including SSCs)	Acceptance Criteria (test acceptance criteria (TAC) or general test criteria (GTC))*	Notes/Comments	Test Conditions
	LVP-PT-0156 LVP-PT-0160 LVP-PT-0164 LFP-YV-1208 LFP-YV-1212 LFP-YV-2208 LFP-YV-2212			
3.9.2.8.1.3	Test to verify the failure position on loss (or simulated loss) of control signal or air to the valve (s): • Exhauster shaft normal purge air supply valves - fails in a CLOSED position **CTNs** LVP-YV-0157 LVP-YV-0161 LVP-YV-0165	**(TAC)** Failed Offgas Exhauster Shaft Seal Air Supply Low Pressure interlocked components fail safe position on loss of control signal or air.		
3.9.2.8.4	Test to verify the interlock activates the backup purge air supply upon detection of low purge air pressure. **CTNs** LVP-PT-0158 LVP-PT-0162 LVP-PT-0166 LVP-YV-0159 LVP-YV-0163 LVP-YV-0167	**(TAC)** Upon detection of a low pressure (≤ 35.7 psig) in the ISA, purge air to the exhauster shaft seals, the backup air supply is activated.		LFP, ISA, PCJ and PPJ systems.
3.9.2.8.4.1	Test to verify the failure position on loss (or simulated loss) of control signal or air to the valve (s): • Exhauster shaft seal air regulator bypass valves - fail in an OPEN position **CTNs** LVP-YV-0159 LVP-YV-0163 LVP-YV-0167	**(TAC)** Failed Offgas Exhauster 1A/1B/1C Shaft Seal Low Pressure interlocked components fail safe position on loss of control signal or air.		
3.9.2.9.1	Test to verify the interlock actions to open the melter primary and standby offgas film cooler air inbleed valves no sooner than 120 seconds after termination of film cooler air. **CTNs** LOP-YV-1401 LOP-YV-1402 LOP-YV-1406 LOP-YV-1407 LOP-YV-2401 LOP-YV-2402 LOP-YV-2406 LOP-YV-2407	**(TAC)** Melter primary and standby offgas film cooler air inbleed valves open no sooner than 120 seconds after termination of film cooler air	Tested in conjunction with LMP tests	

Requirement (para #)	Plan (including SSCs)	Acceptance Criteria (test acceptance criteria (TAC) or general test criteria (GTC))*	Notes/Comments	Test Conditions
3.9.2.9.1	Test to verify the following functions are performed upon detection of high pressure (reduced vacuum) in the melter plenum: • Stops air and water flow to the associated primary and standby film coolers. • Opens the associated primary and standby film cooler emergency air inbleeds. • Opens the associated bypass valve from the standby film cooler to the SBS. • Stops air flow to the associated WESP. **CTNs** LMP-PDT-1528 LMP-PDT-1529 LOP-YV-1129 LOP-YV-1404 LOP-YV-1109 LOP-YV-1405 LOP-YV-1098 LOP-YV-1161 LOP-YV-1008 LOP-YV-1401 LOP-YV-1407 LOP-YV-1402 LOP-YV-1406 LOP-FV-1140 LMP-PDT-2528 LMP-PDT-2529 LOP-YV-2129 LOP-YV-2404 LOP-YV-2109 LOP-YV-2405 LOP-YV-2098 LOP-YV-2161 LOP-YV-2008 LOP-YV-2401 LOP-YV-2407 LOP-YV-2402 LOP-YV-2406 LOP-FV-2140	**(TAC)** Upon detection of high melter plenum pressure exceeding -0.1 in w.g. (relative to the annulus) • Shuts primary and standby film cooler air • Shuts primary and standby film cooler water • Shuts WESP air • Open standby offgas bypass line • Open primary and standby offgas film cooler air inbleed • Open WESP outlet valve	The PPJ, LMP, and LOP systems are required to be operational to perform this test. Tested in conjunction with LMP tests	
3.9.2.9.1.1	Test to verify the failure position on loss (or simulated loss) of control signal or air to the valve (s): • Melter 1 and 2 Film Cooler Wash Supply Valves – fail in CLOSED position • Melter 1 and 2 WESP Purge Air Valves – fail in a CLOSED position • Melter 1 and 2 Film Cooler Air Supply Valves – fail in a CLOSED position • Melter 1 and 2 Standby Film Cooler Isolation valves – fails in an OPEN position • Melter 1 and 2 Primary Film Cooler Emergency Air Inbleed Valves – fail in an OPEN position • Melter 1 and 2 Standby Film Cooler Emergency Air Inbleed Valves – fail in an OPEN position • Melter 1 and 2 Offgas Flow Control Valves – fail in an OPEN position	**(TAC)** Failed LMP Melter Plenum High Pressure interlocked components fail safe position on loss of control signal or air.		

Requirement (para #)	Plan (including SSCs)	Acceptance Criteria (test acceptance criteria (TAC) or general test criteria (GTC))*	Notes/Comments	Test Conditions
	CTNs LOP-YV-1129 LOP-YV-1404 LOP-YV-1109 LOP-YV-1405 LOP-YV-1098 LOP-YV-1161 LOP-YV-1008 LOP-YV-1401 LOP-YV-1407 LOP-YV-1402 LOP-YV-1406 LOP-FV-1140 LOP-YV-2129 LOP-YV-2404 LOP-YV-2109 LOP-YV-2405 LOP-YV-2098 LOP-YV-2161 LOP-YV-2008 LOP-YV-2401 LOP-YV-2407 LOP-YV-2402 LOP-YV-2406 LOP-FV-2140			
3.9.2.10.1.1	Test to demonstrate that within 5 minutes of detection of sustained loss of normal power, the interlock performs the following and maintains event duration within capacity of the UPE: • Close Film cooler water valves **CTNs** UPE-YY-2303 UPE-YY-2403 UPE-YY-2503 LOP-YV-1109 LOP-YV-1405 LOP-YV-2109 LOP-YV-2405	**(TAC)** Upon detection of loss of normal power to the offgas exhausters the interlock actions were performed within 5 minutes of a sustained loss of power and maintained for the event duration within capacity of the UPE		
3.9.2.10.1.2	Test to demonstrate that within 5 minutes of detection of sustained loss of normal power, the interlock performs the following and maintains event duration within capacity of the UPE: • Close film cooler air valves • Close WESP air valves • Open melter primary and standby offgas film cooler air inbleed valves no sooner than 80.5 sec after termination of film cooler air (to allow vacuum to be re-established in melter if lost). **CTNs**	**(TAC)** Upon detection of loss of normal power to the offgas exhausters the interlock actions were performed within 5 minutes of a sustained loss of power and maintained for the event duration within capacity of the UPE		

Requirement (para #)	Plan (including SSCs)	Acceptance Criteria (test acceptance criteria (TAC) or general test criteria (GTC))*	Notes/Comments	Test Conditions
	UPE-YY-2303 UPE-YY-2403 UPE-YY-2503 LOP-YV-1098 LOP-YV-1161 LOP-YV-2098 LOP-YV-2161 LOP-YV-1129 LOP-YV-1404 LOP-YV-2129 LOP-YV-2404 LOP-YV-1401 LOP-YV-1407 LOP-YV-1402 LOP-YV-1406 LOP-YV-2401 LOP-YV-2407 LOP-YV-2402 LOP-YV-2406			
3.9.2.10.1.3	Test to demonstrate that within 5 minutes of detection of sustained loss of normal power, the interlock performs the following and maintains event duration within capacity of the UPE: • Open standby offgas line valve • Open WESP outlet valve • Close vessel vent isolation valve • Open carbon bed bypass valve • Open SCO/SCR bypass valve prior to the caustic scrubber bypass valve • Open caustic scrubber bypass valve **CTNs** UPE-YY-2303 UPE-YY-2403 UPE-YY-2503 LOP-YV-1008 LOP-YV-2008 LOP-YV-1140 LOP-YV-2140 LVP-PV-0072 LVP-YV-0403 LVP-YV-0501 LVP-YV-0097	**(TAC)** Upon detection of loss of normal power to the offgas exhausters the interlock actions were performed within 5 minutes of a sustained loss of power and maintained for the event duration within capacity of the UPE		
3.9.2.10.1.4	Test to demonstrate that within 5 minutes of detection of sustained loss of normal power, the interlock performs the following and maintains event duration within capacity of the UPE: • Close SCO/SCR dilution air supply valve • Close ammonia supply valve • Turn off SCO/SCR heater control **CTNs**	**(TAC)** Upon detection of loss of normal power to the offgas exhausters the interlock actions were performed within 5 minutes of a sustained loss of power and maintained for the event duration within capacity of the UPE		

Requirement (para #)	Plan (including SSCs)	Acceptance Criteria (test acceptance criteria (TAC) or general test criteria (GTC))*	Notes/Comments	Test Conditions
	UPE-YY-2303 UPE-YY-2403 UPE-YY-2503 LVP-YV-0538 LVP-YV-0528 LVP-YV-0560 LVP-CTR-00002			
3.9.2.10.1.5	Test to demonstrate that within 5 minutes of detection of sustained loss of normal power, the interlock performs the following and maintains event duration within capacity of the UPE: • Set exhauster(s) to fixed speed (2020 RPM) • Open vacuum breaker line valves **CTNs** UPE-YY-2303 UPE-YY-2403 UPE-YY-2503 LVP-EXHR-00001A LVP-EXHR-00001B LVP-EXHR-00001C LVP-YV-0453 LVP-YV-0454	**(TAC)** Upon detection of loss of normal power to the offgas exhausters the interlock actions were performed within 5 minutes of a sustained loss of power and maintained for the event duration within capacity of the UPE		
3.9.2.10.1.6	Test to verify the failure position on loss (or simulated loss) of control signal or air to the valve (s): • Melter film cooler air supply valves - fail in a CLOSED position • Melter film cooler water supply valves - fail in a CLOSED position • WESP purge air valves - fail in a CLOSED position • Melter standby film cooler isolation valve - fails in an OPEN position • Melter 1 and 2 primary film cooler emergency air inbleed valves - fail in an OPEN position • Melter standby film cooler emergency air inbleed valves - fail in an OPEN position • Melter offgas flow control valve - fails in an OPEN position • Carbon bed adsorber bypass valve - fails in an OPEN position • Thermal catalytic oxidizer skid bypass valve - fails in an OPEN position • Ammonia dilution air supply valves - fail in a CLOSED position • Ammonia dilution ammonia supply valves - fail in a CLOSED position • Thermal catalytic oxidizer heater - fails in an OFFposition • Caustic scrubber bypass valve - fails in an OPEN position • Vacuum Breaker Line Valves - fail in an OPEN position • Offgas exhausters - fail in a minimum FIXED speed position (2020 RPM) **CTNs** LOP-YV-1129 LOP-YV-1404 LOP-YV-1109 LOP-YV-1405 LOP-YV-1098 LOP-YV-1161	**(TAC)** Failed Loss of Normal Power to Safety Equipment interlocked components fail safe position on loss of control signal or air.		

Requirement (para #)	Plan (including SSCs)	Acceptance Criteria (test acceptance criteria (TAC) or general test criteria (GTC))*	Notes/Comments	Test Conditions
	LOP-YV-1008 LOP-YV-1401 LOP-YV-1407 LOP-YV-1402 LOP-YV-1406 LOP-FV-1140 LFP-YV-2208 LFP-YV-2212 LFP-YV-2207 LFP-YV-2211 LOP-YV-2129 LOP-YV-2404 LOP-YV-2109 LOP-YV-2405 LOP-YV-2098 LOP-YV-2161 LOP-YV-2008 LOP-YV-2401 LOP-YV-2407 LOP-YV-2402 LOP-YV-2406 LOP-FV-2140 LVP-PV-0072, LVP-YV-0403 LVP-YV-0501 LVP-YV-0538 LVP-YV-0528 LVP-YV-0560 LVP-CTR-00002 LVP-YV-0097 LVP-EXHR-00001A LVP-EXHR-00001B LVP-EXHR-00001C LVP-YV-0453 LVP-YV-0454			
3.9.2.15.1	Test to verify that the pneumatic permissive for the SCO/SCR skid bypass valve (LVP-YV-0501) • Opens before or at the same time the scrubber bypass valve (LVP-YV-0097) begins to open • Be in its end state open position prior to the caustic scrubber bypass valve (LVP-YV-0097) reaching its end state open position **CTNs:** LVP-YV-0097 LVP-YV-0501	**(TAC)** LVP-YV-0501 opens before or at the same time that LVP-YV-0097 begins to open LVP-YV-0501 reaches its end state open position prior to LVP-YV-0097 reaching its end state open position		LVP is operational
3.9.2.15.2	Test to verify that the pneumatic permissive for the carbon bed adsorber bypass valve (LVP-YV-0403)	**(TAC)**		LVP is operational

Requirement (para #)	Plan (including SSCs)	Acceptance Criteria (test acceptance criteria (TAC) or general test criteria (GTC))*	Notes/Comments	Test Conditions
	• Opens before or at the same time the carbon bed adsorber inlet valves (LVP-YV-0407, LVP-YV-0415, LVP-YV-0449) begins to close • Be in its end state open position prior to the carbon bed adsorber inlet valves (LVP-YV-0407, LVP-YV-0415, LVP-YV-0449) reaching their end state closed position **CTNs:** LVP-YV-0403 LVP-YV-0407 LVP-YV-0415 LVP-YV-0449	LVP-YV-0403 opens before or at the same time LVP-YV-0407, LVP-YV-0415, LVP-YV-0449 begin to close LVP-YV-0403 reach its end state open position prior to LVP-YV-0407, LVP-YV-0415, and LVP-YV-0449 reaching their end state closed position		
3.10.2.4	Test to verify that LVP-RO-00002 limits flow to no greater than 3.9 SCFM of air. **CTNs:** LVP-RO-00002	**(TAC)** Return flow through the stack condensate drain is maintained less than or equal than 3.9 SCFM.		LVP is operational
3.10.2.5	Test to verify that LVP-RO-00001 limits flow to no greater than 26.7 scfm. **CTNs:** LVP-RO-00001	**(TAC)** Vessel vent header in-flow to the LVP header is maintained less than or equal than 26.7 SCFM.		LVP is operational

***Note:** Test acceptance criteria are based on requirements from authorization basis documents and general test criteria are requirements from other sources.

CTN = component tag number; GTC = general test criteria; TAC = test acceptance criteria

Appendix B Descriptions of System Functional Flow and Interactions

Function: A.1	Ventilate (Draw) Melter Offgas
Detail description: The LOP system draws offgas from the LAW melters, maintains a negative pressure in the melter plenums, offgas equipment, and piping relative to adjacent areas, and confines hazardous gases.	
Initiation: This function initiates during melter startup and LOP/LVP startup.	
Termination: This function terminates during melter shutdown.	
Parallel or sequential functions: All	
Applicable modes: Normal Operations	

Function: A.2	Cool Melter Offgas
Detail description: The LOP system cools the offgas enabling subsequent treatment. Cooling is performed by the offgas film cooler and SBS.	
Initiation: This function initiates during melter startup and LOP/LVP startup.	
Termination: This function terminates during melter shut down.	
Parallel or sequential functions: All	
Applicable modes: Normal Operations	

Function: A.3	Remove Particulates and Aerosols
Detail description: Remove radioactive entrained particulates and aerosols from the offgas stream via the SBS and WESP.	
Initiation: This function initiates during melter startup and LOP/LVP startup.	
Termination: This function terminates during melter shutdown.	
Parallel or sequential functions: All	
Applicable modes: Normal Operations	

Function: A.4	Ventilate Vessels
Detail description: Ventilate process system vessels (LCP, LFP, and RLD) and LOP/LVP startup.	
Initiation: This function initiates when LCP, LFP, and RLD tanks are in use.	
Termination: This function terminates when tanks are not in use.	
Parallel or sequential functions: All	
Applicable modes: Normal Operations	

Function: A.5	Preheat Offgas
Detail description: Preheat offgas stream before the HEPA filters to prevent moisture condensation and subsequent blinding of the HEPA filters.	
Initiation: This function initiates during melter startup, when LCP, LFP, RLD tanks are in use, and during LOP/LVP startup.	
Termination: This function terminates during melter shutdown and when tanks not in use.	
Parallel or sequential functions: All	
Applicable modes: Normal Operations	

Function: A.6	Remove Particulates
Detail description: Remove radioactive, entrained particulates from the offgas stream via HEPA filters.	
Initiation: This function initiates during melter startup, when LCP, LFP, RLD tanks are in use, and during LOP/LVP startup.	
Termination: This function terminates during melter shutdown and when tanks not in use.	
Parallel or sequential functions: All	
Applicable modes: Normal Operations	

Function: A.7	Treat offgas
Detail description: Treat offgas to remove PODCs and hazardous emissions. Transfer scrubber effluents to the caustic collection vessel. Scrubber effluent collected by the caustic collection vessel is sent to either the RLD system in PT Facility (baseline configuration) or the DEP system in the EMF (DFLAW configuration) for further treatment/disposal.	
Initiation: This function initiates during melter startup, when LCP, LFP, RLD tanks are in use, and during LOP/LVP startup.	
Termination: This function terminates during melter shutdown and when tanks not in use.	
Parallel or sequential functions: All	
Applicable modes: Normal Operations	

Function: A.8	Exhaust
Detail description: The LOP and LVP systems maintain all components at a lower pressure relative to the room or gallery in which they reside. One set of fans and air injection provide the motive force to the offgas through the exhaust stack.	
Initiation: This function initiates during melter startup, when LCP, LFP, RLD tanks are in use, and during LOP/LVP startup.	
Termination: This function terminates during melter shutdown and when tanks not in use.	
Parallel or sequential functions: All	
Applicable modes: Normal Operations	

Function: B.1	Actuate Valves
Detail description: The ISA system provides the motive force to safety and nonsafety valves on the LOP and LVP systems and supply instrumentation purge for the LVP system.	
Initiation: This function initiates during startup of LOP/LVP.	
Termination: This function terminates when LOP/LVP is shutdown or melter shutdown.	
Parallel or sequential functions: All	
Applicable modes: Normal Operations	

Function: C.1	Receive Electrical Power
Detail description: The LVE system provides electrical power to the nonsafety LOP/LVP equipment and instruments.	
Initiation: This function initiates during startup of LOP/LVP.	
Termination: This function terminates when LOP/LVP is shutdown or melter shutdown.	
Parallel or sequential functions: All	
Applicable modes: Normal Operations	

Function: D.1	Normal Controls
Detail description: Nonsafety monitoring and control functions are supported by the PCJ system. Components monitored and interlocks initiated that are controlled automatically by the PPJ system are also monitored by the PCJ system during normal operations.	
Initiation: This function initiates during melter startup, when LCP, LFP, RLD tanks are in use, and during LOP/LVP startup.	
Termination: This function terminates during melter shutdown and when tanks are not in use.	
Parallel or sequential functions: All	
Applicable modes: LOP/LVP startup, Normal Operations, and not credited for the design basis event	

Function: F.2	Safety Instrumented Functions and Alarms
Detail description: Safety instrumented functions and alarms. Automatic Safety monitoring and control functions are supported by the PPJ system.	
Initiation: This function initiates when the LAW Facility is in startup operations	
Termination: This function terminates when LAW glass production operations are complete.	
Parallel or sequential functions: All	
Applicable modes: All	

Appendix C Deleted

Appendix D System Procedures

RESERVED

Appendix E System History

RESERVED

Appendix F Programmatic

The following requirements are identified from Level 1 and 2 source documents (refer to 24590-WTP-RPT-ENG-01-001), or they have a direct association with implementation of a design requirement (e.g., operating constraints to ensure corrosion and design life requirements can be met). They are not design requirements and, therefore, are not subject to verification; however, they are to be implemented programmatically for system operations and maintenance. Functional and associated design requirements may have been defined separately to ensure the system design supports the achievement of these programmatic requirements.

Table F-1 Tier 1 and 2 Programmatic (Non-Design) WTP LOP/LVP System Requirements

Section #	Section 3 Requirement Paragraph Reference (or N/A)	Requirement Source	Requirement	Document in which implemented (TBD until doc developed)
WTP Contract				
F-1	N/A	N/A	N/A	N/A
Nuclear Safety (e.g., TSR, Specific Administrative Controls)				
F-2	N/A	N/A	N/A	N/A
F-3	N/A	N/A	N/A	N/A
Environmental Permit Conditions				
F-4	N/A	Section III(10)(I)(1)(d)(i), DWP	The permittees will inspect the LAW vitrification system in accordance with the inspection schedules in Operating Unit Group 10, Addendum E1 of the DWP, as modified in accordance with DWP Condition III(10)(C)(5)(c).	**TBD**
F-5	N/A	Section III(10)(I)(1)(d)(ii), DWP	The inspection data for LAW vitrification system will be recorded, and the records will be placed in the WTP unit operating record for the LAW vitrification system, in accordance with DWP Condition III(10)(C)(4).	**TBD**
F-6	N/A	Section III(10)(I)(1)(d)(iv), DWP	The permittees will comply with the inspection requirements specified in	**TBD**

Table F-1 Tier 1 and 2 Programmatic (Non-Design) WTP LOP/LVP System Requirements

Section #	Section 3 Requirement Paragraph Reference (or N/A)	Requirement Source	Requirement	Document in which implemented (TBD until doc developed)
			Operating Unit Group 10, Appendix 9.15 of the DWP, as approved pursuant to DWP Condition III(10)(H)(5)(f), and as modified by DWP Conditions III(10)(H)(3), III(10)(I)(1)(b)(x and xii), and III(10)(I)(1)(h).	
F-7	N/A	Section III(10)(I)(1)(e)(ii), DWP	The permittees will comply with the monitoring requirements specified in the Operating Unit Group 10, Appendices 9.2, 9.3, 9.7, 9.13, 9.15 and 9.18 of the DWP, as approved pursuant to DWP Condition III(10)(H)(5), and as modified by DWP Conditions III(10)(H)(3), III(10)(I)(1)(h), and III(10)(I)(1)(b)(x and xii).	**TBD**
F-8	N/A	Section III(10)(I)(1)(e)(iv), DWP	The permittees will operate, calibrate, and maintain the carbon monoxide and hydrocarbon continuous emission monitors specified in the DWP in accordance with Performance Specifications 4B and 8A of 40 CFR 60, Appendix B, in accordance with Appendix to Subpart EEE of 40 CFR 63, *National Emission Standards for Hazardous Air Pollutants for Source Categories*, and Operating Unit Group 10 Appendix 9.15 of the DWP, as approved pursuant to DWP Condition III(10)(H)(5)(f),	**TBD**

Table F-1 Tier 1 and 2 Programmatic (Non-Design) WTP LOP/LVP System Requirements

Section #	Section 3 Requirement Paragraph Reference (or N/A)	Requirement Source	Requirement	Document in which implemented (TBD until doc developed)
			and as modified by DWP Conditions III(10)(H)(3), III(10)(I)(1)(h), and III(10)(I)(1)(b)(x and xii).	
F-9	N/A	Section III(10)(I)(1)(e)(iv), DWP	The permittees will operate, calibrate, and maintain the instruments specified in DWP Tables III(10)(I)(C and F), as approved/modified pursuant to DWP Conditions III(10)(H)(5) and III(10)(H)(3)(d)(v), in accordance with Operating Unit Group 10, Appendix 9.15 of the DWP, as approved pursuant to DWP Condition III(10)(H)(5)(f), and as modified by DWP Conditions III(10)(H)(3), III(10)(I)(1)(h), and III(10)(I)(1)(b)(x and xii).	**TBD**
F-10	N/A	Section III(10)(I)(1)(f)(i), DWP	The permittees will record and maintain in the WTP unit operating record for the LAW vitrification system, all monitoring, calibration, maintenance, test data, and inspection data compiled under the conditions of the DWP, in accordance with DWP Conditions III(10)(C)(4 and 5), as modified by DWP Conditions III(10)(H)(3), III(10)(I)(1)(h), and III(10)(I)(1)(b)(x and xii).	**TBD**
Other				
N/A	N/A	N/A	N/A	N/A

Attachment 4
18-ECD-0078
(42 Pages Excluding Cover Sheet)

24590-LAW-3ZN-LFP-00003, *Updates to LFP/LCP SDD to Align with DSA*

System Design Description Change Notice

CHANGE DOCUMENT NO. 24590-LAW-3ZN-LFP-00003

JOB NO.	TITLE FOR CHANGE NOTICE
24590	Updates to LFP\LCP SDD to Align with DSA

DOCUMENT NUMBER	REV	DOCUMENT NUMBER	REV
24590-LAW-3ZD-LFP-00001	1		

PART OF DESIGN CHANGE PACKAGE (DCP)? ☐ Yes ☒ No

Justification for no DCP: Impacted SSC has not been turned over to the Plant Management organization.

INCORPORATES AN EIE? ☒ Yes ☐ No If yes, list EIEs:

24590-LAW-EIE-M-16-0040 - Rev. 0
24590-LAW-EIE-MS-17-0040 - Rev. 0
24590-LAW-EIE-NS-17-0001 - Rev. 0
24590-LAW-EIE-PE-17-0001 - Rev. 0
24590-LAW-EIE-PE-17-0005 - Rev. 0
24590-WTP-EIE-ENG-17-0018 - Rev. 0
24590-WTP-EIE-PE-16-0002 - Rev. 0
24590-WTP-EIE-PR-17-0001 - Rev. 0
24590-WTP-EIE-SYSE-16-0085 - Rev. 0
24590-WTP-EIE-SYSE-16-0097 - Rev. 0
24590-WTP-EIE-SYSE-16-0098 - Rev. 0
24590-WTP-EIE-SYSE-17-0012 - Rev. 0
24590-WTP-EIE-SYSE-17-0024 - Rev. 0

JUSTIFICATION FOR CHANGE

Incorporates changes resulting from the completion of the LAW DSA, 24590-LAW-DSA-NS-18-0001 and incorporates changes to responsible organizations for validation of requirements as identified in 24590-LAW-SYDR-LFP-0001.

Remove all DOORS unique identifiers (DUIs) from view as DUIs are to be maintained in the native document only.

Supersedes Change Document ☒ Yes ☐ No Document # 24590-LAW-3ZN-LFP-00002

REQUIREMENTS REVIEW

Client Approval Required	☐ Yes ☒ No	Interface Resolution Required *	☐ Yes ☒ No

Address any "yes" answers in the description

DESCRIPTION OF CHANGE

Remove all DOORS unique identifiers (DUIs) from view that are in the following format with (x) representing all values specific to each DUI - [ID : X]. DUIs supporting this SDDCN have been hidden in the native file as they are not to be displayed in the issued document.

The following changes are added (underlined) or deleted (~~strikethrough~~) and are provided in the attachment.

The change content falls into the following categories.

1. Incorporation of DSA changes into the SDD. These changes supersede the content provided in 24590-LAW-3ZN-LFP-00002, which incorporated changes to the PDSA prior to it being superseded by the DSA.
2. Incorporation of changes as necessary to support closure of EIE's identified above.
3. Miscellaneous changes to align with updated information.

System Design Description Change Notice

CHANGE DOCUMENT NO.
24590-LAW-3ZN-LFP-00003

JOB NO.	TITLE FOR CHANGE NOTICE
24590	Updates to LFP\LCP SDD to Align with DSA

ORIGINATOR	CHECKER
Systems Engineering – Jerid Mauss	Lucie Roy

Validation:	See Attached	See Attached		
	Organization/Area of Responsibility	*Print/Type Name*	*Signature*	*Date*
Concurrence:	Manager of Engineering	Ian Milgate		6/14/18
	Title	*Print/Type Name*	*Signature*	*Date*
Concurrence:	N/A	N/A	N/A	
	Title	*Print/Type Name*	*Signature*	*Date*
Approval:	Systems Engineering Manager	Sarah Barker		6-19-18
	Title	*Print/Type Name*	*Signature*	*Date*

Validation

Signatures below indicate acceptance of the requirements established in Section 3 as the complete and correct set of requirements for the system relative to the requirements sources for which the Requirement Developer is responsible.

Appl.	Requirement Area	Requirement Developer	Signature	Date
☐	Architectural Design			
☐	Civil/Structural Design			
☐	Controls & Instrumentation Design			
☑	Electrical Design & AHJ	Scott Gond	Scott Gond	6/13/18
☐	Fire Protection Engineering			
☐	HVAC Design			
☐	Mechanical Handling Design			
☐	Mechanical Systems Design			
☐	Plant Design			
☐	Process Engineering			
☐	Interface (External)			
☐	Interface (Internal)			
☐	System Functions and Requirements			
☐	Equipment Environmental Qualification			
☐	Materials Engineering / Technology			
☐	Plant Software Design			
☐	Environmental Permitting (ESH)			
☑	Nuclear Safety Engineering	Kraig Wendt see NSE statement below		
☐	Criticality Safety			
☐	Radiological Engineering			
☐	Industrial Safety/Hygiene (ESH)			
☐	Mission (WTP Contract functional/ performance rqmts)			
☐	Operations Requirements Document (Plant Ops)			
☐	Quality Assurance			
☐	Safeguards & Security			
☐	Startup			
☐	Transportation & Logistics			

* Validation not required for alpha/preliminary design description documents.

NSE has no further comments – all previous NSE comments provided are resolved; the LAW DSA requirements are correct. The subject SDD does not need SE documentation as the SDD is a precursor/preliminary document to the actual design change. N/A- 10 item 2 and N/A-08. *K. Wendt*

Reviewed No Comments ☑
By: Kraig Wendt - kmwendt
Org Name: BNI
Placed: Jun 13, 2018

1.5 Acronyms and System Designators

1.5.1 Acronyms

A	analysis
ADS	air displacement slurry
ALARA	as low as reasonably achievable
ASME	American Society of Mechanical Engineers
BOD	Basis of Design
CCN	correspondence control number
COM	commissioning
CON	construction
CRV	concentrate receipt vessel
CTN	component tag number
D&D	decontamination and decommissioning
DA	Design Authority
DFLAW	Direct Feed Low Activity Waste
DIW	demineralized water
DOE	US Department of Energy
DSA	documented safety analysis
DST	double-shell tank
DVR	design verification report
EMF	effluent management facility
ENG	engineering
EPC	engineering, procurement, and construction
EQP	equipment qualification package
FCR	facility control room
GFC	glass forming chemical
HEPA	high efficiency particulate air (filter)
HLW	High-Level Waste (Facility)
I	inspection
ICD	interface control document
ICN	integrated control network
ILAW	immobilized low-activity waste
LAW	Low-Activity Waste (Facility)
LDB	leak detection box
LFL	lower flammability limit
LIMS	laboratory information management system
MAR	material at risk
MCC	motor control center

MFPV	melter feed preparation vessels
MFV	melter feed vessels
MOC	material of construction
MR	material requisition
MTG	metric tons of glass
ORD	Operations Requirements Document
ORP	Office of River Protection
P&ID	piping and instrumentation diagram
PAM	post-accident monitoring
PCT	product consistency test
PIBOD	Process Inputs Basis of Design
PDSA	preliminary documented safety analysis
PT	Pretreatment (Facility)
R	review
REC	receiving
RVM	requirement verification matrix
SBS	submerged bed scrubber
SC	safety class
SDD	system design description
SIS	safety instrumented system
SQR	supplier quality representative
SRD	Safety Requirements Document
SS	safety significant
SSC	structures, systems, or components
SU	startup
SUB	subcontractor
SUP	supplier
T	test
TLAW	treated low activity waste
TOC	Tank Operations Contractor
TSR	technical safety requirement
VHT	vapor hydration test
WAC	Washington Administrative Code
WLF	water line flush
WSF	water screen flush
WTP	Hanford Tank Waste Treatment and Immobilization Plant

1.5.2 System Designators

AHL	analytical hotcell laboratory equipment system

Table 2-1 Functional Analysis and Crosswalk to Requirements

Reference	Functional Analysis Description	Requirement Section No.
J.2.1	~~ADS Pump~~ Interlocks – The ~~ADS pump~~ interlocks ~~terminate~~shut off ~~melter~~ feed to the affected melter(s), terminate sources of pressurization or terminate sources contributing to offgas generation in the affected melter(s) upon detection of: • Melter Plenum High Pressure (Melter 1 and Melter 2)~~(Reduced Vacuum)~~ • ~~Melter~~ Offgas Exhauster 1A/1B/1C Shaft Seal ~~Backup~~ Air Supply Low Pressure • ~~MFV High Liquid Level~~ • ~~Melter~~ Lid ~~Cavity~~ Cooling Water High Temperature (Melter 1 and Melter 2) • ~~Submegred bed scrubber (~~SBS~~)~~ Low ~~or High Liquid~~ Level (Melter 1 and Melter 2) • ~~LAW secondary offgas/vessel vent process system (LVP) HEPA Filter High Differential Pressure~~ • ~~Mercury Mitigation Skid (Carbon Bed Adsorbers) High Differential CO/CO_2~~ • ~~Caustic Scrubber Recirculation Line Low Flow~~ • Offgas Header High and Low Pressure~~LVP Header Low Vacuum~~ • Loss of Normal Power to Safety Equipment • Melter Annulus High Pressure (Melter 1 and Melter 2) • Lid Cooling Low Flow (Melter 1 and Melter 2) • SBS High Level (Melter 1 and Melter 2)	3.8.2.2.1 3.8.2.2.2 ~~3.8.2.2.3~~ 3.8.2.2.4 3.8.2.2.5 ~~3.8.2.2.6~~ ~~3.8.2.2.7~~ ~~3.8.2.2.8~~ 3.8.2.2.9 3.8.2.2.10, 3.8.2.2.11 3.8.2.2.12 3.8.2.2.13 3.8.3.1
K.	**Remove/Install Equipment**	N/A
K.1	Remove/Install Equipment – The radioactive solid waste handling (RWH) system provides lifting for removal and installation of heavy LCP/LFP equipment such as agitators and pumps.	N/A

2.2 System Classification

The LFP and LCP contain components with the following classifications/designations:

- ☐ Safety Class
- ☒ Safety Significant
- ☒ Dangerous Waste Permit affecting
- ☐ Air Permit affecting
- ☐ Waste Acceptance Impacting
- ☒ General

2.3 Basic Operational Overview

A functional description of the system is provided in Sections 2 and 2.1, which provide the context diagram for the system, interfaces with other systems, a simplified system diagram, a functional block diagram, and descriptions of the system functions. A basic operational system overview is described in this section. Detailed operational information is provided in Section 4.

3.4.1.6 Design (Operating) Life

Requirement: Non-replaceable, non-maintainable, permanent LCP and LFP system plant equipment shall be designed to last the life of the facility (40 years). Design life of equipment shall consider the effects of chemical, radiological and thermal exposure. [Sections 11.1.1, 11.7.4, BOD] [Section 14.2, ORD].

Basis Discussion: Equipment and material selection is based on proven performance, value engineering principles, and fit-for-function principles. The selection of equipment and materials is further addressed in detail as the design progresses. Equipment design needs to consider the routine environmental exposures under normal operations for non-safety equipment; safety and post-accident monitoring (PAM) equipment also considers abnormal and emergency exposures—this minimizes the need for equipment maintenance, exposure, and radiological waste generation in radiological areas.

[ALARA]

Verification: Verification is expected to be achieved through the following:

Verif. Method	Verif. By	Plan	Notes/Comments
R	**ENG**	Review design to verify design life of non-replaceable, non-maintainable SSCs.	~~May be documented in an assessment/evaluation.~~ ~~Safety and PAM SSCs are to be verified through review of the equipment qualification packages.~~

3.4.1.7 Materials of Construction and Erosion/Corrosion Design Parameters

Requirement: The LCP and LFP shall be designed to include adequate allowance for erosion/corrosion and use of materials of construction in accordance with Appendix H of the SRD. [Appendix H, Section 5, SRD] [Section 11.9, BOD].

Basis Discussion: The allowance for erosion/corrosion and applicable materials of construction are limited to those components that come into contact with the process fluids and that are required to maintain confinement/containment of those process fluids. Materials of construction that can withstand the erosive/corrosive low-activity waste effluents and chemicals are selected. The materials for the LAW Facility LCP and LFP equipment and components should be selected based on the stream data presented in the process corrosion data sheet report. If vessel washing via internal spray mechanisms is needed to prevent or minimize corrosion, the operational limitations are~~shall be~~ identified in the vessel corrosion evaluations (N1D-LFP documents). Refer to ~~Tables A-26, B-16, B-17;~~ 24590-WTP-DB-PET-17~~09~~-001, Process Inputs Basis of Design (PIBOD), for LAW and EMF; and 24590-WTP-M4C-V11T-00024, WTP Process Flowsheet Mass & Energy Balance Analysis for Input to Material Selection Assessments, for the fluid characteristics of the process streams.

The LCP and LFP piping and vessels are accounted for in the erosion/corrosion analyses and are fabricated with materials of construction that can withstand the radioactive, thermal, and erosive/corrosive environment caused by the material.

Details of the allowed materials and corrosion allowances can be found in:

•24590-LAW-N1D-LCP-00001, LCP-VSL-00001 and LCP-VSL-00002 (LAW) - LAW Concentrate Receipt Vessel

•24590-LAW-N1D-LCP-00002, LCP-PMP-00001A/B and LCP-PMP-00002A/B (LAW) Concentrate Receipt Pump

•24590-LAW-N1D-LFP-00004, LFP-VSL-00001 and LFP-VSL-00003 (LAW) Melter 1 and 2 Feed Preparation Vessels

•24590-LAW-N1D-LFP-00006, LFP-VSL-00002 and LFP-VSL-00004 (LAW) Melter 1 and 2 Feed Vessels

•24590-LAW-N1D-LFP-00001, LFP-HX-00001/2/3/4 (LAW) Cooling Jacket

[ALARA]

Verification: Verification is expected to be achieved through the following:

Verif. Method	Verif. By	Plan	Notes/Comments
A/I	**ENG**	Perform an analysis/inspection of materials used in the LAW Facility LCP and LFP which are in contact with, and are required to maintain confinement or containment of, the process fluids to verify that they are acceptable for use in the operating environment and have adequate erosion and corrosion allowances.	
R	**ENG**	Review design components used in the LAW Facility LCP and LFP which are in contact with, and are required to maintain confinement or containment of, the process fluids for concurrence with analysis.	

3.4.1.8 Room Environment Conditions for Safety SSCs

Requirement: The SSCs in the LAW Facility LFP credited with safety function(s) ~~and post accident monitoring instruments~~ shall be designed and qualified to perform their safety function(s) as intended in the environment conditions associated with the events for which they are intended to respond. Safety structures, systems, and components designated as Safety Class or Safety Significant shall be designed and qualified to function as intended in the environments associated with the events for which they are intended to respond. Environmental qualification shall be to IEEE 323-83. The effects of aging on normal and abnormal functioning shall be considered in design and qualification using IEEE 323-83. For LBL Facilities only SS SSCs required to operate in harsh environments and credited for radiological and/or chemical hazards require qualification to IEEE 323-83~~, inclusive of aging effects, throughout their qualified life~~. [Safety Criterion 4.1-3, Safety Criterion 4.4-1, SRD] [Section 11.7.3, BOD]~~.~~

Basis Discussion: Safety SSCs designated as safety significant (SS) are designed ~~and qualified~~ to function as intended in the room environment conditions associated with the events for which they are intended to respond. The effects of aging on normal and abnormal functioning are considered in design and qualification. *LAW Room Environment Data Sheet*, 24590-LAW-U0D-W16T-00001 identifies environmental conditions for rooms that house safety SSCs. ~~24590-LAW-RPT-ENS-12-001, *LAW Post Accident Monitoring Report* identifies PAM instrumentation.~~

[ALARA]

Verification: Verification is expected to be achieved through the following:

Verif. Method	Verif. By	Plan	Notes/Comments
A/T	**ENG**	Perform analysis or testing to verify the ability of the SSCs credited with a safety function ~~and post accident monitoring instruments~~ to withstand the environmental	~~Document in equipment qualification package. See *LAW Room Environment*~~

Verif. Method	Verif. By	Plan	Notes/Comments
		~~service~~ conditions for which they are intended to respond.~~specified.~~	~~*Data Sheet*, 24590-LAW-U0D-W16T-00001, for room environment conditions.~~
R	**ENG**	Review the design to verify that SS SSCs required to operate in harsh environments are environmentally qualified to IEEE 323-83 inclusive of the effects of aging on normal and abnormal functioning.	
R	**ENG**	Review the design to verify conformance to the as-tested or as-analyzed configuration.	~~Document in an assessment/report or equipment qualification package (EQP).~~

3.4.1.9 ~~Protection of Safety Equipment from Water Spray~~Deleted

~~**Requirements:** SS instrumentation and electrical components that could be exposed to a water spray from the nonseismic failure of nearby water lines (e.g., water lines that are not Safety and have no intervening splash barriers) must be designed to experience the water spray without the facility losing the required safety function. [Section 4.4.19.3, PDSA – LAW Facility].~~

~~**Basis Discussion:** Protecting credited SSCs from a loss of functionality due to wetting is accomplished by designing the equipment to survive exposure to water without loss of function (e.g., by designing the equipment to appropriate NEMA ratings). NEMA 250 is the applicable standard for those instruments and electrical components that must survive a water spray from nearby water lines without loss of safety function. NEMA ratings follow DN062807-1 Rev 2, Guidance for Enclosure NEMA Rating Selection.~~

~~**Verification:** Verification is expected to be achieved through the following:~~

~~Verif. Method~~	~~Verif. By~~	~~Plan~~	~~Notes/Comments~~
~~**A**~~	~~**ENG**~~	~~Determine which SS instruments are subject to water spray based on the SS proximity to nearby waterlines.~~	
~~**R**~~	~~**ENG**~~	~~Review design to verify that these instrument enclosure are designed according to standard NEMA 250.~~	

3.4.1.10 Room Environment Conditions for Non-Safety SSCs

Requirement: The LAW Facility LCP and LFP equipment and components tagged non-safety shall be designed to operate and withstand the internal environment conditions of the LAW Facility. [Table 12-1, BOD] [Sections 11.16, 16.1, ORD].

Basis Discussion: Non-safety SSCs are designed to function as intended in the room environment conditions associated with their location.

[ALARA]

Verification: Verification is expected to be achieved through the following:

Verif. Method	Verif. By	Plan	Notes/Comments
R	**ENG**	Review of design of non-safety, active SSCs to verify compliance with BOD Table 12-1 conditions.	May be documented in an assessment/evaluation report.

3.4.1.11 Seismic Design

Requirement: The LCP and LFP equipment, including PAM, shall be designed and qualified to function as intended for seismic conditions in accordance with the table below: ~~[Sections 4.4.19.3, PDSA - LAW Facility]~~[Section 11.7.3, BOD] [Safety Criterion 4.1-3, 4.3-4, SRD] [Section 4.4.2.1.3, 4.4.2.1.4, 4.4.2.2.3, 4.4.2.2.4, 4.4.4.1.1.3, 4.4.4.1.1.4, 4.4.4.1.2.3, 4.4.4.1.2.4, 4.4.4.1.1.3, 4.4.4.1.1.4, 4.4.4.1.2.3, 4.4.4.1.2.4, 4.4.4.1.3.3, 4.4.4.1.3.4, 4.4.4.1.5.3, 4.4.4.1.5.4, 4.4.4.1.6.3, 4.4.4.1.6.4, 4.4.4.1.9.3, 4.4.4.1.9.4, 4.4.4.1.10.3, 4.4.4.1.10.4, 4.4.4.1.21.3, 4.4.4.1.21.4, 4.4.4.1.22.3, 4.4.4.1.22.4, 4.4.4.1.25.3, 4.4.4.1.25.4 and App. A, Table A-1 LAW-DSA]~~.

Table 3-2 LCP and LFP Seismic Design Categories

Description	Seismic Category	Reference
~~Melter Feed Vessel Safety Level Instrumentation~~	~~**SC-III**~~	~~Section 4.4.19.3 PDSA - LAW Facility~~
~~Melter Feed ADS Pump Water and Air Supply Isolation Valves~~	~~**SC-III**~~	~~Section 4.4.19.3 PDSA - LAW Facility~~
LCP/LFP Coaxial Outer Piping – in areas outside of C5V ventilated rooms and secondary confinement.	**SC-III**	Section 4.4.2.1.3, 4.4.2.1.4 and App. A, Table A-1 LAW-DSA
LCP/LFP Vessels	**SC-III**	Section 4.4.2.2.3, 4.4.2.2.4 and App. A, Table A-1 LAW-DSA
Melter Plenum High Pressure Interlocks (Melter 1 and Melter 2)	**SC-III**	Section 4.4.4.1.1.3, 4.4.4.1.1.4 and App. A, Table A-1 LAW-DSA
Lid Cooling Low Flow Interlocks (Melter 1 and Melter 2)	**SC-III**	Section 4.4.4.1.2.3, 4.4.4.1.2.4 and App. A, Table A-1 LAW-DSA
Lid Cooling Water High Temperature Interlocks (Melter 1 and Melter 2)	**SC-III**	Section 4.4.4.1.3.3, 4.4.4.1.3.4 and App. A, Table A-1 LAW-DSA
SBS Low Level Interlocks (Melter 1 and Melter 2)	**SC-III**	Section 4.4.4.1.5.3, 4.4.4.1.5.4 and App. A, Table A-1 LAW-DSA
SBS High Level Interlocks (Melter 1 and Melter 2)	**SC-III**	Section 4.4.4.1.6.3, 4.4.4.1.6.4 and App. A, Table A-1 LAW-DSA
Offgas Header High and Low Pressure Interlocks (Melter 1 and Melter 2)	**SC-III**	Section 4.4.4.1.9.3, 4.4.4.1.9.4 and 4.4.4.1.10.3, 4.4.4.1.10.4 and App. A, Table A-1 LAW-DSA
Offgas Exhauster 1A/1B/1C Shaft Seal Air Supply Low Pressure Interlock	**SC-III**	Section 4.4.4.1.21.3, 4.4.4.1.21.4 and App. A, Table A-1 LAW-DSA
Loss of Normal Power to Safety Equipment Interlock	**SC-III**	Section 4.4.4.1.22.3, 4.4.4.1.22.4 and App. A, Table A-1 LAW-DSA
Melter Annulus High Pressure Interlocks (Melter 1 and Melter 2)	**SC-III**	Section 4.4.4.1.25.3, 4.4.4.1.25.4 and App. A, Table A-1 LAW-DSA
~~PAM instruments~~	~~**Seismic category designations per PAM report***~~	~~Safety Criterion 4.3-4, SRD~~

~~*24590-LAW-RPT-ENS-12-001, *LAW Post Accident Monitoring Report*~~

Basis Discussion: ~~Section 2.4.12 of 24590-WTP-PSAR-ESH-01-002-01, *Preliminary Documented Safety Analysis to Support Construction Authorization; General Information*, states "All components and parts of the equipment that provide or contribute to the safety functions and accident monitoring functions, including~~

~~equipment supports and anchorage, shall be qualified accordingly." This qualification ensures SSCs meet the designated seismic design requirements.~~ Safety Criterion 4.1-3 in the safety requirements document (SRD) details the equivalence of the WTP seismic category to the seismic performance category of DOE-STD-1020-94, *Natural Phenomena Hazards Design and Evaluation Criterial for Department of Energy Facilities.* The SRD also states that SSCs designated as safety SSCs be designed to withstand the effects of natural phenomena hazard events (e.g., earthquakes, wind, and floods) without loss of capability to perform specified safety functions.

Verification: Verification is expected to be achieved through the following:

Verif. Method	Verif. By	Plan	Notes/Comments
A/T	**ENG/ SUP**	~~Analysis or test~~ P~~p~~erform~~ed~~ an analysis or test of the ~~on~~ equipment listed in Table 3-2 to demonstrate capability to withstand the effects of a seismic event.	~~This is expected to be documented in the EQPs.~~
R	**ENG**	Review design to verify equipment and piping listed in Table 3-2 demonstrates capability to withstand the seismic event.~~conformance to the as-tested/as-analyzed configuration.~~	~~May be accomplished by EQP or separate assessment/evaluation.~~

3.4.1.12 Seismic Design for Interaction Effects

Requirement: Interaction effects shall be considered when determining the seismic category of individual items and, where an adverse seismic interaction with safety class (SC) or SS equipment exists, adequate measures shall be taken to preclude the adverse interaction. ~~Table 3-3 lists items that have already been determined to have an adverse seismic interaction with SC or SS components.~~ [Criterion 4.1-3, SRD] [Section 10.2.15, BOD] ~~[Table 3A-7, PDSA - LAW Facility].~~

Table 3-3 ~~**LCP and LFP Seismic Design Categories**~~**Not Used**

~~Description~~	~~Vessel~~	~~Seismic Category~~	~~Reference~~
~~Anchorages (NPH interaction effects)~~	~~LCP-VSL-00001/2~~	~~SC-III/SC-IV~~	~~Table 3A-7 LAW PDSA~~
	~~LFP-VSL-00001/2/3/4~~	~~SC-III/SC-IV~~	

Basis Discussion: Equipment that is non-safety may be identified as having a potential for adverse interaction with safety equipment during a seismic event in accordance with 24590-WTP-GPG-ENG-033, *Evaluation for Seismic Interaction Effects*. Where a resolution strategy is selected to increase the seismic category of the source SSC to protect the safety (target) SSC, the resulting seismic category of the equipment may be greater than SC-IV. In those cases, the equipment design is verified to meet the higher seismic performance category such that the target SSC is protected. Seismic category IV includes non-safety SSCs that required seismic protection per the Uniform Building Code (UBC). Seismic Category V items include lockers, bicycles racks, desks, etc. per 24590-WTP-GPG-M-036, *Subcomponent Safety Classification Process.*

~~Based on 24590-WTP-PSAR-ESH-01-002-01, *Preliminary Documented Safety Analysis to Support Construction Authorization; General Information*, seismic category IV piping are categorized as follows: i) non-safety piping and without an inventory of radioactive or hazardous material, but require seismic protection. ii) safety piping, but without seismic safety function. In accordance with 24590-WTP-GPG-M-036, *Subcomponent Safety Classification Process*, seismic category IV are SSCs that do not provide primary confinement of significant~~

~~inventories of radioactive materials. Seismic category IV includes non-safety SSCs that required seismic protection per the Uniform Building Code (UBC).~~

~~As discussed in 24590-WTP-PSAR-ESH-01-002-01, *Preliminary Documented Safety Analysis to Support Construction Authorization; General Information*, Seismic Category V piping does not require any seismic consideration. Seismic Category V items include lockers, bicycles racks, desks, etc. per 24590-WTP-GPG-M-036, *Subcomponent Safety Classification Process*.~~

Verification: Verification is expected to be achieved through:

Verif. Method	Verif. By	Plan	Notes/Comments
R	**ENG**	Perform an evaluation of the LAW Facility LCP and LFP system to verify seismic categorization of equipment based on interaction effects per 24590-WTP-GPG-ENG-033.	
A/T	**ENG/ SUP**	Analysis or testing performed on SSCs to demonstrate the ability to withstand the seismic loadings for their respective seismic categories to the extent necessary to prevent interactions.	~~Documented in an Equipment Seismic Qualification (ESQ) Review Form or supplier seismic design report.~~
R	**ENG**	Review design to verify conformance to the as-tested/as-analyzed configuration.	

3.4.2 Nuclear Safety, ALARA, Environmental, and Other Regulatory Requirements

The WTP dangerous waste permit requirements for leak detection on the LCP transfer line from the PT Facility (baseline configuration) and from TOC LAWPS (DFLAW configuration) are included in the TCP SDD and DFLAW FDD/SDD, respectively. The LCP and LFP sump leak detection requirements are included in LAW Facility design description and/or RLD SDD. WTP air permit requirements are not applicable to LCP and LFP.

3.4.2.1 Safety Classifications~~Designations~~

Requirement: SSCs shall be classified~~designated~~ as safety SSCs in accordance with the table below: [Safety Criterion 4.1-2, 4.1-3, 4.4-1, SRD] ~~[Section 4.4.19.3, PDSA – LAW Facility].~~ [Section 4.4.2.1, 4.4.2.2, 4.4.4.1.1,

4.4.4.1.2.1, 4.4.4.1.3.1, 4.4.4.1.5.1, 4.4.4.1.6.1, 4.4.4.1.9.1, 4.4.4.1.10.1, 4.4.4.1.21.1, 4.4.4.1.22.1, 4.4.4.1.25.1, Table 4.4-61 and Appendix A, Table A-1, LAW-DSA]

Table 3-4 LCP and LFP Safety Classifications~~Designations~~

~~Equipment/ Component Description~~SSCs	Safety Function	Safety Classification ~~Designation~~	References
~~LFP-YV-1207~~ ~~LFP-YV-1208~~ ~~LFP-YV-2207~~ ~~LFP-YV-2208~~ ~~Melter Feed ADS Pump Water and Air Supply Isolation Valves~~	~~The ADS pump interlocks must isolate the demineralized water and plant service air feeds to the ADS pumps within the affected melter feed vessel, which terminates feed to the melter whenever a high-liquid level is detected.~~	~~SS~~	~~Section 4.4.19.3, PDSA – LAW Facility~~
~~LFP-LT-1145~~ ~~LFP-LT-2145~~ ~~MFV Level Instrumentation~~	~~The melter feed vessel level instrumentation must monitor melter feed vessel level and, if high level is detected, provide an actuation signal to the associated ADS pump interlocks.~~	~~SS~~	~~Section 4.4.19.3, PDSA – LAW Facility~~
LCP/LFP Coaxial Outer Piping	Mitigates the consequences of a release of chemically hazardous material by providing a barrier to caustic solution spray or spill releases.	SS	Section 4.4.2.1 and App. A, Table A-1 LAW-DSA
LCP/LFP Vessels	LCP/LFP vessels (LCP-VSL-00001/2 and LFP-VSL-00001/2/3/4) reduce the probability of a release of radioactive and chemically hazardous material by providing confinement of liquid.	SS	Section 4.4.2.2 and App. A, Table A-1 LAW-DSA
LFP-YV-1208 LFP-YV-1212 Melter 1 Feed Pump Plant Air Supply Valve	Support Interlock Safety Functions	SS	Table 4.4-61
LFP-YV-2208 LFP-YV-2212 Melter 2 Feed Pump Plant Air Supply Valve	Support Interlock Safety Functions	SS	Table 4.4-61
LFP-YV-1207 LFP-YV-1211 Melter 1 Feed Pump Demin Water Supply Valve	Support Interlock Safety Functions	SS	Table 4.4-61
LFP-YV-2207 LFP-YV-2211 Melter 2 Feed Pump Demin Water Supply Valve	Support Interlock Safety Functions	SS	Table 4.4-61

Table 3-4 LCP and LFP Safety Classifications~~Designations~~

~~Equipment/ Component Description~~SSCs	Safety Function	Safety Classification ~~Designation~~	References
Melter Plenum High Pressure Interlocks (Melter 1 and Melter 2)	1. The interlock limits the release of radioactive and chemically hazardous material by reducing melter offgas load to restore plenum vacuum in the event vacuum is degraded. 2. The interlock limits the release of radioactive and chemically hazardous material by reducing the material at risk in the affected melter in the event that control signal or air to an SIS component is lost. 3. The interlock reduces the probability of a release of radioactive and chemically hazardous material by preventing the final control elements of the SIS from failing in a manner that would cause a release.	SS	Section 4.4.4.1.1 and App. A, Table A-1 LAW-DSA
Lid Cooling Low Flow Interlocks (Melter 1 and Melter 2)	1. The interlock limits the release of radioactive and chemically hazardous material by reducing the material at risk in the affected melter in the event of a degradation of lid cooling ability. 2. Reduces the probability of a release of radioactive and chemically hazardous material by preventing the final control elements of the SIS from failing in a manner that would cause a release.	SS	Section 4.4.4.1.2.1 and App. A, Table A-1 LAW-DSA
Lid Cooling Water High Temperature Interlocks (Melter 1 and Melter 2)	1. The interlock limits the release of radioactive and chemically hazardous material by reducing the material at risk in the affected melter in the event of a degradation of lid cooling ability. 2. Reduces the probability of a release of radioactive and chemically hazardous material by preventing the final control elements of the SIS from failing in a manner that would cause a release.	SS	Section 4.4.4.1.3.1 and App. A, Table A-1 LAW-DSA

Table 3-4 LCP and LFP Safety Classifications~~Designations~~

~~Equipment/ Component Description~~SSCs	Safety Function	Safety Classification ~~Designation~~	References
SBS Low Level Interlocks (Melter 1 and Melter 2)	1. The interlock reduces the probability of a release of radioactive and chemically hazardous material by preventing a failure of the offgas system confinement boundary caused by high offgas temperatures. 2. Reduces the probability of a release of radioactive and chemically hazardous material by preventing the final control elements of the SIS from failing in a manner that would cause a release. 3. The interlock mitigates the consequences of a release of radioactive and chemically hazardous material by providing a hydraulic seal to isolate offgas flow from the melter to beyond the SBS upon loss of system vacuum.	SS	Section 4.4.4.1.5.1 and App. A, Table A-1 LAW-DSA
SBS High Level Interlocks (Melter 1 and Melter 2)	1. Reduces the probability of a release of radioactive and chemically hazardous material by limiting the introduction of water into the SBS 2. Reduces the probability of a release of radioactive and chemically hazardous material by preventing the final control elements of the SIS from failing in a manner that would cause a release	SS	Section 4.4.4.1.6.1 and App. A, Table A-1 LAW-DSA
Offgas Header High and Low Pressure Interlock (Melter 1 and Melter 2)	1. The interlock limits the release of radioactive and chemically hazardous material by reducing sources of offgas and reconfiguring the offgas system to maintain melter plenum vacuum in the event of high pressure in the LVP header 2. Reduces the probability of a release of radioactive and chemically hazardous material by preventing the final control elements of the SIS from failing in a manner that would cause a release	SS	Section 4.4.4.1.9.1 and 4.4.4.1.10.1 LAW-DSA

Table 3-4 LCP and LFP Safety Classifications~~Designations~~

~~Equipment/ Component Description~~SSCs	Safety Function	Safety Classification ~~Designation~~	References
Offgas Exhauster 1A/1B/1C Shaft Seal Air Supply Low Pressure Interlock	1. The interlock limits the release of radioactive and chemically hazardous material through the exhauster shaft seals by supplying regulated back-up air pressure to the exhauster shaft seals 2. Reduces the probability of a release of radioactive and chemically hazardous material by preventing the final control elements of the SIS from failing in a manner that would cause a release	SS	Section 4.4.4.1.21.1 and App. A, Table A-1 LAW-DSA
Loss of Normal Power to Safety Equipment Interlock	1. The interlock limits the release of radioactive and chemically hazardous material by reconfiguring the offgas system to maintain melter plenum vacuum in the event of loss of normal power to the safety equipment, primarily exhausters 2. Reduces the probability of a release of radioactive and chemically hazardous material by preventing the final control elements of the SIS from failing in a manner that would cause a release	SS	Section 4.4.4.1.22.1 and App. A, Table A-1 LAW-DSA
Melter Annulus High Pressure Interlocks (Melter 1 and Melter 2)	1. Mitigates the consequences of a melter offgas release by ensuring that the C5V system is providing sufficient negative pressure in the annulus and process cell while the melter is being fed. 2. Reduces the probability of a release of radioactive and chemically hazardous material by preventing the final control elements of the SIS from failing in a manner that would cause a release.	SS	Section 4.4.4.1.25.1 and App. A, Table A-1 LAW-DSA

Basis Discussion: Safety ~~designation~~classification includes SSCs which support these components.

Verification: Verification is expected to be achieved through the following:

Verif. Method	Verif. By	Plan	Notes/Comments
R	ENG	Review of design for safety classification alignment. ~~designations as identified in the Equipment Qualification Datasheet.~~	~~May be accomplished by EQP and/or design verification report (DVR).~~

3.4.3 System Interface Requirements

Requirements associated with specific system interfaces are discussed in the subsequent requirement sections 3.X.3 titled "System Interface Requirements" as applicable.

3.4.4.5 Process Valve Actuator Speed Limitation

Verification: Verification is expected to be achieved through the following:

Verif. Method	Verif. By	Plan	Notes/Comments
~~A~~	~~ENG~~	~~Perform an analysis to determine which automatic valves are at risk of water hammer.~~	
R	ENG	Review design to verify it specifies slow closing actuators for automatic valves at risk of water hammer.	~~Evaluate with startup (SU) and commissioning (COM) and document in an evaluation/assessment.~~

3.4.4.6 Flush Mounted Instrumentation

Requirement: Instrumentation installed in piping with solids shall be flush-mounted. [Section 11.16, ORD].

Basis Discussion: Flush mounting prevents solids from plugging and the instrumentation from providing erroneous indications as it does not create an obstruction of flow where solids could accumulate. For example, transducers installed in a short pipe stub would fill with solids.

Verification: Verification is expected to be achieved through the following:

Verif. Method	Verif. By	Plan	Notes/Comments
R	ENG	Review design to verify instrumentation installed in LCP/LFP process piping is flush mounted.	

3.4.4.7 Corrosion Protection

Requirement: Underground metallic piping systems and fittings shall be protected from external and stray current corrosion. Tanks and vessels shall be protected from internal and external corrosion. [Section 11.1.1.1, BOD].

Basis Discussion: Corrosion protection features of tanks, vessels, and underground metallic piping systems follow National Association of Corrosion Engineers (NACE) standards as identified in the BOD. Requirements for cathodic protection systems are contained within 24590-WTP-3YD-CPE-00001, *System Description for Waste Treatment Plant Cathodic Protection (CPE)*.

Verification: Verification is expected to be achieved through the following:

Verif. Method	Verif. By	Plan	Notes/Comments
R	ENG	Review design to verify that LCP/LFP underground metallic piping systems and fittings are protected from external and stray current corrosion.	
R	ENG	Review design to verify LCP/LFP tanks and vessels are protected from internal and external corrosion.	

3.5.4 Other Technical, Specialty, Operations and Maintenance Requirements

3.5.4.1 Vessel Washing

Requirement: The CRVs, MFPVs, and MFVs shall be designed with internal spray mechanisms to wash the vessel walls and internals. [Sections 11.7.4, 16.4.8, BOD] [Sections 14.2, 20.0, ORD] (B.2).

Basis Discussion: The internal spray mechanisms used to wash the LCP and LFP vessels help to facilitate the removal of contamination and prevent the buildup of solids on the vessel walls. The LCP and LFP vessels are to be cleaned prior to removal for decommissioning and decontamination or maintenance/replacement activities.

[ALARA]

Verification: Verification is expected to be achieved through the following:

Verif. Method	Verif. By	Plan	Notes/Comments
R	ENG	Review of design for incorporation of internal spray mechanisms.	

3.5.4.2 Agitation

3.5.4.2.1 General Agitation/Mixing

Requirement: The LCP and LFP system shall be capable of mixing the vessel contents during the process of receiving, sampling, storing, and transferring waste. [Section 6.7.3, BOD] [Section 14.14, ORD] (A.2, A.7).

Basis Discussion: Agitation of the LCP and LFP vessels is also required to collect a representative sample of vessel contents.

Verification: Verification is expected to be achieved through the following:

Verif. Method	Verif. By	Plan	Notes/Comments
R	ENG	Review design to verify that agitation capability is incorporated into the design.	

3.5.4.3 Vessel Ventilation

Requirement: The ancillary equipment and vessels shall be designed to prevent the accumulation of hydrogen gas levels above the lower flammability limit (LFL). [Section III.10.H.1.a.xxviii, Dangerous Waste Portion of RCRA Permit] (G.1, H.1).

Basis Discussion: ~~The lower flammability limit is 4 vol % H_2, at 25 ºC. Section 3.3.3.1 of Preliminary Documented Safety Analysis to Support Construction Authorization; LAW Facility Specific Information (PDSA - LAW Facility) states:~~

~~"Accumulation of flammable gasses such as hydrogen in the vapor space of the concentrate receipt vessels or melter feed vessels can occur as a result of thermolysis (e.g., CSD-LLCP/N0005 and CSD-LLFP/N0003), resulting in an explosion if ignited."~~Vessel ventilation design supports application of hydrogen mitigation.

Verification: Verification is expected to be achieved through the following:

Verif. Method	Verif. By	Plan	Notes/Comments
A	ENG	Perform an analysis to determine generation rate of hydrogen for LFP and LCP vessels and ensure that the design maintains the hydrogen levels below the LFL.	~~May be documented in an assessment/evaluation report.~~
R	ENG	Review design to verify conformance with the analysis.	

3.6 Piping Requirements

3.6.1 Mission and Functional / Performance Requirements (Including States/Modes)

3.6.1.1 Piping Design

3.6.1.1.1 Deleted

3.6.1.1.2 Siphon Prevention

Requirement: The piping design shall include necessary means to prevent siphoning or backflow. [Section 5.1.2, BOD] [Section 7.1, ORD].

Basis Discussion: Systems containing hazardous material is provided with suitable isolation provisions to prevent diffusion, backflow, or other methods of leakage of the contents to areas where the material is not intended. [ALARA]

Verification: Verification is expected to be achieved through the following:

Verif. Method	Verif. By	Plan	Notes/Comments
R	ENG	Review the piping design for conformance to this requirement.	

3.6.1.1.3 Double-Walled (Coaxial) Piping

Requirement: The LAW concentrate transfer piping from the PT Facility to the LAW Facility shall be an underground, double-walled (coaxial) pipeline. The LAW concentrate transfer piping from the EMF to the LAW Facility shall be an underground, double-walled (coaxial) piping. [Sections 11.2.3, 14.10.1.3, BOD].

Basis Discussion: To provide a dual containment boundary for transferring the LAW concentrate between the PT Facility and LAW Facility while operating in the baseline configuration, double-walled piping is required. Double-walled piping is also required for the portion of the transfer piping from the EMF to the LAW facility that is within the scope of the LCP (i.e., the 5 ft section of transfer pipe from the boundary limit to inside the LAW Facility). The double-walled piping provides secondary containment for transferring waste between facilities when operating in both the baseline and DFLAW configurations. Radioactive liquid transfer lines are double-encased to minimize the potential for release of contamination due to the breach of a process line.

This requirement only applies to LCP piping.

[ALARA]

3.8.2.2 Safety Significant Interlocks

The system design includes the following SS interlocks:

- ADS Pump interlocks

All SS interlocks are performed via the PPJ. System instruments provide inputs to the PPJ. The PPJ evaluates these inputs and when a pre-determined condition is detected, the PPJ actuates final elements to place them into a known safe state.

3.8.2.2.1 ~~Terminate Melter Feed –~~ Melter Plenum High Pressure Interlocks (Melter 1 and Melter 2) ~~(Reduced Vacuum)~~

Requirement: Interlock shall terminate sources of melter pressurization if melter plenum pressure measured by sensing elements LMP-PDT-1528/1529 (Melter 1) or LMP-PDT-2528/2529 (Melter 2) reaches or exceeds -0.1 in w.g. relative to the annulus. Upon detection of high melter plenum pressure, the interlock shall limit offgas generation from the affected melter and support offgas system flow by closing respective ADS air supply valves LFP-YV-1208/-1212 (Melter 1), LFP-YV-2208/-2212 (Melter 2) and water supply valves LFP-YV-1207/-1211 (Melter 1), LFP-YV-2207/-2211 (Melter 2). [Section 4.4.4.1.1.3, 4.4.4.1.1.4, and App. A, Table A-1 LAW-DSA]. (J.2.1) ~~Upon receipt of a high pressure (reduced vacuum) signal from the LMP melter plenum, melter feed shall be terminated to the affected melter. The method of feed termination shall be achieved by simultaneously isolating: [Section 4.4.8.3, PDSA – LAW Facility] (J.2.1).~~

~~1. Air supply to the affected melter feed ADS pumps.~~

~~2. Water supply to the affected melter feed ADS pumps.~~

Basis Discussion: The interlock limits the release of radioactive and chemically hazardous material by reducing melter offgas load to restore plenum vacuum in the event vacuum is degraded.

~~Terminating transfer to the melters when a high pressure setpoint is reached in the melter plenum helps prevent overpressurizing the LAW melter.~~

~~Section 4.4.8.5 of 24590-WTP-PSAR-ESH-01-002-03, *Preliminary Documented Safety Analysis to Support Construction Authorization; LAW Facility* states the following:~~

> ~~"Unlike most other requirements involving the termination of melter feed, a delay in the isolation of demineralized water to the ADS pumps is not allowed. This is because increasing melter pressure represents an immediate challenge to melter confinement, as opposed to many of the other melter feed termination requirements where conditions cause a trip, but a loss of melter depression is not an immediate risk. Line flushing activities, while not expected to be a significant source of melter pressure, are therefore conservatively not allowed."~~

~~[ALARA]~~

Verification: Verification is expected to be achieved through the following:

Verif. Method	Verif. By	Plan	Notes/Comments
R	ENG	Review the design for incorporation of the system specific interlock physical components.	~~Additional verification criteria for this interlock are discussed in the LMP SDD.~~
T	SU/ COM	Perform a test to verify the interlock actuates ADS air and water supply valves to the closed position for the respective melter when melter plenum pressure reaches or exceeds -0.1 in w.g. relative to the annulus.	

3.8.2.2.2 ~~Terminate Melter Feed - Melter~~ Offgas Exhauster 1A/1B/1C Shaft Seal ~~Backup~~ Air Supply Low Pressure Interlock

Requirement: Upon detection of low shaft seal air supply pressure of less than or equal to 90 psig (LVP-PT-0156/-0160/-0164), the interlock shall isolate feed to both melters by closing ADS air supply valves LFP-YV-1208/-1212/-2208/-2212). [Section 4.4.4.1.21.3, 4.4.4.1.21.4, and App. A, Table A-1 LAW-DSA]. (J.2.1)

~~Upon receipt of low pressure signal from the backup bottled air supply to the shaft seal on any of the three offgas exhausters in the LVP, feed to both melters shall be terminated. The method of feed termination shall be achieved by: [Section 4.4.43.3, PDSA - LAW Facility] (J.2.1).~~

1. ~~First isolating air to the melter feed ADS pumps of both melters.~~
2. ~~Followed by the isolation of water (after line flushes, as necessary) to the melter feed ADS pumps of both melters.~~

Basis Discussion: The interlock limits the release of radioactive and chemically hazardous material by reducing melter offgas load to restore plenum vacuum in the event vacuum is degraded.~~Section 4.4.43.5 of 24590-WTP-PSAR-ESH-01-002-03, *Preliminary Documented Safety Analysis to Support Construction Authorization; LAW Facility* states the following:~~

~~"When the pressure on the backup purge air supply to any exhauster drops to the point that only 2 hr of purge air remains, melter feed is terminated. This will ensure that before any of the exhauster shaft seals fail, the cold cap will be reduced sufficiently that releases into the exhauster rooms will be well below the exposure standards."~~

~~[ALARA]~~

Verification: Verification is expected to be achieved through the following:

Verif. Method	Verif. By	Plan	Notes/Comments
R	ENG	Review the design for incorporation of the system specific interlock physical components.	~~Additional verification criteria for this interlock are discussed in the LOP/LVP SDD.~~
T	SU/ COM	Perform a test to verify the interlock actuates ADS air supply valves to the closed position, isolating feed to both melters upon detection of low shaft seal air supply pressure.	

3.8.2.2.3 ~~Terminate Melter Feed - MFV High Liquid Level~~Deleted

~~**Requirement:** Upon detection of a high liquid level (setpoint **TBD**) in the MFV, melter feed from the affected MFV shall be terminated to the associated melter. The method of feed termination shall be achieved by simultaneously isolating: [Section 4.4.19.3, PDSA – LAW Facility] (J.2.1).~~

~~1. Air supply to the melter feed ADS pumps of the affected MFV.~~
~~2. Water supply to the melter feed ADS pumps of the affected MFV.~~

~~**Basis Discussion:** Section 4.4.19.2 of 24590-WTP-PSAR-ESH-01-002-03, *Preliminary Documented Safety Analysis to Support Construction Authorization; LAW Facility* states the following:~~

~~"ADS pump operations include alternating cycles of melter feed and air through the feed lines to the melter, and periodic flushing of the ADS pump with demineralized water. These activities have been identified as having a potential to lead to a situation where a sustained siphon of feed material can be fed to the melter, even though the ADS pump is no longer operating, provided melter feed vessel liquid levels are high enough. By shutting down ADS pump operations before liquid levels in the melter feed vessel are high enough to support a sustained siphon, the set of conditions necessary to initiate a siphon are prevented from occurring."~~

~~Section 4.4.19.3 of 24590-WTP-PSAR-ESH-01-002-03, *Preliminary Documented Safety Analysis to Support Construction Authorization; LAW Facility* states the following:~~

~~"Unlike most other requirements involving the termination of melter feed, a delay in the isolation of demineralized water to the ADS pumps is not allowed. This is based on the undesirability of the amount of water that could be added to the melter feed vessel during this period, and the fact that flushing activities would pressurize the line of concern, further extending the time required for a siphon to break."~~

~~**Verification:** Verification is expected to be achieved through the following:~~

~~Verif. Method~~	~~Verif. By~~	~~Plan~~	~~Notes/Comments~~
~~R~~	~~ENG~~	~~Review the design for incorporation of the interlock.~~	~~Documented in DVR.~~
~~T~~	~~SU/ COM~~	~~Perform a test to verify the capability to terminate transfer from MFV to the melter, using the PPJ, when high liquid level (**setpoint TBD**) is reached in the MFV.~~	~~The PPJ system is required to be operational to perform this test.~~

3.8.2.2.4 ~~Terminate Melter Feed - Melter~~ Lid ~~Cavity~~ Cooling Water High Temperature Interlocks (Melter 1 and Melter 2)

Requirement: Upon detection of elevated melter lid cooling loop temperatures greater than or equal to 121.7°F, by elements LMP-TT-1654/-1655 (Melter 1) or LMP-TT-2654/-2655 (Melter 2), the interlock must terminate feed to the affected melter by closing respective ADS air supply valves LFP-YV-1208/-1212 (Melter 1), LFP-YV-2208/-2212 (Melter 2). [Section 4.4.4.1.3.3, 4.4.4.1.3.4 and App. A, Table A-1 LAW-DSA] (J.2.1).~~Upon detection of high cooling water temperature in the melter lid cavity, feed to both melters shall be terminated. The method of feed termination shall be achieved by: [Section 4.4.27.3, PDSA – LAW Facility] (J.2.1).~~

~~1. First isolating air to the melter feed ADS pumps of both melters.~~
~~2. Followed by the isolation of water (after line flushes, as necessary) to the melter feed ADS pumps of both melters.~~

Basis Discussion: This interlock limits the release of radioactive and chemically hazardous material by reducing the material at risk in the affected melter in the event of a degradation of lid cooling ability.~~Section 4.4.27.5 of~~

~~24590-WTP-PSAR-ESH-01-002-03, *Preliminary Documented Safety Analysis to Support Construction Authorization; LAW Facility* states the following:~~

~~"Feed is terminated to both melters, so that both melter cold caps are gone in the event that continuing temperature rises cause plate failure. This will ensure that there is no danger from an upset in one melter (e.g., excessive flow area into the melter beyond the capability of the exhausters to maintain depression) affecting the other melter in a way that could result in a release of offgas (e.g., losing depression due to preferential flow from the failed melter).~~

~~Terminating the air to the melter feed ADS pumps terminates melter feed. However, allowing unlimited water additions to the melter once the primary melter feed has been stopped can extend cold cap durations. Therefore, water to the ADS pumps is also isolated. A timed delay in water isolation is allowed for flushing activities, with related analytical limits and setpoints accounting for this time delay. Based on the results presented in 24590-LAW-RPT-ENS-10-001, allowing a short delay in water isolation (on the order of 5-10 min) does not change that the NOx concentrations 2 hr after feed termination will be well below TEEL-3 values."~~

Verification: Verification is expected to be achieved through the following:

Verif. Method	Verif. By	Plan	Notes/Comments
R	**ENG**	Review the design for incorporation of the system specific interlock physical components.	Additional verification criteria for this interlock are discussed in the LMP SDD.
T	**SU/ COM**	Perform a test to verify the interlock actuates ADS air supply valves, terminating feed to the affected melter upon detection of elevated melter lid cooling water temperature.	

3.8.2.2.5 SBS Low Level Interlocks (Melter 1 and Melter 2)~~Terminate Melter Feed - SBS Low or High Liquid Level~~

Requirement: Upon detection of low SBS level reaching 24.64 inches above the discharge of the downcomer (59.64 inches above the vessel tangent) as measured by transmitters LOP-LT-1011/-2011, the interlock shall terminate feed to both melters by closing the ADS air supply valves LFP-YV-1208/-1212/-2208/-2212 limiting the offgas generation for a 2 hour substantial cold cap burnoff duration [Section 4.4.4.1.5.3, 4.4.4.1.5.4 and App. A, Table A-1 LAW-DSA]. (J.2.1)~~Upon detection of a low or high liquid level in the SBS, melter feed shall be terminated to the associated melter. The method of feed termination shall be achieved by: [Section 4.4.5.3, PDSA - LAW Facility] (J.2.1).~~

~~1. First isolating air to the melter feed ADS pumps of the associated melter.
Followed by the isolation of water (after line flushes, as necessary) to the melter feed ADS pump of the associated melter.~~

Basis Discussion: The interlock limits the release of radioactive and chemically hazardous material by reducing melter offgas load to restore plenum vacuum in the event vacuum is degraded.~~Section 4.4.5.1 of 24590-WTP-PSAR-ESH-01-002-03, *Preliminary Documented Safety Analysis to Support Construction Authorization; LAW Facility* states the following:~~

~~"An interlock must stop feed to the associated melter if a high level is detected in the SBS. This control protects against continued level increases in the SBS as a result of condensing water vapor from the melter feed."~~

~~Feed is stopped to prevent a blocked offgas flow path to the stack.~~

~~Section 4.4.5.1 of 24590-WTP-PSAR-ESH-01-002-03, *Preliminary Documented Safety Analysis to Support Construction Authorization; LAW Facility* states the following:~~

~~"An interlock must stop feed to the associated melter if a low level is detected in the SBS. This control ensures NOx production is halted in the associated melters as the liquid level drops in the affected SBS. If liquid level continues to drop in the affected SBS due to evaporation, the NOx hazard from the associated melter is eliminated before overheat damage to the offgas system can occur."~~

Verification: Verification is expected to be achieved through the following:

Verif. Method	Verif. By	Plan	Notes/Comments
R	**ENG**	Review the design for incorporation of the system specific interlock physical components.	~~Additional verification criteria for this interlock are discussed in the LOP/LVP SDD.~~
T	**SU/ COM**	Perform a test to verify the interlock actuates ADS air supply valves closed, isolating air supply to both melters upon detection of elevated SBS low level from sensing elements.	

3.8.2.2.6 ~~Terminate Melter Feed - LVP HEPA Filter High Differential Pressure~~Deleted

~~**Requirement:** Upon detection of an activating signal (high) from the differential pressure instrumentation across both banks of HEPA filters, feed to both melters shall be terminated. The method of feed termination shall be achieved by: [Section 4.4.3.3, PDSA - LAW Facility] (J.2.1).~~

1. ~~First isolating air to the melter feed ADS pumps of both melters.~~
2. ~~Followed by the isolation of water (after line flushes, as necessary) to the melter feed ADS pumps of both melters.~~

~~**Basis Discussion:** Section 4.4.3.5 of 24590-WTP-PSAR-ESH-01-002-03, *Preliminary Documented Safety Analysis to Support Construction Authorization; LAW Facility* states the following:~~

~~"To prevent blockage of the melter offgas system and to prevent overpressurization of the melter plenum which would result in a gas release to the operating environment, a HEPA filter differential pressure safety instrumented system performs a number of actions."~~

~~Section 4.4.3.5 of 24590-WTP-PSAR-ESH-01-002-03, *Preliminary Documented Safety Analysis to Support Construction Authorization; LAW Facility* states the following:~~

~~"…allowing unlimited water additions to the melter once the primary melter feed has been stopped can extend cold cap durations. Therefore, water to the ADS pumps is also isolated. A timed delay in water isolation is allowed for flushing activities with related analytical limits and setpoints accounting for this time delay. Based on the results presented in 24590-LAW-RPT-ENS-10-001, allowing a short delay in water isolation (on the order of 5-10 min) does not change that the NOx concentrations 2 hr after feed termination will be well below TEEL-3 values. The setpoint will be selected such that increasing differential pressure across the HEPA filters will not result in the loss of melter depression in less than 2 hr."~~

~~[ALARA]~~

~~**Verification:** Verification is expected to be achieved through the following:~~

~~Verif. Method~~	~~Verif. By~~	~~Plan~~	~~Notes/Comments~~
~~**R**~~	~~**ENG**~~	~~Review the design for incorporation of the system specific interlock physical components.~~	~~Additional verification criteria for this interlock are discussed in the LOP/LVP SDD.~~

3.8.2.2.7 ~~Terminate Melter Feed – Mercury Mitigation Skid (Carbon Bed Adsorbers) High Differential CO_x~~Deleted

~~**Requirement:** Upon detection of high differential CO or CO_2 (CO_x) across the mercury mitigation skid (carbon bed adsorbers), feed to both melters shall be terminated. The method of feed termination shall be achieved by: [Section 4.4.3.3, PDSA – LAW Facility] (J.2.1).~~

1. ~~First isolating air to the melter feed ADS pumps of both melters.~~
2. ~~Followed by the isolation of water (after line flushes, as necessary) to the melter feed ADS pumps of both melters.~~

~~**Basis Discussion:** A high differential COx across the carbon bed adsorbers is indicative of a carbon bed fire which may lead to a melter offgas release.~~

~~**Verification:** Verification is expected to be achieved through the following:~~

~~Verif. Method~~	~~Verif. By~~	~~Plan~~	~~Notes/Comments~~
~~R~~	~~ENG~~	~~Review the design for incorporation of the system specific interlock physical components.~~	~~Additional verification criteria for this interlock are discussed in the LOP/LVP SDD.~~

3.8.2.2.8 ~~Terminate Melter Feed – Caustic Scrubber Recirculation Line Low Flow~~Deleted

~~**Requirement:** Upon detection of low flow, in the caustic scrubber recirculation line, melter feed shall be terminated to the both melters. The method of feed termination shall be achieved by: [Section 4.4.9.3, PDSA – LAW Facility] (J.2.1).~~

1. ~~First isolating air to the melter feed ADS pumps of both melters.~~
2. ~~Followed by the isolation of water to the melter feed ADS pumps of both melters.~~

~~**Basis Discussion:** Section 4.4.9.1 of 24590-WTP-PSAR-ESH-01-002-03, *Preliminary Documented Safety Analysis to Support Construction Authorization; LAW Facility* states the following:~~
~~"This safety function ensures that on detection of low flow in the caustic scrubber recirculation line (corresponding to a loss of capability to maintain required loop seal liquid level), melter feed will be terminated and the NO_x hazard eliminated (due to subsequent cold cap burnoff) from the melter offgas system before loop seal liquid levels drop to a point that would allow in-leakage into the melter offgas system through the drain line."~~

~~Section 4.4.9.5 of 24590-WTP-PSAR-ESH-01-002-03, *Preliminary Documented Safety Analysis to Support Construction Authorization; LAW Facility* states the following:~~

~~"Terminating the air to the melter feed ADS pumps upon detection of a loss of adequate flow to the loop seal (recirculation line flow) terminates melter feed. However, allowing unlimited water additions to the melter once the primary melter feed has been stopped can extend cold cap durations. Therefore, water to the ADS pumps is also isolated. A timed delay in water isolation is allowed for flushing activities, with related analytical limits and setpoints accounting for this time delay. Based on the results presented in 24590-LAW-RPT-ENS-10-001, allowing a short delay in water isolation (on the order of 5-10 min) does not change that the NOx concentrations 2 hr after feed termination will be well below TEEL-3 values."~~

~~**Verification:** Verification is expected to be achieved through the following:~~

~~Verif. Method~~	~~Verif. By~~	~~Plan~~	~~Notes/Comments~~
~~R~~	~~ENG~~	~~Review the design for incorporation of the system specific interlock physical components.~~	~~Additional verification criteria for this interlock are discussed in the LOP/LVP SDD.~~

3.8.2.2.9 ~~Terminate Melter Feed – LVP Header Low Vacuum~~Offgas Header High and Low Pressure Interlocks

Requirement: Upon detection of high offgas header pressures greater than or equal to -56.5" w.g. or low offgas header pressure less than or equal to -139.5" w.g. measured by instruments LVP-PT-0139/-0140, the interlock shall limit MAR and terminate sources of pressurization to both melters by closing the ADS air and water supply valves LFP-YV-1208/-1212/-2208/-2212 and LFP-YV-1207/-1211/-2207/-2211 respectively [Section 4.4.4.1.9.3, 4.4.4.1.9.4, 4.4.4.1.10.3, 4.4.4.1.10.4 and App. A, Table A-1, LAW-DSA]. (J.2.1) ~~Upon detection of low LVP header vacuum, feed to both melters shall be terminated. The method of feed termination shall be achieved by: [Section 4.4.33.3, PDSA – LAW Facility] (J.2.1).~~

~~1. Isolating air to the melter feed ADS pumps of both melters.~~

Basis Discussion: The interlock limits the release of radioactive and chemically hazardous material by reducing melter offgas load to restore plenum vacuum in the event vacuum is degraded.~~Section 4.4.33.3 of 24590-WTP-PSAR-ESH-01-002-03, *Preliminary Documented Safety Analysis to Support Construction Authorization; LAW Facility* states the following:~~

~~"Shutting off feed on reduced LVP header vacuum removes the source of NO_x necessary for the formation of ammonium nitrate in the offgas system components, before complete blockage of flow can occur."~~

~~Section 4.4.33.3 of 24590-WTP-PSAR-ESH-01-002-03, *Preliminary Documented Safety Analysis to Support Construction Authorization; LAW Facility* states the following:~~

~~"It is noted that while other melter feed termination interlocks include a subsequent isolation of the water supply to the ADS pumps due to concerns related to cold cap durations, no such issue exists for low LVP header vacuum. The system can run indefinitely in this configuration, and therefore, water isolation to the ADS pumps is not a required function."~~

Verification: Verification is expected to be achieved through the following:

Verif. Method	Verif. By	Plan	Notes/Comments
~~R~~	~~ENG~~	~~Review the design for incorporation of the system specific interlock physical components.~~	~~Additional verification criteria for this interlock are discussed in the LOP/LVP SDD.~~
R	ENG	Review the design for incorporation of the specific interlock physical components.	
T	SU/ COM	Perform a test to verify that high and low header pressure results in termination of sources of pressurization to both melters through closure of ADS air and water supply valves.	

3.8.2.2.10 ~~Terminate Melter Feed –~~ Loss of Normal Power to Safety Equipment Interlock

Requirement: Upon detection of loss of normal power monitored by sensing elements UPE-YY-2303/-2403/-2503, the interlock shall limit MAR and terminate sources of pressurization to both melters by closing the ADS air and water supply valves within 5 minutes [Section 4.4.4.1.22.3, 4.4.4.1.22.4 and App. A, Table A-1, LAW-DSA]. (J.2.1)~~Upon detection of a loss of normal power, feed to both melters shall be terminated. The method of feed termination shall be achieved by: [Sections 4.4.10.3, PDSA – LAW Facility] (J.2.1.).~~

~~1. First isolating air to the melter feed ADS pumps of both melters.~~
~~2. Followed by the isolation of water (after line flushes, as necessary) to the melter feed ADS pump of both melters.~~

Basis Discussion: Upon detection of loss of normal power, the interlock limits the release of radioactive and chemically hazardous material by reconfiguring the offgas system to maintain melter plenum vaccum. ~~the melter offgas system must automatically be placed into a configuration that allows the exhausters, when placed at a predetermined setting, to maintain confinement for no less than 2 hr.~~ Closure of the ADS air supply valves effectively stops the largest source of water addition, melter feed. In the event flush water is being added to either an ADS pump or the film cooler, and to prevent inadvertent initiation of flush, the ADS water flush and film cooler flush valves are shut. Stopping these flushes also serves to minimize cold cap burn-off time.

~~Section 4.4.10.5 of 24590-WTP-PSAR-ESH-01-002-03, *Preliminary Documented Safety Analysis to Support Construction Authorization; LAW Facility* states the following:~~

~~"The uninterruptible power supplies for the offgas exhausters are sized such that no sequencing of the offgas exhausters will be necessary during a loss of power event – each UPS is sized sufficiently to power its associated exhauster for the required period during cold cap burn off. In support of this, upon detection of loss of normal power, the melter offgas system is automatically placed into a known configuration to ensure the exhausters can maintain the required confinement function."~~

~~"Terminating the air to the melter feed ADS pumps terminates melter feed. However, allowing unlimited water additions to the melter once the primary melter feed has been stopped can extend cold cap durations. Therefore, water to the ADS pumps is also isolated. A timed delay in water isolation is allowed for flushing activities, with related analytical limits and setpoints accounting for this time delay. Based on the results presented in 24590-LAW-RPT-ENS-10-001, allowing a short delay in water isolation (on the order of 5-10 min) does not change that the NOx concentrations 2 hr after feed termination will be well below TEEL-3 values."~~

Verification: Verification is expected to be achieved through the following:

Verif. Method	Verif. By	Plan	Notes/Comments
R	**ENG**	Review the design for incorporation of the system specific interlock physical components.	Additional verification criteria for this interlock are discussed in the LAW uninterruptible power electrical system (UPE) SDD.
T	**SU/ COM**	Perform a test to verify that the loss of normal power supply interlock causes the ADS air and water supply valves to close within 5 minutes.	

3.8.2.2.11 Melter Annulus High Pressure Interlocks (Melter 1 and Melter 2)

Requirement: Upon detection of annulus pressure relative to C3V (melter gallery) greater than or equal

to -1.2 in w.g. as monitored by sensing elements LMP-PDT-1596/-1597/-2596/-2597, terminate feed to both melters by closing the ADS air supply valves LFP-YV-1208/-1212/-2208/-2212 [Section 4.4.4.1.25.3, 4.4.4.1.25.4 and App. A, Table A-1, LAW-DSA]. (J.2.1)

Basis Discussion: Mitigates the consequences of a melter offgas release by ensuring that the melter is not being fed if there is insufficient negative pressure in the melter annulus relative to the process cell.

Verification: Verification is expected to be achieved through the following:

Verif. Method	Verif. By	Plan	Notes/Comments
R	ENG	Review the design for incorporation of the system specific interlock physical components.	
T	SU/ COM	Perform a test to verify that upon detection of annulus high pressure relative to C3V (melter gallery), sensing elements initiate termination of feed to both melters resuting in closure of ADS air supply valves.	The PPJ system is required to be operational to perform this test.

3.8.2.2.12 Lid Cooling Low Flow Interlocks (Melter 1 and Melter 2)

Requirement: Upon detection of reduced melter lid cooling loop flow of less than 15 gpm by elements LMP-FT-1652/-1653 (Melter 1) or LMP-PT-2652/-2653 (Melter 2), the interlock shall terminate feed to the affected melter by closing the respective ADS air supply valves LFP-YV-1208/-1212 (Melter 1), LFP-YV-2208/-2212 (Melter 2) [Section 4.4.4.1.2.3, 4.4.4.1.2.4 and App. A, Table A-1, LAW-DSA]. (J.2.1)

Basis Discussion: The interlock limits the release of radioactive and chemically hazardous material by reducing the material at risk in the affected melter in the event of a degradation of lid cooling ability.

Verification: Verification is expected to be achieved through the following:

Verif. Method	Verif. By	Plan	Notes/Comments
R	ENG	Review the design for incorporation of the specific interlock physical components.	
T	SU/ COM	Perform a test to verify that low cooling loop flow measured by sensing elements results in isolation of the air supply to the affected melter ADS pumps.	

3.8.2.2.13 SBS High Level Interlocks (Melter 1 and Melter 2)

Requirement: Upon detection of high SBS water level in LOP-SCB-00001/00002 reaching 34.94 inches above the discharge of the downcomer (69.94 inches above the vessel tangent line) as measured by LOP-LT-1011 (Melter 1) or LOP-LT-2011 (Melter 2), the interlock shall reduce the rate of increase in the affected SBS water level by closing respective demineralized water and ADS water supply valves LFP-YV-1207/-1211 (Melter 1), LFP-YV-2207/-2211 (Melter 2). In addition, the SBS high water level interlock shall terminate feed to the affected melter by closing the ADS pump air supply valves LFP-YV-1208/-1212 (Melter 1), LFP-YV-2208/-2212 (Melter 2) for the respective melter [Section 4.4.4.1.6.3, 4.4.4.1.6.4 and App. A, Table A-1, LAW-DSA]. (J.2.1)

Basis Discussion: The interlock limits the release of radioactive and chemically hazardous material by reducing melter offgas load to restore plenum vacuum in the event vacuum is degraded.

Verification: Verification is expected to be achieved through the following:

Verif. Method	Verif. By	Plan	Notes/Comments
R	ENG	Review the design for incorporation of the specific interlock physical components.	
T	SU/ COM	Perform a test to verify that upon detection of SBS high water level, the interlock closes ADS water supply valves in the affected SBS and terminates feed to the affected melter by closing the ADS pump air supply valves.	

3.8.2.2.14 Loss of Control Signal or Loss of Air– Melter Feed Pump Plant Air and Water Supply Valves

Requirement: Melter Plenum High Pressure Interlocks, Melter Lid Cooling Low Flow Interlocks, Offgas Header High Pressure Interlocks, Offgas Header Low Pressure Interlocks and Loss of Normal Power to Safety Equipment Interlocks interlocked components that can fail in a manner that causes a release must fail to a safe position on loss of control signal or air. The PPJ melter feed pump plant air and demineralized water supply valves LFP-YV-1208/-1212/-2208/-2212 and LFP-YV-1207/-1211/-2207/-2211, shall be designed to fail in a closed position on loss of control signal or air to limit the potential release of radioactive or chemically hazardous material [Section 4.4.4.1.1.3, 4.4.4.1.1.4, 4.4.4.1.2.3, 4.4.4.1.2.4, 4.4.4.1.9.3, 4.4.4.1.9.4, 4.4.4.1.10.3, 4.4.4.1.10.4, 4.4.4.1.22.3, 4.4.4.1.22.4 and App. A, Table A-1, LAW-DSA].

Basis Discussion: Ensuring valves fail safe position is met on loss of control signal or air limits the potential for release of radioactive and chemically hazardous material by preventing the final control elements from failing in a manner that could cause a release.

Verification: Verification is expected to be achieved through the following:

Verif. Method	Verif. By	Plan	Notes/Comments
R	ENG	Review the design to ensure fail safe component positions are correctly identified.	
T	SU/ COM	Perform a test to verify that upon loss of control signal the interlocked components fail to a safe position.	

3.8.2.2.15 Loss of Control Signal or Loss of Air – Melter Feed Plant Air Supply Valves

Requirement: The Lid Cooling Water High Temperature Interlocks, SBS Low Level Interlocks, Offgas Exhauster 1A/1B/1C Shaft Seal Air Supply Low Pressure Interlock and Melter Annulus High Pressure Interlocks interlocked components that can fail in a manner that causes a release must fail to a safe position on loss of control signal or air. The PPJ melter feed pump plant air supply valves LFP-YV-1208/-1212/-2208/-2212, shall be designed to fail in a closed position on loss of control signal or air to limit the potential release of radioactive or chemically hazardous material [Section 4.4.4.1.3.3, 4.4.4.1.3.4, 4.4.4.1.5.3, 4.4.4.1.5.4, 4.4.4.1.21.3, 4.4.4.1.21.4, 4.4.4.1.25.3, 4.4.4.1.25.4 and App. A, Table A-1, LAW-DSA].

Basis Discussion: Ensuring valves fail safe position is met on loss of control signal or air limits the potential for release of radioactive and chemically hazardous material by preventing the final control elements from failing in a manner that could cause a release.

Verification: Verification is expected to be achieved through the following:

Verif. Method	Verif. By	Plan	Notes/Comments
R	ENG	Review the design to ensure fail safe component positions are correctly identified.	
T	SU/ COM	Perform a test to verify that upon loss of control signal or air the interlocked components fail to a safe position.	

3.8.2.2.16 Loss of Control Signal or Loss of Air – Melter Feed Demineralized Water Supply Valves

Requirement: The SBS High Level Interlocks interlocked components that can fail in a manner that causes a release must fail to a safe position on loss of control signal or air. The PPJ melter feed pump demineralized water supply valves LFP-YV-1207/-1211/-2207/-2211, shall be designed to fail in a closed position on loss of control signal or air to limit the potential release of radioactive or chemically hazardous material [Section 4.4.4.1.6.3, 4.4.4.1.6.4 and App. A, Table A-1, LAW-DSA].

Basis Discussion: Ensuring valves fail safe position is met on loss of control signal or air limits the potential for release of radioactive and chemically hazardous material by preventing the final control elements from failing in a manner that could cause a release.

Verification: Verification is expected to be achieved through the following:

Verif. Method	Verif. By	Plan	Notes/Comments
R	ENG	Review the design to ensure fail safe component positions are correctly identified.	
T	SU/ COM	Perform a test to verify that upon loss of control signal or air the interlocked components fail to a safe position.	

3.8.2.3 Instrumentation Location

Requirement: Transducer panels housing liquid level systems, and associated input/output, and pressure transducers, shall be located in a C3 classified area as a precaution against back-contamination. [Sections 7.1, 9.1, 11.16, ORD] [Section 9.5.6, BOD].

Basis Discussion: Transducer panels housing liquid level systems, and associated input/output, and pressure transducers are located in C3 areas in case leakage occurs.

[ALARA]

Verification: Verification is expected to be achieved through the following:

Verif. Method	Verif. By	Plan	Notes/Comments
R	ENG	Review design to verify that transducer panels and associated input/output, and pressure transducers are located in a shielded transducer bulge or a C3 classified areas.	

3.8.2.4 Implementation of Active Safety Instrumented Functions

Requirement: The active safety instrumented functions for the LCP and LFP systems shall be designed in accordance with the safety criterion 4.3-1, 4.3-3, 4.3-4, 4.3-6, 4.4-1 and 4.4-2 of 24590-WTP-SRD-ESH-01-001-

02, Safety Requirements Document Volume II. [Safety Criterion 4.3-1, 4.3-3, 4.3-4, 4.3-6, 4.4-1 and 4.4-2, SRD].

Basis Discussion: The SRD establishes the criterion and applicable standards for the safety design. The design processes including 24590-WTP-GPG-J-015, *Safety Instrumented System Implementation* and electrical design criteria are used to ensure independence and that the design complies with the mandated standards. The completed designs are documented in Safety Systems Requirements Specification and other design documents, which are required to be verified to ensure compliance with the standards.

Verification: Verification is expected to be achieved through:

Verif. Method	Verif. By	Plan	Notes/Comments
R	**ENG**	Verify the Safety Systems Requirements Specifications and designs are in accordance with the criterion and standards in safety criterion 4.3-1, 4.3-3, 4.3-4, 4.3-6, 4.4-1 and 4.4-2 of 24590-WTP-SRD-ESH-01-001-02, Safety Requirements Document Volume II.	May be accomplished by a DVR report

3.8.3 System Interface Requirements

3.8.3.1 Programmable Protection System-Active Safety Instruments

Requirement: The LFP Instruments with active safety functions shall interface with the PPJ or be engineered as local safety instrumented functions. Signal interfaces shall use standard 4-20 mA or digital contacts. [Sections 7.1, 9.4.1 BOD] (J.2.1).

Basis Discussion: Active safety instrumentation is implemented independently to the normal control system (PCJ/MHJ) through the PPJ system or in local logic solvers. The PPJ is the main safety system logic solver used on WTP and includes logic programming to implement the active safety controls.

~~Appendix C provides a list of the LFP active safety instrumented functions and implementing components for the LFP systems.~~

Verification: Verification is expected to be achieved through the following:

Verif. Method	Verif. By	Plan	Notes/Comments
R	**ENG**	Verify required interface included in specifications and material requisitions (MRs) used to procure active safety instruments.	

3.8.3.2 Process Control System – Instruments

Requirement: Instruments connected to the PCJ system shall not perform any credited active safety function. Instruments connected to the PCJ may include and perform safety boundary or retention functions. LFP instruments shall use standard commercially available instrumentation and communication protocols to interconnect to the PCJ system. Fieldbus or Profibus communication may be used. [Sections 7.1, 9.4.1, BOD] (J.1.1).

Basis Discussion: The PCJ is used as the normal process control system. The PCJ allows remote operator control and monitoring of the LFP processes.

4.1.1.3 LFP System Components

4.1.1.3.1 Melter Feed Preparation Vessels

Refer to P&IDs and Calculation: 24590-LAW-M6-LFP-00001001/00001002 (LAW Melter Feed Process System Melter 1 Feed Preparation LFP-VSL-00001), 24590-LAW-M6-LFP-00003001/00003002 (LAW Melter Feed Process System Melter 2 Preparation LFP-VSL-00003), and 24590-LAW-M6C-LFP-00001 (LAW Melter Feed Preparation Vessels LFP-VSL-00001 and LFP-VSL-00003 Sizing).

The MFPVs (LFP-VSL-00001 and -00003) have a batch capacity of ~~3,400~~3,465 gallons and receive and mix LAW concentrate with glass formers and sucrose. The total vessel volume, which includes the heel volume and the vapor space, is 9,077 gallons. LAW concentrate is received in the MFPV from a CRV (LCP-VSL-00001 or -00002) via a valve bulge (LCP-BULGE-00002 or -00003). Glass formers are received in the MFPV from a glass former mixer enclosure (GFR-TK-00022 or -00023). [3.4.1.1] [3.4.1.4]

Each MFPV is equipped with the following:

- One mechanical agitator (LFP-AGT-00001 or LFP-AGT-00003)
- Two vertical pumps (LFP-PMP-00001A/B or LFP-PMP-00003A/B)
- Two spray nozzles (LFP-NOZ-00001 to -00002, or LFP-NOZ-00006 to -00007). One nozzle is also used to provide sweep air from the PSA.
- Overflow to C3/C5 drains/sump collection vessel RLD-VSL-00004 via a common overflow header
- Pressure, level (redundant), temperature, and density instruments
- Vent to the LVP vessel vent collection header

Off-spec LAW concentrate or melter feed should be diluted down with demineralized water in the MFPV as much as possible. If the LAW concentrate or melter feed needs to be transferred back to the Pretreatment facility plant wash vessel (PWD-VSL-00044) for reprocessing, further dilution can be performed in the LAW plant wash vessel until the solids content is less than 5 wt%.

Demineralized water is also supplied to spray nozzles for washdown of MFPV interior surfaces. The wash water is transferred to the plant wash vessel. Each MFPV overflows to the C3/C5 drains/sump collection vessel (RLD-VSL-00004) via a common header. Each MFPV vents to the HEPA filter preheaters (LVP-HTR-00001A/B) via the vessel vent header.

Vessel LFP-VSL-00001 interfaces with sampler ASX-SMPLR-00013, and vessel LFP-VSL-00003 interfaces with sampler ASX-SMPLR-00012. Each MFPV shares a sample recirculation line with its corresponding MFV. Melter feed can be recirculated through a LFP bulge to the sampler cabinet where a representative portion of the stream is collected before the melter feed is returned to the MFPV. Sample lines are flushed at the completion of sampling operations with three pipeline volumes.

4.1.1.3.2 Melter Feed Vessels

Refer to P&IDs and Calculation: 24590-LAW-M6-LFP-00001003/00001004 (LAW Melter Feed Process System Melter 1 Feed Vessel LFP-VSL-00002), 24590-LAW-M6-LFP-00003003/00003004 (LAW Melter Feed Process System Melter 2 Feed Vessel LFP-VSL-00004), and 24590-LAW-M6C-LFP-00002 (LFP-VSL-00002 and LFP-VSL-00004 Sizing).

The MFVs (LFP-VSL-00002 and -00004) have a batch capacity of ~~3,400~~3,465 gallons and receive blended melter feed from the MFPVs for feed to the corresponding LAW melter (LMP-MLTR-00001 or -00002). The total vessel volume, which includes the heel volume and the vapor space, is 9,132 gallons. [3.4.1.1] [3.4.1.5]

Each MFV is equipped with the following:

- One mechanical agitator (LFP-AGT-00002 or LFP-AGT-00004)
- Six ADS pumps (LFP-PMP-00007 thru -00012, or LFP-PMP-00013 thru -00018)
- One vertical pump (LFP-PMP-00002 or -00004)
- Three spray nozzles (LFP-NOZ-00003 to -00005, or LFP-NOZ-00008 to -00010). One nozzle is also used to provide sweep air from the PSA.
- Overflow to C3/C5 drains/sump collection vessel RLD-VSL-00004 via a common overflow header
- Vent to the LVP vessel vent collection header

Off-spec melter feed should be diluted down with demineralized water in the MFV as much as possible. If the melter feed needs to be transferred back to the Pretreatment facility plant wash vessel (PWD-VSL-00044) for reprocessing, further dilution can be performed in the LAW plant wash vessel until the solids content is less than 5 wt%.

Demineralized water is also supplied to the spray nozzles for washdown of the MFV interior surfaces. The wash water is transferred to the plant wash vessel.

Each MFV overflows to the C3/C5 drains/sump collection vessel via a common header. Each MFV vents to the HEPA filter preheaters via the vessel vent header.

Vessel LFP-VSL-00002 interfaces with sampler ASX-SMPLR-00013, and vessel LFP-VSL-00004 interfaces with sampler ASX-SMPLR-00012. Each MFV shares a sample recirculation line with its corresponding MFPV. Melter feed can be recirculated through a LFP bulge to the sampler cabinet then back to the source LFP vessel. Once a steady flow is established several grab samples are pulled from the flow stream to provide a representative sample. Sample lines are flushed at the completion of sampling operations with three pipeline volumes.

4.1.1.3.3 Mechanical Agitators

Refer to P&IDs and Data Sheets: 24590-LAW-M6-LFP-00001002 (LAW Melter Feed Process System Melter 1 Feed Preparation LFP-VSL-00001), 24590-LAW-M6-LFP-00001004 (LAW Melter Feed Process System Melter 1 Feed Vessel LFP-VSL-00002), 24590-LAW-M6-LFP-00003002 (LAW Melter Feed Process System Melter 2 Feed Preparation LFP-VSL-00003), 24590-LAW-M6-LFP-00003004 (LAW Melter Feed Process System Melter 2 Feed Vessel LFP-VSL-00004) and 24590-LAW-MFD-LFP-00007/00008/00009/00010 (Mechanical Systems Data Sheet: Agitator/Mixer).

The mechanical agitators (LFP-AGT-00001/00002/00003/00004) for these vessels are designed for continuous operation. The agitators are used to mix the solution prior to and during sampling operations, transfers and storage. This maintains the insoluble solids in suspension allowing representative samples to be extracted. If mixing is lost and solids settle out, the time needed to re-suspend and uniformly distribute the solids in a batch of melter feed is 60 minutes per 24590-101-TSA-W000-0009-195-00001, *Pretreated Waste and Melter Feed Composition Variability Testing Using LAW Simulants*. The agitator impeller turns at 132 rpm driven by a 40 hp motor.

4.2.5 System Shutdown

Reserved for phase IIB.

4.2.6 Safety Management Programs and Administrative Controls

Reserved for phase IIB.

4.3 Testing and Maintenance

4.3.1 Temporary Configurations

Reserved for phase IIB.

4.3.2 TSR-Required Surveillances

~~Reserved for phase IIB.~~TSR required surveillances associated with the LFP system reside with the system from which the sensing elements are assigned. The LFP system has feed pump plant air and water supply valves that are included in these surveillances. Refer to the LOP, LVP, LMP and UPE SDDs for additional detail on surveillances.

4.3.3 Non-TSR Inspections and Testing

Reserved for phase IIB.

4.3.4 Maintenance

4.3.4.1 Post Maintenance Testing

Reserved for phase IIB.

4.3.4.2 Post-Modification Testing

Reserved for phase IIB.

4.4 Supplemental Information

None.

4.5 Programmatic (Non-Design) System Requirements

The following requirements are identified from Level 1 and 2 source documents (see 24590-WTP-RPT-ENG-01-001, *Technical Baseline Description*), or they have a direct association with implementation of a design requirement (e.g., operating constraints to ensure corrosion and design life requirements can be met). They are not design requirements and, therefore, not subject to verification; however, they are to be implemented programmatically for system operations and maintenance. Separately, functional and associated design requirements may have been defined to ensure the system design supports the achievement of these programmatic requirements.

Table 4-9 Level 1 &2 Programmatic (Non-Design) System Requirements

Section #	Section Rqmt Paragraph ref. (or NA)	Rqmt Source/~~TRMS ID#~~	Requirement	Ops Doc. In which implemented
WTP Contract				
4.5.1.1	There are no WTP Contract programmatic requirements applicable to the LCP and LFP.			
Nuclear Safety				
~~4.5.2.1~~	~~3.8.2.2.3~~	~~Section 5.5.14, 24590-WTP-PSAR-ESH-01-002-03~~	~~Surveillances related to the melter feed system interlock shall include periodic functional tests of the melter feed vessel level instrumentation.~~	~~(TBD)~~
~~4.5.2.2~~	~~3.8.2.2.3~~	~~Section 5.5.14, 24590-WTP-PSAR-ESH-01-002-03~~	~~Surveillances related to the melter feed system interlock shall include periodic loop calibrations of the melter feed vessel level instrumentation.~~	~~(TBD)~~
~~4.5.2.3~~	~~3.8.2.2.3~~	~~Section 5.5.14, 24590-WTP-PSAR-ESH-01-002-03~~	~~Surveillances related to the melter feed system interlock shall include functional tests of the ADS pump interlocks to isolate the demineralized water and plant service air feeds to the ADS pumps.~~	~~(TBD)~~
~~4.5.2.4~~	~~NA~~	~~Section 5.5.40.6, 24590-WTP-PSAR-ESH-01-002-03~~	~~Elements of the administrative control for LAW Facility operational controls shall include, on notification of a volcanic eruption event that has the potential to cause ashfall on the site, melter feed being stopped.~~	~~(TBD)~~
~~4.5.2.5~~	~~NA~~	~~Section 5.5.40.6, 24590-WTP-PSAR-ESH-01-002-03~~	~~Elements of the administrative control for LAW Facility operational controls shall include melter feed being stopped if an external fire occurs which could challenge the safe operation of Safety systems (e.g., due to smoke intrusion).~~	~~(TBD)~~
Environmental Permit Conditions				
4.5.3.1	There are no Environmental Permit Conditions programmatic requirements applicable to the LCP and LFP.			
ILAW Product Compliance Plan				

Document Number	Rev	Title	Text Reference
~~24590-WTP-PSAR-ESH-01-002-03~~	~~006B~~	~~Preliminary Documented Safety Analysis to Support Construction Authorization; LAW Facility Specific Information~~	~~PDSA – LAW Facility~~
24590-LAW-DSA-NS-18-0001	00A	Documented Safety Analysis for the Low Activity Waste Facility	LAW-DSA
24590-WTP-SRD-ESH-01-001-02	008	Safety Requirements Document, Volume II	SRD
DE-AC27-01RV14136	N/A	DOE/BNI WTP Contract Mod No. 371, Section C - Statement of Work	WTP Contract
WA7890008967	N/A	Dangerous Waste Portion of RCRA Permit	Dangerous Waste Portion of RCRA Permit

5.2 Other References

Document Number	Rev	Title
24590-WTP-3DP-G04B-00092	000	System Verification
24590-WTP-3DP-G04B-00093	007	System and Facility Design Descriptions
24590-WTP-3PS-M000-T0001	001	Engineering Specification for Air Displacement Slurry Pumps
24590-WTP-3PS-MPC0-T0008	001	Engineering Specification for Vessel-Mounted Vertical Transfer Pumps - LAW Facility
24590-WTP-COR-MGT-15-00001	000	Engineering, Procurement, and Construction (EPC) Code of Record
24590-WTP-DB-PET-17~~09~~-001	001	Process Inputs Basis of Design [PIBOD] for LAW and EMF
24590-WTP-GPG-ENG-033	003	Evaluation For Seismic Interaction Effects
24590-WTP-GPG-ENG-0170	008	Impact Evaluation
24590-WTP-GPG-J-015	007	Safety Instrumented System Implementation
24590-WTP-GPG-M-027	006	Recommended Slopes for Piping System
24590-WTP-GPG-M-036	007	Subcomponent Safety Classification Process
24590-WTP-M4C-V11T-00011	00C	Revised Calculation of Hydrogen Generation Rates and Times to Lower Flammability Limit for WTP
24590-WTP-M4C-V11T-00024	006	WTP Process Flowsheet Mass & Energy Balance Analysis for Input to Material Selection Assessments
24590-WTP-M6-50-00008	003	P&ID Symbols and Legend Sheet 8 of 8
24590-WTP-PD-ENG-0001	001	Equipment Qualification Program Description
24590-WTP-PSAR-ESH-01-002-01	06A	Preliminary Documented Safety Analysis to Support Construction Authorization; General Information
24590-WTP-RPT-ENG-01-001	009	Technical Baseline Description
24590-WTP-Z0C-W13T-00010	00G	Contact Dose Rates to Equipment from Beta and Gamma Emitters
24590-LAW-J0X-J41T-00001	000	LAW Facility Safety Instrumented Function Trip Setpoint Index

Appendix A Test Objectives, Conditions, and Acceptance Criteria

The testing activities included in this appendix are limited to those identified as needing to be performed by Startup or Commissioning to support the verification of requirements in Section 3. This appendix does not restrict Startup or Commissioning from performing other routine system functional testing or grooming.

Requirement (para #)	Plan (including SSCs)	Acceptance Criteria (TAC or GTC)*	Notes/Comments	Test Conditions
3.8.2.2.1	Test to verify that upon detection of melter plenum pressure equal to or greater than -0.1 in. w.g., (LMP-PDT-1528/-1529/-2528/-2529) the interlock actuates ADS air supply valves LFP-YV-1208/-1212/-2208/-2212 and water supply valves LFP-YV-1207/-1211/-2207/-2211 to the closed position for the respective melter. Initiation of the tests: Input a real or simulated melter plenum pressure signal to each of the sensing elements in any order. **Sensing Element CTNs:** LMP-PDT-1528/-1529/-2528/-2529 actuate the following final elements **Final Element CTNs:** LFP-YV-1208 LFP-YV-2208 LFP-YV-1212 LFP-YV-2212 LFP-YV-1207 LFP-YV-2207 LFP-YV-1211 LFP-YV-2211	**(TAC)** When the sensing element measures high melter plenum pressure, the PPJ actuates ADS air and water supply valves to the closed position for the respective melter.	The interlock testing can be performed concurrently with the melter plenum pressure interlock testing required for the LMP and LOP systems.	
3.8.2.2.2	Test to verify that upon detection of low shaft seal air supply pressure of less than or equal to 90 psig (LVP-PT-0156/-0160/-0164), the interlock actuates ADS air supply valves LFP-YV-1208/-1212/-2208/-2212 to the closed position. Initiation of the tests: Input a real or simulated low shaft seal air supply pressure signal to each of the sensing elements in any order. **Sensing Element CTNs:** LVP-PT-0156/-0160/-0164 actuate the following final elements **Final Element CTNs:** LFP-YV-1208 LFP-YV-2208 LFP-YV-1212 LFP-YV-2212	**(TAC)** When the sensing elements measure low shaft seal air supply pressure, the PPJ actuates ADS air supply valves to the closed position for both melters.		

Requirement (para #)	Plan (including SSCs)	Acceptance Criteria (TAC or GTC)*	Notes/Comments	Test Conditions
~~3.8.2.2.3~~	~~Perform a test to verify the capability to terminate transfer from a MFV (LFP-VSL-00002/4) to the corresponding melter when high liquid level (setpoint **TBD**) is reached in the MFV. The Feed Vessel High Level Interlock will detect high liquid level in the MFV and isolate the DIW and PSA to appropriate ADS pumps.~~ ~~Initiation of the tests: Input a real or simulated high vessel liquid level signal **(TBD)** to each of the following level transmitters in any order: LFP-LT-1145, LFP-LT-2145.~~ ~~**CTNs:**~~ ~~LFP-VSL-00002~~ ~~LFP-LT-1145~~ ~~LFP-YV-1207~~ ~~LFP-YV-1208~~ ~~LFP-VSL-00004~~ ~~LFP-LT-2145~~ ~~LFP-YV-2207~~ ~~LFP-YV-2208~~	~~**(TAC)**~~ ~~• Upon a high level signal (TBD) inputted to LFP-LT-1145, the interlock closes LFP-YV-1208 and LFP-YV-1207 and alarms and annunciators associated with this interlock as defined in the supplier submittal requirements summary (SSRS) document (24590-LAW-3PS-PPJ-T0006 [under development]) are activated. Some actions are time dependent.~~ ~~• Upon a high level signal (TBD) inputted to LFP-LT-2145, the interlock closes LFP-YV-2208 and LFP-YV-2207 and alarms and annunciators associated with this interlock as defined in the supplier submittal requirements summary (SSRS) document (24590-LAW-3PS-PPJ-T0006 [under development]) are activated. Some actions are time dependent.~~	~~**References:**~~ ~~PPJ trip setpoint:~~ ~~24590-LAW-J0X-J41T-00001, *LAW Facility Safety Instrumented Function Trip Setpoint Index*~~ ~~Sections 2.3, 24590-LAW-M6C-LFP-00013, *Analytical Limit for LAW Melter Feed Vessel High Level Interlock*~~ ~~24590-LAW-J3-LFP-90001, *Logic Diagram LAW-T16F01C01 Melter 1 Feed Vessel High Level Interlock*~~ ~~24590-LAW-J3-LFP-90002, *Logic Diagram LAW-T16F01C02 MELTER 2 Feed Vessel High Level Interlock*~~	
3.8.2.2.4	Test to verify that upon detection of elevated melter lid cooling loop temperatures greater than or equal to 121.7°F, by elements LMP-TT-1654/-1655/-2654/-2655, the interlock actuates ADS air supply valves LFP-YV-1208/-1212 or LFP-YV-2208/-2212 to the closed position terminating feed to the affected melter. Initiation of the tests: Input a real or simulated melter lid cooling loop temperature signal to each of the sensing elements in any order. **Sensing Element CTNs:** LMP-TT-1654/-1655/-2654/-2655 actuate the following final elements **Final Element CTNs:** LFP-YV-1208 LFP-YV-2208 LFP-YV-1212 LFP-YV-2212	**(TAC)** When the sensing element measures elevated melter lid cooling water temperature, the PPJ actuates ADS air supply valves to the closed position for the respective melter.	The interlock testing can be performed concurrently with the melter plenum pressure interlock testing required for the LMP and LOP systems.	

Requirement (para #)	Plan (including SSCs)	Acceptance Criteria (TAC or GTC)*	Notes/Comments	Test Conditions
3.8.2.2.5	Test to verify that upon detection of low SBS level reaching 23.5 inches above the discharge of the downcomer (58 inches above the vessel tangent) as measured by transmitters LOP-LT-1011/-2011, the interlock actuates ADS air supply valves LFP-YV-1208/-1212/-2208/-2212 to the closed position, terminating the feed to both melters. Initiation of the tests: Input a real or simulated SBS low level to each of the sensing elements in any order. **Sensing Element CTNs:** LOP-LT-1011/-2011 actuate the following final elements **Final Element CTNs:** LFP-YV-1208 LFP-YV-2208 LFP-YV-1212 LFP-YV-2212	**(TAC)** When the sensing element measures SBS low level, the PPJ actuates ADS air supply valves to the closed position for both melters.		
3.8.2.2.9	Test to verify that upon detection of high offgas header pressures greater than or equal to -56.5" w.g. or low offgas header pressure less than or equal to -139.5" w.g. measured by instruments LVP-PT-0139/-0140, the interlock actuates ADS air and water supply valves LFP-YV-1208/-1212/-2208/-2212 and LFP-YV-1207/-1211/-2207/-2211 to the closed position. Initiation of the tests: Input a real or simulated offgas header pressures to each of the sensing elements in any order. **Sensing Element CTNs:** LVP-PT-0139/-0140 actuate the following final elements **Final Element CTNs:** LFP-YV-1208 LFP-YV-2208 LFP-YV-1212 LFP-YV-2212 LFP-YV-1207 LFP-YV-2207 LFP-YV-1211 LFP-YV-2211	**(TAC)** When the sensing element measures offgas header pressure high or low, the PPJ actuates ADS air and water supply valves to the closed position for both melters.		
3.8.2.2.10	Perform a test to verify that the loss of normal power supply interlock causes the ADS air and water supply valves to close within 5 minutes. Initiation of the tests: Input a real or simulated loss of normal power signal to each of the sensing elements in any order. **Sensing Element CTNs:** UPE-YY-2303/-2403/-2503 actuate the following final elements. **Final Element CTNs:** LFP-YV-1208 LFP-YV-2208 LFP-YV-1212 LFP-YV-2212 LFP-YV-1207 LFP-YV-2207 LFP-YV-1211 LFP-YV-2211	**(TAC)** When the sensing element measures loss of normal power supply, the PPJ actuates ADS air and water supply valves to the closed position for both melters.		

Requirement (para #)	Plan (including SSCs)	Acceptance Criteria (TAC or GTC)*	Notes/Comments	Test Conditions
3.8.2.2.11	Test to verify that upon detection of annulus pressure relative to C3V melter gallery) greater than or equal to -1.2 in w.g. as monitored by sensing elements LMP-PDT-1596/-1597/-2596/-2597, the interlock actuates ADS air supply valves LFP-YV-1208/-1212/-2208/-2212 to the closed position, terminating the feed to both melters. Initiation of the tests: Input a real or simulated annulus pressure signal to each of the sensing elements in any order. **Sensing Element CTNs:** LMP-PDT-1596/-1597/-2596/-2597 actuate the following final elements. **Final Element CTNs:** LFP-YV-1208 LFP-YV-2208 LFP-YV-1212 LFP-YV-2212	**(TAC)** When the sensing element measures high annulus pressure relative to C3V loss of normal power supply, the PPJ actuates ADS air and water supply valves to the closed position for both melters.		
3.8.2.2.12	Test to verify that upon detection of reduced melter lid cooling loop flow of less than 15 gpm by elements LMP-FT-1652/-1653/-2652/-2653, the interlock actuates ADS air supply valves to the closed position, terminating the feed to affected melter. Initiation of the tests: Input a real or simulated melter lid cooling loop flow to each of the sensing elements in any order. **Sensing Element CTNs:** LMP-FT-1652/-1653/-2652/-2653 actuate the following final elements. **Final Element CTNs:** LFP-YV-1208 LFP-YV-2208 LFP-YV-1212 LFP-YV-2212	**(TAC)** When the sensing element measures reduced melter lid cooling loop flow, the PPJ actuates ADS air supply valves to the closed position for the affected melter.		
3.8.2.2.13	Test to verify that upon SBS water level reaching 34.94 inches above the discharge of the downcomer (69.94 inches above the vessel tangent line) as measured by LOP-LT-1011/-2011, the interlock actuates ADS water supply valves LFP-YV-1207/-1211 or LFP-YV-2207/-2211 to the closed position limiting introduction of water in the affected SBS and terminates the feed to the affected melter by actuating LFP-YV-1208/-1212 or LFP-YV-2208/-2212 to the closed position. Initiation of the tests: Input a real or simulated SBS high level signal to each of the sensing elements in any order. **Sensing Element CTNs:** LOP-LT-1011/-2011 actuate the following final elements **Final Element CTNs:** LFP-YV-1208 LFP-YV-2208 LFP-YV-1212 LFP-YV-2212 LFP-YV-1207 LFP-YV-2207 LFP-YV-1211 LFP-YV-2211	**(TAC)** When the sensing element measures SBS high level, the PPJ actuates ADS water supply valves to the closed position for the affected SBS and terminates feed to the affected melter by closing ADS air supply valves.		

Requirement (para #)	Plan (including SSCs)	Acceptance Criteria (TAC or GTC)*	Notes/Comments	Test Conditions
3.8.2.2.14	Test to verify that upon loss of control signal or air the melter feed pump plant air supply valves LFP-YV-1208/-1212/-2208/-2212 and the demineralized water supply valves LFP-YV-1207/-1211/-2207/-2211 fail in a closed position. Initiation of the tests: Input a real or simulated loss of control signal or air addressing each of the final elements and the respective interlocks. **Final Element CTNs:** LFP-YV-1208 LFP-YV-2208 LFP-YV-1212 LFP-YV-2212 LFP-YV-1207 LFP-YV-2207 LFP-YV-1211 LFP-YV-2211	**(TAC)** When the final element receives a loss of control signal or air the melter feed pump plant air and demineralized water supply valves fail in a closed position.		
3.8.2.2.15	Test to verify that upon loss of control signal or air the melter feed pump plant air supply valves LFP-YV-1208/-1212/-2208/-2212 fail in a closed position. Initiation of the tests: Input a real or simulated loss of control signal or air addressing each of the final elements and the respective interlocks. **Final Element CTNs:** LFP-YV-1208 LFP-YV-2208 LFP-YV-1212 LFP-YV-2212	**(TAC)** When the final element receives a loss of control signal or air the melter feed pump plant air supply valves fail in a closed position.		
3.8.2.2.16	Test to verify that upon loss of control signal or air the melter feed pump demineralized water supply valves LFP-YV-1207/-1211/-2207/-2211 fail in a closed position. Initiation of the tests: Input a real or simulated loss of control signal or air addressing each of the final elements and the corresponding SBS High Level Interlocks. **Final Element CTNs:** LFP-YV-1207 LFP-YV-2207 LFP-YV-1211 LFP-YV-2211	**(TAC)** When the final element receives a loss of control signal or air the melter feed pump demineralized water supply valves fail in a closed position.		

Notes:
* Test acceptance criteria (TAC) are based on requirements from authorization basis documents. General test criteria (GTC) are requirements from other sources.

Appendix C ~~Active Safety Instruments and Functions~~Deleted

~~The listed instruments are designated as having active safety functions, implemented through interface with and programming in the PPJ system. Information in the table below reflects the current design of active safety instruments, including functions, and safety designations per the P&IDs and associated equipment and instrument lists. In some cases the current safety classification of the SSCs in design is known to exceed the design requirements. The information will be updated as needed to reflect changes to the design. The information below is provided in support of Plant Engineering and Operations and does not represent design requirements.~~

~~**Note:** Only safety functions initiated in the LCP/LFP are listed. For other safety functions see the respective SDDs for those systems.~~

~~Function Title~~	~~Safety Designation~~	~~Sensors~~	~~Final Control Elements~~	~~Functional Description~~
~~Melter 1 Feed Vessel High Level Interlocks~~	~~SS~~	~~LFP-LT-1145~~	~~LFP-YV-1207 via YY-1207B and YC-1207B~~ ~~LFP-YV-1208 via YY-1208B and YC-1208B~~	~~High level closes valves.~~
~~Melter 2 Feed Vessel High Level Interlocks~~	~~SS~~	~~LFP-LT-2145~~	~~LFP-YV-2207 via YY-2207B and YC-2207B~~ ~~LFP-YV-2208 via YY-2208B and YC-2208B~~	~~High level closes valves.~~

Attachment 5
18-ECD-0078
(42 Pages Excluding Cover Sheet)

24590-LA W-3ZN-LMP-00004, *Incorporation of DSA Requirements and Open EIES into the LAW LMP SDD 24590-LAW-3ZD-LMP-00001*

System Design Description Change Notice

CHANGE DOCUMENT NO. 24590-LAW-3ZN-LMP-00004

JOB NO.	TITLE FOR CHANGE NOTICE
24590	Incorporation of DSA requirements and open EIEs into the LAW LMP SDD 24590-LAW-3ZD-LMP-00001

DOCUMENT NUMBER	REV	DOCUMENT NUMBER	REV
24590-LAW-3ZD-LMP-00001	01		

PART OF DESIGN CHANGE PACKAGE (DCP)? ☐ Yes ☒ No

Justification for no DCP: Impacted SSC has not been turned over to the Plant Management organization.

INCORPORATES AN EIE? ☒ Yes ☐ No If yes, list EIEs:

24590-LAW-EIE-ENG-17-0020 Rev. 0
24590-LAW-EIE-J-17-0008 Rev. 0
24590-LAW-EIE-J-17-0026 Rev. 0
24590-LAW-EIE-J-17-0029 Rev. 0
24590-LAW-EIE-J-18-0003 Rev. 0
24590-LAW-EIE-MS-18-0002 Rev. 0
24590-WTP-EIE-PR-17-0001 Rev. 0
24590-LAW-EIE-J-17-0007 Rev. 0
24590-WTP-EIE-MS-17-0007 Rev. 0
24590-WTP-EIE-SYSE-16-0085 Rev. 0

JUSTIFICATION FOR CHANGE

Work off items are necessary for LAW construction complete are captured by the incorporation of EIEs in this SDDCN. The LAW DSA (24590-LAW-DSA-NS-18-0001) issuance supersedes the LAW PDSA (24590-WTP-PSAR-ESH-01-002-03). Requirements from the PDSA that are in the LAW LMP SDD (24590-LAW-3ZD-LMP-00001) are being removed, revised, or replace with requirements from the LAW DSA.

Supersedes Change Document ☐ Yes ☒ No

REQUIREMENTS REVIEW

Client Approval Required	☐ Yes ☒ No	Interface Resolution Required *	☐ Yes ☒ No

Address any "yes" answers in the description

DESCRIPTION OF CHANGE

EIE(s):

The following EIEs have *been incorporated* into the SDD.

24590-LAW-EIE-ENG-17-0020 Rev. 0 – Administrative controls in 24590-LAW-Z0C-W13T-00007 were added in new section 4.3.4.2.
24590-LAW-EIE-J-17-0008 Rev. 0 – Safety instrument function components testing frequency during plant operation were added in new section 4.3.3.1.1.
24590-LAW-EIE-J-17-0026 Rev. 0 – Safety instrument function components testing frequency during plant operation were added in new section 4.3.3.1.1.
24590-LAW-EIE-J-17-0029 Rev. 0 – Melter Lid Cooling Cavity Low Flow Interlock setpoint has been added in requirement 3.14.2.1.5.
24590-LAW-EIE-J-18-0003 Rev. 0 – Melter Plenum and Annulus High Pressure Interlock setpoints have been updated in requirements 3.14.2.1.1.1 and 3.14.2.1.4, respectively.
24590-LAW-EIE-MS-18-0002 Rev. 0 – Operational constraints in 24590-LAW-M2C-LVP-00016 was added in new section 4.2.3.7.2.
24590-WTP-EIE-PR-17-0001 Rev. 0 – LAW process stream property data changed from tables in Appendix B of 24590-WTP-DB-PET-09-001 to tables in Appendix A of 24590-WTP-DB-PET-17-001 in the Basis Discussion of requirement 3.4.1.6.

24590-WTP-EIE-SYSE-16-0085 Rev. 0 – Environmental qualification requirements for SCCs that operate in harsh environments were updated in requirement 3.4.2.2

24590-LAW-EIE-J-17-0007 Rev. 0 – was issued against Revision 0 but not incorporated into Revision 1. Section 4.1.6.1.5 was revised to incorporate a description of the LPH container and pour present interlocks with the LMP pour valves and IR cameras.

24590-WTP-EIE-MS-17-0007 Rev. 0 – was issued against Revision 0 and incorporated into Revision 1. The crane limits defined in 24590-LAW-M2C-LMP-00007 were added to section 4.2.3.7.

The following changes are added (underlined) or deleted (~~strikethrough~~) and are provided in the attachment.

Section 1.5.1 was revised to update acronyms.

Section 2.1, Table 2-1 was revised to update linked requirements.

Requirement 3.4.1.6 (24590-WTP-EIE-PR-17-0001) was revised to update the Basis Discussion per the EIE.

Requirement 3.4.1.8 was revised to align with the description and seismic classification in the LAW DSA. Incorporated seismic classification requirements 3.6.2.1 and 3.7.2.5.

Requirement 3.4.1.10 was revised to remove refence to the General PDSA in the Basis discussion.

Requirement 3.4.2.1 was revised to align with the description and safety functions in the LAW DSA.

Requirement 3.4.2.2 (24590-WTP-EIE-SYSE-16-0085) was revised to update the requirement per 24590-WTP-SRDCN-ENG-16-00022.

Requirement 3.4.4.3 was added as a missed requirement from the BOD.

Requirement 3.5.2.1 was revised to update the Reference IDs from the LAW DSA.

Requirement 3.5.2.2 was revised to remove language that the LAW DSA did not retain from the LAW PDSA as written.

Requirement 3.5.2.3 was added based on new functional requirement and performance criterion in the LAW DSA.

Requirement 3.6.2.1 was deleted and combined into 3.4.1.8.

Requirement 3.6.2.3 was revised to align with the functional requirement and performance criterion in the LAW DSA.

Requirement 3.6.2.4 was revised to remove the PDSA requirement as the LAW DSA did not retain this requirement from the LAW PDSA as written and add the portion of the requirement from BOD section 15.3.3 not covered by Requirement 3.5.2.1.

Requirement 3.6.2.5, 3.6.2.6, and 3.6.2.7 were deleted, as the LAW DSA did not retain these requirements from the LAW PDSA as written.

Requirement 3.6.2.8, 3.7.2.1 and 3.7.2.3 were revised to align with the functional requirements and performance criteria in the LAW DSA.

Requirement 3.7.2.5 was deleted and combined into 3.4.1.8.

Requirement 3.8.2.1 and 3.8.2.6 were revised to align with the functional requirements and performance criteria in the LAW DSA.

Requirement 3.8.2.7 was deleted, as the LAW DSA did not retain this requirement from the LAW PDSA as written.

Requirement 3.8.2.8 were revised to align with the functional requirements and performance criteria in the LAW DSA.

Requirement 3.11.2 (now Requirement 3.11.2.1) was renumbered and revised to align with the functional requirement and performance criterion in the LAW DSA.

Requirement 3.14.2.1.1 (now Requirement 3.14.2.1.1.1) (24590-LAW-EIE-J-18-0003) was renumbered and revised to align with the functional requirements and performance criteria in the LAW DSA.

Requirement 3.14.2.1.1.2 was added based on new functional requirement and performance criterion in the LAW DSA.

Requirement 3.14.2.1.3 was revised to align with the functional requirement and performance criterion in the LAW DSA.

Requirement 3.14.2.1.4 (24590-LAW-EIE-J-18-0003) was revised to align with the functional requirement and performance criterion in the LAW DSA.

Requirement 3.14.2.1.5 (24590-LAW-EIE-J-17-0029) was added based on new functional requirement and performance criterion in the LAW DSA.

Requirement 3.15.2.2 was revised to align with the functional requirement and performance criterion in the LAW DSA.

Requirement 3.15.3.1 was revised to remove the PDSA Reference IDs that were not retained in the LAW DSA.

Section 3.16.1, Table 3-5 was revised to update the footnote with LAW Facility DSA.

Section 4.1.6.1.5 (24590-LAW-EIE-J-17-0007) was revised to incorporate a description of the LPH container and pour present interlocks with the LMP pour valves and IR cameras.

Section 4.2.3.6 was revised to replace PDSA with DSA.

Section 4.2.3.7.1 & 4.2.3.7.2 (24590-LAW-EIE-MS-18-0002) were added to separate an existing discussion and a new subsection added to capture operational load height restrictions from 24590-LAW-M2C-LMP-00016. Additional clarification was added to both sections where restrictions are limited to when crush pads are in place or not.

Section 4.2.6 was revised to remove reference to the PDSA.

Section 4.3.3.1.1 (24590-LAW-EIE-J-17-0008 & 24590-LAW-EIE-J-17-0026) was added to capture safety instrument function components testing frequency dictated by multiple Probability of Failure on Demand (PFD) calculations.

Section 4.3.4.2 (24590-LAW-EIE-ENG-17-0020) was added to address the administrative controls in 24590-LAW-Z0C-W13T-00007.

Section 5.1 was updated with the LAW DSA.

Section 5.2 was updated with calculations updates from EIEs.

Appendix A, Requirement 3.6.2.4 was deleted, as the LAW DSA did not retain this requirement from the LAW PDSA as written.

Appendix A, Requirement 3.8.2.6 was added based on new a functional requirement, CTNs, and performance criterion in the LAW DSA.

Appendix A, Requirement 3.14.2.1.1.1 was renumbered per the requirement and was revised based on functional requirements, CTNs, and performance criteria in the LAW DSA.

Appendix A, Requirement 3.14.2.1.1.2 and 3.14.2.1.5 were added based on new functional requirements, CTNs, and performance criteria in the LAW DSA.

Appendix A, Requirement 3.14.2.1.3 one test was deleted as the LAW DSA did not retain its requirement from the LAW PDSA as written. Another test was revised based on functional requirements, CTNs, and performance criteria in the LAW DSA.

Appendix A, Requirement 3.14.2.1.4, and 3.15.2.2 were revised based on functional requirements, CTNs, and performance criteria in the LAW DSA.

Appendix C, *Active Safety Instrumentations and Functions* was revised to update the CTNs per the sensing and final elements tables in the LAW DSA.

Appendix F, Table F-1 the *Nuclear Safety* section was revised to remove LAW PDSA items.

ORIGINATOR	CHECKER
ORG/Discipline - Wayne Sexton/Systems	David Mears/Jerid Mauss

Checked
By: Jerid Mauss - jlmauss
Org Name: Bechtel
Placed: Jun 12, 2018

Validation:	See attached	See attached		
	Organization/Area of Responsibility	*Print/Type Name*	*Signature*	*Date*
Concurrence:	N/A	N/A		
	Title	*Print/Type Name*	*Signature*	*Date*
Concurrence:	Manager of Engineering and Design Authority	Ian Milgate		6/19/18
	Title	*Print/Type Name*	*Signature*	*Date*
Approval:	Systems Engineering Manager	Sarah Barker		6.19.18
	Title	*Print/Type Name*	*Signature*	*Date*

Validation

Appl.	Requirement Area	Requirement Developer	Signature	Date
☐	Architectural Design			
☐	Civil/Structural Design			
☐	Controls & Instrumentation Design			
☑	Electrical Design & AHJ	Scott Goad	per email	6-13-18
☐	Fire Protection Engineering			
☐	HVAC Design			
☐	Mechanical Handling Design			
☑	Mechanical Systems Design	Sarah Barker	SBarker	6-19-18
☐	Plant Design			
☐	Process Engineering			
☐	Interface (External)			
☐	Interface (Internal)			
☐	System Functions and Requirements			
☐	Equipment Environmental Qualification			
☐	Materials Engineering / Technology			
☐	Plant Software Design			
☐	Environmental Permitting (ESH)			
☑	Nuclear Safety Engineering	Kraig Wendt see NSE statement below	see below	
☐	Criticality Safety			
☐	Radiological Engineering			
☐	Industrial Safety/Hygiene (ESH)			
☐	Mission (WTP Contract func/ perfor rqmts)			
☐	Operations Requirements Document (Plant Ops)			
☐	Quality Assurance			
☐	Safeguards & Security			
☐	Startup			
☐	Transportation & Logistics			

* Validation not required for alpha/preliminary design description documents.

NSE has no further comments – all previous NSE comments provided are resolved; the LAW DSA requirements are correct. The subject SDD does not need SE documentation as the SDD is a precursor/preliminary document to the actual design change. N/A- 10 item 2 and N/A-08. K. Wendt

Reviewed
No Comments ☑
By: Kraig Wendt - kmwendt
Org Name: BNI
Placed: Jun 13, 2018

1 Introduction

1.5.1 Acronyms

DSA Documented Safety Analysis
MGG Melter Gamma Gate
~~PDSA preliminary documented safety analysis~~
PFD Probability of Failure on Demand
SIF Safety Instrumented Functions
SIS Safety Instrumented System
RWP radiological work permit

2 General Overview

2.1 System Functions/Safety Functions

Table 2-1 Functional Analysis and Crosswalk to Requirements

Reference	Functional Analysis Description	Requirement Section No.
A.0	Provide containment - Provide containment and confinement for molten glass and gasses released during processing.	3.4.1.7, 3.4.1.8, 3.4.1.9, 3.4.4.2, 3.5.1.1, 3.5.2.2, ~~3.6.2.1,~~ 3.6.2.3, ~~3.6.2.5,~~ 3.7.2.1
E.1	Receive cooling water	~~N/A~~3.15.3.2
E.1.1	Cooling for melt pool and discharge chamber cooling panels with PCW.	3.5.2.2, 3.11.1.2~~,~~
F.1	Draining to the RLD in off-normal conditions.	3.11.2.1~~,~~
H.1	PCJ - Provide non-safety monitoring, control, and communication	~~N/A~~3.14.1.4
H.1.1	The LMP nonsafety process shall be monitored and controlled by the PCJ system and shall include the following main functions: a) Monitor and control melt pool temperature. b) Monitor plenum pressure. c) Monitor plenum temperature. d) Monitor melter lid cooling cavity temperature. e) Monitor melt pool level and density. f) Monitor refractory temperature. g) Monitor cooling panel cooling water flow and temperature. h) Monitor feed encasement assembly leak detection. i) Control rate of discharge from melt pool to the discharge chambers. j) Monitor container fill level. k) Monitor and control electrode power supplies. l) Monitor and control startup heaters.	a) 3.4.1.3, 3.14.1.1 b) 3.5.2.1, 3.14.2.4.1 c) 3.14.2.4.2 d) 3.14.2.1.3, 3.14.2.1.5 e) 3.14.2.4.4 f) 3.14.2.4.5 g) 3.14.2.4.6 h) 3.14.2.4.7 i) 3.14.2.4.8 j) 3.14.2.4.9 k) 3.4.1.3, 3.13.2.1, 3.14.1.2 l) 3.14.1.3

Table 2-1 Functional Analysis and Crosswalk to Requirements

Reference	Functional Analysis Description	Requirement Section No.
H.2	PPJ – Provide safety monitoring, control, and communication.	~~N/A~~3.14.2.2, 3.14.2.3
H.2.1	Shut down potential causes of melter pressure increase to prevent over pressurization of the melter.	3.14.2.1.1.1
H.2.1.1	Terminate melter feed upon detecting melter plenum high pressure (reduced vacuum).	3.14.2.1.1.1
H.2.1.2	Terminate air and demineralized water to the film cooler upon detecting melter plenum high pressure (reduced vacuum).	3.14.2.1.1.1
H.2.1.3	Open the standby offgas line upon detecting melter plenum high pressure (reduced vacuum).	3.14.2.1.1.1
H.2.1.4	Stop air supply to the WESP upon detecting melter plenum high pressure (reduced vacuum).	3.14.2.1.1.1
H.2.2	Prevent high melter lid temperatures to prevent against damage to the melter lid portion of the gas barrier plates and resulting (NO_x) release via a breach to the melter offgas confinement boundary.	3.14.2.1.3, 3.14.2.1.5
H.2.2.1	Terminate melter feed upon detecting melter lid cooling cavity cooling water high temperature.	3.14.2.1.3, 3.14.2.1.5

3 Design Requirements

3.4.1.6 Materials of Construction and Erosion/Corrosion Design Parameters

Basis Discussion: The allowance for erosion/corrosion and applicable materials of construction are limited to those components that come into contact with the process fluids and that are required to maintain confinement/containment of those process fluids. Materials of construction that can withstand the erosive/corrosive low-activity waste effluents and chemicals are selected. The materials for the LMP system equipment and components should be selected based on the stream data presented in the process corrosion data sheet report. If vessel washing via internal spray mechanisms is needed to prevent or minimize corrosion, the operational limitations are identified in the vessel corrosion evaluation. Refer to Tables A-7 thru A-16 ~~B-18; B-19, B-20 – B-23~~ of 24590-WTP-DB-PET-17-001~~24590-WTP-DB-PET-09-001~~, *Process Inputs Basis of Design (PIBOD) for LAW and EMF*; and 24590-WTP-M4C-V11T-00024, *WTP Process Flowsheet Mass & Energy Balance Analysis for Input to Material Selection Assessments,* for the fluid characteristics of the process streams.

3.4.1.8 Seismic Design

Requirement: The LMP system equipment, including PAM, shall be designed and qualified ~~for seismic conditions~~to perform their safety function under design basis seismic loads in accordance with Table 3-2 below. [Section 11.7.3, BOD] [Safety Criterion 4.1-3, SRD][Sections 4.4.3.2.3, 4.4.3.2.4, 4.4.3.3.3, 4.4.3.3.4, 4.4.3.5.3, 4.4.3.5.4, 4.4.4.1.1.3, 4.4.4.1.1.4, 4.4.4.1.2.3, 4.4.4.1.2.4, 4.4.4.1.3.3, 4.4.4.1.3.4, Table A-1, LAW-DSA] (A.0)

Table 3-2 LAW Melter Process System Seismic Design Categories

Description	Seismic Category	Reference
Melter ~~shell~~Shell • Pins and anchors preventing seismic induced motion of the melter assembly	**SC-III**	Section 4.4.3.3.3, 4.4.3.3.4, Table A-1, LAW-DSA~~Table 3A-7, Table C4-1, LAW-PDSA,~~
Melter Lid Cooling Cavity Cooling Water Confinement Boundary and Cooling Loop~~Melter Lid Cooling Cavity Cooling Water Confinement Boundary - Melter lid~~ • Confinment Boundary • PSVs (PSV-1641/1642/2641/2642) • LMP-RO-00001/00002 • LMP-TK-00001/00002 overflow lines	**SC-III**	Section 4.4.3.5.3, 4.4.3.5.4, Table A-1, LAW-DSA~~Table C4-1, LAW-PDSA~~ ~~SS-SSC maintains confinement during a seismic event~~
Melter Feed Nozzles Cooling Water Needle Valve ~~- Flow limiting valves in cooling water supply and return lines to the cooling jacket of the melter feed nozzles~~	**SC-III**	Section 4.4.3.2.3, 4.4.3.2.4, Table A-1, LAW-DSA~~Table 3A-7, LAW-PDSA~~
~~Melter Lid Cooling Cavity Over Pressure Protection System, PRVs - Pressure relief valves in melter lid cavity cooling water circuit credited to prevent melter lid cooling cavity over pressurization~~	~~**SC-III**~~	~~Table 3A-7, Section 4.4.26.3, LAW-PDSA~~
~~Melter Lid Cooling Cavity Over Pressure Protection System, Orifices - Flow limiting orifices in the PCW makeup lines to the melter lid cooling cavity surge tanks~~	~~**SC-III**~~	~~Table 3A-7, Section 4.4.26.3, LAW-PDSA~~
~~Melter Lid Cooling Cavity Over Pressure Protection System, Surge Tank - Melter lid cooling system surge tanks~~	~~**SC-III**~~	~~Table 3A-7, Section 4.4.26.3, LAW-PDSA~~
~~Melter Lid Cooling Cavity Over Pressure Protection System, Surge Tank Overflow Lines - Overflow lines from melter lid cooling system surge tanks~~	~~**SC-III**~~	~~Table 3A-7, Section 4.4.26.3, LAW-PDSA~~
Melter Plenum High Pressure Interlocks (Melter 1 and Melter 2)~~- LMP sensing and transmitting elements for high plenum pressure~~	**SC-III**	Sections 4.4.4.1.1.3, 4.4.4.1.1.4, Table A-1, LAW-DSA~~Table 3A-7, Table C4-1, LAW-PDSA~~
Melter Lid Cooling Cavity High Temperature Interlocks (Melter 1 and Melter 2)~~- LMP sensing and transmitting elements for high temperature in melter cooling lid cooling cavity~~	**SC-III**	Section 4.4.4.1.3.3, 4.4.4.1.3.4, Table A-1, LAW-DSA ~~Table 3A-7, Table C4-1, LAW-PDSA~~
Melter Lid Cooling Cavity Low Flow Interlocks (Melter 1 and Melter 2)	**SC-III**	Section 4.4.4.1.2.3, 4.4.4.1.2.4, Table A-1, LAW-DSA
~~Melter Annulus High Pressure Interlock - LMP sensing and transmitting elements for high annulus pressure and needs to perform its function during a seismic event~~	~~**SC-III**~~	~~Table C4-1, PDSA - LAW SS-SSC~~
~~Anchorages for utility lines that are of sufficient size and are located such that they could affect the function of SS equipment in a seismic event~~	~~**SC-III**~~	~~Table 3A-7, LAW-PDSA~~
~~Anchorages for cable trays located above SS equipment or piping~~	~~**SC-III**~~	~~Table 3A-7, LAW-PDSA~~

Basis Discussion: ~~As stated in 24590-WTP-PSAR-ESH-01-002-01, *Preliminary Documented Safety Analysis to Support Construction Authorization; General Information*, "All components and parts of the equipment that provide or contribute to the safety functions and accident monitoring functions, including equipment supports and anchorage, shall be qualified accordingly." This qualification ensures SSCs meet the designated seismic design requirements.~~ Safety Criterion 4.1-3 in the safety requirements document (SRD) details the equivalence of the WTP seismic category to the seismic performance category of DOE-STD-1020-94, *Natural Phenomena Hazards Design and Evaluation Criterial for Department of Energy Facilities*. The SRD also states that SSCs designated as safety SSCs withstand the effects of natural phenomena hazard events (e.g., earthquakes, wind, and floods) without loss of capability to perform specified safety functions. Table 3-3 of this document lists all the Safety Significant systems and components in LMP system.

~~Note on surge tank inclusion in Table C4-1, LAW-PDSA-Addendum, Melter Lid Cooling Cavity Over Pressure Protection and LAW-PDSA Section 4.4.26.3 states that while the surge tank is SC-III due to adverse interaction potential, it is not classified as safety significant (SS) as it does not play a support function for the overflow line's safety function.~~

3.4.1.10 Seismic Design for Interaction Effects

Basis Discussion: Equipment that is non-safety may be identified as having a potential for adverse interaction with safety equipment during a seismic event in accordance with 24590-WTP-GPG-ENG-033, *Evaluation for Seismic Interaction Effects*. Where a resolution strategy is selected to increase the seismic category of the source SSC to protect the safety (target) SSC, the resulting seismic category of the equipment may be greater than SC-IV. In those cases, the equipment design is verified to meet the higher seismic performance category such that the target SSC is protected. The SC-IV includes non-safety SSCs that required seismic protection per the Uniform Building Code (UBC). The SC-V items include lockers, bicycles racks, desks, etc. per 24590-WTP-GPG-M-036, *Subcomponent Safety Classification Process.*

~~Based on 24590-WTP-PSAR-ESH-01-002-01, *Preliminary Documented Safety Analysis to Support Construction Authorization; General Information*, seismic category IV piping is categorized as follows: (a) non-safety piping and without an inventory of radioactive or hazardous material, but require seismic protection; and (b) safety piping, but without seismic safety function. In accordance with 24590-WTP-GPG-M-036, *Subcomponent Safety Classification Process*, seismic category IV (SC-IV) are SSCs that do not provide primary confinement of significant inventories of radioactive materials. The SC-IV includes non-safety SSCs that required seismic protection per the Uniform Building Code (UBC).~~

~~As discussed in 24590-WTP-PSAR-ESH-01-002-01, *Preliminary Documented Safety Analysis to Support Construction Authorization; General Information*, SC-V piping does not require any seismic consideration. The SC-V items include lockers, bicycles racks, desks, etc. per 24590-WTP-GPG-M-036, *Subcomponent Safety Classification Process.*~~

3.4.2.1 Safety Classification

Requirement: The LMP SSCs shall be ~~designated~~ classified as safety SSCs in accordance with Table 3-3. ~~Structures, systems, and components designated as safety SSCs shall be designed, fabricated, erected, constructed, tested, inspected, and maintained to quality standards commensurate with the importance of the safety functions to be performed. Where generally recognized codes and standards are used, they shall be identified and evaluated to determine their applicability, adequacy, and sufficiency, and shall be supplemented or modified as necessary to assure a quality product in keeping with the required safety function.~~ [Safety Criterion 4.1-2, 4.1-3, 4.4-1, SRD][Sections 4.4.3.2.1, 4.4.3.3.1, 4.4.3.4.1, 4.4.3.5.1, 4.4.4.1.1.1, 4.4.4.1.2.1, 4.4.4.1.3.1, 4.4.4.1.25.1, Appendix A Table A-1, LAW-DSA]

Note: Safety instruments are also addressed separately in Section 3.14.2.

Table 3-3 LMP Safety Classifications

Equipment/ Component Description	Safety Function	Safety Significant (SC or SS)	References
Melter shell	The melter shell confinement boundary supports the melter offgas system primary confinement function.~~Preserves the ability of the plenum to direct offgas into offgas system piping, and prevents NO_x generating material from reaching the melter enclosure. Prevents leakage of bulk glass in the case of a refractory failure.~~	SS	Section 4.4.3.3.1, Table A-1, LAW-DSA ~~Tables C4-1, LAW PDSA~~
Melter Crush Pads	Melter Crush Pads reduce the probability of a release of radioactive and chemically hazardous material by absorbing impacts to the melter lid	SS	Section 4.4.3.4.1, Table A-1, LAW-DSA
Melter Feed Nozzles Cooling Water Needle Valve ~~Feed nozzle cooling water flow valves~~	The Melter Feed Nozzles Cooling Water Needle Valves reduce the probability of a release of radioactive and chemically hazardous material, caused by melter plenum over-pressurization, by limiting the amount of cooling water available to the jacket.~~Limits the maximum allowable flow of water to the melter feed nozzle cooling jackets.~~ ~~This safety function ensures that in the event of a cooling jacket breech, steam excursion in excess of the capability of the melter and offgas system to accommodate, resulting in a blockage of the offgas flowpath, will not occur.~~	SS	Section 4.4.3.2.1, Table A-1, LAW-DSA~~Tables C4-1, LAW PDSA~~
Melter Lid Cooling Cavity Cooling Water Confinement Boundary and Cooling Loop~~Melter lid cooling cavity cooling water confinement boundary~~	The Melter Lid Cooling Cavity Cooling Water Confinement Boundary limits the release of radioactive and chemically hazardous material by providing confinement of cooling water and maintaining melter structural integrity for a sufficient duration under degraded cooling conditions.~~The melter lid cooling compartment confinement boundary prevents loss of offgas confinement caused by cooling compartment structural breach.~~ ~~Provides adequate cooling of the melter lid plate that forms the top of the melter plenum gas barrier during normal operation, and limits the rate of temperature increase of the plate in the event of loss of cooling flow or function.~~	SS	Section 4.4.3.5.1, Table A-1, LAW-DSA~~Tables C4-1, LAW PDSA~~
	The Melter Lid Cooling Loop reduces the probability of a cooling compartment structural breach by limiting the water flow and pressure to the cooling compartment.	SS	

Equipment/ Component Description	Safety Function	Safety Significant (SC or SS)	References
~~Melter Lid Cooling Cavity Over Pressure Protection – Pressure relief valves (PRVs)~~	~~The over pressure protection SSCs associated with the melter lid cooling cavity must prevent failure of the melter lid cooling cavity due to over pressurization from the interfacing PCW closed loop cooling system. Without this safety function excess water into the melter can result in steam pressurization and loss of melter confinement.~~	~~SS~~	~~Section 4.4.26.3, LAW PDSA~~
~~Melter Lid Cooling Cavity Over Pressure Protection – Restricting orifice on the makeup water line~~	~~The over pressure protection SSCs associated with the melter lid cooling cavity must prevent failure of the melter lid cooling cavity due to over pressurization from the interfacing PCW closed loop cooling system.~~ ~~The orifice imits flow to the surge tank in the melter lid cooling water circuit to below the capacity of the tank overflow to ensure the surge tank is not a source of pressurization for the melter lid cooling cavity.~~ ~~Without this safety function, excessive water can be introduced into the melter plenum, resulting in steam pressurization and loss of melter confinement.~~	~~SS~~	~~Section 4.4.26.3, LAW PDSA~~
~~Melter Lid Cooling Cavity Over Pressure Protection- Surge tank overflow line~~	~~The over pressure protection SSCs associated with the melter lid cooling cavity must prevent failure of the melter lid cooling cavity due to over pressurization from the interfacing PCW closed loop cooling system.~~ ~~The surge tank overflow line works in conjunction with the flow restricting orifice to limit flow to the surge tank in the melter lid cooling water circuit to below the capacity of the tank overflow to ensure that the surge tank is not a source of pressurization for the melter lid cooling cavity.~~	~~SS~~	~~Section 4.4.26.3, LAW PDSA~~
Melter Lid Cooling Low Flow Interlocks (Melter 1 and Melter 2)	The interlock limits the release of radioactive and chemically hazardous material by reducing the material at risk in the affected melter in the event of a degradation of lid cooling ability.	SS	Section 4.4.4.1.2.1, Table A-1, LAW-DSA
	Reduces the probability of a release of radioactive and chemically hazardous material by preventing the final control elements of the SIS from failing in a manner that would cause a release.	SS	

Equipment/ Component Description	Safety Function	Safety Significant (SC or SS)	References
Melter Lid Cooling Water High Temperature Interlocks (Melter 1 and Melter 2)~~Melter lid cooling cavity high temperature interlock~~	The interlock limits the release of radioactive and chemically hazardous material by reducing the material at risk in the affected melter in the event of a degradation of lid cooling ability.~~The interlock limits the release of radioactive and chemically hazardous material by monitoring film cooler supply air flow and terminating melter feed to the affected melter in the event of a degradation of lid cooling ability.~~	SS	Section 4.4.4.1.3.1, Table A-1, LAW-DSA~~Tables C4-1, LAW-PDSA~~
	Reduces the probability of a release of radioactive and chemically hazardous material by preventing the final control elements of the Safety Instrumented System (SIS) from failing in a manner that would cause a release.	SS	
Melter plenum high pressure interlocks (Melter 1 and Melter 2)	The interlock limits the release of radioactive and chemically hazardous material by reducing melter offgas load to restore plenum vacuum in the event vacuum is degraded.~~The interlock limits the release of radioactive and chemically hazardous material by terminating melter feed to the affected melter in the event of melter pressurization.~~	SS	Section 4.4.4.1.1.1, Table A-1, LAW-DSA~~Tables C4-1, LAW-PDSA~~
	The interlock mitigates the consequences of facility worker exposure to radioactive and chemically hazardous material by initiating evacuation of the affected area.	SS	
	The interlock limits the release of radioactive and chemically hazardous material by reducing the material at risk in the affected melter if the control signal or air to an SIS component is lost.	SS	
	The interlock reduces the probability of a release of radioactive and chemically hazardous material by preventing the final control elements of the SIS from failing in a manner that would cause a release.	SS	
Melter Annulus High Pressure Interlocks (Melter 1 and Melter 2)	Mitigates the consequences of a melter offgas release by ensuring that the C5V system is providing sufficient negative pressure in the annulus and process cell while the melter is being fed.~~The interlock limits the release of radioactive and chemically hazardous material by monitoring the melter plenum header pressure and terminating melter feed to both melters in the event of high annulus pressures.~~	SS	Section 4.4.4.1.25.1, Table A-1, LAW-DSA~~Tables C4-1, LAW-PDSA~~

Equipment/ Component Description	Safety Function	Safety Significant (SC or SS)	References
	Reduces the probability of a release of radioactive and chemically hazardous material by preventing the final control elements of the SIS from failing in a manner that would cause a release.	SS	
~~Splash protection devices for SS SSCs located in pressure relief pathways~~	~~Prevent damage from water splashing above where SS SSCs are located under pressure relief pathways.~~	~~SS~~	~~Section 4.4.28.1, LAW PDSA~~

3.4.2.2 Room Environment Conditions for Safety SSCs

Requirement: The safety -equipment in the LAW Facility LMP system credited with a safety function(s) shall be designed and qualified to function as intended in the environments associated with the events for which they are intended to respond. Environmental qualification shall be to IEEE 323-83. The effects of aging on normal and abnormal functioning shall be considered in design and qualification using IEEE 323-83. For LBL Facilities only SS SSCs required to operate in harsh environments and credited for radiological and/or chemical hazards require qualification to IEEE 323-83. ~~and post accident monitoring instruments shall be designed and qualified to perform their safety/PAM function(s) as intended in the environment conditions associated with the events for which they are intended to respond, inclusive of aging effects throughout their qualified life.~~ [Safety Criterion 4.1-3, Safety Criterion 4.4-1, SRD] [Section 11.7.3, BOD]

Basis Discussion: Safety SSCs designated as SC or SS are designed and qualified to perform their safety function(s). ~~24590-LAW-U0D-W16T-00001, *LAW Room Environment Data Sheet* identifies environmental conditions for rooms that house safety SSCs and 24590-LAW-RPT-ENS-12-001, *LAW Post Accident Monitoring Report* identifies PAM instrumentation.~~
[ALARA]

Verification: Verification is expected to be achieved through the following:

Verif. Method	Verif. By	Plan	Notes/Comments
A/T	**ENG/ SUP**	Perform analysis or testing to verify the ability of the SSCs credited with a safety function to withstand the environmental conditions for which they are intended to respond.~~Perform analysis or testing to verify the ability of the SSCs credited with a safety function and post accident monitoring to withstand specified environmental conditions.~~	~~Refer to 2490-LAW-U0D-W16T-00001, *LAW Room Environment Data Sheet* for room environmental conditions and equipment data sheets for service conditions.~~
R	**ENG**	Review the design to verify that SS SSCs required to operate in harsh environments are environmentally qualified to IEEE 323-83 inclusive of the effects of aging on normal and abnormal functioning.	
R	**ENG**	Review the design to verify conformance to the as-tested or as-analyzed configuration.	~~Document in an evaluation/assessment report or EQP.~~

3.4.4.3 Removal of Melter Mechanical Equipment

Requirement: The LMP system's replaceable mechanical equipment shall be designed to be removable through removal routes into maintenance areas. [Section 11.3.2.3, BOD]

Basis Discussion: The design of the replaceable mechanical melter equipment provides the capability and sizing to be removed and moved though available routes to maintence areas. [ALARA]

Verification: Verification is expected to be achieved through the following:

Verif. Method	Verif. By	Plan	Notes/Comments
R	**ENG**	Perform inspection to verify the mechanical equipment is removable and sized to be movable through available routes to maintenance areas.	

3.5.2.1 Confinement of Offgas

Requirement: The LMP system shall operate under a cascading ventilation system and primary and secondary confinement zones that will direct plenum offgas into the LOP system. The melter shell provides the primary confinement boundary for the offgas. The melter enclosure shall provide the confinement boundary for the C5V ventilation in the annular space to prevent offgas excursions into the melter gallery, a C3 space. [Sections 8.1.4.2, 15.1, ORD] [Section 4.2-1, SRD] [Sections 5.1.2, 12.3.1.1, 12.3.2, 15.3.3, BOD] [Sections ~~III.10.I.1.c.ix,~~ III.10.I.1.c.x, DWP] ~~[Table C4-1, LAW-PDSA]~~ [Section 4.4.3.3.1, Appendix A Table A-1, LAW-DSA] (A.0.1), ~~(~~(D.1.1),(H.1.1.b)

Basis Discussion: The offgas from the cold cap is directed to the LOP system, preventing flow into the melter gallery.

The LOP, LVP, C5V, C3V, melter shell, and melter enclosure work together to set up a cascading ventilation system so the plenum will be at a lower pressure than the annular space, and the annular space will be at a lower pressure than the melter gallery. The melter shell and melter enclosure act as confinement barriers in this system. Neither the melter shell nor the melter enclosure are airtight. This allows air to be drawn through them into the plenum. ~~Refer to Section 3.6.2.4 of this SDD for air in-leakage requirements.~~ The ~~acceptable~~nominal pressure difference between the annulus and melter gallery is given in Section 3.3.B.2 of 24590-LAW-3PS-AE00-T0001 as −2.0 in. WG.

One way of controlling the ventilation is to inject air into the film cooler. The film cooler is part of the LOP system.

Specifications of nominal~~relative~~ vacuum pressures between the plenum, the annular space, and the melter gallery are given in Section 3.3.B.2 of 24590-LAW-3PS-AE00-T0001, *Engineering Specification for Low Activity Waste Melters*. Specific requirements for the melter shell and melter enclosure are given in Sections 3.6 and 3.9 of this SDD.

[ALARA]

3.5.2.2 Containment of Bulk Glass

Requirement: Bulk glass shall be contained inside of the refractory lining under normal operating conditions. ~~The melter shell shall prevent leakage of bulk glass in the event of refractory failures.~~ [Section 15.1, ORD] ~~[Table C4-1, LAW-PDSA]~~ [Sections 15.3.3, BOD] (A.0), (E.1.1)

Basis Discussion: The melter shell, refractory, cooling panels, and jack bolts form a containment system that contains the bulk glass to the interior of the melt pool. Jack bolts put external pressure on the cooling panels which compress the refractory to minimize joint separation between refractory blocks of the refractory material. The cooling panels cool the outside of the refractory so that any bulk glass that migrates through the refractory solidifies before reaching annular space. The refractory provides the primary containment for the bulk glass, the melter shell is secondary containment, and finally the melter enclosure is designed to contain a full melt pool from seeping into the melter gallery. Metallic plate dams, joined to discharge troughs, between refractory layers prevent glass migration into the discharge chamber (24590-QL-HC4-W000-00094-03-00001, *LAW Melter Design Basis Report).*

[ALARA]

Verification: Verification is expected to be achieved through the following:

Verif. Method	Verif. By	Plan	Notes/Comments
R	**ENG**	Review the design to confirm the melter shell is able to contain the bulk glass ~~in the event of a refractory failure~~.	
A	**ENG**	Perform an analysis on the melter shell to verify it is capable of containing all of the molten glass from the melt pool.	

3.5.2.3 Melter Crush Pads

Requirement: Melter crush pads covering horizontal surfaces of LMP-MLTR-00001/00002 structures (i.e., lid) shall be designed to prevent failure of the melter gas barrier when subjected to design basis load drops. Melter crush pads shall limit the energy imparted to the melter lid from drops that that could exceed the force needed to breach the melter lid confinement boundary. [Section 4.4.3.4.3, 4.4.3.4.4, LAW-DSA]

Basis Discussion: Melter crush pads reduce the probability of a release of radioactive and chemically hazardous material by absorbing impacts to the melter lid.

Verification: Verification is expected to be achieved through the following:

Verif. Method	Verif. By	Plan	Notes/Comments
A	**ENG**	Perform an analysis to verify when melter crush pads are subjected to design basis load drops, confinement of the melter gas barrier and offgas piping is maintained	
R	**ENG**	Review the melter design to verify the melter crush pads conform to the analysis.	

3.6.2.1 ~~Anchored Melter and Melter Enclosure~~DELETED – Combined in 3.4.1.8

~~**Requirement:** The melter and melter enclosure shall be anchored to prevent the extent of motion that could cause a loss of confinement during seismic events, up to and including the design basis earthquake. [Table C4-1, LAW-PDSA] (A.0)~~

~~**Basis Discussion:** Both the melter shell and the melter enclosure, as defined in PDSA, are welded to the base assembly. The melter shell and the melter enclosure are tied to the seismic restraints through the welds on the melter base assembly. Structural support for the melter shell is provided through the melter enclosure. The only item that has seismic clamps and pins is the LAW melter base assembly.~~

~~The melter shell is designed to remain intact to provide a confinement boundary to direct offgas to the offgas system. Structural support for the melter shell is provided through the melter enclosure. Having the melter fixed on the discharge side provides necessary seismic anchorage while also allowing thermal expansion on the other three sides of the melter. It is appropriate to have the melter shell fixed on the discharge chamber side to ensure the discharge trough and dam remain in a fixed position so they always line up with the pour spout. Anchoring the base of the melter shell may be accomplished via anchoring the base to the melter rails with anchor pins.~~

~~**Verification:** Verification is expected to be achieved through the following:~~

~~Verif. Method~~	~~Verif. By~~	~~Plan~~	~~Notes/Comments~~
~~A~~	~~ENG~~	~~Analyze system to ensure no loss of confinement during seismic events up to and including the design basis earthquake.~~	
~~R~~	~~ENG~~	~~Review the design for conformance to the analysis.~~	

3.6.2.3 ~~Loads from Vacuum~~Melter Shell Design Vacuum Loads

Requirement: The melter shell shall be designed for offgas confinement to withstand the maximum vacuum it can experience, given the presence of SS controls and flows directed through the stack. The melter shell shall be designed for up to -40 in. W.G. of vacuum. [Section 4.4.3.3.3, 4.4.3.3.4, Appendix A Table A-1, LAW-DSA]~~[Table C4-1, LAW-PDSA]~~ (A.0)

Basis Discussion: The design rating of a melter shell is such that it can withstand the vacuum, which it can experience given the LVP system reconfiguration control and the LOP system reconfigurations that will occur, as necessary, from the individual melter offgas system interlocks.

Verification: Verification is expected to be achieved through the following:

Verif. Method	Verif. By	Plan	Notes/Comments
A	**ENG**	Perform an analysis of the melter shell and supports capability to withstand the maximum -40 in. W.G. of vacuum.~~, which can occur given known LVP configurations.~~	The maximum vacuum for the melter is listed in Section 3.5.D.4 of 24590-LAW-3PS-AE00-T0001, *Engineering Specification for Low Activity Waste Melters*, as -40 in. WG.
R	**ENG**	Review the design to confirm that it conforms to an analysis of the melter shell and supports capability to withstand the maximum -40 in. W.G. of vacuum.~~, which can occur given known LVP configurations.~~	

3.6.2.4 ~~Allowance for Air In-Bleeds into the Plenum~~Melter Air Supply

Requirement: The ventilation system shall provide a dedicated air supply and return through the melter annular spaces between the shielding and inner shell, as well as in leakage to the melter plenum and offgas system.~~The melter air in-bleeds shall be sized to provide sufficient air intake to dilute the melter offgas to below the composite LFL throughout the offgas system. [Table C4-1, LAW-PDSA]~~ [Sections 15.3.3, BOD] (D.2)

Basis Discussion: Allowing for air in-bleeds into the annular space through the melter shell and into the plenum and offgas system assists in the following:

- The cascading ventilation system
- Precluding flammable gas concentrations in the plenum from reaching their lower flammability limit
- Minimizing the likelihood of deposition of corrosive material on the refractory

~~The anticipated rate of air in-bleeds is provided in Table 4 of calculation 24590-QL-HC4-W000-00094-05-00003, 00A, *LAW Melter In-Leakage and Purge Flow Rates*~~. This would be a combination of air entry to the melter

through the walls, bubblers, feed nozzles, small lid plug, pressure probes, level detector purge, thermowell, large lid plug, discharge chamber ventilation, standby film cooler injection air and standby offgas duct purges, and air input from the C5V into the annular space.

[ALARA]

Verification: Verification is expected to be achieved through the following:

Verif. Method	Verif. By	Plan	Notes/Comments
~~A~~	~~ENG~~	~~Analyze the LMP to determine the minimum amount of air in-bleeds to accomplish the functions listed in the requirement.~~	~~Refer to calculation 24590-QL-HC4-W000-00094-05-00003-00A, *LAW Melter In-Leakage and Purge Flow Rates.*~~
R	ENG	Review the design to verify the ventilation system provides a dedicated air supply and return to the melter, including in leakage and offgas. ~~of the melter shell and existing air supplies to the melter shell to verify there is sufficient air in-bleeds to meet the requirements above.~~	
~~T~~	~~SU/ COM~~	~~Verify the minimum in-leakage flow determined by the analysis above occurs.~~	

3.6.2.5 ~~Melter Shell to Remain Intact~~DELETED

~~**Requirement:** The melter shell shall remain intact in seismic events, up to and including the design basis earthquake. [Table C4-1, LAW-PDSA] (A.0)~~

~~**Basis Discussion:** The melter shell confinement boundary supports the melter offgas system primary confinement, thus any changes in melter shell due to seismic events may cause a loss of its primary confinement function.~~

~~**Verification:** Verification is expected to be achieved through the following:~~

~~Verif. Method~~	~~Verif. By~~	~~Plan~~	~~Notes/Comments~~
~~A~~	~~ENG~~	~~Perform analysis to confirm that melter shell will remain intact in seismic events up to and including the design basis earthquake.~~	
~~R~~	~~ENG~~	~~Review the design to confirm that melter shell design corresponds to the analysis and will remain intact in seismic events up to and including the design basis earthquake.~~	

3.6.2.6 ~~Provide Unobstructed Flow (Primary Pathway)~~DELETED

~~**Requirement:** The confinement boundary shall be capable of providing offgas confinement and an unobstructed flow path from the melter shell to the melter offgas system stack exit under design-basis temperatures and pressures. [Table C4-1, LAW-PDSA]~~

~~**Basis Discussion:** The confinement boundary mitigates the release of radioactive and chemically hazardous material by providing a primary release pathway from the melter through the melter offgas system exhausters and to the stack exit.~~

~~[ALARA]~~

~~**Verification:** Verification is expected to be achieved through the following:~~

~~Verif. Method~~	~~Verif. By~~	~~Plan~~	~~Notes/Comments~~
~~R~~	~~ENG~~	~~Review the design to confirm that design of the melter shell and melter lid allows for an unobstructed flow path from the melter shell to the melter offgas system stack exit under design-basis temperatures and pressures~~	

3.6.2.7 ~~Provide Unobstructed Flow (Secondary Pathway)~~DELETED

~~**Requirement:** The confinement boundary shall provide confinement and an unobstructed flow path of offgas from the melter shell to the SBS under design-basis temperatures and pressures. [Table C4-1, LAW-PDSA]~~

~~**Basis Discussion:** The confinement boundary mitigates the release of offgas to the melter gallery by providing a secondary release pathway to the unoccupied process cell.~~

~~[ALARA]~~

~~**Verification:** Verification is expected to be achieved through the following:~~

~~Verif. Method~~	~~Verif. By~~	~~Plan~~	~~Notes/Comments~~
~~R~~	~~ENG~~	~~Review the design to confirm that design of the melter shell and melter lid allows for an unobstructed flow path of offgas from the melter shell to the SBS under design-basis temperatures and pressures~~	

3.6.2.8 Melter Shell Confinement Boundary (Cooling Panels)~~Maintain Confinement Boundary During and After a Design-Basis Seismic Event~~

Requirement: The melter shell shall be designed to maintain the offgas confinement boundary on failure of cooling panels for at least 2 hours. Melters shall be designed to maintain its integrity and gas confinement functionality for exposure to molten glass at 2192 °F with 2.65 psi hydrostatic load at the bottom of the glass pool (30-inch glass depth), +40 in. W.G. pressure in the melter plenum space. [4.4.3.3.3, 4.4.3.3.4, Appendix A Table A-1, LAW-DSA]~~The confinement boundary shall maintain confinement of the melter offgas at pressures up to and including those associated with three exhausters during and after a design-basis seismic event. [Table C4-1, LAW-PDSA]~~

Basis Discussion: The confinement boundary, that includes melter shell mitigates the release of radioactive and chemically hazardous material by providing a primary release pathway from the melter through the melter offgas system exhausters and to the stack exit and needs to stay intact during and after a design-basis seismic event.

Verification: Verification is expected to be achieved through the following:

Verif. Method	Verif. By	Plan	Notes/Comments
A	**ENG**	Analyze the design of the melter shell portion of confinement boundary to confirm that confinement of melter off-gas will be maintained following a failure of the cooling panels for at least 2 hours and maintain integrity and gas confinement for exposure to molten glass at 2192 °F with 2.65 psi hydrostatic load at the bottom of the glass pool (30-inch glass depth), +40 in. W.G. pressure in the melter plenum space. ~~during and after a design basis seismic event~~	
R	**ENG**	Review design to verify conformance to analysis.	

3.7.2.1 Maintain Confinement (Melter Lid)

Requirement: The melter lid cooling cavity cooling water confinement boundary shall be designed to provide confinement until the cold cap is substantially removed. The melter lid cooling cavity cooling water confinement boundary shall be qualified for at least 2 hours after the loss of lid and (or) melter shell side/base cooling. [Section 4.4.3.5.3, 4.4.3.5.4, Appendix A Table A-1, LAW-DSA] ~~The melter lid cooling compartment confinement boundary shall prevent loss of offgas confinement caused by cooling compartment structural breach. The melter lid structure shall be designed and installed to provide confinement of the offgas, in case of loss of cooling water flow and (or) high cooling water temperature, until the cold cap is no longer substantially present. [Table C4-1, LAW-PDSA]~~ (A.0), (E.1.4)

Basis Discussion: The melter lid cooling cavity cooling water confinement boundary limits the release of radioactive and chemically hazardous material by providing confinement of cooling water and maintaining melter structural integrity for a sufficient duration under degraded cooling conditions. If the melter lid is deformed due to overheating, confinement of the offgas is compromised. ~~The melter lid cooling cavity provides cooling water to prevent overheating of the gas barrier lid.~~

Verification: Verification is expected to be achieved through the following:

Verif. Method	Verif. By	Plan	Notes/Comments
A	**ENG**	Analyze the heat transfer from the melter lid cooling cavity to determine the flow rate and temperature of the cooling water needed to maintain confinement and integrity for at least 2 hours after the loss of lid and/or melter shell side/base cooling.	1. Refer to 24590-LAW-M2C-LMP-00001, *Thermal Analysis of Gas Barrier Lid,* and 24590-LAW-M2C-LMP-00002, *LMP-MLTR-00001 & LMP-MLTR-00002, LAW Melter Units, Structural and Seismic Analysis with ANSYS.* 2. Refer to 24590-LAW-M2C-LMP-00002, *LMP-MLTR-00001 & LMP-MLTR-00002, LAW Melter Units, Structural and Seismic Analysis with ANSYS.*
R	**ENG**	Review design to verify conformance to analysis.	

3.7.2.3 Elevated Piping Inlet and Outlet

Requirement: The inlet and outlet for the melter lid cooling cavity shall be elevated near the top of the cavity, to limit loss of water mass in the lid cooling cavity should a leak develop in the cooling water circuit. The inlet and outlet of the melter lid cooling cavity shall penetrate the top of the lid, thus precluding gravity drain of the cooling cavity through these flow paths. [Section 4.4.3.5.3, 4.4.3.5.4, LAW-DSA] ~~[Table C4-1, LAW-PDSA]~~

Basis Discussion: This is needed to limit loss of water mass in the lid cooling cavity (for the duration of the melter cold cap) should a leak develop in the cooling water circuit. The main purpose of the melter lid cooling cavity is to provide cooling water for the gas barrier lid. The melter lid cooling cavity sits directly on top of the gas barrier lid plates.

Verification: Verification is expected to be achieved through the following:

Verif. Method	Verif. By	Plan	Notes/Comments
R	**ENG**	Review the design to verify the piping inlets and outlet for the melter lid cooling cavity are located toward the top of the cavity and penetrate the top of the lid.	

3.7.2.5 ~~Melter Lid Seismic Event Off-Gas Confinement~~DELETED – Combined in 3.4.1.8

~~**Requirement:** The melter lid structure shall maintain confinement of the offgas in seismic events of intensity up to and including the design basis earthquake. [Table C4-1, LAW-PDSA]~~

~~**Basis Discussion:** The melter lid cooling cavity will be constructed so, that in case of seismic events of intensity up to and including the design basis earthquake, lid will have to maintain the offgas confinement.~~

~~**Verification:** Verification is expected to be achieved through the following:~~

~~Verif. Method~~	~~Verif. By~~	~~Plan~~	~~Notes/Comments~~
~~**A**~~	~~**ENG**~~	~~Perform analysis to confirm that melter lid structure will maintain confinement of the offgas in seismic events of intensity up to and including the design basis earthquake~~	
~~**R**~~	~~**ENG**~~	~~Review design to verify conformance to analysis~~	

3.8.2.1 Melter Lid Cooling Cavity Cooling Water Overpressurization~~PRV Setting~~

Requirement: The melter lid cooling cavity cooling water confinement boundary shall be protected from overpressurization. PSVs along the melter lid cooling water flow path (PSV-1641/-1642/-2641/-2642) shall maintain system pressure less than or equal to 14.5 psig. [Section 4.4.3.5.3, 4.4.3.5.4, Appendix A Table A-1, LAW-DSA] ~~The PRV for each melter lid cooling water circuit shall be set such that the melter lid cooling cavity does not exceed its design pressure as a result of failure of the interface between the melter lid cooling water system and the PCW system. [Section 4.4.26.3, LAW-PDSA]~~ (E.1.4.1)

Basis Discussion: The melter lid cooling loop reduces the probability of a cooling compartment structural breach by limiting the water flow and pressure to the cooling compartment. The over pressure protection SSCs associated with the melter lid cooling cavity prevents failure of the melter lid cooling cavity due to over pressurization from the interfacing PCW closed loop cooling system. Without this safety function, excessive water can be introduced

into the melter plenum, resulting in steam pressurization and loss of melter confinement. Water used for the melter lid cooling cavity circulates in a closed loop, separated from the PCW used for cooling panels by a heat exchanger. This loop has several over pressure protection measures, such as a vented surge tank and pressure safety valves.

Verification: Verification is expected to be achieved through the following:

Verif. Method	Verif. By	Plan	Notes/Comments
A	**ENG**	Perform analysis to establish set points for the PRVs for each melter lid cooling water circuit so that the melter lid cooling cavity does not exceed its design pressure as a result of failure of the interface between the melter lid cooling water system and the PCW system.	
R	**ENG**	Review design documents to verify that PSV-1641/-1642/-2641/-2642 maintain the system pressure less than or equal to 14.5 psig.~~Review design to verify conformance to analysis~~	

3.8.2.6 ~~Restricting Orifice~~Melter Lid Cooling Loop Orifices Restriction

Requirement: Melter 1 and 2 tank makeup water restriction orifices (LMP-RO-00001/-00002) shall maintain makeup water flow to the melter lid cooling loop within analyzed limits. LMP-RO-00001 and -00002 shall limit the flow to no greater than 50 gpm. [Sections 4.4.3.5.3, 4.4.3.5.4, Appendix A Table A-1, LAW-DSA]~~The orifice on the makeup water line from the PCW system to the surge tank on each melter lid cooling water circuit shall be sized such that the flow to the surge tank from the PCW system is below the capacity of the tank overflow. [Sections 4.4.26.3, LAW-PDSA]~~

Basis Discussion: The surge tank is only vented to the atmosphere—not open to the atmosphere—so there is a chance that a pressure head could build up in the tank if it is overfilled to the point of water rising into the vent. The orifice limits water flow into the surge tank to the rate that the overflow line can handle. The allowable flow rate of the makeup water is dependent on the size of the surge tank's overflow line, so the overflow line and the orifice designs depend on each other.

Verification: Verification is expected to be achieved through the following:

Verif. Method	Verif. By	Plan	Notes/Comments
A	**ENG**	Perform the analysis to size the orifice on the makeup water line to maintain makeup water flow to the melter lid cooling loop no greater than 50 gpm.~~from the PCW system to the surge tank on each melter lid cooling water circuit orifice such that the flow to the surge tank from the PCW system is below the capacity of the tank overflow~~	
R	**ENG**	Review the design to verify the orifice is sized to limit the flow to no greater than 50 gpm. ~~the flow rate the overflow line can accommodate.~~	
T	**SU/ COM**	Test to verify that LMP-RO-00001 and -00002 limit the makeup flow to no greater than 50 gpm.	

3.8.2.7 ~~Overflow Line Support~~DELETED

~~**Requirement:** The overflow line for each cooling water circuit shall be supported independently of the surge tank. [Sections 4.4.26.3, LAW-PDSA]~~

~~**Basis Discussion:** The overflow line has its own support structure and is not dependent on its associated surge tank for source in a seismic event. While the surge tank is SC-III due to adverse interaction potential, the surge tank is not classified as SS because it does not play an important role in the overflow line's safety function.~~

~~**Verification:** Verification is expected to be achieved through the following:~~

~~Verif. Method~~	~~Verif. By~~	~~Plan~~	~~Notes/Comments~~
~~R~~	~~ENG~~	~~Review design to verify overflow lines for each cooling water circuit are supported independently from the surge tank~~	

3.8.2.8 Melter Lid Cooling Loop Overflow Line Sizing

Requirement: Each atmospheric surge tank (LMP-TK-00001/-00002) shall have an overflow line sized such that the flow received from the PCW system cannot pressurize the tanks and the melter lid cooling system. LMP-TK-00001 and -00002 shall have a 4 inch nominal outer diameter overflow line (Nozzle 2). [Sections 4.4.3.5.3, 4.4.3.5.4, Appendix A Table A-1 LAW-DSA] ~~The overflow line of the surge tank on each melter lid cooling water circuit shall be sized to accommodate the maximum flow through the orifice on the makeup water line. [Sections 4.4.26.3, LAW-PDSA]~~

Basis Discussion: This is required to ensure that the surge tank is not a source of pressurization for the melter lid cooling cavity

Verification: Verification is expected to be achieved through the following:

Verif. Method	Verif. By	Plan	Notes/Comments
A	**ENG**	Perform an analysis to verify the overflow line is sized to accommodate the PCW flow without pressurizing the tanks and melter lid cooling system. ~~maximum flow through the orifice on the makeup water line.~~	
R	**ENG**	Review the design to verify the overflow line on LMP-TK-00001 and -00002 have at least a 4 inch nominal outer diameter overflow line.~~is sized to accommodate the maximum flow through the orifice on the makeup water line.~~	

3.11.2 Nuclear Safety, ALARA, Environmental, and Other Regulatory Requirements

3.11.2.1 Melter Shell Water Accumulation Prevention

Requirement: The design of the melter ~~must~~ shall prevent the accumulation of water between the cooling panels and the melter refractory. The cooling panels shall be located on the outboard side of the melter refractory and the gas barrier shall be equipped with a drain capacity equal to or exceeding 88 gal/min. [4.4.3.3.3, 4.4.3.3.4,

Appendix A Table A-1, LAW-DSA] ~~There shall be no sealed cavities between the cooling panels and the melter refractory. [Table C4-1, LAW-PDSA]~~ (F.1)

Basis Discussion: The system needs to be designed so that in the event of a cooling panel rupture, the cooling water drains toward the melter drains and away from the refractory and melt pool to prevent damage to the melter.

Verification: Verification is expected to be achieved through the following:

Verif. Method	Verif. By	Plan	Notes/Comments
R	ENG	Review the design to verify that no sealed cavities exist between the cooling panels and the melter refractory, that cooling panels are located outboard of the melter refractory, and gas barrier is equipped with a drain capacity equal to or exceeding 88 gal/min.~~so the cooling water from all cooling panels can drain freely away from the refractory in the event of a cooling panel rupture.~~	Refer to 24590-LAW-M6C-LMP-00022, Analysis for Handling Water Leakage Inside the LAW Melter Shell.~~**Refer to** 24590-LAW-M6C-LMP-00022**, Analysis for Handling Water Leakage Inside the LAW Melter Shell.**~~

3.14.2.1.1 Melter Plenum High Pressure Interlock

3.14.2.1.1.1 Melter Plenum High Pressure Interlock (Limit Offgas Generation)

Requirement: Upon detection of high melter plenum pressure (Melter 1 - LMP-PDT-1528/1529, Melter 2 - LMP-PDT-2528/2529), the interlock shall limit offgas generation rate from the affected melter and support offgas system flow by operating the valves (final elements listed below). The interlock shall terminate sources of melter pressurization if melter plenum pressure reaches or exceeds -0.1 in. W.G. relative to the annulus. The interlock shall open melter primary and secondary film cooler air emergency air inbleed valves no sooner than 120 seconds after PPJ high plenum pressure trip terminating plant service air to the film coolers (to allow vacuum to be reestablished in melter if lost).

- Melter 1:
  - Shut ADS air supply (LFP-YV-1208/1212),
  - Shut ADS water supply (LFP-YV-1207/1211)
  - Shut film cooler air (LOP-YV-1129/1404)
  - Shut film cooler water (LOP-YV-1109/1405)
  - Shut WESP air (LOP-YV-1098/1161)
  - Open standby offgas line (LOP-YV-1008)
  - Open primary offgas film cooler air inbleed (LOP-YV-1401/1407)
  - Open standby offgas film cooler air inbleed (LOP-YV-1402/1406)
  - Open WESP outlet valve (LOP-FV-1140)
- Melter 2:
  - Shut ADS air supply (LFP-YV-2208/2212),
  - Shut ADS water supply (LFP-YV-2207/2211)
  - Shut film cooler air (LOP-YV-2129/2404)
  - Shut film cooler water (LOP-YV-2109/2405)
  - Shut WESP air (LOP-YV-2098/2161)
  - Open standby offgas line (LOP-YV-2008)
  - Open primary offgas film cooler air inbleed (LOP-YV-2401/2407)
  - Open standby offgas film cooler air inbleed (LOP-YV-2402/2406)

- Open WESP outlet valve (LOP-FV-2140)

[Sections 4.4.4.1.1.3, 4.4.4.1.1.4, Appendix A Table A-1, LAW-DSA] (H.2.1) (H.2.1.1), (H.2.1.2), (H.2.1.3), (H.2.1.4)~~Instrumentation (Melter Plenum High Pressure Interlock) shall be provided to monitor the melter plenum header pressure. The instrumentation shall perform its function in seismic events of intensity up to and including the design basis earthquake. Upon detection of high pressure (reduced vacuum) in the melter plenum, the Melter Plenum High Pressure Interlock shall:~~

- ~~Stop air to the ADS pumps for the affected melter (LFP).~~
- ~~Stop ADS flush water to the affected melter (LFP).~~
- ~~Stop air and water flow to the associated primary and standby film coolers (LOP).~~
- ~~Open the associated primary and standby film cooler emergency air inbleeds (LOP).~~
- ~~Open the associated bypass valve from the standby film cooler to the SBS (LOP).~~
- ~~Stop air flow to the associated WESP (LOP).~~
- ~~Initiate an evacuation alarm in areas where airborne concentrations of hazardous material can exceed FW exposure limits prior to personnel evacuation time (PPJ).~~

~~[Table C4-1, LAW-PDSA] (H.2.1) (H.2.1.1), (H.2.1.2), (H.2.1.3), (H.2.1.4)~~

Basis Discussion: A high plenum pressure, identified by Melter Plenum High Pressure Interlock, indicates a loss of vacuum in the plenum, which could lead to a loss of offgas confinement. This confinement is important only when a cold cap exists. Offgas is created while a cold cap reacts with the melt pool. After the cold cap has dissolved into the melt pool, there is no potential for an offgas release. The plenum pressure~~-~~ is measured as differential pressure relative to the annulus.

The analytical limit calculation (24590-LAW-M6C-LMP-00018) determined that to protect the design limit for each of these scenarios the interlock must activate at a plenum pressure of no greater than −0.1 in. WC relative to the melter annulus. This is the analytical limit for the Melter Plenum High Pressure Interlocks. The setpoint calculation (24590-LAW-J3C-PPJ-00001, *Setpoint Calculation for Melter Plenum and Annulus High Pressure Interlocks*) protects the analytical limit to account for instrument uncertainties, resulting in a limiting trip setpoint (LTSP) to activate the interlock when the pressure in the melter plenum reaches not more than −0.304 in. W.G.

[ALARA]

Verification: Verification is expected to be achieved through the following:

Verif. Method	Verif. By	Plan	Notes/Comments
R	**ENG**	Review the design for incorporation of the interlock.	
T	**SU/ COM**	Perform a test to verify the following functions are performed upon detection of high pressure (reduced vacuum) in the melter plenum: • Close ADS air supply valves (LFP) • Close ADS water supply valves (LFP) • Close film cooler water supply valves (LOP) • Close WESP air valves (LOP) • Close film cooler air supply valves (LOP)	The PPJ, LMP, LFP, and LOP systems are required to be operational to perform this test.

		• Open standby film cooler isolation valves (LOP) • Open primary film cooler emergency air inbleed valves (LOP) - no sooner than 120 seconds after trip • Open standby film cooler emergency air inbleed valves (LOP) - no sooner than 120 seconds after trip • Open WESP outlet valves (LOP) ~~• Stops air to the ADS pumps for the affected melter upon detection of high plenum pressure (LFP).~~ ~~• Stops ADS flush water to the affected melter upon detection of high plenum pressure (LFP).~~ ~~• Stops air and water flow to the associated primary and standby film coolers upon detection of high plenum pressure (LOP).~~ ~~• Opens the associated primary and standby film cooler emergency air inbleeds upon detection of high plenum pressure (LOP).~~ ~~• Opens the associated bypass valve from the standby film cooler to the SBS upon detection of high plenum pressure (LOP).~~ ~~• Stops air flow to the associated WESP upon detection of high plenum pressure (LOP).~~ ~~• Initiate an evacuation alarm in areas where airborne concentrations of hazardous material can exceed FW exposure limits prior to personnel evacuation time (PPJ).~~	

3.14.2.1.1.2 Melter Plenum High Pressure Interlock (Area Evacuation)

Requirement: Upon detection of high melter plenum pressure (Melter 1 - LMP-PDT-1528/1529, Melter 2 - LMP-PDT-2528/2529), the interlock must prompt evacuation by initiating room LM0130, LM0130A, LM0130D, and LC0106-4 annunciators (Melter 1 - LMP-PDY-1528/1529, Melter 2 - LMP-PDY-2528/2529). The interlock shall activate evacuation alarms if melter plenum pressure reaches or exceeds −0.1 in. WG relative to the annulus. [Sections 4.4.4.1.1.3, 4.4.4.1.1.4, Appendix A Table A-1, LAW-DSA]

Basis Discussion: A high plenum pressure, identified by Melter Plenum High Pressure Interlock, indicates a loss of vacuum in the plenum, which could lead to a loss of offgas confinement. This confinement is important only when a cold cap exists. Offgas is created while a cold cap reacts with the melt pool. After the cold cap has dissolved into the melt pool, there is no potential for an offgas release. The plenum pressure is measured as differential pressure relative to the annulus.

[ALARA]

Verification: Verification is expected to be achieved through the following:

Verif. Method	Verif. By	Plan	Notes/Comments
T	SU/ COM	Perform a test to verify the following functions are performed upon detection of high pressure (reduced vacuum) in the melter plenum: Initiate audible evacuation alarms in LM0130, LM0130A, LM0130D, and LC0106-4 (LMP)	The PPJ system is required to be operational to perform this test.

3.14.2.1.3 Melter Lid Cooling ~~Cavity~~ Water High Temperature Interlock

Requirements: Upon detection of elevated melter lid cooling loop temperature (Melter 1 - LMP-TT-1654/1655, Melter 2 - LMP-TT-2654/2655), the interlock shall terminate feed to the affected melter by shutting the ADS air supply valves (Melter 1 - LMP-YV-1208/1212, Melter 2 - LMP-YV-2208/2212). The interlock shall terminate ADS air supply after detection of melter lid cooling loop temperature greater than or equal to 121.7°F. [Section 4.4.4.1.3.3, 4.4.4.1.3.4, Appendix A Table A-1, LAW-DSA] (H.1.1.d), (H.2.2), (H.2.2.1)~~Instrumentation (Lid Cooling Cavity High Temperature Interlock) shall be provided to monitor cooling water temperature and flow. This interlock shall perform its function in seismic events of intensity up to and including the design basis earthquake. Upon detection of high cooling water temperature or low cooling water flow the Lid Cooling Cavity High Temperature Interlock shall:~~

- ~~Stop air to the ADS pumps for the affected melter (LFP).~~

~~[Tables C4-1, LAW-PDSA] (H.1.1.d), (H.2.2), (H.2.2.1)~~

Basis Discussion: High temperature within Lid Cooling Cavity may indicate a loss of normal cooling water flow through the lid cooling cavity, which could lead to a degradation of the lid and a loss of off-gas confinement.

Verification: Verification is expected to be achieved through the following:

Verif. Method	Verif. By	Plan	Notes/Comments
A	ENG	Analyze the system to determine the set point for the cooling water temperature~~ and cooling water flow into the lid that will trigger the high temperature and low pressure reading in the PPJ system~~.	
R	ENG	Review the design for incorporation of the interlock with cooling water temperature and flow monitoring capabilities, including the temperature instrumentation specified by the DWP	CTNs specified by Table III.10.H.C, DWP Melter 1 LMP-TE-1640, LMP-TT-1293, LMP-TI-1640 Melter 2 LMP-TE-2640, LMP-TT-2293, LMP-TI-2640
T	SU/ COM	Perform a test to verify that airflow to the ADS pumps is stopped for the affected melter at detection of melter lid cooling loop temperature greater than or equal to 121.7°F. ~~high cooling water temperature~~	
~~T~~	~~SU/ COM~~	~~Perform a test to verify that airflow to the ADS pumps is stopped for the affected melter upon detection of low cooling water flow~~	

3.14.2.1.4 Melter Annulus High Pressure Interlock

Requirement: Upon detection of annulus high pressure (Melter 1 - LMP-PDT-1596/1597, Melter 2 - LMP-PDT-2596/2597), the interlock shall terminate feed to both melters by closing the following valves (Melter 1 - LMP-YV-1208/1212, Melter 2 - LMP-YV-2208/2212). The interlock shall terminate melter feed if annulus pressure relative to C3V (melter gallery) is greater than or equal to -1.2 in. W.C. relative to the melter gallery (24590-LAW-M6C-LMP-00024). [Section 4.4.4.1.25.3, 4.4.4.1.25.4, Appendix A Table A-1, LAW-DSA]~~Instrumentation (Melter Annulus High Pressure Interlock) shall be provided to monitor pressure in the melter annulus. Upon detection of high annulus pressure the interlock shall:~~

- ~~Stop air to the ADS pumps to both melters (LFP) [Table C4-1, LAW-PDSA]~~

Basis Discussion: Melter Annulus High Pressure Interlock limits the release of radioactive and chemically hazardous material by terminating melter feed to both melters in the event of high annulus pressures.

Verification: Verification is expected to be achieved through the following:

Verif. Method	Verif. By	Plan	Notes/Comments
A	**ENG**	Analyze the system to determine the set point for the annulus pressure relative to C3V (melter gallery) is greater than or equal to -1.2 in. W.C. ~~that will trigger the high pressure reading in the PPJ system.~~	
R	**ENG**	Review the design to verify it includes the pressure instrumentation ~~that~~ listed in the requirement to monitor~~s~~ the melter annulus pressure ~~and the presence of the interlock in the design~~.	
T	**SU/ COM**	Perform a test to verify that airflow to the ADS pumps is stopped on both melters upon detection of annulus pressure relative to C3V (melter gallery) is greater than or equal to -1.2 in. W.C. ~~high annulus pressure~~	

3.14.2.1.5 Melter Lid Cooling Cavity Low Flow Interlock

Requirements: Upon detection of reduced melter lid cooling loop flow (Melter 1 - LMP-FT-1652/1653, Melter 2 - LMP-FT-2652/2653), the interlock shall terminate feed to the affected melter by operating the ADS air supplyvalves (Melter 1 - LMP-YV-1208/1212, Melter 2 - LMP-YV-2208/2212). The interlock shall terminate ADS air supply after detection of melter lid cooling loop flow less than 15 gpm. [Sections 4.4.4.1.2.3, 4.4.4.1.2.4, Appendix A Table A-1, LAW-DSA] (H.1.1.d), (H.2.2), (H.2.2.1)

Basis Discussion: Low cooling water flow to the Lid Cooling Cavity could lead to a degradation of the lid and a loss of off-gas confinement.

Verification: Verification is expected to be achieved through the following:

Verif. Method	Verif. By	Plan	Notes/Comments
A	**ENG**	Analyze the system to determine the set point for the cooling water flow into the lid.	
T	**SU/ COM**	Perform a test to verify that airflow to the ADS pumps is stopped for the affected melter upon detection of melter lid cooling loop flow less than 15 gpm	

3.15.2.2 Melter Feed Nozzle Cooling Needle Valves~~Restriction of Cooling Water Supply for Melter Feed Nozzle Cooling~~

Requirement: The melter feed nozzle cooling water needle valves shall restrict cooling water flow to a rate that cannot result in water addition and steam generation above the design capability of the offgas system at fixed exhauster speeds. The melter feed nozzle cooling water needle valves shall limit the flow rate of cooling water to less than or equal to 22.8 gpm. [Sections 4.4.3.2.3, 4.4.3.2.4, Appendix A Table A-1, LAW-DSA] ~~The LMP system cooling water supply and return lines to the cooling jackets of the melter feed nozzles shall each contain a flow-limiting needle valve. Needle valves shall restrict cooling water flow to a rate that cannot result in water addition and steam generation above the design capability of the off-gas system. [Table C4-1, LAW-PDSA]~~ (E.1.2)

Basis Discussion: The LMP system cooling water supply and return lines to the cooling jackets of the melter feed nozzles each contain a flow-limiting needle valves. The function of the needle valve is to limit the maximum allowable flow of water to the feed nozzle cooling jackets. Limiting the flow to the cooling jackets limits the amount of water that could go into the plenum in the event of a cooling jacket breach. Cooling water is kept out of the plenum to prevent a buildup of steam that could pressurize the melter.

Verification: Verification is expected to be achieved through the following:

Verif. Method	Verif. By	Plan	Notes/Comments
A	**ENG**	Analyze the system to determine the size of the flow limiting needle valves, that are capable of restricting cooling water flow to less than or equal to 22.8 gpm for the postulated case where a breach occurs in the cooling jacket. ~~to a rate that cannot result in water addition and steam generation above the design capability of the off-gas system~~	
R	**ENG**	Review the design to verify the design has the flow limiting needle valves that are capable of restricting cooling water flow to less than or equal to 22.8 gpm for the postulated case where a breach occurs in the cooling jacket. ~~to a rate that cannot result in water addition and steam generation above the design capability of the off-gas system.~~	
T	**SU**	Perform a test to verify that flow limiting needle valves ~~are capable of restricting~~ restrict cooling water flow to less than or equal to 22.8 gpm for the postulated case where a breach occurs in the cooling jacket. ~~to a rate that cannot result in water addition and steam generation above the design capability of the off-gas system~~	

3.15.3.1 Bubblers

Requirement: The LMP system melter design shall include bubblers to inject compressed gas continuously into the molten melt pool to provide agitation to aid the mixing of the melting cold cap with the rest of the melt pool. [Section 15.3.3, BOD] ~~[Section 4.4.31.2, LAW-PDSA]~~ (A.2.2), (A.3.1)

3.16.1 Codes of Record

Table 3-5 LAW Melter Process System Applicable Codes and Standards

Implementing Codes and Standards: [24590-WTP-RPT-OP-01-001, Rev 5, Operations Requirements Document, (ORD)]
• NEMA 250, *Enclosures for Electrical Equipment (1000 Volts Maximum).* National Electric Manufacturers Association, Reston, VA.[1]
Notes: [1] The LAW ~~PDSA~~ DSA specifies that design of selected portions of the LMP system per this code or standard is a credited design feature to help ensure the robustness of the design in support of the nuclear safety hazards analysis and selection of controls. [2] This code or standard from the SRD applies to components of the LMP system that have a safety function.

4 System Description

4.1.6.1.5 Melter Discharge and Pouring Monitoring

Glass pours are periodic and limited by the glass production rate. Once pouring begins, the glass stream can be monitored by a second CCTV PTJ-XT-2093. Infrared camera LMP-LE-1466 detects IR radiation emitted from the "thermal transition region" of the container surface to "see" the glass fill level in a container. The IR camera provides a thermal image and only measures level during indications of an occurring glass pour allowing for continual glass level monitoring during stop/restart glass pour cycles. The image is analyzed, and a level (in) is indicated by LMP-LI-1466B for the west side fill station. The east side level (in) is indicated by LMP-LI-1511B. The metal container conducts heat very well. Thermal "shine" from the hot glass inside the interior container heats the whole container, which makes it difficult to see the glass fill level inside the container. Therefore, external air knives differentially cool the metal container more above the level of hot glass, which improves visibility of the thermal image fill line. These fill indicators (in) LMP-LI-1511B (east) and LMP-LI-1466B (west) each have high and high high alarms ~~LMP-LI-1511B (east) and LMP-LI-1466B (west)~~. There is a secondary level monitoring of container fill weight by the LPH system. Listed below are the LPH container weight and position sensors that have outputs interlocked to corresponding LMP pour valves and level transmitters to prevent glass pouring when a container is not present or in pouring position.

LPH Container Weight Sensor	LPH Container Position Sensor	LMP Pour Valve Controler	LMP Level Transmitter
LPH-WE-4005A/B	LPH-ZS-4001	LMP-YC-1047	LMP-LT-1511
LPH-WE-5205NB	LPH-ZS-5201	LMP-YC-2047	LMP-LT-2511
LPH-WE-3505NB	LPH-ZS-3501	LMP-YC-1125	LMP-LT-1466
LPH-WE-4605Af8	LPH-ZS-4601	LMP-YC-2125	LMP-LT-2466

4.2.3.6 Operational Restrictions for Normal Operations

Calculation *24590-LAW-M2C-LMP-00002, LMP-MLTR-00001 & LMP-MLTR-00002, LAW Melter Units, Structural and Seismic Analysis with ANSYS,* states in Section 8.5 that the melter lids are suitable for use at ~~its~~ the currently specified design conditions. This includes a limitation of up to two 6,000 lb point loads (per ~~section~~ Section 2.6.3 of *24590-LAW-M2C-LMP-00002),* as well as additional limitations and allowances not required per the ~~PDSA~~ LAW DSA or BOD. This ~~two 6,000 lb allowance~~limitiation covers the requirement for having a 5,000 lb point load to address consumable change-out activities.

4.2.3.7 Operational Restrictions for Normal Operations During Crane Operations Over the Non-Idle Melter.

4.2.3.7.1 Crane Loads Carried Over Operating Melters

Calculation 24590-LAW-M2C-LMP-00007, *LAW Melter Shield Lid Dropped Load Analysis with ANSYS*, shows that the following restrictions should be applied to the operation of the crane above the melter in case of operational melter, see Section 8.3 of the calculation for details.

Table 4-17 Limits for Crane Loads Carried Over Operating* Melters

Carried Weight (lbs)	Max Carry Height (inches)**
2001-3500	6”
1001-2000	10”
501-1000	18”
1-500	36”

*Operating is defined as a melter unit which has concerns for gas release (e.g. NO_x) in the event of breach of confinement. This is typically a melter in active glass production, and is not when a melter is in idle-mode (no cold cap).
** Referenced restrictions are active when melter crush pads are not in place.

Additional limitations include a crane-carry-over exclusion area for crane transport of equipment and that no equipment may be staged atop of the melter during crane carry-over operations. These limitations are described in Sections 8.3.2.and 8.3.3 of the 24590-LAW-M2C-LMP-00007.

4.2.3.7.2 Crane Load Heights Over Operating Melters

Per calculation 24590-LAW-M2C-LMP-00016 (Section 5.1), all equipment including the Consumable Changeout Box (CCB), 3,500 lbs, and the Melter Gamma Gate (MGG), 2,200 lbs, will be limited to a drop height of 2 feet when melter crush pads are in place. This is the distance from the bottom of the object to the top of the Melter Shield Lid. This is implemented by administrative actions taken by Operations to ensure that the lifting of objects does not exceed this height restriction for the items being transported over the Melter Shield Lid of an operating* LAW Melter.

*Operating is defined as a melter unit which has concerns for gas release (e.g. NO_x) in the event of breach of confinement. This is typically a melter in active glass production, and is not when a melter is in idle-mode (no cold cap).

4.2.6 Safety Management Programs and Administrative Controls

The LMP system will comply with all safety management programs applicable and available to this system, including ALARA programs and radiological procedures. Additional administrative controls unique to this system are discussed below.

Facility modes relative to the melter are defined ~~in the PDSA~~ as follows:

- Normal operation: Melter is operable, where feed and a cold cap are present, or could be present. This mode would include melter idle, but ready to initiate feed.
- Standby operation: Melter is hot and in idle with no cold cap, and with feed capability is disabled.
- Shutdown: No joule heat to the melter.

4.3.3.1 Melter/System Functional Test

Incomplete – Reserved for later

4.3.3.1.1 Safety Instrumented Functions (SIF) Testing Intervals

Confirmation of the Probability of Failure on Demand (PFD) calculations (referenced below) remain true when the operational requirements of full functional testing of the Safety Instrumented Functions (SIF) are met on the intervals defined below:

SIF Case (Safety Interlocks)	Full Functional Testing Interval [In YEARS – unless otherwise noted]	Ref.
LAW Melter 1/2 Plenum High Pressure (each)	no more than 6 months	24590-LAW-U3C-PPJ-00001
LAW Melter 1/2 Annulus High Pressure (each)	3	24590-LAW-U3C-PPJ-00001
LAW Melter 1/2 Primary Film Cooler Low Flow (each)	0.5	24590-LAW-U3C-PPJ-00018
LAW Melter 1/2 Standby Film Cooler Low Flow (each)	0.5	24590-LAW-U3C-PPJ-00018
LAW Melter 1/2 Lid Cooling Water High Temperature (each)	3	24590-LAW-U3C-PPJ-00021
LAW Melter 1/2 Lid Cooling Water Low Flow (each)	3	24590-LAW-U3C-PPJ-00021

4.3.4.2 Radiological Work Permit (RWP) Surveys – Aministrative Controls

The following administrative control is related to work activities to support removal/replacement of LAW melter components. Due to the potential for high beta activity resulting from LAW glass deposition on removable melter components, the components should be surveyed for beta activity for compliance with the applicable RWP action levels for decontamination, handling, packaging and disposal. Based on the results of this survey, the approporiate actions will be taken consistent with the RWP process. [Section 8.5, 24590-LAW-Z0C-W13T-00007]

5 References and Design Documents List

5.1 Source / Basis References

Document Number	Rev	Title	Text Reference
24590-LAW-DSA-NS-18-0001~~24590-WTP-PSAR-ESH-01-002-03~~	0A~~06C~~	*Documented Safety Analysis for the Low-Activity Waste Facility~~Preliminary Documented Safety Analysis to Support~~*	LAW-~~PDSA~~DSA

Document Number	Rev	Title	Text Reference
		~~*Construction Authorization; LAW Facility Specific Information*~~	

5.2 Other References

Document Number	Rev	Title
24590-LAW-M2C-LMP-00002	~~00B~~0	*LMP-MLTR-00001, and LMP-MLTR-00002, LAW Melter Units, Structural and Seismic Analysis with ANSYS*
24590-LAW-M2C-LMP-00016	0	*LAW Melter Shield Lid Crush Pad Sizing*
24590-LAW-M6C-LMP-00018	00B	*Analytical Limits for LAW Melter 1 & 2 Plenum High Pressure Safety Interlocks*
24590-LAW-U3C-PPJ-00001	00A	*PFD Calculation for LAW Melter Plenum and Annulus High Pressure Interlocks*
24590-LAW-U3C-PPJ-00018	00C	*PFD Calculation for LAW Primary and Standby Film Cooler Low Flow Interlocks*
24590-LAW-U3C-PPJ-00021	00C	*PFD Calculation for LAW Melters Lid Cooling Water High Temperature and Low Flow Interlocks*
24590-LAW-Z0C-W13T-00007	0	*Dose Rate Calculation for the Replaceable Items Removed from the LAW Melter*
24590-WTP-DB-PET-~~09~~17-001	~~1~~0	*Process Inputs Basis of Design (PIBOD) for LAW and EMF*
~~24590-WTP-PSAR-ESH-01-002-01~~	~~06B~~	~~*Preliminary Documented Safety Analysis to Support Construction Authorization; General Information*~~

Appendix A Test Objectives, Conditions, and Acceptance Criteria

Requirement (para #)	Plan (including SSCs)	Acceptance Criteria (TAC or GTC)**	Notes/Comments	Test Conditions
~~3.6.2.4~~	~~Perform leak-rate testing to measure the flow rate into the melter shell during normal operations~~	~~**(TAC)**~~ ~~The air leak rate into the melter is at least 117 scfm~~	~~It was estimated that the minimum dilution air flowrate should be 117 scfm at 500 °C, see page 16 of 24590-LAW-M4C-LOP-00002, *LFL Air Dilution for Flammable Constituents in the LAW Off-Gas System (Excluding Suppressants)*, so minimum in-leak flow rate needed is 117 scfm~~ ~~All the melter equipment specified on Table 4 of 24590-QL-HC4-W000-00094-05-00003 is installed during the testing.~~	~~Cold Commissioning~~ ~~All equipment installed.~~ ~~The in-leak flow rate determined by taking measurements on C5V annulus, LOP, and LVP systems as needed. Measurements may include pressure, flow, and temperature. Measurements are taken using either installed instruments or portable instruments. Calculations performed on the readings to determine the net in-leak into the plenum~~
3.8.2.6	Test to verify that LMP-RO-00001 and -00002 limits the makeup flow to no greater than 50 gpm. **CTNs:** LMP-RO-00001 LMP-RO-00002	**(TAC)** Makeup flow is limited to 50gpm or less.		PCW is operational.

Requirement (para #)	Plan (including SSCs)	Acceptance Criteria (TAC or GTC)**	Notes/Comments	Test Conditions
3.14.2.1.1.1	INTEGRATED TEST Perform a test to verify that the following functions are performed for the affected melter upon detection of high pressure (reduced vacuum) (**≥ -0.1 in. W.G.**~~**set point TBD**~~) in the melter plenum relative to the annulus: • Close ADS air supply valves (LFP) • Close ADS water supply valves (LFP) • Close film cooler water supply valves (LOP) • Close WESP air valves (LOP) • Close film cooler air supply valves (LOP) • Open standby film cooler isolation valves (LOP) • Open primary film cooler emergency air inbleed valves (LOP) - no sooner than 120 seconds after trip • Open standby film cooler emergency air inbleed valves (LOP) - no sooner than 120 seconds after trip • Open WESP outlet valves (LOP) ~~1. Stop air to the ADS pumps for the affected melter feed pump~~ ~~2. Stop ADS flush water to the affected melter feed pump~~ ~~3. Stop air and water flow to the associated primary and standby film coolers for the affected melter~~ ~~4. Open the associated primary and standby film cooler emergency air in bleeds for the affected melter (LOP).~~ ~~5. Open the associated bypass valve from the standby film cooler to the SBS for the affected melter (LOP).~~ ~~6. Stop air flow to the associated WESP (LOP).~~ ~~7. Initiate an evacuation alarm in areas where airborne concentrations of hazardous material can exceed FW exposure limits prior to personnel evacuation time (PPJ).~~ Pressure Transmitters– (CTNs): • LMP-PDT- 1528/1529 for Melter 1 • LMP-PDT- 2528/2529 for Melter 2	**(TAC)** Upon detection of a high pressure in a melter plenum pressure relative to the annulus (**≥ -0.1 in. W.G.**)~~(set point TBD)~~, the following operations are automatically performed for the affected melter ~~(per Table C4-4, PDSA Addendum)~~: 1. Close • LFP-YV-1208/1212 for Melter 1 • LFP-YV-2208/2212 for Melter 2 2. Close • LFP- YV -1207/1211 for Melter 1 • LFP- YV -2207/2211 for Melter 2 3. Close • LOP- YV-1129/1404 for Melter 1 (air) • LOP- YV-2129/2404 for Melter 2 (air) • LOP- YV-1109/1405 for Melter 1 (water) • LOP- YV-2109/2405 for Melter 2 (water) 4. Open • LOP-YV- 1401/1407, Melter 1-Primary • LOP-YV- 1402/1406, Melter 1-Standby • LOP-YV- 2401/2407, Melter 2-Primary • LOP-YV- 2402/2406, Melter 2-Standby 5. Open • LOP-YV-1008 for Melter 1 • LOP-YV-2008 for Melter 2 6. Close • LOP-YV-1098/1161 for Melter 1 • LOP-YV-2098/2161 for Melter 2 7. Open • LOP-FV-1140 for Melter 1 • LOP-FV-2140 for Melter 2 ~~Alarm(s) sound(s)~~	Tests closing/opening of valves on high pressure signal from • LMP-PDT- 1528/1529 for Melter 1 • LMP-PDT- 2528/2529 for Melter 2. This test is to be performed separately for each melter and each safety pressure transmitter listed in the plan.	The PPJ, LMP, LFP, and LOP systems are required to be operational to perform this test

Requirement (para #)	Plan (including SSCs)	Acceptance Criteria (TAC or GTC)**	Notes/Comments	Test Conditions
3.14.2.1.1.2	Perform a test to verify that the following functions are performed upon detection of high pressure (reduced vacuum) (**≥ -0.1 in. W.G.**) in the melter plenum relative to the annulus: • Initiate audible evacuation alarms in LM0130, LM0130A, LM0130D, and LC0106-4 (LMP) Pressure Transmitters– (CTNs): • LMP-PDT- 1528/1529 for Melter 1 • LMP-PDT- 2528/2529 for Melter 2	(TAC) Upon detection of a high pressure in a melter plenum pressure relative to the annulus (**≥ -0.1 in. W.G.**), the alarm sounds	Tests area alarm on high pressure signal from • LMP-PDT- 1528/1529 for Melter 1 • LMP-PDT- 2528/2529 for Melter 2. This test is to be performed separately for each melter and each safety pressure transmitter listed in the plan.	The PPJ systems is required to be operational to perform this test
3.14.2.1.3	Perform a test to verify that airflow to the ADS pumps is stopped for the affected melter upon detection of Lid Cooling Cavity high temperature by temperature transmitters (**≥ 121.7°F**~~set point TBD~~) Temperature Transmitters– (CTNs): ▪ LMP-TT-~~1637~~ 1654 or LMP-TT-~~1638~~ 1655 for Melter 1 ▪ LMP-TT-~~2637~~ 2654 or LMP-TT-~~2638~~ 2655 for Melter 2	**(TAC)** Upon the detection of Lid Cooling Cavity high temperature pressure (**≥ 121.7°F**~~set point TBD~~), the valves listed below automatically close. • LFP-YV-1208/1212 for Melter 1 • LFP-YV-2208/2212 for Melter 2		The PPJ, LMP, and LFP systems are operational.
~~3.14.2.1.3~~	~~Perform a test to verify that airflow to the ADS pumps is stopped for the affected melter upon detection of low cooling water flow by flow transmitters (set point TBD)~~ ~~Flow Transmitters– (CTNs):~~ ~~• LMP-FT-1652 or LMP-FT-1653 for Melter 1 [LAW-PDSA Addendum, Table C4-4]~~ ~~• LMP-FT-2652 or LMP-FT-2653 for Melter 2 [LAW-PDSA Addendum, Table C4-4]~~	~~(TAC)~~ ~~Upon detection of low flow of cooling water pressure (set point TBD), the valves listed below automatically close.~~ ~~• LFP-YV-1208/1212 for Melter 1~~ ~~• LFP-YV-2208/2212 for Melter 2~~		~~The PPJ, LMP, and LFP systems are operational.~~
3.14.2.1.4	Perform a test to verify that airflow to the ADS pumps is stopped on both melters upon detection of high annulus pressure relative to C3V (melter gallery) (**≥ -1.2 in. W.C.**).~~(set point TBD)~~ Pressure Transmitters– (CTNs): ▪ LMP-PDT-1596 and LMP-PDT-1597 for Melter 1~~[LAW-PDSA Addendum, Table C4-4]~~ ▪ LMP-PDT-2596 and LMP-PDT-2597 for Melter 2~~[LAW-PDSA Addendum, Table C4-4]~~	**(TAC)** Upon the detection of high annulus pressure relative to C3V (melter gallery) (**≥ -1.2 in. W.C.**)~~(set point TBD)~~, the valves listed below automatically close. • LFP-YV-1208/1212 for Melter 1 • LFP-YV-2208/2212 for Melter 2		The PPJ, LMP, and LFP systems are operational
3.14.2.1.5	Perform a test to verify that airflow to the ADS pumps is stopped for the affected melter upon detection of melter lid cooling loop flow less than 15 gpm. CTNs • LMP-FT-1652/-1653 for Melter 1 • LMP-FT-2652/-2653 for Melter 2	(TAC) Upon detection of a melter lid cooling loop low flow (**≤ 15 gpm**), the following operations are automatically performed: 1. Close ADS air supply • LFP-YV-1208/-1212 for Melter 1 • LFP-YV-2208/-2212 for Melter 1	Tests closing of valves on low flow signal from This test is to be performed separately for each melter and each safety pressure transmitter listed in the plan.	The PPJ, LMP, and LFP systems are required to be operational to perform this test

Requirement (para #)	Plan (including SSCs)	Acceptance Criteria (TAC or GTC)**	Notes/Comments	Test Conditions
3.15.2.2	Perform a test to confirm that the correct flow range (**≤ 22.8 gpm**~~TBD~~) can be achieved through a range of system conditions ~~Test PRVs~~Needle Valves (flow control) – (CTNs) LMP-V-32058 through LMP-V-32069 for Melter 1 LMP-V-32070 through LMP-V-32081 for Melter 2	**(TAC)** Adjust flow range for each valve and confirm that this flow range can be maintained	The flow through the needle valves are tested under conditions that simulate a breach of the cooling jacket. Potential flow into the melter is a result of flow from the supply and return side for the postulated failure of a cooling jacket (i.e. single failure). ~~Cooling water lines are accessed at an appropriate point such as the hose disconnects on the west side of the melter. The relatively unrestricted line flow from the cooling loop is measured. Through a combination of these measurements and/or calculations the flow through all of the remaining feed nozzle cooling loops is determined and compared against the allowable flow~~	

Notes:

* This test/demonstration is planned for completion by Startup.

** Test acceptance criteria (TAC) are based on requirements from authorization basis documents. General test criteria (GTC) are requirements from other sources.

Any nonsafety related anomalies or issues experienced during the execution of a test or demonstration plan to validate a requirement can be put on [**HOLD**] until the issue has been resolved.

Appendix C ~~Active Safety Instruments and Functions~~Deleted

~~The listed instruments are designated as having active safety functions, implemented through interface with and programming in the PPJ system. Information in the table below reflects the current design of active safety instruments, including functions and safety designations per the P&IDs and associated equipment and instrument lists. In some cases, the current safety classification of the SSCs in design is known to exceed the design requirements. The information will be updated as needed to reflect changes to the design. The information below is provided in support of Plant Engineering and Operations and does not represent design requirements.~~

~~Function Title~~	~~Safety Designation~~	~~Sensors~~	~~Final Control Elements~~	~~Functional Description~~
~~Melter 1 Plenum Pressure - ADS Pump Air Isolation~~	~~SS~~	~~LMP -PDT-1528~~ ~~LMP -PDT-1529~~	~~LFP -YV-1208~~ ~~LFP-YV-1212~~	~~Upon detection of the plenum pressure being high, the function closes a valve supplying air to the affected melter ADS feed pump~~
~~Melter 2 Plenum Pressure - ADS Pump Air Isolation~~	~~SS~~	~~LMP -PDT-2528~~ ~~LMP -PDT-2529~~	~~LFP -YV-2208~~ ~~LFP-YV-2212~~	~~Upon detection of the plenum pressure being high, the function closes a valve supplying air to the affected melter ADS feed pump~~
~~Melter 1 Plenum Pressure - ADS Pump Water Isolation~~	~~SS~~	~~LMP -PDT-1528~~ ~~LMP -PDT-1529~~	~~LFP -YV-1207~~ ~~LFP- YV-1211~~	~~Upon detection of the plenum pressure being high, the function closes a valve supplying DIW to the affected melter ADS feed pump~~
~~Melter 2 Plenum Pressure - ADS Pump Water Isolation~~	~~SS~~	~~LMP -PDT-2528~~ ~~LMP -PDT-2529~~	~~LFP -YV -2207~~ ~~LFP- YV -2211~~	~~Upon detection of the plenum pressure being high, the function closes a valve supplying DIW to the affected melter ADS feed pump~~
~~Melter 1 Plenum Pressure - Film Cooler Air Supply Isolation~~	~~SS~~	~~LMP -PDT-1528~~ ~~LMP -PDT-1529~~	~~LOP -YV-1129~~ ~~LOP- YV-1404~~	~~Upon detection of the plenum pressure being high, the function closes a valve supplying air to the film cooler.~~
~~Melter 2 Plenum Pressure - Film Cooler Air Supply Isolation~~	~~SS~~	~~LMP -PDT-2528~~ ~~LMP -PDT-2529~~	~~LOP -YV-2129~~ ~~LOP- YV-2404~~	~~Upon detection of the plenum pressure being high, the function closes a valve supplying air to the film cooler.~~
~~Melter 1 Plenum Pressure - Film Cooler Water Supply Isolation~~	~~SS~~	~~LMP -PDT-1528~~ ~~LMP -PDT-1529~~	~~LOP -YV-1109~~ ~~LOP- YV-1405~~	~~Upon detection of the plenum pressure being high, the function closes a primary and standby valves supplying water to the affected melter film cooler.~~
~~Melter 2 Plenum Pressure - Film Cooler Water Supply Isolation~~	~~SS~~	~~LMP -PDT-2528~~ ~~LMP -PDT-2529~~	~~LOP -YV-2109~~ ~~LOP- YV-2405~~	~~Upon detection of the plenum pressure being high, the function closes a primary and standby valve supplying water to the affected melter film cooler.~~

~~Function Title~~	~~Safety Designation~~	~~Sensors~~	~~Final Control Elements~~	~~Functional Description~~
~~Melter 1 Plenum Pressure - Standby Offgas Line~~	~~SS~~	~~LMP -PDT-1528~~ ~~LMP -PDT-1529~~	~~LOP -YV-1008~~	~~Upon detection of the plenum pressure being high, the function opens the associated bypass valve from the standby film cooler to the SBS for the affected melter (LOP).~~
~~Melter 2 Plenum Pressure - Standby Offgas Line~~	~~SS~~	~~LMP -PDT-2528~~ ~~LMP -PDT-2529~~	~~LOP -YV-2008~~	~~Upon detection of the plenum pressure being high, the function opens the associated bypass valve from the standby film cooler to the SBS for the affected melter (LOP).~~
~~Melter 1 Plenum Pressure - WESP Air Isolation~~	~~SS~~	~~LMP -PDT-1528~~ ~~LMP -PDT-1529~~	~~LOP -YV-1098~~ ~~LOP-YV-1161~~	~~Upon detection of the plenum pressure being high, the function closes the valve supplying air to the associated WESP.~~
~~Melter 2 Plenum Pressure - WESP Air Isolation~~	~~SS~~	~~LMP -PDT-2528~~ ~~LMP -PDT-2529~~	~~LOP -YV-2098~~ ~~LOP-YV-2161~~	~~Upon detection of the plenum pressure being high, the function closes the valve supplying air to the associated WESP.~~
~~Melter 1 Lid Cooling Cavity High Temperature Interlock~~	~~SS~~	~~LMP -TT-1637~~ ~~LMP -TT-1638~~	~~LFP-YV-1208~~ ~~LFP-YV-1212~~	~~Upon the detection of Lid Cooling Cavity high temperature by temperature sensors of Lid Cooling Cavity High Temperature Interlock the function closes a valve supplying air to the affected melter ADS feed pump~~
~~Melter 2 Lid Cooling Cavity High Temperature Interlock~~	~~SS~~	~~LMP -TT-2637~~ ~~LMP -TT-2638~~	~~LFP-YV-2208~~ ~~LFP-YV-2212~~	~~Upon the detection of Lid Cooling Cavity high temperature by temperature sensors of Lid Cooling Cavity High Temperature Interlock the function closes a valve supplying air to the affected melter ADS feed pump.~~
~~Melter 1 Lid Cooling Cavity High Temperature Interlock~~	~~SS~~	~~LMP-FT -1652~~ ~~LMP-FT -1653~~	~~LFP-YV -1208~~ ~~LFP-YV -1212~~	~~Upon detection of low flow of cooling water temperature by flow sensors of Lid Cooling Cavity High Temperature Interlock the function closes a valve supplying air to the affected melter ADS feed pump~~
~~Melter 2 Lid Cooling Cavity High Temperature Interlock~~	~~SS~~	~~LMP-FT -2652~~ ~~LMP-FT -2653~~	~~LFP-YV -2208~~ ~~LFP-YV -2212~~	~~Upon detection of low flow of cooling water temperature by flow sensors of Lid Cooling Cavity High Temperature Interlock the function closes a valve supplying air to the affected melter ADS feed pump~~
~~Melter 1 High Annulus Pressure Interlock~~	~~SS~~	~~LMP-PDT -1596~~ ~~LMP-PDT -1597~~	~~LFP-YV -1208~~ ~~LFP-YV -1212~~	~~Upon the detection of high annulus pressure, the function closes a valve supplying air to the affected melter ADS feed pump~~

~~Function Title~~	~~Safety Designation~~	~~Sensors~~	~~Final Control Elements~~	~~Functional Description~~
~~Melter 2 High Annulus Pressure Interlok~~	~~SS~~	~~LMP-PDT-2596~~ ~~LMP-PDT-2597~~	~~LFP-YV-2208~~ ~~LFP-YV-2212~~	~~Upon the detection of high annulus pressure, the function closes a valve supplying air to the affected melter ADS feed pump~~

Appendix F Programmatic (Non-Design) System Requirements

Table F-1 Level 1 and 2 Programmatic (Non-Design) System Requirements

Item #	Section 3 Rqmt Paragraph ref. (or NA)	Rqmt Source	Requirement	Document in which implemented (TBD until doc developed
Nuclear Safety (e.g., TSRs; SACs)				
4	N/A	N/A~~[Section 5.5.20, LAW-PDSA]~~	N/A~~The melter lid cooling cavity pressure relief controls consist of operability requirements for each melter lid cooling circuit with the following elements: • At least one PRV shall be operable for the cooling circuit. The PRV(s) shall have a relief setpoint such that the melter lid cooling cavity pressure remains below its design pressure.~~	N/A~~TBD~~
5	N/A~~3.8.2.1~~	N/A~~[Section 5.5.20, LAW-PDSA]~~	N/A~~Surveillances related to this LCO include periodic functional testing of the relief valve(s), including verification that the PRV setting is within established limits.~~	N/A~~TBD~~
6	N/A	N/A~~[Section 5.5.20, LAW-PDSA]~~	N/A~~The relief valves on each cooling water circuit must be operable whenever any LAW melter cooled by that cooling water circuit is in operation mode. When no melters in the associated circuit are in operation mode, there are no cold caps, and no melter offgas release of NOx above exposure standards is possible.~~	N/A~~TBD~~
7	N/A~~3.9.4.4~~	N/A~~[Attachment 1C, Table C4-2, LAW-PDSA]~~	N/A~~**Table C4-2 LAW Specific Administrative Controls and Safety Management Programs:** Facility Process SACs – SS **Specific Administrative Controls and Safety Management Programs:** Critical Lift Limits **Type:** Preventive Administrative Credited Safety Function: Reduces the probability of a release of radioactive and chemically hazardous material, caused by an impact, by ensuring lift planning and appropriate equipment selection. **Credited Functional Requirement:** Limits must be placed on the height of items being lifted over the melter, C5V melter annulus piping and offgas piping. **SSSD and (or) PDSA Basis**: Melter Offgas Releases (NO_X) SSSD~~	N/A

Table F-1 Level 1 and 2 Programmatic (Non-Design) System Requirements

Item #	Section 3 Rqmt Paragraph ref. (or NA)	Rqmt Source	Requirement	Document in which implemented (TBD until doc developed
8	N/A~~3.9.4.4~~	N/A~~[Attachment 1C, Table C4-2, LAW PDSA]~~	N/A~~**Table C4-2 LAW Specific Administrative Controls and Safety Management Programs: Facility Process SACs – SS**~~ ~~**Specific Administrative Controls and Safety Management Programs**: Critical Lift Limits~~ ~~**Type:** Preventive Administrative~~ ~~**Credited Safety Function:** Reduces the probability of a release of radioactive and chemically hazardous material, caused by an impact, by ensuring lift planning and appropriate equipment selection.~~ ~~**Credited Functional Requirement:** Limits must be placed on the mass of items being lifted over the melter, C5V melter annulus piping and offgas piping.~~ ~~**SSSD and (or) PDSA Basis:** Melter Offgas Releases (NO_x) SSSD~~	N/A
9	N/A~~3.9.4.4~~	N/A~~[Attachment 1C, Table C4-2, LAW PDSA]~~	N/A~~**Table C4-2 LAW Specific Administrative Controls and Safety Management Programs: Facility Process SACs – SS**~~ ~~**Specific Administrative Controls and Safety Management Programs**: Critical Lift Limits~~ ~~**Type:** Preventive Administrative~~ ~~**Credited Safety Function:** Reduces the probability of a release of radioactive and chemically hazardous material, caused by an impact, by ensuring lift planning and appropriate equipment selection.~~ ~~**Credited Functional Requirement:** The travel path of items being lifts must be pre-planned when being lifted over the melter, C5V melter annulus piping and offgas piping.~~ ~~**SSSD and (or) PDSA Basis:** Melter Offgas Releases (NO_x) SSSD~~	N/A
10	N/A~~3.9.4.4~~	N/A~~[Attachment 1C, Table C4-2, LAW PDSA]~~	N/A~~**Table C4-2 LAW Specific Administrative Controls and Safety Management Programs: Facility Process SACs – SS**~~ ~~**Specific Administrative Controls and Safety Management Programs:** Critical Lift Limits~~ ~~**Type:** Preventive Administrative~~ ~~**Credited Safety Function:** Reduces the probability of a release of radioactive and chemically hazardous material, caused by an~~	N/A

Table F-1 Level 1 and 2 Programmatic (Non-Design) System Requirements

Item #	Section 3 Rqmt Paragraph ref. (or NA)	Rqmt Source	Requirement	Document in which implemented (TBD until doc developed
			~~impact, by ensuring lift planning and appropriate equipment selection.~~ ~~**Credited Functional Requirement:** Verification and inspection of rigging and lifting equipment (e.g., slings, hooks, and cranes) must be performed before a lift.~~ ~~**SSSD and (or) PDSA Basis:** Melter Offgas Releases (NO_x) SSSD~~	
11	N/A~~3.9.4.4~~	N/A~~[Attachment 1C, Table C4-2, LAW-PDSA~~	N/A~~**Table C4-2 LAW Specific Administrative Controls and Safety Management Programs: Facility Process SACs – SS**~~ ~~**Specific Administrative Controls and Safety Management Programs**: Critical Lift Limits~~ ~~**Type:** Preventive Administrative~~ ~~**Credited Safety Function:** Reduces the probability of a release of radioactive and chemically hazardous material, caused by an impact, by ensuring lift planning and appropriate equipment selection.~~ ~~**Credited Functional Requirement:** Limits must be placed on the location of lifts over or near the melter, C5V melter annulus piping and offgas piping.~~ ~~**SSSD and (or) PDSA Basis:** Melter Offgas Releases (NO_x) SSSD~~	N/A

Attachment 6
18-ECD-0078
(136 Pages Excluding Cover Sheet)

24590-LAW-3ZN-LOP-00006, *Incorporation of DSA Requirements, Work Off Items (Punchlist, ATS, CRs), and Open EIEs into the LAW LOP SDD 24590-LAW-3ZD-LOP-00001*

System Design Description Change Notice

CHANGE DOCUMENT NO. 24590-LAW-3ZN-LOP-00006

JOB NO.	TITLE FOR CHANGE NOTICE
24590	Incorporation of DSA requirements, work off items (Punchlist, ATS, CRs), and open EIEs, into the LAW LOP SDD 24590-LAW-3ZD-LOP-00001

DOCUMENT NUMBER	REV	DOCUMENT NUMBER	REV
24590-LAW-3ZD-LOP-00001	01		

PART OF DESIGN CHANGE PACKAGE (DCP)? ☐ Yes ☒ No

Justification for no DCP: Impacted SSC has not been turned over to the Plant Management organization.

INCORPORATES AN EIE? ☒ Yes ☐ No If yes, list EIEs:

24590-LAW-EIE-M-17-0044 Rev. 0
24590-LAW-EIE-PE-17-0006 Rev. 0
24590-LAW-EIE-J-17-0008 Rev. 0
24590-LAW-EIE-J-17-0016 Rev. 0
24590-LAW-EIE-J-17-0018 Rev. 0
24590-LAW-EIE-J-17-0019 Rev. 0
24590-LAW-EIE-J-17-0026 Rev. 0
24590-LAW-EIE-J-17-0028 Rev. 0
24590-LAW-EIE-J-17-0030 Rev. 0
24590-LAW-EIE-J-17-0031 Rev. 0
24590-LAW-EIE-MS-17-0012 Rev. 0
24590-LAW-EIE-J-18-0001 Rev. 0
24590-LAW-EIE-J-18-0005 Rev. 0
24590-LAW-EIE-J-18-0006 Rev. 0
24590-LAW-EIE-J-18-0014 Rev. 0
24590-LAW-EIE-M-17-0037 Rev. 0
24590-LAW-EIE-MS-17-0040 Rev. 0
24590-LAW-EIE-MS-18-0028 Rev. 0
24590-LAW-EIE-M-17-0004 Rev. 0
24590-WTP-EIE-SYSE-16-0085 Rev. 0

JUSTIFICATION FOR CHANGE

Work off items were necessary for LAW construction complete and were issued as part of SDDCN 24590-LAW-3ZN-LOP-00005. SDDCN 24590-LAW-3ZN-LOP-00005 is superseded by this SDDCN and those are included here. The LAW DSA (24590-LAW-DSA-NS-18-0001) issuance supersedes the LAW PDSA (24590-WTP-PSAR-ESH-01-002-03). Requirements from the PDSA that are in the LAW LOP SDD (24590-LAW-3ZD-LOP-00001) are being removed, revised, or replace with requirements from the LAW DSA.

Supersedes Change Document ☒ Yes ☐ No Document # 24590-LAW-3ZN-LOP-00004
24590-LAW-3ZN-LOP-00005

REQUIREMENTS REVIEW

Client Approval Required	☐ Yes	☒ No	Interface Resolution Required *	☐ Yes	☒ No

Address any "yes" answers in the description

DESCRIPTION OF CHANGE

EIE(s):

The following EIEs have *no impact* to the SDD.

24590-LAW-EIE-M-17-0044 Rev. 0 – The EIE states that "*24590-LAW-M6C-LVP-00015 is…Issued to align with 24590-WTP-PSAR-ESH-01-002-03, Rev. 6D*" As 24590-WTP-PSAR-ESH-01-002-03 is the LAW PDSA and the scope of this SDDCN is to replace, revise, or remove references to the PDSA and update based on the DSA, the damping time, maximum speeds, stroke times, modulating rates, and response times defined in the Offgas FATE calculation should be added to the SDD when the calculation is updated to be aligned with the DSA.

24590-LAW-EIE-PE-17-0006 Rev. 0 – WESP purge air heater heat duty is not described in Section 4 of the SDD.

24590-LAW-EIE-M-17-0004 Rev. 0 – was issued against Revision 0 but not incorporated into Revision 1. The EIE states that the "P&IDs are updated per the new PDSA." The scope of this SDDCN is to replace, revise, or remove references to the PDSA and update based on the DSA, any impact to the SDD the P&IDs might have should be added to the SDD after the P&IDs are updated to be aligned with the DSA.

The following EIEs have *been incorporated* into the SDD.

24590-LAW-EIE-J-17-0008 Rev. 0 – Safety instrument function components testing frequency during plant operation were added in new section 4.3.1.

24590-LAW-EIE-J-17-0016 Rev. 0 – Safety instrument function components testing frequency during plant operation were added in new section 4.3.1.

24590-LAW-EIE-J-17-0018 Rev. 0 – WESP High Level interlock setpoint has been updated in requirement 3.9.2.2.2.
24590-LAW-EIE-J-17-0019 Rev. 0 – SBS High & Low Level interlocks' setpoint has been updated in requirements 3.9.2.2.3 and 3.9.2.2.4.
24590-LAW-EIE-J-17-0026 Rev. 0 – Safety instrument function components testing frequency during plant operation were added in new section 4.3.1.
24590-LAW-EIE-J-17-0028 Rev. 0 – Film Cooler Low Flow interlock setpoint has been updated in requirement 3.9.2.2.1.
24590-LAW-EIE-J-17-0030 Rev. 0 – Safety instrument function components testing frequency during plant operation were added in new section 4.3.1.
24590-LAW-EIE-J-17-0031 Rev. 0 – HEPA Preheater High Outlet Temperature interlock setpoint has been updated in requirement 3.9.2.3.1.
24590-LAW-EIE-MS-17-0012 Rev. 0 – Operational constraints in 24590-LAW-M6C-LVP-00019 are captured in new Section 4.2.3.9.1.
24590-LAW-EIE-J-18-0001 Rev. 0 – Carbon Bed High CO Concentration interlock setpoint has been updated in requirement 3.9.2.4.3.
24590-LAW-EIE-J-18-0005 Rev. 0 – SCO/SCR Heater & Skid Temperature, Ammonia Flow, and Air flow interlocks' setpoints have been updated in requirements 3.9.2.5.2, 3.9.2.5.3, 3.9.2.5.5, and 3.9.2.5.6, respectively.
24590-LAW-EIE-J-18-0006 Rev. 0 – Offgas Header High and Low Pressure interlocks' setpoints have been updated in requirement 3.9.2.7.1.
24590-LAW-EIE-J-18-0014 Rev. 0 – Analyzer Room High temperature interlock setpoint has been updated in requirement 3.9.2.11.
24590-LAW-EIE-M-17-0037 Rev. 0 – LVP HEPA preheaters power ratings have been incorporated into Section 4.1.1.2.1,
24590-LAW-EIE-MS-17-0040 Rev. 0 – Caustic Scrubber Low Recirculation, Low Water Supply, Process Water Supply Low Pressure Interlocks' setpoints have been updated in requirement 3.9.2.6.2, 3.9.2.6.3, and 3.9.2.6.6, respectively.
24590-LAW-EIE-MS-18-0028 Rev. 0 – Correct adsorber inlet and outlet valves in Sections 4.1.1.2. 3, 4.1 .6.2.3.2, 4.1.6.2.3.3, and 4.1.6.2.3.5.
24590-WTP-EIE-SYSE-16-0085 Rev. 0 – Environmental qualification requirements for SCCs that operate in harsh environments were updated in requirement 3.4.1.4

The following changes are added (underlined) or deleted (~~strikethrough~~) and are provided in the attachment.

Section 1.5.1 added new acronyms

Section 2.1 Table 2-1 revised per requirement changes

Section 2.3 Table 2-2 (24590-LAW-3ZN-LOP-00005) was revised per the SYDR comments in ATS-MGT-17-0322 to add a space between "*to RLD-VSL-00005*"

Section 2.3 Table 2-3 (24590-LAW-3ZN-LOP-00005) was revised per Ecology EDR comments (24590-LAW-EDR-SYSE-18-0001) relating to differing information between note 15 on LAW P&ID – 24590-LAW-M6-LVP-00001002 and the SDD to remove LVP-HTR-00001B/00003B from LVE system.

Requirement 3.4.1.4 (24590-LAW-3ZN-LOP-00005, 24590-WTP-EIE-SYSE-16-0085) was revised per the SYDR comments in ATS-MGT-17-0322 to delete the "*] [*" after "*Datasheet*", placed a comma in its place and correct "*identifies*" and was revised to update the requirement per 24590-WTP-SRDCN-ENG-16-00022.

Requirement 3.4.1.5 (24590-LAW-3ZN-LOP-00005) was revised per the SYDR comments in ATS-MGT-17-0322 to delete the sentence "*The selection of equipment and materials is further addressed in detail as the design progresses.*" in the Basis Discussion.

Requirement 3.4.1.6 (24590-LAW-3ZN-LOP-00005) was revised per the SYDR comments in ATS-MGT-17-0322 to delete "*and containment*" in the Basis Discussion.

Requirement 3.4.2.4 thru 3.4.2.14 (24590-LAW-3ZN-LOP-00005) was revised per the SYDR comments in ATS-MGT-17-0322 to change the first sentence to "*The LAW melters are thermal treatment units permitted as Miscellaneous Units under Washington Administrative Code 173-303-680*", combined the 3rd & 4th sentences to read "*Melter limiting feed rates are in tables in the Dangerous Waste Permit, but the tables are indicated as RESERVED with no information in them.*", and deleted the second paragraph completely in the Basis Discussion.

Requirement 3.4.2.5 (24590-LAW-3ZN-LOP-00005) was revised per the SYDR comments in ATS-MGT-17-0322 to read, "*...ensure particulate matter < 10 micrometers (PM10) emissions...*". Also, deleted the reference *[Appendix Ch04, Section 4.3.4, DWP]* as this section of Chapter 4 of the DWP does not provide information related to this requirement.

Requirement 3.4.2.8 (24590-LAW-3ZN-LOP-00005) was revised per the SYDR comments in ATS-MGT-17-0322 to add clarity from the DWP that the dioxin and furan TEQ emissions limits are based on individual constituents.

Requirement 3.4.2.10 (24590-LAW-3ZN-LOP-00005) was revised per the SYDR comments in ATS-MGT-17-0322 to add clarity from the DWP that the lead and cadmium emissions limits are based on the combined constituents.

Requirement 3.4.2.13 (24590-LAW-3ZN-LOP-00005) was revised per the SYDR comments in ATS-MGT-17-0322 to change the last sentence for clarity, "*…and have the capability to demonstrate compliance to this performance during demonstration testing required by the Dangerous Waste Permit.*"

Requirement 3.4.2.14 (24590-LAW-3ZN-LOP-00005) was revised per the SYDR comments in ATS-MGT-17-0322 to add a period after PODCs and the rest of the sentence was deleted as it was not part of the base requirements. And revised the Test Verification method, to delete "*are within limits*" and replaced with "*can meet 99.99% Destruction and Removal Efficiency (DRE).*"

Requirement 3.4.2.15 & 3.4.2.17 were deleted, as the LAW DSA did not retain these requirements from the LAW PDSA as written.

Requirement 3.4.2.19 was revised to align with the description and safety functions in the LAW DSA.

Requirement 3.4.2.20 was revised to align with the description and seismic classification in the LAW DSA.

Requirement 3.4.2.21, 3.4.2.22, & 3.4.2.23 were deleted, as the LAW DSA did not retain these requirements from the LAW PDSA as written.

Requirement 3.4.2.24 was revised to align with the functional requirement and performance criterion in the LAW DSA.

Requirement 3.4.2.25 was deleted, as the LAW DSA did not retain this requirement from the LAW PDSA as written.

Requirement 3.4.2.26 was revised to align with the functional requirement and performance criterion in the LAW DSA.

Requirement 3.4.2.27 was deleted and relocated to Requirement 3.7.2.6 to align with the functional requirement and performance criterion in the LAW DSA.

Requirement 3.4.2.29.1 & 3.4.2.29.2 were added based on new functional requirements and performance criteria in the LAW DSA.

Requirement 3.4.4.1 (24590-LAW-3ZN-LOP-00004) was deleted in SDDCN-LOP-00004 with the justification that it was addressed in the LAW FDD. However, only ORD section 9.1 ID#1184 is captured in the LAW FDD (Requirement 3.8.5.13), leaving the BOD section 11.3.2.3 ID#11398 not captured. Therefore, this requirement is retained, the ORD reference was deleted and the basis discussion and verification plan were revised to relate the requirement to the size of the components and their maneuverability though the routes provided to the maintenance areas.

Requirement 3.4.4.14 (24590-LAW-3ZN-LOP-00004) was deleted per SDDCN.

Requirement 3.4.4.19 (24590-LAW-3ZN-LOP-00005) was revised per C&I comment resolutions to the SYDR comments to change the requirement verification method from “R’-review, to “I”-inspect by ENG/OPS as no engineering documentation can be used to verify.

Requirement 3.4.4.21 (24590-LAW-3ZN-LOP-00005) was revised per C&I comment resolutions to the SYDR comments to properly flow down requirement language “*Whenever possible…*” from 11.16 OPS ID#1373 and removed the “A”-analysis as it is not a necessary verification method.

Requirement 3.5.2.3 & 3.5.2.4 were revised to align with the functional requirement and performance criterion in the LAW DSA.

Requirement 3.5.2.5 was deleted, as the LAW DSA did not retain this requirement from the LAW PDSA as written.

Requirement 3.5.2.6 was revised to align with the functional requirement and performance criterion in the LAW DSA.

Requirement 3.5.2.7.1, 3.5.2.7.2, 3.5.2.7.3, 3.5.2.7.4, & 3.6.2.4 were added based on new functional requirements and performance criteria in the LAW DSA.

Requirement 3.7.2.2 & 3.7.2.5 were revised to align with the functional requirements and performance criteria in the LAW DSA.

Requirement 3.7.2.6 was added based on new functional requirement and performance criterion in the LAW DSA.

Requirement 3.8.2.1 was revised to align with the functional requirement and performance criterion in the LAW DSA.

Requirement 3.8.2.3 & 3.8.2.5 were deleted, as the LAW DSA did not retain these requirements from the LAW PDSA as written.

Requirement 3.8.2.6 was deleted and combined with Requirement 3.4.2.20 to align with the description and seismic classification in the LAW DSA.

Requirement 3.8.2.7 was revised to align with the functional requirement and performance criterion in the LAW DSA.

Requirement 3.8.2.8 was added based on new functional requirement and performance criterion in the LAW DSA.

Requirement 3.9.2.1.3 was revised to align with the description and seismic classification in the LAW DSA and the SRD requirements identified in Requirement 3.4.2.20.

Requirement 3.9.2.2.1 was revised to align with the functional requirement and performance criterion in the LAW DSA and (24590-LAW-3ZN-LOP-00004) its Basis Discussion was revised based on Requirement 3.4.2.20 in the SDDCN.

Requirement 3.9.2.2.1.1 was added based on new functional requirement and performance criterion in the LAW DSA.

Requirement 3.9.2.2.2 was revised to align with the functional requirement and performance criterion in the LAW DSA.

Requirement 3.9.2.2.2.1 was added based on new functional requirement and performance criterion in the LAW DSA.

Requirement 3.9.2.2.3 (now Requirement 3.9.2.2.3.1) was renumbered and revised to align with the functional requirement and performance criterion in the LAW DSA.

Requirement 3.9.2.2.3.2 & 3.9.2.2.3.3 were added based on new functional requirements and performance criteria in the LAW DSA.

Requirement 3.9.2.2.4 (now Requirement 3.9.2.2.4.1) was renumbered and revised to align with the functional requirement and performance criterion in the LAW DSA.

Requirement 3.9.2.2.4.2 was added based on new functional requirement and performance criterion in the LAW DSA.

Requirement 3.9.2.3.1 (now Requirement 3.9.2.3.1.1) was renumbered and revised to align with the functional requirement and performance criterion in the LAW DSA.

Requirement 3.9.2.3.1.2 & 3.9.2.3.1.3 were added based on new functional requirements and performance criteria in the LAW DSA.

Requirement 3.9.2.4.3 was revised to align with the functional requirement and performance criterion in the LAW DSA.

Requirement 3.9.2.4.3.1 was added based on new functional requirement and performance criterion in the LAW DSA.

Requirement 3.9.2.5.2 was revised to align with the functional requirement and performance criterion in the LAW DSA.

Requirement 3.9.2.5.2.1 was added based on new functional requirement and performance criterion in the LAW DSA.

Requirement 3.9.2.5.3 (now Requirement 3.9.2.5.3.1) was renumbered and revised to align with the functional requirement and performance criterion in the LAW DSA.

Requirement 3.9.2.5.3.2 & 3.9.2.5.3.3 were added based on new functional requirements and performance criteria in the LAW DSA.

Requirement 3.9.2.5.5 was revised to align with the functional requirement and performance criterion in the LAW DSA.

Requirement 3.9.2.5.5.1 was added based on new functional requirement and performance criterion in the LAW DSA.

Requirement 3.9.2.5.6 was revised to align with the functional requirement and performance criterion in the LAW DSA.

Requirement 3.9.2.5.6.1 was added based on new functional requirement and performance criterion in the LAW DSA.

Requirement 3.9.2.6.2 was revised to align with the functional requirement and performance criterion in the LAW DSA.

Requirement 3.9.2.6.2.1 was added based on new functional requirement and performance criterion in the LAW DSA.

Requirement 3.9.2.6.3 was revised to align with the functional requirement and performance criterion in the LAW DSA.

Requirement 3.9.2.6.3.1 was added based on new functional requirement and performance criterion in the LAW DSA.

Requirement 3.9.2.6.6 was revised to align with the functional requirement and performance criterion in the LAW DSA.

Requirement 3.9.2.6.6.1 was added based on new functional requirement and performance criterion in the LAW DSA.

Requirement 3.9.2.7.1 (now Requirement 3.9.2.7.1.1) was renumbered and revised to align with the functional requirement and performance criterion in the LAW DSA.

Requirement 3.9.2.7.1.2, 3.9.2.7.1.3, 3.9.2.7.1.4, 3.9.2.7.1.5, & 3.9.2.7.1.6 were added based on new functional requirements and performance criteria in the LAW DSA.

Requirement 3.9.2.8.1 (now Requirement 3.9.2.8.1.1) was renumbered and revised to align with the functional requirement and performance criterion in the LAW DSA.

Requirement 3.9.2.8.1.2 & 3.9.2.8.1.3 were added based on new functional requirements and performance criteria in the LAW DSA.

Requirement 3.9.2.8.4 was revised to align with the functional requirement and performance criterion in the LAW DSA.

Requirement 3.9.2.8.4.1 was added based on new functional requirement and performance criterion in the LAW DSA.

Requirement 3.9.2.9.1 was revised to align with the functional requirement and performance criterion in the LAW DSA.

Requirement 3.9.2.9.1.1 was added based on new functional requirement and performance criterion in the LAW DSA.

Requirement 3.9.2.10.1 (now Requirement 3.9.2.10.1.1) was renumbered and revised to align with the functional requirement and performance criterion in the LAW DSA.

Requirement 3.9.2.10.1.2, 3.9.2.10.1.3, 3.9.2.10.1.4, 3.9.2.10.1.5, & 3.9.2.10.1.6 were added based on new functional requirements and performance criteria in the LAW DSA.

Requirement 3.9.2.11 was deleted as the Analyzer Room High Temperature interlock has no LOP or LVP components. The interlock description from the DSA is being located in the LAW HVAC SDD.

Requirement 3.9.2.12 (24590-LAW-3ZN-LOP-00005) was revised per ATS-MGT-18-0013 to remove the test per remarks from the Startup test matrix *24590-LAW-RPT-ENG-18-018, Rev. A*

Requirement 3.9.2.15.1 & 3.9.2.15.2 were added based on new functional requirements and performance criteria in the LAW DSA.

Requirement 3.10.2.1 was revised to align with the functional requirement and performance criterion in the LAW DSA.

Requirement 3.10.2.2, 3.10.2.3, 3.10.2.4, & 3.10.2.5 were added based on new functional requirements and performance criteria in the LAW DSA.

Requirement 3.10.4.14 (24590-LAW-3ZN-LOP-00005) was revised to remove the valve closure time test as it is covered by Startup generic testing and subsequent direction to remove the Analysis verification and revise the Review verification.

Section 3.12.1, Table 3-37 (renumbered per 24590-LAW-3ZN-LOP-00007) was revised to update the footnote with LAW Facility DSA

Section 4.1.1 (24590-LAW-3ZN-LOP-00005) was revised per Ecology EDR comments (24590-LAW-EDR-SYSE-18-0001) relating to differing information between note 15 on LAW P&ID – 24590-LAW-M6-LVP-00001002 and the SDD to add a note to clarify that LVP-HTR-00001B/00003B are components in system abandoned in place.

Section 4.1.1.1.3 (24590-LAW-3ZN-LOP-00005) was revised per the SYDR comments in ATS-MGT-17-0322 to correct the CTN in the last paragraph from SCV (LOP-VSL-00001/0000) to SCV (LOP-VSL-00001/0002).

Section 4.1.1.1.4 (24590-LAW-3ZN-LOP-00005) was revised per the SYDR comments in ATS-MGT-17-0322 to correct the floor elevation from 2" 3" to 2' 3" in Figure 4-5.

Section 4.1.1.2.1 (24590-LAW-3ZN-LOP-00005) was revised per Ecology comments regarding relating to differing information between note 15 on LAW P&ID – 24590-LAW-M6-LVP-00001002 and the SDD to clarify the LVP safety heaters LVP-HTR-00001B/00003B are being abandoned in place to maintain the confinement boundary, but are no longer safety and have any functionality to them.

Section 4.1.1.2.1 Figure 4-8 (24590-LAW-3ZN-LOP-00005) was revised per Ecology EDR comments (24590-LAW-EDR-SYSE-18-0001) relating to differing information between note 15 on LAW P&ID – 24590-LAW-M6-LVP-00001002 and the SDD to add a note associating heaters LVP-HTR-00001B/00003B are abandoned in place

Section 4.1.1.2.3 – Revised the adsorber inlet valves configuration per 24590-LAW-EIE-MS-18-0028.

Section 4.1.1.2.4 (24590-LAW-3ZN-LOP-00005) was revised per the SYDR comments in ATS-MGT-17-0322 to correct the room number from L-0304 °F to room L-0304F.

Section 4.1.1.2.4.2 (24590-LAW-3ZN-LOP-00005) was revised per the SYDR comments in ATS-MGT-17-0322 to correct [14 ft. by 9 in. long] to [14 ft. 9 in. long].

Section 4.1.6.1.1.3 (24590-LAW-3ZN-LOP-00005) was revised per CR 24590-WTP-GCA-MGT-18-00024 to correct PSV CTNs

Section 4.1.6.2.2 (24590-LAW-3ZN-LOP-00005) was revised per Ecology EDR comments (24590-LAW-EDR-SYSE-18-0001) relating to differing information between note 15 on LAW P&ID – 24590-LAW-M6-LVP-00001002 and the SDD to delete reference to LVP-HTR-00001B/00003B.

Section 4.1.6.2.3.2 was revised to update the adsorber inlet and outlet valves CTNs per 24590-LAW-EIE-MS-18-0028.

Section 4.1.6.2.3.3 was revised to update the adsorber inlet and outlet valves CTNs and configuration per 24590-LAW-EIE-MS-18-0028.

Section 4.1.6.2.3.4 was updated with LAW DSA.

Section 4.1.6.2.3.5 was revised to update the adsorber inlet valves CTNs per 24590-LAW-EIE-MS-18-0028.

Section 4.1.6.2.4.4 was updated with LAW DSA.

Section 4.1.6.2.5.4 was updated with LAW DSA.

Section 4.1.6.2.6.5 was revised to remove '(setpoint TBD)' as it has been updated in the Requirement and Testing Acceptance Criteria.

Section 4.2.3.9.1 (24590-LAW-EIE-MS-17-0012) was added to capture the locked valve positions for various LMP/AMR valves to meet the operational constraints listed in 24590-LAW-M6C-LVP-00019.

Section 4.2.5 (24590-LAW-3ZN-LOP-00005) was revised per ATS-MGT-14-0276 to include shutdown criteria discussed in the TCO O&M manual 24590-CD-POC-MBT0-00007-05-00004 (page 200) on how to prevent condensation during long periods of shutdown, such as for hands-on maintenance.

Section 4.3.1 (24590-LAW-EIE-J-17-0008, 24590-LAW-EIE-J-17-0016, 24590-LAW-EIE-J-17-0026, & 24590-LAW-EIE-J-17-0030) was added to capture safety instrument function components testing frequency dictated by multiple Probability of Failure on Demand (PFD) calculations.

Section 5.1 was updated with the LAW DSA.

Section 5.2 was updated with new and corrected references.

Appendix A, Requirements 3.4.2.4 – 3.4.2.14 (24590-LAW-3ZN-LOP-00005) were revised per ATS-MGT-18-0013 to update Test Acceptance criteria from **(TAC)** to **(GTC)** per the recommendation of the Startup test matrix *24590-LAW-RPT-ENG-18-018, Rev. A*. **(TAC)** is only for tests where the requirement is safety related or WAI.

Appendix A, Requirements 3.4.2.4 (CR 24590-WTP-GCA-MGT-18-00367 Action 01) was revised to correct the NOx emission limit to 200.1 pounds per day to align to WTP PSD-02-01 Amendment 3.

Appendix A, Requirements 3.8.2.3 & 3.8.2.5 were deleted, as the LAW DSA did not retain these requirements from the LAW PDSA as written.

Appendix A, Requirement 3.9.2.2.1, 3.9.2.2.2, 3.9.2.4.3, 3.9.2.5.2, 3.9.2.5.5, 3.9.2.5.6, 3.9.2.6.2, 3.9.2.6.3, 3.9.2.6.6, and 3.9.2.8.4 were revised based on functional requirements, CTNs, and performance criteria in the LAW DSA.

Appendix A, Requirement 3.9.2.2.3.1, 3.9.2.2.4.1, 3.9.2.3.1.1, 3.9.2.5.3.1, 3.9.2.7.1.1, and 3.9.2.8.1.1 were renumbered per the requirement and revised based on functional requirements, CTNs, and performance criteria in the LAW DSA.

Appendix A, Requirement 3.4.2.26, 3.5.2.6, 3.8.2.1, 3.8.2.7, 3.8.2.8, 3.9.2.2.1.1, 3.9.2.2.2.1, 3.9.2.2.3.2, 3.9.2.2.3.3, 3.9.2.2.4.2, 3.9.2.3.1.2, 3.9.2.3.1.3, 3.9.2.4.3.1, 3.9.2.5.2.1, 3.9.2.5.3.2, 3.9.2.5.3.3, 3.9.2.5.5.1, 3.9.2.5.6.1, 3.9.2.6.2.1, 3.9.2.6.3.1, 3.9.2.6.6.1, 3.9.2.7.1.2, 3.9.2.7.1.3, 3.9.2.7.1.4, 3.9.2.7.1.5, 3.9.2.7.1.6, 3.9.2.8.1.2, 3.9.2.8.1.3, 3.9.2.8.4.1, 3.9.2.9.1, 3.9.2.9.1.1, 3.9.2.10.1.1, 3.9.2.10.1.2, 3.9.2.10.1.3, 3.9.2.10.1.4, 3.9.2.10.1.5, 3.9.2.10.1.6, 3.9.2.15.1, 3.9.2.15.2, 3.10.2.4, and 3.10.2.5 were added based on new functional requirements, CTNs, and performance criteria in the LAW DSA.

Attachment A, Requirement 3.9.2.11 was deleted as the requirement was deleted and relocated to LAW HVAC SDD.

Attachment A, Requirement 3.9.2.12 (24590-LAW-3ZN-LOP-00005) was deleted per ATS-MGT-18-0013 per remarks from the Startup test matrix *24590-LAW-RPT-ENG-18-018, Rev. A*

Attachment A, Requirement 3.10.4.14 was deleted as valve closure time tests are covered by Startup generic testing.

Appendix C, *Active Safety Instrumentations and Functions* was deleted as the content is captured in the requirements from the LAW DSA.

Appendix F, Table 5-1 (now Table F-1) was renumbered and the *Nuclear Safety* section was revised to remove LAW PDSA items.

ORIGINATOR	CHECKER
ORG/Discipline - Wayne Sexton/Systems Claude Kabera/Systems	Jeff Walkley

Validation:	See attached	See attached		
	Organization/Area of Responsibility	*Print/Type Name*	*Signature*	*Date*
Concurrence:	N/A	N/A		
	Title	*Print/Type Name*	*Signature*	*Date*
Concurrence:	Manager of Engineering and Design Authority	Ian Milgate		6/20/18
	Title	*Print/Type Name*	*Signature*	*Date*
Approval:	Systems Engineering Manager	Sarah Barker		6/20/18
	Title	*Print/Type Name*	*Signature*	*Date*

Validation

Appl.	Requirement Area	Requirement Developer	Signature	Date
☐	Architectural Design			
☐	Civil/Structural Design			
☐	Controls & Instrumentation Design			
☑	Electrical Design & AHJ	Scott Goad	Scott Goad	6/14/18
☐	Fire Protection Engineering			
☐	HVAC Design			
☐	Mechanical Handling Design			
☑	Mechanical Systems Design	Sarah Barker	SBarker	6.20.18
☐	Plant Design			
☐	Process Engineering			
☐	Interface (External)			
☐	Interface (Internal)			
☐	System Functions and Requirements			
☐	Equipment Environmental Qualification			
☐	Materials Engineering / Technology			
☐	Plant Software Design			
☑	Environmental Permitting (ES&H)	Roger Landon via email (signed by W. Sexton)		6/14/18
☑	Nuclear Safety Engineering	Kraig Wendt see statement below		
☐	Criticality Safety			
☐	Radiological Engineering			
☐	Industrial Safety/Hygiene (ES&H)			
☐	Mission (WTP Contract Functional/ Performance Requirements)			
☐	Operations Requirements Document (Plant Operations)			
☐	Quality Assurance			
☐	Safeguards & Security			
☐	Startup			
☐	Transportation & Logistics			

*** Validation not required for alpha/preliminary design description documents.**

NSE has no further comments – all previous NSE comments provided are resolved; the LAW DSA requirements are correct. The subject SDD does not need SE documentation as the SDD is a precursor/ preliminary document to the actual design change. N/A- 10 item 2 and N/A-08. K. Wendt

Reviewed
No Comments
By: Kraig Wendt - kmwendt
Org Name: BNI
Placed: Jun 19, 2018

1 Introduction

1.5.1 Acronyms

DSA Documented Safety Analysis
PFD Probability of Failure on Demand
SIF Safety Instrumented Functions
SIS Safety Instrumented System

2 General Overview

2.1 System and Safety Functions

Table 2-1 Functional Analysis and Crosswalk Requirements

Reference	Functional Analysis Description	Requirement Section No.
A.1	Ventilate (Draw) Melter Offgas – The LOP system draws gases from the melters, maintains a negative pressure in the melter plenums, equipment, and piping relative to adjacent areas, and it confines hazardous gases.	3.4.1.1, ~~3.4.2.15,~~ 3.4.2.16, ~~3.4.2.21, 3.4.2.22, 3.4.2.23,~~ 3.4.2.24, 3.4.2.26, 3.5.2.4, ~~3.8.2.5~~
A.5.1	Receive Safety Power – HEPA filter preheater safety elements receive safety UPE power to maintain confinement and prevent moisture condensation and subsequent blinding of the HEPA filters during a loss of power event.	~~3.9.2.10~~N/A
A.8	Exhaust – The LOP and LVP systems maintain all components at a lower pressure relative to the room or gallery in which they reside. One set of fans and air injection provide the motive force for the elevated release of offgas through the exhaust stack.	3.4.1.7, 3.10.2.1, 3.4.2.26, 3.8.2.1, ~~3.8.2.3~~
A.8.1	Receive Safety Power – Offgas exhauster fans receive safety UPE power to maintain offgas at a negative pressure for confinement during a loss of site power.	~~3.9.2.10~~N/A

Table 2-1 Functional Analysis and Crosswalk Requirements

Reference	Functional Analysis Description	Requirement Section No.
D.2	Programmable Protection System (PPJ) – Safety instrumented functions and alarms.	
	• Film Cooler Outlet High Temperature Interlock	3.9.2.2.1
	• WESP High Liquid Level Interlock	3.9.2.2.2
	• SBS High Level Interlock	3.9.2.2.3.1&.2.3.2
	• SBS Low Level Interlock	3.9.2.2.4.1&.2.4.2
	• HEPA Preheaters Outlet High Temperature Interlocks	3.9.2.3.1.1&.3.1.2
	• Melter Offgas System (High Differential CO) Interlock	3.9.2.4.3
	• Catalytic Oxidizer/Reducer Skid Heater Interlock	3.9.2.5.2
	• Thermal catalytic oxidizer (TCO) Skid Outlet High Temperature Interlock	3.9.2.5.3.1&.5.3.2
	• Ammonia High Flow Interlock	3.9.2.5.5
	• Ammonia Dilution Air Flow Interlock	3.9.2.5.6
	• Caustic Scrubber Low Recirculation Pressure Interlocks	3.9.2.6.2
	• Caustic Scrubber Loss of Cooling Interlocks	3.9.2.6.3
	• Caustic Scrubber Low Water Supply Pressure Interlock	3.9.2.6.6
	• LVP Header High/Low Pressure Interlock	3.9.2.7.1.1, .7.1.2, .7.1.3, .7.1.4, &.7.1.5
	• Offgas Exhauster 1A/1B/1C Shaft Seal Air Supply Low Pressure Interlock	
	• Exhauster 1A/1B/1C Shaft Seal Low Pressure Interlock	
	• LMP Melter Plenum High Pressure Interlock	3.9.2.8.1.1&.8.1.2
	• UPE Loss of Normal Power Interlock (Exhausters)	3.9.2.8.4
	~~Analyzer Room High Temperature Interlock~~	3.9.2.9.1
		3.9.2.10.1.1, .10.1.2, .10.1.3, .10.1.4,&.10.1.5
		~~3.9.2.11~~

2.3 Basic Operational Overview

Table 2-2 LOP System Interfaces

System	Interface	Boundaries
RLD	SBS water purge pumps and SBS condensate purge pumps ~~pump~~ transfer condensate ~~toRLD-VSL-00005~~ to RLD-VSL-00005. Valve bulge LOP-BULGE-00001/00002 sumps drain by gravity to RLD sumps. WESPs drains go to RLD-VSL-00004. Process vessel vent low point drains by gravity to RLD-VSL-00004.	The SBS water purge and condensate purge lines transition from LOP to RLD designation at actuated plug valves inside valve bulges LOP-BULGE-00001/00002. Valve bulge drains transition from LOP to RLD designation at the RLD sump. WESP and vessel header drains are considered LOP piping in C1/C2 areas where the piping is double walled. Transition to RLD designation occurs inside C5 room L-B0001B, where pipe is single-walled.

Table 2-3 LVP System Interfaces

System	Interface	Boundaries
LVE	Catalytic oxidizer electric heater, ammonia dilution fans, caustic	LVP-EXHR-00001A/B/C

System	Interface	Boundaries
	scrubber recirculation pumps, caustic blowdown transfer pumps, and motor operated valves receive low voltage power.	LVP-FAN-00001/00002 LVP-HTR-00001A~~/B~~ LVP-HTR-00002 LVP-HTR-00003A~~/B~~ LVP-PMP-00002A/B LVP-PMP-00003A/B Reference: 24590-LAW-E8-LVE-00001, *LAW 480V Electrical Load List*

3 Design Requirements

3.4.1.4 Room Environment Conditions for Safety Structures, Systems, or Components

Requirement: The safety equipment in the LAW Facility LOP and LVP systems credited with any safety function(s) shall be designed and qualified to function as intended in the environments associated with the events for which they are intended to respond. Environmental qualification shall be to IEEE 323-83. The effects of aging on normal and abnormal functioning shall be considered in design and qualification using IEEE 323-83. For LBL Facilities only SS SSCs required to operate in harsh environments and credited for radiological and/or chemical hazards require qualification to IEEE 323-83. ~~and post-accident monitoring instruments shall be designed and qualified to perform their safety function(s) as intended in the environment conditions associated with the events for which they are intended to respond, inclusive of aging effects, throughout their qualified life.~~ [Safety criteria 4.1-3, 4.4-1, 24590-WTP-SRD-ESH-01-001-02, *Safety Requirements Document Volume II* (SRD)][Section 11.7.3, BOD][Section 11.16, ORD]

Basis Discussion: The SSCs designated as SS are designed and qualified to perform their safety function(s). The effects of aging on normal and abnormal functioning are considered in design and qualification. Datasheet 24590-LAW-U0D-W16T-00001, *LAW Room Environment* *Datasheet*, identifies ~~*Datasheet*][Identifies~~ environmental conditions for rooms that house safety SSCs. ~~Report 24590-LAW-RPT-ENS-12-001, *LAW Post Accident Monitoring Report*, Identifies post-accident monitoring instrumentation.~~

Verification: Verification is expected to be achieved through the following:

Verif. Method	Verif. By	Plan	Notes/Comments
A/T	**ENG**	Perform analysis or testing to verify the ability of the SSCs credited with a safety function to withstand the environmental conditions for which they are intended to respond.~~Perform an analysis or testing to verify the ability of the SSCs credited with a safety function to withstand the specified environmental conditions.~~	~~Document in an equipment qualification package (EQP). Refer to 24590-LAW-U0D-W16T-00001 for room environmental conditions.~~
R	**ENG**	Review the design to verify that SS SSCs required to operate in harsh environments are environmentally qualified to IEEE 323-83 inclusive of the effects of aging on normal and abnormal functioning.	
R	**ENG**	Review the design to verify conformance to the as-tested or as-analyzed configuration.	~~Document in an evaluation/assessment or EQP.~~

3.4.1.5 Design (Operating) Life

Basis Discussion: Each melter has a minimum 5-year design life. Equipment for which premature failure or need for replacement could lead to shutdown of the melter system shall be designed for a minimum service life of 5 years to allow for replacement during melter outages. Equipment and material selection is based on proven performance, value engineering principles, and fit-for-function principles. ~~The selection of equipment and materials is further addressed in detail as the design progresses.~~ Equipment design needs to consider the routine environmental exposures under normal operations for non-safety equipment; safety and PAM equipment also considers abnormal and emergency exposures—this minimizes the need for equipment maintenance, exposure, and radiological waste generation in radiological areas. [ALARA]

3.4.1.6 Materials of Construction and Erosion/Corrosion Design Parameters

Basis Discussion: The allowance for erosion/corrosion and applicable materials of construction is limited to those components that contact the process fluids and is required to maintain confinement ~~and containment~~ of those process fluids. Materials of construction that can withstand the erosive/corrosive LAW effluents and chemicals are selected. The materials for the LAW Facility LOP and LVP system equipment and components are selected based on the stream data presented in the process corrosion datasheet report. If flushing or washing via internal spray mechanisms is needed to prevent or minimize corrosion, the operational limitations are identified in the corrosion evaluation. For the fluid characteristics of the process streams, refer to Appendix B, Tables B-25 to B-28; 24590-WTP-DB-PET-09-001, *Process Inputs Basis of Design (PIBOD)*; and 24590-WTP-RPT-PR-04-0001-04, *WTP Process Corrosion Data-Volume 4*.

The LOP and LVP system piping and vessel are accounted for in the erosion/corrosion analyses and are fabricated with materials of construction that can withstand the radioactive, thermal, and erosive/corrosive environment caused by the material.

3.4.2.4 Treatment of Nitrogen Oxide Emissions

Basis Discussion: The LAW melters are thermal treatment units permitted as Miscellaneous Units under Washington Administrative Code 173-303-680. ~~permitted as "miscellaneous units" to meet the maximum emission numbers as contained in the Code of Federal Regulations (CFR) requirements for incinerators.~~ The ~~arsenic,~~ nitrogen oxide discharge emission limit is in the air Permit and is what is achievable with T-BACT equipment in the system. Melter limiting feed rates are in tables in the Dangerous Waste Permit,~~Permit. However, the current Dangerous Waste Permit, does not have the feed rates values,~~ but the tables are indicated as RESERVED with no information in them. The demonstration testing and documentation (prepared by commissioning) will provide the basis and support the values for the Dangerous ~~Water~~ Waste Permit feed rates.

~~Other factors requiring consideration during equipment design are that some contaminants may be close to their risk-based analysis assessment and that the component emission limits could be driven by the assessment even though the air permit limits are lower than the DWP emission limits. The risk-based analysis assessment is a DWP requirement.~~

It is beneficial to refer to CCN No. 036692, *Emissions Report and Process Engineering Design Calculations*, for discussion of emission limits within the context of the DWP emission limits, the Air Permit emission limits, and the risk based assessment.

Verification: Verification is expected to be achieved through the following:

Verif. Method	Verif. By	Plan	Notes/Comments
A	**ENG**	Perform an analysis to verify the ability of the offgas system to ensure nitrogen oxide emissions are within limits.	May be documented in assessment/evaluation report.
T	**SU/ COM**	Test to verify the nitrogen oxide emissions are within limits.	In accordance with Ecology-approved test plan, 24590-LAW-PER-CTST-17-001.

3.4.2.5 Treatment Particulate Matter under 10 Microns (PM_{10}) Emissions

Requirement: The LOP and LVP systems' equipment shall be designed, with consideration of the limiting melter feed rates from the DWP tables, to ensure particulate matter ~~or PM_{10}~~< 10 micrometers (PM_{10}) emissions do not exceed 0.36 pounds per hour at 21% oxygen, when averaged over 24 consecutive hours, and have the capability to demonstrate compliance to this performance. [Approval Condition 5, PSD Air Permit] ~~[Appendix Ch04, Section 4.3.4, DWP]~~[Section C.7(d)(3)(iv), WTP Contract] (A.6)

Basis Discussion: PM_{10} is the measurement of particulates smaller than 10 microns. Initial testing is required to be performed within 60 days of achieving hot commissioning, but no later than 180 days from initial startup. Use of HEPA filtration in the design is expected to ensure exhaust conforms to emissions limits.

The LAW melters are thermal treatment units permitted as Miscellaneous Units under Washington Administrative Code 173-303-680. ~~permitted as "miscellaneous units" to meet the maximum emission numbers as contained in the Code of Federal Regulations, or CFR requirements for incinerators.~~ The PM_{10} discharge emission limit is in the Air Permit and is what is achievable with T-BACT equipment in the system. Melter limiting feed rates are in tables in the Dangerous Waste Permit, ~~Permit. However, the current Dangerous Waste Permit, does not have the feed rates values,~~ but the tables are indicated as RESERVED with no information in them. The demonstration testing and documentation (prepared by commissioning) will provide the basis and support the values for the Dangerous ~~Water~~ Waste Permit feed rates.

~~Other factors requiring consideration during equipment design are that some contaminants may be close to their risk-based analysis assessment and that the component emission limits could be driven by the assessment even though the air permit limits are lower than the DWP emission limits. The risk-based analysis assessment is a DWP requirement.~~

It is beneficial to refer to CCN No. 036692, *Emissions Report and Process Engineering Design Calculations*, for discussion of emission limits within the context of the DWP emission limits, the Air Permit emission limits, and the risk based assessment.

Verification: Verification is expected to be achieved through the following:

Verif. Method	Verif. By	Plan	Notes/Comments
A	**ENG**	Perform an analysis to verify the ability to sample the offgas for PM_{10} emissions per 40 CFR 60, *Standards of Performance for New Stationary Sources*, Appendix A, Methods 1 – 5.	May be documented in assessment/evaluation report.
T	**SU/ COM**	Test per 40 CFR 60, Appendix A, Methods 1 thru 5, including verification that PM_{10} emissions are within limits.	In accordance with Ecology-approved test plan, 24590-LAW-PER-CTST-17-001.

3.4.2.6 Particulate Matter Emissions

Basis Discussion: The LAW melters are thermal treatment units permitted as Miscellaneous Units under Washington Administrative Code 173-303-680. ~~permitted as "miscellaneous units" to meet the maximum emission numbers as contained in the Code of Federal Regulations, or CFR requirements for incinerators.~~ Particulate ~~particulate~~ matter discharge emission limit is in the Dangerous Waste Permit and is what is achievable with T-BACT equipment in the system. Melter limiting feed rates are in tables in the Dangerous Waste Permit, ~~Permit. However, the current Dangerous Waste Permit, does not have the feed rates values,~~ but the tables are indicated as RESERVED with no information in them. The demonstration testing and documentation (prepared by commissioning) will provide the basis and support the values for the Dangerous ~~Water~~ Waste Permit feed rates.

~~Other factors requiring consideration during equipment design are that some contaminants may be close to their risk-based analysis assessment and that the component emission limits could be driven by the assessment even though the air permit limits are lower than the DWP emission limits. The risk-based analysis assessment is a DWP requirement.~~

It is beneficial to refer to CCN No. 036692, *Emissions Report and Process Engineering Design Calculations*, for discussion of emission limits within the context of the DWP emission limits, the Air Permit emission limits, and the risk based assessment.

Verification: Verification is expected to be achieved through the following:

Verif. Method	Verif. By	Plan	Notes/Comments
A	**ENG**	Perform an analysis to verify the ability of the offgas system to ensure particulate emissions are within limits.	May be documented in assessment/evaluation report.
T	**SU/ COM**	Test to verify particulate emissions are within limits.	In accordance with Ecology-approved test plan, 24590-LAW-PER-CTST-17-001.

3.4.2.7 Hydrochloric Acid and Chlorine Gas Emissions

Basis Discussion: The LAW melters are thermal treatment units permitted as Miscellaneous Units under Washington Administrative Code 173-303-680. ~~permitted as "miscellaneous units" to meet the maximum emission numbers as contained in the Code of Federal Regulations, or CFR requirements for incinerators.~~ The hydrochloric acid and chlorine gas discharge emission limit is in the Dangerous Waste Permit and is what is achievable with T-BACT equipment in the system. Melter limiting feed rates are in tables in the Dangerous Waste Permit, ~~Permit. However, the current Dangerous Waste Permit, does not have the feed rates values,~~ but the tables are indicated as RESERVED with no information in them. The demonstration testing and documentation (prepared by commissioning) will provide the basis and support the values for the Dangerous ~~Water~~ Waste Permit feed rates.

~~Other factors requiring consideration during equipment design are that some contaminants may be close to their risk-based analysis assessment and that the component emission limits could be driven by the assessment even though the air permit limits are lower than the DWP emission limits. The risk-based analysis assessment is a DWP requirement.~~

It is beneficial to refer to CCN No. 036692, *Emissions Report and Process Engineering Design Calculations*, for discussion of emission limits within the context of the DWP emission limits, the Air Permit emission limits, and the risk based assessment.

Verification: Verification is expected to be achieved through the following:

Verif. Method	Verif. By	Plan	Notes/Comments
A	**ENG**	Perform an analysis to verify the ability of the offgas system to ensure hydrochloric acid and chlorine gas emissions are within limits.	May be documented in assessment/evaluation report.
T	**SU/ COM**	Test to verify hydrochloric acid and chlorine gas emissions are within limits.	In accordance with Ecology-approved test plan, 24590-LAW-PER-CTST-17-001.

3.4.2.8 Dioxin and Furan Toxicity Equivalence Emissions

Requirement: The LOP and LVP systems' equipment shall be designed, with consideration of the limiting melter feed rates from the DWP tables, to ensure dioxin and furan toxicity equivalence (TEQ) emissions do not exceed 0.2 ng/dscm, individually, and have the capability to demonstrate compliance to this performance. [Sections III.10.H.1.b.iv, III.10.I.1.b.iv, DWP][Section C.7(d)(3)(iv), WTP Contract] (A.7)

Basis Discussion: The LAW melters are thermal treatment units permitted as Miscellaneous Units under Washington Administrative Code 173-303-680. ~~permitted as "miscellaneous units" to meet the maximum emission numbers as contained in the Code of Federal Regulations, or CFR requirements for incinerators.~~ The dioxin and furan TEQ discharge emission limit is in the Dangerous Waste Permit and is what is achievable with T-BACT equipment in the system. Melter limiting feed rates are in tables in the Dangerous Waste Permit, ~~Permit. However, the current Dangerous Waste Permit, does not have the feed rates values,~~ but the tables are indicated as RESERVED with no information in them. The demonstration testing and documentation (prepared by commissioning) will provide the basis and support the values for the Dangerous ~~Water~~ Waste Permit feed rates.

~~Other factors requiring consideration during equipment design are that some contaminants may be close to their risk-based analysis assessment and that the component emission limits could be driven by the assessment even though the air permit limits are lower than the DWP emission limits. The risk-based analysis assessment is a DWP requirement.~~

It is beneficial to refer to CCN No. 036692, *Emissions Report and Process Engineering Design Calculations*, for discussion of emission limits within the context of the DWP emission limits, the Air Permit emission limits, and the risk based assessment.

Verification: Verification is expected to be achieved through the following:

Verif. Method	Verif. By	Plan	Notes/Comments
A	**ENG**	Perform an analysis to verify the ability of the offgas system to ensure dioxin and furan TEQ emissions are within limits.	May be documented in assessment/evaluation report.
T	**SU/ COM**	Test to verify dioxin and furan TEQ emissions are within limits.	In accordance with Ecology-approved test plan, 24590-LAW-PER-CTST-17-001.

3.4.2.9 Mercury Emissions

Basis Discussion: The LAW melters are thermal treatment units permitted as Miscellaneous Units under Washington Administrative Code 173-303-680. ~~permitted as "miscellaneous units" to meet the maximum emission numbers as contained in the Code of Federal Regulations, or CFR requirements for incinerators.~~ The mercury discharge emission limit is in the Dangerous Waste Permit and is what is achievable with T-BACT equipment in the system. Melter limiting feed rates are in tables in the Dangerous Waste Permit, ~~Permit.~~

~~However, the current Dangerous Waste Permit, does not have the feed rates values,~~ but the tables are indicated as RESERVED with no information in them. The demonstration testing and documentation (prepared by commissioning) will provide the basis and support the values for the Dangerous ~~Water~~ Waste Permit feed rates.

~~Other factors requiring consideration during equipment design are that some contaminants may be close to their risk-based analysis assessment and that the component emission limits could be driven by the assessment even though the air permit limits are lower than the DWP emission limits. The risk-based analysis assessment is a DWP requirement.~~

It is beneficial to refer to CCN No. 036692, *Emissions Report and Process Engineering Design Calculations*, for discussion of emission limits within the context of the DWP emission limits, the Air Permit emission limits, and the risk based assessment.

Verification: Verification is expected to be achieved through the following:

Verif. Method	Verif. By	Plan	Notes/Comments
A	**ENG**	Perform an analysis to verify the ability of the offgas system to ensure mercury emissions are within limits.	May be documented in assessment/evaluation report.
T	**SU/ COM**	Test to verify mercury emissions are within limits.	In accordance with Ecology-approved test plan, 24590-LAW-PER-CTST-17-001.

3.4.2.10 Lead and Cadmium Emissions

Requirement: The LOP and LVP systems' equipment shall be designed, with consideration of the limiting melter feed rates from the DWP tables, to ensure lead and cadmium emissions do not exceed 120 µg/dscm, combined, and have the capability to demonstrate compliance to this performance. [Sections III.10.H.1.b.vi, III.10.I.1.b.vi, DWP][Section C.7(d)(3)(iv), WTP Contract] (A.7)

Basis Discussion: The LAW melters are thermal treatment units permitted as Miscellaneous Units under Washington Administrative Code 173-303-680. ~~permitted as "miscellaneous units" to meet the maximum emission numbers as contained in the Code of Federal Regulations, or CFR requirements for incinerators.~~ The lead and cadmium discharge emission limit is in the Dangerous Waste Permit and is what is achievable with T-BACT equipment in the system. Melter limiting feed rates are in tables in the Dangerous Waste Permit, ~~Permit. However, the current Dangerous Waste Permit, does not have the feed rates values,~~ but the tables are indicated as RESERVED with no information in them. The demonstration testing and documentation (prepared by commissioning) will provide the basis and support the values for the Dangerous ~~Water~~ Waste Permit feed rates.

~~Other factors requiring consideration during equipment design are that some contaminants may be close to their risk-based analysis assessment and that the component emission limits could be driven by the assessment even though the air permit limits are lower than the DWP emission limits. The risk-based analysis assessment is a DWP requirement.~~

It is beneficial to refer to CCN No. 036692, *Emissions Report and Process Engineering Design Calculations*, for discussion of emission limits within the context of the DWP emission limits, the Air Permit emission limits, and the risk based assessment.

Verification: Verification is expected to be achieved through the following:

Verif. Method	Verif. By	Plan	Notes/Comments
A	**ENG**	Perform an analysis to verify the ability of the offgas system to ensure lead and cadmium emissions are within limits.	May be documented in assessment/evaluation report.
T	**SU/ COM**	Test to verify lead and cadmium emissions are within limits.	In accordance with Ecology-approved test plan, 24590-LAW-PER-CTST-17-001.

3.4.2.11 Arsenic, Beryllium, and Chromium Emissions

Basis Discussion: The LAW melters are thermal treatment units permitted as Miscellaneous Units under Washington Administrative Code 173-303-680. ~~permitted as "miscellaneous units" to meet the maximum emission numbers as contained in the Code of Federal Regulations, or CFR requirements for incinerators.~~ The arsenic, beryllium, and chromium discharge emission limit is in the Dangerous Waste Permit and is what is achievable with T-BACT equipment in the system. Melter limiting feed rates are in tables in the Dangerous Waste Permit, ~~Permit. However, the current Dangerous Waste Permit, does not have the feed rates values,~~ but the tables are indicated as RESERVED with no information in them. The demonstration testing and documentation (prepared by commissioning) will provide the basis and support the values for the Dangerous ~~Water~~ Waste Permit feed rates.

~~Other factors requiring consideration during equipment design are that some contaminants may be close to their risk-based analysis assessment and that the component emission limits could be driven by the assessment even though the air permit limits are lower than the DWP emission limits. The risk-based analysis assessment is a DWP requirement.~~

It is beneficial to refer to CCN No. 036692, *Emissions Report and Process Engineering Design Calculations*, for discussion of emission limits within the context of the DWP emission limits, the Air Permit emission limits, and the risk based assessment.

Verification: Verification is expected to be achieved through the following:

Verif. Method	Verif. By	Plan	Notes/Comments
A	**ENG**	Perform an analysis to verify the ability of the offgas system to ensure arsenic, beryllium, and chromium emissions are within limits.	May be documented in assessment/evaluation report.
T	**SU/ COM**	Test to verify arsenic, beryllium, and chromium emissions are within limits.	In accordance with Ecology-approved test plan, 24590-LAW-PER-CTST-17-001.

3.4.2.12 Carbon Monoxide Emission

Basis Discussion: The LAW melters are thermal treatment units permitted as Miscellaneous Units under Washington Administrative Code 173-303-680. ~~permitted as "miscellaneous units" to meet the maximum emission numbers as contained in the Code of Federal Regulations, or CFR requirements for incinerators.~~ The carbon monoxide discharge emission limit is in the Dangerous Waste Permit and is what is achievable with T-BACT equipment in the system. Melter limiting feed rates are in tables in the Dangerous Waste Permit, ~~Permit. However, the current Dangerous Waste Permit, does not have the feed rates values,~~ but the tables are indicated as RESERVED with no information in them. The demonstration testing and documentation (prepared by commissioning) will provide the basis and support the values for the Dangerous ~~Water~~ Waste Permit feed rates.

~~Other factors requiring consideration during equipment design are that some contaminants may be close to their risk-based analysis assessment and that the component emission limits could be driven by the assessment even though the air permit limits are lower than the DWP emission limits. The risk-based analysis assessment is a DWP requirement.~~

It is beneficial to refer to CCN No. 036692, *Emissions Report and Process Engineering Design Calculations*, for discussion of emission limits within the context of the DWP emission limits, the Air Permit emission limits, and the risk based assessment.

Verification: Verification is expected to be achieved through the following:

Verif. Method	Verif. By	Plan	Notes/Comments
A	**ENG**	Perform an analysis to verify the ability of the offgas system to ensure carbon monoxide emissions are within limits.	May be documented in assessment/evaluation report.
T	**SU/ COM**	Test to verify carbon monoxide emissions are within limits.	In accordance with Ecology-approved test plan, 24590-LAW-PER-CTST-17-001.

3.4.2.13 Hydrocarbon Emission

Requirement: The LOP and LVP systems' equipment shall be designed, with consideration of the limiting melter feed rates from the DWP tables, to ensure hydrocarbon emission do not exceed 10 ppm by volume, over an hourly rolling average, dry basis, and reported as propane, and have the capability to demonstrate compliance to this performance during demonstration testing required by the Dangerous Waste Permit. [Sections III.10.H.1.b.ix, III10.I.1.b.ix, DWP][Section C.7(d)(3)(iv), WTP Contract] (A.7)

Basis Discussion: The LAW melters are thermal treatment units permitted as Miscellaneous Units under Washington Administrative Code 173-303-680. ~~permitted as "miscellaneous units" to meet the maximum emission numbers as contained in the Code of Federal Regulations, or CFR requirements for incinerators.~~ The hydrocarbon discharge emission limit is in the Dangerous Waste Permit and is what is achievable with T-BACT equipment in the system. Melter limiting feed rates are in tables in the Dangerous Waste Permit, ~~Permit. However, the current Dangerous Waste Permit, does not have the feed rates values,~~ but the tables are indicated as RESERVED with no information in them. The demonstration testing and documentation (prepared by commissioning) will provide the basis and support the values for the Dangerous ~~Water~~ Waste Permit feed rates.

~~Other factors requiring consideration during equipment design are that some contaminants may be close to their risk-based analysis assessment and that the component emission limits could be driven by the assessment even though the air permit limits are lower than the DWP emission limits. The risk-based analysis assessment is a DWP requirement.~~

It is beneficial to refer to CCN No. 036692, *Emissions Report and Process Engineering Design Calculations*, for discussion of emission limits within the context of the DWP emission limits, the Air Permit emission limits, and the risk based assessment.

Verification: Verification is expected to be achieved through the following:

Verif. Method	Verif. By	Plan	Notes/Comments
A	**ENG**	Perform an analysis to verify the ability of the offgas system to ensure hydrocarbon emissions are within limits.	May be documented in assessment/evaluation report.
T	**SU/ COM**	Test to verify hydrocarbon emissions are within limits.	In accordance with Ecology-approved test plan, 24590-LAW-PER-CTST-17-001.

3.4.2.14 Organic Compound Destruction

Requirement: The LOP and LVP systems' equipment shall be designed, with consideration of the limiting melter feed rates from the DWP tables, to ensure a minimum destruction and removal efficiency (DRE) of 99.99% for the PODCs. ~~PODCs, and have the capability to demonstrate compliance to this performance. .~~ [Sections III.10.H.1.b.i, III.10.I.1.b.i, DWP][Section C.7(d)(3)(iv), WTP Contract] (A.7)

Basis Discussion: The LAW melters are thermal treatment units permitted as Miscellaneous Units under Washington Administrative Code 173-303-680. ~~permitted as "miscellaneous units" to meet the maximum emission numbers as contained in the Code of Federal Regulations, or CFR requirements for incinerators.~~ The PODCs limit is in the Dangerous Waste Permit and is what is achievable with T-BACT equipment in the system. Melter limiting feed rates are in tables in the Dangerous Waste Permit, ~~Permit. However, the current Dangerous Waste Permit, does not have the feed rates values,~~ but the tables are indicated as RESERVED with no information in them. The demonstration testing and documentation (prepared by commissioning) will provide the basis and support the values for the Dangerous ~~Water~~ Waste Permit feed rates.

~~Other factors requiring consideration during equipment design are that some contaminants may be close to their risk-based analysis assessment and that the component emission limits could be driven by the assessment even though the air permit limits are lower than the DWP emission limits. The risk-based analysis assessment is a DWP requirement.~~

It is beneficial to refer to CCN No. 036692, *Emissions Report and Process Engineering Design Calculations*, for discussion of emission limits within the context of the DWP emission limits, the Air Permit emission limits, and the risk based assessment.

Verification: Verification is expected to be achieved through the following:

Verif. Method	Verif. By	Plan	Notes/Comments
A	**ENG**	Perform an analysis to verify the ability of the offgas system to ensure PODCs emissions are within limits.	May be documented in assessment/evaluation report.
T	**SU/ COM**	Test to verify PODCs can meet 99.99% Destruction and Removal Efficiency. ~~are within limits.~~	In accordance with Ecology-approved test plan, 24590-LAW-PER-CTST-17-001.

3.4.2.15 ~~Melter Offgas Confinement Boundary (Unobstructed Flow)~~Deleted

~~**Requirement:** The melter offgas confinement boundary design shall be capable of providing offgas confinement and an unobstructed flow path from the melter shell to the melter offgas system stack exit under design-basis temperatures and pressures. [Appendix C Table C4-1, LAW PDSA] (A.1)~~

~~**Basis Discussion:** The confinement boundary mitigates the release of radioactive and chemically hazardous material by providing a primary release pathway from the melter through the melter offgas system exhausters and~~

~~to the stack exit. The melter shell (gas barrier) forms the outer confinement barrier for the melter plenum that is ventilated by the melter offgas system. [ALARA]~~

~~**Verification:** Verification is expected to be achieved through the following:~~

~~Verif. Method~~	~~Verif. By~~	~~Plan~~	~~Notes/Comments~~
~~R~~	~~ENG~~	~~Review design to verify the melter offgas system has the capability to provide offgas confinement and an unobstructed flow path from the melter shell to the offgas system stack.~~	

3.4.2.17 ~~Caustic Scrubber Drain Line Loop Seal~~Deleted

~~**Requirement:** The liquid filled loop seal on the drain line from the caustic scrubber to the caustic collection tank shall be designed to prevent in-leakage into the melter offgas system from the caustic collection tank drain line under bounding conditions from the downstream exhausters. The height of the loop seal shall account for evaporative losses, such that a sufficient liquid level (capable of preventing in-leakage) shall be maintained for a minimum of 2 hrs. following a loss of liquid flow to the caustic scrubber. [Appendix C Table C4-1, LAW PDSA]~~

~~**Basis Discussion:** The drain line from the caustic scrubber to the caustic collection tank contains a loop seal capable of preventing in-leakage into the melter offgas system from the caustic collection tank under bounding conditions from the downstream exhausters. Sufficient head is maintained in the loop seal via caustic scrubber recirculation line flow to ensure that even under the maximum expected exhauster vacuum in the melter offgas system (based on equipment locations and the presence of an open path from the melter plenum through the stack), the loop seal continues to prevent in-leakage into the melter offgas system through this pathway. The height of the loop seal ensures that even following a loss of flow that evaporative losses cannot allow for breakthrough of the line before melter feed can be terminated and the cold cap burnt off.~~

~~**Verification:** Verification is expected to be achieved through the following:~~

~~Verif. Method~~	~~Verif. By~~	~~Plan~~	~~Notes/Comments~~
~~A~~	~~ENG~~	~~Perform an analysis to verify the loop seal height to prevent in-leakage for a minimum of 2 hrs.~~	~~May be documented in assessment/evaluation report.~~
~~R~~	~~ENG~~	~~Review design to verify the presence of a loop seal in the drain line from the caustic scrubber to the caustic collection tank and meets the configuration requirements of the analysis.~~	

3.4.2.19 Safety Classifications

Requirement: The LOP and LVP systems' SSCs shall be classified as safety significant SSCs in accordance with Table 3-2: [Sections 4.4.3.1.1, 4.4.3.6.1, 4.4.3.8.1, 4.4.3.9.1, 4.4.3.11.1, 4.4.3.12.1, 4.4.3.13.1, 4.4.3.15.1, 4.4.3.16.1, 4.4.3.17.1, 4.4.3.18.1, 4.4.3.19.1, 4.4.4.1.1.1, 4.4.4.1.4.1, 4.4.4.1.5.1, 4.4.4.1.6.1, 4.4.4.1.7.1, 4.4.4.1.8.1, 4.4.4.1.9.1, 4.4.4.1.10.1, 4.4.4.1.11.1, 4.4.4.1.12.1, 4.4.4.1.13.1, 4.4.4.1.15.1, 4.4.4.1.16.1, 4.4.4.1.17.1, 4.4.4.1.18.1, 4.4.4.1.19.1, 4.4.4.1.20.1, 4.4.4.1.21.1, 4.4.4.1.22.1, Appendix A Table A-1, LAW-DSA]

Table 3-2 LOP and LVP Safety Functions

Equipment/Component Description	Credited Safety Function	Classifi-cation	Reference
Offgas Confinement to Elevated Release~~Melter Offgas Confinement Boundary~~ ~~Section 3.4.2.15~~ ~~Section 3.4.2.21~~ ~~Section 3.4.2.22~~ ~~Section 3.4.2.23~~ ~~Section 3.10.2.1~~ ~~Section 3.8.2.5~~ ~~Section 3.5.2.5~~ ~~Section 3.4.2.24~~ ~~Section 3.5.2.4~~	Primary Pathway – The offgas confinement boundary mitigates the consequences of a release of radioactive and chemically hazardous material by providing an elevated release. ~~The confinement boundary mitigates the release of radioactive and chemically hazardous material by providing a primary release pathway from the melter through the melter offgas system exhausters and to the stack exit. (Confinement Boundary – Primary Pathway)~~	**SS**	Section 4.4.3.1.1, Appendix A Table A-1, LAW-DSA~~Appendix C Table C4-1, LAW PDSA~~
	Secondary Pathway – The offgas confinement boundary mitigates the consequences of an offgas release to the melter gallery by providing a secondary release pathway to the process cell of the affected melter.~~The confinement boundary mitigates the release of chemically hazardous material by providing a primary exhaust pathway of melter offgas during a mercury mitigation skid fire and maintaining a confinement boundary in the mercury mitigation skid to limit the fire burn rate~~	**SS**	
	The offgas confinement boundary liquid-bearing vessels (LOP-SCB-00001/-00002, LOP-VSL-00001/-00002, LVP-SCB-00001) mitigate the consequences of a seismic event by providing passive confinement of liquids.~~(Confinement Boundary – Secondary Pathway)~~ ~~The confinement boundary mitigates the release of offgas to the melter gallery by providing a secondary release pathway to the unoccupied process cell.~~	**SS**	
Melter Special Relief Device ~~Section 3.5.2.6~~	The melter special relief device mitigates the release of offgas due to melter pressurization by relieving excess system pressure.~~The confinement boundary mitigates the release of offgas to the melter gallery by providing a secondary release pathway to the unoccupied process cell.~~	**SS**	Section 4.4.3.6.1, Appendix A Table A-1, LAW-DSA~~Appendix C Table C4-1, LAW PDSA~~
	~~The special relief device prevents the failure of the melter offgas confinement boundary by relieving excess system pressure in the event of over-pressurization of the melter plenum.~~	~~**SS**~~	~~Appendix C Table C4-1, LAW PDSA~~

Table 3-2 LOP and LVP Safety Functions

Equipment/Component Description	Credited Safety Function	Classifi-cation	Reference
Carbon Bed Adsorber Water Addition Flow Restriction Device ~~Section 3.7.2.2~~	The carbon bed water addition flow restriction device reduces the probability of a release of chemically hazardous material to all receptors by preventing a blockage of the mercury mitigation skid bypass line (LVP-PW-00015-S11N) due to carbon bed water addition.~~The carbon bed adsorber water addition flow restriction device reduces the probability of a release of chemically hazardous material by limiting the maximum water addition rate to the LAW carbon beds which could cause blockage of the offgas system.~~	**SS**	Section 4.4.3.12.1, Appendix A Table A-1, LAW-DSA ~~Appendix C Table C4-1, LAW PDSA~~
AMR/LVP Piping ~~Ammonia Reagent System [piping internal to facility and the ammonia dilution skid~~ ~~Section 3.7.2.5~~	Reduces the probability of a release of anhydrous ammonia by maintaining confinement Note: The boundary limits for this control begin at the upstream flange of the isolation valve (AMR-V-40886) on the ammonia pipeline exiting the ground at the southwest corner of the LAW Main Process building (24590-BOF-M6-AMR-00003001)~~Maintain primary confinement of anhydrous ammonia.~~	**SS**	Section 4.4.3.13.1, Appendix A Table A-1, LAW-DSA~~Appendix C Table C4-1, LAW PDSA~~
Offgas Exhausters ~~Melter Offgas Exhausters (LVP)~~ ~~Section 3.8.2.1~~ ~~Section 3.8.2.6~~ ~~Section 3.8.2.3~~	The offgas exhausters mitigate the consequences of a release of radioactive and chemically hazardous material by providing the motive force for an elevated release.~~The exhausters mitigate the consequences of a release of radioactive and chemically hazardous material by providing the motive force for an elevated release of melter offgas in the event normal offgas systems are bypassed, a fire in the carbon bed material releases additional hazardous material, or a failure causes excess hazardous material (ammonia, NO_x, SO_x) to be released.~~	**SS**	Section 4.4.3.17.1, Appendix A Table A-1, LAW-DSA~~Appendix C Table C4-1, LAW PDSA~~
Submerged Bed Scrubber (SBS) Vessel	The Submerged Bed Scrubber (SBS) Vessel reduces the probability of a release of radioactive and chemically hazardous material by protecting the offgas system from overheating	**SS**	Section 4.4.3.8.1, Appendix A Table A-1, LAW-DSA
SBS PSVs and Chilled Water Cooling Coils	SBS cooling coil and cooling jacket PSVs, and chilled water cooling coils reduce the probability of a release of radioactive and chemically hazardous material by protecting against an SBS cooling water leak impacting SBS vessel level	**SS**	Section 4.4.3.9.1, Appendix A Table A-1, LAW-DSA

Table 3-2 LOP and LVP Safety Functions

Equipment/Component Description	Credited Safety Function	Classifi-cation	Reference
~~SBS and SBS Condensate Vessel Cooling Line Pressure Relief~~ ~~Section 3.5.2.3~~	~~The pressure relief on the cooling lines associated with the SBS and SBS condensate vessels (internal chilled water cooling coil, and vessel cooling jackets) shall prevent failure of the cooling lines due to over pressurization when isolated. Without this safety function, flooding of the SBS and SBS condensate vessel can occur due to leakage into the vessel when the chilled water flow is re-established.~~	~~SS~~	~~Section 4.4.22.3, LAW PDSA~~
Valves (LOP-FV-1140 and LOP-FV-2140) Design (WESP modulating valves)	Reduces the probability of a release of radioactive and chemically hazardous material by providing a physical stop to ensure the valve cannot fail fully closed.	SS	Section 4.4.3.11.1, Appendix A Table A-1, LAW-DSA
Stack Drain Line Restriction Orifice (LVP-RO-00002)	Mitigates the consequences of a release of radioactive and chemically hazardous material by limiting offgas return flow from the stack condensate drain.	SS	Section 4.4.3.18.1, Appendix A Table A-1, LAW-DSA
Vessel Vent Restriction Orifice (LVP-RO-00001)	Mitigates the consequences of a release of radioactive and chemically hazardous material by limiting air ingress to the offgas system through the vessel vent header.	SS	Section 4.4.3.19.1, Appendix A Table A-1, LAW-DSA
Melter Plenum High Pressure Interlock (LMP) ~~Section 3.9.2.9.1~~	The interlock limits the release of radioactive and chemically hazardous material by reducing melter offgas load to restore plenum vacuum in the event vacuum is degraded.~~The interlock limits the release of radioactive and chemically hazardous material by terminating melter feed to the affected melter in the event of melter pressurization.~~	SS	Section 4.4.4.1.1.1, Appendix A Table A-1, LAW-DSA ~~Appendix C Table C4-1, LAW PDSA~~
	The interlock mitigates the consequences of facility worker exposure to radioactive and chemically hazardous material by initiating evacuation of the affected area.	SS	
	Limits the release of radioactive and chemically hazardous material by reducing the material at risk in the affected melter in the event that control signal or air to a Safety Instrumented System (SIS) component is lost.	SS	
	Reduces the probability of a release of radioactive and chemically hazardous material by preventing the final control elements of the SIS from failing in a manner that would cause a release.	SS	

Table 3-2 LOP and LVP Safety Functions

Equipment/Component Description	Credited Safety Function	Classifi-cation	Reference
Primary/Standby Film Cooler Low Flow Interlock (Melter 1 and Melter 2)~~Film Cooler Outlet High Temperature Interlock~~ ~~Section 3.9.2.2.1~~	The interlock reduces the probability of a release of radioactive and chemically hazardous material by preventing a failure of the offgas system confinement boundary caused by high temperatures.~~The interlock reduces the probability of a release of radioactive and chemically hazardous material by preventing a failure of the offgas system confinement boundary caused by high offgas temperatures due to low film cooler air supply.~~	**SS**	Section 4.4.4.1.4.1, Appendix A Table A-1, LAW-DSA ~~Appendix C Table C4-1, LAW PDSA~~
	Reduces the probability of a release of radioactive and chemically hazardous material by preventing the final control elements of the SIS from failing in a manner that would cause a release	**SS**	
SBS Low Level Interlocks (Melter 1 and Melter 2) ~~Section 3.9.2.2.4~~	The interlock reduces the probability of a release of radioactive and chemically hazardous material by preventing a failure of the offgas system confinement boundary caused by high offgas temperatures	**SS**	Section 4.4.4.1.5.1, Appendix A Table A-1, LAW-DSA ~~Appendix C Table C4-1, LAW PDSA~~
	The interlock mitigates the consequences of a release of radioactive and chemically hazardous material by providing a hydraulic seal to isolate offgas flow from the melter to beyond the SBS upon loss of system vacuum.~~The interlock limits the release of radioactive and chemically hazardous material ensuring offgas cannot flow through the SBS liquid barrier and cause a failure of the offgas exhaust system.~~	**SS**	
	Reduces the probability of a release of radioactive and chemically hazardous material by preventing the final control elements of the SIS from failing in a manner that would cause a release.	**SS**	
SBS High Level Interlocks (Melter 1 and Melter 2) ~~Section 3.9.2.2.3~~	The interlock reduces the probability of a release of radioactive and chemically hazardous material by limiting the introduction of water into the SBS.~~The interlock reduces the probability of a release of radioactive and chemically hazardous material by preventing a blockage of the offgas system at the SBS caused by high SBS liquid levels.~~	**SS**	Section 4.4.4.1.6.1, Appendix A Table A-1, LAW-DSA ~~Appendix C Table C4-1, LAW PDSA~~
	Reduces the probability of a release of radioactive and chemically hazardous material by preventing the final control elements of the SIS from failing in a manner that would cause a release.	**SS**	

Table 3-2 LOP and LVP Safety Functions

Equipment/Component Description	Credited Safety Function	Classifi-cation	Reference
WESP High Level Interlocks (Melter 1 and Melter 2) ~~Section 3.9.2.2.2~~	The interlock reduces the probability of a release of radioactive and chemically hazardous material by preventing an obstruction in the offgas system caused by high WESP liquid level.~~The interlock reduces the probability of a release of radioactive and chemically hazardous material, due to a loss of melter vacuum, by preventing an obstruction in the offgas system caused by high WESP level.~~	**SS**	Section 4.4.4.1.7.1, Appendix A Table A-1, LAW-DSA ~~Appendix C Table C4-1, LAW PDSA~~
	Reduces the probability of a release of radioactive and chemically hazardous material by preventing the final control elements of the SIS from failing in a manner that would cause a release	**SS**	
Offgas HEPA Preheater High Temperature Interlock~~HEPA Preheater Outlet High Temperature Interlock~~ ~~Section 3.9.2.3.1~~	The interlock reduces the probability of a release of radioactive and chemically hazardous material, by preventing a failure of the offgas confinement boundary caused by high offgas temperatures~~The interlock reduces the probability of a release of radioactive and chemically hazardous material, by preventing a failure of the offgas confinement boundary or an ignition of carbon bed media caused by high offgas temperatures.~~	**SS**	Section 4.4.4.1.8.1, Appendix A Table A-1, LAW-DSA ~~Appendix C Table C4-1, LAW PDSA~~
	The interlock reduces the probability of a release of radioactive and chemically hazardous material, by preventing a failure of the offgas confinement boundary caused by carbon bed media ignition	**SS**	
	Reduces the probability of a release of radioactive and chemically hazardous material by preventing the final control elements of the SIS from failing in a manner that would cause a release	**SS**	
Offgas ~~LVP~~ Header High~~/Low~~ Pressure Interlock ~~Section 3.9.2.7.1~~	The interlock limits the release of radioactive and chemically hazardous material by reducing sources of offgas and reconfiguring the offgas system to maintain melter plenum vacuum in the event of high pressure in the LVP header~~The interlock limits the release of radioactive and chemically hazardous material by terminating melter feed to both melters, stopping ammonia supply, and reconfiguring the offgas system in the event of high or low pressure in the LVP header.~~	**SS**	Section 4.4.4.1.9.1, Appendix A Table A-1, LAW-DSA ~~Appendix C Table C4-1, LAW PDSA~~
	Reduces the probability of a release of radioactive and chemically hazardous material by preventing the final control elements of the SIS from failing in a manner that would cause a release	**SS**	
Offgas Header Low Pressure Interlock	The interlock limits the release of radioactive and chemically hazardous material by reducing sources of offgas and reconfiguring the offgas system to maintain melter plenum vacuum in the event of low pressure in the LVP header	**SS**	Section 4.4.4.1.10.1, Appendix A Table A-1, LAW-DSA

Table 3-2 LOP and LVP Safety Functions

Equipment/Component Description	Credited Safety Function	Classifi-cation	Reference
	The interlock reduces the probability of a release of radioactive and chemically hazardous material by reconfiguring the offgas system to maintain melter structural integrity in the event of low pressure in the LVP header.	SS	
	Reduces the probability of a release of radioactive and chemically hazardous material by preventing the final control elements of the SIS from failing in a manner that would cause a release.	SS	
Carbon Bed High Differential CO Concentration Interlock~~Melter Offgas System (High Differential CO Interlock)~~ ~~Section 3.9.2.4.3~~	The interlock mitigates the consequences of a release of hazardous material by limiting the rate of combustion of a carbon bed fire and providing an alternate offgas flowpath.~~The interlock and associated support systems mitigates the release of chemically hazardous material in the event of a fire by detecting incipient mercury mitigation skid fire conditions and limiting oxygen flow to the carbon bed, thereby reducing the fire energy and the release rate.~~	**SS**	Section 4.4.4.1.11.1, Appendix A Table A-1, LAW-DSA ~~Appendix C Table C4-1, LAW PDSA~~
	The interlock mitigates the co-located worker (CLW) consequences of a release of radioactive and chemically hazardous material by limiting the rate of combustion of a carbon bed fire.	SS	
	The interlock mitigates the consequences of a release of hazardous material due to melter overpressurization by providing an alternate offgas flowpath.	SS	
	Reduces the probability of a release of radioactive and chemically hazardous material by preventing the final control elements of the SIS from failing in a manner that would cause a release.	SS	

Table 3-2 LOP and LVP Safety Functions

Equipment/Component Description	Credited Safety Function	Classifi-cation	Reference
TCO Heater High Temperature Interlock~~Catalytic Oxidizer/Reducer Skid Heater Interlock~~ ~~Section 3.9.2.5.2~~	The interlock reduces the probability of a release of radioactive and chemically hazardous material by preventing a failure of the offgas confinement boundary caused by high offgas temperatures.~~The melter offgas system shall maintain a continuous flow from the melter to the exhaust stack, which ensures that melter offgases are not released to normally occupied areas of the LAW Facility whenever a melter has a cold cap. The analysis relies on this flow to prevent exposure of the facility worker to nitrogen oxide (NO_x) gases, and to direct releases to the exhaust stack to achieve an elevated release and decrease the exposure to the co-located worker to acceptable levels. The catalytic oxidizer/reducer skid heater interlock prevents excessive temperatures that could result in a breach of the melter offgas confinement boundary and a subsequent melter offgas release event. This interlock, as associated detection instrumentation detects high heater temperatures, cuts off the heater before excessive temperatures are reached.~~	**SS**	Section 4.4.4.1.12.1, Appendix A Table A-1, LAW-DSA~~Section 4.4.14.3, LAW PDSA~~
	Reduces the probability of a release of radioactive and chemically hazardous material by preventing the final control elements of the SIS from failing in a manner that would cause a release	SS	
TCO Skid ~~Outlet~~ High Temperature Interlock ~~Section 3.9.2.5.3~~	The interlock reduces the probability of a release of radioactive and chemically hazardous material by preventing a failure of the offgas confinement boundary caused by high offgas temperatures.	**SS**	Section 4.4.4.1.13.1, Appendix A Table A-1, LAW-DSA ~~Appendix C Table C4-1, LAW PDSA~~
	Reduces the probability of a release of radioactive and chemically hazardous material by preventing the final control elements of the SIS from failing in a manner that would cause a release.	SS	
Ammonia High Flow Interlock ~~Section 3.9.2.5.5~~	The interlock limits the release of chemically hazardous material by isolating ammonia supply to the SCR upon detection of a high flow condition~~The interlock mitigates the release of ammonia caused by the ignition of an ignitable concentration of ammonia caused by excessive ammonia supply flow.~~	**SS**	Section 4.4.4.1.15.1, Appendix A Table A-1, LAW-DSA ~~Appendix C Table C4-1, LAW PDSA~~
	Reduces the probability of a release of radioactive and chemically hazardous material by preventing the final control elements of the SIS from failing in a manner that would cause a release.	SS	

Table 3-2 LOP and LVP Safety Functions

Equipment/Component Description	Credited Safety Function	Classifi-cation	Reference
Ammonia Dilution Air Low Flow Interlock ~~Section 3.9.2.5.6~~	Mitigates the release of ammonia by isolating ammonia supply if loss of dilution air flow is detected.~~The interlock mitigates the release of ammonia caused by the ignition of an ignitable concentration of ammonia resulting from inadequate air supply flow.~~	**SS**	Section 4.4.4.1.16.1, Appendix A Table A-1, LAW-DSA ~~Appendix C Table C4-1, LAW PDSA~~
	The interlock limits the release of chemically hazardous material by isolating ammonia supply if loss of dilution air flow is detected.	SS	
	Reduces the probability of a release of radioactive and chemically hazardous material by preventing the final control elements of the SIS from failing in a manner that would cause a release.	SS	
Caustic Scrubber ~~Low~~ Recirculation Low Pressure Interlock ~~Section 3.9.2.6.2~~	The interlock reduces the probability of a release of radioactive and chemically hazardous material by preventing a loss of LVP header vacuum from excessive air in-leakage from a failed recirculation line. ~~The interlock reduces the probability of a release of radioactive and chemically hazardous material, due to a loss of melter vacuum, by preventing excessive air in-leakage into the offgas system from a failed recirculation line.~~	**SS**	Section 4.4.4.1.17.1, Appendix A Table A-1, LAW-DSA ~~Appendix C Table C4-1, LAW PDSA~~
	Reduces the probability of a release of radioactive and chemically hazardous material by preventing the final control elements of the SIS from failing in a manner that would cause a release.	SS	
Caustic Scrubber Recirculation Low Flow Interlock~~Caustic Scrubber Loss of Cooling Interlock~~ ~~Section 3.9.2.6.3~~	The interlock reduces the probability of a release of radioactive and chemically hazardous material by preventing a failure of the exhausters from caustic scrubber outlet high temperatures.	**SS**	Section 4.4.4.1.18.1, Appendix A Table A-1, LAW-DSA ~~Appendix C Table C4-1, LAW PDSA~~
	Reduces the probability of a release of radioactive and chemically hazardous material by preventing the final control elements of the SIS from failing in a manner that would cause a release.	SS	
Caustic Scrubber Process Water Supply Low Pressure Interlock~~Caustic Scrubber Low Water Supply Pressure Interlock~~ ~~Section 3.9.2.6.6~~	The interlock reduces the probability of a release of radioactive and chemically hazardous material by preventing a loss of LVP header vacuum due to excessive air in-leakage from a failed process water line in the caustic scrubber system.	**SS**	Section 4.4.4.1.19.1, Appendix A Table A-1, LAW-DSA ~~Appendix C Table C4-1, LAW PDSA~~
	Reduces the probability of a release of radioactive and chemically hazardous material by preventing the final control elements of the SIS from failing in a manner that would cause a release.	SS	

Table 3-2 LOP and LVP Safety Functions

Equipment/Component Description	Credited Safety Function	Classification	Reference
~~Caustic Scrubber Drain Line Loop Seal~~ ~~Section 3.9.2.2.17~~	~~The drain line from the caustic scrubber to the caustic collection tank shall contain a loop seal capable of preventing in-leakage into the melter offgas system from the caustic collection tank under bounding conditions from the downstream exhausters.~~	~~SS~~	~~Appendix C Table C4-1, LAW PDSA~~
Offgas Exhauster 1A/1B/1C Shaft Seal Air Supply Low Pressure Interlock ~~Section 3.9.2.8.1~~ ~~Section 3.9.2.7~~	The interlock limits the release of radioactive and chemically hazardous material through the exhauster shaft seals by supplying regulated backup air pressure to the exhauster shaft seals.~~The interlock mitigates the release of radioactive and chemically hazardous material through the exhauster shaft seals by supplying back-up air pressure to the exhauster shaft seals.~~	SS	Section 4.4.4.1.21.1, Appendix A Table A-1, LAW-DSA ~~Appendix C Table C4-1, LAW PDSA~~
	Reduces the probability of a release of radioactive and chemically hazardous material by preventing the final control elements of the SIS from failing in a manner that would cause a release.	SS	
Offgas Exhauster 1A/1B/1C Shaft Seal Low Pressure Interlock ~~Section 3.9.2.8.4~~	The interlock limits the release of radioactive and chemically hazardous material through the exhauster shaft seals by supplying back-up air pressure to the exhauster shaft seals~~The interlock limits the release of radioactive and chemically hazardous material through the exhauster shaft seals by supplying back-up air pressure to the exhauster shaft seals.~~	SS	Section 4.4.4.1.20.1, Appendix A Table A-1, LAW-DSA ~~Appendix C Table C4-1, LAW PDSA~~
	Reduces the probability of a release of radioactive and chemically hazardous material by preventing the final control elements of the SIS from failing in a manner that would cause a release.	SS	
Loss of Normal Power to Safety Equipment Interlock ~~Loss of Normal Power Interlock~~ ~~Section 3.9.2.10.1~~	The interlock limits the release of radioactive and chemically hazardous material by reconfiguring the offgas system to maintain melter plenum vacuum in the event of loss of normal power to the safety equipment, primarily exhausters.~~The interlock limits the release of radioactive and chemically hazardous material, in the event of loss of normal power, by terminating feed to both melters, stopping ammonia supply, and reconfiguring the offgas system in the event of a loss of normal power.~~	SS	Section 4.4.4.1.22.1, Appendix A Table A-1, LAW-DSA ~~Appendix C Table C4-1, LAW PDSA~~
	Reduces the probability of a release of radioactive and chemically hazardous material by preventing the final control elements of the SIS from failing in a manner that would cause a release.	SS	

Table 3-2 LOP and LVP Safety Functions

Equipment/Component Description	Credited Safety Function	Classifi-cation	Reference
~~Offgas Stack Condensate Drain Line~~ ~~Section 3.4.2.25~~	~~Provides a flow path with sufficient diameter to ensure line does not plug.~~	~~SS~~	~~Appendix C Table C4-1, LAW PDSA~~
	~~The offgas stack condensate drain line shall limit the ingress of air flow into the offgas system.~~	~~SS~~	
~~Analyzer Room High Temperature Interlock~~ ~~Section 3.9.2.11~~	~~The analyzer room high temperature interlock prevents the release of melter offgas into the LAW Vitrification Building from failed offgas analyzer tubing by de-energizing significant electrical loads in the analyzer room when the melter offgas system is reconfigured.~~	~~SS~~	~~Appendix C Table C4-1, LAW PDSA~~
Vacuum Breaker ~~Section 3.4.2.26~~	Mitigates the consequences of a release of radioactive and chemically hazardous material by ensuring sufficient makeup air to support exhauster operation during high/low header vacuum, and loss of power conditions.~~Reduces the probability of a release of radioactive and chemically hazardous material by ensuring sufficient makeup air to support exhauster operation during high/low header vacuum, and loss of power conditions.~~	SS	Section 4.4.3.16.1, Appendix A Table A-1, LAW-DSA ~~Appendix C Table C4-1, LAW PDSA~~
Pneumatic Permissive	Reduces the probability of a release of radioactive and chemically hazardous material by preventing a failure of the offgas confinement boundary or exhausters from offgas high temperatures.	SS	Section 4.4.3.15.1, Appendix A Table A-1, LAW-DSA
	Reduces the probability of a release of radioactive and chemically hazardous material by ensuring an unobstructed offgas flow path.		

Basis Discussion: All SSCs for the LOP and LVP offgas system, are credited SS for confinement, and as noted in Table 3-2. For more information on instruments, controls, and safety interlocks see section 3.9.2. [ALARA]

Verification: Verification is expected to be achieved through the following:

Verif. Method	Verif. By	Plan	Notes/Comments
R	**ENG**	Review design to verify the correct safety classifications and safety functions.	~~Document in EQPs.~~

3.4.2.20 Seismic Design

Requirement: The LOP and LVP systems shall meet SC-III requirements. Based on natural phenomena and confinement considerations, the offgas system components listed in Table 3-3, shall be designed to meet SC-III requirements and perform their safety function under design basis seismic loads. [Safety Criterion 4.1-3, SRD][Sections 4.4.3.1.3, 4.4.3.1.4, 4.4.3.8.3, 4.4.3.8.4, 4.4.3.9.3, 4.4.3.9.4, 4.4.3.11.3, 4.4.3.11.4, 4.4.3.13.3,

4.4.3.13.4, 4.4.3.16.3, 4.4.3.16.4, 4.4.3.17.3, 4.4.3.17.4, 4.4.3.18.3, 4.4.3.18.4, 4.4.3.19.3, 4.4.3.19.4, Appendix A Table A-1, LAW-DSA]

Table 3-3 LOP and LVP Seismic Equipment

Description	Seismic Category	Reference
Offgas Confinement to Elevated Release • offgas confinement boundary • offgas liquid confinement boundary (LOP-SCB-00001/-00002, LOP-VSL-00001/-00002, LVP-SCB-00001)	SC-III	Section 4.4.3.1.3, 4.4.3.1.4 Appendix A Table A-1, LAW-DSA
Offgas Exhausters	SC-III	Section 4.4.3.17.3, 4.4.3.17.4 Appendix A Table A-1, LAW-DSA
Submerged Bed Scrubber (SBS) Vessel	SC-III	Section 4.4.3.8.3, 4.4.3.8.4 Appendix A Table A-1, LAW-DSA
SBS PSVs and Chilled Water Cooling Coils • SBS chilled water cooling coil pressure relief valves, external cooling jacket pressure relief valves, and piping internal to the vessel	SC-III	Section 4.4.3.9.3, 4.4.3.9.4 Appendix A Table A-1, LAW-DSA
Valves (LOP-FV-1140 and LOP-FV-2140) Design (WESP modulating valves)	SC-III	Section 4.4.3.11.3, 4.4.3.11.4 Appendix A Table A-1, LAW-DSA
Stack Drain Line Restriction Orifice (LVP-RO-00002)	SC-III	Section 4.4.3.18.3, 4.4.3.18.4 Appendix A Table A-1, LAW-DSA
Vessel Vent Restriction Orifice (LVP-RO-00001)	SC-III	Section 4.4.3.19.3, 4.4.3.19.4 Appendix A Table A-1, LAW-DSA
Vacuum Breaker	SC-III	Sections 4.4.3.16.3, 4.4.3.16.4, Appendix A Table A-1, LAW-DSA
~~Offgas system:~~ ~~• Melter offgas system confinement boundary~~ ~~– Melter offgas system piping (including SBS standby line),~~ ~~– HEPA filter housing,~~ ~~– Offgas components (WESP, SBS, etc.),~~ ~~– Mercury mitigation exhaust path~~ ~~– Interfacing system components that form part of the confinement boundary (e.g., SDJ sampling interfaces)~~ ~~• Melter offgas HEPA filter train isolation valves~~ ~~• Melter offgas HEPA filter preheaters~~ ~~– Preheater LVP-HTR-00001A and -/00003A confinement boundary~~ ~~– Preheater LVP-HTR-00001B /and -00003B confinement boundary and internal heating elements~~ ~~• Melter offgas system exhausters~~ ~~• Melter offgas exhauster check valves for backflow prevention, isolation dampers~~ ~~• Non-manual isolation valves within the melter offgas system~~	~~SC-III~~	~~Section 4.4.22.3, Appendix 3A Table 3A-7, Appendix C Table C4-1, LAW PDSA~~

Table 3-3 LOP and LVP Seismic Equipment

Description	Seismic Category	Reference
• ~~Isolation valves on the demineralized water supplies to bulge LOP-BULGE-00001, LOP-BULGE-00002, and the priming lines to LOP-PMP-00001, LOP-PMP-00002, LOP-PMP-00004, and LOP-PMP-00005~~ • ~~SBS condensate purge pump shutdown components~~ • ~~SBS water purge pump shutdown components~~ • ~~WESP demineralized water flush valve~~ • ~~Mercury mitigation skid bypass valve~~ • ~~Mercury mitigation skid carbon adsorber isolation valves~~ • ~~Carbon bed water addition line and flow restriction device~~ • ~~Vessel vent header pressure control valve~~ • ~~SCO/SCR Catalytic oxidizer/reducer unit skid heater~~ • ~~Ammonia supply isolation valve on the ammonia/air dilution skid~~ • ~~Dilution air supply isolation valve on the ammonia/air dilution skid~~ • ~~SCO/SCR Catalytic oxidizer/reducer unit skid bypass valve~~ • ~~Loop seal and drain line from the caustic scrubber to the caustic collection tank~~ • ~~Caustic recirculation line isolation valve (including intervening piping between isolation valve and the caustic scrubber)~~ • ~~Caustic scrubber process water line isolation valve (including intervening piping between isolation valve and the caustic scrubber)~~ • ~~Caustic scrubber bypass valve~~ • ~~SBS process cooling water PRVs and associated 3-way valves~~		
~~Exhaust Stack (natural phenomena hazard (NPH) interaction effects)~~ • ~~Melter offgas exhaust stack piping~~	~~SC-III~~	~~Appendix 3A, Table 3A-7, LAW PDSA~~
~~Instrumentation and Controls~~ • ~~Safety instrumentation associated with active seismic category SC-III SSCs~~ ~~Valves actuated by interlock to open on high offgas temperatures at the film cooler outlet~~	~~SC-III~~	~~Section 4.4.14.3, Appendix 3A Table 3A-7, Appendix C, Table C4-1, LAW PDSA~~
~~Anchorages (NPH interaction effects)~~ • ~~LOP-VSL-00001/2~~	~~SC-III / SC-IV~~	~~Appendix 3A, Table 3A-7, LAW PDSA~~
~~Chilled Water System (CHW)~~ • ~~Internal CHW cooling coil in the SBS for confinement of chilled water~~ • ~~Dual pressure safety valves (PSVs) connected to a three-way valve (three such arrangements, one on the line to the internal CHW cooling coil, and one on each of the lines to SBS and SCV cooling jackets)~~	~~SC-III~~	~~Appendix 3A, Table 3A-7, LAW PDSA~~
~~Exhauster Shaft Seal - Backup Purge Air Supply~~	~~SC-III~~	~~Appendix 3A, Table 3A-7, LAW PDSA~~

Table 3-3 LOP and LVP Seismic Equipment

Description	Seismic Category	Reference
~~• Piping and components from the backup purge air supply to the exhauster shaft seals. Normal purge air supply piping from the safety isolation valve to the exhauster shaft seals.~~		
LAW Facility AMR/LVP piping~~Ammonia Reagent System Ammonia transfer piping and appurtenances within the LAW Facility~~	SC-III	Section 4.4.3.13.3, 4.4.13.4, Appendix A Table A-1, LAW-DSA~~Appendix 3A Table 3A-7, Appendix C Table C4-1, LAW PDSA~~

Basis Discussion: The *Safety Requirements Document* (SRD), safety criterion 4.1-3 details the equivalence of the WTP seismic category to the seismic performance category of DOE-STD-1020-94, *Natural Phenomena Hazards Design and Evaluation Criteria for Department of Energy Facilities*. The SRD also states that SSCs designated as safety SSCs be designed to withstand the effects of NPH events (e.g., earthquakes, wind, and floods) without loss of capability to perform specified safety functions. [ALARA]

Verification: Verification is expected to be achieved through the following:

Verif. Method	Verif. By	Plan	Notes/Comments
A	**ENG**	Perform an analysis to verify the ability of the systems piping and equipment to withstand a seismic category SC-III event to maintain confinement.	
R	**ENG**	Review design to verify alignment with analysis.	May be documented in assessment/evaluation report.

3.4.2.21 ~~Melter Offgas Confinement Boundary (Pressures)~~Deleted

~~**Requirement**: The confinement boundary shall be designed to maintain confinement of the melter offgas at pressures up to and including those associated with three exhausters during and after a design basis seismic event. [Appendix C Table C4-1, LAW PDSA] (A.1)~~

~~**Basis Discussion:** The confinement boundary passively mitigates the release of radioactive and chemically hazardous material by providing a primary release pathway from the melter through the melter offgas system exhausters and to the stack exit.~~

~~**Verification:** Verification is expected to be achieved through the following:~~

~~Verif. Method~~	~~Verif. By~~	~~Plan~~	~~Notes/Comments~~
~~**A**~~	~~**ENG**~~	~~Perform an analysis to verify the ability of the systems melter offgas confinement boundary to withstand the pressure of three operating exhausters during and after a design basis seismic event.~~	
~~**R**~~	~~**ENG**~~	~~Review design to verify alignment with analysis.~~	~~May be documented in assessment/evaluation report.~~

3.4.2.22 ~~Melter Offgas Confinement Boundary (Injected Ammonia Unobstructed Flow Path)~~Deleted

~~**Requirement:** The melter offgas confinement boundary shall be designed to provide confinement and an unobstructed flow path of injected ammonia from the TCO skid to the melter offgas system stack exit under design basis temperatures and pressures. [Appendix C Table C4-1, LAW PDSA] (A.1)~~

~~**Basis Discussion:** The confinement boundary passively mitigates the release of radioactive and chemically hazardous material by providing a primary release pathway from the melter through the melter offgas system exhausters and to the stack exit.~~

~~**Verification:** Verification is expected to be achieved through the following:~~

~~Verif. Method~~	~~Verif. By~~	~~Plan~~	~~Notes/Comments~~
~~R~~	~~ENG~~	~~Review design to verify the melter offgas system confinement and unobstructed flow path of injected ammonia from the TCO skid to the melter offgas system stack exit under design basis temperatures and pressures.~~	

3.4.2.23 ~~Melter Offgas Confinement Boundary (SBS to Stack Exit)~~Deleted

~~**Requirement:** The confinement boundary shall be designed to provide confinement of melter offgas from the SBS to the melter offgas system stack exit under design basis temperatures associated with design basis equipment failures (e.g., runaway preheater events, loss of cooling events). [Appendix C Table C4-1, LAW PDSA] (A.1)~~

~~**Basis Discussion:** The confinement boundary passively mitigates the release of radioactive and chemically hazardous material by providing a primary release pathway from the melter through the melter offgas system exhausters and to the stack exit.~~

~~**Verification:** Verification is expected to be achieved through the following:~~

~~Verif. Method~~	~~Verif. By~~	~~Plan~~	~~Notes/Comments~~
~~A~~	~~ENG~~	~~Perform an analysis to verify the ability of the systems melter offgas confinement boundary to withstand the design basis temperatures associated with design basis equipment failures.~~	
~~R~~	~~ENG~~	~~Review design to verify alignment with analysis.~~	~~May be documented in assessment/evaluation report.~~

3.4.2.24 Melter Offgas Confinement Boundary (Mercury Mitigation Skid Fire)

Requirement: The mercury mitigation skid units and associated piping with the inlet valves closed shall maintain the offgas confinement boundary during the evaluated fire scenario. The carbon bed adsorbers pressure boundary shall remain intact up to a localized temperature of 634°F. [Sections 4.4.3.1.3, 4.4.3.1.4, Appendix A Table A-1, LAW-DSA] (A.1)~~The offgas confinement boundary, from the SBS to the melter offgas system exhaust stack, shall be designed to provide confinement of melter offgas during a mercury mitigation skid fire. The mercury mitigation skid units and associated piping, with the inlet valves closed, shall be designed to maintain the confinement boundary during the evaluated fire. [Appendix C Table C4-1, LAW PDSA] (A.1)~~

Basis Discussion: The confinement boundary mitigates the release of chemically hazardous material by providing a primary exhaust pathway of melter offgas during a mercury mitigation skid fire and maintaining a confinement boundary ~~in the mercury mitigation skid to limit the fire burn rate~~.

Verification: Verification is expected to be achieved through the following:

Verif. Method	Verif. By	Plan	Notes/Comments
A	**ENG**	Perform an analysis to verify the ability of the system's melter offgas confinement boundary to provide confinement during a mercury mitigation skid fire~~.~~ and remain intact up to a localized temperature of 634°F.	
R	**ENG**	Review design to verify alignment with analysis.	May be documented in assessment/evaluation report.

3.4.2.25 ~~Offgas Stack Condensate Drain Line~~Deleted

~~**Requirement:** The offgas stack condensate drain line shall be designed to maintain an adequate flow path for stack condensation. The offgas stack condensate drain line orifice shall be designed to sufficiently restrict air flow sufficient to preclude overwhelming the exhausters. [Appendix C Table C4-1, LAW PDSA]~~

~~**Basis Discussion:** The stack condensate drain line provides a flow path with sufficient diameter to ensure the line doesn't plug and the orifice in the drain line limits the ingress of the air flow into the offgas system.~~

~~**Verification:** Verification is expected to be achieved through the following:~~

~~Verif. Method~~	~~Verif. By~~	~~Plan~~	~~Notes/Comments~~
~~**A**~~	~~**ENG**~~	~~Perform an analysis to verify the sizing of the diameter of the condensate drain line and orifice.~~	
~~**R**~~	~~**ENG**~~	~~Review design to verify alignment with analysis.~~	~~May be documented in assessment/evaluation report.~~

3.4.2.26 LVP Vacuum Breaker

Requirement: The vacuum breaker shall allow sufficient air inflow to protect the melter from excessive vacuum and maintain continued exhauster operation during reconfiguration of the melter offgas system, without causing a loss of melter vacuum due to too much vacuum breaker air in-leakage. The vacuum breaker shall maintain system pressure between -60 in. W.G. and -67 in. W.G. at the exhauster suction, and shall be sized for a flow capacity of at least 4275 scfm. [Sections 4.4.3.16.3, 4.4.3.16.4, Appendix A Table A-1, LAW-DSA](A.1)~~The LVP shall be designed to have a vacuum breaker that allows sufficient air inflow to maintain continued exhauster operation during a loss of power or high/low header pressure event. This vacuum breaker shall be designed to prevent a loss of melter depression due to too much in-leakage. [Appendix C Table C4-1, LAW PDSA] (A.1)~~

Basis Discussion: Reduces the probability of a release of radioactive and chemically hazardous material by ensuring sufficient makeup air to support exhauster operation during high/low header vacuum, and loss of power conditions.

Verification: Verification is expected to be achieved through the following:

Verif. Method	Verif. By	Plan	Notes/Comments
A	**ENG**	Perform an analysis to determine the sizing of the vacuum breaker to maintain exhauster suction pressure between -60 in. W.G. and -67 in. W.G. with a flow capacity of at least 4275 scfm~~allow sufficient air inflow~~.	
R	**ENG**	Review design to verify alignment with analysis.	May be documented in assessment/evaluation report.
T	**SU/COM**	Test to verify the vacuum breaker maintains offgas header pressure between -60 in WG and -67 in WG, measured at a location between the caustic scrubber and the exhauster suction, with the offgas system in the reconfiguration line-up. The test shall confirm acceptable pressure for one, two and three online fan configurations (at reconfiguration speed).	

3.4.2.27 Deleted – Relocated to 3.7.2.6~~Ammonia Reagent System (Valve AMR-V-40886 and Piping Exterior to Facility)~~

~~**Requirement:** LAW ammonia isolation valve (AMR-V-40886) and ammonia piping exterior between the LAW Facility and the ammonia isolation valve, shall be designed to maintain primary confinement of anhydrous ammonia under the following requirements:~~

- ~~Provide confinement for ammonia for normal and design basis loading.~~
- ~~Provide confinement, in conjunction with combustible loading limits, for ammonia during and after expected fire events.~~
- ~~Provide confinement of ammonia during and after design basis, applicable natural phenomena hazard (lightning, high wind, and seismic).~~

~~[Appendix C Table C4-1, LAW PDSA]~~

~~**Basis Discussion:** Valve AMR-V-40886 which defines the LAW Facility boundary with respect to the ammonia transfer line, is located external to the LAW facility. For a leak that releases ammonia at a rate of less the 31.4 g/s, which is approximately 46% of the maximum flow of the ammonia transfer line to LAW, the consequences would be low to the public and co-located workers. Leaks larger than 31.4 g/s, would result in the low consequences to the public and moderate consequences to the co-located workers.~~

~~**Verification**: Verification is expected to be achieved through the following:~~

~~Verif. Method~~	~~Verif. By~~	~~Plan~~	~~Notes/Comments~~
~~**A**~~	~~**NSE**~~	~~Perform an analysis/evaluation of the potential hazards of ammonia vapor for the exterior piping from the LAW Facility up to and including the ammonia isolation valve (AMR-V-40886) to verify the features to apply to the design.~~	~~Include Operations and Industrial Safety/ Hygiene participation in the analysis / evaluation.~~
~~**A**~~	~~**NSE**~~	~~Perform an analysis/evaluation of the normal and design basis loading of ammonia vapor for the exterior piping from the LAW Facility up to and including the ammonia isolation valve (AMR-V-40886) to verify the features to apply to the design.~~	

~~Verif. Method~~	~~Verif. By~~	~~Plan~~	~~Notes/Comments~~
~~A~~	~~NSE~~	~~Perform an analysis/evaluation, in conjunction with combustible loading limits, for ammonia during and after expected fire events of ammonia vapor for the exterior piping from the LAW facility up to and including the ammonia isolation valve (AMR-V-40886) to verify the features to apply to the design.~~	
~~R~~	~~ENG~~	~~Review design to verify conformance with controls or design features selected in the analysis/evaluation.~~	

3.4.2.29 LOP/LVP Primary Confinement Boundary Components Design

3.4.2.29.1 Service Conditions Associated with Melter Offgas

Requirement: LOP/LVP primary confinement boundary components downstream (e.g., piping, in-line components, vessels) shall be designed for service conditions associated with melter offgas. LOP/LVP primary confinement boundary components shall be designed to maintain their integrity and functionality at evaluated temperatures and pressures for their respective locations in the system. [Sections 4.4.3.1.3, 4.4.3.1.4, Appendix A Table A-1, LAW-DSA]

Basis Discussion: The offgas confinement boundary mitigates the release of radioactive and chemically hazardous material by providing an elevated release.

Verification: Verification is expected to be achieved through the following:

Verif. Method	Verif. By	Plan	Notes/Comments
A	ENG	Perfrom analysis to determine the service conditions for the LOP/LVP primary confinement boundary components associated with melter offgas.	
R	ENG	Review design to verify LOP and LVP systems' primary confinement boundary components are designed to maintain their integrity and functionality at evaluated temperatures and pressures for their respective locations in the system.	

3.4.2.29.2 Service Conditions Associated with the LVP Exhauster Vacuum

Requirement: LOP/LVP primary confinement boundary components (e.g., piping, in-line components, vessels) shall be designed for service conditions associated with the LVP exhauster vacuum (LVP-EXHR-00001A/00001B/00001C). LOP/LVP primary confinement boundary components shall be designed to maintain integrity and functionality at the maximum vacuum capable of being experienced at their respective locations in the system. [Sections 4.4.3.1.3, 4.4.3.1.4, Appendix A Table A-1, LAW-DSA]

Basis Discussion: The offgas confinement boundary mitigates the release of radioactive and chemically hazardous material by providing an elevated release.

Verification: Verification is expected to be achieved through the following:

Verif. Method	Verif. By	Plan	Notes/Comments
A	ENG	Perform analysis to determine the service conditions for the LOP/LVP primary confinement boundary components associated with the LVP exhauster.	
R	ENG	Review design to verify LOP and LVP systems' primary confinement boundary components are designed to maintain their integrity and functionality the maximum vacuum capable of being experienced at their respective locations in the system.	

3.4.4.1 Removal of Offgas Mechanical Equipment

Requirement: The LOP and LVP systems' replaceable mechanical equipment shall be designed to be removable through removal routes into maintenance areas. [Section 11.3.2.3, BOD]~~[Section 9.1, ORD]~~

Basis Discussion: The design of the replaceable mechanical offgas equipment provides the capability and sizing to be removed and moved though available routes to maintence areas. ~~Provisions should be made in the layout for adequate maintenance areas that allow access around the equipment for servicing, inspecting, and replacing equipment and components.~~ [ALARA]

Verification: Verification is expected to be achieved through the following:

Verif. Method	Verif. By	Plan	Notes/Comments
I	ENG	Perform inspection to verify the mechanical equipment is removable and sized to be movable through available routes to maintenance areas.	

3.4.4.14 ~~Plant Safety~~Deleted

~~**Requirement:** The LOP and LVP systems' requirements for manual lifting of more than 40 lbs. (refer to the National Institute for Occupational Safety and Health (NIOSH), *Work Practices Guide for Manual Lifting* [1991]) of equipment or materials as a part of routine operation shall be evaluated, taking into consideration the number of times to be lifted, location, and how far the load is to be carried. [Section 8.1.1, ORD]~~

~~**Basis Discussion:** The design requirement is to not select equipment or materials over 40 lbs. for routine manual use.~~

~~**Verification:** Verification is expected to be achieved through the following:~~

~~Verif. Method~~	~~Verif. By~~	~~Plan~~	~~Notes/Comments~~
~~R~~	~~ENG~~	~~Review operations documentation to verify manual lifting requirements of more than 40 lbs. (NIOSH 1991) of equipment or materials as a part of routine operation, taking into consideration the number of times to be lifted, location, how far load is to be carried.~~	

3.4.4.19 Instrument Cable Length

Verification: Verification is expected to be achieved through the following:

Verif. Method	Verif. By	Plan	Notes/Comments
~~R~~I	ENG/OPS	~~Review design~~Inspect the system to verify valves and instruments with measuring elements have sufficient cable length so that the element can be withdrawn without disconnecting the cable terminations.	May be documented in assessment/evaluation report.

3.4.4.21 Instrument Detector Location

Requirement: Whenever possible, the ~~The~~ LOP and LVP systems' instruments and detectors that require maintenance shall be located outside the C3 contamination areas. However, transducer panels housing liquid level systems and associated remote input and output, and pressure transducers, shall be in C3 classified areas as a precaution against back-contamination. [Section 11.16, ORD]

Basis Discussion: Locating transducer panels housing liquid level systems in the C3 classified areas serves as a precaution against back-contamination. [ALARA]

Verification: Verification is expected to be achieved through the following:

Verif. Method	Verif. By	Plan	Notes/Comments
~~A~~	~~ENG~~	~~Perform assessment to determine instruments and detectors that require maintenance.~~	~~May be documented in assessment/evaluation report.~~
R	ENG	Review design to verify instruments and detectors that require maintenance are located outside the C3 contamination areas.	

3.5.2.3 SBS and SBS Condensate Cooling Pressure Relief

Requirement: SBS chilled water cooling coil pressure relief valves (PSV-1084, PSV-1149, PSV-2084, PSV-2149) shall maintain system pressure less than or equal to the design pressure of the cooling coil piping (internal to the vessel). SBS chilled water cooling coil pressure relief valves PSVs (LOP-PSV-1084/1149 and LOP-PSV-2084/2149) open at a pressure less than or equal to 125 psig. [Section 4.4.3.9.3, 4.4.3.9.4, Appendix A Table A-1, LAW-DSA]~~The SBS and SBS condensate chilled water cooling coil design shall include overpressure protection. The pressure relief on each of the PSVs shall be set such that failure of the cooling water line cannot occur because of a line isolation and heatup. [Sections 4.4.22.1, 4.4.22.3, LAW PDSA]~~

Basis Discussion: Overpressure protection prevents flooding of the SBS and SBS condensate vessel due to in-leakage from chilled water flow when the chilled water flow is re-established. The pressure relief on the cooling lines associated with the SBS and SBS condensate vessels (internal chilled water cooling coil, and vessel cooling jackets) prevents failure of the cooling lines due to over pressurization when isolated. Without this safety function, flooding of the SBS and SBS condensate vessel can occur due to leakage into the vessel when the chilled water flow is re-established.

The pressure relief on each of the PSVs are set such that failure of the cooling water line cannot occur because of line isolation and heat-up. [ALARA]

Verification: Verification is expected to be achieved through the following:

Verif. Method	Verif. By	Plan	Notes/Comments
R	**ENG**	Review design to verify the melter offgas system SBS and SBS condensate chilled water cooling coils include overpressure protection and the pressure relief valves (PSV-1084, PSV-1149, PSV-2084, PSV-2149) open at a pressure ≤125 psig.	

3.5.2.4 Melter Offgas Confinement Boundary (Secondary Pathway)

Requirement: The offgas confinement boundary shall provide a release pathway to a normally unoccupied location upon loss of melter vacuum. The offgas confinement boundary shall provide a release pathway and discharge location in the process cell (L-0123/-0124). [Section 4.4.3.1.3, 4.4.3.1.4, Appendix A Table A-1, LAW-DSA]~~The LOP offgas design shall provide (secondary pathway) confinement and an unobstructed flow path of offgas from the melter shell to the SBS under design-basis temperatures and pressures. [Appendix C Table C4-1, LAW PDSA]~~ (A.1)

Basis Discussion: The confinement boundary mitigates the release of offgas to the melter gallery by providing a secondary release pathway to the unoccupied process cell. The melter shell (gas barrier) forms the outer confinement barrier for the melter plenum that is ventilated by the melter offgas system.

[ALARA]

Verification: Verification is expected to be achieved through the following:

Verif. Method	Verif. By	Plan	Notes/Comments
R	**ENG**	Review design to verify the melter offgas system (secondary pathway) provides a release pathway to a normally unoccupied location (L-0123/-0124) upon loss of melter vacuum. ~~Review design to verify the melter offgas system (secondary pathway) provides unobstructed flow confinement and an unobstructed flow path of offgas from the melter shell to the SBS under design-basis temperatures and pressures.~~	

3.5.2.5 ~~Melter Offgas Confinement Boundary (SBS and SBS Condensate Vessel Blind Flanges)~~Deleted

~~**Requirement:** Blind flanges shall be provided to be installed to isolate the SBS and SBS Condensate Vessel spray nozzles and wands from the demineralized water supply piping except during vessel decontamination or flushing operations. The demineralized water supplies shall not be allowed to be connected if cold caps are present on either melter. This control prevents inadvertent flush water addition to the SBS and SBS condensate vessels when the melters are off-gassing NOx. [Appendix C Table C4-1, LAW PDSA]~~

~~**Basis Discussion:** The confinement boundary mitigates the release of radioactive and chemically hazardous material by providing a primary release pathway from the melter through the melter offgas system exhausters and to the stack exit.~~

~~**Verification:** Verification is expected to be achieved through the following:~~

~~Verif. Method~~	~~Verif. By~~	~~Plan~~	~~Notes/Comments~~
~~R~~	~~ENG~~	~~Review design to verify the melter offgas system are blind flanged on the SBS and SBS condensate vessels.~~	

3.5.2.6 Melter Special Relief Device ~~Melter Offgas Confinement Boundary (SBS Secondary Pathway Relief Device)~~

Requirement: The melter special relief device shall vent offgas to an unoccupied location before reaching a pressure that would overpressurize the melter. The special relief device shall lift at ≤ 10 in. W.G. and relieve rated flow at ≤ 13 in. W.G. [Sections 4.4.3.6.3, 4.4.3.6.4, Appendix A Table A-1, LAW-DSA]~~The melter offgas (confinement boundary – secondary pathway) relief device shall vent an offgas release to an unoccupied location (process cell) upon over-pressurization of the melter plenum. The special relief device shall relieve pressure before the melter exceeds its structural design pressure limit. [Appendix C Table C4-1, LAW PDSA]~~

Basis Discussion: The confinement boundary mitigates the release of offgas to the melter gallery by providing a secondary release pathway to the unoccupied process cell. The melter shell (gas barrier) forms the outer confinement barrier for the melter plenum that is ventilated by the melter offgas system. [ALARA]

Verification: Verification is expected to be achieved through the following:

Verif. Method	Verif. By	Plan	Notes/Comments
A/R	ENG	Analyze/review design of the melter offgas system secondary pathway to verify there is a special relief device that vents to an unoccupied location (process cell) at ≤ 10 in. W.G. and relieve rated flow at ≤ 13 in. W.G.~~Analyze/review design of the melter offgas system secondary pathway to verify there is a relief device that vents to an unoccupied location (process cell) that relieves pressure prior to exceeding the structural design pressure of the melter.~~	
T	**SU/COM**	Test to verify the melter special relief device lifts s at ≤ 10 in. W.G. and relieve rated flow at ≤ 13 in. W.G.	

3.5.2.7 SBS Design

3.5.2.7.1 SBS Design Life, Conditions, and Materials of Construction

Requirement: The SBS vessel, downcomer, distributor plate, and packing bed shell shall be designed for the life of the facility and design basis process conditions. The SBS vessel, downcomer, distributor plate, and packing bed shell shall be of welded, Hastelloy C-22 alloy construction. [Sections 4.4.3.8.3, 4.4.3.8.4, Appendix A Table A-1, LAW-DSA]

Basis Discussion: Non-replaceable, permanent LOP and LVP Plant equipment are designed to last the life of the facility (40 years), inclusive of maintenance (Section 3.4.1.5, above). Materials of construction selections consider the effects of chemical, radiological, and thermal exposure and are based on proven performance, value engineering principles, and fit-for-function principles (Section 3.4.1.6, above).

Verification: Verification is expected to be achieved through the following:

Verif. Method	Verif. By	Plan	Notes/Comments
R	ENG	Review design to verify design life of SBS vessel, downcomer, distributor plate, and packing bed shell is the same as the design life of the facility at design basis process conditions.	
R	ENG	Review design to verify the materials of construction of the SBS vessel, downcomer, distributor plate, and packing bed shell is welded, Hastelloy C-22 alloy.	

3.5.2.7.2 SBS Vessel Distributor Plate

Requirement: The SBS vessel distributor plate shall promote acceptable quenching of the melter offgas. The SBS vessel distributor plate shall discharge at approximately 35.5 inches above the vessel tangent line, and shall work in conjunction with the SBS Low Level Interlock to quench the offgas. [Sections 4.4.3.8.3, 4.4.3.8.4, Appendix A Table A-1, LAW-DSA]

Basis Discussion: The SBS Vessel distributor plate contributes to the prevention of the offgas system from overheating.

Verification: Verification is expected to be achieved through the following:

Verif. Method	Verif. By	Plan	Notes/Comments
A	ENG	Perform an analysis to determine the flow rate of the SBS vessel distributor plate to promote acceptable quenching of the melter offgas	
R	ENG	Review the design to verify conformance to the analyzed configuration.	
R	ENG	Review design to verify SBS vessel distributor plate discharge is at approximately 35.5 inches above the vessel tangent line, and works with the SBS Low Level Interlock.	

3.5.2.7.3 SBS Internal Chilled Water Cooling Coil Piping

Requirement: SBS chilled water cooling coil piping (internal to the vessel) shall be designed for confinement of the CHW and exposure to process conditions. SBS chilled water cooling coil piping (internal to the vessel) shall be designed to withstand at least 237°F and 125 psig. [Sections 4.4.3.9.3, 4.4.3.9.4, Appendix A Table A-1, LAW-DSA]

Basis Discussion: The design of the SBS internal chilled water cooling coil piping contributes to protecting against an SBS cooling water leak impacting SBS vessel level.

Verification: Verification is expected to be achieved through the following:

Verif. Method	Verif. By	Plan	Notes/Comments
R	ENG	Review design to verify the internal chilled water cooling coil piping is designed for CHW confinement,	

Verif. Method	Verif. By	Plan	Notes/Comments
		process conditions, and withstand at least 237°F and 125 psig.	

3.5.2.7.4 SBS External Cooling Jacket Pressure Relief Valves

Requirement: SBS external cooling jacket pressure relief valves (PSV-1086, PSV-1150, PSV-2086, PSV-2150) shall maintain system pressure less than or equal to the design pressure of the piping at the SBS interface. SBS external cooling jacket pressure relief valves PSVs (LOP-PSV-1086/1150 and LOP-PSV-2086/2150) shall open at a pressure less than or equal to 125 psig. [Sections 4.4.3.9.3, 4.4.3.9.4, Appendix A Table A-1, LAW-DSA]

Basis Discussion: The design of the SBS external cooling jacket pressure relief valves contribute to protecting against an SBS overpressure.

Verification: Verification is expected to be achieved through the following:

Verif. Method	Verif. By	Plan	Notes/Comments
R	ENG	Review design to verify the SBS external cooling jacket pressure relief valves (PSV-1086, PSV-1150, PSV-2086, PSV-2150) maintain system pressure by opening at a pressure ≤125 psig.	

3.6.2.4 HEPA Filter Train Maximum Pressure Drop

Requirement: The offgas shall be provided with a continuous flowpath to an elevated release point-. The dP across the online HEPA filter train shall be less than 10 in. W.G. [Sections 4.4.3.1.3, 4.4.3.1.4, Appendix A Table A-1, LAW-DSA]

Basis Discussion: The confinement boundary mitigates the release of radioactive and chemically hazardous material by providing continuous flowthrough the melter offgas system exhausters and to the stack exit. [ALARA]

Verification: Verification is expected to be achieved through the following:

Verif. Method	Verif. By	Plan	Notes/Comments
A	ENG/ SUP	Perform an analysis to determine the pressure drop (maximum of 10 in. W.G.) through the HEPA filter train to ensure a continuous flowpath.	
R	ENG	Review design to verify alignment with analysis.	May be documented in assessment/evaluation report.

3.7.2.2 Carbon Bed Adsorber Water Addition Flow Restriction Device

Requirement: The carbon bed water addition flow restriction device shall limit the water addition flow rate to the LAW carbon beds such that blockage of the melter offgas system does not occur for the duration of the cold cap burn off. The flowrate of fire water into the carbon bed shall be limited to 77.6 gal/min. [Sections 4.4.3.12.3, 4.4.3.12.4, Appendix A Table A-1, LAW-DSA]~~The carbon bed adsorber water addition flow restriction device~~

~~shall be designed such that it limits the water flow rate to the LAW carbon beds to a value no greater than that associated with blockage of the melter offgas system for the duration of cold cap burn off, based on the maximum expected fire water system pressure. [Appendix C Table C4-1, LAW PDSA]~~

Basis Discussion: The carbon bed adsorber water addition flow restriction device reduces the probability of a release of chemically hazardous material by limiting the maximum water addition rate to the LAW carbon beds which could cause blockage of the offgas system.

Verification: Verification is expected to be achieved through the following:

Verif. Method	Verif. By	Plan	Notes/Comments
A	**ENG**	Perform an analysis to verify that the maximum flow rate for water addition is ≤77.6 gal/min will no cause a blockage of the melter offgas system.	
~~**R**~~	~~**ENG**~~	~~Review design to verify the carbon adsorber water flow restriction device can restrict flow per analysis.~~	
R	**ENG**	Review design to verify that the flowrate of fire water into the carbon bed is limited to 77.6 gal/min.	

3.7.2.5 Ammonia Reagent System (LAW Facility Piping Confinement) ~~(Piping Internal to Facility and the Ammonia Dilution Skid)~~

Requirement: The LAW Facility LVP piping (from LVP-V-01554 through the ammonia injection manifold) shall maintain confinement under the maximum negative pressure it can experience at its respective location in the system. The LAW Facility LVP piping (from LVP-V-01554 through the ammonia injection manifold) shall be designed for negative pressure less than or equal to -7.2 psig. [Sections 4.4.3.13.3, 4.4.3.13.4, Appendix A Table A-1, LAW-DSA]~~The ammonia system piping internal to the facility and the ammonia dilution skid shall be designed with the following:~~

- ~~Provide confinement for ammonia for normal and design basis loading.~~

~~Provide confinement of anhydrous ammonia during and after the design basis seismic event.~~

- ~~Provide confinement, in conjunction with combustible loading limits, for ammonia during and after expected fire event.~~

~~[Appendix C Table C4-1, LAW PDSA]~~

Basis Discussion: The TCO skid equipment removes volatile organic compounds and NO_x from the offgas stream, and inject diluted anhydrous ammonia. Ammonia gas is injected to react with the oxides of nitrogen to reduce them to nitrogen gas and water. The ammonia dilution equipment is mounted on a skid and is in a dedicated room, separate from the TCO skid. The supply line is routed to the LVP ammonia/dilution skid where it is then combined with air supplied by transfer piping from a supply fan. The combined ammonia/air supply is then routed from the skid to the TCO. The confinement boundary for this SSC ends where the transfer piping enters the TCO unit.~~The AMR system piping and equipment will maintain primary confinement of the anhydrous ammonia. This requirement applies to the AMR system piping from the block/isolation valve where it enters the LAW building (on the roof) to where it joins with the LVP (melter offgas) system, including the ammonia dilution skid.~~

Verification: Verification is expected to be achieved through the following:

Verif. Method	Verif. By	Plan	Notes/Comments
~~A~~	~~ENG~~	~~Perform an analysis to verify the ability of the systems piping and equipment to confine the ammonia and withstand the effects of a design basis seismic event, during and after expected fire events, and during normal operations to confine ammonia.~~	
R	ENG	Review design to verify the piping between LVP-BLWS-00080 and the ammonia injection manifold is designed for negative pressure ≤ -7.2 psig.~~Review design to verify the alignment with the analysis.~~	

3.7.2.6 Ammonia Reagent System (LAW Facility AMR/LVP Piping)

Requirement: The LAW Facility AMR/LVP Piping shall maintain confinement under design basis pressures. The LAW Facility AMR/LVP Piping is designed for pressures equal to or less than 300 psig. [Sections 4.4.3.13.3, 4.4.3.13.4, Appendix A Table A-1, LAW-DSA]

Basis Discussion: The boundary limits for the AMR/LVP piping begin at the upstream flange of the isolation valve (AMR-V-40886 - located external to the LAW facility) on the ammonia pipeline exiting the ground at the southwest corner of the LAW Main Process building (24590-BOF-M6-AMR-00003001). The AMR/LVP piping and equipment will maintain primary confinement of the anhydrous ammonia. This requirement applies to the AMR system piping from the block/isolation valve where it enters the LAW building (on the roof) to where it joins with the LVP (melter offgas) system, including the ammonia dilution skid.

Verification: Verification is expected to be achieved through the following:

Verif. Method	Verif. By	Plan	Notes/Comments
R	ENG	Review design to verify the AMR/LVP piping is designed for pressures ≤ 300 psig.	

3.8.2.1 Offgas Exhauster ~~Fans – Normal Operation~~

Requirement: The offgas exhausters shall include:

- The offgas exhausters shall provide sufficient motive force to exhaust the melter offgas out the top of the stack under: minimum operating flow, normal operating flow, maximum operating flow, system reconfiguration conditions (e.g., loss of power, safety interlock actuation), and seismic-induced loss of power.
- The offgas exhausters shall provide the required differential pressure to maintain vacuum on each melter plenum, up to 155.7 in W.C. (between exhauster suction and discharge).
- The offgas exhausters shall provide required flow through the system, up to 2,822 scfm.
- At least two offgas exhausters are operable during Operations mode.

[Section 4.4.3.17.3, 4.4.3.17.4, Appendix A Table A-1, LAW-DSA] (A.8)~~The melter offgas system exhausters shall provide sufficient vacuum to provide continuous flow of the melter offgas from the melter to the exhaust stack during normal design basis conditions of temperature and pressure fluctuations. [Appendix C Table C4-1, LAW PDSA] (A.8)~~

Basis Discussion: The exhausters mitigate the consequences of a release of radioactive and chemically hazardous material by providing the motive force for an elevated release of melter offgas in the event normal offgas systems are bypassed, a fire in the carbon bed material releases additional hazardous material, or a failure causes excess hazardous material (ammonia, NO_x, SO_x) to be released.

[ALARA]

Verification: Verification is expected to be achieved through the following:

Verif. Method	Verif. By	Plan	Notes/Comments
A	**ENG**	Perform an analysis to determine sufficient motive force to exhaust the melter offgas out the top of the stack under: – minimum operating flow – normal operating flow – maximum operating flow – system reconfiguration conditions (e.g., loss of power, safety interlock actuation) – seismic-induced loss of power. The offgas exhausters maintain vacuum on each melter plenum, up to 155.7 in W.C. (between exhauster suction and discharge) with flow through the system, up to 2,822 scfm.~~the vacuum required to provide continuous flow of the melter offgas from the melter to the exhaust stack.~~	
R	**ENG**	Review design to verify the alignment with the analysis.	
R	**ENG**	Review design to verify that at least two offgas exhausters operate during Operations mode.	
T	**SU/COM**	Test the offgas exhauster to verify sufficient motive force to exhaust the melter offgas out the top of the stack under minimum operating flow.	

3.8.2.3 ~~Melter Offgas Exhausters (LVP) – Abnormal Operating Conditions~~Deleted

~~**Requirement:** The LVP offgas exhauster fans shall provide vacuum sufficient to keep the offgas system operating and provide flow to an elevated release for the duration of the cold cap burn off, as established by analysis, when actuated by the LVP Header High/Low Pressure or Loss of Power Interlocks. [Appendix C Table C4-1, LAW PDSA] (A.8)~~

~~**Basis Discussion:** The melter offgas exhausters mitigate the consequences of a release of radioactive and chemically hazardous material by providing the motive force for an elevated release of melter offgas in the event normal offgas systems are bypassed, a fire in the carbon bed material releases additional hazardous material, or a failure causes excess hazardous material (ammonia, NOx, SOx) to be released.~~

~~**Verification:** Verification is expected to be achieved through the following:~~

~~Verif. Method~~	~~Verif. By~~	~~Plan~~	~~Notes/Comments~~
~~**A**~~	~~**ENG**~~	~~Perform an analysis to determine the required vacuum.~~	
~~**R**~~	~~**ENG**~~	~~Review design to verify the alignment with the analysis.~~	

~~Verif. Method~~	~~Verif. By~~	~~Plan~~	~~Notes/Comments~~
~~T~~	~~SU/ COM~~	~~Perform a test to verify the required vacuum with the analysis.~~	

3.8.2.5 ~~Melter Offgas Confinement Boundary (Offgas Exhauster Backflow Prevention)~~Deleted

~~**Requirement:** The melter offgas confinement shall have melter offgas exhauster backflow prevention devices that prevent recirculation loops if an exhauster is not operating but has not been isolated. This design feature ensures that the melter offgas exhausters will direct melter flow to the exhaust stack. [Appendix C Table C4-1, LAW PDSA] (A.1)~~

~~**Basis Discussion:** The confinement boundary mitigates the release of radioactive and chemically hazardous material by providing a primary release pathway from the melter through the melter offgas system exhausters and to the stack exit.~~

~~**Verification:** Verification is expected to be achieved through the following:~~

~~Verif. Method~~	~~Verif. By~~	~~Plan~~	~~Notes/Comments~~
~~R~~	~~ENG~~	~~Review design to verifythere are backflow prevention devices install on the melter offgas exhausters.~~	
~~T~~	~~SU/ COM~~	~~Perform a test to verify the backflow prevention devices prevent a recirculation if an exhauster is not operating.~~	

3.8.2.6 ~~Melter Offgas Exhausters (LVP) – Seismic Design~~Deleted - Combined with 3.4.2.20

~~**Requirement:** The melter offgas system exhausters shall perform their function in seismic events of intensity up to and including the design basis earthquake. [Appendix C Table C4-1, LAW PDSA]~~

~~**Basis Discussion:** The exhausters mitigate the consequences of a release of radioactive and chemically hazardous material by providing the motive force for an elevated release of melter offgas in the event normal offgas systems are bypassed, a fire in the carbon bed material releases additional hazardous material, or a failure causes excess hazardous material (ammonia, NO_x, SO_x) to be released.~~

~~**Verification:** Verification is expected to be achieved through the following:~~

~~Verif. Method~~	~~Verif. By~~	~~Plan~~	~~Notes/Comments~~
~~A~~	~~ENG~~	~~Perform an analysis to determine the ability of the exhausters to perform in seismic events of intensity up to and including the design basis earthquake.~~	
~~R~~	~~ENG~~	~~Review design to verify alignment with analysis.~~	~~May be documented in assessment/evaluation report.~~

3.8.2.7 Offgas Exhauster Back-up Air to the Exhauster Shaft Purge Air Seals

Requirement: The backup air supply shall contain a sufficient air supply for the exhauster shaft seals to maintain confinement for the duration for the substantial cold cap burn off. The system shall have an air supply capacity equal to or exceeding 7.4 cubic feet. [Sections 4.4.4.1.21.3, 4.4.4.1.21.4, Appendix A Table A-1, LAW-DSA]~~The~~

~~backup air supply shall contain a sufficient air supply for the exhauster shaft seals to maintain confinement for the duration of substantial cold cap burn off. [Appendix C, Table C4-1, LAW PDSA]~~

Basis Discussion: This mitigates the release of radioactive and chemically hazardous material through the exhauster shaft seals by supplying back-up air pressure to the exhauster shaft seals. The flowrates used in the calculation that determined the air supply capacity (volume – ft^3) were calculated with standard conditions (SCFM).

[ALARA]

Verification: Verification is expected to be achieved through the following:

Verif. Method	Verif. By	Plan	Notes/Comments
A	**ENG**	Perform an analysis to determine the amount of back-up air ($\geq$ 7.4 ft^3) needed for the exhauster shaft purge air seals.	May be documented in assessment/evaluation report.
R	**ENG**	Review design to verify alignment with analysis.	May be documented in assessment/evaluation report.
T	**SU/ COM**	Test that the backup air supply of 7.4 ft^3 for the exhauster shaft seals will maintain confinement for the duration for the substantial cold cap burn off.	

3.8.2.8 Offgas Exhauster Back-up Air Surge Capacity

Requirement: The backup air supply shall contain sufficient surge capacity to maintain the shaft seal supply pressure. The system shall have a surge capacity equal to or exceeding 0.2 cubic feet. [Sections 4.4.4.1.20.3, 4.4.4.1.20.4, Appendix A Table A-1, LAW-DSA]

Basis Discussion: This mitigates the release of radioactive and chemically hazardous material through the exhauster shaft seals by supplying back-up air pressure to the exhauster shaft seals. The flowrates used in the calculation that determined the surge capacity (volume – ft^3) were calculated with standard conditions (SCFM).

[ALARA]

Verification: Verification is expected to be achieved through the following:

Verif. Method	Verif. By	Plan	Notes/Comments
A	**ENG**	Perform an analysis to determine the amount of back-up air surge capacity ($\geq$ 0.2 ft^3) needed to maintain the shaft seal supply pressure.	May be documented in assessment/evaluation report.
R	**ENG**	Review design to verify alignment with analysis.	May be documented in assessment/evaluation report.
T	**SU/ COM**	Test that the surge capacity of 0.2 ft^3 for the backup air supply will maintain the shaft seal supply pressure.	

3.9.2.1.3 Instrument and Interlock Seismic Design

Requirement: The LOP and LVP systems' instrument interlocks (sensing instrumentation to the final elements actuated by interlocks) shall meet SC-III requirements. Based on natural phenomena and confinement

considerations, the offgas system instrument interlocks listed in Table 3-4, shall be designed to meet SC-III requirements and perform their safety function under design basis seismic loads. [Safety Criterion 4.1-3, SRD][Sections 4.4.3.15.3, 4.4.3.15.4, 4.4.4.1.1.3, 4.4.4.1.1.4, 4.4.4.1.4.3, 4.4.4.1.4.4, 4.4.4.1.5.3, 4.4.4.1.5.4, 4.4.4.1.6.3, 4.4.4.1.6.4, 4.4.4.1.7.3, 4.4.4.1.7.4, 4.4.4.1.8.3, 4.4.4.1.8.4, 4.4.4.1.9.3, 4.4.4.1.9.4, 4.4.4.1.10.3, 4.4.4.1.10.4, 4.4.4.1.11.3, 4.4.4.1.11.4, 4.4.4.1.12.3, 4.4.4.1.12.4, 4.4.4.1.13.3, 4.4.4.1.13.4, 4.4.4.1.15.3, 4.4.4.1.15.4, 4.4.4.1.16.3, 4.4.4.1.16.4, 4.4.4.1.17.3, 4.4.4.1.17.4, 4.4.4.1.18.3, 4.4.4.1.18.4, 4.4.4.1.19.3, 4.4.4.1.19.4, 4.4.4.1.20.3, 4.4.4.1.20.4, 4.4.4.1.21.3, 4.4.4.1.21.4, 4.4.4.1.22.3, 4.4.4.1.22.4, Appendix A Table A-1, LAW-DSA]
~~Instrument interlock components shall perform the functions in seismic events of intensity up to and including the design basis earthquake~~.

Table 3-4 Instruments, Valves and Interlock Requiring Seismic Functionality

Interlock	Seismic Category	Reference
Primary/Standby Film Cooler Low Flow Interlock~~Film Cooler Outlet High Temperature Interlock~~	SC-III	Sections 4.4.4.1.4.3, 4.4.4.1.4.4, Appendix A Table A-1, LAW-DSA~~[Appendix C Table C4-1, LAW PDSA]~~
SBS Low Level Interlocks (hydraulic seal function)	SC-III	Sections 4.4.4.1.5.3, 4.4.4.1.5.4, Appendix A Table A-1, LAW-DSA~~[Appendix C Table C4-1, LAW PDSA]~~
SBS High Level Interlock	SC-III	Sections 4.4.4.1.6.3, 4.4.4.1.6.4, Appendix A Table A-1, LAW-DSA~~[Appendix C Table C4-1, LAW PDSA]~~
WESP High Level Interlock	SC-III	Sections 4.4.4.1.7.3, 4.4.4.1.7.4, Appendix A Table A-1, LAW-DSA~~[Appendix C Table C4-1, LAW PDSA]~~
Offgas HEPA Preheater High Temperature Interlock~~HEPA Preheater Outlet High Temperature Interlock~~	SC-III	Sections 4.4.4.1.8.3, 4.4.4.1.8.4, Appendix A Table A-1, LAW-DSA~~[Appendix C Table C4-1, LAW PDSA]~~
~~LVP~~ Offgas Header High~~/~~ and Low Pressure Interlocks	SC-III	Sections 4.4.4.1.9.3, 4.4.4.1.9.4, 4.4.4.1.10.3, 4.4.4.1.10.4, Appendix A Table A-1, LAW-DSA~~[Appendix C Table C4-1, LAW PDSA]~~
TCO Heater High Temperature Interlock	SC-III	Sections 4.4.4.1.12.3, 4.4.4.1.12.4, Appendix A Table A-1, LAW-DSA
TCO Skid ~~Outlet~~ High Temperature Interlock	SC-III	Sections 4.4.4.1.13.3, 4.4.4.1.13.4, Appendix A Table A-1, LAW-DSA~~[Appendix C Table C4-1, LAW PDSA]~~
Caustic Scrubber ~~Low~~ Recirculation Low Pressure Interlock	SC-III	Sections 4.4.4.1.17.3, Section 4.4.4.1.17.4, Appendix A Table A-1, LAW-DSA~~[Appendix C Table C4-1, LAW PDSA]~~

Interlock	Seismic Category	Reference
Caustic Scrubber Recirculation Low Flow ~~Loss of Cooling~~ Interlock	SC-III	Sections 4.4.4.1.18.3, 4.4.4.1.18.4, Appendix A Table A-1, LAW-DSA~~[Appendix C Table C4-1, LAW PDSA]~~
Caustic Scrubber ~~Low Water Supply~~Process Water Supply Low Pressure Interlock	SC-III	Sections 4.4.4.1.19.3, 4.4.4.1.19.4, Appendix A Table A-1, LAW-DSA~~[Appendix C Table C4-1, LAW PDSA]~~
Offgas Exhauster 1A/1B/1C Shaft Seal Air Supply Low Pressure Interlock (including backup air supply)	SC-III	Sections 4.4.4.1.21.3, 4.4.4.1.21.4, Appendix A Table A-1, LAW-DSA~~[Appendix C Table C4-1, LAW PDSA]~~
Offgas Exhauster 1A/1B/1C Shaft Seal Low Pressure Interlock (including backup air supply)	SC-III	Sections 4.4.4.1.20.3, 4.4.4.1.20.4, Appendix A Table A-1, LAW-DSA~~[Appendix C Table C4-1, LAW PDSA]~~
~~Vacuum Breaker~~		~~[Appendix C Table C4-1, LAW PDSA]~~
~~Analyzer Room High Temperature Interlock~~		~~[Appendix C Table C4-1, LAW PDSA]~~
Melter Plenum High Pressure Interlock (LMP)	SC-III	Sections 4.4.4.1.1.3, 4.4.4.1.1.4, Appendix A Table A-1, LAW-DSA~~[Appendix C Table C4-1, LAW PDSA]~~
Loss of Normal Power to Safety Equipment Interlock ~~Loss of Normal Power Interlock~~ (UPE)	SC-III	Sections 4.4.4.1.22.3, 4.4.4.1.22.4, Appendix A Table A-1, LAW-DSA~~[Appendix C Table C4-1, LAW PDSA]~~
Pneumatic Permissive	SC-III	Sections 4.4.3.15.3, 4.4.3.15.4, Appendix A Table A-1, LAW-DSA
Carbon Bed High Differential CO Concentration Interlock	SC-III	Sections 4.4.4.1.11.3, 4.4.4.1.11.4, Appendix A Table A-1, LAW-DSA
Ammonia High Flow Interlock	SC-III	Sections 4.4.4.1.15.3, 4.4.4.1.15.4, Appendix A Table A-1, LAW-DSA
Ammonia Dilution Air Low Flow Interlock	SC-III	Sections 4.4.4.1.16.3, 4.4.4.1.16.4, Appendix A Table A-1, LAW-DSA

Basis Discussion: The seismic requirement reduces the probability of a release of radioactive and chemically hazardous material by insuring the functionality during the seismic events.

Verification: Verification is expected to be achieved through the following:

Verif. Method	Verif. By	Plan	Notes/Comments
A	**ENG**	Perform an analysis to verify the ability of the interlock to perform in seismic events of intensity up to and including the design basis earthquake.	
R	**ENG**	Review design to verify alignment with analysis.	May be documented in assessment/evaluation report.

3.9.2.2.1 Primary/Standby Film Cooler~~s~~ Low Flow (High Outlet Temperature) Interlock

Requirement: Upon detection of primary or standby film cooler injection air low flow (Melter 1 Primary - LOP-FT-1408/1409, Melter 1 Standby - LOP-FT-1410/1411, Melter 2 Primary - LOP-FT-2408/2409, Melter 2 Standby - LOP-FT-2410/2411), the interlock shall initiate film cooler emergency cooling to the affected melter by opening the appropriate valves (final elements listed below). The interlock shall ensure sources of air to the affected film coolers are open to prevent offgas piping (from film cooler through the SBS downcomer) temperatures from exceeding 1112 °F.

- Melter 1:
  - Standby offgas line valve (LOP-YV-1008)
  - Primary offgas film cooler inbleed (LOP-YV-1401/1407)
  - Standby offgas film cooler inbleed (LOP-YV-1402/1406)
- Melter 2:
  - Standby offgas line valve (LOP-YV-2008)
  - Primary offgas film cooler inbleed (LOP-YV-2401/2407)
  - Standby offgas film cooler inbleed (LOP-YV-2402/2406)

[Sections 4.4.4.1.4.3, 4.4.4.1.4.4, Appendix A Table A-1, LAW-DSA] (D.2)

~~The film cooler outlet high temperature interlock shall monitor the cooler supply airflow and upon detection of low film cooler airflow supply shall take the following actions:~~

- ~~Open the melter offgas emergency air inbleeds on the primary and standby film coolers for the affected melter.~~
- ~~Open the associated bypass valve from the standby film cooler to the SBS.~~

~~[Appendix C, Table C4-1, LAW PDSA] (D.2)~~

Basis Discussion: The interlock reduces the probability of a release of radioactive and chemically hazardous material by preventing a failure of the offgas system confinement boundary caused by high offgas temperatures due to low film cooler air supply.

The film cooler high temperature interlock monitors the film cooler airflow to ensure adequate cooling air flow, thereby preventing the temperature of the offgases from increasing to the point of confinement boundary failure.

Verification: Verification is expected to be achieved through the following:

Verif. Method	Verif. By	Plan	Notes/Comments
A	**ENG**	Perform an analysis to determine the low film cooler supply airflow setpoint that prevent offgas piping (from film cooler through the SBS downcomer) temperatures from exceeding 1112 °F~~could result in a breach of the melter offgas confinement boundary~~.	May be documented in assessment/evaluation report. The setpoint calculation (24590-LAW-J3C-PPJ-00018) protects the analytical limit to account for instrument uncertainties, resulting in a limiting trip setpoint (LTSP) to activate the interlock to open air inbleed valves to the affected film coolers at 147.3 ACFM (primary cooler) and 7.5 ACFM (standby cooler) prevent offgas piping temperatures from exceeding 1112 °F.
R	**ENG**	Review design to verify there are interlock instruments and components that: • Monitor the cooling airflow and initiate the interlock. • Open the melter offgas emergency air inbleeds on the primary and standby film coolers for the affected melter. • Open the associated bypass valve from the standby film cooler to the SBS.	
T	**SU/ COM**	Perform a test to verify the interlock: • Monitors the cooling airflow and initiates the interlock • Opens the melter offgas emergency air inbleeds on the primary and standby film coolers for the affected melter. • Opens the associated bypass valve from the standby film cooler to the SBS.	

3.9.2.2.1.1 Failed Primary/Standby Film Cooler Low Flow Interlocked Components (failed final control SIS elements)

Requirement: The interlocked components that can fail in a manner that causes a release shall fail to a safe position on loss of control signal or air. The PPJ melter standby film cooler isolation valve (Melter 1 - LOP-YV-1008, Melter 2 - LOP-YV-2008) shall be designed to fail in an open position on loss of control signal or loss of air to the valve. The PPJ melter 1 and 2 primary film cooler emergency air inbleed valve (Melter 1 - LOP-YV-1401/1407, Melter 2 - LOP-YV-2401/2407) shall be designed to fail in an open position on loss of control signal or loss of air to the valve. The PPJ melter standby film cooler emergency air inbleed valve (Melter 1 - LOP-YV-1402/1406, Melter 2 - LOP-YV-2402/2406) shall be designed to fail in an open position on loss of control signal or loss of air to the valve. [Sections 4.4.4.1.4.3, 4.4.4.1.4.4, Appendix A Table A-1, LAW-DSA]

Basis Discussion: By preventing the final control elements of the SIS from failing in a manner that would cause a release, the failure position of these components reduces the probability of a release of radioactive and chemically hazardous material.

Verification: Verification is expected to be achieved through the following:

Verif. Method	Verif. By	Plan	Notes/Comments
R	ENG	Review the design for incorporation of the failure position on loss of control signal or air to the valve (s): • melter standby film cooler isolation valve - fails in an OPEN position • melter 1 and 2 primary film cooler emergency air inbleed valves - fail in an OPEN position • melter standby film cooler emergency air inbleed valves - fail in an OPEN position	
T	SU/ COM	Perform a test to verify the failure position on loss (or simulated loss) of control signal or air to the valve (s): • melter standby film cooler isolation valve - fails in an OPEN position • melter 1 and 2 primary film cooler emergency air inbleed valves - fail in an OPEN position • melter standby film cooler emergency air inbleed valves - fail in an OPEN position	

3.9.2.2.2 Wet Electrostatic Precipitator (WESP) High Level Interlock

Requirement: Upon detection of a high WESP water level (Melter 1 - LOP-LT-1059, Melter 2 - LOP-LT-2059), the interlock shall reduce the rate of increase in affected WESP water level by closing the WESP Water Supply Valves (Melter 1 - LOP-YV-1061, Melter 2 - LOP- YV-2061). The interlock shall isolate DIW sources to prevent the WESP water level from exceeding the bottom of the offgas inlet nozzle (18.5 inches above the bottom head-to-vessel weld line). [Sections 4.4.4.1.7.3, 4.4.4.1.7.4, Appendix A Table A-1, LAW-DSA] (D.2)

~~The WESP high level interlock shall monitor liquid level in the WESP and upon detection of high WESP liquid level, the interlock shall isolate the demineralized water supply to the WESP. [Appendix C Table C4-1, LAW PDSA] (D.2)~~

Basis Discussion: The WESP demineralized water flush valve closes to shut off demineralized flush water to the WESP to prevent WESP flooding that can restrict flow of the offgas melter line, resulting in a melter offgas release event.

Verification: Verification is expected to be achieved through the following:

Verif. Method	Verif. By	Plan	Notes/Comments
A	ENG	Perform an analysis to determine the setpoint (<18.5 inches above the bottom head-to-vessel weld line) for high WESP liquid level interlock.	24590-LAW-J3C-PPJ-00002, Rev. B, states in Section 2.6.7, the lowest measured level (0 inches) corresponds to 5.5625 inches above the bottom WESP head-to-vessel weld line. 18.5 inches above the bottom head-to-vessel weld line is considered the Deisgn Limit in the calculation. The difference is 12.93 inches.
R	ENG	Review design to verify there are interlock instruments and components that:	

Verif. Method	Verif. By	Plan	Notes/Comments
		• Monitor the WESP liquid level and initiates the interlock. • Isolate the demineralization water supply to the WESP.	
T	**SU/ COM**	Perform a test to verify the interlock: • Monitors the WESP liquid level and initiates the interlock. • Isolates the demineralization water supply to the WESP.	

3.9.2.2.2.1 Failed WESP High Level Interlocked Components (failed final control SIS elements)

Requirement: Interlocked components that can fail in a manner that causes a release shall fail to a safe position on loss of control signal or air. The PPJ WESP water addition supply valve (Melter 1 - LOP-YV-1061, Melter 2 - LOP- YV-2061) is designed to fail in a closed position on loss of control signal or loss of air to the valve. [Sections 4.4.4.1.7.3, 4.4.4.1.7.4, Appendix A Table A-1, LAW-DSA]

Basis Discussion: By preventing the final control elements of the SIS from failing in a manner that would cause a release, the failure position of these components reduces the probability of a release of radioactive and chemically hazardous material.

Verification: Verification is expected to be achieved through the following:

Verif. Method	Verif. By	Plan	Notes/Comments
R	**ENG**	Review the design for incorporation of the failure position on loss of control signal or air to the valve (s): • PPJ WESP water addition supply valve - fails in a CLOSED position	
T	**SU/ COM**	Perform a test to verify the failure position on loss (or simulated loss) of control signal or air to the valve (s): • PPJ WESP water addition supply valve - fails in a CLOSED position	

3.9.2.2.3 SBS High Level Interlock

3.9.2.2.3.1 SBS High Level Interlock (Terminate Sources of Water)

Requirement: Upon detection of high SBS water level (Melter 1 - LOP-LT-1011, Melter 2 - LOP-LT-2011), the interlock shall reduce the rate of increase in SBS water level by closing the demineralized water and ADS water supply valves (final elements listed below). The interlock shall terminate sources of water if the water level in LOP-SCB-00001/00002 exceeds greater than or equal to 34.94 in. above the discharge of the downcomer (69.94 in. above the vessel tangent).

- Melter 1:
  - Demin. water to LOP-BULGE-00001 (LOP-YV-1148)
  - Demin. water to LOP-PMP-00001/00002 (LOP-YV-1156/1157)
  - ADS water supply valves (LFP-YV-1207/1211)
- Melter 2:

- o Demin. water to LOP-BULGE-00002 (LOP-YV-2148)
- o Demin. water to LOP-PMP-00004/00005 (LOP-YV-2156/2157)
- o ADS water supply valves (LFP-YV-2207/2211)

[Sections 4.4.4.1.6.3, 4.4.4.1.6.4, Appendix A Table A-1, LAW-DSA] (D.2)
~~The SBS high level interlock shall monitor SBS liquid level and upon detection of high SBS liquid level, the interlock shall isolate the demineralized water being supplied to the associated process cell valve bulge and the associated SBS condensate purge pump priming lines. [Appendix C Table C4-1, LAW PDSA] (D.2)~~

Basis Discussion: The interlock reduces the probability of a release of radioactive and chemically hazardous material by preventing a blockage of the offgas system at the SBS caused by high SBS liquid levels.

Verification: Verification is expected to be achieved through the following:

Verif. Method	Verif. By	Plan	Notes/Comments
A	**ENG**	Perform an analysis to determine the setpoint (<34.94 inches above the discharge of the downcomer (69.94 inches above the vessel tangent line)) for high SBS liquid level interlock.	
R	**ENG**	Review design to verify there are interlock instruments and components that: • Monitor the SBS liquid level and initiate the interlock. • Isolate the demineralized water being supplied to the associated process cell valve bulge and the associated SBS condensate purge pump priming lines.	
T	**SU/ COM**	Perform a test to verify the interlock: • Monitors the SBS Liquid level and initiates the interlock. • Isolates the demineralized water being supplied to the associated process cell valve bulge and the associated SBS condensate purge pump priming lines.	

3.9.2.2.3.2 SBS High Level Interlock (Terminate Air Supply)

Requirement: Upon detection of high SBS water level (Melter 1 - LOP-LT-1011, Melter 2 - LOP-LT-2011), the interlock shall terminate feed to the affected melter by closing the ADS pump air valves (Melter 1 - LFP-YV-1208/1212, Melter 2 - LFP-YV-2208/2212). The interlock shall terminate ADS pump air supply upon a water level in LOP-SCB-00001/00002 exceeds greater than or equal to 34.94 in. above the discharge of the downcomer (69.94 in. above the vessel tangent line). [Sections 4.4.4.1.6.3, 4.4.4.1.6.4, Appendix A Table A-1, LAW-DSA] (D.2)

Basis Discussion: The interlock reduces the probability of a release of radioactive and chemically hazardous material by preventing a blockage of the offgas system at the SBS caused by high SBS liquid levels.

Verification: Verification is expected to be achieved through the following:

Verif. Method	Verif. By	Plan	Notes/Comments
A	ENG	Perform an analysis to determine the setpoint (<34.94 inches above the discharge of the downcomer (69.94 inches above the vessel tangent line)) for high SBS liquid level interlock.	
R	ENG	Review design to verify there are interlock instruments and components that: • Monitor the SBS liquid level and initiate the interlock. • Isolate the feed pump plant air supply valve	
T	SU/ COM	Perform a test to verify the interlock: • Monitors the SBS Liquid level and initiates the interlock. • Isolates the feed pump plant air supply valve	

3.9.2.2.3.3 Failed SBS High Level Interlocked Components (failed final control SIS elements)

Requirement: The interlocked components that can fail in a manner that causes a release shall fail to a safe position on loss of control signal or air. The PPJ melter SBS condensate bulge flush supply valve (Melter 1 - LOP-YV-1148, Melter 2 - LOP-YV-2148) shall be designed to fail in a closed position on loss of control signal or loss of air to the valve. The PPJ melter SBS condensate recirculation pump priming valve (Melter 1 - LOP-YV-1156/1157, Melter 2 - LOP-YV-2156/2157) shall be designed to fail in a closed position on loss of control signal or loss of air to the valve. [Sections 4.4.4.1.6.3, 4.4.4.1.6.4, Appendix A Table A-1, LAW-DSA]

Basis Discussion: By preventing the final control elements of the SIS from failing in a manner that would cause a release, the failure position of these components reduces the probability of a release of radioactive and chemically hazardous material.

Verification: Verification is expected to be achieved through the following:

Verif. Method	Verif. By	Plan	Notes/Comments
R	ENG	Review the design for incorporation of the failure position on loss of control signal or air to the valve (s): • melter SBS condensate bulge flush supply valve - fails in a CLOSED position • melter SBS condensate recirculation pump priming valves - fail in a CLOSED position	
T	SU/ COM	Perform a test to verify the failure position on loss (or simulated loss) of control signal or air to the valve (s): • melter SBS condensate bulge flush supply valve - fails in a CLOSED position • melter SBS condensate recirculation pump priming valves - fail in a CLOSED position	

3.9.2.2.4 SBS Low Level Interlock

3.9.2.2.4.1 SBS Low Level Interlock (Limit Offgas Generation)

Requirement: Upon detection of low SBS level (Melter 1 - LOP-LT-1011, Melter 2 - LOP-LT-2011), the interlock shall limit offgas generation from both melters by closing the ADS valves (Melter 1 - LFP-YV-1208/1212, Melter 2 - LFP-YV-2208/2212). The interlock shall terminate melter feed and limit the offgas generation if the SBS liquid level decreases to less than or equal to 24.64 in. above the discharge of the downcomer (59.64 in. above the vessel tangent) for 2 hr substantial cold cap burnoff duration. [Sections 4.4.4.1.5.3, 4.4.4.1.5.4, Appendix A Table A-1, LAW-DSA] (D.2)

~~The SBS low level interlock shall monitor the SBS liquid level and upon detection of a low liquid level in the SBS vessels, the following actions shall occur:~~

- ~~Isolate power to the SBS water purge pumps.~~
- ~~Stops air flow to the air displacement slurry (ADS) pumps for both melters. (LFP/LCP)~~

~~[Appendix C Table C4-1, 5.5.2, LAW PDSA] (D.2)~~

Basis Discussion: The interlock reduces the probability of a release of radioactive and chemically hazardous material by preventing a failure of the offgas system confinement boundary caused by high offgas temperatures.

The interlock limits the release of radioactive and chemically hazardous material ensuring offgas cannot flow through the SBS liquid barrier and cause a failure of the offgas exhaust system. This ensures the SBS has sufficient liquid to cool and quench the melter offgas as well as sufficient level to protect the melter from experiencing excessive vacuum.

Verification: Verification is expected to be achieved through the following:

Verif. Method	Verif. By	Plan	Notes/Comments
A	**ENG**	Perform an analysis to determine the SBS low level setpoint ≥ 24.64 inches above the discharge of the downcomer (59.64 inches above the vessel tangent).	
R	**ENG**	Review design to verify there are interlock instruments and components that: • Monitor the SBS Liquid Level and initiate the interlock. • ~~Isolates power to the SBS water purge pumps.~~ • Stop air to the ADS pumps for the melter. (LFP).	
T	**SU/ COM**	Perform a test to verify the interlock: • Monitor the SBS Liquid Level and initiate the interlock. • ~~Isolates power to the SBS water purge pumps.~~ • Stop air to the ADS pumps for the melter. (LFP).	

3.9.2.2.4.2 SBS Low Level Interlock (Maintain Primary Pathway)

Requirement: Upon detection of low SBS level (Melter 1 - LOP-LT-1011, Melter 2 - LOP-LT-2011), the interlock, to maintain downstream melter offgas system primary pathway temperatures within design basis range, shall terminate transfers out of the affected SBS by electrical isolation of the SBS purge water pumps (Melter 1 - LOP-CTR-20003A/20003B, Melter 2 - LOP-CTR-20006A/20006B). The interlock shall terminate transfers out of the affected SBS by turning off the SBS water purge pumps if the SBS liquid level decreases to less than or equal

to 24.64 in. above the discharge of the downcomer (59.64 in. above the vessel tangent) for a 2 hr substantial cold cap burnoff duration. [Sections 4.4.4.1.5.3, 4.4.4.1.5.4, Appendix A Table A-1, LAW-DSA] (D.2)

Basis Discussion: The interlock reduces the probability of a release of radioactive and chemically hazardous material by preventing a failure of the offgas system confinement boundary caused by high offgas temperatures by providing a hydraulic seal to isolate offgas flow from the melter to beyond the SBS upon loss of system vacuum.

The interlock limits the release of radioactive and chemically hazardous material ensuring offgas cannot flow through the SBS liquid barrier and cause a failure of the offgas exhaust system. This ensures the SBS has sufficient liquid to cool and quench the melter offgas as well as sufficient level to protect the melter from experiencing excessive vacuum.

Verification: Verification is expected to be achieved through the following:

Verif. Method	Verif. By	Plan	Notes/Comments
A	ENG	Perform an analysis to determine the SBS low level setpoint ≥ 24.64 inches above the discharge of the downcomer (59.64 inches above the vessel tangent).	
R	ENG	Review design to verify there are interlock instruments and components that: • Monitor the SBS Liquid Level and initiate the interlock. • Isolates power to the SBS water purge pumps.	
T	SU/ COM	Perform a test to verify the interlock: • Monitor the SBS Liquid Level and initiate the interlock. • Isolates power to the SBS water purge pumps.	

3.9.2.3 LVP High-Efficiency Particulate Air Filter Interlocks

3.9.2.3.1 Offgas HEPA Preheaters ~~Outlet~~ High Temperature Interlock

3.9.2.3.1.1 Offgas HEPA Preheaters High Temperature Interlock (Maintain Primary Pathways)

Requirement: Upon detection of high offgas temperature (LVP-TT-0136/0137), the interlock shall maintain downstream melter offgas system primary pathway temperatures within design basis range by de-energizing the preheaters (LVP-CTR-00001A/00003A). The interlock shall terminate power to the LVP HEPA filter preheaters (LVP-CTR-00001A/00003A) to prevent the HEPA filter housing (limiting SSC) temperature from exceeding 192 °F. To protect this design limit, the interlock shall actuate to place the LVP HEPA filter preheaters (LVP-CTR-00001A/00003A) in their safe state/open position if the HEPA filter housing temperature reaches 185 °F. (24590-LAW-M6C-LVP-00012, *Analytical Limit for the Offgas HEPA Preheater High Temperature Interlock*). [Sections 4.4.4.1.8.3, 4.4.4.1.8.4, Appendix A Table A-1, LAW-DSA] (D.2)

~~The HEPA preheaters outlet high temperature interlock shall monitor temperatures downstream of the HEPA filter pre-heater. Upon detection of high offgas temperatures downstream of the HEPA filter pre-heaters, the following actions shall occur:~~

- ~~Isolate power to the HEPA filter preheater non-safety heating elements.~~
- ~~Open the bypass valve to bypass the mercury mitigation skid.~~

- ~~After a sufficient time period of opening the bypass valve, the interlock shall close the mercury mitigation skid inlet valves.~~

~~[Appendix C Table C4-1, LAW PDSA] (D.2)~~

Basis Discussion: The interlock reduces the probability of a release of radioactive and chemically hazardous material, by preventing a failure of the offgas confinement boundary or an ignition of carbon bed media caused by high offgas temperatures.

Verification: Verification is expected to be achieved through the following:

Verif. Method	Verif. By	Plan	Notes/Comments
A	**ENG**	Perform an analysis to determine the HEPA preheaters outlet high temperature setpoint (HEPA filter housing temperature reaches 185 °F).	May be documented in assessment/evaluation report.
~~**A**~~	~~**ENG**~~	~~Perform an analysis to determine the "sufficient time period" to close the mercury mitigation skid inlet valves.~~	~~May be documented in assessment/evaluation report.~~
R	**ENG**	Review design to verify there are interlock instruments and components that: • Monitor temperatures downstream of the HEPA filter pre-heaters and initiate the interlock. • Isolate power to the HEPA filter preheater non-safety heating elements. ~~• Open the bypass valve to bypass the mercury mitigation skid.~~ ~~After a sufficient time period of opening the bypass valve, closes the mercury mitigation skid inlet valves.~~	
T	**SU/ COM**	Perform a test to verify the interlock; • Monitors temperatures downstream of the HEPA filter pre-heaters and initiates the interlock. • Isolates power to the HEPA filter preheater non-safety heating elements. ~~• Opens the bypass valve to bypass the mercury mitigation skid.~~ ~~After a sufficient time period of opening the bypass valve, closes the mercury mitigation skid inlet valves.~~	

3.9.2.3.1.2 Offgas HEPA Preheaters High Temperature Interlock (Prevent Autoignition Temperatures)

Requirement: Upon detection of high HEPA preheater outlet temperature (LVP-TT-0136/0137), the interlock shall shut the carbon bed inlet valves (LVP-YV-0407/0415/0449) prior to reaching the autoignition temperature of the carbon bed media. The interlock shall close the carbon bed inlet isolation valves (LVP-YV-0407/0415/0449) to prevent the carbon bed inlet temperature from exceeding 338 °F. [Sections 4.4.4.1.8.3, 4.4.4.1.8.4, Appendix A Table A-1, LAW-DSA] (D.2)

Basis Discussion: The interlock reduces the probability of a release of radioactive and chemically hazardous material, by preventing a failure of the offgas confinement boundary or an ignition of carbon bed media caused by high offgas temperatures.

Verification: Verification is expected to be achieved through the following:

Verif. Method	Verif. By	Plan	Notes/Comments
R	ENG	Review design to verify there are interlock instruments and components that: • Monitor temperatures downstream of the HEPA filter pre-heaters and initiate the interlock. • Close the mercury mitigation skid inlet valves closure prior to the carbon bed inlet temperature exceeding 338°F.	
T	SU/ COM	Perform a test to verify the interlock; • Monitors temperatures downstream of the HEPA filter pre-heaters and initiates the interlock. • Close the mercury mitigation skid inlet valves closure prior to the carbon bed inlet temperature exceeding 338°F.	

3.9.2.3.1.3 Failed Offgas HEPA Preheaters High Temperature Interlocked Components (failed final control SIS elements)

Requirement: The interlocked components that can fail in a manner that causes a release shall fail to a safe position on loss of control signal or air. The offgas HEPA preheater (LVP-HTR-00001A/00003A) shall be designed to fail in an off position on loss of control signal to the preheater. The PPJ carbon bed adsorber bypass valve (LVP-YV-0403) shall be designed to fail in an open position on loss of control signal or loss of air to the valve. [Sections 4.4.4.1.8.3, 4.4.4.1.8.4, Appendix A Table A-1, LAW-DSA]

Basis Discussion: By preventing the final control elements of the SIS from failing in a manner that would cause a release, the failure position of these components reduces the probability of a release of radioactive and chemically hazardous material.

Verification: Verification is expected to be achieved through the following:

Verif. Method	Verif. By	Plan	Notes/Comments
R	ENG	Review the design for incorporation of the failure position on loss of control signal, air, or power to the follow: • Offgas HEPA preheaters - fail in an OFF position • PPJ carbon bed adsorber bypass valve - fails in an OPEN position	
T	SU/ COM	Perform a test to verify the failure position on loss (or simulated loss) of control signal, air, or power to the follow: • Offgas HEPA preheaters - fail in an OFF position • Carbon bed adsorber bypass valve - fails in an OPEN position	

3.9.2.4.3 Carbon Bed High Differential CO Concentration Interlock~~Melter Offgas System (High Differential CO Interlock)~~

Requirement: Upon detection of high differential CO concentrations (Inlet: LVP-AT-0405/0406; Outlet: LVP-AT-0424/0425) the interlock shall isolate and bypass the carbon beds (final elements listed below). The interlock shall open the carbon bed bypass valve and shut the carbon bed inlet valves when the differential CO concentration of ≥ 454 ppm. The total time to acquire a gas sample and close the inlet valve shall be ≤310 seconds.

- Open the carbon bed bypass valve (LVP-YV-0403)
- Shut the carbon bed inlet valves (LVP-YV-0407/0415/0449).

[Sections 4.4.4.1.11.3, 4.4.4.1.11.4, Appendix A Table A-1, LAW-DSA] (D.2)
~~The melter offgas system high differential CO interlock shall detect mercury mitigation skid inlet and outlet CO concentrations. Upon detection of high CO differential concentrations, the following actions shall occur:~~

~~Open the carbon-bed bypass valve.~~

~~After opening the carbon-bed bypass valve, close the mercury mitigation skid inlet valves.~~

~~[Appendix C Table C4-1, LAW PDSA] (D.2)~~

Basis Discussion: The interlock and associated support systems mitigate the release of chemically hazardous material in the event of a fire by detecting incipient mercury mitigation skid fire conditions and limiting oxygen flow to the carbon bed, thereby reducing the fire energy and the release rate. The carbon bed inlet valves (LVP-YV-0407, LVP-YV-0415, LVP-YV-0449) cannot initiate closure before the carbon bed adsorber bypass valve has initiated opening (LVP-YV-0403) due to the pneumatic permissive

Verification: Verification is expected to be achieved through the following:

Verif. Method	Verif. By	Plan	Notes/Comments
A	**ENG**	Perform an analysis to determine the CO level (≥ 454 ppm) that is indicative of a carbon bed fire	May be documented in assessment/evaluation report.
R	**ENG**	Review design to verify there are interlock instruments and components that: • The total time to acquire a gas sample and close the inlet valve is ≤310 seconds • Detect mercury mitigation skid inlet and outlet CO concentrations and initiate the interlock. • Open the carbon-bed bypass valve. • After opening the carbon-bed bypass valve, close the mercury mitigation skid inlet valves.	
T	**SU/ COM**	Perform a test to verify the interlock: • The total time to acquire a gas sample and close the inlet valve is ≤310 seconds • Detects mercury mitigation skid inlet and outlet CO concentrations and initiates the interlock. • Opens the carbon-bed bypass valve. • After opening the carbon-bed bypass valve, closes the mercury mitigation skid inlet valves.	

3.9.2.4.3.1 Failed Carbon Bed High Differential CO Concentration Interlocked Components (failed final control SIS elements)

Requirement: The interlocked components that can fail in a manner that causes a release shall fail to a safe position on loss of control signal or air. The PPJ carbon bed adsorber bypass valve (LVP-YV-0403) shall be designed to fail in an open position on loss of control signal or loss of air to the valve. [Sections 4.4.4.1.11.3, 4.4.4.1.11.4, Appendix A Table A-1, LAW-DSA]

Basis Discussion: By preventing the final control elements of the SIS from failing in a manner that would cause a release, the failure position of these components reduces the probability of a release of radioactive and chemically hazardous material.

Verification: Verification is expected to be achieved through the following:

Verif. Method	Verif. By	Plan	Notes/Comments
R	ENG	Review the design for incorporation of the failure position on loss of control signal or air to the follow: • Carbon bed adsorber bypass valve - fails in an OPEN position	
T	SU/ COM	Perform a test to verify the failure position on loss (or simulated loss) of control signal or air to the follow: • Carbon bed adsorber bypass valve - fails in an OPEN position	

3.9.2.5 Selective Catalytic Oxidizer/Reducer Interlocks

3.9.2.5.1 Deleted

3.9.2.5.2 TCO Heater High Temperature Interlock~~Catalytic Oxidizer/Reducer Skid Heater Interlock~~

Requirement: Upon detection of high heater temperature (LVP-TE-0509/0516, LVP-TT-0509/0516), the interlock shall isolate power to the SCO/SCR skid electric heater (LVP-CTR-00002). The interlock shall isolate power to LVP-HTR-00002 before the offgas system primary pathway confinement boundary temperature reaches 805 °F. [Sections 4.4.4.1.12.3, 4.4.4.1.12.4, Appendix A Table A-1, LAW-DSA] (D.2)~~A temperature monitor downstream of the catalytic oxidizer/reducer skid heater shall be provided to detect high temperatures. Upon detection of high temperature, the interlock shall cut off the catalytic oxidizer/reducer skid heater. [Sections 4.4.14.1, 4.4.14.3, LAW PDSA] (D.2)~~

Basis Discussion: The melter offgas system maintains a continuous flow from the melter to the exhaust stack, which ensures that melter offgases are not released to normally occupied areas of the LAW Facility whenever a melter has a cold cap. The analysis relies on this flow to prevent exposure of the facility worker to nitrogen oxide (NO_x) gases, and to direct releases to the exhaust stack to achieve an elevated release and decrease the exposure to the co-located worker to acceptable levels. The catalytic oxidizer/reducer skid heater interlock prevents excessive temperatures that could result in a breach of the melter offgas confinement boundary and a subsequent melter offgas release event. This interlock and associated detection instrumentation detects high heater temperatures and cuts off the heater before excessive temperatures are reached.

Verification: Verification is expected to be achieved through the following:

Verif. Method	Verif. By	Plan	Notes/Comments
A	**ENG**	Perform an analysis to determine the high temperature limit (< 805 °F) to prevent a breach of the melter offgas confinement boundary.	May be documented in assessment/evaluation report.
R	**ENG**	Review design to verify there are interlock instruments and components that: • Monitor the temperature downstream of the catalytic oxidizer/reducer skid heater and initiate the interlock • Cut off the catalytic oxidizer/reducer skid heater.	
T	**SU/ COM**	Perform a test to verify the interlock: • Monitors the temperature downstream of the catalytic oxidizer/reducer skid heater and initiates the interlock. • Cuts off the catalytic oxidizer/reducer skid heater.	

3.9.2.5.2.1 Failed TCO Heater High Temperature Interlocked Components (failed final control SIS elements)

Requirement: The interlocked components that can fail in a manner that causes a release shall fail to a safe position on loss of control signal or air. The thermal catalytic oxidizer heater contactor (LVP-CTR-00002) shall be designed to fail in an off position on loss of control signal to the heater. [Sections 4.4.4.1.12.3, 4.4.4.1.12.4, Appendix A Table A-1, LAW-DSA]

Basis Discussion: By preventing the final control elements of the SIS from failing in a manner that would cause a release, the failure position of these components reduces the probability of a release of radioactive and chemically hazardous material.

Verification: Verification is expected to be achieved through the following:

Verif. Method	Verif. By	Plan	Notes/Comments
R	**ENG**	Review the design for incorporation of the failure position on loss of control signal, air, or power to the following: • thermal catalytic oxidizer heater - fails in an OFF position.	
T	**SU/ COM**	Perform a test to verify the failure position on loss (or simulated loss) of control signal, air, or power to the following: • thermal catalytic oxidizer heater - fails in an OFF position.	

3.9.2.5.3 TCO Skid ~~Outlet~~ High Temperature Interlock

3.9.2.5.3.1 TCO Skid High Temperature Interlock (Isolate Skid Heater)

Requirement: Upon detection of high TCO skid outlet temperature (LVP-TE-0552/0554, LVP-TT-0552/0554), the interlock shall isolate power to the SCO/SCR skid electric heater (LVP-CTR-00002). The interlock shall

isolate the power to LVP-HTR-00002 before the offgas system primary pathway confinement boundary temperature reaches 428 °F**. [**Sections 4.4.4.1.13.3, 4.4.41.13.4, Appendix A Table A-1, LAW-DSA] (D.2)

~~The TCO skid outlet high temperature interlock shall monitor the TCO skid outlet temperature and, upon detection of high TCO skid outlet temperature, the following actions shall occur:~~

- ~~Stop ammonia addition into the ammonia/air dilution skid.~~
- ~~Isolate the power to the TCO skid heater.~~

~~[Appendix C Table C4-1, LAW PDSA] (D.2)~~

Basis Discussion: The interlock reduces the probability of a release of radioactive and chemically hazardous material by preventing a failure of the offgas confinement boundary caused by high offgas temperatures.

Verification: Verification is expected to be achieved through the following:

Verif. Method	Verif. By	Plan	Notes/Comments
A	**ENG**	Perform an analysis to determine the high outlet temperature limit (< 428 °F) to prevent a breach of the melter offgas confinement boundary.	May be documented in assessment/evaluation report.
R	**ENG**	Review design to verify there are interlock instruments and components that: • Monitor the TCO skid outlet temperature and initiate the interlock. • ~~Stop ammonia addition into the ammonia/air dilution skid.~~ • Isolate the power to the TCO skid heater.	
T	**SU/ COM**	Perform a test to verify the interlock: • Monitors the TCO skid outlet temperature and initiates the interlock. • ~~Stops ammonia addition into the ammonia/air dilution skid.~~ • Isolates the power to the TCO skid heater.	

3.9.2.5.3.2 TCO Skid High Temperature Interlock (Isolate Ammonia Supply)

Requirement: Upon detection of high TCO skid outlet temperature (LVP-TE-0552/0554, LVP-TT-0552/0554), the interlock shall isolate ammonia supply to the SCO/SCR by closing the following valves: SCO/SCR ammonia supply (LVP-YV-0528/0560). The interlock shall isolate SCO/SCR ammonia supply (LVP-YV-0528/0560) before the offgas system primary pathway confinement boundary temperature reaches 428 °F. [Sections 4.4.4.1.13.3, 4.4.4.1.13.4, Appendix A Table A-1, LAW-DSA] (D.2)

Basis Discussion: The interlock reduces the probability of a release of radioactive and chemically hazardous material by preventing a failure of the offgas confinement boundary caused by high offgas temperatures.

Verification: Verification is expected to be achieved through the following:

Verif. Method	Verif. By	Plan	Notes/Comments
A	ENG	Perform an analysis to determine the high outlet temperature limit (< 428 °F) to prevent a breach of the melter offgas confinement boundary.	May be documented in assessment/evaluation report.
R	ENG	Review design to verify there are interlock instruments and components that: • Monitor the TCO skid outlet temperature and initiate the interlock. • Stop ammonia addition into the ammonia/air dilution skid.	
T	SU/ COM	Perform a test to verify the interlock: • Monitors the TCO skid outlet temperature and initiates the interlock. • Stops ammonia addition into the ammonia/air dilution skid.	

3.9.2.5.3.3 Failed TCO Skid High Temperature Interlocked Components (failed final control SIS elements)

Requirement: The interlocked components that can fail in a manner that causes a release shall fail to a safe position on loss of control signal or air. The PPJ ammonia dilution ammonia supply valve (LVP-YV-0528/0560) shall be designed to fail in a closed position on loss of control signal or loss of air to the valve. The thermal catalytic oxidizer heater contactor (LVP-CTR-00002) shall be designed to fail in an off position on loss of control signal to the heater. [Sections 4.4.4.1.13.3, 4.4.4.1.13.4, Appendix A Table A-1, LAW-DSA]

Basis Discussion: By preventing the final control elements of the SIS from failing in a manner that would cause a release, the failure position of these components reduces the probability of a release of radioactive and chemically hazardous material.

Verification: Verification is expected to be achieved through the following:

Verif. Method	Verif. By	Plan	Notes/Comments
R	ENG	Review the design for incorporation of the failure position on loss of control signal or air to the following: • Ammonia dilution ammonia supply valves - fail in a CLOSED position • Thermal catalytic oxidizer heater - fails in an OFF position	
T	SU/ COM	Perform a test to verify the failure position on loss (or simulated loss) of control signal or air to the following: • Ammonia dilution ammonia supply valves - fail in a CLOSED position • Thermal catalytic oxidizer heater - fails in an OFF position	

3.9.2.5.5 Ammonia High Flow Interlock

Requirement: Upon detection of high ammonia supply flow (LVP-FT-0530/0531, LVP-FE-0530/0531), the interlock shall terminate the ammonia supply to the SCO/SCR (LVP-YV-0528/0560). The interlock shall terminate the ammonia supply when the ammonia flow rate is greater than or equal to 47 scfm. [Sections 4.4.4.1.15.3, 4.4.4.1.15.4, Appendix A Table A-1, LAW-DSA] (D.2)~~The ammonia high flow interlock and associated support systems shall isolate the ammonia supply by closing valve LVP-YV-0528 upon detection of high ammonia supply flow. [Appendix C Table C4-1, LAW PDSA] (D.2)~~

Basis Discussion: The interlock mitigates the release of ammonia caused by the ignition of an ignitable concentration of ammonia caused by excessive ammonia supply flow.

Verification: Verification is expected to be achieved through the following:

Verif. Method	Verif. By	Plan	Notes/Comments
A	**ENG**	Perform an analysis to determine the maximum allowable flow rate (≥ 47 scfm) for the ammonia supply.	May be documented in assessment/evaluation report.
R	**ENG**	Review design to verify there are interlock instruments and components that: • Monitor the ammonia supply flow and initiate the interlock. • Isolate the ammonia supply by closing valve LVP-YV-0528/-0560.	
T	**SU/ COM**	Perform a test to verify the interlock: • Monitors the ammonia supply flow and initiates the interlock. • Isolates the ammonia supply by closing valve LVP-YV-0528/-0560.	

3.9.2.5.5.1 Failed Ammonia High Flow Interlocked Components (failed final control SIS elements)

Requirement: The interlocked components that can fail in a manner that causes a release shall fail to a safe position on loss of control signal or air. The PPJ ammonia dilution ammonia supply valve (LVP-YV-0528/0560) is designed to fail in a closed position on loss of control signal or loss of air to the valve. [Sections 4.4.4.1.15.3, 4.4.4.1.15.4, Appendix A Table A-1, LAW-DSA]

Basis Discussion: By preventing the final control elements of the SIS from failing in a manner that would cause a release, the failure position of these components reduces the probability of a release of radioactive and chemically hazardous material.

Verification: Verification is expected to be achieved through the following:

Verif. Method	Verif. By	Plan	Notes/Comments
R	**ENG**	Review the design for incorporation of the failure position on loss of control signal or air to the following: • Ammonia dilution ammonia supply valves - fail in a CLOSED position	

T	**SU/ COM**	Perform a test to verify the failure position on loss (or simulated loss) of control signal or air to the following: • Ammonia dilution ammonia supply valves - fail in a CLOSED position	

3.9.2.5.6 Ammonia Dilution Air Flow Interlock

Requirement: Upon detection of loss of dilution air flow (LVP-FT-0540/0541, LVP-FE-0540/0541) the interlock shall terminate ammonia supply to the SCO/SCR (LVP-YV-0528/0560). The interlock shall terminate the ammonia supply when the dilution air flow is lost (i.e., less than or equal to 369 scfm). The ammonia supply valves (LVP-YV-0528/0560) shall close in sufficient time to prevent reaching LFL in Room L-0322A and prevent exceeding PAC-2 concentration to CLW. [Sections 4.4.4.1.16.3, 4.4.4.1.16.4, Appendix A Table A-1, LAW-DSA] (D.2)

~~The ammonia dilution air flow interlock and associated support systems shall isolate the ammonia supply by closing valve LVP-YV-0528 upon detection of low dilution air flow. [Appendix C Table C4-1, LAW PDSA] (D.2)~~

Basis Discussion: The interlock mitigates the release of ammonia caused by the ignition of an ignitable concentration of ammonia resulting from inadequate air supply flow.

Verification: Verification is expected to be achieved through the following:

Verif. Method	Verif. By	Plan	Notes/Comments
A	**ENG**	Perform an analysis to determine the setpoint for the minimum allowable dilution-air flow rate (≤ 369 scfm) to prevent back flow.	May be documented in assessment/evaluation report.
A	**ENG**	Perform an analysis to determine the maximum closure time of valves LVP-YV-0528/-0560 to prevent reaching LFL in Room L-0322A and prevent exceeding PAC-2 concentration to CLW.	
R	**ENG**	Review design to verify there are interlock instruments and components that: • Monitor the ammonia dilution air flow and initiate the interlock. • Isolate the ammonia supply by closing valves LVP-YV-0528/-0560 and within the closure time determined by the analysis.	
T	**SU/ COM**	Perform a test to verify the interlock: • Monitors the ammonia dilution air flow and initiates the interlock. • Isolates the ammonia supply by closing valves LVP-YV-0528/-0560 and within the closure time determined by the analysis.	

3.9.2.5.6.1 Failed Ammonia Dilution Air Low Flow Interlocked Components (failed final control SIS elements)

Requirement: The interlocked components that can fail in a manner that causes a release shall fail to a safe position on loss of control signal or air. The PPJ ammonia dilution ammonia supply valve (LVP-YV-0528/0560)

is designed to fail in a closed position on loss of control signal or loss of air to the valve. [Sections 4.4.4.1.16.3, 4.4.4.1.16.4, Appendix A Table A-1, LAW-DSA]

Basis Discussion: By preventing the final control elements of the SIS from failing in a manner that would cause a release, the failure position of these components reduces the probability of a release of radioactive and chemically hazardous material.

Verification: Verification is expected to be achieved through the following:

Verif. Method	Verif. By	Plan	Notes/Comments
R	ENG	Review the design for incorporation of the failure position on loss of control signal or air to the following: • Ammonia dilution ammonia supply valves - fail in a CLOSED position	
T	SU/ COM	Perform a test to verify the failure position on loss (or simulated loss) of control signal or air to the following: • Ammonia dilution ammonia supply valves - fail in a CLOSED position	

3.9.2.6.2 Caustic Scrubber ~~Low~~ Recirculation Low Pressure Interlock

Requirement: The interlock shall initiate when caustic scrubber recirculation pressure is less than or equal to 6.8 psig. Upon detection of low caustic scrubber recirculation pressure (LVP-PT-0220), the interlock shall:

- Close caustic scrubber scrub inlet valve (LVP-YV-0219)
- Open TCO skid bypass valve (LVP-YV-0501)
- Isolate power to the TCO heater control (LVP-CTR-00002)
- Close ammonia dilution ammonia supply valves (LVP-YV-0528/0560)
- Close ammonia dilution air supply valve (LVP-YV-0538)

[Sections 4.4.4.1.17.3, 4.4.4.1.17.4, Appendix A Table A-1, LAW-DSA] (D.2)

~~The caustic scrubber low recirculation pressure interlock shall monitor recirculation pressure in the caustic scrubber recirculation line, and upon detection of low pressure in the caustic scrubber recirculation line, the following actions shall occur:~~

~~The recirculation line isolation valve shall be closed.~~

~~Bypass the TCO skid.~~

~~Isolate power to the TCO skid heater.~~

~~Stop ammonia and air supply into the ammonia/air dilution skid.~~

~~[Appendix C Table C4-1, LAW PDSA] (D.2)~~

Basis Discussion: The interlock reduces the probability of a release of radioactive and chemically hazardous material, due to a loss of melter vacuum, by preventing excessive air in-leakage into the offgas system from a failed recirculation line.

Verification: Verification is expected to be achieved through the following:

Verif. Method	Verif. By	Plan	Notes/Comments
A	**ENG**	Perform an analysis to determine caustic scrubber ~~low~~ recirculation low pressure (≤ 6.8 psig).	May be documented in assessment/evaluation report.
R	**ENG**	Review design to verify there are interlock instruments and components that: • Monitor the caustic scrubber recirculation pressure and initiate the interlock. • Close the caustic scrubber recirculation line isolation valve. • Bypass the TCO skid. • Isolate power to the TCO skid heater. • Stop ammonia and air supply into the ammonia/air dilution skid.	
T	**SU/ COM**	Perform a test to verify the interlock: • Monitors the caustic scrubber recirculation pressure and initiates the interlock. • Closes the caustic scrubber recirculation line isolation valve. • Bypasses the TCO skid. • Isolates power to the TCO skid heater. • Stops ammonia and air supply into the ammonia/air dilution skid.	

3.9.2.6.2.1 Failed Caustic Scrubber Recirculation Low Pressure Interlocked Components (failed final control SIS elements)

Requirement: The interlocked components that can fail in a manner that causes a release shall fail to a safe position on loss of control signal or air. The thermal catalytic oxidizer skid bypass valve (LVP-YV-0501) shall be designed to fail in an open position on loss of control signal or loss of air to the valve. The PPJ ammonia dilution air supply valve (LVP-YV-0538) shall be designed to fail in a closed position on loss of control signal or loss of air to the valve. The PPJ ammonia dilution ammonia supply valve (LVP-YV-0528/0560) shall be designed to fail in a closed position on loss of control signal or loss of air to the valve. The thermal catalytic oxidizer heater contactor (LVP-CTR-00002) shall be designed to fail in an off position on loss of control signal to the heater. The caustic scrubber scrub inlet valve (LVP-YV-0219) shall be designed to fail in a closed position on loss of control signal or loss of air to the valve. [Sections 4.4.4.1.17.3, 4.4.4.1.17.4, Appendix A Table A-1, LAW-DSA]

Basis Discussion: By preventing the final control elements of the SIS from failing in a manner that would cause a release, the failure position of these components reduces the probability of a release of radioactive and chemically hazardous material.

Verification: Verification is expected to be achieved through the following:

Verif. Method	Verif. By	Plan	Notes/Comments
R	**ENG**	Review the design for incorporation of the failure position on loss of control signal or air to the following: • Thermal catalytic oxidizer skid bypass valve - fails in an OPEN position	

		• PPJ ammonia dilution air supply valve - fails in a CLOSED position • PPJ ammonia dilution ammonia supply valves - fail in a CLOSED position • Thermal catalytic oxidizer heater - fails in an OFF position Caustic scrubber scrub inlet valve - fails in a CLOSED position	
T	**SU/ COM**	Perform a test to verify the failure position on loss (or simulated loss) of control signal or air to the following: • Thermal catalytic oxidizer skid bypass valve - fails in an OPEN position • PPJ ammonia dilution air supply valve - fails in a CLOSED position • PPJ ammonia dilution ammonia supply valves - fail in a CLOSED position • Thermal catalytic oxidizer heater - fails in an OFF position • Caustic scrubber scrub inlet valve - fails in a CLOSED position	

3.9.2.6.3 Caustic Scrubber Recirculation Low Flow Interlock ~~Caustic Scrubber Loss of Cooling Interlock (Low Flow)~~

Requirement: The interlock shall initiate when caustic scrubber recirculation flow is less than or equal to 160 gpm. Upon detection of low caustic scrubber recirculation flow (LVP-FE-0221, LVP-FT-0221), the interlock shall perform the following:

- Open the SCO/SCR bypass valve (LVP-YV-0501)
- Isolate power to the SCO/SCR heater control (LVP-CTR-00002)
- Close the SCO/SCR ammonia supply valves (LVP-YV-0528/0560)
- Close the SCO/SCR dilution air supply valve (LVP-YV-0538)

[Sections 4.4.4.1.18.3, 4.4.4.1.18.4, Appendix A Table A-1, LAW-DSA] (D.2)

~~The caustic scrubber loss of cooling interlock shall monitor flow in the caustic scrubber recirculation line. Upon detection of low flow, the following actions shall occur:~~

~~Bypass the TCO skid.~~

~~Isolate power to the TCO skid heater.~~

~~Stop ammonia and air supply into the ammonia/air dilution skid.~~

~~[Appendix C, Table C4-1, LAW PDSA] (D.2)~~

Basis Discussion: The interlock reduces the probability of a release of radioactive and chemically hazardous material by preventing a failure of the exhausters from caustic scrubber outlet high temperatures.

Verification: Verification is expected to be achieved through the following:

Verif. Method	Verif. By	Plan	Notes/Comments
A	**ENG**	Perform an analysis to determine the minimum flow rate (≤ 160 gpm) required for the caustic scrubber recirculation line.	May be documented in assessment/evaluation report.

Verif. Method	Verif. By	Plan	Notes/Comments
R	**ENG**	Review design to verify there are interlock instruments and components that: • Monitor the Caustic scrubber caustic scrubber recirculation line flow and initiate the interlock. • Bypass the TCO skid. • Isolate power to the TCO skid heater. • Stop ammonia and air supply into the ammonia/air dilution skid.	
T	**SU/ COM**	Perform a test to verify the interlock: • Monitors the Caustic scrubber caustic scrubber recirculation line flow and initiates the interlock. • Bypasses the TCO skid. • Isolates power to the TCO skid heater. • Stops ammonia and air supply into the ammonia/air dilution skid.	

3.9.2.6.3.1 Failed Caustic Scrubber Recirculation Low Flow Interlocked Components (failed final control SIS elements)

Requirement: The interlocked components that can fail in a manner that causes a release shall fail to a safe position on loss of control signal or air. The thermal catalytic oxidizer skid bypass valve (LVP-YV-0501) shall be designed to fail in an open position on loss of control signal or loss of air to the valve. The PPJ ammonia dilution air supply valve (LVP-YV-0538) shall be designed to fail in a closed position on loss of control signal or loss of air to the valve. The PPJ ammonia dilution ammonia supply valve (LVP-YV-0528/0560) shall be designed to fail in a closed position on loss of control signal or loss of air to the valve. The thermal catalytic oxidizer heater contactor (LVP-CTR-00002) shall be designed to fail in an off position on loss of control signal to the heater. [Sections 4.4.4.1.18.3, 4.4.4.1.18.4, Appendix A Table A-1, LAW-DSA]

Basis Discussion: By preventing the final control elements of the SIS from failing in a manner that would cause a release, the failure position of these components reduces the probability of a release of radioactive and chemically hazardous material.

Verification: Verification is expected to be achieved through the following:

Verif. Method	Verif. By	Plan	Notes/Comments
R	**ENG**	Review the design for incorporation of the failure position on loss of control signal or air to the following: • Thermal catalytic oxidizer skid bypass valve - fails in an OPEN position • PPJ ammonia dilution air supply valve - fails in a CLOSED position • PPJ ammonia dilution ammonia supply valves - fail in a CLOSED position • Thermal catalytic oxidizer heater - fails in an OFF position	

T	**SU/ COM**	Perform a test to verify the failure position on loss (or simulated loss) of control signal or air to the following: • Thermal catalytic oxidizer skid bypass valve - fails in an OPEN position • PPJ ammonia dilution air supply valve - fails in a CLOSED position • PPJ ammonia dilution ammonia supply valves - fail in a CLOSED position • Thermal catalytic oxidizer heater - fails in an OFF position	

3.9.2.6.6 Caustic Scrubber ~~Low Water Supply~~ Process Water Supply Low Pressure Interlock

Requirement: The interlock shall isolate water supply when the process water supply pressure is less than or equal to 53.2 psig. Upon detection of low process water supply pressure (LVP-PT-0216), the interlock shall isolate the supply (LVP-YV-0201). [Sections 4.4.4.1.19.3, 4.4.4.1.19.4, Appendix A Table A-1, LAW-DSA] (D.2)~~The caustic scrubber low water supply interlock shall monitor pressure in the process water line and shall close the caustic scrubber process water line isolation valve upon detection of low pressure in the process water line. [Appendix C Table C4-1, LAW PDSA] (D.2)~~

Basis Discussion: The interlock reduces the probability of a release of radioactive and chemically hazardous material by preventing a loss of LVP header vacuum due to excessive air in-leakage from a failed process water line in the caustic scrubber system.

Verification: Verification is expected to be achieved through the following:

Verif. Method	Verif. By	Plan	Notes/Comments
A	**ENG**	Perform an analysis to determine the caustic scrubber low water supply pressure (≤ 53.2 psig).	May be documented in assessment/evaluation report.
R	**ENG**	Review design to verify there are interlock instruments and components that: • Monitor the process ~~waster~~ water line pressure and initiate the interlock • Close the caustic scrubber process water line isolation valve.	
T	**SU/ COM**	Perform a test to verify the interlock: • Monitors the process ~~waster~~ water line pressure and initiates the interlock • Closes the caustic scrubber process water line isolation valve.	

3.9.2.6.6.1 Failed Caustic Scrubber Process Water Supply Low Pressure Interlocked Components (failed final control SIS elements)

Requirement: The interlocked components that can fail in a manner that causes a release shall fail to a safe position on loss of control signal or air. The PPJ caustic scrubber process service water supply valve (LVP-YV-0201) shall be designed to fail in a closed position on loss of control signal or loss of air to the valve. [Sections 4.4.4.1.19.3, 4.4.4.1.19.4, Appendix A Table A-1, LAW-DSA]

Basis Discussion: By preventing the final control elements of the SIS from failing in a manner that would cause a release, the failure position of these components reduces the probability of a release of radioactive and chemically hazardous material.

Verification: Verification is expected to be achieved through the following:

Verif. Method	Verif. By	Plan	Notes/Comments
R	ENG	Review the design for incorporation of the failure position on loss of control signal or air to the following: • Caustic scrubber process service water supply valve - fails in a CLOSED position	
T	SU/ COM	Perform a test to verify the failure position on loss (or simulated loss) of control signal or air to the following: • Caustic scrubber process service water supply valve - fails in a CLOSED position	

3.9.2.7 LVP Header Interlocks

3.9.2.7.1 Offgas Header High and Low Pressure Interlock ~~LVP Header High/Low Pressure Interlock~~

3.9.2.7.1.1 Offgas Header High and Low Pressure Interlock (Terminate Sources of Pressure)

Requirement: Upon detection of high or low offgas header pressure (LVP-PT-0139/0140), the interlock shall limit MAR and terminate sources of pressurization to both melters by closing the ADS air and water supply valves and the film cooler water valves (final elements listed below). The interlock shall terminate sources of melter pressurization if the header pressure is greater than or equal to −56.5 in. WG or exceeds −139.5 in. WG.

- Close ADS air supply valves (Melter 1 - LFP-YV-1208/1212, Melter 2 - LFP-YV-2208/2212)
- Close ADS water supply valves (Melter 1 - LFP-YV-1207/1211, Melter 2 - LFP-YV-2207/2211)
- Close film cooler water valves (Melter 1 - LOP-YV-1109/1405, Melter 2 - LFP-YV-2109/2405)

[Sections 4.4.4.1.9.3, 4.4.4.1.9.4, 4.4.4.1.10.3, 4.4.4.1.10.4, Appendix A Table A-1, LAW-DSA] (D.2)

~~The LVP header high/low pressure interlock shall monitor LVP header pressure. Upon detection of high or low header pressure, the following actions shall occur:~~

~~Stop air to the ADS pumps for both melters (LFP/LCP)~~

~~Stop ADS flush water to both melters (LFP/LCP)~~

~~Bypass the mercury mitigation skid, the TCO skid, and the caustic scrubber.~~

~~Stop ammonia and air addition into the ammonia/air dilution skid.~~

~~Isolate power to the TCO skid heater.~~

~~Take the exhausters to a predetermined pressure setting.~~

~~Stop air and water flow to the primary and standby film coolers for both melters.~~

~~Open the primary and standby film coolers emergency air inbleed for both melters.~~

~~Reconfigure the WESP outlet valves to the fully open position for both melters.~~

~~Stop air flow to both WESPs.~~

~~Open the isolation valve to the bypass vacuum breaker.~~

~~Close the vessel vent header pressure control valve.~~

~~Open the bypass valve from the standby film coolers to the SBSs.~~

~~[Appendix C, Table C4-1, LAW PDSA] (D.2)~~

Basis Discussion: The interlock limits the release of radioactive and chemically hazardous material by reducing sources of offgas and reconfiguring the offgas system to maintain melter plenum vacuum in the event of high or low pressure in the LVP header. Note that the term "exceed" should be interpreted as to reach a value more negative (pressure) than the given value.~~The interlock limits the release of radioactive and chemically hazardous material by terminating melter feed to both melters, stopping ammonia supply, and reconfiguring the offgas system in the event of high or low pressure in the LVP header.~~

~~It is noted that while other melter feed termination interlocks include a subsequent isolation of the water supply to the ADS pumps due to concerns related to cold cap durations, no such issue exists for low LVP header vacuum. The system can run indefinitely in this configuration, and therefore, water isolation to the ADS pumps is not a required function.~~

Verification: Verification is expected to be achieved through the following:

Verif. Method	Verif. By	Plan	Notes/Comments
A	**ENG**	Perform an analysis to determine the LVP header high and low pressure interlock setpoints~~.~~ at ≥ -56.5 in. W.G. or ≤ -139.5 in. W.G., respectively	May be documented in assessment/evaluation report.
R	**ENG**	Review design to verify there are interlock instruments and components that: • Monitors the LVP header pressure and initiates the interlock • Stop air to the ADS pumps for both melters • Stop ADS flush water to both melters • Isolate film cooler wash supply ~~• Bypass the mercury mitigation skid, the TCO skid, and the caustic scrubber.~~ ~~• Stop ammonia and air addition into the ammonia/air dilution skid.~~ ~~• Isolate power to the TCO skid heater.~~ ~~• Take the exhausters to a predetermined pressure setting.~~ ~~• Stop air and water flow to the primary and standby film coolers for both melters.~~ ~~• Open the primary and standby film coolers emergency air inbleed for both melters.~~ ~~Reconfigure the WESP outlet valves to the fully open position for both melters.~~ ~~• Stop air flow to both WESPs.~~ ~~• Open the isolation valve to the bypass vacuum breaker.~~ ~~• Close the vessel vent header pressure control valve.~~ ~~Open the bypass valve from the standby film coolers to the SBSs.~~	

Verif. Method	Verif. By	Plan	Notes/Comments
T	**SU/ COM**	Perform a test to verify the interlock: • Monitors the LVP header pressure and initiates the interlock. • Stops air to the ADS pumps for both melters. • Stops ADS flush water to both melters. • Isolate film cooler wash supply • ~~Bypasses the mercury mitigation skid, the TCO skid, and the caustic scrubber.~~ • ~~Stops ammonia and air addition into the ammonia/air dilution skid.~~ • ~~Isolates power to the TCO skid heater.~~ • ~~Take the exhausters to a predetermined pressure setting.~~ • ~~Stops air and water flow to the primary and standby film coolers for both melters.~~ • ~~Opens the primary and standby film coolers emergency air inbleed for both melters.~~ • ~~Reconfigures the WESP outlet valves to the fully open position for both melters.~~ • ~~Stops air flow to both WESPs.~~ • ~~Opens the isolation valve to the bypass vacuum breaker.~~ • ~~Closes the vessel vent header pressure control valve.~~ • ~~Opens the bypass valve from the standby film coolers to the SBSs.~~	

3.9.2.7.1.2 Offgas Header High and Low Pressure Interlock (Reduce Pressuized Air Sources)

Requirement: Upon detection of high offgas header pressure (LVP-PT-0139/0140), the interlock shall reduce pressurized air sources to both primary offgas systems and support offgas system flow by closing the film cooler air valves and WESP air valves and opening the primary and standby offgas film cooler air inbleed valves (final elements listed below). The interlock shall terminate film cooler air and WESP air if the header pressure is greater than or equal to −56.5 in. WG or exceeds -139.5 in. WG. The interlock shall open melter primary and standby offgas film cooler air inbleed valves no sooner than 78.5 seconds after detection of the high- or low-pressure condition (to allow vacuum to be re-established in melter if lost).

- Close film cooler air valves (Melter 1 - LOP-YV-1129/1404, Melter 2 - LOP-YV-2129/2404)
- Close WESP air valves (Melter 1 - LOP-YV-1098/1161, Melter 2 - LOP-YV-2098/2161)
- Open melter primary offgas film cooler air inbleed valves (Melter 1 - LOP-YV-1401/1407, Melter 2 - LOP-YV-2401/2407))
- Open melter standby offgas film cooler air inbleed valves (Melter 1 - LOP-YV-1402/1406, Melter 2 - LOP-YV-2402/2406)

[Sections 4.4.4.1.9.3, 4.4.4.1.9.4, 4.4.4.1.10.3, 4.4.4.1.10.4, Appendix A Table A-1, LAW-DSA] (D.2)

Basis Discussion: The interlock limits the release of radioactive and chemically hazardous material by reducing sources of offgas and reconfiguring the offgas system to maintain melter plenum vacuum in the event of high or low pressure in the LVP header. Note that the term “exceed” should be interpreted as to reach a value more negative (pressure) than the given value.

Verification: Verification is expected to be achieved through the following:

Verif. Method	Verif. By	Plan	Notes/Comments
A	ENG	Perform an analysis to determine the LVP header high and low pressure interlock setpoints at ≥ -56.5 in. W.G. or ≤ -139.5 in. W.G., respectively	May be documented in assessment/evaluation report.
R	ENG	Review design to verify there are interlock instruments and components that: • Monitors the LVP header pressure and initiates the interlock • Close WESP Purge Air Valves • Close Film Cooler Air Supply Valves • Open Primary and Standby Film Cooler Emergency Air Inbleed Valves	inbleed valves open no sooner than 78.5 seconds after detection of the high- or low-pressure condition
T	SU/ COM	Perform a test to verify the interlock: • Monitors the LVP header pressure and initiates the interlock. • Close WESP Purge Air Valves • Close Film Cooler Air Supply Valves • Open Primary and Standby Film Cooler Emergency Air Inbleed Valves	inbleed valves open no sooner than 78.5 seconds after detection of the high- or low-pressure condition

3.9.2.7.1.3 Offgas Header High and Low Pressure Interlock (Exhauster Suction Load)

Requirement: Upon detection of high or low offgas header pressure (LVP-PT-0139/0140), the interlock shall reduce exhauster suction load by opening the standby offgas line valve, WESP outlet valve, carbon bed bypass valve, TCO bypass valve and caustic scrubber bypass valve and closing the vessel vent isolation valve (final elements listed below). The interlock shall reduce suction loads if the header pressure is greater than or equal to −56.5 in. WG or exceeds −139.5 in. WG.

- Open standby offgas line valve (LOP-YV-1008/2008)
- Open WESP outlet valve (LOP-FV-1140/2140)
- Close vessel vent isolation valve (LVP-PV-0072)
- Open carbon bed bypass valve (LVP-YV-0403)
- Open SCO/SCR bypass valve (LVP-YV-0501)
- Open caustic scrubber bypass valve (LVP-YV-0097)

[Sections 4.4.4.1.9.3, 4.4.4.1.9.4, 4.4.4.1.10.3, 4.4.4.1.10.4, Appendix A Table A-1, LAW-DSA] (D.2)

Basis Discussion: The interlock limits the release of radioactive and chemically hazardous material by reducing sources of offgas and reconfiguring the offgas system to maintain melter plenum vacuum in the event of high or low pressure in the LVP header. Note that the term “exceed” should be interpreted as to reach a value more negative (pressure) than the given value.

Verification: Verification is expected to be achieved through the following:

Verif. Method	Verif. By	Plan	Notes/Comments
A	ENG	Perform an analysis to determine the LVP header high and low pressure interlock setpoints at ≥ -56.5 in. W.G. or ≤ -139.5 in. W.G., respectively	May be documented in assessment/evaluation report.

Verif. Method	Verif. By	Plan	Notes/Comments
R	ENG	Review design to verify there are interlock instruments and components that: • Monitors the LVP header pressure and initiates the interlock • Open Standby Film Cooler Isolation Valve • Open Offgas Flow Control Valve • Open Caustic Scrubber Bypass Valve • Open TCO Skid Bypass Valve • Open Carbon Bed Adsorber Bypass Valve • Close Vessel Vent Header Pressure Control Valve	
T	SU/ COM	Perform a test to verify the interlock: • Monitors the LVP header pressure and initiates the interlock. • Open Standby Film Cooler Isolation Valve • Open Offgas Flow Control Valve • Open Caustic Scrubber Bypass Valve • Open TCO Skid Bypass Valve • Open Carbon Bed Adsorber Bypass Valve • Close Vessel Vent Header Pressure Control Valve	

3.9.2.7.1.4 Offgas Header High and Low Pressure Interlock (Reduce Sources of Heat and Air in Secondary Offgas)

Requirement: Upon detection of high offgas header pressure (LVP-PT-0139/0140), the interlock shall reduce sources of heat and air in the secondary offgas system by closing the ammonia dilution air supply valve and ammonia dilution ammonia supply valve and turning off the TCO heater (final elements listed below). Initiate interlock to reduce sources of heat load and air in the secondary offgas system if the header pressure is greater than or equal to −56.5 in. WG or exceeds -139.5 in. WG.

- Close SCO/SCR dilution air supply valve (LVP-YV-0538)
- Close ammonia supply valve (LVP-YV-0528/0560)
- Turn off SCO/SCR heater control contactor (LVP-CTR-00002)

[Sections 4.4.4.1.9.3, 4.4.4.1.9.4, 4.4.4.1.10.3, 4.4.4.1.10.4, Appendix A Table A-1, LAW-DSA] (D.2)

Basis Discussion: The interlock limits the release of radioactive and chemically hazardous material by reducing sources of offgas and reconfiguring the offgas system to maintain melter plenum vacuum in the event of high or low pressure in the LVP header. Note that the term “exceed” should be interpreted as to reach a value more negative (pressure) than the given value.

Verification: Verification is expected to be achieved through the following:

Verif. Method	Verif. By	Plan	Notes/Comments
A	ENG	Perform an analysis to determine the LVP header high and low pressure interlock setpoints at ≥ -56.5 in. W.G. or ≤ -139.5 in. W.G., respectively	May be documented in assessment/evaluation report.
R	ENG	Review design to verify there are interlock instruments and components that:	

Verif. Method	Verif. By	Plan	Notes/Comments
		• Monitors the LVP header pressure and initiates the interlock • Isolate power to the TCO skid heater. • Close Ammonia Dilution Ammonia Supply Valve • Close Ammonia Dilution Air Supply Valve	
T	SU/ COM	Perform a test to verify the interlock: • Monitors the LVP header pressure and initiates the interlock. • Isolate power to the TCO skid heater. • Close Ammonia Dilution Ammonia Supply Valve • Close Ammonia Dilution Air Supply Valve	

3.9.2.7.1.5 Offgas Header High and Low Pressure Interlock (Reduce Offgas Load)

Requirement: Upon detection of high offgas header pressure (LVP-PT-0139/0140), the interlock shall restrict the exhausters to a speed compatible with the reduced offgas load by setting exhausters to fixed speed and opening the vacuum breaker line valves (final elements listed below). The interlock shall set the exhausters to fixed speed and open vacuum breaker line valves if the header pressure is greater than or equal to −56.5 in. WG or exceeds −139.5 in. WG.

- Set exhauster to fixed 2020 RPM speed (LVP-EXHR-00001A [LVP-YC-0023B], LVP-EXHR-00001B [LVP-YC-0020B], and LVP-EXHR-00001C [LVP-YC-0017B])
- Open vacuum breaker line valves (LVP-YV-0453/0454)

[Sections 4.4.4.1.9.3, 4.4.4.1.9.4, 4.4.4.1.10.3, 4.4.4.1.10.4, Appendix A Table A-1, LAW-DSA] (D.2)

Basis Discussion: The interlock limits the release of radioactive and chemically hazardous material by reducing sources of offgas and reconfiguring the offgas system to maintain melter plenum vacuum in the event of high or low pressure in the LVP header. Note that the term “exceed” should be interpreted as to reach a value more negative (pressure) than the given value.

Verification: Verification is expected to be achieved through the following:

Verif. Method	Verif. By	Plan	Notes/Comments
A	ENG	Perform an analysis to determine the LVP header high and low pressure interlock setpoints at ≥ -56.5 in. W.G. or ≤ -139.5 in. W.G., respectively	May be documented in assessment/evaluation report.
R	ENG	Review design to verify there are interlock instruments and components that: • Monitors the LVP header pressure and initiates the interlock • Set offgas exhausters to fixed speed • Open the isolation valve to the bypass vacuum breaker.	
T	SU/ COM	Perform a test to verify the interlock: • Monitors the LVP header pressure and initiates the interlock. • Set offgas exhausters to fixed speed	

Verif. Method	Verif. By	Plan	Notes/Comments
		• Open the isolation valve to the bypass vacuum breaker.	

3.9.2.7.1.6 Failed Offgas Header High and Low Pressure Interlocked Components (failed final control SIS elements)

Requirement: The interlocked components that can fail in a manner that causes a release shall fail to a safe position on loss of control signal or air. The PPJ melter film cooler air supply valve (LOP-YV-1129/1404, LOP-YV-2129/2404) shall be designed to fail in a closed position on loss of control signal or loss of air to the valve. The PPJ melter film cooler water supply valve (LOP-YV-1109/1405, LOP-YV-2109/2405) shall be designed to fail in a closed position on loss of control signal or loss of air to the valve. The PPJ WESP purge air valve (LOP-YV-1098/1161, LOP-YV-2098/2161) shall be designed to fail in a closed position on loss of control signal or loss of air to the valve. The PPJ melter standby film cooler isolation valve (LOP-YV-1008 or LOP-YV-2008) shall be designed to fail in an open position on loss of control signal or loss of air to the valve. The PPJ melter 1 and 2 primary film cooler emergency air inbleed valve (LOP-YV-1401/1407, LOP-YV-2401/2407) shall be designed to fail in an open position on loss of control signal or loss of air to the valve. The PPJ melter standby film cooler emergency air inbleed valve (LOP-YV-1402/1406, LOP-YV-2402/2406) shall be designed to fail in an open position on loss of control signal or loss of air to the valve. The PPJ melter offgas flow control valve (LOP-FV-1140 or LOP-FV-2140) shall be designed to fail in an open position on loss of control signal or loss of air to the valve. The PPJ carbon bed adsorber bypass valve (LVP-YV-0403) shall be designed to fail in an open position on loss of control signal or loss of air to the valve. The thermal catalytic oxidizer skid bypass valve (LVP-YV-0501) shall be designed to fail in an open position on loss of control signal or loss of air to the valve. The PPJ ammonia dilution air supply valve (LVP-YV-0538) shall be designed to fail in a closed position on loss of control signal or loss of air to the valve. The PPJ ammonia dilution ammonia supply valve (LVP-YV-0528/0560) shall be designed to fail in a closed position on loss of control signal or loss of air to the valve. The thermal catalytic oxidizer heater contactor (LVP-CTR-00002) shall be designed to fail in an off position on loss of control signal to the heater. The caustic scrubber bypass valve (LVP-YV-0097) shall be designed to fail in an open position on loss of control signal or loss of air to the valve. The vacuum breaker line valve (LVP-YV-0453/0454) shall be designed to fail in an open position on loss of control signal or loss of air to the valve. The offgas exhauster adjustable speed drive (LVP-ASD-00001A, B, C) shall be designed to fail in a minimum fixed speed position, that will maintain the melter 1 and 2 plenums under vacuum, on loss of control signal to the drive. [Sections 4.4.4.1.9.3, 4.4.4.1.9.4, 4.4.4.1.10.3, 4.4.4.1.10.4, Appendix A Table A-1, LAW-DSA]

Basis Discussion: By preventing the final control elements of the SIS from failing in a manner that would cause a release, the failure position of these components reduces the probability of a release of radioactive and chemically hazardous material.

Verification: Verification is expected to be achieved through the following:

Verif. Method	Verif. By	Plan	Notes/Comments
R	ENG	Review the design for incorporation of the failure position on loss of control signal, air, or power: • Offgas exhauster adjustable speed drive - fail in a minimum FIXED speed position • Melter 1 and 2 Feed Pump Plant Air Supply Valves – fail in a CLOSED position • Melter 1 and 2 Feed Pump Demineralized Water Supply Valves – fail in a CLOSED position	

		• Melter 1 and 2 WESP Purge Air Valves – fail in a CLOSED position • Melter 1 and 2 Film Cooler Wash Supply Valves – fail in a CLOSED position • Melter 1 and 2 Film Cooler Air Supply Valves – fail in a CLOSED position • Melter 1 and 2 Primary Film Cooler Emergency Air Inbleed Valves – fail in an OPEN position • Melter 1 and 2 Standby Film Cooler Emergency Air Inbleed Valves – fail in an OPEN position • Melter 1 and 2 Standby Film Cooler Isolation Valves – fail in an OPEN position • Melter 1 and 2 Offgas Flow Control Valves – fail in an OPEN position • Ammonia Dilution Ammonia Supply Valves – fail in a CLOSED position • Ammonia Dilution Air Supply Valve – fails in a CLOSED position • Caustic Scrubber Bypass Valve – fails in an OPEN position • TCO Skid Bypass Valve – fails in an OPEN position • Carbon Bed Adsorber Bypass Valve – fails in an OPEN position • Electrical TCO Heater contactor – fails in an OPEN position. • Vessel Vent Header Pressure Control Valve – fails in a CLOSED position • LVP Bypass Vacuum Breaker Isolation Valves – fail in an OPEN position	
T	**SU/ COM**	Perform a test to verify the failure position on loss (or simulated loss) of control signal, air, or power: • Offgas exhauster adjustable speed drive - fail in a minimum FIXED speed position • Melter 1 and 2 Feed Pump Plant Air Supply Valves – fail in a CLOSED position • Melter 1 and 2 Feed Pump Demineralized Water Supply Valves – fail in a CLOSED position • Melter 1 and 2 WESP Purge Air Valves – fail in a CLOSED position • Melter 1 and 2 Film Cooler Wash Supply Valves – fail in a CLOSED position • Melter 1 and 2 Film Cooler Air Supply Valves – fail in a CLOSED position • Melter 1 and 2 Primary Film Cooler Emergency Air Inbleed Valves – fail in an OPEN position • Melter 1 and 2 Standby Film Cooler Emergency Air Inbleed Valves – fail in an OPEN position • Melter 1 and 2 Standby Film Cooler Isolation Valves – fail in an OPEN position • Melter 1 and 2 Offgas Flow Control Valves – fail in an OPEN position • Ammonia Dilution Ammonia Supply Valves – fail in a CLOSED position	

		• Ammonia Dilution Air Supply Valve – fails in a CLOSED position • Caustic Scrubber Bypass Valve – fails in an OPEN position • TCO Skid Bypass Valve – fails in an OPEN position • Carbon Bed Adsorber Bypass Valve – fails in an OPEN position • Electrical TCO Heater contactor – fails in an OPEN position. • Vessel Vent Header Pressure Control Valve – fails in a CLOSED position • LVP Bypass Vacuum Breaker Isolation Valves – fail in an OPEN position	

3.9.2.8.1 Offgas Exhauster Shaft Seal Air Supply Low Pressure Interlock

3.9.2.8.1.1 Offgas Exhauster Shaft Seal Air Supply Low Pressure Interlock (Exhauster Shaft Seal Purge)

Requirement: Upon detection of low shaft seal air supply pressure (LVP-PT-0156/0160/0164), the interlock shall isolate normal shaft seal purge air supply to the affected exhauster (LVP-YV-0157/0161/0165). The interlock shall isolate normal shaft seal purge air supply to the affected exhauster and feed to both melters if one of the exhauster shaft seal air supply pressure transmitters indicates the air supply pressure is less than or equal to 90 psig. [Sections 4.4.4.1.21.3, 4.4.4.1.21.4, Appendix A Table A-1, LAW-DSA] (D.2)~~The offgas exhauster shaft seal air supply low pressure interlock shall monitor pressure to the exhauster shaft purge air seals and upon detection of low purge air pressure the following actions shall occur:~~

~~Stop air to the ADS pumps for both melters. (LFP/LCP)~~

~~Isolate normal air supply.~~

~~[Appendix C Table C4-1, LAW PDSA] (D.2)~~

Basis Discussion: The interlock mitigates the release of radioactive and chemically hazardous material through the exhauster shaft seals by supplying back-up air pressure to the exhauster shaft seals.

Verification: Verification is expected to be achieved through the following:

Verif. Method	Verif. By	Plan	Notes/Comments
A	**ENG**	Perform an analysis to determine the offgas exhausters minimum acceptable pressure (≤ 90 psig) for the normal purge air supply to maintain the shaft seal.	May be documented in assessment/evaluation report.
R	**ENG**	Review design to verify there are interlock instruments and components that: • Monitor the pressures of the exhausters purge air seals and initiate the interlock. • ~~Stop air to the ADS pumps for both melters. (LFP/LCP).~~ • Isolate normal air supply.	

Verif. Method	Verif. By	Plan	Notes/Comments
T	**SU/ COM**	Perform a test to verify the interlock: • Monitors the pressures of the exhausters purge air seals and initiates the interlock. • ~~Stops air to the ADS pumps for both melters. (LFP/LCP).~~ • Isolates normal air supply.	

3.9.2.8.1.2 Offgas Exhauster Shaft Seal Air Supply Low Pressure Interlock (Melter Feed)

Requirement: Upon detection of low shaft seal air supply pressure (LVP-PT-0156/0160/0164), the interlock shall isolate feed to both melters (Melter 1 - LFP-YV-1208/1212, Melter 2 - LFP-YV-2208/2212). Initiate interlock to isolate PPJ melter feed pump plant air supply valve if pressure is less than or equal to 90 psig. [Sections 4.4.4.1.21.3, 4.4.4.1.21.4, Appendix A Table A-1, LAW-DSA] (D.2)

Basis Discussion: The interlock mitigates the release of radioactive and chemically hazardous material through the exhauster shaft seals by supplying back-up air pressure to the exhauster shaft seals.

Verification: Verification is expected to be achieved through the following:

Verif. Method	Verif. By	Plan	Notes/Comments
R	**ENG**	Review design to verify there are interlock instruments and components that: • Monitor the pressures of the exhausters purge air seals and initiate the interlock. • Stop air to the ADS pumps for both melters. (LFP/LCP).	
T	**SU/ COM**	Perform a test to verify the interlock: • Monitors the pressures of the exhausters purge air seals and initiates the interlock. • Stops air to the ADS pumps for both melters. (LFP/LCP).	

3.9.2.8.1.3 Failed Offgas Exhauster Shaft Seal Air Supply Low Pressure Interlocked Components (failed final control SIS elements)

Requirement: The interlocked components that can fail in a manner that causes a release shall fail to a safe position on loss of control signal or air. The PPJ exhauster shaft normal purge air supply valve (LVP-YV-0157/0161/0165) shall be designed to fail in a closed position on loss of control signal or loss of air to the valve. [Sections 4.4.4.1.21.3, 4.4.4.1.21.4, Appendix A Table A-1, LAW-DSA]

Basis Discussion: By preventing the final control elements of the SIS from failing in a manner that would cause a release, the failure position of these components reduces the probability of a release of radioactive and chemically hazardous material.

Verification: Verification is expected to be achieved through the following:

Verif. Method	Verif. By	Plan	Notes/Comments
R	ENG	Review the design for incorporation of the failure position on loss of control signal or air to the following: • Exhauster shaft normal purge air supply valves - fail in a CLOSED position	
T	SU/ COM	Perform a test to verify the failure position on loss (or simulated loss) of control signal or air to the following: • Exhauster shaft normal purge air supply valve - fail in a CLOSED position	

3.9.2.8.4 Offgas Exhauster 1A/1B/1C Shaft Seal Low Pressure Interlock

Requirement: Upon detection of low shaft seal pressure (LVP-PT-0166/0162/0158), the interlock shall open the backup purge air supply bypass around the purge air panels to the affected exhauster by actuating (LVP-YV-0159/0163/0167). The interlock shall open the backup purge air supply bypass around the purge air panels when the shaft seal air supply pressure is less than or equal to 35.7 psig. [Sections 4.4.4.1.20.3, 4.4.4.1.20.4, Appendix A Table A-1, LAW-DSA] (D.2)~~The offgas exhauster 1A/1B/1C shaft seal low pressure interlock shall activate the backup purge air supply upon detection of low purge air pressure. [Appendix C Table C4-1, LAW PDSA] (D.2)~~

Basis Discussion: The interlock limits the release of radioactive and chemically hazardous material through the exhauster shaft seals by supplying back-up air pressure to the exhauster shaft seals. [ALARA]

Verification: Verification is expected to be achieved through the following:

Verif. Method	Verif. By	Plan	Notes/Comments
A	ENG	Perform an analysis to determine exhauster's low purge air pressure (≤ 35.7 psig).	May be documented in assessment/evaluation report.
R	ENG	Review design to verify there are interlock instruments and components that: • Monitor the exhauster's shaft purge air seals and initiate the interlock. • Activate the backup purge air supply.	
T	SU/ COM	Perform a test to verify the interlock: • Monitors the exhauster's shaft purge air seals and initiates the interlock. • Activates the backup purge air supply.	

3.9.2.8.4.1 Failed Offgas Exhauster 1A/1B/1C Shaft Seal Low Pressure Interlocked Components (failed final control SIS elements)

Requirement: The interlocked components that can fail in a manner that causes a release shall fail to a safe position on loss of control signal or air. The exhauster shaft seal air regulator bypass (LVP-YV-0159/0163/0167) shall be designed to fail in an open position on loss of control signal or loss of air to the valve. [Sections 4.4.4.1.20.3, 4.4.4.1.20.4, Appendix A Table A-1, LAW-DSA]

Basis Discussion: By preventing the final control elements of the SIS from failing in a manner that would cause a release, the failure position of these components reduces the probability of a release of radioactive and chemically hazardous material.

Verification: Verification is expected to be achieved through the following:

Verif. Method	Verif. By	Plan	Notes/Comments
R	ENG	Review the design for incorporation of the failure position on loss of control signal or air to the following: • Exhauster shaft seal air regulator bypass valves - fail in an OPEN position	
T	SU/ COM	Perform a test to verify the failure position on loss (or simulated loss) of control signal or air to the following: • Exhauster shaft seal air regulator bypass valves - fail in an OPEN position	

3.9.2.9.1 LMP Melter Plenum High Pressure Interlock

Requirement: Upon detection of high melter plenum pressure (Melter 1 - LMP-PDT-1528/1529, Melter 2 - LMP-PDT-2528/2529), the interlock shall limit offgas generation rate from the affected melter and support offgas system flow by operating the valves (final elements listed below). Interlock shall terminate sources of melter pressurization if melter plenum pressure reaches or exceeds -0.1 in. W.G. relative to the annulus. Melter primary and secondary film cooler air emergency air inbleed valves shall open no sooner than 120 seconds after PPJ high plenum pressure trip terminating plant service air to the film coolers (to allow vacuum to be reestablished in melter if lost).

- Melter 1:
  - Shut film cooler air (LOP-YV-1129/1404)
  - Shut film cooler water (LOP-YV-1109/1405)
  - Shut WESP air (LOP-YV-1098/1161)
  - Open standby offgas line (LOP-YV-1008)
  - Open primary offgas film cooler air inbleed (LOP-YV-1401/1407)
  - Open standby offgas film cooler air inbleed (LOP-YV-1402/1406)
  - Open WESP outlet valve (LOP-FV-1140)
- Melter 2:
  - Shut film cooler air (LOP-YV-2129/2404)
  - Shut film cooler water (LOP-YV-2109/2405)
  - Shut WESP air (LOP-YV-2098/2161)
  - Open standby offgas line (LOP-YV-2008)
  - Open primary offgas film cooler air inbleed (LOP-YV-2401/2407)
  - Open standby offgas film cooler air inbleed (LOP-YV-2402/2406)
  - Open WESP outlet valve (LOP-FV-2140)

[Sections 4.4.4.1.1.3, 4.4.4.1.1.4, Appendix A Table A-1, LAW-DSA] (D.2)~~The LMP melter plenum high pressure interlock shall monitor the melter plenum header pressure and shall take the following actions upon detection of high plenum pressure:~~
~~Stop air and water flow to the associated primary and standby film coolers.~~
~~Open the associated primary and standby film cooler emergency air inbleeds.~~

~~Open the associated bypass valve from the standby film cooler to the SBS.~~
~~Stop air flow to the associated WESP.~~
~~[Appendix C Table C4-1, LAW PDSA] (D.2)~~

Basis Discussion: A high plenum pressure, identified by Melter Plenum High Pressure Interlock (LMP), indicates a loss of vacuum in the plenum, which could lead to a loss of offgas confinement. The interlock limits the release of radioactive and chemically hazardous material by reducing melter offgas load to restore plenum vacuum in the event vacuum is degraded. The plenum pressure is measured as differential pressure relative to the annulus.

[ALARA]
~~None.~~

Verification: Verification is expected to be achieved through the following:

Verif. Method	Verif. By	Plan	Notes/Comments
R	**ENG**	Review design for incorporation of the system specific interlock physical components.	Additional verification criteria including setpoint determination and testing for this interlock are established in the LMP SDD.
R	**ENG**	Review the design for incorporation of the interlock actions to open the melter primary and standby offgas film cooler air inbleed valves (LOP-YV-1401/-1402/-1406/-1407/-2401/-2402/-2406/-2407) no sooner than 120 seconds after termination of film cooler air	
T	**SU/ COM**	Perform a test to verify the interlock actions to open the melter primary and standby offgas film cooler air inbleed valves (LOP-YV-1401/-1402/-1406/-1407/-2401/-2402/-2406/-2407) no sooner than 120 seconds after termination of film cooler air.	Tested in conjuction with LMP tests
T	**SU/ COM**	Perform a test to verify the following functions are performed upon detection of high pressure (reduced vacuum) in the melter plenum: • Stops air and water flow to the associated primary and standby film coolers. • Opens the associated primary and standby film cooler emergency air inbleeds. • Opens the associated bypass valve from the standby film cooler to the SBS. • Stops air flow to the associated WESP.	The PPJ, LMP, and LOP systems are required to be operational to perform this test. Tested in conjunction with LMP tests

3.9.2.9.1.1 Failed LMP Melter Plenum High Pressure Interlocked Components (failed final control SIS elements)

Requirement: The interlocked components that can fail in a manner that causes a release shall fail to a safe position on loss of control signal or air. The PPJ melter film cooler air supply valve (LOP-YV-1129/1404, or LOP-YV-2129/2404) shall be designed to fail in a closed position on loss of control signal or loss of air to the valve. The PPJ melter film cooler water supply valve (LOP-YV-1109/1405, LOP-YV-2109/2405) shall be designed to fail in a closed position on loss of control signal or loss of air to the valve. The PPJ WESP purge air valve (LOP-YV-1098/1161, LOP-YV-2098/2161) shall be designed to fail in a closed position on loss of control signal or loss of air to the valve. The PPJ melter standby film cooler isolation valve (LOP-YV-1008 or LOP-YV-2008) shall be designed to fail in an open position on loss of control signal or loss of air to the valve. The PPJ

primary offgas film cooler air inbleed (LOP-YV-1401/1407, LOP-YV-2401/2407) shall be designed to fail in an open position. The PPJ standby offgas film cooler air inbleed (LOP-YV-1402/1406, LOP-YV-2402/2406) shall be designed to fail in an open position. The WESP outlet valve (LOP-FV-1140 or LOP-FV-2140) shall be designed to fail in an open position on loss of control signal or loss of air to the valve. [Sections 4.4.4.1.1.3, 4.4.4.1.1.4, Appendix A Table A-1, LAW-DSA]

Basis Discussion: In the event that control signal or air to an SIS component is lost, the failure position of these components limit the release of radioactive and chemically hazardous material by reducing the material at risk in the affected melter.

Verification: Verification is expected to be achieved through the following:

Verif. Method	Verif. By	Plan	Notes/Comments
R	ENG	Review the design for incorporation of the failure position on loss of control signal or air to the valve (s): • Melter 1 and 2 Film Cooler Wash Supply Valves – fail in CLOSED position • Melter 1 and 2 WESP Purge Air Valves – fail in a CLOSED position • Melter 1 and 2 Film Cooler Air Supply Valves – fail in a CLOSED position • Melter 1 and 2 Standby Film Cooler Isolation valves – fails in an OPEN position • Melter 1 and 2 Primary Film Cooler Emergency Air Inbleed Valves – fail in an OPEN position • Melter 1 and 2 Standby Film Cooler Emergency Air Inbleed Valves – fail in an OPEN position • Melter 1 and 2 Offgas Flow Control Valves – fail in an OPEN position	
T	SU/ COM	Perform a test to verify the failure position on loss (or simulated loss) of control signal or air to the valve (s): • Melter 1 and 2 Film Cooler Wash Supply Valves – fail in CLOSED position • Melter 1 and 2 WESP Purge Air Valves – fail in a CLOSED position • Melter 1 and 2 Film Cooler Air Supply Valves – fail in a CLOSED position • Melter 1 and 2 Standby Film Cooler Isolation valves – fails in an OPEN position • Melter 1 and 2 Primary Film Cooler Emergency Air Inbleed Valves – fail in an OPEN position • Melter 1 and 2 Standby Film Cooler Emergency Air Inbleed Valves – fail in an OPEN position • Melter 1 and 2 Offgas Flow Control Valves – fail in an OPEN position	

3.9.2.10.1 Loss of Normal Power to Safety Equipment Interlock~~UPE Loss of Normal Power Interlock (Exhausters)~~

3.9.2.10.1.1 Loss of Normal Power to Safety Equipment Interlock (Terminate Source of Melter Pressurization)

Requirement: Upon detection of loss of normal power (UPE-YY-2303/2403/2503), the interlock shall limit MAR and terminate sources of melter pressurization to both melters (Melter 1 - LOP-YV-1109/1405, Melter 2 - LOP-YV-2109/2405). interlock shall terminate sources of melter pressurization within 5 minutes of a sustained loss of power (maintains event duration within capacity of the UPE). [Sections 4.4.4.1.22.3, 4.4.4.1.22.4, Appendix A Table A-1, LAW-DSA] (D.2)

~~Normal power to the offgas exhausters shall be monitored by an interlock. Upon loss of normal power supply to the offgas exhausters, the following actions shall occur:~~

~~Stop ammonia and air supply into the ammonia/air dilution skid.~~

~~Bypass the mercury mitigation skid, the TCO skid, and the caustic scrubber.~~

~~Isolate power to the TCO skid heater.~~

~~Take the exhausters to a predetermined setting.~~

~~Stop air and water flow to the primary and standby film coolers for both melters.~~

~~Open the primary and standby film coolers emergency air inbleeds for both melters.~~

~~Reconfigure the WESP outlet valves to the fully open position for both melters.~~

~~Stop air flow to both WESPs.~~

~~Open the isolation valve to the bypass vacuum breaker.~~

~~Close the vessel vent header pressure control valve.~~

~~Open the bypass valve from the standby film coolers to the SBSs.~~

~~[Appendix C Table C4-1, LAW PDSA] (A.8.1) (D.2)~~

Basis Discussion: The interlock limits the release of radioactive and chemically hazardous material, in the event of loss of normal power, by terminating feed to both melters, stopping ammonia supply, and reconfiguring the offgas system in the event of a loss of normal power.

Verification: Verification is expected to be achieved through the following:

Verif. Method	Verif. By	Plan	Notes/Comments
R	**ENG**	Review design for incorporation of the system specific interlock physical components.	
T	**SU/ COM**	Perform a test to demonstrate that within 5 minutes of detection of sustained loss of normal power (UPE-YY-2303/-2403/-2503), the interlock performs the following and maintains event duration within capacity of the UPE: • Close Film cooler water valves	

3.9.2.10.1.2 Loss of Normal Power to Safety Equipment Interlock (Reduce Pressurized Air Sources)

Requirement: Upon detection of loss of normal power (UPE-YY-2303/2403/2503), the interlock shall reduce pressurized air sources to both primary offgas systems and support offgas system flow (final elements listed

below). The interlock shall terminate film cooler air and WESP air within 5 minutes of a sustained loss of power (maintains event duration within capacity of the UPE). The interlock shall open melter primary and standby offgas film cooler air inbleed valves no sooner than 80.5 seconds after detection of the loss-of-power condition (to allow vacuum to be re-established in melter if lost).

- Close film cooler air valves (Melter 1 - LOP-YV-1129/1404, Melter 2 - LOP-YV-2129/2404)
- Close WESP air valves Melter 1 - (LOP-YV-1098/1161, Melter 2 - LOP-YV-2098/2161)
- Open melter primary offgas film cooler air inbleed valves (Melter 1 - LOP-YV-1401/1407, Melter 2 - LOP-YV-2401/2407))
- Open standby offgas film cooler air inbleed valves (Melter 1 - LOP-YV-1402/1406, Melter 2 - LOP-YV-2402/2406)

[Sections 4.4.4.1.22.3, 4.4.4.1.22.4, Appendix A Table A-1, LAW-DSA] (D.2)

Basis Discussion: The interlock limits the release of radioactive and chemically hazardous material, in the event of loss of normal power, by terminating feed to both melters, stopping ammonia supply, and reconfiguring the offgas system in the event of a loss of normal power.

Verification: Verification is expected to be achieved through the following:

Verif. Method	Verif. By	Plan	Notes/Comments
R	ENG	Review design for incorporation of the system specific interlock physical components.	
T	SU/ COM	Perform a test to demonstrate that within 5 minutes of detection of sustained loss of normal power (UPE-YY-2303/-2403/-2503), the interlock performs the following and maintains event duration within capacity of the UPE: • Close film cooler air valves • Close WESP air valves • Open melter primary and standby offgas film cooler air inbleed valves no sooner than 80.5 sec after termination of film cooler air (to allow vacuum to be re-established in melter if lost).	

3.9.2.10.1.3 Loss of Normal Power to Safety Equipment Interlock (Reduce Exhauster Suction Load)

Requirement: Upon detection of loss of normal power (UPE-YY-2303/2403/2503), the interlock shall reduce exhauster suction load (final elements listed below). The interlock shall reduce suction loads within 5 minutes of a sustained loss of power (maintains event duration within capacity of the UPE).

- Open standby offgas line valve (LOP-YV-1008/2008)
- Open WESP outlet valve (LOP-FV-1140/2140)
- Close vessel vent isolation valve (LVP-PV-0072)
- Open carbon bed bypass valve (LVP-YV-0403)
- Open SCO/SCR bypass valve (LVP-YV-0501)
- Open caustic scrubber bypass valve (LVP-YV-0097)

[Sections 4.4.4.1.22.3, 4.4.4.1.22.4, Appendix A Table A-1, LAW-DSA] (D.2)

Basis Discussion: The interlock limits the release of radioactive and chemically hazardous material, in the event of loss of normal power, by terminating feed to both melters, stopping ammonia supply, and reconfiguring the offgas system in the event of a loss of normal power.

Verification: Verification is expected to be achieved through the following:

Verif. Method	Verif. By	Plan	Notes/Comments
R	ENG	Review design for incorporation of the system specific interlock physical components.	
T	SU/ COM	Perform a test to demonstrate that within 5 minutes of detection of sustained loss of normal power (UPE-YY-2303/-2403/-2503), the interlock performs the following and maintains event duration within capacity of the UPE: • Open standby offgas line valve • Open WESP outlet valve • Close vessel vent isolation valve • Open carbon bed bypass valve • Open SCO/SCR bypass valve prior to the caustic scrubber bypass valve • Open caustic scrubber bypass valve	

3.9.2.10.1.4 Loss of Normal Power to Safety Equipment Interlock (Reduce Sources of Heat and Air in Secondary Offgas)

Requirement: Upon detection of loss of normal power (UPE-YY-2303/2403/2503), the interlock shall reduce sources of heat and air in the secondary offgas system (final elements listed below). Actuate interlock such that the sources of heat load and air are in the offgas system are reduced within 5 minutes of a sustained loss of power (maintains event duration within capacity of the UPE).

- Close SCO/SCR dilution air supply valve (LVP-YV-0538)
- Close ammonia supply valve (LVP-YV-0528/0560)
- Turn off SCO/SCR heater control contactor (LVP-CTR-00002)

[Sections 4.4.4.1.22.3, 4.4.4.1.22.4, Appendix A Table A-1, LAW-DSA] (D.2)

Basis Discussion: The interlock limits the release of radioactive and chemically hazardous material, in the event of loss of normal power, by terminating feed to both melters, stopping ammonia supply, and reconfiguring the offgas system in the event of a loss of normal power.

Verification: Verification is expected to be achieved through the following:

Verif. Method	Verif. By	Plan	Notes/Comments
R	ENG	Review design for incorporation of the system specific interlock physical components.	
T	SU/ COM	Perform a test to demonstrate that within 5 minutes of detection of sustained loss of normal power (UPE-YY-2303/-2403/-2503), the interlock performs the following and maintains event duration within capacity of the UPE: • Close SCO/SCR dilution air supply valve • Close ammonia supply valve • Turn off SCO/SCR heater control	

3.9.2.10.1.5 Loss of Normal Power to Safety Equipment Interlock (Fix Exhauster Speed)

Requirement: Upon detection of loss of normal power (UPE-YY-2303/2403/2503), the interlock shall restrict the exhausters to a speed compatible with the reduced offgas load (final elements listed below). The interlock shall set the exhausters to a fixed speed and open vacuum breaker line valves within 5 minutes of a sustained loss of power (maintains event duration within capacity of the UPE).

- Set exhauster(s) to fixed 2020RPM speed (LVP-EXHR-00001A [LVP-YC-0023B], LVP-EXHR-00001B [LVP-YC-0020B], and LVP-EXHR-00001C [LVP-YC-0017B])
- Open vacuum breaker line valves (LVP-YV-0453/0454)

[Sections 4.4.4.1.22.3, 4.4.4.1.22.4, Appendix A Table A-1, LAW-DSA] (D.2)

Basis Discussion: The interlock limits the release of radioactive and chemically hazardous material, in the event of loss of normal power, by terminating feed to both melters, stopping ammonia supply, and reconfiguring the offgas system in the event of a loss of normal power.

Verification: Verification is expected to be achieved through the following:

Verif. Method	Verif. By	Plan	Notes/Comments
R	ENG	Review design for incorporation of the system specific interlock physical components.	
T	SU/ COM	Perform a test to demonstrate that within 5 minutes of detection of sustained loss of normal power (UPE-YY-2303/-2403/-2503), the interlock performs the following and maintains event duration within capacity of the UPE: • Set exhauster(s) to fixed speed • Open vacuum breaker line valves	

3.9.2.10.1.6 Failed Loss of Normal Power to Safety Equipment Interlocked Components (failed final control SIS elements)

Requirement: The interlocked components that can fail in a manner that causes a release shall fail to a safe position on loss of control signal or air. The PPJ melter film cooler air supply valve (LOP-YV-1129/1404, LOP-YV-2129/2404) shall be designed to fail in a closed position on loss of control signal or loss of air to the valve. The PPJ melter film cooler water supply valve (LOP-YV-1109/1405, LOP-YV-2109/2405) shall be designed to fail in a closed position on loss of control signal or loss of air to the valve. The PPJ WESP purge air valve (LOP-YV-1098/1161, LOP-YV-2098/2161) shall be designed to fail in a closed position on loss of control signal or loss of air to the valve. The PPJ melter standby film cooler isolation valve (LOP-YV-1008 or LOP-YV-2008) shall be designed to fail in an open position on loss of control signal or loss of air to the valve. The PPJ melter 1 and 2 primary film cooler emergency air inbleed valve (LOP-YV-1401/1407, LOP-YV-2401/2407) shall be designed to fail in an open position on loss of control signal or loss of air to the valve. The PPJ melter standby film cooler emergency air inbleed valve (LOP-YV-1402/1406, LOP-YV-2402/2406) shall be designed to fail in an open position on loss of control signal or loss of air to the valve. The PPJ melter offgas flow control valve (LOP-FV-1140 or LOP-FV-2140) shall be designed to fail in an open position on loss of control signal or loss of air to the valve. The PPJ carbon bed adsorber bypass valve (LVP-YV-0403) shall be designed to fail in an open position on loss of control signal or loss of air to the valve. The thermal catalytic oxidizer skid bypass valve (LVP-YV-0501) shall be designed to fail in an open position on loss of control signal or loss of air to the valve. The PPJ ammonia dilution air supply valve (LVP-YV-0538) shall be designed to fail in a closed position on loss of control signal or loss of air to the valve. The PPJ ammonia dilution ammonia supply valve (LVP-YV-0528/0560) shall be designed to fail in a closed position on loss of control signal or loss of air to the valve. The thermal catalytic oxidizer heater

contactor (LVP-CTR-00002) shall be designed to fail in an off position on loss of control signal to the heater. The caustic scrubber bypass valve (LVP-YV-0097) shall be designed to fail in an open position on loss of control signal or loss of air to the valve. The vacuum breaker line valve (LVP-YV-0453/0454) shall be designed to fail in an open position on loss of control signal or loss of air to the valve. The offgas exhauster adjustable speed drive (LVP-ASD-00001A, B, C) shall be designed to fail in a minimum fixed speed position, that will maintain the melter 1 and 2 plenums under vacuum, on loss of control signal to the drive. [Sections 4.4.4.1.22.3, 4.4.4.1.22.4, Appendix A Table A-1, LAW-DSA]

Basis Discussion: By preventing the final control elements of the SIS from failing in a manner that would cause a release, the failure position of these components reduces the probability of a release of radioactive and chemically hazardous material.

Verification: Verification is expected to be achieved through the following:

Verif. Method	Verif. By	Plan	Notes/Comments
R	ENG	Review the design for incorporation of the failure position on loss of control signal or air to the valve (s): • Melter film cooler air supply valves - fail in a CLOSED position • Melter film cooler water supply valves - fail in a CLOSED position • WESP purge air valves - fail in a CLOSED position • Melter standby film cooler isolation valve - fails in an OPEN position • Melter 1 and 2 primary film cooler emergency air inbleed valves - fail in an OPEN position • Melter standby film cooler emergency air inbleed valves - fail in an OPEN position • Melter offgas flow control valve - fails in an OPEN position • Carbon bed adsorber bypass valve - fails in an OPEN position • Thermal catalytic oxidizer skid bypass valve - fails in an OPEN position • Ammonia dilution air supply valves - fail in a CLOSED position • Ammonia dilution ammonia supply valves - fail in a CLOSED position • Thermal catalytic oxidizer heater - fails in an OFFposition • Caustic scrubber bypass valve - fails in an OPEN position • Vacuum Breaker Line Valves - fail in an OPEN position • Offgas exhausters - fail in a minimum FIXED speed position	

T	**SU/ COM**	Perform a test to verify the failure position on loss (or simulated loss) of control signal or air to the valve (s): • Melter film cooler air supply valves - fail in a CLOSED position • Melter film cooler water supply valves - fail in a CLOSED position • WESP purge air valves - fail in a CLOSED position • Melter standby film cooler isolation valve - fails in an OPEN position • Melter 1 and 2 primary film cooler emergency air inbleed valves - fail in an OPEN position • Melter standby film cooler emergency air inbleed valves - fail in an OPEN position • Melter offgas flow control valve - fails in an OPEN position • Carbon bed adsorber bypass valve - fails in an OPEN position • Thermal catalytic oxidizer skid bypass valve - fails in an OPEN position • Ammonia dilution air supply valves - fail in a CLOSED position • Ammonia dilution ammonia supply valves - fail in a CLOSED position • Thermal catalytic oxidizer heater - fails in an OFFposition • Caustic scrubber bypass valve - fails in an OPEN position • Vacuum Breaker Line Valves - fail in an OPEN position • Offgas exhausters - fail in a minimum FIXED speed position	

3.9.2.11 ~~Analyzer Room High Temperature Interlock~~Deleted

~~**Requirement:** The analyzer room high temperature interlock shall activate to de-energize significant, non-safety electrical loads in the analyzer room (L-304G) upon detection of abnormally high room temperature. [Appendix C Table C4-1, LAW PDSA] (D.2)~~

~~**Basis Discussion:** The analyzer room high temperature interlock prevents the release of melter offgas into the LAW Vitrification Building from failed offgas analyzer tubing by de-energizing significant electrical loads in the analyzer room when the melter offgas system is reconfigured. The interlock is needed during an event that causes room cooling to fail, but the electrical components in the room continue to operate causing high temperatures. The interlock monitors the temperature in the offgas analyzer room (L-0304G). When the room temperature approaches a value that would exceed the environmental qualification for the analyzers, the interlock activates to open electrical contactors that supply power to the non-safety analyzer cabinets in the room. The PPJ de-energizes the control power to the relays holding the electrical contactors shut, triggering these contactors to their safe state.~~

~~An initiator that would cause the offgas system to reconfigure is the seismic event that causes a loss of normal power to the exhausters. The seismic event can also cause a failure of the cooling/HVAC to the room, thus, causing the high temperature in the room. Once the offgas system is reconfigured by the header pressure interlock or the loss of normal power interlock, the exhauster fans are set to a fixed speed. This fixed speed is enough to pull a vacuum on the melter but not enough to fail the offgas confinement boundary. However, if the tubing of the offgas analyzers fail, the in-leakage into the melter offgas system in the reconfigured mode could overwhelm the~~

~~vacuum drawn by the exhauster at a fixed speed. This is because a certain amount of air in-leakage due to seismic line break has already been accounted for. With this additional air in-leakage, the system would be outside its analyzed condition and the exhauster may not be pulling enough to ensure a vacuum is retained in the melter.~~

~~**Verification:** Verification is expected to be achieved through the following:~~

~~Verif. Method~~	~~Verif. By~~	~~Plan~~	~~Notes/Comments~~
~~A~~	~~ENG~~	~~Perform analyses to determine which electrical loads are to be shed and to determine the high temperature setpoint.~~	
~~R~~	~~ENG~~	~~Review the control logic design to verify compliance with the analysis.~~	~~May be documented in an evaluation/assessment~~
~~T~~	~~SU/COM~~	~~Perform a test to demonstrate that with high temperatures (as determined in the analysis) in the analyzer room the above identified electrical loads are shed.~~	

3.9.2.12 Process Monitoring for the Dangerous Waste Permit

Verification: Verification is expected to be achieved through the following:

Verif. Method	Verif. By	Plan	Notes/Comments
R	ENG	Review design to verify the capability of remotely monitoring vessel pressure and measuring effluent level.	
~~T~~	~~SU/ COM~~	~~Perform a test to verify the capability of remotely monitoring LOP/LVP vessels pressure and effluent level.~~	

3.9.2.15 Pneumatic Permissive

3.9.2.15.1 Pneumatic Permissive for SCO/SCR skid Bypass Valves

Requirement: The pneumatic permissive shall prevent the caustic scrubber bypass valve (LVP-YV-0097) from opening while the SCO/SCR skid bypass valve (LVP-YV-0501) is closed. Independent of PPJ time delay, the SCO/SCR skid bypass (LVP-YV-0501) shall begin to open before or at the same time as the caustic scrubber bypass valve (LVP-YV-0097) begins to open. Independent of PPJ time delay, the SCO/SCR skid bypass (LVP-YV-0501) shall be in its end state open position prior to the caustic scrubber bypass valve (LVP-YV-0097) reaching its end state open position. [Sections 4.4.3.15.3,4.4.3.15.4 Appendix A Table A-1, LAW-DSA]

Basis Discussion: The pneumatic permissive reduces the probability of a release of radioactive and chemically hazardous material by preventing a failure of the offgas confinement boundary or exhausters from offgas high temperatures.

Verification: Verification is expected to be achieved through the following:

Verif. Method	Verif. By	Plan	Notes/Comments
R	ENG	Review design to verify a pneumatic permissive for the SCO/SCR skid bypass valve (LVP-YV-0501) • Opens before or at the same time the scrubber bypass valve (LVP-YV-0097) begins to open	

Verif. Method	Verif. By	Plan	Notes/Comments
		• Be in its end state open position prior to the caustic scrubber bypass valve (LVP-YV-0097) reaching its end state open position	
T	SU/ COM	Test to verify that the pneumatic permissive for the SCO/SCR skid bypass valve (LVP-YV-0501) • Opens before or at the same time the scrubber bypass valve (LVP-YV-0097) begins to open • Be in its end state open position prior to the caustic scrubber bypass valve (LVP-YV-0097) reaching its end state open position	

3.9.2.15.2 Pneumatic Permissive for Carbon Bed Adsorber Bypass Valves

Requirement: The pneumatic permissive shall prevent the carbon bed adsorber inlet valves (LVP-YV-0407, LVP-YV-0415, LVP-YV-0449) from closing while the carbon bed adsorber bypass valve (LVP-YV-0403) is closed. Independent of PPJ time delay, the carbon bed adsorber bypass valve (LVP-YV-0403) shall begin to open before or at the same time as the carbon bed adsorber inlet valves (LVP-YV-0407, LVP-YV-0415, LVP-YV-0449) begin to close. Independent of PPJ time delay, the carbon bed adsorber bypass valve (LVP-YV-0403) shall be in its end state open position prior to the carbon bed adsorber inlet valves (LVP-YV-0407, LVP-YV-0415, LVP-YV-0449) reaching their end state closed position. [Sections 4.4.3.15.3,4.4.3.15.4 Appendix A Table A-1, LAW-DSA]

Basis Discussion: The pneumatic permissive reduces the probability of a release of radioactive and chemically hazardous material by preventing a failure of the offgas confinement boundary or exhausters from offgas high temperatures.

Verification: Verification is expected to be achieved through the following:

Verif. Method	Verif. By	Plan	Notes/Comments
R	ENG	Review design to verify a pneumatic permissive for the carbon bed adsorber bypass valve (LVP-YV-0403) • Opens before or at the same time the carbon bed adsorber inlet valves (LVP-YV-0407, LVP-YV-0415, LVP-YV-0449) begins to close • Be in its end state open position prior to the carbon bed adsorber inlet valves (LVP-YV-0407, LVP-YV-0415, LVP-YV-0449) reaching their end state closed position	
T	SU/ COM	Test to verify that the pneumatic permissive for the carbon bed adsorber bypass valve (LVP-YV-0403) • Opens before or at the same time the carbon bed adsorber inlet valves (LVP-YV-0407, LVP-YV-0415, LVP-YV-0449) begins to close • Be in its end state open position prior to the carbon bed adsorber inlet valves (LVP-YV-0407, LVP-YV-0415, LVP-YV-0449) reaching their end state closed position	

3.10.2.1 Function of the Stack

Requirement: The offgas shall have a continuous flowpath to an elevated release point. The LVP exhauster stack height shall be at least 198.5 ft. [Sections 4.4.3.1.3, 4.4.3.1.4, Appendix A Table A-1, LAW-DSA] (A.8)~~The LOP and LVP systems exhaust stack must be of sufficient height to provide a release elevation. [Appendix C Table C4-1, LAW PDSA] (A.8)~~

Basis Discussion: The confinement boundary mitigates the release of radioactive and chemically hazardous material by providing a primary release pathway from the melter through the melter offgas system exhausters and to the stack exit. [ALARA]

Verification: Verification is expected to be achieved through the following:

Verif. Method	Verif. By	Plan	Notes/Comments
A	**ENG**	Perform an analysis to determine the appropriate stack height (minimum of 198.5 ft) for a satisfactory release elevation.	
R	**ENG**	Review design to verify alignment with analysis.	May be documented in assessment/evaluation report.

3.10.2.2 Offgas Confinement Boundary Manual Valves

Requirement: The offgas shall be provided with a continuous flowpath. Offgas confinement boundary manual valves required for operation mode shall be locked in the open position. [Section 4.4.3.1.3, 4.4.3.1.4, Appendix A Table A-1, LAW-DSA]

Basis Discussion: The confinement boundary mitigates the release of radioactive and chemically hazardous material by providing a primary release pathway from the melter through the melter offgas system exhausters and to the stack exit. [ALARA]

Verification: Verification is expected to be achieved through the following:

Verif. Method	Verif. By	Plan	Notes/Comments
R	**ENG**	Review design to verify that manual valves within the offgas confinement boundary are identified as locked open to ensure a continuous flowpath.	

3.10.2.3 Valves (LOP-FV-1140 and LOP-FV-2140) Design (WESP Modulating Valves)

Requirement: The WESP modulating valves shall be designed with a physical stop in order to prevent full-closure and maintain offgas system vacuum in upstream component. The WESP modulating valves mechanical stops on the actuator shall be designed such that the valve can be no less than 15% open. [Sections 4.4.3.11.3, 4.4.3.11.4, Appendix A Table A-1, LAW-DSA]

Basis Discussion: WESP modulating valves mechanical stops ensures the valve cannot fail fully closed.

Verification: Verification is expected to be achieved through the following:

Verif. Method	Verif. By	Plan	Notes/Comments
R	ENG	Review design to verify that WESP modulating valves (LOP-FV-1140 and LOP-FV-2140) have mechanical stops on the actuator such that the valve can be no less than 15% open.	

3.10.2.4 Stack Drain Line Restriction Orifice (LVP-RO-00002)

Requirement: LVP-RO-00002 shall maintain return flow through the stack condensate drain less than a level that will overwhelm the ability of the LVP exhausters to maintain melter vacuum. LVP-RO-00002 shall limit the flow to no greater than 3.9 SCFM of air. [Sections 4.4.3.18.3, 4.4.3.18.4, Appendix A Table A-1, LAW-DSA]

Basis Discussion: By limiting offgas return flow from the stack condensate drain, it mitigates the release of radioactive and chemically hazardous material.

Verification: Verification is expected to be achieved through the following:

Verif. Method	Verif. By	Plan	Notes/Comments
R	ENG	Review design to verify that LVP-RO-00002 limits flow to no greater than 3.9 SCFM of air.	
T	SU/ COM	Test to verify that LVP-RO-00002 limits flow to no greater than 3.9 SCFM of air.	

3.10.2.5 Vessel Vent Restriction Orifice (LVP-RO-00001)

Requirement: LVP-RO-00001 shall maintain vessel vent header in-flow to the LVP header less than a level that will overwhelm the ability of the LVP exhausters to maintain melter vacuum. LVP-RO-00001 shall limit the flow to no greater than 26.7 scfm. [Sections 4.4.3.19.3, 4.4.3.19.4, Appendix A Table A-1, LAW-DSA]

Basis Discussion: Limiting air ingress to the offgas system through the vessel vent header mitigates a release of radioactive and chemically hazardous material.

Verification: Verification is expected to be achieved through the following:

Verif. Method	Verif. By	Plan	Notes/Comments
R	ENG	Review design to verify that LVP-RO-00001 limits flow to no greater than 26.7 scfm.	
T	SU/ COM	Test to verify that LVP-RO-00001 limits flow to no greater than 26.7 scfm.	

3.10.4.14 Valves Damage from Water Hammers

Verification: Verification is expected to be achieved through the following:

Verif. Method	Verif. By	Plan	Notes/Comments
~~A~~	~~ENG~~	~~Perform an analysis to determine the stroke timing of the valves for the valves that would cause a water hammer.~~	
R	ENG	Review design to verify the valve stroke time conforms to engineering study ~~automatic valve operator closure devices are sufficiently slow to prevent water hammer~~.	
~~T~~	~~SU/ COM~~	~~Perform a test to verify valve closure time meets the acceptance range to prevent water hammer~~	

3.12.1 Codes of Record

Table 3-37 LOP and LVP Applicable Codes and Standards

Implementing Codes and Standards: [EPC Code of Record]	
Document Number	**Title**
WAC 246-247-040	*Radiation Protection—Air Emissions – General Standards*

[1] The LAW Facility ~~PDSA~~DSA specifies that design of selected portions of the LOP/LVP system per this code or standard is a credited design feature to help ensure the robustness of the design in support of the nuclear safety hazards analysis and selection of controls.
[2] This code or standard from the SRD applies to components of the LOP/LVP system that have a safety function.

4 System Description

4.1.1 Description of System, Subsystems, and Major Components

The LOP portion of the offgas system consists of the following major components:

- Film coolers and offgas
- SBS vessels (LOP-SCB-00001/00002)
- SBS condensate collection vessels (LOP-VSL-00001/00002)
- WESPs (LOP-WESP-00001/00002)

The LVP portion of the offgas system consists of the following major components.

- HEPA filter electric preheaters (LVP-HTR-00001A/00001B/00003A/00003B) – note: LVP heaters LVP-HTR-00001B/-00003B are abandonded in-place.
- HEPA filters (LVP-HEPA-00001A/00002A/00003A) and an auxiliary train (LVP-HEPA-00001B/00002B)
- Mercury mitigation equipment skid (LVP-SKID-00001)
  - Activated carbon adsorber vessels (LVP-ADBR-00001A/00001B)
- SCO/SCR skid (LVP-SKID-00002)
  - Recuperative heat exchanger (LVP-HX-00001)
  - Electric heater (LVP-HTR-00002)
  - SCO (LVP-SCO-00001)
  - SCR (LVP-SCR-00001)

- Ammonia dilution skid (LVP-SKID-00003)
- Caustic scrubber (LVP-SCB-00001)
- Exhausters (LVP-EXHR-00001A/00001B/00001C)

Associated piping, valves, and interfaces with other systems are described with each major piece of equipment.

4.1.1.1.3 Submerged Bed Scrubbers

Water vapor in the melter offgas condenses in the SBS. The SBS vessel has two overflow pipes to its associated SCV (LOP-VSL-00001/~~0000~~00002). Centrifugal pumps recirculate liquid from the SCV back to the SBS through piping and valves in bulge LOP-BULGE-00001/00002. The liquid is recirculated through a distribution header with lances in the bottom of the SBS vessel. The recirculated liquid lofts solids off the bottom of the dished vessel and directs them toward the bottom center of the vessel, so the solids can be drawn into the pickup line of the SBS water purge pumps (LOP-PMP-00003A/00003B for LOP-SCB-00001; LOP-PMP-00006A/00006B for LOP-SCB-00002). The intake for the self-priming water purge pumps is located just off the bottom center of the vessel. The second water purge pump is provided for redundancy. Periodically, one of the water purge pumps is turned on to remove a portion of the liquid (with entrained solids) from the vessel. This prevents a buildup of solids in the vessel over time.

4.1.1.1.4 Submerged Bed Scrubber Condensate Vessels and Valve Bulge

Figure 4-5 Submerged Bed Scrubber Circulation

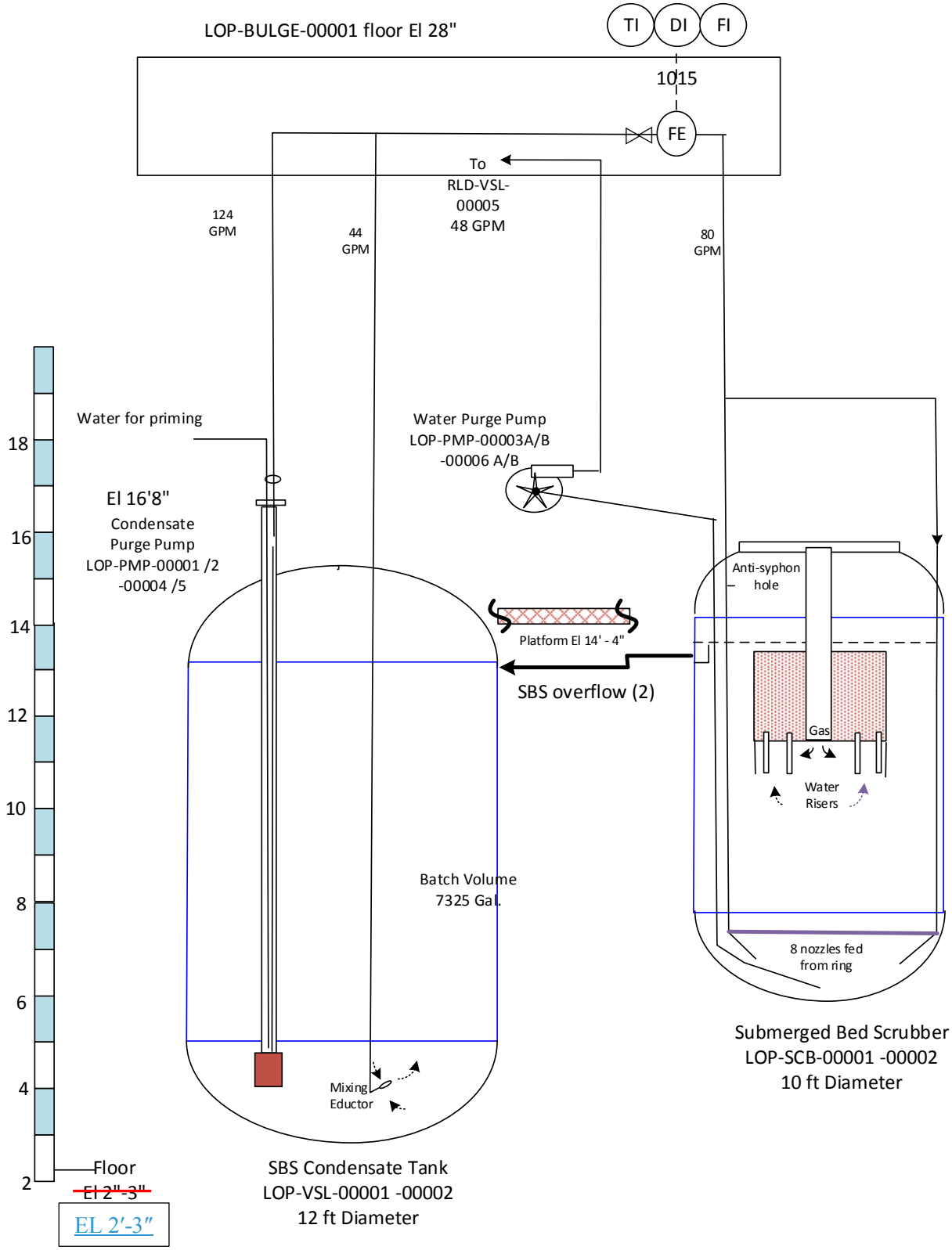

4.1.1.2.1 High-Efficiency Particulate Air Electric Preheaters

Refer to P&ID: 24590-LAW-M6-LVP-00001002

The combined offgas stream from the two LOP sides is split downstream from the LVP header and each stream is passed through one of two parallel normal process offgas heaters (LVP-HTR-00001A or LVP-HTR-00003A). These normal process offgas heaters utilize electric heating elements to increase the gas temperature of the combined offgas stream at least 18°F from a nominal 131°F to 149°F to decrease relative humidity of the offgas and prevent condensation in downstream components, particularly the HEPA filters. Sizing of these heaters is such that if one of them fails, the other unit can maintain the combined stream offgas required temperature increase. The normal heaters have a duty of ~~75~~ 25 kW nonsafety. Calculation 24590-LAW-MEC-LVP-00004 demonstrates that the preheaters LVP-HTR-00001B and LVP-HTR-00003B (formerly safety heaters) are not required to maintain offgas temperatures and have been abandoned in-place. The power to these heaters has been disconnected but the units have been left in-place to maintain the confinement boundary.~~In addition to these normal process heaters, safety heaters (LVP-HTR-00001B and LVP-HTR-00003B) are installed in series, one series with each process heater. Each of the Safety heaters are made up of three 13 kW heater elements (39 kW total per safety heater). Each of these elements can be turned on individually by the PPJ system as needed to maintain the required combined stream offgas differential temperature. These safety heaters are only activated if the normal process heaters fail to maintain the requisite combined stream temperature, or can be operated with the UPS system, same units as exhausters, in the event of a loss of normal power.~~ (Refer to Figure 4-8~~Figure 4-8Figure 4-8~~.)

Figure 4-8 LVP HEPA Preheater and HEPA Filter Arrangement Drawing

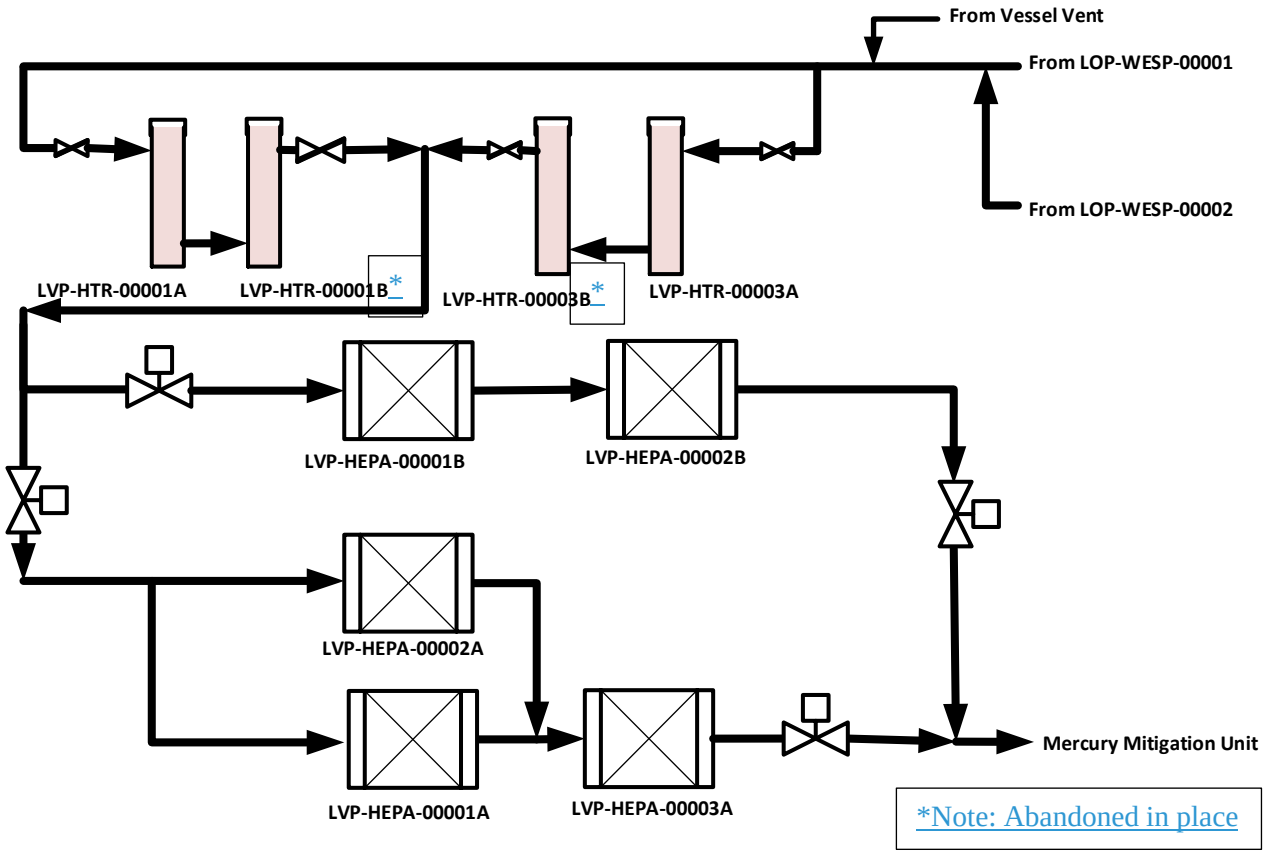

4.1.1.2.3 High-Efficiency Particulate Air Filters

The bypass valve and isolation valves are designated SS to ensure reliable function in various postulated accident scenarios. The butterfly valves are air actuated. The inlet ~~and outlet~~ valves on each adsorber vessel are normally-open and fail-closed and normally-open and fail-closed, depending on the adsorber lead/lag configuration. The bypass valve around the skid is normally closed and fail-open. The valves are dual purpose, meaning they are used to isolate and bypass the beds for both normal maintenance activities (such as adsorbent media change out or discharge filter replacement) and to respond to various accident conditions. Under accident conditions, the PPJ system overrides normal PCJ control of the valves.

4.1.1.2.4 Selective Catalytic Oxidizer and Reducer Skid and Ammonia Dilution Skid

Refer to ~~P&IDs~~P&ID: 24590-LAW-M6-LVP-00005002

Refer to calculation: 24590-CD-POC-MBT0-00007-02-00001 (mass/energy balance)

Refer to ~~datasheets~~datasheet: 24590-LAW-MKD-LVP-00012

The SCO/SCR skid is approximately 44-ft. long by 9 ft. wide by 13 ft. high and is in room ~~L-0304 °F~~L-0304F at elevation +48 ft. (24590-CD-POC-MBT0-00007-03-00001, *Data Sheet - Mechanical Data Sheet, LAW Catalytic Oxidizer/Reducer*). The SCO/SCR unit is a combination of rectangular modules. Each module is a rectangular box with formed angle stiffeners welded to the outside perimeter. The housings connect to the associated ductwork via rectangular plate flanges.

4.1.1.2.4.2 Electric Heater

Downstream from the recuperative heat exchanger, the electric heater is used to heat the offgas to the desired temperature of 750°F for optimum operation of the SCO. The housing is approximately 14 ft. ~~by~~ 9 in. long by 4 ft. 4 in. wide by 33 in. high. Five replaceable heating element blocks (manufactured by CCI Thermal Technologies, Inc.) are evenly spaced along the length of the heater housing. The heating blocks are installed in flanged openings in the side of the heater housing. The heater contains thermal monitoring instruments and active electrical controls. The duty of the 480 VAC Incoloy-800 heater is 310 kW. It has a normal operating temperature of 750°F and a maximum and design limit temperatures of 805 and 850°F respectively.

4.1.6.1.1.3 Control Actions

SBS – Melter 1

Chilled water flows to the SBS coils and jacket are modulated by LOP-TV-1013A and LOP-TV-1013B, respectively, in response to SBS temperature LOP-TI-1013 (°F). A set of pressure relief valves protect each circuit: LOP-PSV-1149 and LOP-PSV-~~1184~~ 1084 on the coils, and LOP-PSV-1150 and LOP-PSV-~~1186~~ 1086 on the jacket.

SBS – Melter 2

Chilled water flows to the SBS coils and jacket are modulated by LOP-TV-2013A and LOP-TV-2013B, respectively, in response to SBS temperature LOP-TI-2013 (°F). A set of pressure relief valves protect each circuit: LOP-PSV-2149 and LOP-PSV-~~2184~~ 2084 on the coils, and LOP-PSV-2150 and LOP-PSV-~~2186~~ 2086 on the jacket.

4.1.6.2.2 HEPA Preheater, and HEPA Filter Control Features

The following sections describe the system indications, alarms, and system control features associated with the HEPA preheaters (LVP-HTR-00001A/~~00001B/~~00003A~~/00003B~~), and HEPA filters (LVP-HEPA-00001A/00002A/00003A and LVP-HEPA-00001B/00002B), as depicted on P&IDs 24590-LAW-M6-LVP-00001001, 24590-LAW-M6-LVP-00001002, and 24590-LAW-M6-LVP-00001003, *P&ID - LAW - LAW Secondary Offgas/Vessel Vent Process System HEPA Filters*.

The LVP HEPA preheaters raise the offgas temperature sufficiently to ensure the offgas will not condense any water while passing through the HEPA filters. The HEPA filters provide for the retention of fine particles including radioactive material to minimize radioactive contamination throughout the remainder of the LVP system.

4.1.6.2.3.2 Control Capability and Locations

The following components are manually operated during normal operations and are operated locally (at the panel/component).

- Butterfly valves (LVP-V-01538, LVP-V-01539) – These valves are manually controlled at the adsorber units and are used for swapping the lead and lag position of the adsorber units. Swapping the position of these valves is coordinated with the positioning of the actuated inlet and manual outlet valves (valves LVP-YV-0407/0415 and LVP-V-01540/01537~~LVP-YV-0449/0450~~) to ensure the proper flowpath through the units.

- Manual butterfly valve~~s~~ LVP-V-~~01647/~~01648 – ~~These valves~~This valve can be used to isolate the mercury mitigation skid from the offgas stream for maintenance. The valve~~s~~ would be used in conjunction with ~~PCJ-actuated~~ valves LVP-V-01540/01537~~YV-0407/0415/0449/0450~~ to provide double isolation of the adsorber units. Valve~~s~~ LVP-V-~~01647/~~01648 ~~are~~ is required to be locked open except during planned maintenance, as closing these valves would block the discharge path from the adsorber vessel pressure relief rupture disks (LVP-PSE-0447/0448).

4.1.6.2.3.3 Automatic and Manual Actions

Skid Inlet, Outlet and Bypass Valves. The skid inlet valves (LVP-YV-0407, LVP-YV-0415, LVP-YV-0449)~~, outlet valves (LVP-YV-0449, LVP-YV-0450),~~ and skid bypass valve (LVP-YV-0403) are dual-control valves—meaning they can be closed or opened by the PCJ or by the PPJ system. The valves are normally controlled manually and remotely using the PCJ. The valves can be separately lined up, as desired, to isolate the adsorber units for maintenance or to swap lead and lag position for the two adsorber units. The PCJ permissive interlocks prevent the valves from being opened or closed in a sequence that could inadvertently block offgas flow (refer to Section 4.1.6.2.2.5). Outlet valves (LVP-V-01540, LVP-V-01537) are normally closed and locked open manual butterfly valves, respectively.

4.1.6.2.3.4 Setpoints and Ranges

The setpoints and ranges for the SS interlocks described in Section 4.1.6.2.3.5 (Mercury Mitigation Skid High DP Interlock, High Inlet Temperature Interlock, and High Differential Carbon Oxide Interlock) are provided in the LAW ~~PDSA~~DSA.

4.1.6.2.3.5 Interlocks, Bypasses, and Permissives

Upon detection of high differential carbon monoxide or carbon dioxide concentration ~~(setpoint **TBD**)~~ across the skid, the interlock:

- Opens the mercury mitigation skid bypass valve (LVP-YV-0403).
- Closes the offgas inlet valves (LVP-YV-0407, LVP-YV-0415, LVP-YV-0449) ~~and outlet valves (LVP-YV-0449, LVP-YV-0450)~~ of both carbon bed adsorbers.
- Terminates feed to the operating melter(s) (LFP system). The method of feed termination is by first isolating plant service air to the melter feed ADS pumps, followed by isolation of demineralized water (after line flushes) to the ADS pumps. First, the air supply line to the melter feed ADS pumps is isolated (valve LFP-YV-1208 is closed to the ADS pumps to melter 1 and valve LFP-YV-2208 is closed to the ADS pumps to melter 2). Then, the water supply to the melter feed ADS pumps is isolated (by closure of valves LFP-YV-1207/2207 for melters 1 and 2, respectively).

This is a SS interlock implemented in the PPJ system. Interlock activation is alarmed on the PCJ and the PPJ system. Parallel signals are sent through the PCJ to override open the skid bypass valve (LVP-YV-04030), and to override close the skid inlet valves (LVP-YV-0407/~~0408~~0415/0449)~~ and outlet valves (LVP-YV-0449/0450)~~. This ensures the PCJ valve controls mimic the PPJ interlocks, to avoid PPJ/PCJ conflicts.

Other LVP Interlocks that Open the Mercury Mitigation Skid Bypass. The LVP header excessive vacuum, LVP header high pressure LVP-PSHH-0139Z interlock, and the loss of power reconfiguration interlock also open the skid bypass valve YV-0403 to redirect flow around the skid. These interlocks are described further in Section 4.1.6.2.1.5.

Valve Permissives. The inlet valves (LVP-YV-0407, LVP-YV-0415, LVP-YV-0449) ~~and outlet valves (LVP-YV-0449, LVP-YV-0450)~~ on each adsorber unit are controlled, along with the bypass valve (LVP-YV-0403), with appropriate permissives to ensure the offgas path cannot be blocked. The inlet and outlet valves must be open before the mitigation skid bypass valve can be closed. Similarly, the bypass valve must be open before the valves for isolating the adsorber units can be closed (close permissives). These permissives are implemented in the PCJ.

4.1.6.2.4.4 Setpoints and Ranges

The setpoints and ranges for the SS interlocks described in Section 4.1.6.2.4.5 are provided in the LAW ~~PDSA~~DSA.

4.1.6.2.5.4 Setpoints and Ranges

The setpoints and ranges for the SS interlocks described in Section 4.1.6.2.5.5 (Interlock, Electric Heater High Outlet Temperature Interlock, TCO Skid Outlet High Temperature Interlock, and TCO Skid Low Outlet Temperature Interlock) are provided in the LAW ~~PDSA~~DSA.

4.1.6.2.6.5 Interlocks, Bypasses, and Permissives

Caustic Scrubber High Outlet Temperature Interlock (Safety Significant). Temperature instrumentation (LVP-TT-0236 and LVP-TT-0237) downstream of the caustic scrubber unit outlet is provided to monitor offgas temperatures. Upon detection of high temperature ~~(setpoint TBD)~~ downstream of the caustic scrubber unit outlet, the following actions shall occur:

4.2.3.9 Ammonia/Air Dilution Skid Normal Operation

4.2.3.9.1 Operational Constraints

Per Section 8.3 of 24590-LAW-M6C-LVP-00019, BOF-AMR-PCV-8027 / 8029 / 8031 / 8033, LAW-LVP-PCV-0527, and LAW-LVP-AV-0523 wide open flow coefficients (i.e. CV coefficients) are credited with flow restriction. Either AMR-V-35164 is locked close to maintain flow path through AMR-PCV-8029 or BOF-V-35157 is locked closed to maintain flow path through AMR-PCV-8033. AMR-V-35155 is locked closed to maintain flow through AMR-PCV-8027. AMR-V-35163 is locked closed to maintain flow through AMR-PCV-8031.

4.2.5 System Shutdown

~~RESERVED for~~ To be completed in Phase II(b)

Shutdown Constraints

The Thermal Catalytic Oxidizer/Reducer (TCO) And Ammonia Dilution Skid O&M manual, 24590-CD-POC-MBT0-00007-05-00004 (page 201), describes shutdown criteria for LAW TCO maintenance activities in which process temperatures are reduced creating the possibility of condensation inside the TCO housings, which could lead to potential corrosion issues. “The exhaust gas contains approximately 10% water which will form condensation below approximately 200°F. During short-time shutdowns, seal the system to maintain heat in the housing and keep the catalyst above 200°F to prevent water condensation before the system starts up again. During shutdowns that will be long enough for the catalyst to cool below 200°F, all the process exhaust gas should be flushed from the housing by allowing fresh air to enter the system through the process and exit up the stack using the "chimney-effect" of the stack to move the air through the system.”

4.3 Testing and Maintenance

Incomplete – RESERVED for later

4.3.1 Safety Instrumented Functions (SIF) Testing Intervals

Confirmation of the Probability of Failure on Demand (PFD) calculations (referenced below) remain true when the operational requirements of full functional testing of the Safety Instrumented Functions (SIF) are met on the intervals defined below:

SIF Case (Safety Interlocks)	Full Functional Testing Interval [In YEARS – unless otherwise noted]	Ref.
LAW Melter 1/2 Wet Electrostatic Precipitator High Level (each)	5	24590-LAW-U3C-PPJ-00002
LAW Melter 1/2 SBS High Level (each)	2	24590-LAW-U3C-PPJ-00003
LAW Melter 1/2 SBS Low Level (each)	0.5	24590-LAW-U3C-PPJ-00003
LAW Caustic Scrubber Recirculation Low Pressure	2	24590-LAW-U3C-PPJ-00004
LAW Caustic Scrubber Recirculation Low Flow	2	24590-LAW-U3C-PPJ-00004
LAW Caustic Scrubber Process Water Supply Low Pressure	2	24590-LAW-U3C-PPJ-00004
LAW TCO Heater High Temperature	5	24590-LAW-U3C-PPJ-00005
LAW TCO Skid High Temperature	5	24590-LAW-U3C-PPJ-00005
LAW Ammonia High Flow	2	24590-LAW-U3C-PPJ-00005
LAW Ammonia Dilution Air Low Flow	2	24590-LAW-U3C-PPJ-00005

LAW Carbon Bed High Differential CO Concentration	0.5	24590-LAW-U3C-PPJ-00006
LAW Offgas HEPA Preheater High Temperature	3	24590-LAW-U3C-PPJ-00007
LAW Offgas Header High Pressure	0.25	24590-LAW-U3C-PPJ-00008
LAW Offgas Header Low Pressure	0.25	24590-LAW-U3C-PPJ-00008
LAW Offgas Exhauster-00001A, 1B, 1C Shaft Air Supply Low Pressure (each)	0.25	24590-LAW-U3C-PPJ-00020
LAW Offgas Exhauster-00001A, 1B, 1C Shaft Seal Low Pressure (each)	0.25	24590-LAW-U3C-PPJ-00020

5 Sources, Bases, and Other References

5.1 Source / Basis References

Document Number	Title	Text Reference
~~24590-WTP-PSAR-ESH-01-002-03~~24590-LAW-DSA-NS-18-001	~~*Preliminary Documented Safety Analysis to Support Construction Authorization; LAW Facility Specific Information*~~*Documented Safety Analysis for the Low-Activity Waste Facility*	LAW ~~PDSA~~ DSA

5.2 Other References

Document Number	Title
24590-LAW-M6C-LVP-00019	*Analytical Limits for Ammonia High Flow Interlock and Ammonia Dilution Air Flow Interlock*
24590-LAW-M6C-LVP-~~00007~~00027	*Analytical limits for Carbon Bed High Differential Concentration Interolock*
24590-LAW-PER-CTST-17-001	*Environmental Performance Demonstration Test Plan*
24590-LAW-U3C-PPJ-00003	*PFD Calculation for LAW Wet Electrostatic Precipitator High Level Interlocks*
24590-LAW-U3C-PPJ-00003	*PFD Calculation for LAW SBS High and Low Level Interlocks*
24590-LAW-U3C-PPJ-00004	*PFD Calculation for LAW Caustic Scrubber Safety Interlocks*
24590-LAW-U3C-PPJ-00005	*PFD Calculation for LAW TCO Heater/Skid High Temperature and Ammonia High/Dilution Air Low Flow Interlocks*
24590-LAW-U3C-PPJ-00006	*PFD Calculation for LAW Carbon Bed High Differential CO Concentration Interlock*
24590-LAW-U3C-PPJ-00007	*PFD Calculation for LAW Offgas HEPA Preheater High Temperature Interlock*
24590-LAW-U3C-PPJ-00008	*PFD Calculation for LAW Loss of Normal Power to Safety Equipment and Oggas Header High/Low Pressure Interlock*
24590-LAW-U3C-PPJ-00020	*PFD Calculation for LAW Offgas Exhausters Shaft Seal Air Supply/Seal Low Pressure Interlock*

Appendix A Test Objectives, Conditions, and Acceptance Criteria

Note: The testing activities included in this appendix are limited to those identified as needing to be performed by Startup or Commissioning to support the verification of requirements in Section 3. This appendix does not restrict Startup or Commissioning from performing other routine system functional testing or grooming.

Requirement (para #)	Plan (including SSCs)	Acceptance Criteria (test acceptance criteria (TAC) or general test criteria (GTC))*	Notes/Comments	Test Conditions
3.4.2.4	Verify the system NO_x emissions are within Air Permit limits.	(GTC)~~(TAC)~~ NO_x emissions do not exceed 477 ppmdv at 21% O2 averaged over 24 consecutive hours or ~~20.1~~200.1 pounds per day averaged over 30 consecutive days.	In accordance with Ecology approved test plan.	Offgas system operational. Melters processing simulated waste.
3.4.2.5	Verify the system PM or PM10 emissions are within Air Permit limits.	(GTC)~~(TAC)~~ PM or PM_{10} emissions do not exceed 0.36 pounds per hour at 21% O2 when averaged over 24 consecutive hours.	In accordance with Ecology approved test plan.	Offgas system operational. Melters processing simulated waste.
3.4.2.6	Verify the system Particulate Matter emissions comply with WTP Dangerous Waste Permit requirements.	(GTC)~~(TAC)~~ Particulate ~~Particular~~ Matter emissions do not exceed 34 mg/dscm (0.015 grams/dscf).	In accordance with Ecology approved test plan.	Offgas system operational. Melters processing simulated waste.
3.4.2.7	Verify the system hydrochloric acid and chlorine gas emissions comply with WTP DWP requirements.	(GTC)~~(TAC)~~ The combined hydrochloric acid and chlorine gas emissions do not exceed 21 ppmv.	In accordance with Ecology approved test plan.	Offgas system operational. Melters processing simulated waste.
3.4.2.8	Verify the system dioxin and furan emissions comply with WTP DWP requirements.	(GTC)~~(TAC)~~ Dioxin and furan TEQ emissions, individually, do not exceed 0.2 nanograms/dcsm.	In accordance with Ecology approved test plan.	Offgas system operational. Melters processing simulated waste.
3.4.2.9	Verify the system mercury emissions comply with WTP DWP requirements.	(GTC)~~(TAC)~~ Mercury emissions do not exceed 45 µg/dscm.	In accordance with Ecology approved test plan.	Offgas system operational. Melters processing simulated waste.
3.4.2.10	Verify the system lead and cadmium emissions comply with WTP DWP requirements.	(GTC)~~(TAC)~~ The combined lead and cadmium emissions do not exceed 120 µg/dscm.	In accordance with Ecology approved test plan.	Offgas system operational. Melters processing simulated waste.
3.4.2.11	Verify the system arsenic, beryllium, and chromium emissions comply with WTP DWP requirements.	(GTC)~~(TAC)~~ The combined arsenic, beryllium, and chromium emissions do not exceed 97 µg/dscm.	In accordance with Ecology approved test plan.	Offgas system operational. Melters processing simulated waste.
3.4.2.12	Verify the system carbon monoxide emissions comply with WTP Dangerous Waste Permit requirements.	(GTC)~~(TAC)~~ Carbon monoxide emissions do not exceed 100 ppm by volume, over an hourly rolling average, dry basis.	Carbon monoxide emissions to be measured and recorded by a continuous monitoring system over an hourly rolling average. In accordance with Ecology approved test plan.	Offgas system operational. Melters processing simulated waste.
3.4.2.13	Verify the system hydrocarbon emissions comply with WTP Dangerous Waste Permit requirements.	(GTC)~~(TAC)~~ Hydrocarbon emissions do not exceed 10 ppm by volume, over an hourly rolling average, dry basis, and reported as propane.	Hydrocarbon emissions to be measured and recorded by a continuous monitoring system over an hourly rolling average. In accordance with Ecology approved test plan.	Offgas system operational. Melters processing simulated waste.

Requirement (para #)	Plan (including SSCs)	Acceptance Criteria (test acceptance criteria (TAC) or general test criteria (GTC))*	Notes/Comments	Test Conditions
3.4.2.14	Verify the system organic dangerous constituents emissions comply with WTP Dangerous Waste Permit requirements.~~.~~	**(GTC)**~~**(TAC)**~~ Achieve destruction and removal efficiency (DRE) of 99.99 % for the principal organic dangerous constituents.	Organic emissions to be calculated in accordance with the formula in the WTP Dangerous Waste Permit. In accordance with Ecology approved test plan.	Offgas system operational. Melters processing simulated waste.
3.4.2.26	Test to verify the vacuum breaker maintains offgas header pressure between -60 in WG and -67 in WG, measured at a location between the caustic scrubber and the exhauster suction, with the offgas system in the reconfiguration line-up. The test shall confirm acceptable pressure for one, two and three online fan configurations (at reconfiguration speed). **CTNs:** LVP-VACB-00001 LVP-VACB-00002	**(TAC)** Exhauster suction pressure is maintained between -60 in. W.G. and -67 in. W.G. and the vacuum breaker has a flow capacity of at least 4275 scfm	Per 24590-LAW-DSA-NS-18-0001 Section 4.4.3.16.4 and Appendix D of 24590-LAW-M6C-LVP-00004, 4275 SCFM occurs with a 1 melter and 3 exhauster configuration and represents the combined total of the breakers.	
3.5.2.6	Test to verify the melter special relief device lifts s at ≤ 10 in. W.G. and relieve rated flow at ≤ 13 in. W.G. **CTNs:** LOP-SP-00003 LOP-SP-00008	**(TAC)** The melter special relief device lifts s at ≤ 10 in. W.G. and relieves rated flow at ≤ 13 in. W.G.		
3.8.2.1	Test the offgas exhauster to verify sufficient motive force to exhaust the melter offgas out the top of the stack under minimum operating flow. **CTNs:** LVP-EXHR-00001A LVP-EXHR-00001B LVP-EXHR-00001C	**(TAC)** Minimum exhauster specification under normal operation modes 2 Melters, 2 Exhausters: dP 110.8 in. W.C. @ 1559scfm 1 Melters, 1 Exhausters: dP 103.4 in. W.C. @ 2063scfm	Operating conditions defined in 24590-LAW-M6C-LVP-00004, rev 2	Test under all normal melter operating conditions with simulated melter feed. LMP, LOP, LVP are operational
~~3.8.2.3~~	~~Test to verify the exhauster fans provide vacuum sufficient to keep the offgas system operating and provide flow to an elevated release for the duration of the cold cap burn off, as established by analysis. When actuated by the LVP Header High/Low Pressure or Loss of Power Interlock, the system can maintain sufficient motive force to pull offgas from the melter plena with a single exhauster operating.~~ ~~Begin the test with two exhausters running and both melters having a simulant cold cap.~~ ~~Shut off one of the two exhausters while prohibiting the third exhauster from coming on line.~~ ~~Run the melter and offgas system in normal configuration simulating a cold cap then configure the offgas system as it would be after the LVP Header High/Low Pressure or Loss of Power Interlocks were triggered by making the following changes in no particular order:~~ ~~Shut off air and flush water to the ADS pumps feed to the melters, stop injection of air and DIW to the primary and standby film coolers on both melters, open isolation valves to the LOP standby gas lines bypass the mercury mitigation skid, the TCO skid, and the caustic scrubber, stop ammonia and air addition into the ammonia/air dilution skid, isolate power to the TCO skid heater, take the exhausters to a~~	~~**(TAC)**~~ ~~The exhausters run for the duration of a cold cap burn off after the offgas system had been reconfigured to simulate a LVP Header High/Low Pressure or Loss of Power Interlock trip without either melter plenum pressure differential exceeding the setpoint on the melter plenum high-pressure safety interlock, and flow is maintained out of the LVP stack.~~	~~Refer to 24590-LAW-3ZD-LMP-00001, Low-Activity Waste Melter Process System Design Description – System Design Description, for more information on the melter plenum high-pressure safety interlock.~~	~~Begin the test under all normal melter operating conditions with both melters receiving simulated melter feed.~~

Requirement (para #)	Plan (including SSCs)	Acceptance Criteria (test acceptance criteria (TAC) or general test criteria (GTC))*	Notes/Comments	Test Conditions
	~~predetermined setting (TBD), open the primary and standby film coolers emergency air inbleed for both melters, reconfigure the WESP outlet valves to the fully open position for both melters, stop air flow to both WESPs, . open the isolation valve to the bypass vacuum breaker, close the vessel vent header pressure control valve, open the associated bypass valve from the standby film coolers to the SBSs.~~ ~~Repeat the test for each of the three exhausters.~~ ~~**Component Tag Number (CTN)s**~~ ~~UPE-YY-2303/2403/2503 or LVP-PT-0139/0140 actuate the following final elements:~~ ~~LFP-YV-1207/2207~~ ~~LFP-YV-1208/2208~~ ~~LOP-YV-1098/2098~~ ~~LOP-YV-1109/2109~~ ~~LOP-YV-1129/2129~~ ~~LOP-YV-1008/2008~~ ~~LOP-YV-1401/2401/1402/2402~~ ~~LOP-FV-1140/2140~~ ~~LVP-PV-0072~~ ~~LVP-YV-0403, 0501~~ ~~LVP-YV-0528~~ ~~LVP-YV-0538~~ ~~LVP-HTR-00002~~ ~~LVP-YV-0097~~ ~~LVP-EXHR-00001A/B/LVP-EXHR-00001A~~ ~~LVP-EXHR-00001B~~ ~~LVP-EXHR-00001C~~ ~~LMP-PDT/PDI-1410/1411~~ ~~LMP-PDT-PDI-2410/2411~~ ~~SDJ-FT/FI-2101~~			
~~3.8.2.5~~	~~Test to verify the exhausters discharge check valve for the non-operational exhauster in the LVP system shuts to prevent recirculation.~~ ~~Shutdown each exhauster without closing the isolation valves and determine whether the exhauster discharge check valve for the non-operational exhauster closes.~~ ~~CTNs:~~ ~~LVP-EXHR-00001A~~ ~~LVP-SP-00003~~ ~~LVP-V-01549~~ ~~LVP-V-0163~~ ~~LVP-V-00141~~ ~~LVP-EXHR-00001B~~ ~~LVP-SP-00002~~ ~~LVP-V-01550~~ ~~LVP-V-01655~~ ~~LVP-V-0140~~ ~~LVP-EXHR-00001C~~	~~**(TAC)**~~ ~~Backflow prevention device (check valves) on the discharge of each exhauster closes.~~	~~Begin the test under all normal melter operating conditions with both melters receiving simulated melter feed.~~	~~Exhauster not isolated.~~

Requirement (para #)	Plan (including SSCs)	Acceptance Criteria (test acceptance criteria (TAC) or general test criteria (GTC))*	Notes/Comments	Test Conditions
	~~LVP-SP-00001~~ ~~LVP-V-01551~~ ~~LVP-V-01657~~ ~~LVP-V-00139~~			
3.8.2.7	Test that the backup air supply of 7.4 ft^3 for the exhauster shaft seals will maintain confinement for the duration for the substantial cold cap burn off. **CTNs:** LVP-EXHR-00001A LVP-EXHR-00001B LVP-EXHR-00001C	**(TAC)** After 2 hours of cold cap burn off, the pressure at the exhauster shaft seals air supply is less than the analytical limit of 90 psig	Per calculation 24590-LAW-M6C-LVP-00025 Rev. 0B, backup volumes greater than 7.4 ft^3 may be used, but will decrease the analytical limit. However, a decrease in the analytical limit adds margin to the system by increasing the duration that the backup volume can supply seal air.	LVP is operational
3.8.2.8	Test that the surge capacity of 0.2 ft^3 for the backup air supply will maintain the shaft seal supply pressure. **CTNs:** LVP-EXHR-00001A LVP-EXHR-00001B LVP-EXHR-00001C	**(TAC)** The pressure at the exhauster shaft seals is greater than the analytical limit of 35.7 psig	Per calculation 24590-LAW-M6C-LVP-00025 Rev. 0B, surge volumes greater than 0.2 ft^3 may be used, but will decrease the analytical limit. However, a decrease in the analytical limit adds margin to the system by increasing the time it takes to lose seal air pressure.	LVP is operational
3.9.2.2.1	Test to verify interlock opens the valve on the in-bleed assembly and opens the associated bypass valve from the standby film cooler to the SBS upon detection of low air flow in the primary or standby film cooler outlets. **CTNs:** LOP-FT-1408 LOP-FT-1409 LOP-FT-1410 LOP-FT-1411 LOP-FT-2408 LOP-FT-2409 LOP-FT-2410 LOP-FT-2411 ~~LOP-TTFT-1152~~ LOP-YV-1401 LOP-YV-1407 ~~LOP-TTFT-1153~~ LOP-YV-1402 LOP-YV-1406 ~~LOP-TTFT-2152~~ LOP-YV-2401 LOP-YV-2407 ~~LOP-TTFT-2153~~ LOP-YV-2402 LOP-YV-2406 LOP-YV-1008 LOP-YV-2008	**(TAC)** Prevent offgas piping (from film cooler through the SBS downcomer) temperatures from exceeding 1112 °F. When the sensor measures a flow below setpoint (see 24590-LAW-J3C-PPJ-00018~~TBD~~) at a film cooler, the PPJ opens air ~~inlet~~ inbleed valves to provide additional air cooling to that ~~film cooler~~melter and opens the associated bypass valve from the standby film cooler to the SBS.	Air in bleed is process air from the WPC. The setpoint calculation (24590-LAW-J3C-PPJ-00018) protects the analytical limit to account for instrument uncertainties, resulting in a limiting trip setpoint (LTSP) to activate the interlock to open air inbleed valves to the affected film coolers at 147.3 ACFM (primary cooler) and 7.5 ACFM (standby cooler) prevent offgas piping temperatures from exceeding 1112 °F. References: 24590-LAW-J0X-J41T-00001, *LAW Facility Safety Instrumented Function Trip Setpoint Index* Melter 1 Primary Film Cooler 24590-LAW-M6-LOP-00001005, *P&ID - LAW - LAW Primary Offgas Process System Melter 1 Film Cooler Offgas* 24590-LAW-M6-LOP-00004002, *P&ID - LAW - LAW Primary Offgas Process System Melter 1 LOP-FCLR-00001* 24590-LAW-J3-LOP-90007, *Logic Diagram - LAW-T18F01C01 Melter 1 Primary Film Cooler Outlet High Temperature Interlock* Melter 1 Standby Film Cooler 24590-LAW-M6-LOP-00001005, *P&ID - LAW - LAW Primary Offgas Process System Melter 1*	PPJ operational. Signal may be simulated.

Requirement (para #)	Plan (including SSCs)	Acceptance Criteria (test acceptance criteria (TAC) or general test criteria (GTC))*	Notes/Comments	Test Conditions
			Film Cooler Offgas 24590-LAW-M6-LOP-00004001, *P&ID - LAW - LAW Primary Offgas Process System Melter 1 LOP-FCLR-00002* 24590-LAW-J3-LOP-90008, *Logic Diagram - LAW-T18F01C02 Melter 1 Standby Film Cooler Outlet High Temperature Interlock* Melter 2 Primary Film Cooler 24590-LAW-M6-LOP-00002005, *P&ID - LAW - LAW Primary Offgas Process System Melter 2 Film Cooler Offgas* 24590-LAW-M6-LOP-00005002, *P&ID - LAW - LAW Primary Offgas Process System Melter 2 LOP-FCLR-00003* 24590-LAW-J3-LOP-90009, *Logic Diagram - LAW-T18F01C03 Melter 2 Primary Film Cooler Outlet High Temperature Interlock* Melter 2 Secondary Film Cooler 24590-LAW-M6-LOP-00002005, *P&ID - LAW - LAW Primary Offgas Process System Melter 2 Film Cooler Offgas* 24590-LAW-M6-LOP-00005001, *P&ID - LAW - LAW Primary Offgas Process System Melter 2 LOP-FCLR-00004* 24590-LAW-J3-LOP-90010, *Logic Diagram - LAW-T18F01C04 Melter 2 Standby Film Cooler Outlet High Temperature Interlock*	
3.9.2.2.1.1	Test to verify the failure position on loss (or simulated loss) of control signal or air to the valve (s): • melter standby film cooler isolation valve - fails in an OPEN position • melter 1 and 2 primary film cooler emergency air inbleed valves - fail in an OPEN position • melter standby film cooler emergency air inbleed valves - fail in an OPEN position **CTNs** **Melter 1:** LOP-YV-1008 LOP-YV-1401 LOP-YV-1407 LOP-YV-1402 LOP-YV-1406 **Melter 2:** LOP-YV-2008 LOP-YV-2401	**(TAC)** Failed primary/standby film coolers low flow interlocked components fail safe position on loss of control signal or air		

Requirement (para #)	Plan (including SSCs)	Acceptance Criteria (test acceptance criteria (TAC) or general test criteria (GTC))*	Notes/Comments	Test Conditions
	LOP-YV-2407 LOP-YV-2402 LOP-YV-2406			
3.9.2.2.2	Test to verify the interlock closes the demineralized water flush valve upon detection of WESP high liquid level. **CTNs** LOP-LT-1059 melter 1 WESP level transmitter LOP-YV-1061 melter 1 ~~DIW flush~~WESP water addition valve LOP-LT-2059 melter 2 WESP level transmitter LOP-YV-2061 melter 2 ~~DIW flush~~ WESP water addition valve	**(TAC)** On PPJ detection of WESP high liquid level (<18.5 inches above the bottom head-to-vessel weld line), the DIW flush valve to the WESP is closed by the PPJ.	References: PPJ trip setpoint: 24590-LAW-J0X-J41T-00001, LAW Facility Safety Instrumented Function Trip Setpoint Index Melter 1 WESP 24590-LAW-M6-LOP-00001004, P&ID - LAW - LAW Primary Offgas Process System Melter 1 LOP-WESP-00001 24590-LAW-J3-LOP-90001, Logic Diagram - LAW-T02F01C01 Melter 1 WESP High Level Interlock Melter 2 WESP 24590-LAW-M6-LOP-00002004, P&ID - LAW - LAW Primary Offgas Process System Melter 2 LOP-WESP-00002 24590-LAW-J3-LOP-90002, Logic Diagram - LAW-T02F01C02 Melter 2 WESP High Level Interlock 24590-LAW-J3C-PPJ-00002, Rev. B, states in Section 2.6.7, the lowest measured level (0 inches) corresponds to 5.5625 inches above the bottom WESP head-to-vessel weld line. 18.5 inches above the bottom head-to-vessel weld line is considered the Design Limit in the calculation. The difference is 12.93 inches.	DIW and PPJ systems operating.
3.9.2.2.2.1	Test to verify the failure position on loss (or simulated loss) of control signal or air to the valve (s): • WESP water addition supply valve - fails in a CLOSED position **CTNs** **Melter 1:** LOP-YV-1061 **Melter 2:** LOP-YV-2061	**(TAC)** Failed WESP high level interlocked components fail safe position on loss of control signal or air		
3.9.2.2.3.1	Test to verify that upon detection of a high SBS level, the safety interlock closes the DIW isolation valves to the associated melter valve bulge, and closes DIW isolation valves to associated SBS condensate purge pump priming lines. **CTNs** LOP-LT-1011	**(TAC)** Upon SBS high level (<34.94 inches above the discharge of the downcomer (69.94 inches above the vessel tangent line)) signal through the PPJ, DIW to the associated process cell bulge and to the associated SBS condensate purge pump priming lines is isolated.	LOP-LT-1011 and LOP-LT-2011 perform ~~PSD Air Permit and~~ safety functions. The indications are displayed by the PCJ system.	DIW and PPJ systems operating.

Requirement (para #)	Plan (including SSCs)	Acceptance Criteria (test acceptance criteria (TAC) or general test criteria (GTC))*	Notes/Comments	Test Conditions
	LOP-YV-1148 (melter 1 DIW to bulge) LOP-YV-1156 LOP-YV-1157 LFP-YV-1207 LFP-YV-1211 LOP-LT-2011 LOP-YV-2148 (melter 2 DIW to bulge) LOP-YV-2156 LOP-YV-2157 LFP-YV-2207 LFP-YV-2211		Shutting demineralized water and plant service air supply to the melter feed pumps terminates feed to the melter. References: Melter1 SBS High Level 24590-LAW-M6-LOP-00001001, *P&ID - LAW - LAW Primary Offgas Process System Melter 1 LOP-SCB-00001* 24590-LAW-M6-LOP-00001002, *P&ID - LAW - LAW Primary Offgas Process System Melter 1 LOP-VSL-00001* 24590-LAW-M6-LOP-00001003, *P&ID - LAW - LAW Primary Offgas Process System Melter 1 LOP-BULGE-00001* 24590-LAW-M6N-LOP-00067, *Addition of Safety Valves to LOP System for DIW Supply Shutoff* 24590-LAW-J3-LOP-90003, *Logic Diagram - LAW-T03F01C01 Melter 1 SBS High Level Interlock* Melter 2 SBS High Level 24590-LAW-M6-LOP-00002001, *P&ID - LAW - LAW Primary Offgas Process System Melter 2 LOP-SCB-00002* 24590-LAW-M6-LOP-00002002, *P&ID - LAW - LAW Primary Offgas Process System Melter 2 LOP-VSL-00002* 24590-LAW-M6-LOP-00002003, *P&ID- LAW - LAW Primary Offgas Process System Melter 1 LOP-BULGE-00002* (**Note:** Unofficial redline drawings show change in this title to melter 2, but it is still listed on iDocSearch as melter 1.) 24590-LAW-J3-LOP-90004, *Logic Diagram - LAW-T03F01C02 Melter 2 SBS High Level Interlock*	
3.9.2.2.3.2	Test to verify that upon detection of a high SBS level, the safety interlock closes the feed pump plant air supply valve. **CTNs** LOP-LT-1011 LFP-YV-1208 LFP-YV-1212 LOP-LT-2011	**(TAC)** Upon SBS high level (<34.94 inches above the discharge of the downcomer (69.94 inches above the vessel tangent line)) signal through the PPJ, feed pump plant air supply valve is isolated.	LOP-LT-1011 and LOP-LT-2011 perform safety functions. The indications are displayed by the PCJ system. Shutting demineralized water and plant service air supply to the melter feed pumps terminates feed to the melter.	PPJ systems operating.

Requirement (para #)	Plan (including SSCs)	Acceptance Criteria (test acceptance criteria (TAC) or general test criteria (GTC))*	Notes/Comments	Test Conditions
	LFP-YV-2208 LFP-YV-2212		References: Melter1 SBS High Level 24590-LAW-M6-LOP-00001001, *P&ID - LAW - LAW Primary Offgas Process System Melter 1 LOP-SCB-00001* 24590-LAW-M6-LOP-00001002, *P&ID - LAW - LAW Primary Offgas Process System Melter 1 LOP-VSL-00001* 24590-LAW-M6-LOP-00001003, *P&ID - LAW - LAW Primary Offgas Process System Melter 1 LOP-BULGE-00001* 24590-LAW-M6N-LOP-00067, *Addition of Safety Valves to LOP System for DIW Supply Shutoff* 24590-LAW-J3-LOP-90003, *Logic Diagram - LAW-T03F01C01 Melter 1 SBS High Level Interlock* Melter 2 SBS High Level 24590-LAW-M6-LOP-00002001, *P&ID - LAW - LAW Primary Offgas Process System Melter 2 LOP-SCB-00002* 24590-LAW-M6-LOP-00002002, *P&ID - LAW - LAW Primary Offgas Process System Melter 2 LOP-VSL-00002* 24590-LAW-M6-LOP-00002003, *P&ID- LAW - LAW Primary Offgas Process System Melter 1 LOP-BULGE-00002* (**Note:** Unofficial redline drawings show change in this title to melter 2, but it is still listed on iDocSearch as melter 1.) 24590-LAW-J3-LOP-90004, *Logic Diagram - LAW-T03F01C02 Melter 2 SBS High Level Interlock*	
3.9.2.2.3.3	Test to verify the failure position on loss (or simulated loss) of control signal or air to the valve (s): • melter SBS condensate bulge flush supply valve - fails in a CLOSED position • melter SBS condensate recirculation pump priming valves - fail in a CLOSED position **CTNs** **Melter 1:** LOP-YV-1148 LOP-YV-1156 LOP-YV-1157 **Melter 2:** LOP-YV-2148	**(TAC)** Failed SBS high level interlocked components fail safe position on loss of control signal or air		

Requirement (para #)	Plan (including SSCs)	Acceptance Criteria (test acceptance criteria (TAC) or general test criteria (GTC))*	Notes/Comments	Test Conditions
	LOP-YV-2156 LOP-YV-2157			
3.9.2.2.4.1	Test to verify that upon detection of a low SBS level, the safety interlock ~~isolates power to the associated SBS waterpurge pump and~~ closes PSA isolation valves to the melter feed pumps. **CTNs** LOP-LT-1011 LFP-YV-1212 LFP-YV-1208 ~~LOP-PMP-00003A~~ ~~LOP-PMP-00003B~~ LOP-LT-2011 LFP-YV-2212 LFP-YV-2208 ~~LOP-PMP-00006A~~ ~~LOP-PMP-00006B~~	**(TAC)** Upon SBS low level (≥ 24.6.4 inches above the discharge of the downcomer (59.64 inches above the vessel tangent)) signal through the PPJ, PSA supply to melter feed pumps is terminated. ~~and the operating SBS condensate purge pump is electrically isolated.~~	LOP-LT-1011 and LOP-LT-2011 perform ~~Air Permit and~~ safety functions. The indications are displayed by the PCJ. Shutting ~~Dewan PS~~down PSA supply to the melter feed pumps terminates feed to the melter.	~~Pump power, liquid in SBS, and PPJ systems.~~ PPJ and PSA systems operating.
3.9.2.2.4.2	Test to verify that upon detection of a low SBS level, the safety interlock isolates power to the associated SBS primary and standby water purge pump. **CTNs** LOP-LT-1011 LOP-CTR-20003A LOP-CTR-20003B LOP-LT-2011 LOP-CTR-20006A LOP-CTR-20006B	**(TAC)** Upon SBS low level (≥ 24.6.4 inches above the discharge of the downcomer (59.64 inches above the vessel tangent)) signal through the PPJ, the operating SBS condensate purge pump is electrically isolated.	LOP-LT-1011 and LOP-LT-2011 perform safety functions. The indications are displayed by the PCJ.	Pump power, liquid in SBS and PPJ systems operating.
3.9.2.3.1.1	Test to verify the interlock isolates power to the non-safety heating elements ~~and opens the bypass valve to bypass the mercury mitigation skid~~ upon detection of a high outlet temperature from the pre-heaters~~, and after a sufficient time after opening the bypass valve, the interlock closes the mercury mitigation skid inlet valves~~. **CTNs** LVP-TT-0136 LVP-TT-0137 LVP-CTR-00001A LVP-CTR-00003A ~~LVP-HTR-00001A~~ ~~LVP-HTR-00003A~~ ~~LVP-YV-0403~~ ~~LVP-YV-0407~~ ~~LVP-YV-0415~~ ~~LVP-YV-0449~~	**(TAC)** The interlock isolates the power to- non-safety heating ~~elements and opens the bypass valve to bypass the mercury mitigation skid~~ upon detection of a high outlet temperature- from the pre-heaters (HEPA filter housing temperature reaches 185 °F), preventing the HEPA filter housing temperature from exceeding 192 °F ~~and after a sufficient time period- after opening the bypass valve, the interlock closes the mercury mitigation skid inlet valves.~~		PCJ and PPJ systems operating

Requirement (para #)	Plan (including SSCs)	Acceptance Criteria (test acceptance criteria (TAC) or general test criteria (GTC))*	Notes/Comments	Test Conditions
3.9.2.3.1.2	Test to verify the interlock closes the mercury mitigation skid inlet valves upon detection of a high outlet temperature from the pre-heaters. **CTNs** LVP-TT-0136 LVP-TT-0137 LVP-YV-0407 LVP-YV-0415 LVP-YV-0449	**(TAC)** The interlock closes the mercury mitigation skid inlet valves prior to the carbon bed inlet temperature exceeding 338°F.		PCJ and PPJ systems operating
3.9.2.3.1.3	Test to verify the failure position on loss (or simulated loss) of control signal or air to the valve (s): • Offgas HEPA preheaters - fail in an OFF position • Carbon bed adsorber bypass valve - fails in an OPEN position • Carbon bed adsorber inlet valves – fail CLOSED only after the carbon bed adsorber bypass valve has opened. **CTNs** LVP-CTR-00001A LVP-CTR-00003A LVP-YV-0403	**(TAC)** Failed Offgas HEPA Preheater high temperature interlocked components fail safe position on loss of control signal, air, or power		
3.9.2.4.3	Test to verify the interlock opens the carbon bed bypass valve upon detection of high differential CO concentration, then closes the mercury mitigation skid inlet valves. **CTNs** LVP-A~~E~~T-0405/0406 LVP-AT-0424/0425 LVP-YV-0403 ~~LYP~~LVP -YV-0407 ~~LYP~~LVP-YV-0415 ~~LYP~~LVP-YV-0449	**(TAC)** Upon detection of a high differential CO signal (≥ 454 ppm) by the PPJ, the carbon bed bypass valve opens, then the mercury mitigation skid inlet valve closes. The total time to acquire a gas sample and close the inlet valve is ≤310 seconds.		
3.9.2.4.3.1	Test to verify the failure position on loss (or simulated loss) of control signal or air to the valve (s): • Carbon bed adsorber bypass valve - fails in an OPEN position **CTNs** LVP-YV-0403	**(TAC)** Failed High Differential CO interlocked components fail safe position on loss of control signal, air, or power		
3.9.2.5.2	Test to verify the interlock isolates power to the TCO skid heaters upon detection of high temperature downstream of the TCO skid heater. **CTNs** LVP-CTR-00002~~LVP-HTR-00002~~ LVP-TT-0509/TE-0509 LVP-TT-0516/TE-0516	**(TAC)** Upon detection of a high temperature (< 805 °F) at the outlet of the skid heater by the PPJ, power to the Catalyst Skid heaters is isolated. Confirm that on activation of the safety catalytic oxidizer skid heater high temperature interlock, all safety components in the LVP systems as listed below and defined in the supplier submittal requirements summary document (24590-LAW-3PS-PPJ-T0006 [under development]) are activated to their safe states LVP-HTR-00002 shuts down via LVP-YC-0510	References: 24590-LAW-J0X-J41T-00001, *LAW Facility Safety Instrumented Function Trip Setpoint Index* 24590-LAW-M6-LVP-00005002, P*&ID - LAW - LAW Secondary Offgas/Vessel Vent Process System SCO/SCR Skid*	

Requirement (para #)	Plan (including SSCs)	Acceptance Criteria (test acceptance criteria (TAC) or general test criteria (GTC))*	Notes/Comments	Test Conditions
			24590-LAW-J3-LVP-90016, *Logic Diagram - LAW-T05F02C01 Catalytic Oxidizer Skid Heater High Temperature Interlock* 24590-LAW-J3-LVP-91001, *Logic Diagram - LAW LVP SIF Final Elements Sheet 1*	
3.9.2.5.2.1	Test to verify the failure position on loss (or simulated loss) of control signal or air to the valve (s): • Thermal catalytic oxidizer heater - fails in an OFF position. **CTNs** LVP-CTR-00002	**(TAC)** Failed TCO Heater High Temperature interlocked components fail safe position on loss of control signal, air, or power.		
3.9.2.5.3.1	Test to verify the interlock isolates ~~ammonia flow and~~ power to the skid heaters~~,~~ upon detection of a high temperature on the TCO skid outlet. **CTNs** ~~LVP-HTR-00002~~ LVP-TT-0552/TE-0552 LVP-TT-0554-/TE-0554 ~~LVP-YV-0528~~ ~~LVP-YV-0560~~ LVP-CTR-00002~~LVP-HTR-00002~~	**(TAC)** Upon detection of a high TCO skid outlet temperature (< 428 °F), the PPJ ~~isolates ammonia flow to the TCO skid and~~ isolates power to the TCO heater.		
3.9.2.5.3.2	Test to verify the interlock isolates ammonia flow upon detection of a high temperature on the TCO skid outlet. **CTNs** LVP-TT-0552/TE-0552 LVP-TT-0554/TE-0554 LVP-YV-0528 LVP-YV-0560	**(TAC)** Upon detection of a high TCO skid outlet temperature (< 428 °F), the PPJ isolates ammonia flow to the TCO skid.		
3.9.2.5.3.3	Test to verify the failure position on loss (or simulated loss) of control signal or air to the valve (s): • Ammonia dilution ammonia supply valves - fail in a CLOSED position • Thermal catalytic oxidizer heater - fails in an OFF position. **CTNs** LVP-CTR-00002 LVP-YV-0528 LVP-YV-0560	**(TAC)** Failed TCO Skid High Temperature interlocked components fail safe position on loss of control signal, air, or power.		
3.9.2.5.5	Test to verify the interlock closes the isolation valve on the ammonia supply line, upon detection of high ammonia supply flow. **CTNs** LVP-FT-0530/FE-0530 LVP-FT-0531/FE-0531 LVP-YV-0528 LVP-YV-0560	**(TAC)** Upon detection of a high ammonia flow signal (≥ 47 scfm) the PPJ isolates ammonia flow to the TCO skid.		.
3.9.2.5.5.1	Test to verify the failure position on loss (or simulated loss) of control signal or air to the valve (s): • Ammonia dilution ammonia supply valves - fail in a CLOSED position	**(TAC)** Failed Ammonia High Flow interlocked components fail safe position on loss of control signal or air.		

Requirement (para #)	Plan (including SSCs)	Acceptance Criteria (test acceptance criteria (TAC) or general test criteria (GTC))*	Notes/Comments	Test Conditions
	CTNs LVP-YV-0528 LVP-YV-0560			
3.9.2.5.6	Test to verify the interlock closes the isolation valve on the ammonia supply line, upon detection of dilution-air flow below the minimum allowable and within the maximum closure time of the valves to prevent reaching LFL in Room L-0322A and prevent exceeding PAC-2 concentration to CLW. **CTNs** LVP-FT-0540/FE-0540 LVP-FT-0541/FE-0541 LVP-YV-0528 LVP-YV-0560	**(TAC)** Upon detection of a low dilution air flow signal (≤369 scfm), the PPJ isolates ammonia flow to the TCO skid and within the maximum closure time (TBD) of the valves to prevent reaching LFL in Room L-0322A and prevent exceeding PAC-2 concentration to CLW.		
3.9.2.5.6.1	Test to verify the failure position on loss (or simulated loss) of control signal or air to the valve (s): • Ammonia dilution ammonia supply valves - fail in a CLOSED position **CTNs** LVP-YV-0528 LVP-YV-0560	**(TAC)** Failed Ammonia Dilution Air Low Flow interlocked components fail safe position on loss of control signal or air.		
3.9.2.6.2	Test to verify the interlock closes the recirculation line isolation valve for the caustic scrubber, bypasses the TCO skid, isolates power to the TCO skid heater, and stops ammonia and air supply to the ammonia/air dilution skid upon detection of low pressure in the caustic scrubber recirculation line. **CTNs** LVP-PT-0220 LVP-YV-0501 LVP-YV-0538 LVP-YV-0528 LVP-YV-0560 LVP-CTR-00002~~LVP-HTR-00002~~ LVP-YV-0219	**(TAC)** Upon detection of a low pressure (≤ 6.8 psig) in the caustic scrubber recirculation line by the PPJ, the PPJ closes the recirculation line isolation valve for the caustic scrubber, bypasses the TCO skid, isolates power to the TCO skid heater, and stops ammonia and air supply to the ammonia/air dilution skid.		
3.9.2.6.2.1	Test to verify the failure position on loss (or simulated loss) of control signal or air to the valve (s): • Thermal catalytic oxidizer skid bypass valve - fails in an OPEN position • PPJ ammonia dilution air supply valve - fails in a CLOSED position • PPJ ammonia dilution ammonia supply valves - fail in a CLOSED position • Thermal catalytic oxidizer heater - fails in an OFF position • Caustic scrubber scrub inlet valve - fails in a CLOSED position **CTNs** LVP-YV-0501 LVP-YV-0538 LVP-YV-0528 LVP-YV-0560 LVP-CTR-00002	**(TAC)** Failed Caustic Scrubber Recirculation Low Pressure interlocked components fail safe position on loss of control signal or air.		

Requirement (para #)	Plan (including SSCs)	Acceptance Criteria (test acceptance criteria (TAC) or general test criteria (GTC))*	Notes/Comments	Test Conditions
	LVP-YV-0219			
3.9.2.6.3	Test to verify the interlock bypasses the TCO skid, isolates power to the TCO skid heater, and stops ammonia and air supply to the ammonia/air dilution skid upon detection of low flow rate in the caustic scrubber recirculation line. **CTNs** LVP-FT-0221/ FE-0221 LVP-YV-0501 LVP-YV-0538 LVP-YV-0528 LVP-YV-0560 LVP-CTR-00002~~LVP-HTR-00002~~ ~~LFP-YV-2208~~	**(TAC)** Upon detection of a low flow rate (≤ 160 gpm) in the caustic scrubber recirculation line, the interlock isolates the power to the TCO skid heater, bypasses the TCO skid, and stops ammonia and air supply to the ammonia/air dilution skid.		LVP-PMP-00003A or 3B circulating caustic solution (or PSW in caustic tank).
3.9.2.6.3.1	Test to verify the failure position on loss (or simulated loss) of control signal or air to the valve (s): • Thermal catalytic oxidizer skid bypass valve - fails in an OPEN position • PPJ ammonia dilution air supply valve - fails in a CLOSED position • PPJ ammonia dilution ammonia supply valves - fail in a CLOSED position • Thermal catalytic oxidizer heater - fails in an OFF position **CTNs** LVP-YV-0501 LVP-YV-0538 LVP-YV-0528 LVP-YV-0560 LVP-CTR-00002	**(TAC)** Failed Caustic Scrubber Recirculation Low Flow interlocked components fail safe position on loss of control signal or air.		
3.9.2.6.6	Test to verify the interlock closes the process water line isolation valve upon detection of low pressure in the process water line. **CTNs** LVP-PT-0216 LVP-YV-0201	**(TAC)** Upon detection of a low-pressure signal (≤ 53.2 psig) in the process water line input to the caustic scrubber by the PPJ, the PSW supply line valve is isolated.		ISA, PSW, PCJ and PPJ systems.
3.9.2.6.6.1	Test to verify the failure position on loss (or simulated loss) of control signal or air to the valve (s): • Caustic scrubber process service water supply valve - fails in a CLOSED position **CTNs** LVP-YV-0201	**(TAC)** Failed Caustic Scrubber Process Water Supply Low Pressure interlocked components fail safe position on loss of control signal or air.		
3.9.2.7.1.1	Test to verify the interlock reconfigures the offgas system to a known state when a high/low LVP header vacuum is detected. **CTNs** LVP-PT-0139 LVP-PT-0140 ~~LOP-YV-1008~~ LFP-YV-1208 LFP-YV-1212 LFP-YV-1211 LFP-YV-1207	**(TAC)** Upon detection of a high/low header vacuum (≥ -56.5″ w.g. or ≤-139.5″ w.g., respectively) by the PPJ: • Stops air to the ADS pumps for both melters (LFP/LCP) • Stops ADS flush water to both melters (LFP/LCP) • Isolate film cooler wash supply • ~~Bypasses the mercury mitigation skid, the TCO skid, and the caustic scrubber.~~ • ~~Stops ammonia and air addition into the ammonia/air dilution skid.~~ • ~~Isolates power to the TCO skid heater.~~ • ~~Takes the exhausters to a predetermined setting.~~	Inbleed valves open no sooner than 78.5 seconds after detection of the high-pressure condition	LFP, PSW, AMR, ISA, PCJ and PPJ systems.

Requirement (para #)	Plan (including SSCs)	Acceptance Criteria (test acceptance criteria (TAC) or general test criteria (GTC))*	Notes/Comments	Test Conditions
	LFP-YV-2208 LFP-YV-2212 LFP-YV-2207 LFP-YV-2211 ~~LOP-YV-1129~~ ~~LOP-YV-1404~~ LOP-YV-1109 LOP-YV-1405 ~~LOP-YV-1098~~ ~~LOP-YV-1161~~ ~~LOP-YV-1401~~ ~~LOP-YV-1407~~ ~~LOP-YV-1402~~ ~~LOP-YV-1406~~ ~~LOP-FV-1140LOP-YV-2129~~ ~~LOP-YV-2404~~ LOP-YV-2109 LOP-YV-2405 ~~LOP-YV-2098~~ ~~LOP-YV-2161~~ ~~LOP-YV-2008~~ ~~LOP-YV-2401~~ ~~LOP-YV-2407~~ ~~LOP-YV-2402~~ ~~LOP-YV-2406~~ ~~LOP-FV-2140~~ ~~LVP-PV-0072~~ ~~LVP-YV-0403~~ ~~LVP-YV-0501~~ ~~LVP-YV-0560~~ ~~LVP-YV-0528~~ ~~LVP-YV-0538~~ ~~LVP-YV-0097~~ ~~LVP-HTR-00002~~ ~~LVP-EXHR-00001A/B/CLVP-YV-0453~~ ~~LVP-YV-0454~~	~~• Stops air and water flow to the primary and standby film coolers for both melters.~~ ~~• Opens the primary and standby film coolers emergency air inbleed for both melters.~~ ~~• Reconfigures the WESP outlet valves to the fully open position for both melters.~~ ~~• Stops air flow to both WESPs.~~ ~~• Opens the isolation valve to the bypass vacuum breaker.~~ ~~• Closes the vessel vent header pressure control valve.~~ ~~• Opens the bypass valve from the standby film coolers to the SBSs.~~ •		
3.9.2.7.1.2	Test to verify the interlock reconfigures the offgas system to a known state when a high/low LVP header vacuum is detected. **CTNs** LVP-PT-0139 LVP-PT-0140 LOP-YV-1098 LOP-YV-1161 LOP-YV-2098 LOP-YV-2161	**(TAC)** Upon detection of a high/low header vacuum (≥ -56.5″ w.g. or ≤-139.5″ w.g., respectively) by the PPJ: • Close WESP Purge Air Valves • Close Film Cooler Air Supply Valves • Open Primary and Standby Film Cooler Emergency Air Inbleed Valves	inbleed valves open no sooner than 78.5 seconds after detection of the high-pressure condition	LFP, PSW, AMR, ISA, PCJ and PPJ systems.

Requirement (para #)	Plan (including SSCs)	Acceptance Criteria (test acceptance criteria (TAC) or general test criteria (GTC))*	Notes/Comments	Test Conditions
	LOP-YV-1129 LOP-YV-1404 LOP-YV-2129 LOP-YV-2404 LOP-YV-1401 LOP-YV-1407 LOP-YV-1402 LOP-YV-1406 LOP-YV-2401 LOP-YV-2407 LOP-YV-2402 LOP-YV-2406			
3.9.2.7.1.3	Test to verify the interlock reconfigures the offgas system to a known state when a high/low LVP header vacuum is detected. **CTNs** LVP-PT-0139 LVP-PT-0140 LOP-YV-1008 LOP-YV-2008 LOP-FV-1140 LOP-FV-2140 LVP-YV-0097 LVP-YV-0501 LVP-YV-0403 LVP-PV-0072	**(TAC)** Upon detection of a high/low header vacuum (≥ -56.5″ w.g. or ≤-139.5″ w.g., respectively) by the PPJ: • Open Standby Film Cooler Isolation Valve • Open Offgas Flow Control Valve • Open Caustic Scrubber Bypass Valve • Open TCO Skid Bypass Valve • Open Carbon Bed Adsorber Bypass Valve • Close Vessel Vent Header Pressure Control Valve	inbleed valves open no sooner than 78.5 seconds after detection of the high-pressure condition	LFP, PSW, AMR, ISA, PCJ and PPJ systems.
3.9.2.7.1.4	Test to verify the interlock reconfigures the offgas system to a known state when a high/low LVP header vacuum is detected. **CTNs** LVP-PT-0139 LVP-PT-0140 LVP-YV-0560 LVP -YV-0528 LVP -YV-0538 LVP-CTR-00002	**(TAC)** Upon detection of a high/low header vacuum (≥ -56.5″ w.g. or ≤-139.5″ w.g., respectively) by the PPJ: • Isolate power to the TCO skid heater. • Close Ammonia Dilution Ammonia Supply Valve • Close Ammonia Dilution Air Supply Valve	inbleed valves open no sooner than 78.5 seconds after detection of the high-pressure condition	LFP, PSW, AMR, ISA, PCJ and PPJ systems.
3.9.2.7.1.5	Test to verify the interlock reconfigures the offgas system to a known state when a high/low LVP header vacuum is detected. **CTNs** LVP-PT-0139 LVP-PT-0140 LVP-EXHR-00001A LVP-EXHR-00001B LVP-EXHR-00001C LVP-YV-0453	**(TAC)** Upon detection of a high/low header vacuum (≥ -56.5″ w.g. or ≤-139.5″ w.g., respectively) by the PPJ: • Set offgas exhausters to fixed speed (2020 RPM) • Open the isolation valve to the bypass vacuum breaker.	inbleed valves open no sooner than 78.5 seconds after detection of the high-pressure condition	LFP, PSW, AMR, ISA, PCJ and PPJ systems.

Requirement (para #)	Plan (including SSCs)	Acceptance Criteria (test acceptance criteria (TAC) or general test criteria (GTC))*	Notes/Comments	Test Conditions
	LVP-YV-0454			
3.9.2.7.1.6	Test to verify the failure position on loss (or simulated loss) of control signal or air to the valve (s): • Offgas exhauster adjustable speed drive - fail in a minimum FIXED speed position • Melter 1 and 2 Feed Pump Plant Air Supply Valves – fail in a CLOSED position • Melter 1 and 2 Feed Pump Demineralized Water Supply Valves – fail in a CLOSED position • Melter 1 and 2 WESP Purge Air Valves – fail in a CLOSED position • Melter 1 and 2 Film Cooler Wash Supply Valves – fail in a CLOSED position • Melter 1 and 2 Film Cooler Air Supply Valves – fail in a CLOSED position • Melter 1 and 2 Primary Film Cooler Emergency Air Inbleed Valves – fail in an OPEN position • Melter 1 and 2 Standby Film Cooler Emergency Air Inbleed Valves – fail in an OPEN position • Melter 1 and 2 Standby Film Cooler Isolation Valves – fail in an OPEN position • Melter 1 and 2 Offgas Flow Control Valves – fail in an OPEN position • Ammonia Dilution Ammonia Supply Valves – fail in a CLOSED position • Ammonia Dilution Air Supply Valve – fails in a CLOSED position • Caustic Scrubber Bypass Valve – fails in an OPEN position • TCO Skid Bypass Valve – fails in an OPEN position • Carbon Bed Adsorber Bypass Valve – fails in an OPEN position • Electrical TCO Heater contactor – fails in an OPEN position. • Vessel Vent Header Pressure Control Valve – fails in a CLOSED position • LVP Bypass Vacuum Breaker Isolation Valves – fail in an OPEN position **CTNs** LOP-YV-1008 LFP-YV-1208 LFP-YV-1212 LFP-YV-1211 LFP-YV-1207 LFP-YV-2208 LFP-YV-2212 LFP-YV-2207 LFP-YV-2211 LOP-YV-1129 LOP-YV-1404 LOP-YV-1109 LOP-YV-1405 LOP-YV-1098 LOP-YV-1161 LOP-YV-1401 LOP-YV-1407 LOP-YV-1402 LOP-YV-1406 LOP-FV-1140 LOP-YV-2129	**(TAC)** Failed Offgas Header High/Low Pressure interlocked components fail safe position on loss of control signal or air.		

Requirement (para #)	Plan (including SSCs)	Acceptance Criteria (test acceptance criteria (TAC) or general test criteria (GTC))*	Notes/Comments	Test Conditions
	LOP-YV-2404 LOP-YV-2109 LOP-YV-2405 LOP-YV-2098 LOP-YV-2161 LOP-YV-2008 LOP-YV-2401 LOP-YV-2407 LOP-YV-2402 LOP-YV-2406 LOP-FV-2140 LVP-PV-0072 LVP-YV-0403 LVP-YV-0501 LVP-YV-0560 LVP -YV-0528 LVP -YV-0538 LVP-YV-0097 LVP-CTR-00002 LVP-EXHR-00001A/B/C LVP-YV-0453 LVP-YV-0454			
3.9.2.8.1.1	Test to verify the interlock closes the normal supply isolation valve~~, and stops air supply to both melters' ADS pumps~~ upon detection of low pressure in the normal purge air supply. **CTNs** LVP-PT-0156 LVP-PT-0160 LVP-PT-0164 ~~LFP-YV-1208~~ ~~LFP-YV-1212~~ ~~LFP-YV-2208~~ ~~LFP-YV-2212~~ LVP-YV-0157 LVP-YV-0161 LVP-YV-0165	**(TAC)** Upon detection of offgas exhauster 1A/1B/1C shaft seal air supply low pressure (≤ 90 psig): ~~• Stop air to the ADS pumps for both melters. (LFP/LCP)~~ • Isolate normal air supply		ISA, PCJ and PPJ systems.
3.9.2.8.1.2	Test to verify the interlock stops air supply to both melters' ADS pumps upon detection of low pressure in the normal purge air supply. **CTNs** LVP-PT-0156 LVP-PT-0160 LVP-PT-0164 LFP-YV-1208 LFP-YV-1212 LFP-YV-2208 LFP-YV-2212	**(TAC)** Upon detection of offgas exhauster 1A/1B/1C shaft seal air supply low pressure (≤ 90 psig): • Stop air to the ADS pumps for both melters. (LFP/LCP)		ISA, PCJ and PPJ systems.

Requirement (para #)	Plan (including SSCs)	Acceptance Criteria (test acceptance criteria (TAC) or general test criteria (GTC))*	Notes/Comments	Test Conditions
3.9.2.8.1.3	Test to verify the failure position on loss (or simulated loss) of control signal or air to the valve (s): • Exhauster shaft normal purge air supply valves - fails in a CLOSED position **CTNs** LVP-YV-0157 LVP-YV-0161 LVP-YV-0165	**(TAC)** Failed Offgas Exhauster Shaft Seal Air Supply Low Pressure interlocked components fail safe position on loss of control signal or air.		
3.9.2.8.4	Test to verify the interlock activates the backup purge air supply upon detection of low purge air pressure. **CTNs** LVP-PT-0158 LVP-PT-0162~~LVP-PT-0166~~ LVP-PT-0166 LVP-YV-0159 LVP-YV-0163 LVP-YV-0167	**(TAC)** Upon detection of a low pressure (≤ 35.7 psig) in the ISA, purge air to the exhauster shaft seals, the backup air supply is activated.		LFP, ISA, PCJ and PPJ systems.
3.9.2.8.4.1	Test to verify the failure position on loss (or simulated loss) of control signal or air to the valve (s): • Exhauster shaft seal air regulator bypass valves - fail in an OPEN position **CTNs** LVP-YV-0159 LVP-YV-0163 LVP-YV-0167	**(TAC)** Failed Offgas Exhauster 1A/1B/1C Shaft Seal Low Pressure interlocked components fail safe position on loss of control signal or air.		
3.9.2.9.1	Test to verify the interlock actions to open the melter primary and standby offgas film cooler air inbleed valves no sooner than 120 seconds after termination of film cooler air. **CTNs** LOP-YV-1401 LOP-YV-1402 LOP-YV-1406 LOP-YV-1407 LOP-YV-2401 LOP-YV-2402 LOP-YV-2406 LOP-YV-2407	**(TAC)** Melter primary and standby offgas film cooler air inbleed valves open no sooner than 120 seconds after termination of film cooler air	Tested in conjunction with LMP tests	
3.9.2.9.1	Test to verify the following functions are performed upon detection of high pressure (reduced vacuum) in the melter plenum: • Stops air and water flow to the associated primary and standby film coolers. • Opens the associated primary and standby film cooler emergency air inbleeds. • Opens the associated bypass valve from the standby film cooler to the SBS. • Stops air flow to the associated WESP.	**(TAC)** Upon detection of high melter plenum pressure exceeding -0.1 in w.g. (relative to the annulus) • Shuts primary and standby film cooler air • Shuts primary and standby film cooler water • Shuts WESP air • Open standby offgas bypass line • Open primary and standby offgas film cooler air inbleed • Open WESP outlet valve	The PPJ, LMP, and LOP systems are required to be operational to perform this test. Tested in conjunction with LMP tests	

Requirement (para #)	Plan (including SSCs)	Acceptance Criteria (test acceptance criteria (TAC) or general test criteria (GTC))*	Notes/Comments	Test Conditions
	CTNs LMP-PDT-1528 LMP-PDT-1529 LOP-YV-1129 LOP-YV-1404 LOP-YV-1109 LOP-YV-1405 LOP-YV-1098 LOP-YV-1161 LOP-YV-1008 LOP-YV-1401 LOP-YV-1407 LOP-YV-1402 LOP-YV-1406 LOP-FV-1140 LMP-PDT-2528 LMP-PDT-2529 LOP-YV-2129 LOP-YV-2404 LOP-YV-2109 LOP-YV-2405 LOP-YV-2098 LOP-YV-2161 LOP-YV-2008 LOP-YV-2401 LOP-YV-2407 LOP-YV-2402 LOP-YV-2406 LOP-FV-2140			
3.9.2.9.1.1	Test to verify the failure position on loss (or simulated loss) of control signal or air to the valve (s): • Melter 1 and 2 Film Cooler Wash Supply Valves – fail in CLOSED position • Melter 1 and 2 WESP Purge Air Valves – fail in a CLOSED position • Melter 1 and 2 Film Cooler Air Supply Valves – fail in a CLOSED position • Melter 1 and 2 Standby Film Cooler Isolation valves – fails in an OPEN position • Melter 1 and 2 Primary Film Cooler Emergency Air Inbleed Valves – fail in an OPEN position • Melter 1 and 2 Standby Film Cooler Emergency Air Inbleed Valves – fail in an OPEN position • Melter 1 and 2 Offgas Flow Control Valves – fail in an OPEN position **CTNs** LOP-YV-1129 LOP-YV-1404 LOP-YV-1109 LOP-YV-1405 LOP-YV-1098 LOP-YV-1161	**(TAC)** Failed LMP Melter Plenum High Pressure interlocked components fail safe position on loss of control signal or air.		

Requirement (para #)	Plan (including SSCs)	Acceptance Criteria (test acceptance criteria (TAC) or general test criteria (GTC))*	Notes/Comments	Test Conditions
	LOP-YV-1008 LOP-YV-1401 LOP-YV-1407 LOP-YV-1402 LOP-YV-1406 LOP-FV-1140 LOP-YV-2129 LOP-YV-2404 LOP-YV-2109 LOP-YV-2405 LOP-YV-2098 LOP-YV-2161 LOP-YV-2008 LOP-YV-2401 LOP-YV-2407 LOP-YV-2402 LOP-YV-2406 LOP-FV-2140			
3.9.2.10.1.1	Test to demonstrate that within 5 minutes of detection of sustained loss of normal power, the interlock performs the following and maintains event duration within capacity of the UPE: • Close Film cooler water valves **CTNs** UPE-YY-2303 UPE-YY-2403 UPE-YY-2503 LOP-YV-1109 LOP-YV-1405 LOP-YV-2109 LOP-YV-2405	**(TAC)** Upon detection of loss of normal power to the offgas exhausters the interlock actions were performed within 5 minutes of a sustained loss of power and maintained for the event duration within capacity of the UPE		
3.9.2.10.1.2	Test to demonstrate that within 5 minutes of detection of sustained loss of normal power, the interlock performs the following and maintains event duration within capacity of the UPE: • Close film cooler air valves • Close WESP air valves • Open melter primary and standby offgas film cooler air inbleed valves no sooner than 80.5 sec after termination of film cooler air (to allow vacuum to be re-established in melter if lost). **CTNs** UPE-YY-2303 UPE-YY-2403 UPE-YY-2503 LOP-YV-1098 LOP-YV-1161 LOP-YV-2098	**(TAC)** Upon detection of loss of normal power to the offgas exhausters the interlock actions were performed within 5 minutes of a sustained loss of power and maintained for the event duration within capacity of the UPE		

Requirement (para #)	Plan (including SSCs)	Acceptance Criteria (test acceptance criteria (TAC) or general test criteria (GTC))*	Notes/Comments	Test Conditions
	LOP-YV-2161 LOP-YV-1129 LOP-YV-1404 LOP-YV-2129 LOP-YV-2404 LOP-YV-1401 LOP-YV-1407 LOP-YV-1402 LOP-YV-1406 LOP-YV-2401 LOP-YV-2407 LOP-YV-2402 LOP-YV-2406			
3.9.2.10.1.3	Test to demonstrate that within 5 minutes of detection of sustained loss of normal power, the interlock performs the following and maintains event duration within capacity of the UPE: • Open standby offgas line valve • Open WESP outlet valve • Close vessel vent isolation valve • Open carbon bed bypass valve • Open SCO/SCR bypass valve prior to the caustic scrubber bypass valve • Open caustic scrubber bypass valve **CTNs** UPE-YY-2303 UPE-YY-2403 UPE-YY-2503 LOP-YV-1008 LOP-YV-2008 LOP-YV-1140 LOP-YV-2140 LVP-PV-0072 LVP-YV-0403 LVP-YV-0501 LVP-YV-0097	**(TAC)** Upon detection of loss of normal power to the offgas exhausters the interlock actions were performed within 5 minutes of a sustained loss of power and maintained for the event duration within capacity of the UPE		
3.9.2.10.1.4	Test to demonstrate that within 5 minutes of detection of sustained loss of normal power, the interlock performs the following and maintains event duration within capacity of the UPE: • Close SCO/SCR dilution air supply valve • Close ammonia supply valve • Turn off SCO/SCR heater control **CTNs** UPE-YY-2303 UPE-YY-2403 UPE-YY-2503 LVP-YV-0538	**(TAC)** Upon detection of loss of normal power to the offgas exhausters the interlock actions were performed within 5 minutes of a sustained loss of power and maintained for the event duration within capacity of the UPE		

Requirement (para #)	Plan (including SSCs)	Acceptance Criteria (test acceptance criteria (TAC) or general test criteria (GTC))*	Notes/Comments	Test Conditions
	LVP-YV-0528 LVP-YV-0560 LVP-CTR-00002			
3.9.2.10.1.5	Test to demonstrate that within 5 minutes of detection of sustained loss of normal power, the interlock performs the following and maintains event duration within capacity of the UPE: • Set exhauster(s) to fixed speed (2020 RPM) • Open vacuum breaker line valves **CTNs** UPE-YY-2303 UPE-YY-2403 UPE-YY-2503 LVP-EXHR-00001A LVP-EXHR-00001B LVP-EXHR-00001C LVP-YV-0453 LVP-YV-0454	**(TAC)** Upon detection of loss of normal power to the offgas exhausters the interlock actions were performed within 5 minutes of a sustained loss of power and maintained for the event duration within capacity of the UPE		
3.9.2.10.1.6	Test to verify the failure position on loss (or simulated loss) of control signal or air to the valve (s): • Melter film cooler air supply valves - fail in a CLOSED position • Melter film cooler water supply valves - fail in a CLOSED position • WESP purge air valves - fail in a CLOSED position • Melter standby film cooler isolation valve - fails in an OPEN position • Melter 1 and 2 primary film cooler emergency air inbleed valves - fail in an OPEN position • Melter standby film cooler emergency air inbleed valves - fail in an OPEN position • Melter offgas flow control valve - fails in an OPEN position • Carbon bed adsorber bypass valve - fails in an OPEN position • Thermal catalytic oxidizer skid bypass valve - fails in an OPEN position • Ammonia dilution air supply valves - fail in a CLOSED position • Ammonia dilution ammonia supply valves - fail in a CLOSED position • Thermal catalytic oxidizer heater - fails in an OFFposition • Caustic scrubber bypass valve - fails in an OPEN position • Vacuum Breaker Line Valves - fail in an OPEN position • Offgas exhausters - fail in a minimum FIXED speed position (2020 RPM) **CTNs** LOP-YV-1129 LOP-YV-1404 LOP-YV-1109 LOP-YV-1405 LOP-YV-1098 LOP-YV-1161 LOP-YV-1008 LOP-YV-1401 LOP-YV-1407	**(TAC)** Failed Loss of Normal Power to Safety Equipment interlocked components fail safe position on loss of control signal or air.		

Requirement (para #)	Plan (including SSCs)	Acceptance Criteria (test acceptance criteria (TAC) or general test criteria (GTC))*	Notes/Comments	Test Conditions
	LOP-YV-1402 LOP-YV-1406 LOP-FV-1140 LFP-YV-2208 LFP-YV-2212 LFP-YV-2207 LFP-YV-2211 LOP-YV-2129 LOP-YV-2404 LOP-YV-2109 LOP-YV-2405 LOP-YV-2098 LOP-YV-2161 LOP-YV-2008 LOP-YV-2401 LOP-YV-2407 LOP-YV-2402 LOP-YV-2406 LOP-FV-2140 LVP-PV-0072, LVP-YV-0403 LVP-YV-0501 LVP-YV-0538 LVP-YV-0528 LVP-YV-0560 LVP-CTR-00002 LVP-YV-0097 LVP-EXHR-00001A LVP-EXHR-00001B LVP-EXHR-00001C LVP-YV-0453 LVP-YV-0454			
~~3.9.2.11~~	~~Test to verify the interlock will shed the identified electrical loads at a high temperature (temperature TBD) in the analyzer room (L-304G)~~ ~~CTNs~~ ~~TBD~~	~~**(TAC)**~~ ~~Upon detection of high temperature (temperature TBD) in the Analyzer room (L-0304G) identified loads are tripped~~		
~~3.9.2.12~~	~~Test to verify the capability of remotely monitoring LOP/LVP vessels pressure and effluent level.~~	~~**(GTC)**~~ ~~LAW LOP/LVP vessels effluent levels and pressures rea displayed on the PCG operator interfaces match the on the associated local indicators.~~	~~LAW LOP/LVP vessels liquid level and pressures are measured using inline local indicating instrumentation.~~	
3.9.2.15.1	Test to verify that the pneumatic permissive for the SCO/SCR skid bypass valve (LVP-YV-0501) • Opens before or at the same time the scrubber bypass valve (LVP-YV-0097) begins to open • Be in its end state open position prior to the caustic scrubber bypass valve (LVP-YV-0097) reaching its end state open position **CTNs:**	**(TAC)** LVP-YV-0501 opens before or at the same time that LVP-YV-0097 begins to open LVP-YV-0501 reaches its end state open position prior to LVP-YV-0097 reaching its end state open position		LVP is operational

Requirement (para #)	Plan (including SSCs)	Acceptance Criteria (test acceptance criteria (TAC) or general test criteria (GTC))*	Notes/Comments	Test Conditions
	LVP-YV-0097 LVP-YV-0501			
3.9.2.15.2	Test to verify that the pneumatic permissive for the carbon bed adsorber bypass valve (LVP-YV-0403) • Opens before or at the same time the carbon bed adsorber inlet valves (LVP-YV-0407, LVP-YV-0415, LVP-YV-0449) begins to close • Be in its end state open position prior to the carbon bed adsorber inlet valves (LVP-YV-0407, LVP-YV-0415, LVP-YV-0449) reaching their end state closed position **CTNs:** LVP-YV-0403 LVP-YV-0407 LVP-YV-0415 LVP-YV-0449	**(TAC)** LVP-YV-0403 opens before or at the same time LVP-YV-0407, LVP-YV-0415, LVP-YV-0449 begin to close LVP-YV-0403 reach its end state open position prior to LVP-YV-0407, LVP-YV-0415, and LVP-YV-0449 reaching their end state closed position		LVP is operational
3.10.2.4	Test to verify that LVP-RO-00002 limits flow to no greater than 3.9 SCFM of air. **CTNs:** LVP-RO-00002	**(TAC)** Return flow through the stack condensate drain is maintained less than or equal than 3.9 SCFM.		LVP is operational
3.10.2.5	Test to verify that LVP-RO-00001 limits flow to no greater than 26.7 scfm. **CTNs:** LVP-RO-00001	**(TAC)** Vessel vent header in-flow to the LVP header is maintained less than or equal than 26.7 SCFM.		LVP is operational
~~3.10.4.14~~	~~Verify automatic valve closure time meets the acceptance range to prevent water hammer.~~	~~**(GTC)**~~ ~~Upon actuation, the valve closure is a minimum of time established by the design of the valve and pipe diameter.~~	~~Use closure criteria as established in 24590-LAW-M6C-20-00007.~~	~~Automatic valve controls set to manual mode.~~ ~~Automatic valve in fully open position before start of test.~~

***Note:** Test acceptance criteria are based on requirements from authorization basis documents and general test criteria are requirements from other sources.

CTN = component tag number; GTC = general test criteria; TAC = test acceptance criteria

Appendix C ~~Active Safety Instruments and Functions~~Deleted

~~The listed instruments are designated as having active safety functions, implemented through interface with and programming in the PPJ system. Information in the following table reflects the current design of active safety instruments, including functions and safety designations per the P&IDs and associated equipment and instrument lists. In some cases, the current safety classification of the SSCs in design is known to exceed the design requirements. The information will be updated as needed to reflect changes to the design. The information below is provided in support of Plant Engineering and Operations and does not represent design requirements.~~

~~Function Title~~	~~Safety Designation~~	~~Sensors~~	~~Final Control Elements~~	~~Functional Description~~
~~Melter1 Plenum High Pressure~~	~~SS~~	~~LMP-PDT-1528, LMP-PDT-1529~~	~~LOP-YV-1129, LOP-YV-1404, LOP-YV-1109, LOP-YV-1405, LOP-YV-1098, LOP-YV-1161, LOP-YV-1008, LOP-YV-1401, LOP-YV-1407, LOP-YV-1402, LOP-YV-1406 LOP-FV-1140~~	~~The interlock limits the release of radioactive and chemically hazardous material by terminating melter feed to the affected melter in the event of melter pressurization.~~
~~Melter 1 Primary Film Cooler Low Flow~~	~~SS~~	~~LOP-FT-1408, LOP-FT-1409~~	~~LOP-YV-1401, LOP-YV-1407~~	~~The interlock reduces the probability of a release of radioactive and chemically hazardous material by preventing a failure of the offgas system confinement boundary caused by high offgas temperatures due to low film cooler air supply.~~
~~Melter 1 Standby Film Cooler Low Flow~~	~~SS~~	~~LOP-FT-1410, LOP-FT-1411~~	~~LOP-YV-1008, LOP-YV-1402, LOP-YV-1406~~	~~The interlock reduces the probability of a release of radioactive and chemically hazardous material by preventing a failure of the offgas system confinement boundary caused by high offgas temperatures due to low film cooler air supply.~~
~~Melter 1 WESP High Level~~	~~SS~~	~~LOP-LT-1059~~	~~LOP-YV-1061~~	~~The interlock reduces the probability of a release of radioactive and chemically hazardous material, due to a loss of melter vacuum, by preventing an obstruction in the offgas system caused by high WESP level.~~
~~Melter 1 SBS Low Level~~	~~SS~~	~~LOP-LT-1011~~	~~LFP-YV-1208, LFP-YV-1212, LOP-CTR-20003A, LOP-CTR-20003B~~	~~The interlock reduces the probability of a release of radioactive and chemically hazardous material by preventing a failure of the offgas system confinement boundary caused by high offgas temperatures.~~

~~Function Title~~	~~Safety Designation~~	~~Sensors~~	~~Final Control Elements~~	~~Functional Description~~
				~~The interlock limits the release of radioactive and chemically hazardous material ensuring offgas cannot flow through the SBS liquid barrier and cause a failure of the offgas exhaust system.~~
~~Melter 1 SBS High Level~~	~~SS~~	~~LOP-LT-1011~~	~~LOP-YV-1148, LOP-YV-1156, LOP-YV-1157. LFP-YV-1208, LFP-YV-1212 LFP-YV-1207 LFP-YV-1211~~	~~The interlock reduces the probability of a release of radioactive and chemically hazardous material by preventing a blockage of the offgas system at the SBS caused by high SBS liquid levels.~~
~~Melter 2 Plenum High Pressure~~		~~LMP-PDT-2528, LMP-PDT-2529~~	~~LOP-YV-2129, LOP-YV-2404, LOP-YV-2109, LOP-YV-2405, LOP-YV-2098, LOP-YV-2161, LOP-YV-2008, LOP-YV-2401, LOP-YV-2407, LOP-YV-2402, LOP-YV-2406 LOP-FV-2140~~	~~The interlock limits the release of radioactive and chemically hazardous material by terminating melter feed to the affected melter in the event of melter pressurization.~~
~~Melter 2 Primary Film Cooler Low Flow~~	~~SS~~	~~LOP-FT-2408, LOP-FT-2409~~	~~LOP-YV-2401, LOP-YV-2407~~	~~The interlock reduces the probability of a release of radioactive and chemically hazardous material by preventing a failure of the offgas system confinement boundary caused by high offgas temperatures due to low film cooler air supply.~~
~~Melter 2 Standby Film Cooler Low Flow~~	~~SS~~	~~LOP-FT-2410, LOP-FT-2411~~	~~LOP-YV-2008, LOP-YV-2402, LOP-YV-2406~~	~~The interlock reduces the probability of a release of radioactive and chemically hazardous material by preventing a failure of the offgas system confinement boundary caused by high offgas temperatures due to low film cooler air supply.~~
~~Melter 2 WESP High Level~~	~~SS~~	~~LOP-LT-2059~~	~~LOP-YV-2061~~	~~The interlock reduces the probability of a release of radioactive and chemically hazardous material, due to a loss of melter vacuum, by preventing an obstruction in the offgas system caused by high WESP level.~~
~~Melter 2 SBS Low Level~~	~~SS~~	~~LOP-LT-2011~~	~~LFP-YV-2208, LFP-YV-2212, LOP-CTR-20006A, LOP-CTR-20006B~~	~~The interlock reduces the probability of a release of radioactive and chemically hazardous material by preventing a failure of the offgas system~~

~~Function Title~~	~~Safety Designation~~	~~Sensors~~	~~Final Control Elements~~	~~Functional Description~~
				~~confinement boundary caused by high offgas temperatures.~~ ~~The interlock limits the release of radioactive and chemically hazardous material ensuring offgas cannot flow through the SBS liquid barrier and cause a failure of the offgas exhaust system.~~
~~Melter 2 SBS High Level~~	~~SS~~	~~LOP-LT-2011~~	~~LOP-YV-2148, LOP-YV-2156, LOP-YV-2157, LFP-YV-2208, LFP-YV-2212 LFP-YV-2207 LFP-YV-2211~~	~~The interlock reduces the probability of a release of radioactive and chemically hazardous material by preventing a blockage of the offgas system at the SBS caused by high SBS liquid levels.~~
~~Offgas HEPA Preheater High Temperature~~	~~SS~~	~~LVP-TT-0136, LVP-TT-0137~~	~~LVP-CTR-00001A, LVP-CTR-00003A, LVP-YV-0403, LVP-YV-0407, LVP-YV-0415, LVP-YV-0449~~	~~The interlock reduces the probability of a release of radioactive and chemically hazardous material, by preventing a failure of the offgas confinement boundary or an ignition of carbon bed media caused by high offgas temperatures.~~
~~Carbon Bed High Differential CO Concentration~~	~~SS~~	~~LVP-AT-0405, LVP-AT-0406, LVP-AT-0424, LVP-AT-0425~~	~~LVP-YV-0403, LVP-YV-0407, LVP-YV-0415, LVP-YV-0449~~	~~The interlock and associated support systems mitigates the release of chemically hazardous material in the event of a fire by detecting incipient mercury mitigation skid fire conditions and limiting oxygen flow to the carbon bed, thereby reducing the fire energy and the release rate.~~
~~TCO Heater High Temperature~~	~~SS~~	~~LVP-TT-0509, LVP-TT-0516~~	~~LVP-CTR-00002~~	~~The interlock reduces the probability of a release of radioactive and chemically hazardous material by preventing a failure of the offgas confinement boundary caused by high offgas temperatures.~~
~~TCO Skid High Temperature~~	~~SS~~	~~LVP-TT-0552, LVP-TT-0554~~	~~LVP-YV-0528, LVP-YV-0560, LVP-CTR-00002~~	~~The interlock reduces the probability of a release of radioactive and chemically hazardous material by preventing a failure of the offgas confinement boundary caused by high offgas temperatures.~~
~~Ammonia High Flow~~	~~SS~~	~~LVP-FT-0530, LVP-FT-0531~~	~~LVP-YV-0528, LVP-YV-0560~~	~~The interlock mitigates the release of ammonia caused by the ignition of an ignitable concentration of ammonia caused by excessive ammonia supply flow.~~
~~Ammonia Dilution Air Low Flow~~	~~SS~~	~~LVP-FT-0540, LVP-FT-0541~~	~~LVP-YV-0528, LVP-YV-0560~~	~~The interlock mitigates the release of ammonia caused by the ignition of an ignitable concentration of ammonia~~

~~Function Title~~	~~Safety Designation~~	~~Sensors~~	~~Final Control Elements~~	~~Functional Description~~
				~~resulting from inadequate air supply flow.~~
~~Caustic Scrubber Recirculation Low Pressure~~	~~SS~~	~~LVP-PT-0220~~	~~LVP-YV-0501, LVP-YV-0538, LVP-YV-0528, LVP-YV-0560, LVP-CTR-00002, LVP-YV-0219~~	~~The interlock reduces the probability of a release of radioactive and chemically hazardous material, due to a loss of melter vacuum, by preventing excessive air in-leakage into the offgas system from a failed recirculation line.~~
~~Caustic Scrubber Recirculation Low Flow~~	~~SS~~	~~LVP-FT-0221~~	~~LVP-YV-0501, LVP-YV-0538, LVP-YV-0528, LVP-YV-0560, LVP-CTR-00002~~	~~The interlock reduces the probability of a release of radioactive and chemically hazardous material by preventing a failure of the exhausters from caustic scrubber outlet high temperatures.~~
~~Caustic Scrubber Process Water Supply Low Pressure~~	~~SS~~	~~LOP-PT-0216~~	~~LVP-YV-0201~~	~~The interlock reduces the probability of a release of radioactive and chemically hazardous material by preventing a loss of LVP header vacuum due to excessive air in-leakage from a failed process water line in the caustic scrubber system.~~
~~Offgas Header High Pressure~~	~~SS~~	~~LOP-PT-0139, LOP-PT-0140~~	~~LFP-YV-1208, LFP-YV-1212 LFP-YV-1207, LFP-YV-1211 LOP-YV-1129, LOP-YV-1404 LOP-YV-1109, LOP-YV-1405, LOP-YV-1098, LOP-YV-1161, LOP-YV-1008, LOP-YV-1401, LOP-YV-1407, LOP-YV-1402, LOP-YV-1406, LOP-FV-1140, LFP-YV-2208, LFP-YV-2212, LFP-YV-2207, LFP-YV-2211, LOP-YV-2129, LOP-YV-2404, LOP-YV-2109, LOP-YV-2405, LOP-YV-2098, LOP-YV-2161,~~	~~The interlock limits the release of radioactive and chemically hazardous material by terminating melter feed to both melters, stopping ammonia supply, and reconfiguring the offgas system in the event of high or low pressure in the LVP header.~~

~~Function Title~~	~~Safety Designation~~	~~Sensors~~	~~Final Control Elements~~	~~Functional Description~~
			~~LOP-YV-2008,~~ ~~LOP-YV-2401,~~ ~~LOP-YV-2407,~~ ~~LOP-YV-2402,~~ ~~LOP-YV-2406,~~ ~~LOP-FV-2140,~~ ~~LVP-PV-0072,~~ ~~LVP-YV-0403,~~ ~~LVP-YV-0501,~~ ~~LVP-YV-0538,~~ ~~LVP-YV-0528,~~ ~~LVP-YV-0560,~~ ~~LVP-CTR-00002,~~ ~~LVP-YV-0097,~~ ~~LVP-YV-0453,~~ ~~LVP-YV-0454,~~ ~~LVP-EXHR-00001A,~~ ~~LVP-EXHR-00001B,~~ ~~LVP-EXHR-00001C~~	
~~Offgas Header Low Pressure~~	~~SS~~	~~LOP-PT-0139,~~ ~~LOP-PT-0140~~	~~LFP-YV-1208,~~ ~~LFP-YV-1212~~ ~~LFP-YV-1207,~~ ~~LFP-YV-1211~~ ~~LOP-YV-1129,~~ ~~LOP-YV-1404~~ ~~LOP-YV-1109,~~ ~~LOP-YV-1405,~~ ~~LOP-YV-1098,~~ ~~LOP-YV-1161,~~ ~~LOP-YV-1008,~~ ~~LOP-YV-1401,~~ ~~LOP-YV-1407,~~ ~~LOP-YV-1402,~~ ~~LOP-YV-1406,~~ ~~LOP-FV-1140,~~ ~~LFP-YV-2208,~~ ~~LFP-YV-2212,~~ ~~LFP-YV-2207,~~ ~~LFP-YV-2211,~~ ~~LOP-YV-2129,~~ ~~LOP-YV-2404,~~ ~~LOP-YV-2109,~~ ~~LOP-YV-2405,~~ ~~LOP-YV-2098,~~ ~~LOP-YV-2161,~~ ~~LOP-YV-2008,~~ ~~LOP-YV-2401,~~	~~The interlock limits the release of radioactive and chemically hazardous material by terminating melter feed to both melters, stopping ammonia supply, and reconfiguring the offgas system in the event of high or low pressure in the LVP header.~~

~~Function Title~~	~~Safety Designation~~	~~Sensors~~	~~Final Control Elements~~	~~Functional Description~~
			~~LOP-YV-2407,~~ ~~LOP-YV-2402,~~ ~~LOP-YV-2406,~~ ~~LOP-FV-2140,~~ ~~LVP-PV-0072,~~ ~~LVP-YV-0403,~~ ~~LVP-YV-0501,~~ ~~LVP-YV-0538,~~ ~~LVP-YV-0528,~~ ~~LVP-YV-0560,~~ ~~LVP-CTR-00002,~~ ~~LVP-YV-0097,~~ ~~LVP-YV-0453,~~ ~~LVP-YV-0454,~~ ~~LVP-EXHR-00001A,~~ ~~LVP-EXHR-00001B,~~ ~~LVP-EXHR-00001C~~	
~~Offgas Exhauster 1A/1B/1C Shaft Seal Air Supply Low Pressure~~	~~SS~~	~~LVP-PT-0156,~~ ~~LVP-PT-0160,~~ ~~LVP-PT-0164~~	~~LFP-YV-1208,~~ ~~LFP-YV-1212,~~ ~~LFP-YV-2208,~~ ~~LFP-YV-2212,~~ ~~LVP-YV-0157,~~ ~~LVP-YV-0161,~~ ~~LVP-YV-0165,~~	~~The interlock mitigates the release of radioactive and chemically hazardous material through the exhauster shaft seals by supplying back-up air pressure to the exhauster shaft seals.~~
~~Offgas Exhauster 1A/1B/1C Shaft Seal Low Pressure~~	~~SS~~	~~LVP-PT-0158,~~ ~~LVP-PT-0162,~~ ~~LVP-PT-0166~~	~~LVP-YV-0159,~~ ~~LVP-YV-0163,~~ ~~LVP-YV-0167~~	~~The interlock limits the release of radioactive and chemically hazardous material through the exhauster shaft seals by supplying back-up air pressure to the exhauster shaft seals.~~
~~Loss of Normal Power to Safety Equipment~~	~~SS~~	~~UPE-YY-2303,~~ ~~UPE-YY-2403,~~ ~~UPE-YY-2503~~	~~LFP-YV-1208,~~ ~~LFP-YV-1212,~~ ~~LFP-YV-1207,~~ ~~LFP-YV-1211,~~ ~~LOP-YV-1129,~~ ~~LOP-YV-1404,~~ ~~LOP-YV-1109,~~ ~~LOP-YV-1405,~~ ~~LOP-YV-1098,~~ ~~LOP-YV-1161,~~ ~~LOP-YV-1008,~~ ~~LOP-YV-1401,~~ ~~LOP-YV-1407,~~ ~~LOP-YV-1402,~~ ~~LOP-YV-1406,~~ ~~LOP-FV-1140,~~ ~~LFP-YV-2208,~~ ~~LFP-YV-2212,~~	~~The interlock limits the release of radioactive and chemically hazardous material, in the event of loss of normal power, by terminating feed to both melters, stopping ammonia supply, and reconfiguring the offgas system in the event of a loss of normal power.~~

~~Function Title~~	~~Safety Designation~~	~~Sensors~~	~~Final Control Elements~~	~~Functional Description~~
			~~LFP-YV-2207,~~ ~~LFP-YV-2211,~~ ~~LOP-YV-2129,~~ ~~LOP-YV-2404,~~ ~~LOP-YV-2109,~~ ~~LOP-YV-2405,~~ ~~LOP-YV-2098,~~ ~~LOP-YV-2161,~~ ~~LOP-YV-2008,~~ ~~LOP-YV-2401,~~ ~~LOP-YV-2407,~~ ~~LOP-YV-2402,~~ ~~LOP-YV-2406,~~ ~~LOP-FV-2140,~~ ~~LVP-PV-0072,~~ ~~LVP-YV-0403,~~ ~~LVP-YV-0501,~~ ~~LVP-YV-0538,~~ ~~LVP-YV-0528,~~ ~~LVP-YV-0560,~~ ~~LVP-CTR-00002,~~ ~~LVP-YV-0097,~~ ~~LVP-EXHR-00001A,~~ ~~LVP-EXHR-00001B,~~ ~~LVP-EXHR-00001C,~~ ~~LVP-YV-0453,~~ ~~LVP-YV-0454~~	

Appendix F Programmatic

Table ~~5~~F-1 Tier 1 and 2 Programmatic (Non-Design) WTP LOP/LVP System Requirements

Section #	Section 3 Requirement Paragraph Reference (or N/A)	Requirement Source	Requirement	Document in which implemented (TBD until doc developed)
WTP Contract				
F-1	N/A	N/A	N/A	N/A
Nuclear Safety (e.g., TSR, Specific Administrative Controls)				
F-2	N/A	N/A~~Section 3.4.1.1.1.6, LAW PDSA~~	N/A~~Demineralized water supply to the SBS and SBS condensate vessel wash rings and spray wands shall be isolated by blind flange whenever a cold cap is present in any melter~~	N/A~~**TBD**~~
F-3	N/A	N/A~~Section 5.5.10, LAW PDSA~~	N/A~~To avoid excessively high heater temperatures that could lead to the failure of the melter offgas confinement boundary and result in a melter offgas release event, surveillances related to the limiting condition for operation include periodic calibration of the temperature monitor to ensure accurate activation of the heater interlock. In addition, periodic functional testing of the heater interlock is necessary to ensure its proper function.~~	N/A~~**TBD**~~

Attachment 7
18-ECD-0078
(63 Pages Excluding Cover Sheet)

24590-LAW-3ZN-LOP-00007, *Add Construction and Installation Certification Requirements to 24590-LAW-3ZD-LOP-00001*

ISSUED BY
RPP-WTP PDC

System Design Description Change Notice

CHANGE DOCUMENT NO. 24590-LAW-3ZN-LOP-00007

JOB NO.	TITLE FOR CHANGE NOTICE
24590	Add Construction and Installation Certification Requirements to 24590-LAW-3ZD-LOP-00001

DOCUMENT NUMBER	REV	DOCUMENT NUMBER	REV
24590-LAW-3ZD-LOP-00001	1		

PART OF DESIGN CHANGE PACKAGE (DCP)? ☐ Yes ☒ No

Justification for no DCP: Impacted SSC has not been turned over to the Plant Management organization.

INCORPORATES AN EIE? ☐ Yes ☒ No If yes, list EIEs:

JUSTIFICATION FOR CHANGE

Treatment, storage or disposal of dangerous waste in the LAW LOP system cannot commence until the requirement to certify the LAW LOP system has been constructed in accordance with the WTP Dangerous Waste Permit. The addition of Section 3.11 of the LAW LOP SDD will facilitate the development of a Special RVM to submit to Washington State Department of Ecology as proof of construction certification.

Supersedes Change Document ☐ Yes ☒ No

REQUIREMENTS REVIEW

Client Approval Required ☐ Yes ☒ No | Interface Resolution Required * ☐ Yes ☒ No

Address any "yes" answers in the description

DESCRIPTION OF CHANGE

1. Add Section 3.11 as shown in Attachment.
2. The following changes are added (underlined) or deleted (~~strikethrough~~).
   - **1.5.1 Acronyms**
     SRVM specialized requirements verification matrix
   - **3.~~11~~12 Relevant Codes and Standards**
   - **3.~~11~~12.1 Codes of Record**
   - Table 3-~~5~~37 identifies relevant external codes and standards applicable to the LOP and LVP design. Use of 24590-WTP-COR-MGT-15-00001, *Engineering, Procurement, and Construction (EPC) Code of Record* (EPC Code of Record), is typically invoked in the design process through the documents identified in Section 13.~~11~~12.2
   - **Table 3-~~5~~37 LOP and LVP Applicable Codes and Standards**
   - **3.~~11~~12.2 WTP Design Criteria, Design Guides, and General Specifications**
   - Table 3-~~6~~38 identifies relevant discipline design criteria, guides, and general specifications applicable to the LOP and LVP Systems.
   - **Table 3-~~6~~38 WTP Design Guides, and General Specifications Applicable to LOP and LVP**

ORIGINATOR	CHECKER
Systems Engineering – David Mears 5/14/2018	Rhett Tranbarger 5/14/2018

E-MAIL VALIDATION

Validation:	Environmental Protection	Barry Curn		5/15/2018
	Organization/Area of Responsibility	*Print/Type Name*	*Signature*	*Date*
Concurrence:				
	Title	*Print/Type Name*	*Signature*	*Date*
Concurrence:	Engineering Manager and Design Authority	Ian Milgate		5/15/18
	Title	*Print/Type Name*	*Signature*	*Date*
Approval:	Systems Engineering Manager	Sarah Barker		5·29·18
	Title	*Print/Type Name*	*Signature*	*Date*

3.11 Dangerous Waste Permit (DWP) and Washington Administrative Code (WAC) for the LOP and LVP

The requirements delineated in this section are construction and installation certification requirements and do not include design or operational requirements. These WTP construction certification requirements will document that the WTP Dangerous Waste Management Units have been constructed in accordance with the WTP – Operating Unit Group 10 DWP requirements, Permit Number WA7890008967, Condition III.10.C.2.a and Washington Administrative Code (WAC) 173-303-810(14)(a).

3.11.1 Melters 1 & 2 Film Coolers

3.11.1.1 LOP Melter Film Cooler Construction

Requirement: The Permittees will construct the LAW melter film coolers listed in Permit Tables III.10.H.A and B. (see Table 3-5), as approved/modified pursuant to Permit Condition III.10.H.5, as specified in Permit Condition III.10.H.1 and Operating Unit Group 10, Chapter 4 of this Permit, and Operating Unit Group 10, Appendices 9.1 through 9.15 and 9.17 of this Permit, as approved pursuant to Permit Conditions III.10.H.5.a. through d., and III.10.H.5.f.

Table 3-5 LAW Melter Film Coolers Construction

Component Number/Location	Description	Material
LOP-FCLR-00001 L-0112	Melter 1 Primary Film Cooler	Stainless Steel
LOP-FCLR-00002 L-0112	Melter 1 Standby Film Cooler	Stainless Steel
LOP-FCLR-00003 L-0112	Melter 2 Primary Film Cooler	Stainless Steel
LOP-FCLR-00004 L-0112	Melter 2 Standby Film Cooler	Stainless Steel

[Sections III.10.H.1.a.i, III.10.H.1.a.ii, III.10.I.a.i, III.10.I.a.ii, Table III.10.H.A, Chp. 4E, Table 4E-2, DWP]

Basis Discussion: Important containment features are delineated and described in these appendices with some specifics covered by construction requirements identified in this document.

Verification: Construction/installation verification is expected to be achieved through the following:

Verif. Method	Verif. By	Plan	Notes/Comments
R	**ENV**	Review completed independent qualified inspector installation packages.	

3.11.1.2 Handling and Installation Procedures

Requirement: The Permittees must ensure that proper handling procedures are adhered to in order to prevent damage to the LAW melters submerged bed scrubbers during installation. Prior to covering, enclosing, or placing the new LAW melter film coolers or component in use, an independent, qualified, installation inspector or an independent, qualified, registered professional engineer, either of whom is trained and experienced in the proper installation of similar systems or components, must inspect the system for the presence of any of the following items:

- Weld breaks.
- Punctures.
- Scrapes of protective coatings.
- Cracks.
- Corrosion.
- Other structural damage or inadequate construction/installation.

All discrepancies must be remedied before the LAW Vitrification System is covered, enclosed, or placed in use [WAC 173-303-640(3)(c), in accordance with WAC 173-303-680(2) and (3)]. [Section III.10.H.1.a.iv, III.10.I.1.a.iv, DWP]

Basis Discussion: This requirement is derived from the Washington Administrative Code (WAC) Dangerous Waste Regulations at WAC Chapter 173-303, specifically the Tank System regulations in WAC 173-303-680. These regulatory requirements have been incorporated into the Dangerous Waste Permit, WTP- Operating Unit Group 10, WA 7890008967, as permit conditions III.10.H.1.a.iv and III.10.I.1.a.iv.

Verification: Construction/installation verification is expected to be achieved through the following:

Verif. Method	Verif. By	Plan	Notes/Comments
R	**ENV**	Perform a review of the design to verify the material of construction, dimensions and location.	

3.11.1.3 Test for Tightness

Requirement: The Permittees must test for tightness the LAW melter film coolers, prior to being covered, enclosed, or placed into use. If the LAW Vitrification System or components are found not to be tight, all repairs necessary to remedy the leak(s) in the system must be performed prior to the LAW Vitrification System being covered, enclosed, or placed in use [WAC 173-303-640(3)(e), in accordance with WAC 173-303-680(2) and (3)]. [Section III.10.H.1.a.vi, DWP]

Basis Discussion: This requirement is derived from the Washington Administrative Code (WAC) Dangerous Waste Regulations at WAC Chapter 173-303, specifically the Tank System regulations in WAC 173-303-680. These regulatory requirements have been incorporated into the Dangerous Waste Permit, WTP- Operating Unit Group 10, WA 7890008967, as permit condition III.10.H.1.a.vi.

Verification: Construction/installation verification is expected to be achieved through the following:

Verif. Method	Verif. By	Plan	Notes/Comments
R	**ENV**	Review completed independent qualified inspector installation packages.	

3.11.1.4 Support and Protection

Requirement: The Permittees must ensure the LAW melter film coolers are supported and protected against physical damage and excessive stress due to settlement, vibration, expansion, or contraction [WAC 173-303-640(3)(f), in accordance with WAC 173-303-680(2) and (3)]. [Section III.10.H.1.a.vii, DWP]

Basis Discussion: This requirement is derived from the Washington Administrative Code (WAC) Dangerous Waste Regulations at WAC Chapter 173-303, specifically the Tank System regulations in WAC 173-303-680. These regulatory requirements have been incorporated into the Dangerous Waste Permit, WTP- Operating Unit Group 10, WA 7890008967, as permit condition III.10.H.1.a.vii.

Verification: Construction/installation verification is expected to be achieved through the following:

Verif. Method	Verif. By	Plan	Notes/Comments
R	**ENV**	Review completed installation packages and nonconformance reports and construction deficiency reports to confirm the plant was constructed in accordance with the approved designs, plans and specifications.	

3.11.1.5 Corrosion Protection

Requirement: The Permittees must provide the type and degree of corrosion protection recommended by an independent corrosion expert, based on the information provided in Operating Unit Group 10, Appendices 9.9 and 9.11 of this Permit, as approved pursuant to Permit Conditions III.10.H.5.b.i., III.10.H.5.b.iv., III.10.H.5.b.v., III.10.H.5.c.i., III.10.H.5.c.iv., III.10.H.5.c.v., III.10.H.5.d.i., III.10.H.5.d.iv., and III.10.H.5.d.v., or other corrosion protection if Ecology believes other corrosion protection is necessary to ensure the integrity of the LAW melter film coolers during use of the LAW Vitrification System. The installation of a corrosion protection system that is field fabricated must be supervised by an independent corrosion expert to ensure proper installation [WAC 173-303-640(3)(g), in accordance with WAC 173-303-680(2) and (3)]. [Section III.10.H.1.a.viii, DWP]

Basis Discussion: This requirement is derived from the Washington Administrative Code (WAC) Dangerous Waste Regulations at WAC Chapter 173-303, specifically the Tank System regulations in WAC 173-303-680. These regulatory requirements have been incorporated into the Dangerous Waste Permit, WTP- Operating Unit Group 10, WA 7890008967, as permit condition III.10.H.1.a.viii.

This requirement is not applicable to tank systems with components that are not in contact with soil or water.

Verification: Construction/installation verification is expected to be achieved through the following:

Verif. Method	Verif. By	Plan	Notes/Comments
R	**ENV**	Review the independent corrosion engineering report to verify the system meets the recommendations.	

3.11.1.6 Monitors and Instrumentation

Requirement: All process monitors/instruments, as specified in Permit Table III.10.H.F (Table 3-6), as approved/modified pursuant to Permit Condition III.10.H.5., will be equipped with operational alarms to warn of deviation, or imminent deviation from the limits specified in Permit Table III.10.H.F. [Sections III.10.H.1.a.xiii, III.10.I.1.vii, Table III.10.H.F, DWP]

Table 3-6 LAW Vitrification System Waste Feed Cutoff Parameters* 1 (RESERVED)

Sub-system Designation	Instrument Tag Number	Parameter Description
RESERVED	RESERVED	RESERVED

Basis Discussion: None.

Verification: Construction/installation verification is expected to be achieved through the following:

Verif. Method	Verif. By	Plan	Notes/Comments
R	**ENV**	Review completed Instrument data sheets to verify instrument installation in accordance with the requirement.	

3.11.1.7 Prevention of Escaping Emissions

Requirement: The melter film coolers is constructed with features that prevent escape of vapors, fumes, or other emissions into the air. [WAC 173-303-806(4)(i)(i)(B) and WAC 173-303-640(5)(e), in accordance with WAC 173-303-680]. [Section III.10.H.1.a.xxix, DWP]

Basis Discussion: This requirement is derived from the Washington Administrative Code (WAC) Dangerous Waste Regulations at WAC Chapter 173-303, specifically the Tank System regulations in WAC 173-303-680. These regulatory requirements have been incorporated into the Dangerous Waste Permit, WTP- Operating Unit Group 10, WA 7890008967, as permit condition III.10.H.1.a.xxix.

Verification: Construction/installation verification is expected to be achieved through the following:

Verif. Method	Verif. By	Plan	Notes/Comments
R	**ENV**	Review as-built P&IDs to verify the system has a vapor collection system and has been constructed according to the design.	

3.11.2 LOP Scrubbers

3.11.2.1 Melters Submerged Bed Scrubbers Construction

Requirement: The Permittees will construct the LAW melters submerged bed scrubbers listed in Permit Tables III.10.H.A and B. (see Table 3-7), as approved/modified pursuant to Permit Condition III.10.H.5, as specified in Permit Condition III.10.H.1 and Operating Unit Group 10, Chapter 4 of this Permit, and Operating Unit Group 10, Appendices 9.1 through 9.15 and 9.17 of this Permit, as approved pursuant to Permit Conditions III.10.H.5.a. through d., and III.10.H.5.f.

Table 3-7 Submerged Bed Scrubbers Construction

Component Number/Location	Description	Material	Total Volume (US Gallons)
LOP-SCB-00001 L-0123	Melter 1 Submerged Bed Scrubber	Ceramic Packing/Hastelloy	4,948
LOP-SCB-00002 L-0124	Melter 2 Submerged Bed Scrubber	Ceramic Packing/Hastelloy	4,948

[Sections III.10.H.1.a.i, III.10.H.1.a.ii, III.10.I.a.i, III.10.I.a.ii, Table III.10.H.A, Chp. 4E, Table 4E-2, DWP]

Basis Discussion: Important containment features are delineated and described in these appendices with some specifics covered by construction requirements identified in this document.

Verification: Construction/installation verification is expected to be achieved through the following:

Verif. Method	Verif. By	Plan	Notes/Comments
R	**ENV**	Review completed independent qualified inspector installation packages.	

3.11.2.2 Handling and Installation Procedures

Requirement: The Permittees must ensure that proper handling procedures are adhered to in order to prevent damage to the LAW melters submerged bed scrubbers during installation. Prior to covering, enclosing, or placing the new LAW melters submerged bed scrubbers or component in use, an independent, qualified, installation inspector or an independent, qualified, registered professional engineer, either of whom is trained and experienced in the proper installation of similar systems or components, must inspect the system for the presence of any of the following items:

- Weld breaks.
- Punctures.
- Scrapes of protective coatings.
- Cracks.
- Corrosion.
- Other structural damage or inadequate construction/installation.

All discrepancies must be remedied before the LAW Vitrification System is covered, enclosed, or placed in use [WAC 173-303-640(3)(c), in accordance with WAC 173-303-680(2) and (3)]. [Section III.10.H.1.a.iv, III.10.I.1.a.iv, DWP]

Basis Discussion: This requirement is derived from the Washington Administrative Code (WAC) Dangerous Waste Regulations at WAC Chapter 173-303, specifically the Tank System regulations in WAC 173-303-680. These regulatory requirements have been incorporated into the Dangerous Waste Permit, WTP- Operating Unit Group 10, WA 7890008967, as permit condition III.10.H.1.a.iv and III.10.I.1.a.iv.

Verification: Construction/installation verification is expected to be achieved through the following:

Verif. Method	Verif. By	Plan	Notes/Comments
R	**ENV**	Review completed independent qualified inspector installation packages.	

3.11.2.3 Test for Tightness

Requirement: The Permittees must test for tightness the LAW melters submerged bed scrubbers, prior to being covered, enclosed, or placed into use. If the LAW melters submerged bed scrubbers are found not to be tight, all repairs necessary to remedy the leak(s) in the system must be performed prior to the LAW Vitrification System being covered, enclosed, or placed in use [WAC 173-303-640(3)(e), in accordance with WAC 173-303-680(2) and (3)]. [Section III.10.H.1.a.vi, DWP]

Basis Discussion: This requirement is derived from the Washington Administrative Code (WAC) Dangerous Waste Regulations at WAC Chapter 173-303, specifically the Tank System regulations in WAC 173-303-680. These regulatory requirements have been incorporated into the Dangerous Waste Permit, WTP- Operating Unit Group 10, WA 7890008967, as permit condition Section III.10.H.1.a.vi.

Verification: Construction/installation verification is expected to be achieved through the following:

Verif. Method	Verif. By	Plan	Notes/Comments
R	**ENV**	Review completed installation packages documentation to ensure the tightness testing was completed.	

3.11.2.4 Support and Protection

Requirement: The Permittees must ensure the LAW melters submerged bed scrubbers are supported and protected against physical damage and excessive stress due to settlement, vibration, expansion, or contraction [WAC 173-303-640(3)(f), in accordance with WAC 173-303-680(2) and (3)]. [Section III.10.H.1.a.vii, DWP]

Basis Discussion: This requirement is derived from the Washington Administrative Code (WAC) Dangerous Waste Regulations at WAC Chapter 173-303, specifically the Tank System regulations in WAC 173-303-680. These regulatory requirements have been incorporated into the Dangerous Waste Permit, WTP- Operating Unit Group 10, WA 7890008967, as permit condition III.10.H.1.a.vii.

Verification: Construction/installation verification is expected to be achieved through the following:

Verif. Method	Verif. By	Plan	Notes/Comments
R	**ENV**	Review completed installation packages documentation to ensure the tightness testing was completed.	

3.11.2.5 Corrosion Protection

Requirement: The Permittees must provide the type and degree of corrosion protection recommended by an independent corrosion expert, based on the information provided in Operating Unit Group 10, Appendices 9.9 and 9.11 of this Permit, as approved pursuant to Permit Conditions III.10.H.5.b.i., III.10.H.5.b.iv., III.10.H.5.b.v., III.10.H.5.c.i., III.10.H.5.c.iv., III.10.H.5.c.v., III.10.H.5.d.i., III.10.H.5.d.iv., and III.10.H.5.d.v., or other corrosion protection if Ecology believes other corrosion protection is necessary to ensure the integrity of the LAW melters submerged bed scrubbers during use of the LAW Vitrification System. The installation of a corrosion protection system that is field fabricated must be supervised by an independent corrosion expert to ensure proper installation [WAC 173-303-640(3)(g), in accordance with WAC 173-303-680(2) and (3)]. [Section III.10.H.1.a.viii, DWP]

Basis Discussion: This requirement is derived from the Washington Administrative Code (WAC) Dangerous Waste Regulations at WAC Chapter 173-303, specifically the Tank System regulations in WAC 173-303-680. These regulatory requirements have been incorporated into the Dangerous Waste Permit, WTP- Operating Unit Group 10, WA 7890008967, as permit condition III.10.H.1.a.viii.

This requirement is not applicable to tank systems with components that are not in contact with soil or water.

Verification: Construction/installation verification is expected to be achieved through the following:

Verif. Method	Verif. By	Plan	Notes/Comments
R	**ENV**	Review completed installation packages to verify the requirements corrosion protection are met.	

3.11.2.6 Scrubbers Overflow Prevention Controls

Requirement: The LOP scrubbers shall be constructed with the appropriate instrumentation to allow for the control and prevention of overflow from the tank or containment systems. See Table 3-8 for the overflow instruments.

Table 3-8 LOP Scrubber Overflow Prevention Controls

Monitoring/Control Parameter	Type of Instrument/Control Device	Instrument/Control Device Tag Number
Melter 1 Scrubber LOP-SCB-00001	Level Transmitters	LT-1063Z LT-1011Z
	Level Indicators	LI-1063Z LI-1011Z
	Level Switch High High	LSHH-1063Z
	Level Switch Low Low	LSLL-1063Z
	Level Alarm High High	LAHH-1063Z
Melter 2 Scrubber LOP-SCB-00002	Level Transmitter	LT-2063Z LT-2011Z
	Level Indicators	LI-2063Z LI-2011Z
	Level Switch High High	LSHH-2063Z
	Level Switch Low Low	LSLL-2063Z
	Level Alarm High High	LAHH-2063Z

[Section III.10.E.9.e.iv, III.10.H.1.a.xvii, DWP]

Basis Discussion: Table 3-8 is developed from 24590-LAW-PER-J-03-003, *System Logic Description for Low-Activity Waste Facility – LAW Primary Offgas Process (LOP) System.* This requirement is derived from the Washington Administrative Code (WAC) Dangerous Waste Regulations at WAC Chapter 173-303, specifically the Tank System regulations in WAC 173-303-640(5)(b). These regulatory requirements have been incorporated into the Dangerous Waste Permit, WTP- Operating Unit Group 10, WA 7890008967, as permit conditions III.10.E.9.e.iv and III.10.H.1.a.xvii.

Verification: Construction/installation verification is expected to be achieved through the following:

Verif. Method	Verif. By	Plan	Notes/Comments
R	**ENV**	Review the Instrument Data Sheets for the instruments to verify Instruments in Table 3-8.	

3.11.2.7 Monitors and Instrumentation

Requirement: All process monitors/instruments, as specified in Permit Table III.10.H.F (see Table 3-9), as approved/modified pursuant to Permit Condition III.10.H.5., will be equipped with operational alarms to warn of deviation, or imminent deviation from the limits specified in Permit Table III.10.H.F. [Sections III.10.H.1.a.xiii, III.10.I.1.vii, Table III.10.H.F, DWP]

Table 3-9 LAW Vitrification System Waste Feed Cutoff Parameters* 1 (RESERVED)

Sub-system Designation	Instrument Tag Number	Parameter Description
RESERVED	RESERVED	RESERVED

Basis Discussion: None.

Verification: Construction/installation verification is expected to be achieved through the following:

Verif. Method	Verif. By	Plan	Notes/Comments
R	**ENV**	Review completed installation packages to verify instrument installation in accordance with the requirement.	

3.11.2.8 Prevention of Escaping Emissions

Requirement: The LOP scrubbers is constructed with features that prevent escape of vapors, fumes, or other emissions into the air. [WAC 173-303-806(4)(i)(i)(B) and WAC 173-303-640(5)(e), in accordance with WAC 173-303-680] [Section III.10.H.1.a.xxix, DWP]

Basis Discussion: This requirement is derived from the Washington Administrative Code (WAC) Dangerous Waste Regulations at WAC Chapter 173-303, specifically the Tank System regulations in WAC 173-303-640. These regulatory requirements have been incorporated into the Dangerous Waste Permit, WTP- Operating Unit Group 10, WA 7890008967, as permit condition III.10.H.1.a.xxix.

Verification: Construction/installation verification is expected to be achieved through the following:

Verif. Method	Verif. By	Plan	Notes/Comments
R	**ENV**	Review as-built P&IDs to verify the system has a vapor collection system and has been constructed according to the design.	

3.11.3 LOP Wet Electrostatic Precipitators

3.11.3.1 Wet Electrostatic Precipitators Construction

Requirement: The Permittees will construct the LAW wet electrostatic precipitators listed in Permit Tables III.10.H.A and B. (see Table 3-10), as approved/modified pursuant to Permit Condition III.10.H.5, as specified in Permit Condition III.10.H.1 and Operating Unit Group 10, Chapter 4 of this Permit, and Operating Unit Group 10, Appendices 9.1 through 9.15 and 9.17 of this Permit, as approved pursuant to Permit Conditions III.10.H.5.a. through d., and III.10.H.5.f.

Table 3-10 Wet Electrostatic Precipitators Construction

Component Number/Location	Description	Material
LOP-WESP-00001 L-0123	Melter 1 Wet Electrostatic Precipitator	6% Molybedenum/Stainless Steel

Component Number/Location	Description	Material
LOP-WESP-00002 L-0124	Melter 2 Wet Electrostatic Precipitator	6% Molybedenum/Stainless Steel

[Sections III.10.H.1.a.i, III.10.H.1.a.ii, III.10.I.a.i, III.10.I.a.ii, Table III.10.H.A, Chp. 4E, Table 4E-2, DWP]

Basis Discussion: Important containment features are delineated and described in these appendices with some specifics covered by construction requirements identified in this document.

Verification: Construction/installation verification is expected to be achieved through the following:

Verif. Method	Verif. By	Plan	Notes/Comments
R	**ENV**	Review completed independent qualified inspector installation packages.	

3.11.3.2 Handling and Installation Procedures

Requirement: The Permittees must ensure that proper handling procedures are adhered to in order to prevent damage to the LAW wet electrostatic precipitators during installation. Prior to covering, enclosing, or placing the new LAW wet electrostatic precipitators in use, an independent, qualified, installation inspector or an independent, qualified, registered professional engineer, either of whom is trained and experienced in the proper installation of similar systems or components, must inspect the system for the presence of any of the following items:

- Weld breaks.
- Punctures.
- Scrapes of protective coatings.
- Cracks.
- Corrosion.
- Other structural damage or inadequate construction/installation.

All discrepancies must be remedied before the LAW Vitrification System is covered, enclosed, or placed in use [WAC 173-303-640(3)(c), in accordance with WAC 173-303-680(2) and (3)]. [Section III.10.H.1.a.iv, III.10.I.1.a.iv, DWP]

Basis Discussion: This requirement is derived from the Washington Administrative Code (WAC) Dangerous Waste Regulations at WAC Chapter 173-303, specifically the Tank System regulations in WAC 173-303-640. These regulatory requirements have been incorporated into the Dangerous Waste Permit, WTP- Operating Unit Group 10, WA 7890008967, as permit condition III.10.I.1.a.iv.

Verification: Construction/installation verification is expected to be achieved through the following:

Verif. Method	Verif. By	Plan	Notes/Comments
R	**ENV**	Review completed independent qualified inspector installation packages.	

3.11.3.3 Test for Tightness

Requirement: The Permittees must test for tightness the LAW wet electrostatic precipitators, prior to being covered, enclosed, or placed into use. If the LAW wet electrostatic precipitators are found not to be tight, all

repairs necessary to remedy the leak(s) in the system must be performed prior to the LAW Vitrification System being covered, enclosed, or placed in use [WAC 173-303-640(3)(e), in accordance with WAC 173-303-680(2) and (3)]. [Section III.10.H.1.a.vi, DWP]

Basis Discussion: This requirement is derived from the Washington Administrative Code (WAC) Dangerous Waste Regulations at WAC Chapter 173-303, specifically the Tank System regulations in WAC 173-303-640. These regulatory requirements have been incorporated into the Dangerous Waste Permit, WTP- Operating Unit Group 10, WA 7890008967, as permit condition III.10.H.1.a.vi.

Verification: Construction/installation verification is expected to be achieved through the following:

Verif. Method	Verif. By	Plan	Notes/Comments
R	**ENV**	Review completed installation packages documentation to ensure the tightness testing was completed.	

3.11.3.4 Support and Protection

Requirement: The Permittees must ensure the LAW wet electrostatic precipitators are supported and protected against physical damage and excessive stress due to settlement, vibration, expansion, or contraction [WAC 173-303-640(3)(f), in accordance with WAC 173-303-680(2) and (3)]. [Section III.10.H.1.a.vii, DWP]

Basis Discussion: This requirement is derived from the Washington Administrative Code (WAC) Dangerous Waste Regulations at WAC Chapter 173-303, specifically the Tank System regulations in WAC 173-303-640. These regulatory requirements have been incorporated into the Dangerous Waste Permit, WTP- Operating Unit Group 10, WA 7890008967, as permit condition III.10.H.1.a.vii.

Verification: Construction/installation verification is expected to be achieved through the following:

Verif. Method	Verif. By	Plan	Notes/Comments
R	**ENV**	Review completed installation packages and nonconformance reports and construction deficiency reports to confirm the plant was constructed in accordance with the approved designs, plans and specifications.	

3.11.3.5 Corrosion Protection

Requirement: The Permittees must provide the type and degree of corrosion protection recommended by an independent corrosion expert, based on the information provided in Operating Unit Group 10, Appendices 9.9 and 9.11 of this Permit, as approved pursuant to Permit Conditions III.10.H.5.b.i., III.10.H.5.b.iv., III.10.H.5.b.v., III.10.H.5.c.i., III.10.H.5.c.iv., III.10.H.5.c.v., III.10.H.5.d.i., III.10.H.5.d.iv., and III.10.H.5.d.v., or other corrosion protection if Ecology believes other corrosion protection is necessary to ensure the integrity of the LAW wet electrostatic precipitators during use of the LAW Vitrification System. The installation of a corrosion protection system that is field fabricated must be supervised by an independent corrosion expert to ensure proper installation [WAC 173-303-640(3)(g), in accordance with WAC 173-303-680(2) and (3)]. [Section III.10.H.1.a.viii, DWP]

Basis Discussion: This requirement is derived from the Washington Administrative Code (WAC) Dangerous Waste Regulations at WAC Chapter 173-303, specifically the Tank System regulations in WAC 173-303-640. These regulatory requirements have been incorporated into the Dangerous Waste Permit, WTP- Operating Unit Group 10, WA 7890008967, as permit condition III.10.H.1.a.viii.

This requirement is not applicable to tank systems with components that are not in contact with soil or water.

Verification: Construction/installation verification is expected to be achieved through the following:

Verif. Method	Verif. By	Plan	Notes/Comments
R	**ENV**	Review completed installation packages to verify the requirements corrosion protection are met.	

3.11.3.6 WESP Overflow Prevention Controls

Requirement: The WESPs shall be constructed with the appropriate instrumentation to allow for the control and prevention of overflow from the tank or containment systems. See Table 3-11 for the overflow instruments.

Table 3-11 WESP Overflow Prevention Controls

Monitoring/Control Parameter	Type of Instrument/Control Device	Instrument/Control Device Tag Number
Melter 1 WESP LOP-WESP-00001	Level Transmitters	LT-1059Z LT-1060Z
	Level Indicators	LI-1059Z LI-1060Z
	Level Switches High High	LSHH-1059Z LSHH-1060Z
	Level Alarms High High	LAHH-1059Z LAHH-1060Z
Melter 2 WESP LOP-WESP-00002	Level Transmitters	LT-2059Z LT-2060Z
	Level Indicators	LI-2059Z LI-2060Z
	Level Switches High High	LSHH-2059Z LSHH-2060Z
	Level Alarms High High	LAHH-2059Z LAHH-2060Z

[Section III.10.E.9.e.iv, III.10.H.1.a.xvii, DWP]

Basis Discussion: Table 3-11 is developed from 24590-LAB-PER-J-03-003, *System Logic Description for Low-Activity Waste Facility – LAW Primary Offgas Process (LOP) System*. This requirement is derived from the Washington Administrative Code (WAC) Dangerous Waste Regulations at WAC Chapter 173-303, specifically the Tank System regulations in WAC 173-303-640(5)(b). These regulatory requirements have been incorporated into the Dangerous Waste Permit, WTP- Operating Unit Group 10, WA 7890008967, as permit conditions III.10.E.9.e.iv and III.10.H.1.a.x

Verification: Construction/installation verification is expected to be achieved through the following:

Verif. Method	Verif. By	Plan	Notes/Comments
R	**ENV**	Review the Instrument Data Sheets for the instruments to verify Instruments in Table 3-11.	

3.11.3.7 Monitors and Instrumentation

Requirement: All process monitors/instruments, as specified in Permit Table III.10.H.F (Table 3-12), as approved/modified pursuant to Permit Condition III.10.H.5, will be equipped with operational alarms to warn of deviation, or imminent deviation from the limits specified in Permit Table III.10.H.F. [Sections III.10.H.1.a.xiii, III.10.I.1.vii, Table III.10.H.F, DWP]

Table 3-12 LAW Vitrification System Waste Feed Cutoff Parameters* 1 (RESERVED)

Sub-system Designation	Instrument Tag Number	Parameter Description
RESERVED	RESERVED	RESERVED

Basis Discussion: None.

Verification: Construction/installation verification is expected to be achieved through the following:

Verif. Method	Verif. By	Plan	Notes/Comments
R	**ENV**	Review completed installation packages to verify instrument installation in accordance with the requirement.	

3.11.3.8 Prevention of Escaping Emissions

Requirement: The LAW wet electrostatic precipitators is constructed with features that prevent escape of vapors, fumes, or other emissions into the air. [WAC 173-303-806(4)(i)(i)(B) and WAC 173-303-640(5)(e), in accordance with WAC 173-303-680] [Section III.10.H.1.a.xxix, DWP]

Basis Discussion: This requirement is derived from the Washington Administrative Code (WAC) Dangerous Waste Regulations at WAC Chapter 173-303, specifically the Tank System regulations in WAC 173-303-640. These regulatory requirements have been incorporated into the Dangerous Waste Permit, WTP- Operating Unit Group 10, WA 7890008967, as permit condition III.10.H.1.a.xxix.

Verification: Construction/installation verification is expected to be achieved through the following:

Verif. Method	Verif. By	Plan	Notes/Comments
R	**ENV**	Review as-built P&IDs to verify the system has a vapor collection system and has been constructed according to the design.	

3.11.4 LVP Offgas Mercury Adsorbers

3.11.4.1 Offgas Mercury Adsorber Construction

Requirement: The Permittees will construct the LAW offgas mercury adsorber listed in Permit Tables III.10.H.A and B. (see Table 3-13), as approved/modified pursuant to Permit Condition III.10.H.5, as specified in Permit Condition III.10.H.1 and Operating Unit Group 10, Chapter 4 of this Permit, and Operating Unit Group 10, Appendices 9.1 through 9.15 and 9.17 of this Permit, as approved pursuant to Permit Conditions III.10.H.5.a. through d., and III.10.H.5.f.

Table 3-13 Offgas Mercury Adsorber Construction

Component Number/Location	Description	Material
LVP-ADBR-00001A (Located on LVP-SKID-00001) L-304F	Offgas Mercury Adsorber	Stainless Steel
LVP-ADBR-00001B (Located on LVP-SKID-00001) L-304F	Offgas Mercury Adsorber	Stainless Steel

[Sections III.10.H.1.a.i, III.10.H.1.a.ii, III.10.I.a.i, III.10.I.a.ii, Table III.10.H.A, Chp. 4E, Table 4E-2, DWP]

Basis Discussion: Important containment features are delineated and described in these appendices with some specifics covered by construction requirements identified in this document.

Verification: Construction/installation verification is expected to be achieved through the following:

Verif. Method	Verif. By	Plan	Notes/Comments
R	**ENV**	Review completed independent qualified inspector installation packages.	

3.11.4.2 Handling and Installation Procedures

Requirement: The Permittees must ensure that proper handling procedures are adhered to in order to prevent damage to the LAW offgas mercury adsorber during installation. Prior to covering, enclosing, or placing the new LAW offgas mercury adsorber in use, an independent, qualified, installation inspector or an independent, qualified, registered professional engineer, either of whom is trained and experienced in the proper installation of similar systems or components, must inspect the system for the presence of any of the following items:

- Weld breaks.
- Punctures.
- Scrapes of protective coatings.
- Cracks.
- Corrosion.
- Other structural damage or inadequate construction/installation.

All discrepancies must be remedied before the LAW Vitrification System is covered, enclosed, or placed in use [WAC 173-303-640(3)(c), in accordance with WAC 173-303-680(2) and (3)]. [Section III.10.H.1.a.iv, III.10.I.1.a.iv, DWP]

Basis Discussion: This requirement is derived from the Washington Administrative Code (WAC) Dangerous Waste Regulations at WAC Chapter 173-303, specifically the Tank System regulations in WAC 173-303-640. These regulatory requirements have been incorporated into the Dangerous Waste Permit, WTP- Operating Unit Group 10, WA 7890008967, as permit conditions III.10.H.1.a.iv and III.10.I.1.a.iv.

Verification: Construction/installation verification is expected to be achieved through the following:

Verif. Method	Verif. By	Plan	Notes/Comments
R	**ENV**	Review completed independent qualified inspector installation packages.	

3.11.4.3 Test for Tightness

Requirement: The Permittees must test for tightness the LAW offgas mercury adsorber, prior to being covered, enclosed, or placed into use. If the LAW offgas mercury adsorber are found not to be tight, all repairs necessary to remedy the leak(s) in the system must be performed prior to the LAW Vitrification System being covered, enclosed, or placed in use [WAC 173-303-640(3)(e), in accordance with WAC 173-303-680(2) and (3)]. [Section III.10.H.1.a.vi, DWP]

Basis Discussion: This requirement is derived from the Washington Administrative Code (WAC) Dangerous Waste Regulations at WAC Chapter 173-303, specifically the Tank System regulations in WAC 173-303-640. These regulatory requirements have been incorporated into the Dangerous Waste Permit, WTP- Operating Unit Group 10, WA 7890008967, as permit condition III.10.H.1.a.vi.

Verification: Construction/installation verification is expected to be achieved through the following:

Verif. Method	Verif. By	Plan	Notes/Comments
R	**ENV**	Review completed installation packages documentation to ensure the tightness testing was completed.	

3.11.4.4 Support and Protection

Requirement: The Permittees must ensure the LAW offgas mercury adsorber are supported and protected against physical damage and excessive stress due to settlement, vibration, expansion, or contraction [WAC 173-303-640(3)(f), in accordance with WAC 173-303-680(2) and (3)]. [Section III.10.H.1.a.vii, DWP]

Basis Discussion: This requirement is derived from the Washington Administrative Code (WAC) Dangerous Waste Regulations at WAC Chapter 173-303, specifically the Tank System regulations in WAC 173-303-640. These regulatory requirements have been incorporated into the Dangerous Waste Permit, WTP- Operating Unit Group 10, WA 7890008967, as permit condition III.10.H.1.a.vii.

Verification: Construction/installation verification is expected to be achieved through the following:

Verif. Method	Verif. By	Plan	Notes/Comments
R	**ENV**	Review completed installation packages and nonconformance reports and construction deficiency reports to confirm the plant was constructed in accordance with the approved designs, plans and specifications.	

3.11.4.5 Corrosion Protection

Requirement: The Permittees must provide the type and degree of corrosion protection recommended by an independent corrosion expert, based on the information provided in Operating Unit Group 10, Appendices 9.9 and 9.11 of this Permit, as approved pursuant to Permit Conditions III.10.H.5.b.i., III.10.H.5.b.iv., III.10.H.5.b.v., III.10.H.5.c.i., III.10.H.5.c.iv., III.10.H.5.c.v., III.10.H.5.d.i., III.10.H.5.d.iv., and III.10.H.5.d.v., or other corrosion protection if Ecology believes other corrosion protection is necessary to ensure the integrity of the LAW offgas mercury adsorber during use of the LAW Vitrification System. The installation of a corrosion protection system that is field fabricated must be supervised by an independent corrosion expert to ensure proper installation [WAC 173-303-640(3)(g), in accordance with WAC 173-303-680(2) and (3)]. [Section III.10.H.1.a.viii, DWP]

Basis Discussion: This requirement is derived from the Washington Administrative Code (WAC) Dangerous Waste Regulations at WAC Chapter 173-303, specifically the Tank System regulations in WAC 173-303-640. These regulatory requirements have been incorporated into the Dangerous Waste Permit, WTP- Operating Unit Group 10, WA 7890008967, as permit condition III.10.H.1.a.viii.

This requirement is not applicable to tank systems with components that are not in contact with soil or water.

Verification: Construction/installation verification is expected to be achieved through the following:

Verif. Method	Verif. By	Plan	Notes/Comments
R	**ENV**	Review completed installation packages to verify the requirements corrosion protection are met.	

3.11.4.6 Monitors and Instrumentation

Requirement: All process monitors/instruments, as specified in Permit Table III.10.H.F (Table 3-14), as approved/modified pursuant to Permit Condition III.10.H.5., will be equipped with operational alarms to warn of deviation, or imminent deviation from the limits specified in Permit Table III.10.H.F. [Sections III.10.H.1.a.xiii, III.10.I.1.vii, Table III.10.H.F, DWP]

Table 3-14 LAW Vitrification System Waste Feed Cutoff Parameters* 1 (RESERVED)

Sub-system Designation	Instrument Tag Number	Parameter Description
RESERVED	RESERVED	RESERVED

Basis Discussion: None.

Verification: Construction/installation verification is expected to be achieved through the following:

Verif. Method	Verif. By	Plan	Notes/Comments
R	**ENV**	Review completed installation packages to verify instrument installation in accordance with the requirement.	

3.11.4.7 Prevention of Escaping Emissions

Requirement: The LAW offgas mercury adsorber is constructed with features that prevent escape of vapors, fumes, or other emissions into the air. [WAC 173-303-806(4)(i)(i)(B) and WAC 173-303-640(5)(e), in accordance with WAC 173-303-680] [Section III.10.H.1.a.xxix, DWP]

Basis Discussion: This requirement is derived from the Washington Administrative Code (WAC) Dangerous Waste Regulations at WAC Chapter 173-303, specifically the Tank System regulations in WAC 173-303-640. These regulatory requirements have been incorporated into the Dangerous Waste Permit, WTP- Operating Unit Group 10, WA 7890008967, as permit condition III.10.H.1.a.xxix.

Verification: Construction/installation verification is expected to be achieved through the following:

Verif. Method	Verif. By	Plan	Notes/Comments
R	**ENV**	Review as-built P&IDs to verify the system has a vapor collection system and has been constructed according to the design.	

3.11.5 LVP Exhausters

3.11.5.1 Exhausters Construction

Requirement: The Permittees will construct the LVP exhausters listed in Permit Tables III.10.H.A and B. (see Table 3-15), as approved/modified pursuant to Permit Condition III.10.H.5, as specified in Permit Condition III.10.H.1 and Operating Unit Group 10, Chapter 4 of this Permit, and Operating Unit Group 10, Appendices 9.1 through 9.15 and 9.17 of this Permit, as approved pursuant to Permit Conditions III.10.H.5.a. through d., and III.10.H.5.f.

Table 3-15 LVP Exhausters Construction

Component Number/Location	Description	Material
LVP-EXHR-00001A L-0304C	Melter Offgas Exhauster	Stainless Steel
LVP-EXHR-00001B L-0304D	Melter Offgas Exhauster	Stainless Steel
LVP-EXHR-00001C L-0304E	Melter Offgas Exhauster	Stainless Steel

[Sections III.10.H.1.a.i, III.10.H.1.a.ii, III.10.I.a.i, III.10.I.a.ii, Table III.10.H.A, Chp. 4E, Table 4E-2, DWP]

Basis Discussion: Important containment features are delineated and described in these appendices with some specifics covered by construction requirements identified in this document.

Verification: Construction/installation verification is expected to be achieved through the following:

Verif. Method	Verif. By	Plan	Notes/Comments
R	**ENV**	Review completed independent qualified inspector installation packages.	

3.11.5.2 Handling and Installation Procedures

Requirement: The Permittees must ensure that proper handling procedures are adhered to in order to prevent damage to the LVP exhausters during installation. Prior to covering, enclosing, or placing the new LVP exhausters in use, an independent, qualified, installation inspector or an independent, qualified, registered professional engineer, either of whom is trained and experienced in the proper installation of similar systems or components, must inspect the system for the presence of any of the following items:

- Weld breaks.
- Punctures.
- Scrapes of protective coatings.
- Cracks.
- Corrosion.
- Other structural damage or inadequate construction/installation.

All discrepancies must be remedied before the LAW Vitrification System is covered, enclosed, or placed in use [WAC 173-303-640(3)(c), in accordance with WAC 173-303-680(2) and (3)]. [Section III.10.H.1.a.iv, III.10.I.1.a.iv, DWP]

Basis Discussion: This requirement is derived from the Washington Administrative Code (WAC) Dangerous Waste Regulations at WAC Chapter 173-303, specifically the Tank System regulations in WAC 173-303-640.

These regulatory requirements have been incorporated into the Dangerous Waste Permit, WTP- Operating Unit Group 10, WA 7890008967, as permit conditions III.10.H.1.a.iv and III.10.I.1.a.iv.

Verification: Construction/installation verification is expected to be achieved through the following:

Verif. Method	Verif. By	Plan	Notes/Comments
R	**ENV**	Review completed independent qualified inspector installation packages.	

3.11.5.3 Test for Tightness

Requirement: The Permittees must test for tightness the LVP exhausters, prior to being covered, enclosed, or placed into use. If the LVP exhausters are found not to be tight, all repairs necessary to remedy the leak(s) in the system must be performed prior to the LAW Vitrification System being covered, enclosed, or placed in use [WAC 173-303-640(3)(e), in accordance with WAC 173-303-680(2) and (3)]. [Section III.10.H.1.a.vi, DWP]

Basis Discussion: This requirement is derived from the Washington Administrative Code (WAC) Dangerous Waste Regulations at WAC Chapter 173-303, specifically the Tank System regulations in WAC 173-303-640. These regulatory requirements have been incorporated into the Dangerous Waste Permit, WTP- Operating Unit Group 10, WA 7890008967, as permit condition III.10.H.1.a.vi.

Verification: Construction/installation verification is expected to be achieved through the following:

Verif. Method	Verif. By	Plan	Notes/Comments
R	**ENV**	Review completed installation packages documentation to ensure the tightness testing was completed.	

3.11.5.4 Support and Protection

Requirement: The Permittees must ensure the LVP exhausters are supported and protected against physical damage and excessive stress due to settlement, vibration, expansion, or contraction [WAC 173-303-640(3)(f), in accordance with WAC 173-303-680(2) and (3)]. [Section III.10.H.1.a.vii, DWP]

Basis Discussion: This requirement is derived from the Washington Administrative Code (WAC) Dangerous Waste Regulations at WAC Chapter 173-303, specifically the Tank System regulations in WAC 173-303-640. These regulatory requirements have been incorporated into the Dangerous Waste Permit, WTP- Operating Unit Group 10, WA 7890008967, as permit condition III.10.H.1.a.vii.

Verification: Construction/installation verification is expected to be achieved through the following:

Verif. Method	Verif. By	Plan	Notes/Comments
R	**ENV**	Review completed installation packages and nonconformance reports and construction deficiency reports to confirm the plant was constructed in accordance with the approved designs, plans and specifications.	

3.11.5.5 Corrosion Protection

Requirement: The Permittees must provide the type and degree of corrosion protection recommended by an independent corrosion expert, based on the information provided in Operating Unit Group 10, Appendices 9.9 and 9.11 of this Permit, as approved pursuant to Permit Conditions III.10.H.5.b.i., III.10.H.5.b.iv., III.10.H.5.b.v., III.10.H.5.c.i., III.10.H.5.c.iv., III.10.H.5.c.v., III.10.H.5.d.i., III.10.H.5.d.iv., and III.10.H.5.d.v., or other corrosion protection if Ecology believes other corrosion protection is necessary to ensure the integrity of the LVP exhausters during use of the LAW Vitrification System. The installation of a corrosion protection system that is field fabricated must be supervised by an independent corrosion expert to ensure proper installation [WAC 173-303-640(3)(g), in accordance with WAC 173-303-680(2) and (3)]. [Section III.10.H.1.a.viii, DWP]

Basis Discussion: This requirement is derived from the Washington Administrative Code (WAC) Dangerous Waste Regulations at WAC Chapter 173-303, specifically the Tank System regulations in WAC 173-303-640. These regulatory requirements have been incorporated into the Dangerous Waste Permit, WTP- Operating Unit Group 10, WA 7890008967, as permit condition III.10.H.1.a.viii.

This requirement is not applicable to tank systems with components that are not in contact with soil or water.

Verification: Construction/installation verification is expected to be achieved through the following:

Verif. Method	Verif. By	Plan	Notes/Comments
R	**ENV**	Review completed installation packages to verify the requirements corrosion protection are met.	

3.11.5.6 Monitors and Instrumentation

Requirement: All process monitors/instruments, as specified in Permit Table III.10.H.F (Table 3-16), as approved/modified pursuant to Permit Condition III.10.H.5., will be equipped with operational alarms to warn of deviation, or imminent deviation from the limits specified in Permit Table III.10.H.F. [Sections III.10.H.1.a.xiii, III.10.I.1.vii, Table III.10.H.F, DWP]

Table 3-16 LAW Vitrification System Waste Feed Cutoff Parameters* 1 (RESERVED)

Sub-system Designation	Instrument Tag Number	Parameter Description
RESERVED	RESERVED	RESERVED

Basis Discussion: None.

Verification: Construction/installation verification is expected to be achieved through the following:

Verif. Method	Verif. By	Plan	Notes/Comments
R	**ENV**	Review completed installation packages to verify instrument installation in accordance with the requirement.	

3.11.5.7 Prevention of Escaping Emissions

Requirement: The LVP exhausters is constructed with features that prevent escape of vapors, fumes, or other emissions into the air. [WAC 173-303-806(4)(i)(i)(B) and WAC 173-303-640(5)(e), in accordance with WAC 173-303-680] [Section III.10.H.1.a.xxix, DWP]

Basis Discussion: This requirement is derived from the Washington Administrative Code (WAC) Dangerous Waste Regulations at WAC Chapter 173-303, specifically the Tank System regulations in WAC 173-303-640. These regulatory requirements have been incorporated into the Dangerous Waste Permit, WTP- Operating Unit Group 10, WA 7890008967, as permit condition III.10.H.1.a.xxix.

Verification: Construction/installation verification is expected to be achieved through the following:

Verif. Method	Verif. By	Plan	Notes/Comments
R	**ENV**	Review as-built P&IDs to verify the system has a vapor collection system and has been constructed according to the design.	

3.11.6 LVP HEPA Filters

3.11.6.1 HEPA Filters Construction

Requirement: The Permittees will construct the LVP HEPA filters listed in Permit Tables III.10.H.A. (see Table 3-17), as approved/modified pursuant to Permit Condition III.10.H.5, as specified in Permit Condition III.10.H.1 and Operating Unit Group 10, Chapter 4 of this Permit, and Operating Unit Group 10, Appendices 9.1 through 9.15 and 9.17 of this Permit, as approved pursuant to Permit Conditions III.10.H.5.a. through d., and III.10.H.5.f.

Table 3-17 LVP HEPA Filters Construction

Component Number/Location	Description	Material
LVP-HEPA-00001A L-0304H	Melter Offgas HEPA Filter	Synthetic Fibrous Materials/Stainless Steel
LVP-HEPA-00001B L-0304H	Melter Offgas HEPA Filter	Synthetic Fibrous Materials/Stainless Steel
LVP-HEPA-00002A L-0304H	Melter Offgas HEPA Filter	Synthetic Fibrous Materials/Stainless Steel
LVP-HEPA-00002B L-0304H	Melter Offgas HEPA Filter	Synthetic Fibrous Materials/Stainless Steel
LVP-HEPA-00003A L-0304H	Melter Offgas HEPA Filter	Synthetic Fibrous Materials/Stainless Steel

[Sections III.10.H.1.a.i, III.10.H.1.a.ii, III.10.I.a.i, III.10.I.a.ii, Table III.10.H.A, Chp. 4E, Table 4E-2, DWP]

Basis Discussion: Important containment features are delineated and described in these appendices with some specifics covered by construction requirements identified in this document.

Verification: Construction/installation verification is expected to be achieved through the following:

Verif. Method	Verif. By	Plan	Notes/Comments
R	**ENV**	Review completed independent qualified inspector installation packages.	

3.11.6.2 Handling and Installation Procedures

Requirement: The Permittees must ensure that proper handling procedures are adhered to in order to prevent damage to the LVP HEPA filters during installation. Prior to covering, enclosing, or placing the new LVP HEPA filters in use, an independent, qualified, installation inspector or an independent, qualified, registered professional engineer, either of whom is trained and experienced in the proper installation of similar systems or components, must inspect the system for the presence of any of the following items:

- Weld breaks.
- Punctures.
- Scrapes of protective coatings.
- Cracks.
- Corrosion.
- Other structural damage or inadequate construction/installation.

All discrepancies must be remedied before the LAW Vitrification System is covered, enclosed, or placed in use [WAC 173-303-640(3)(c), in accordance with WAC 173-303-680(2) and (3)]. [Section III.10.H.1.a.iv, III.10.I.1.a.iv, DWP]

Basis Discussion: This requirement is derived from the Washington Administrative Code (WAC) Dangerous Waste Regulations at WAC Chapter 173-303, specifically the Tank System regulations in WAC 173-303-640. These regulatory requirements have been incorporated into the Dangerous Waste Permit, WTP- Operating Unit Group 10, WA 7890008967, as permit conditions III.10.H.1.a.iv and III.10.I.1.a.iv.

Verification: Construction/installation verification is expected to be achieved through the following:

Verif. Method	Verif. By	Plan	Notes/Comments
R	**ENV**	Review completed independent qualified inspector installation packages.	

3.11.6.3 Test for Tightness

Requirement: The Permittees must test for tightness the LVP HEPA filters, prior to being covered, enclosed, or placed into use. If the LVP HEPA filters are found not to be tight, all repairs necessary to remedy the leak(s) in the system must be performed prior to the LAW Vitrification System being covered, enclosed, or placed in use [WAC 173-303-640(3)(e), in accordance with WAC 173-303-680(2) and (3)]. [Section III.10.H.1.a.vi, DWP]

Basis Discussion: This requirement is derived from the Washington Administrative Code (WAC) Dangerous Waste Regulations at WAC Chapter 173-303, specifically the Tank System regulations in WAC 173-303-640. These regulatory requirements have been incorporated into the Dangerous Waste Permit, WTP- Operating Unit Group 10, WA 7890008967, as permit condition III.10.H.1.a.vi.

Verification: Construction/installation verification is expected to be achieved through the following:

Verif. Method	Verif. By	Plan	Notes/Comments
R	**ENV**	Review completed installation packages documentation to ensure the tightness testing was completed.	

3.11.6.4 Support and Protection

Requirement: The Permittees must ensure the LVP HEPA filters are supported and protected against physical damage and excessive stress due to settlement, vibration, expansion, or contraction [WAC 173-303-640(3)(f), in accordance with WAC 173-303-680(2) and (3)]. [Section III.10.H.1.a.vii, DWP]

Basis Discussion: This requirement is derived from the Washington Administrative Code (WAC) Dangerous Waste Regulations at WAC Chapter 173-303, specifically the Tank System regulations in WAC 173-303-640. These regulatory requirements have been incorporated into the Dangerous Waste Permit, WTP- Operating Unit Group 10, WA 7890008967, as permit condition III.10.H.1.a.vii.

Verification: Construction/installation verification is expected to be achieved through the following:

Verif. Method	Verif. By	Plan	Notes/Comments
R	**ENV**	Review completed installation packages and nonconformance reports and construction deficiency reports to confirm the plant was constructed in accordance with the approved designs, plans and specifications.	

3.11.6.5 Corrosion Protection

Requirement: The Permittees must provide the type and degree of corrosion protection recommended by an independent corrosion expert, based on the information provided in Operating Unit Group 10, Appendices 9.9 and 9.11 of this Permit, as approved pursuant to Permit Conditions III.10.H.5.b.i., III.10.H.5.b.iv., III.10.H.5.b.v., III.10.H.5.c.i., III.10.H.5.c.iv., III.10.H.5.c.v., III.10.H.5.d.i., III.10.H.5.d.iv., and III.10.H.5.d.v., or other corrosion protection if Ecology believes other corrosion protection is necessary to ensure the integrity of the LVP HEPA filters during use of the LAW Vitrification System. The installation of a corrosion protection system that is field fabricated must be supervised by an independent corrosion expert to ensure proper installation [WAC 173-303-640(3)(g), in accordance with WAC 173-303-680(2) and (3)]. [Section III.10.H.1.a.viii, DWP]

Basis Discussion: This requirement is derived from the Washington Administrative Code (WAC) Dangerous Waste Regulations at WAC Chapter 173-303, specifically the Tank System regulations in WAC 173-303-640. These regulatory requirements have been incorporated into the Dangerous Waste Permit, WTP- Operating Unit Group 10, WA 7890008967, as permit condition III.10.H.1.a.viii.

This requirement is not applicable to tank systems with components that are not in contact with soil or water.

Verification: Construction/installation verification is expected to be achieved through the following:

Verif. Method	Verif. By	Plan	Notes/Comments
R	**ENV**	Review completed installation packages to verify the requirements corrosion protection are met.	

3.11.6.6 Monitors and Instrumentation

Requirement: All process monitors/instruments, as specified in Permit Table III.10.H.F (Table 3-18), as approved/modified pursuant to Permit Condition III.10.H.5., will be equipped with operational alarms to warn of deviation, or imminent deviation from the limits specified in Permit Table III.10.H.F. [Sections III.10.H.1.a.xiii, III.10.I.1.vii, Table III.10.H.F, DWP]

Table 3-18 LAW Vitrification System Waste Feed Cutoff Parameters* 1 (RESERVED)

Sub-system Designation	Instrument Tag Number	Parameter Description
RESERVED	RESERVED	RESERVED

Basis Discussion: None.

Verification: Construction/installation verification is expected to be achieved through the following:

Verif. Method	Verif. By	Plan	Notes/Comments
R	**ENV**	Review completed installation packages to verify instrument installation in accordance with the requirement.	

3.11.6.7 Prevention of Escaping Emissions

Requirement: The LVP HEPA filters is constructed with features that prevent escape of vapors, fumes, or other emissions into the air. [WAC 173-303-806(4)(i)(i)(B) and WAC 173-303-640(5)(e), in accordance with WAC 173-303-680][Section III.10.H.1.a.xxix, DWP]

Basis Discussion: This requirement is derived from the Washington Administrative Code (WAC) Dangerous Waste Regulations at WAC Chapter 173-303, specifically the Tank System regulations in WAC 173-303-640. These regulatory requirements have been incorporated into the Dangerous Waste Permit, WTP- Operating Unit Group 10, WA 7890008967, as permit condition III.10.H.1.a.xxix.

Verification: Construction/installation verification is expected to be achieved through the following:

Verif. Method	Verif. By	Plan	Notes/Comments
R	**ENV**	Review as-built P&IDs to verify the system has a vapor collection system and has been constructed according to the design.	

3.11.7 LVP HEPA Preheaters

3.11.7.1 Preheaters Construction

Requirement: The Permittees will construct the LVP HEPA preaheaters listed in Permit Tables III.10.H.A and B. (see Table 3-19), as approved/modified pursuant to Permit Condition III.10.H.5, as specified in Permit Condition III.10.H.1 and Operating Unit Group 10, Chapter 4 of this Permit, and Operating Unit Group 10, Appendices 9.1 through 9.15 and 9.17 of this Permit, as approved pursuant to Permit Conditions III.10.H.5.a. through d., and III.10.H.5.f.

Table 3-19 LVP HEPA Preheaters Construction

Component Number/Location	Description	Material
LVP-HTR-00001A L-0304H	Melter Offgas HEPA Preheater	Stainless Steel/Incoloy 800

Component Number/Location	Description	Material
LVP-HTR-00001B L-0304H	Melter Offgas HEPA Preheater	Stainless Steel/Incoloy 800

[Sections III.10.H.1.a.i, III.10.H.1.a.ii, III.10.I.a.i, III.10.I.a.ii, Table III.10.H.A, Chp. 4E, Table 4E-2, DWP]

Basis Discussion: Important containment features are delineated and described in these appendices with some specifics covered by construction requirements identified in this document.

Verification: Construction/installation verification is expected to be achieved through the following:

Verif. Method	Verif. By	Plan	Notes/Comments
R	**ENV**	Review completed independent qualified inspector installation packages.	

3.11.7.2 Handling and Installation Procedures

Requirement: The Permittees must ensure that proper handling procedures are adhered to in order to prevent damage to the LVP heaters during installation. Prior to covering, enclosing, or placing the new LVP HEPA Preheaters in use, an independent, qualified, installation inspector or an independent, qualified, registered professional engineer, either of whom is trained and experienced in the proper installation of similar systems or components, must inspect the system for the presence of any of the following items:

- Weld breaks.
- Punctures.
- Scrapes of protective coatings.
- Cracks.
- Corrosion.
- Other structural damage or inadequate construction/installation.

All discrepancies must be remedied before the LAW Vitrification System is covered, enclosed, or placed in use [WAC 173-303-640(3)(c), in accordance with WAC 173-303-680(2) and (3)]. [Section III.10.H.1.a.iv, III.10.I.1.a.iv, DWP]

Basis Discussion: This requirement is derived from the Washington Administrative Code (WAC) Dangerous Waste Regulations at WAC Chapter 173-303, specifically the Tank System regulations in WAC 173-303-640. These regulatory requirements have been incorporated into the Dangerous Waste Permit, WTP- Operating Unit Group 10, WA 7890008967, as permit conditions III.10.H.1.a.iv and III.10.I.1.a.iv.

Verification: Construction/installation verification is expected to be achieved through the following:

Verif. Method	Verif. By	Plan	Notes/Comments
R	**ENV**	Review completed independent qualified inspector installation packages.	

3.11.7.3 Test for Tightness

Requirement: The Permittees must test for tightness the LVP HEPA Preheaters, prior to being covered, enclosed, or placed into use. If the LVP heaters are found not to be tight, all repairs necessary to remedy the leak(s) in the system must be performed prior to the LAW Vitrification System being covered, enclosed, or placed

in use [WAC 173-303-640(3)(e), in accordance with WAC 173-303-680(2) and (3)]. [Section III.10.H.1.a.vi, DWP]

Basis Discussion: This requirement is derived from the Washington Administrative Code (WAC) Dangerous Waste Regulations at WAC Chapter 173-303, specifically the Tank System regulations in WAC 173-303-640. These regulatory requirements have been incorporated into the Dangerous Waste Permit, WTP- Operating Unit Group 10, WA 7890008967, as permit condition III.10.H.1.a.vi.

Verification: Construction/installation verification is expected to be achieved through the following:

Verif. Method	Verif. By	Plan	Notes/Comments
R	**ENV**	Review completed installation packages documentation to ensure the tightness testing was completed.	

3.11.7.4 Support and Protection

Requirement: The Permittees must ensure the LVP HEPA Preheaters are supported and protected against physical damage and excessive stress due to settlement, vibration, expansion, or contraction [WAC 173-303-640(3)(f), in accordance with WAC 173-303-680(2) and (3)]. [Section III.10.H.1.a.vii, DWP]

Basis Discussion: This requirement is derived from the Washington Administrative Code (WAC) Dangerous Waste Regulations at WAC Chapter 173-303, specifically the Tank System regulations in WAC 173-303-640. These regulatory requirements have been incorporated into the Dangerous Waste Permit, WTP- Operating Unit Group 10, WA 7890008967, as permit condition III.10.H.1.a.vii.

Verification: Construction/installation verification is expected to be achieved through the following:

Verif. Method	Verif. By	Plan	Notes/Comments
R	**ENV**	Review completed installation packages and nonconformance reports and construction deficiency reports to confirm the plant was constructed in accordance with the approved designs, plans and specifications.	

3.11.7.5 Corrosion Protection

Requirement: The Permittees must provide the type and degree of corrosion protection recommended by an independent corrosion expert, based on the information provided in Operating Unit Group 10, Appendices 9.9 and 9.11 of this Permit, as approved pursuant to Permit Conditions III.10.H.5.b.i., III.10.H.5.b.iv., III.10.H.5.b.v., III.10.H.5.c.i., III.10.H.5.c.iv., III.10.H.5.c.v., III.10.H.5.d.i., III.10.H.5.d.iv., and III.10.H.5.d.v., or other corrosion protection if Ecology believes other corrosion protection is necessary to ensure the integrity of the LVP HEPA Preheaters during use of the LAW Vitrification System. The installation of a corrosion protection system that is field fabricated must be supervised by an independent corrosion expert to ensure proper installation [WAC 173-303-640(3)(g), in accordance with WAC 173-303-680(2) and (3)]. [Section III.10.H.1.a.viii, DWP]

Basis Discussion: This requirement is derived from the Washington Administrative Code (WAC) Dangerous Waste Regulations at WAC Chapter 173-303, specifically the Tank System regulations in WAC 173-303-640. These regulatory requirements have been incorporated into the Dangerous Waste Permit, WTP- Operating Unit Group 10, WA 7890008967, as permit condition III.10.H.1.a.viii.

This requirement is not applicable to tank systems with components that are not in contact with soil or water.

Verification: Construction/installation verification is expected to be achieved through the following:

Verif. Method	Verif. By	Plan	Notes/Comments
R	**ENV**	Review completed installation packages to verify the requirements corrosion protection are met.	

3.11.7.6 Monitors and Instrumentation

Requirement: All process monitors/instruments, as specified in Permit Table III.10.H.F (Table 3-20), as approved/modified pursuant to Permit Condition III.10.H.5., will be equipped with operational alarms to warn of deviation, or imminent deviation from the limits specified in Permit Table III.10.H.F. [Sections III.10.H.1.a.xiii, III.10.I.1.vii, Table III.10.H.F, DWP]

Table 3-20 LAW Vitrification System Waste Feed Cutoff Parameters* 1 (RESERVED)

Sub-system Designation	Instrument Tag Number	Parameter Description
RESERVED	RESERVED	RESERVED

Basis Discussion: None.

Verification: Construction/installation verification is expected to be achieved through the following:

Verif. Method	Verif. By	Plan	Notes/Comments
R	**ENV**	Review completed installation packages to verify instrument installation in accordance with the requirement.	

3.11.7.7 Prevention of Escaping Emissions

Requirement: The LVP HEPA preheaters is constructed with features that prevent escape of vapors, fumes, or other emissions into the air. [WAC 173-303-806(4)(i)(i)(B) and WAC 173-303-640(5)(e), in accordance with WAC 173-303-680][Section III.10.H.1.a.xxix, DWP]

Basis Discussion: This requirement is derived from the Washington Administrative Code (WAC) Dangerous Waste Regulations at WAC Chapter 173-303, specifically the Tank System regulations in WAC 173-303-640. These regulatory requirements have been incorporated into the Dangerous Waste Permit, WTP- Operating Unit Group 10, WA 7890008967, as permit condition III.10.H.1.a.xxix.

Verification: Construction/installation verification is expected to be achieved through the following:

Verif. Method	Verif. By	Plan	Notes/Comments
R	**ENV**	Review as-built P&IDs to verify the system has a vapor collection system and has been constructed according to the design.	

3.11.8 LVP Scrubber (Caustic-Offgas Submerged Bed)

3.11.8.1 Offgas Caustic Scrubber Construction

Requirement: The Permittees will construct the LVP offgas caustic scrubber listed in Permit Tables III.10.H.A and B. (see Table 3-21), as approved/modified pursuant to Permit Condition III.10.H.5, as specified in Permit Condition III.10.H.1 and Operating Unit Group 10, Chapter 4 of this Permit, and Operating Unit Group 10, Appendices 9.1 through 9.15 and 9.17 of this Permit, as approved pursuant to Permit Conditions III.10.H.5.a. through d., and III.10.H.5.f.

Table 3-21 LVP Offgas Caustic Scrubber Construction

Component Number/Location	Description	Material	Total Volume (US Gallons)
LVP-SCB-00001 L-0304F	Melter Offgas Caustic Scrubber	Hastelloy/Metal Intalox Packing/Stainless Steel	TBD

[Sections III.10.H.1.a.i, III.10.H.1.a.ii, III.10.I.a.i, III.10.I.a.ii, Table III.10.H.A, Chp. 4E, Table 4E-2, DWP]

Basis Discussion: Important containment features are delineated and described in these appendices with some specifics covered by construction requirements identified in this document.

Verification: Construction/installation verification is expected to be achieved through the following:

Verif. Method	Verif. By	Plan	Notes/Comments
R	**ENV**	Perform a permitted facility document review of DMWU system to verify construction and installation is in compliance with the permitted design.	

3.11.8.2 Handling and Installation Procedures

Requirement: The Permittees must ensure that proper handling procedures are adhered to in order to prevent damage to the LVP offgas caustic scrubber during installation. Prior to covering, enclosing, or placing the new LVP scrubber in use, an independent, qualified, installation inspector or an independent, qualified, registered professional engineer, either of whom is trained and experienced in the proper installation of similar systems or components, must inspect the system for the presence of any of the following items:

- Weld breaks.
- Punctures.
- Scrapes of protective coatings.
- Cracks.
- Corrosion.
- Other structural damage or inadequate construction/installation.

All discrepancies must be remedied before the LAW Vitrification System is covered, enclosed, or placed in use [WAC 173-303-640(3)(c), in accordance with WAC 173-303-680(2) and (3)]. [Section III.10.H.1.a.iv, III.10.I.1.a.iv, DWP]

Basis Discussion: This requirement is derived from the Washington Administrative Code (WAC) Dangerous Waste Regulations at WAC Chapter 173-303, specifically the Tank System regulations in WAC 173-303-640.

These regulatory requirements have been incorporated into the Dangerous Waste Permit, WTP- Operating Unit Group 10, WA 7890008967, as permit conditions III.10.H.1.a.iv and III.10.I.1.a.iv.

Verification: Construction/installation verification is expected to be achieved through the following:

Verif. Method	Verif. By	Plan	Notes/Comments
R	**ENV**	Review completed independent qualified inspector installation packages.	

3.11.8.3 Test for Tightness

Requirement: The Permittees must test for tightness the LVP offgas caustic scrubber, prior to being covered, enclosed, or placed into use. If the LVP scrubber are found not to be tight, all repairs necessary to remedy the leak(s) in the system must be performed prior to the LAW Vitrification System being covered, enclosed, or placed in use [WAC 173-303-640(3)(e), in accordance with WAC 173-303-680(2) and (3)]. [Section III.10.H.1.a.vi, DWP]

Basis Discussion: This requirement is derived from the Washington Administrative Code (WAC) Dangerous Waste Regulations at WAC Chapter 173-303, specifically the Tank System regulations in WAC 173-303-640. These regulatory requirements have been incorporated into the Dangerous Waste Permit, WTP- Operating Unit Group 10, WA 7890008967, as permit condition III.10.H.1.a.vi.

Verification: Construction/installation verification is expected to be achieved through the following:

Verif. Method	Verif. By	Plan	Notes/Comments
R	**ENV**	Review completed installation packages documentation to ensure the tightness testing was completed.	

3.11.8.4 Support and Protection

Requirement: The Permittees must ensure the LVP offgas caustic scrubber are supported and protected against physical damage and excessive stress due to settlement, vibration, expansion, or contraction [WAC 173-303-640(3)(f), in accordance with WAC 173-303-680(2) and (3)]. [Section III.10.H.1.a.vii, DWP]

Basis Discussion: This requirement is derived from the Washington Administrative Code (WAC) Dangerous Waste Regulations at WAC Chapter 173-303, specifically the Tank System regulations in WAC 173-303-640. These regulatory requirements have been incorporated into the Dangerous Waste Permit, WTP- Operating Unit Group 10, WA 7890008967, as permit condition III.10.H.1.a.vii.

Verification: Construction/installation verification is expected to be achieved through the following:

Verif. Method	Verif. By	Plan	Notes/Comments
R	**ENV**	Review completed installation packages and nonconformance reports and construction deficiency reports to confirm the plant was constructed in accordance with the approved designs, plans and specifications.	

3.11.8.5 LVP Offgas Caustic Scrubber Overflow Prevention Control

Requirement: The LVP offgas caustic scrubber shall be constructed with the appropriate instrumentation to allow for the control and prevention of overflow from the tank or containment systems. See Table 3-22 for the overflow instruments.

Table 3-22 LVP Offgas Caustic Scrubber Overflow Prevention Controls

Monitoring/Control Parameter	Type of Instrument/Control Device	Instrument/Control Device Tag Number
LVP Offgas Caustic Scrubber LVP-SCB-00001	Level Transmitters	LT-0090
	Level Indicators	LI-0090
	Level Switch High High	LSHH-0090
	Level Alarm High High	LAHH-0090

[Section III.10.E.9.e.iv, DWP]

Basis Discussion: Table 3-22 is developed from 24590-LAB-PER-J-04-0002, *System Logic Description for Low-Activity Waste Facility – LAW Secondary Offgas Process (LVP) System*. This requirement is derived from the Washington Administrative Code (WAC) Dangerous Waste Regulations at WAC Chapter 173-303, specifically the Tank System regulations in WAC 173-303-640(5)(b). These regulatory requirements have been incorporated into the Dangerous Waste Permit, WTP- Operating Unit Group 10, WA 7890008967, as permit condition III.10.E.9.e

Verification: Construction/installation verification is expected to be achieved through the following:

Verif. Method	Verif. By	Plan	Notes/Comments
R	**ENV**	Review the Instrument Data Sheets for the instruments to verify Instruments in Table 3-22.	

3.11.8.6 Corrosion Protection

Requirement: The Permittees must provide the type and degree of corrosion protection recommended by an independent corrosion expert, based on the information provided in Operating Unit Group 10, Appendices 9.9 and 9.11 of this Permit, as approved pursuant to Permit Conditions III.10.H.5.b.i., III.10.H.5.b.iv., III.10.H.5.b.v., III.10.H.5.c.i., III.10.H.5.c.iv., III.10.H.5.c.v., III.10.H.5.d.i., III.10.H.5.d.iv., and III.10.H.5.d.v., or other corrosion protection if Ecology believes other corrosion protection is necessary to ensure the integrity of the LVP offgas caustic scrubber during use of the LAW Vitrification System. The installation of a corrosion protection system that is field fabricated must be supervised by an independent corrosion expert to ensure proper installation [WAC 173-303-640(3)(g), in accordance with WAC 173-303-680(2) and (3)]. [Section III.10.H.1.a.viii, DWP]

Basis Discussion: This requirement is derived from the Washington Administrative Code (WAC) Dangerous Waste Regulations at WAC Chapter 173-303, specifically the Tank System regulations in WAC 173-303-640. These regulatory requirements have been incorporated into the Dangerous Waste Permit, WTP- Operating Unit Group 10, WA 7890008967, as permit condition III.10.H.1.a.viii.

This requirement is not applicable to tank systems with components that are not in contact with soil or water.

Verification: Construction/installation verification is expected to be achieved through the following:

Verif. Method	Verif. By	Plan	Notes/Comments
R	**ENV**	Review completed installation packages to verify the requirements corrosion protection are met.	

3.11.8.7 Monitors and Instrumentation

Requirement: All process monitors/instruments, as specified in Permit Table III.10.H.F (Table 3-23), as approved/modified pursuant to Permit Condition III.10.H.5., will be equipped with operational alarms to warn of deviation, or imminent deviation from the limits specified in Permit Table III.10.H.F. [Sections III.10.H.1.a.xiii, III.10.I.1.vii, Table III.10.H.F, DWP]

Table 3-23 LAW Vitrification System Waste Feed Cutoff Parameters* 1 (RESERVED)

Sub-system Designation	Instrument Tag Number	Parameter Description
RESERVED	RESERVED	RESERVED

Basis Discussion: None.

Verification: Construction/installation verification is expected to be achieved through the following:

Verif. Method	Verif. By	Plan	Notes/Comments
R	**ENV**	Review completed installation packages to verify instrument installation in accordance with the requirement.	

3.11.8.8 Prevention of Escaping Emissions

Requirement: The LVP offgas Caustic scrubber is constructed with features that prevent escape of vapors, fumes, or other emissions into the air. [WAC 173-303-806(4)(i)(i)(B) and WAC 173-303-640(5)(e), in accordance with WAC 173-303-680]. [Section III.10.H.1.a.xxix, DWP]

Basis Discussion: This requirement is derived from the Washington Administrative Code (WAC) Dangerous Waste Regulations at WAC Chapter 173-303, specifically the Tank System regulations in WAC 173-303-640. These regulatory requirements have been incorporated into the Dangerous Waste Permit, WTP- Operating Unit Group 10, WA 7890008967, as permit condition III.10.H.1.a.xxix.

Verification: Construction/installation verification is expected to be achieved through the following:

Verif. Method	Verif. By	Plan	Notes/Comments
R	**ENV**	Review as-built P&IDs to verify the system has a vapor collection system and has been constructed according to the design.	

3.11.9 LVP Selective Catalytic Oxididation Unit

3.11.9.1 Selective Catalytic Oxidiation Construction

Requirement: The Permittees will construct the LVP selective catalytic oxidizer listed in Permit Tables III.10.H.A and B. (see Table 3-24), as approved/modified pursuant to Permit Condition III.10.H.5, as specified in Permit Condition III.10.H.1 and Operating Unit Group 10, Chapter 4 of this Permit, and Operating Unit Group 10, Appendices 9.1 through 9.15 and 9.17 of this Permit, as approved pursuant to Permit Conditions III.10.H.5.a. through d., and III.10.H.5.f.

Table 3-24 Selective Catalytic Oxidizer Construction

Component Number/Location	Description	Material
LVP-SCO-00001 (located on LVP-SKID-00002) L-0304F	Thermal Catalytic Oxidizer	Stainless Steel

[Sections III.10.H.1.a.i, III.10.H.1.a.ii, III.10.I.a.i, III.10.I.a.ii, Table III.10.H.A, Chp. 4E, Table 4E-2, DWP]

Basis Discussion: Important containment features are delineated and described in these appendices with some specifics covered by construction requirements identified in this document.

Verification: Construction/installation verification is expected to be achieved through the following:

Verif. Method	Verif. By	Plan	Notes/Comments
R	**ENV**	Perform a permitted facility document review of DMWU system to verify construction and installation is in compliance with the permitted design.	

3.11.9.2 Handling and Installation Procedures

Requirement: The Permittees must ensure that proper handling procedures are adhered to in order to prevent damage to the LVP selective catalytic oxidizer during installation. Prior to covering, enclosing, or placing the new LVP selective catalytic oxidizer in use, an independent, qualified, installation inspector or an independent, qualified, registered professional engineer, either of whom is trained and experienced in the proper installation of similar systems or components, must inspect the system for the presence of any of the following items:

- Weld breaks.
- Punctures.
- Scrapes of protective coatings.
- Cracks.
- Corrosion.
- Other structural damage or inadequate construction/installation.

All discrepancies must be remedied before the LAW Vitrification System is covered, enclosed, or placed in use [WAC 173-303-640(3)(c), in accordance with WAC 173-303-680(2) and (3)]. [Section III.10.H.1.a.iv, III.10.I.1.a.iv, DWP]

Basis Discussion: This requirement is derived from the Washington Administrative Code (WAC) Dangerous Waste Regulations at WAC Chapter 173-303, specifically the Tank System regulations in WAC 173-303-640.

These regulatory requirements have been incorporated into the Dangerous Waste Permit, WTP- Operating Unit Group 10, WA 7890008967, as permit conditions III.10.H.1.a.iv and III.10.I.1.a.iv.

Verification: Construction/installation verification is expected to be achieved through the following:

Verif. Method	Verif. By	Plan	Notes/Comments
R	**ENV**	Review completed independent qualified inspector installation packages.	

3.11.9.3 Test for Tightness

Requirement: The Permittees must test for tightness the LVP selective catalytic oxidizer, prior to being covered, enclosed, or placed into use. If the LVP selective catalytic oxidizer are found not to be tight, all repairs necessary to remedy the leak(s) in the system must be performed prior to the LAW Vitrification System being covered, enclosed, or placed in use [WAC 173-303-640(3)(e), in accordance with WAC 173-303-680(2) and (3)]. [Section III.10.H.1.a.vi, DWP]

Basis Discussion: This requirement is derived from the Washington Administrative Code (WAC) Dangerous Waste Regulations at WAC Chapter 173-303, specifically the Tank System regulations in WAC 173-303-640. These regulatory requirements have been incorporated into the Dangerous Waste Permit, WTP- Operating Unit Group 10, WA 7890008967, as permit condition III.10.H.1.a.vi.

Verification: Construction/installation verification is expected to be achieved through the following:

Verif. Method	Verif. By	Plan	Notes/Comments
R	**ENV**	Review completed installation packages documentation to ensure the tightness testing was completed.	

3.11.9.4 Support and Protection

Requirement: The Permittees must ensure the LVP selective catalytic oxidizer are supported and protected against physical damage and excessive stress due to settlement, vibration, expansion, or contraction [WAC 173-303-640(3)(f), in accordance with WAC 173-303-680(2) and (3)]. [Section III.10.H.1.a.vii, DWP]

Basis Discussion: This requirement is derived from the Washington Administrative Code (WAC) Dangerous Waste Regulations at WAC Chapter 173-303, specifically the Tank System regulations in WAC 173-303-640. These regulatory requirements have been incorporated into the Dangerous Waste Permit, WTP- Operating Unit Group 10, WA 7890008967, as permit condition III.10.H.1.a.vii.

Verification: Construction/installation verification is expected to be achieved through the following:

Verif. Method	Verif. By	Plan	Notes/Comments
R	**ENV**	Review completed installation packages and nonconformance reports and construction deficiency reports to confirm the plant was constructed in accordance with the approved designs, plans and specifications.	

3.11.9.5 Corrosion Protection

Requirement: The Permittees must provide the type and degree of corrosion protection recommended by an independent corrosion expert, based on the information provided in Operating Unit Group 10, Appendices 9.9 and 9.11 of this Permit, as approved pursuant to Permit Conditions III.10.H.5.b.i., III.10.H.5.b.iv., III.10.H.5.b.v., III.10.H.5.c.i., III.10.H.5.c.iv., III.10.H.5.c.v., III.10.H.5.d.i., III.10.H.5.d.iv., and III.10.H.5.d.v., or other corrosion protection if Ecology believes other corrosion protection is necessary to ensure the integrity of the LVP selective catalytic oxidizer during use of the LAW Vitrification System. The installation of a corrosion protection system that is field fabricated must be supervised by an independent corrosion expert to ensure proper installation [WAC 173-303-640(3)(g), in accordance with WAC 173-303-680(2) and (3)]. [Section III.10.H.1.a.viii, DWP]

Basis Discussion: This requirement is derived from the Washington Administrative Code (WAC) Dangerous Waste Regulations at WAC Chapter 173-303, specifically the Tank System regulations in WAC 173-303-640. These regulatory requirements have been incorporated into the Dangerous Waste Permit, WTP- Operating Unit Group 10, WA 7890008967, as permit condition III.10.H.1.a.viii.

This requirement is not applicable to tank systems with components that are not in contact with soil or water.

Verification: Construction/installation verification is expected to be achieved through the following:

Verif. Method	Verif. By	Plan	Notes/Comments
R	**ENV**	Review completed installation packages to verify the requirements corrosion protection are met.	

3.11.9.6 Monitors and Instrumentation

Requirement: All process monitors/instruments, as specified in Permit Table III.10.H.F (Table 3-25), as approved/modified pursuant to Permit Condition III.10.H.5., will be equipped with operational alarms to warn of deviation, or imminent deviation from the limits specified in Permit Table III.10.H.F. [Sections III.10.H.1.a.xiii, III.10.I.1.vii, Table III.10.H.F, DWP]

Table 3-25 LAW Vitrification System Waste Feed Cutoff Parameters* 1 (RESERVED)

Sub-system Designation	Instrument Tag Number	Parameter Description
RESERVED	RESERVED	RESERVED

Basis Discussion: None.

Verification: Construction/installation verification is expected to be achieved through the following:

Verif. Method	Verif. By	Plan	Notes/Comments
R	**ENV**	Review completed installation packages to verify instrument installation in accordance with the requirement.	

3.11.9.7 Prevention of Escaping Emissions

Requirement: The LVP selective catalytic oxidizer is constructed with features that prevent escape of vapors, fumes, or other emissions into the air. [WAC 173-303-806(4)(i)(i)(B) and WAC 173-303-640(5)(e), in accordance with WAC 173-303-680] [Section III.10.H.1.a.xxix, DWP]

Basis Discussion: This requirement is derived from the Washington Administrative Code (WAC) Dangerous Waste Regulations at WAC Chapter 173-303, specifically the Tank System regulations in WAC 173-303-640. These regulatory requirements have been incorporated into the Dangerous Waste Permit, WTP- Operating Unit Group 10, WA 7890008967, as permit condition III.10.H.1.a.xxix.

Verification: Construction/installation verification is expected to be achieved through the following:

Verif. Method	Verif. By	Plan	Notes/Comments
R	**ENV**	Review as-built P&IDs to verify the system has a vapor collection system and has been constructed according to the design.	

3.11.10 LVP Selective Catalytic Reduction Unit

3.11.10.1 LVP Selective Catalytic Reduction Unit Construction

Requirement: The Permittees will construct the LVP selective catalytic reduction unit listed in Permit Tables III.10.H.A and B. (see Table 3-26), as approved/modified pursuant to Permit Condition III.10.H.5, as specified in Permit Condition III.10.H.1 and Operating Unit Group 10, Chapter 4 of this Permit, and Operating Unit Group 10, Appendices 9.1 through 9.15 and 9.17 of this Permit, as approved pursuant to Permit Conditions III.10.H.5.a. through d., and III.10.H.5.f.

Table 3-26 Selective Catalytic Reduction Unit Construction

Component Number/Location	Description	Material
LVP-SCR-00001 (located on LVP-SKID-00002) L-0304F	NOx Selective Catalytic Reduction Unit	Stainless Steel
LVP-HTR-00002 (located on LVP-SKID-00002) L-0304F	Catalytic Oxidizer Electric Heater	Stainless Steel
LVP-HX-00001 (located on LVP-SKID-00002) L-0304F	Catalytic Oxidizer Heat Recovery Unit	Stainless Steel

[Sections III.10.H.1.a.i, III.10.H.1.a.ii, III.10.I.a.i, III.10.I.a.ii, Table III.10.H.A, Chp. 4E, Table 4E-2, DWP]

Basis Discussion: Important containment features are delineated and described in these appendices with some specifics covered by construction requirements identified in this document.

Verification: Construction/installation verification is expected to be achieved through the following:

Verif. Method	Verif. By	Plan	Notes/Comments
R	**ENV**	Perform a permitted facility document review of DMWU system to verify construction and installation is in compliance with the permitted design.	

3.11.10.2 Handling and Installation Procedures

Requirement: The Permittees must ensure that proper handling procedures are adhered to in order to prevent damage to the LVP selective catalytic reduction unit during installation. Prior to covering, enclosing, or placing the new LVP selective catalytic reduction unit use, an independent, qualified, installation inspector or an independent, qualified, registered professional engineer, either of whom is trained and experienced in the proper installation of similar systems or components, must inspect the system for the presence of any of the following items:

- Weld breaks.
- Punctures.
- Scrapes of protective coatings.
- Cracks.
- Corrosion.
- Other structural damage or inadequate construction/installation.

All discrepancies must be remedied before the LAW Vitrification System is covered, enclosed, or placed in use [WAC 173-303-640(3)(c), in accordance with WAC 173-303-680(2) and (3)]. [Section III.10.H.1.a.iv, III.10.I.1.a.iv, DWP]

Basis Discussion: This requirement is derived from the Washington Administrative Code (WAC) Dangerous Waste Regulations at WAC Chapter 173-303, specifically the Tank System regulations in WAC 173-303-640. These regulatory requirements have been incorporated into the Dangerous Waste Permit, WTP- Operating Unit Group 10, WA 7890008967, as permit conditions III.10.H.1.a.iv and III.10.I.1.a.iv.

Verification: Construction/installation verification is expected to be achieved through the following:

Verif. Method	Verif. By	Plan	Notes/Comments
R	**ENV**	Review completed independent qualified inspector installation packages.	

3.11.10.3 Test for Tightness

Requirement: The Permittees must test for tightness the LVP selective catalytic reduction unit, prior to being covered, enclosed, or placed into use. If the LVP selective catalytic reduction unit are found not to be tight, all repairs necessary to remedy the leak(s) in the system must be performed prior to the LAW Vitrification System being covered, enclosed, or placed in use [WAC 173-303-640(3)(e), in accordance with WAC 173-303-680(2) and (3)]. [Section III.10.H.1.a.vi, DWP]

Basis Discussion: This requirement is derived from the Washington Administrative Code (WAC) Dangerous Waste Regulations at WAC Chapter 173-303, specifically the Tank System regulations in WAC 173-303-640. These regulatory requirements have been incorporated into the Dangerous Waste Permit, WTP- Operating Unit Group 10, WA 7890008967, as permit condition III.10.H.1.a.vi.

Verification: Construction/installation verification is expected to be achieved through the following:

Verif. Method	Verif. By	Plan	Notes/Comments
R	**ENV**	Review completed installation packages documentation to ensure the tightness testing was completed.	

3.11.10.4 Support and Protection

Requirement: The Permittees must ensure the LVP selective catalytic reduction unit are supported and protected against physical damage and excessive stress due to settlement, vibration, expansion, or contraction [WAC 173-303-640(3)(f), in accordance with WAC 173-303-680(2) and (3)]. [Section III.10.H.1.a.vii, DWP]

Basis Discussion: This requirement is derived from the Washington Administrative Code (WAC) Dangerous Waste Regulations at WAC Chapter 173-303, specifically the Tank System regulations in WAC 173-303-640. These regulatory requirements have been incorporated into the Dangerous Waste Permit, WTP- Operating Unit Group 10, WA 7890008967, as permit condition III.10.H.1.a.vii.

Verification: Construction/installation verification is expected to be achieved through the following:

Verif. Method	Verif. By	Plan	Notes/Comments
R	**ENV**	Review completed installation packages and nonconformance reports and construction deficiency reports to confirm the plant was constructed in accordance with the approved designs, plans and specifications.	

3.11.10.5 Corrosion Protection

Requirement: The Permittees must provide the type and degree of corrosion protection recommended by an independent corrosion expert, based on the information provided in Operating Unit Group 10, Appendices 9.9 and 9.11 of this Permit, as approved pursuant to Permit Conditions III.10.H.5.b.i., III.10.H.5.b.iv., III.10.H.5.b.v., III.10.H.5.c.i., III.10.H.5.c.iv., III.10.H.5.c.v., III.10.H.5.d.i., III.10.H.5.d.iv., and III.10.H.5.d.v., or other corrosion protection if Ecology believes other corrosion protection is necessary to ensure the integrity of the LVP selective catalytic reduction unit during use of the LAW Vitrification System. The installation of a corrosion protection system that is field fabricated must be supervised by an independent corrosion expert to ensure proper installation [WAC 173-303-640(3)(g), in accordance with WAC 173-303-680(2) and (3)]. [Section III.10.H.1.a.viii, DWP]

Basis Discussion: This requirement is derived from the Washington Administrative Code (WAC) Dangerous Waste Regulations at WAC Chapter 173-303, specifically the Tank System regulations in WAC 173-303-640. These regulatory requirements have been incorporated into the Dangerous Waste Permit, WTP- Operating Unit Group 10, WA 7890008967, as permit condition III.10.H.1.a.viii.

This requirement is not applicable to tank systems with components that are not in contact with soil or water.

Verification: Construction/installation verification is expected to be achieved through the following:

Verif. Method	Verif. By	Plan	Notes/Comments
R	**ENV**	Review completed installation packages to verify the requirements corrosion protection are met.	

3.11.10.6 Monitors and Instrumentation

Requirement: All process monitors/instruments, as specified in Permit Table III.10.H.F (Table 3-27), as approved/modified pursuant to Permit Condition III.10.H.5., will be equipped with operational alarms to warn of

deviation, or imminent deviation from the limits specified in Permit Table III.10.H.F. [Sections III.10.H.1.a.xiii, III.10.I.1.vii, Table III.10.H.F, DWP]

Table 3-27 LAW Vitrification System Waste Feed Cutoff Parameters* 1 (RESERVED)

Sub-system Designation	Instrument Tag Number	Parameter Description
RESERVED	RESERVED	RESERVED

Basis Discussion: None.

Verification: Construction/installation verification is expected to be achieved through the following:

Verif. Method	Verif. By	Plan	Notes/Comments
R	**ENV**	Review completed installation packages to verify instrument installation in accordance with the requirement.	

3.11.10.7 Prevention of Escaping Emissions

Requirement: The LVP selective catalytic reduction is constructed with features that prevent escape of vapors, fumes, or other emissions into the air. [WAC 173-303-806(4)(i)(i)(B) and WAC 173-303-640(5)(e), in accordance with WAC 173-303-680]. [Section III.10.H.1.a.xxix, DWP]

Basis Discussion: This requirement is derived from the Washington Administrative Code (WAC) Dangerous Waste Regulations at WAC Chapter 173-303, specifically the Tank System regulations in WAC 173-303-640. These regulatory requirements have been incorporated into the Dangerous Waste Permit, WTP- Operating Unit Group 10, WA 7890008967, as permit condition III.10.H.1.a.xxix.

Verification: Construction/installation verification is expected to be achieved through the following:

Verif. Method	Verif. By	Plan	Notes/Comments
R	**ENV**	Review as-built P&IDs to verify the system has a vapor collection system and has been constructed according to the design.	

3.11.11 LOP/LVP Vessels

3.11.11.1 LAW Melter 1 LOP SBS Condensate Vessel (LOP-VSL-00001)

3.11.11.1.1 Vessels Handling and Installation Procedures

Requirement: The installation of the LOP-VSL-00001 shall be performed with proper handling procedures to prevent damage to the system during installation. Prior to covering, enclosing, or placing the LOP-VSL-00001 system or component, an independent, qualified installation inspector or an independent, qualified, registered professional engineer, either of whom is trained and experience in the proper installation of tank systems or components, must inspect the system as specified in WAC 173-303-640 (3)(c), WAC 173-303-640 (3)(h)

- Specify and document the handling or installation procedures to protect the integrity of the tank system. The procedures should prevent or detect the following defects:
    - weld breaks (WAC 173-303-640 (3)(c)(i))
    - punctures (WAC 173-303-640 (3)(c)(ii))
    - scrapes of protective coatings (WAC 173-303-640 (3)(c)(iii))
    - cracks (WAC 173-303-640 (3)(c)(iv))
    - corrosion (WAC 173-303-640 (3)(c)(v))
    - other structural damage or inadequate construction or installation (WAC 173-303-640(3)(c)(vi))
- Specify and document the remedies for any handling or installation procedure discrepancies identified before the tank system is covered, enclosed, or placed in use. (WAC 173-303-640(3)(c))

[Section III.10.E.3.a, Chp. 4.0, Section 4.2.5, DWP]

Basis Discussion: This requirement is derived from the Washington Administrative Code (WAC) Dangerous Waste Regulations at WAC Chapter 173-303, specifically the Tank System regulations in WAC 173-303-640. These regulatory requirements have been incorporated into the Dangerous Waste Permit, WTP- Operating Unit Group 10, WA 7890008967, as permit condition III.10.E.3.a (WAC 173-303-640(3)(c), WAC 173-303-640(3)(h)).

Verification: Construction/installation verification is expected to be achieved through the following:

Verif. Method	Verif. By	Plan	Notes/Comments
R	**ENV**	Review completed independent qualified inspector installation packages.	

3.11.11.1.2 Vessel System Installation Inspection

Requirement: The independent tank system installation inspection and subsequent written statements will be certified pursuant to Permit Condition III.10.E.1.d., comply with all requirements of WAC 173-303-640(3)(h) and will consider, but not be limited to, the following tank system installation documentation:

- Field installation report with date of installation;
- Approved welding procedures;
- Welder qualifications and certification;
- Hydro-test reports, as applicable, in accordance with the American Society of Mechanical Engineers Boiler and Pressure Vessel Code, Section VIII, Division 1, American Petroleum Institute (API) Standard 620, or Standard 650 as applicable;
- Tester credentials;
- Field inspector credentials;
- Field inspector reports;
- Field waiver reports; and
- Non-compliance reports and corrective action (including field waiver reports) and repair reports.

[Section III.10.E.3.g, DWP]

Basis Discussion: None.

Verification: Construction/installation verification is expected to be achieved through the following:

Verif. Method	Verif. By	Plan	Notes/Comments
R	**ENV**	Review completed installation packages for compliance documentation.	

3.11.11.1.3 Vapor Collection System

Requirement: The LOP-VSL-00001 tank system is constructed with features that prevent escape of vapors, fumes, or other emissions into the air. [Section III.10.E.9.c.xii, DWP]

Basis Discussion: This requirement is derived from the Washington Administrative Code (WAC) Dangerous Waste Regulations at WAC Chapter 173-303, specifically the Tank System regulations in WAC 173-303-640. These regulatory requirements have been incorporated into the Dangerous Waste Permit, WTP- Operating Unit Group 10, WA 7890008967, as permit condition III.10.E.9.c.xii (WAC 173-303-640(5)(e)).

Verification: Construction/installation verification is expected to be achieved through the following:

Verif. Method	Verif. By	Plan	Notes/Comments
R	**ENV**	Review tank system as-built P&IDs to verify the system has a vapor collection system and has been constructed according to the design.	

3.11.11.1.4 Vessel Construction

Requirement The LOP-VSL-00001 construction and location shall be in accordance with the locations dimensions, capacities, material and appurtenances as shown the DWP permitted design as shown in Table 3-28

Table 3-28 LAW Melter 1 SBS Condensate Vessel

Vessel Number/Location	Description	Material	Total Volume (US Gallons)	Approximate Dimensions (Inside Diameter) x Height or Length in feed and inches (tangent line/tangent line)
LOP-VSL-00001 L-0124	Law Melter 1 SBS Condensate Vessel	Hastelloy	9,056	12 ft x 8 ft 2 in.

[Chp. 04, Table 4E-1, DWP]

Basis Discussion: Locations, dimensions, capacities, material and appurtenances is provided in DWP Tables 4E-1.

Verification: Construction/installation verification is expected to be achieved through the following:

Verif. Method	Verif. By	Plan	Notes/Comments
R	**ENV**	Perform a review of the manufacturers data sheet to verify the material of construction and dimensions.	

3.11.11.1.5 Tightness Testing

Requirement: The Permittees must test for tightness for the LOP-VSL-00001 system prior to these components being covered, enclosed, or placed into use. If a tank system is found not to be tight, all repairs necessary to remedy the leak(s) in the system must be performed prior to the tank system being covered, enclosed, or placed in use. [Section III.10.E.3.c, DWP]

Basis Discussion: This requirement is derived from the Washington Administrative Code (WAC) Dangerous Waste Regulations at WAC Chapter 173-303, specifically the Tank System regulations in WAC 173-303-640. These regulatory requirements have been incorporated into the Dangerous Waste Permit, WTP- Operating Unit Group 10, WA 7890008967, as permit condition III.10.E.3.c.

Verification: Construction/installation verification is expected to be achieved through the following:

Verif. Method	Verif. By	Plan	Notes/Comments
R	**ENV**	Review completed installation packages documentation to ensure the tightness testing was completed.	

3.11.11.1.6 LOP Melter 1 SBS Condensate Vessel Overflow Prevention Controls

Requirement: The melter 1 SBS condensate vessel shall be constructed with the appropriate instrumentation to allow for the control and prevention of overflow from the tank or containment systems. See Table 3-29 for the overflow instruments.

Table 3-29 Melter 1 Condensate Vessel Overflow Prevention Controls

Monitoring/Control Parameter	Type of Instrument/Control Device	Instrument/Control Device Tag Number
Melter 1 SBS Condensate Vessel LOP-VSL-00001	Level Transmitter	LT-1018
	Level Indicators	LI-1018 LI-1018A
	Level Relay	LY-1018
	Level Switch High High	LSHH-1018
	Level Switch Low Low	LSLL-1018
	Level Alarm High High	LAHH-1018
	Level Alarm Low Low	LALL-1018

[Section III.10.E.5.d, III.10.H.1.a.xvii, DWP]

Basis Discussion: Table 3-29 is developed from 24590-LAW-PER-J-03-003, *System Logic Description for Low-Activity Waste Facility – LAW Primary Offgas Process (LOP) System*. This requirement is derived from the Washington Administrative Code (WAC) Dangerous Waste Regulations at WAC Chapter 173-303, specifically the Tank System regulations in WAC 173-303-640(5)(b). These regulatory requirements have been incorporated into the Dangerous Waste Permit, WTP- Operating Unit Group 10, WA 7890008967, as permit conditions
III.10.E.5.d and III.10.H.1.a.xvii.

Verification: Construction/installation verification is expected to be achieved through the following:

Verif. Method	Verif. By	Plan	Notes/Comments
R	**ENV**	Review the Instrument Data Sheets for the instruments to verify Instruments in Table 3-29.	

3.11.11.1.7 Corrosion Protection

Requirement: The Permittees must provide the type and degree of corrosion protection for LOP-VSL-00001 recommended by an independent corrosion expert, based on the information provided in Operating Unit Group 10, Appendix 9.9, and 9.11 of this Permit, as approved pursuant to Permit Conditions III.10.E.9.b.i., III.10.E.9.b.iv., III.10.E.9.b.v., III.10.E.9.c.i., III.10.E.9.c.iv., III.10.E.9.c.v., III.10.E.9.d.i., III.10.E.9.d.iv., and III.10.E.9.d.v. or other corrosion protection if the Ecology believes other corrosion protection is necessary to ensure the integrity of the tank system during use of the tank system. The installation of a corrosion protection system that is field fabricated must be supervised by an independent corrosion expert to ensure proper installation. [Section III.10.E.3.e, DWP]

Basis Discussion: This requirement is derived from the Washington Administrative Code (WAC) Dangerous Waste Regulations at WAC Chapter 173-303, specifically the Tank System regulations in WAC 173-303-640. These regulatory requirements have been incorporated into the Dangerous Waste Permit, WTP- Operating Unit Group 10, WA 7890008967, as permit condition III.10.E.3.e.

This requirement is not applicable to tank systems with components that are not in contact with soil or water.

Verification: Construction/installation verification is expected to be achieved through the following:

Verif. Method	Verif. By	Plan	Notes/Comments
R	**ENV**	Review completed installation packages to verify the requirements corrosion protection are met.	

3.11.11.1.8 Ancillary Equipment

Requirement: LOP-VSL-00001 ancillary equipment shall be supported and protected against physical damage and excessive stress due to settlement, vibration, expansion, or contraction. (WAC 173-303-640(3)(f)). [Section III.10.E.3.d, DWP]

Basis Discussion: This requirement is derived from the Washington Administrative Code (WAC) Dangerous Waste Regulations at WAC Chapter 173-303, specifically the Tank System regulations in WAC 173-303-640. These regulatory requirements have been incorporated into the Dangerous Waste Permit, WTP- Operating Unit Group 10, WA 7890008967, as permit condition III.10.E.3.d.

Verification: Construction/installation verification is expected to be achieved through the following:

Verif. Method	Verif. By	Plan	Notes/Comments
R	**ENV**	Review completed installation packages and nonconformance reports and construction deficiency reports to confirm the plant was constructed in accordance with the approved designs, plans and specifications.	

3.11.11.2 LAW Melter 2 LOP SBS Condensate Vessel (LOP-VSL-00002)

3.11.11.2.1 Vessels Handling and Installation

Requirement: The installation of the LOP-VSL-00002 permitted vessels shall be performed with proper handling procedures to prevent damage to the system during installation. Prior to covering, enclosing, or placing the LOP-VSL-00002 system or component, an independent, qualified installation inspector or an independent,

qualified, registered professional engineer, either of whom is trained and experience in the proper installation of tank systems or components, must inspect the system as specified in WAC 173-303-640 (3)(c), WAC 173-303-640 (3)(h)

- Specify and document the handling or installation procedures to protect the integrity of the tank system. The procedures should prevent or detect the following defects:
    - weld breaks (WAC 173-303-640 (3)(c)(i))
    - punctures (WAC 173-303-640 (3)(c)(ii))
    - scrapes of protective coatings (WAC 173-303-640 (3)(c)(iii))
    - cracks (WAC 173-303-640 (3)(c)(iv))
    - corrosion (WAC 173-303-640 (3)(c)(v))
    - other structural damage or inadequate construction or installation (WAC 173-303-640(3)(c)(vi))
- Specify and document the remedies for any handling or installation procedure discrepancies identified before the tank system is covered, enclosed, or placed in use. (WAC 173-303-640(3)(c))

[Section III.10.E.3.a, Chp. 4.0, Section 4.2.5, DWP]

Basis Discussion: This requirement is derived from the Washington Administrative Code (WAC) Dangerous Waste Regulations at WAC Chapter 173-303, specifically the Tank System regulations in WAC 173-303-640. These regulatory requirements have been incorporated into the Dangerous Waste Permit, WTP- Operating Unit Group 10, WA 7890008967, as permit condition III.10.E.3.a (WAC 173-303-640(3)(c), WAC 173-303-640(3)(h)).

Verification: Construction/installation verification is expected to be achieved through the following:

Verif. Method	Verif. By	Plan	Notes/Comments
R	**ENV**	Review completed independent qualified inspector installation packages.	

3.11.11.2.2 Vessel System Installation Inspection

Requirement: The independent tank system installation inspection and subsequent written statements will be certified pursuant to Permit Condition III.10.E.1.d., comply with all requirements of WAC 173-303-640(3)(h) and will consider, but not be limited to, the following tank system installation documentation:

- Field installation report with date of installation;
- Approved welding procedures;
- Welder qualifications and certification;
- Hydro-test reports, as applicable, in accordance with the American Society of Mechanical Engineers Boiler and Pressure Vessel Code, Section VIII, Division 1, American Petroleum Institute (API) Standard 620, or Standard 650 as applicable;
- Tester credentials;
- Field inspector credentials;
- Field inspector reports;
- Field waiver reports; and
- Non-compliance reports and corrective action (including field waiver reports) and repair reports.

[Section III.10.E.3.g, DWP]

Basis Discussion: None.

Verification: Construction/installation verification is expected to be achieved through the following:

Verif. Method	Verif. By	Plan	Notes/Comments
R	**ENV**	Review completed installation packages for compliance documentation.	

3.11.11.2.3 Vapor Collection System

Requirement: The LAW LOP-VSL-00002 tank system is constructed with features that prevent escape of vapors, fumes, or other emissions into the air. [Section III.10.E.9.c.xii, DWP]

Basis Discussion: This requirement is derived from the Washington Administrative Code (WAC) Dangerous Waste Regulations at WAC Chapter 173-303, specifically the Tank System regulations in WAC 173-303-640. These regulatory requirements have been incorporated into the Dangerous Waste Permit, WTP- Operating Unit Group 10, WA 7890008967, as permit condition III.10.E.9.c.xii (WAC 173-303-640(5)(e)).

Verification: Construction/installation verification is expected to be achieved through the following:

Verif. Method	Verif. By	Plan	Notes/Comments
R	**ENV**	Review tank system as-built P&IDs to verify the system has a vapor collection system and has been constructed according to the design.	

3.11.11.2.4 Vessel Construction

Requirement: The LOP-VSL-00002 construction and location shall be in accordance with the locations dimensions, capacities, material and appurtenances as shown the DWP permitted design as shown in Table 3-30.

Table 3-30 LAW Melter 2 SBS Condensate Vessel

Vessel Number/Location	Description	Material	Total Volume (US Gallons)	Approximate Dimensions (Inside Diameter) x Height or Length in feed and inches (tangent line/tangent line)
LOP-VSL-00002 L-0123	LAW Melter 2 SBS Condensate Vessel	Hastelloy	9,056	12 ft x 8 ft 2 in.

[Chp. 04, Table 4E-1, DWP]

Basis Discussion: Locations, dimensions, capacities, material and appurtenances is provided in DWP Tables 4E-1.

Verification: Construction/installation verification is expected to be achieved through the following:

Verif. Method	Verif. By	Plan	Notes/Comments
R	**ENV**	Perform a review of the manufacturers data sheet to verify the material of construction and dimensions.	

3.11.11.2.5 Tightness Testing

Requirement: The Permittees must test for tightness for the LOP-VSL-00002 system prior to these components being covered, enclosed, or placed into use. If a tank system is found not to be tight, all repairs necessary to remedy the leak(s) in the system must be performed prior to the tank system being covered, enclosed, or placed in use. [Section III.10.E.3.c, DWP]

Basis Discussion: This requirement is derived from the Washington Administrative Code (WAC) Dangerous Waste Regulations at WAC Chapter 173-303, specifically the Tank System regulations in WAC 173-303-640. These regulatory requirements have been incorporated into the Dangerous Waste Permit, WTP- Operating Unit Group 10, WA 7890008967, as permit condition III.10.E.3.c.

Verification: Construction/installation verification is expected to be achieved through the following:

Verif. Method	Verif. By	Plan	Notes/Comments
R	**ENV**	Review completed installation packages documentation to ensure the tightness testing was completed.	

3.11.11.2.6 Melter 2 SBS Condensate Overflow Prevention Controls

Requirement: The melter 2 SBS condensate vessel shall be constructed with the appropriate instrumentation to allow for the control and prevention of overflow from the tank or containment systems. See Table 3-31 for the overflow instruments.

Table 3-31 Melter 2 SBS Condensate Vessel Prevention Controls

Monitoring/Control Parameter	Type of Instrument/Control Device	Instrument/Control Device Tag Number
Melter 2 SBS Condensate Vessel LOP-VSL-00002	Level Transmitter	LT-2018
	Level Indicators	LI-2018 LI-2018A
	Level Relay	LY-2018
	Level Switch High High	LSHH-2018
	Level Switch Low Low	LSLL-2018
	Level Alarm High High	LAHH-2018
	Level Alarm Low Low	LALL-2018

[Sections III.10.E.9.e.iv, III.10.H.1.a.xvii, DWP]

Basis Discussion: Table 3-29 is developed from 24590-LAW-PER-J-03-003, *System Logic Description for Low-Activity Waste Facility – LAW Primary Offgas Process (LOP) System*. This requirement is derived from the Washington Administrative Code (WAC) Dangerous Waste Regulations at WAC Chapter 173-303, specifically the Tank System regulations in WAC 173-303-640(5)(b). These regulatory requirements have been incorporated into the Dangerous Waste Permit, WTP- Operating Unit Group 10, WA 7890008967, as permit conditions
III.10.E.9.e.iv and III.10.H.1.a.xvii.

Verification: Construction/installation verification is expected to be achieved through the following:

Verif. Method	Verif. By	Plan	Notes/Comments
R	**ENV**	Review the Instrument Data Sheets for the instruments to verify Instruments in Table 3-31.	

3.11.11.2.7 Corrosion Protection

Requirement: The Permittees must provide the type and degree of corrosion protection for LOP-VSL-00002 recommended by an independent corrosion expert, based on the information provided in Operating Unit Group 10, Appendix 9.9, and 9.11 of this Permit, as approved pursuant to Permit Conditions III.10.E.9.b.i., III.10.E.9.b.iv., III.10.E.9.b.v., III.10.E.9.c.i., III.10.E.9.c.iv., III.10.E.9.c.v., III.10.E.9.d.i., III.10.E.9.d.iv., and III.10.E.9.d.v. or other corrosion protection if the Ecology believes other corrosion protection is necessary to ensure the integrity of the tank system during use of the tank system. The installation of a corrosion protection system that is field fabricated must be supervised by an independent corrosion expert to ensure proper installation. [Section III.10.E.3.e, DWP]

Basis Discussion: This requirement is derived from the Washington Administrative Code (WAC) Dangerous Waste Regulations at WAC Chapter 173-303, specifically the Tank System regulations in WAC 173-303-640. These regulatory requirements have been incorporated into the Dangerous Waste Permit, WTP- Operating Unit Group 10, WA 7890008967, as permit condition III.10.E.3.e.

This requirement is not applicable to tank systems with components that are not in contact with soil or water.

Verification: Construction/installation verification is expected to be achieved through the following:

Verif. Method	Verif. By	Plan	Notes/Comments
R	**ENV**	Review completed installation packages to verify the requirements corrosion protection are met.	

3.11.11.2.8 Ancillary Equipment

Requirement: LOP-VSL-00002 ancillary equipment shall be supported and protected against physical damage and excessive stress due to settlement, vibration, expansion, or contraction. (WAC 173-303-640(3)(f)). [Section III.10.E.3.d, DWP]

Basis Discussion: This requirement is derived from the Washington Administrative Code (WAC) Dangerous Waste Regulations at WAC Chapter 173-303, specifically the Tank System regulations in WAC 173-303-640. These regulatory requirements have been incorporated into the Dangerous Waste Permit, WTP- Operating Unit Group 10, WA 7890008967, as permit condition III.10.E.3.d.

Verification: Construction/installation verification is expected to be achieved through the following:

Verif. Method	Verif. By	Plan	Notes/Comments
R	**ENV**	Review completed installation packages and nonconformance reports and construction deficiency reports to confirm the plant was constructed in accordance with the approved designs, plans and specifications.	

3.11.11.3 LVP Caustic Collection Tank (LVP-TK-00001)

3.11.11.3.1 Vessel System Installation Inspection

Requirement: The installation of the LVP-TK-00001 shall be performed with proper handling procedures to prevent damage to the system during installation. Prior to covering, enclosing, or placing the LVP tank system or component, an independent, qualified installation inspector or an independent, qualified, registered professional

engineer, either of whom is trained and experience in the proper installation of tank systems or components, must inspect the system as specified in WAC 173-303-640 (3)(c), WAC 173-303-640 (3)(h)

- Specify and document the handling or installation procedures to protect the integrity of the tank system. The procedures should prevent or detect the following defects:
    - weld breaks (WAC 173-303-640 (3)(c)(i))
    - punctures (WAC 173-303-640 (3)(c)(ii))
    - scrapes of protective coatings (WAC 173-303-640 (3)(c)(iii))
    - cracks (WAC 173-303-640 (3)(c)(iv))
    - corrosion (WAC 173-303-640 (3)(c)(v))
    - other structural damage or inadequate construction or installation (WAC 173-303-640(3)(c)(vi))
- Specify and document the remedies for any handling or installation procedure discrepancies identified before the tank system is covered, enclosed, or placed in use. (WAC 173-303-640(3)(c))

[Section III.10.E.3.a, Chp. 4.0, Section 4.2.5, DWP]

Basis Discussion: This requirement is derived from the Washington Administrative Code (WAC) Dangerous Waste Regulations at WAC Chapter 173-303, specifically the Tank System regulations in WAC 173-303-640. These regulatory requirements have been incorporated into the Dangerous Waste Permit, WTP- Operating Unit Group 10, WA 7890008967, as permit condition III.10.E.3.a (WAC 173-303-640(3)(c), WAC 173-303-640(3)(h)).

Verification: Construction/installation verification is expected to be achieved through the following:

Verif. Method	Verif. By	Plan	Notes/Comments
R	**ENV**	Review completed independent qualified inspector installation packages.	

3.11.11.3.2 System Installation

Requirement: The independent tank system installation inspection and subsequent written statements will be certified pursuant to Permit Condition III.10.E.1.d., comply with all requirements of WAC 173-303-640(3)(h) and will consider, but not be limited to, the following tank system installation documentation:

- Field installation report with date of installation;
- Approved welding procedures;
- Welder qualifications and certification;
- Hydro-test reports, as applicable, in accordance with the American Society of Mechanical Engineers Boiler and Pressure Vessel Code, Section VIII, Division 1, American Petroleum Institute (API) Standard 620, or Standard 650 as applicable;
- Tester credentials;
- Field inspector credentials;
- Field inspector reports;
- Field waiver reports; and
- Non-compliance reports and corrective action (including field waiver reports) and repair reports.

[Section III.10.E.3.g, DWP]

Basis Discussion: None.

Verification: Construction/installation verification is expected to be achieved through the following:

Verif. Method	Verif. By	Plan	Notes/Comments
R	**ENV**	Review completed installation packages for compliance documentation.	

3.11.11.3.3 Vapor Collection System

Requirement: The LVP-TK-00001 tank system is constructed with features that prevent escape of vapors, fumes, or other emissions into the air. [Section III.10.E.9.c.xii, DWP]

Basis Discussion: This requirement is derived from the Washington Administrative Code (WAC) Dangerous Waste Regulations at WAC Chapter 173-303, specifically the Tank System regulations in WAC 173-303-640. These regulatory requirements have been incorporated into the Dangerous Waste Permit, WTP- Operating Unit Group 10, WA 7890008967, as permit condition III.10.E.9.c.xii (WAC 173-303-640(5)(e)).

Verification: Construction/installation verification is expected to be achieved through the following:

Verif. Method	Verif. By	Plan	Notes/Comments
R	**ENV**	Review tank system as-built P&IDs to verify the system has a vapor collection system and has been constructed according to the design.	

3.11.11.3.4 Vessel Construction

Requirement: The LVP-TK-00001 construction and location shall be in accordance with the locations dimensions, capacities, material and appurtenances as shown the DWP permitted design as shown in Table 3-32.

Table 3-32 LAW Casutic Collection Tank

Vessel Number/Location	Description	Material	Total Volume (US Gallons)	Approximate Dimensions (Inside Diameter) x Height or Length in feed and inches (tangent line/tangent line)
LVP-TK-00001 L-0218	LAW Caustic Collection Tank	Stainless Steel	14,232	13 ft. (od) x 14 ft. 4 in.

[Chp. 04, Table 4E-1, DWP]

Basis Discussion: Locations, dimensions, capacities, material and appurtenances is provided in DWP Tables 4E-1.

Verification: Construction/installation verification is expected to be achieved through the following:

Verif. Method	Verif. By	Plan	Notes/Comments
R	**ENV**	Perform a review of the manufacturers data sheet to verify the material of construction and dimensions.	

3.11.11.3.5 Tightness Testing

Requirement: The Permittees must test for tightness for the LVP-TK-00001 system prior to these components being covered, enclosed, or placed into use. If a tank system is found not to be tight, all repairs necessary to remedy the leak(s) in the system must be performed prior to the tank system being covered, enclosed, or placed in use. [Section III.10.E.3.c, DWP]

Basis Discussion: This requirement is derived from the Washington Administrative Code (WAC) Dangerous Waste Regulations at WAC Chapter 173-303, specifically the Tank System regulations in WAC 173-303-640. These regulatory requirements have been incorporated into the Dangerous Waste Permit, WTP- Operating Unit Group 10, WA 7890008967, as permit condition III.10.E.3.c.

Verification: Construction/installation verification is expected to be achieved through the following:

Verif. Method	Verif. By	Plan	Notes/Comments
R	**ENV**	Review completed installation packages documentation to ensure the tightness testing was completed.	

3.11.11.3.6 LVP Caustic Collection Tank Overflow Prevention Controls

Requirement: The LVP caustic collection tank shall be constructed with the appropriate instrumentation to allow for the control and prevention of overflow from the tank or containment systems. See Table 3-33 for the overflow instruments.

Table 3-33 LVP Caustic Collection Tank Overflow Prevention Controls

Monitoring/Control Parameter	Type of Instrument/Control Device	Instrument/Control Device Tag Number
LVP Caustic Collection Tank LVP-TK-00001	Level Transmitter	LT-0055
	Level Indicators	LI-0055 LI-0055D
	Level Relay	LY-0055D
	Level Switch High High	LSHH-0055D
	Level Switch Low Low	LSLL-0055D
	Level Alarm High High	LAHH-0055D
	Level Alarm Low Low	LALL-0055D

[Sections III.10.E.9.e.iv, III.10.H.1.a.xvii, DWP]

Basis Discussion: Table 3-33 is developed from 24590-LAW-PER-J-04-0002, *System Logic Description for Low-Activity Waste Facility – LAW Secondary Offgas Process (LVP) System*. This requirement is derived from the Washington Administrative Code (WAC) Dangerous Waste Regulations at WAC Chapter 173-303, specifically the Tank System regulations in WAC 173-303-640(5)(b). These regulatory requirements have been incorporated into the Dangerous Waste Permit, WTP- Operating Unit Group 10, WA 7890008967, as permit conditions
III.10.E.9.e.iv and III.10.H.1.a.xvii.

Verification: Construction/installation verification is expected to be achieved through the following:

Verif. Method	Verif. By	Plan	Notes/Comments
R	**ENV**	Review the Instrument Data Sheets for the instruments to verify Instruments in Table 3-33.	

3.11.11.3.7 Corrosion Protection

Requirement: The Permittees must provide the type and degree of corrosion protection for LVP-TK-00001 recommended by an independent corrosion expert, based on the information provided in Operating Unit Group 10, Appendix 11.9, and 11.11 of this Permit, as approved pursuant to Permit Conditions III.10.E.9.b.i., III.10.E.9.b.iv., III.10.E.9.b.v., III.10.E.9.c.i., III.10.E.9.c.iv., III.10.E.9.c.v., III.10.E.9.d.i., III.10.E.9.d.iv., and III.10.E.9.d.v. or other corrosion protection if the Ecology believes other corrosion protection is necessary to ensure the integrity of the tank system during use of the tank system. The installation of a corrosion protection system that is field fabricated must be supervised by an independent corrosion expert to ensure proper installation. [Section III.10.E.3.e, DWP]

Basis Discussion: This requirement is derived from the Washington Administrative Code (WAC) Dangerous Waste Regulations at WAC Chapter 173-303, specifically the Tank System regulations in WAC 173-303-640. These regulatory requirements have been incorporated into the Dangerous Waste Permit, WTP- Operating Unit Group 10, WA 7890008967, as permit condition III.10.E.3.e.

This requirement is not applicable to tank systems with components that are not in contact with soil or water.

Verification: Construction/installation verification is expected to be achieved through the following:

Verif. Method	Verif. By	Plan	Notes/Comments
R	**ENV**	Review completed installation packages to verify the requirements corrosion protection are met.	

3.11.11.3.8 Ancillary Equipment

Requirement: LOP-VSL-00002 ancillary equipment shall be supported and protected against physical damage and excessive stress due to settlement, vibration, expansion, or contraction. (WAC 173-303-640(3)(f)). [Section III.10.E.3.d, DWP]

Basis Discussion: This requirement is derived from the Washington Administrative Code (WAC) Dangerous Waste Regulations at WAC Chapter 173-303, specifically the Tank System regulations in WAC 173-303-640. These regulatory requirements have been incorporated into the Dangerous Waste Permit, WTP- Operating Unit Group 10, WA 7890008967, as permit condition III.10.E.3.d.

Verification: Construction/installation verification is expected to be achieved through the following:

Verif. Method	Verif. By	Plan	Notes/Comments
R	**ENV**	Review completed installation packages and nonconformance reports and construction deficiency reports to confirm the plant was constructed in accordance with the approved designs, plans and specifications.	

3.11.12 LOP/LVP Vaults, Rooms and Secondary Containment

3.11.12.1 Melter 1 Process Cell (L-0123)

3.11.12.1.1 L-0123 Dimensions

Requirement: The room No. L-0123 dimensions shall be as indicated in 24590-LAW-PER-M-02-002, *Flooding Volume for LAW Facility*. [Chp. 4E, Table 4E-3, DWP]

Basis of Discussion: The secondary containment for L-0123 is influenced by the geometry and slope of the cell floor. Additionally, the volume of containment is also influenced by the floor size.

Verification: Construction/installation verification is expected to be achieved through the following:

Verif. Method	Verif. By	Plan	Notes/Comments
R	**ENV**	Review the as built general arrangement drawings to verify the dimensions of the cell dimensions.	

3.11.12.1.2 Secondary Containment System Integrity

Requirement: The secondary containment for the melter 1 process cell (L-0123), as approved/modified pursuant to Permit Condition III.10.E.9., are free of cracks or gaps to prevent any migration of dangerous and/or mixed waste or accumulated liquid out of the system to the soil, ground water, or surface water at any time that waste is in the tank system. [WAC 173-303-320, WAC 173-303-640(4)(b)(i), WAC 173-303-640(4)(e)(i)(C), WAC 173-303-640(6), and WAC 173-303-806(4)(c)(vii)]) [Section III.10.E.5.g, DWP]

Basis Discussion: This requirement is derived from the Washington Administrative Code (WAC) Dangerous Waste Regulations at WAC Chapter 173-303, specifically the Tank System regulations in WAC 173-303-640. These regulatory requirements have been incorporated into the Dangerous Waste Permit, WTP- Operating Unit Group 10, WA 7890008967, as permit condition III.10.E.5.g (WAC 173-303-640(4)(e)(i)(C), WAC 173-303-640(4)(e)(i)(D), WAC 173-303-320, WAC 173-303-640(4)(b)(i), WAC 173-303-640(4)(e)(i)(C), WAC 173-303-640(6), and WAC 173-303-806(4)(c)(vii)).

Verification: Construction/installation verification is expected to be achieved through the following:

Verif. Method	Verif. By	Plan	Notes/Comments
I	**ENV**	Perform a permitted facility and system inspection of the tank system to verify construction and installation is free of cracks or gaps to prevent any migration of dangerous and/or mixed waste.	

3.11.12.1.3 Construction of Secondary Containment

Requirement: The Permittees will construct the secondary containment systems for the melter 1 process cell (L-0123), as approved/modified pursuant to Permit Condition III.10.E.9, as specified in Operating Unit Group 10, Appendices 9.2, 9.4 through 9.14, 9.18 of this Permit, as approved pursuant to Permit Conditions III.10.E.9.b., III.10.E.9.c., and III.10.E.9.d. The secondary containment wall coating height required for this room is 4 ft.

[Section III.10.E.2.b, DWP]

Basis of Discussion: Important containment features are delineated and described in these appendices with some specifics covered by construction requirements identified in this document.

Verification: Construction/installation verification is expected to be achieved through the following:

Verif. Method	Verif. By	Plan	Notes/Comments
R	**ENG**	Review as-built drawings of the drawings and specification listed in the requirement.	

3.11.12.1.4 Leak Detection

Requirement: The Permittees will install and test all process and leak detection system monitors/instrumentation as specified in Permit Tables III.10.H.C and III.10.H.F, as approved/modified pursuant to Permit Condition III.10.H.5, in accordance with Operating Unit Group 10, Appendices 9.1, 9.2, and 9.14 of this Permit, as approved pursuant to Permit Conditions III.10.H.5.d.x. and III.10.H.5.f.xvi. [Section III.10.H.1.a.xiv, III.10.I.1.a.viii, DWP]

Basis Discussion: This requirement is derived from the Washington Administrative Code (WAC) Dangerous Waste Regulations at WAC Chapter 173-303, specifically the Tank System Regulations in WAC 173-303-640. These regulatory requirements have been incorporated into the Dangerous Waste Permit, WTP – Operating Unit Group 10, WA 78900089, as permit conditions III.10.H.1.a.xiv and III.10.I.1.a.viii.

Verification: Construction/installation verification is expected to be achieved through the following:

Verif. Method	Verif. By	Plan	Notes/Comments
R	**ENG**	Review the Instrument Data Sheets for the instruments to verify the criteria in Table 3.2.	

3.11.12.1.5 Secondary Containment

Requirement: The Permittees will ensure that the secondary containment systems for the LAW Vitrification System sub-systems listed in Permit Tables III.10.H.A. and III.10.H.B, as approved/modified pursuant to Permit Condition III.10.H.5, are free of cracks or gaps to prevent any migration of dangerous and/or mixed waste or accumulated liquid out of the system to the soil, groundwater, or surface water at any time during use of the LAW Vitrification System sub-systems. Any indication that a crack or gap may exist in the containment systems will be investigated and repaired in accordance with Operating Unit Group 10, Appendix 9.18 of this Permit, as approved pursuant to Permit Condition III.10.H.5.e.v. [WAC 173-303–640(4)(b)(i), WAC 173-303–640(4)(e)(i)(C), and WAC 173-303-640(6), in accordance with WAC 173-303-680(2) and (3), WAC 173-303-806(4)(i)(i)(B), and WAC 173-303-320]. [Section III.10.H.1.a.xx, III.10.I.1.a.xiv, DWP]

Basis Discussion: This requirement is derived from the Washington Administrative Code (WAC) Dangerous Waste Regulations at WAC Chapter 173-303, specifically the Tank System regulations in WAC 173-303-640. These regulatory requirements have been incorporated into the Dangerous Waste Permit, WTP- Operating Unit Group 10, WA 7890008967, as permit conditions III.10.H.1.a.xx and III.10.I.1.a.xiv.

Verification: Construction/installation verification is expected to be achieved through the following:

Verif. Method	Verif. By	Plan	Notes/Comments
I	**ENV**	Perform a permitted facility and system inspection of the tank system to verify construction and installation is free of cracks or gaps to prevent any migration of dangerous and/or mixed waste.	

3.11.12.1.6 Impermeable Coating

Requirement: An impermeable coating, as specified in Operating Unit Group 10, Appendices 9.4, 9.5, 9.7, 9.9, 9.11, and 9.12 of this Permit, as approved pursuant to Permit Condition III.10.H.5.b.v. will be maintained for all concrete containment systems and concrete portions of containment systems for each LAW Vitrification System sub-systems listed in Permit Tables III.10.H.A and III.10.H.B, as approved/modified pursuant to Permit Condition III.10.H.5 (concrete containment systems that do not have a liner, pursuant to WAC 173-303-640(4)(e)(i), in accordance with WAC 173-303-680(2), and have construction joints, will meet the requirements of WAC 173-303-640(4)(e)(ii)(C), in accordance with WAC 173-303-680(2). The coating will prevent migration of any dangerous and mixed waste into the concrete. All coatings will meet the following performance standards:

- The coating must seal the containment surface such that no cracks, seams, or other avenues through which liquid could migrate are present;
- The coating must be of adequate thickness and strength to withstand the normal operation of equipment and personnel within the given area such that degradation or physical damage to the coating or lining can be identified and remedied before dangerous and mixed waste could migrate from the system; and
- The coating must be compatible with the dangerous and mixed waste, treatment reagents, or other materials managed in the containment system [WAC 173-303-640(4)(e)(ii)(D), in accordance with WAC 173-303-680(2) and (3), and WAC 173-303-806(4)(i)(i)(A)].

[Section III.10.I.1.a.xvi, DWP]

Basis of Discussion: This requirement is derived from the Washington Administrative Code (WAC) Dangerous Waste Regulations at WAC Chapter 173-303, specifically the Tank System regulations in WAC 173-303-640. These regulatory requirements have been incorporated into the Dangerous Waste Permit, WTP- Operating Unit Group 10, WA 7890008967, as permit condition III.10.I.1.a.xvi.

Verification: Construction/installation verification is expected to be achieved through the following:

Verif. Method	Verif. By	Plan	Notes/Comments
R	**CON**	Review the construction documentation to verify the impermeable coating have been installed.	
I	**ENV**	Perform a permitted facility and system inspection of tank system to verify construction and installation is in compliance with the permitted design.	

3.11.12.2 Melter 2 Process Cell (L-0124)

3.11.12.2.1 L-0124 Dimensions

Requirement: The room No. L-0124 dimensions shall be as indicated in 24590-LAW-PER-M-02-002, *Flooding Volume for LAW Facility*. [Chp. 4E, Table 4E-3, DWP]

Basis of Discussion: The secondary containment for L-0124 is influenced by the geometry and slope of the cell floor. Additionally, the volume of containment is also influenced by the floor size.

Verification: Construction/installation verification is expected to be achieved through the following:

Verif. Method	Verif. By	Plan	Notes/Comments
R	**ENV**	Review the as built general arrangement drawings to verify the dimensions of the cell dimensions.	

3.11.12.2.2 Secondary Containment System Integrity

Requirement: The secondary containment for the melter 2 process cell (L-0124), as approved/modified pursuant to Permit Condition III.10.E.9., are free of cracks or gaps to prevent any migration of dangerous and/or mixed waste or accumulated liquid out of the system to the soil, ground water, or surface water at any time that waste is in the tank system. [WAC 173-303-320, WAC 173-303-640(4)(b)(i), WAC 173-303-640(4)(e)(i)(C), WAC 173-303-640(6), and WAC 173-303-806(4)(c)(vii)]) [Section III.10.E.5.g, DWP]

Basis Discussion: This requirement is derived from the Washington Administrative Code (WAC) Dangerous Waste Regulations at WAC Chapter 173-303, specifically the Tank System regulations in WAC 173-303-640. These regulatory requirements have been incorporated into the Dangerous Waste Permit, WTP- Operating Unit Group 10, WA 7890008967, as permit condition III.10.E.5.g (WAC 173-303-640(4)(e)(i)(C), WAC 173-303-640(4)(e)(i)(D), WAC 173-303-320, WAC 173-303-640(4)(b)(i), WAC 173-303-640(4)(e)(i)(C), WAC 173-303-640(6), and WAC 173-303-806(4)(c)(vii)).

Verification: Construction/installation verification is expected to be achieved through the following:

Verif. Method	Verif. By	Plan	Notes/Comments
I	**ENV**	Perform a permitted facility and system inspection of the tank system to verify construction and installation is free of cracks or gaps to prevent any migration of dangerous and/or mixed waste.	

3.11.12.2.3 Construction of Secondary Containment

Requirement: The Permittees will construct the secondary containment systems for the melter 2 process cell (L-0124), as approved/modified pursuant to Permit Condition III.10.E.9, as specified in Operating Unit Group 10, Appendices 9.2, 9.4 through 9.14, 9.18 of this Permit, as approved pursuant to Permit Conditions III.10.E.9.b., III.10.E.9.c., and III.10.E.9.d. The secondary containment wall coating height required for this room is 4 ft. [Section III.10.E.2b, DWP]

Basis of Discussion: Important containment features are delineated and described in these appendices with some specifics covered by construction requirements identified in this document.

Verification: Construction/installation verification is expected to be achieved through the following:

Verif. Method	Verif. By	Plan	Notes/Comments
R	**ENG**	Review as-built drawings of the drawings and specification listed in the requirement.	

3.11.12.2.4 Leak Detection

Requirement: The Permittees will install and test all process and leak detection system monitors/instrumentation as specified in Permit Tables III.10.H.C and III.10.H.F, as approved/modified pursuant to Permit Condition III.10.H.5, in accordance with Operating Unit Group 10, Appendices 9.1, 9.2, and 9.14 of this Permit, as approved pursuant to Permit Conditions III.10.H.5.d.x. and III.10.H.5.f.xvi. [Section III.10.H.1.a.xiv, III.10.I.1.a.viii, DWP]

Basis Discussion: This requirement is derived from the Washington Administrative Code (WAC) Dangerous Waste Regulations at WAC Chapter 173-303, specifically the Tank System Regulations in WAC 173-303-640. These regulatory requirements have been incorporated into the Dangerous Waste Permit, WTP – Operating Unit Group 10, WA 78900089, as permit condition III.10.H.1.a.xiv.

Verification: Construction/installation verification is expected to be achieved through the following:

Verif. Method	Verif. By	Plan	Notes/Comments
R	**ENG**	Review the Instrument Data Sheets for the instruments to verify the construction criteria.	

3.11.12.2.5 Secondary Containment

Requirement: The Permittees will ensure that the secondary containment systems for the LAW Vitrification System sub-systems listed in Permit Tables III.10.H.A. and III.10.H.B, as approved/modified pursuant to Permit Condition III.10.H.5, are free of cracks or gaps to prevent any migration of dangerous and/or mixed waste or accumulated liquid out of the system to the soil, groundwater, or surface water at any time during use of the LAW Vitrification System sub-systems. Any indication that a crack or gap may exist in the containment systems will be investigated and repaired in accordance with Operating Unit Group 10, Appendix 9.18 of this Permit, as approved pursuant to Permit Condition III.10.H.5.e.v. [WAC 173-303–640(4)(b)(i), WAC 173-303–640(4)(e)(i)(C), and WAC 173-303-640(6), in accordance with WAC 173-303-680(2) and (3), WAC 173-303-806(4)(i)(i)(B), and WAC 173-303-320]. [Section III.10.H.1.a.xx, III.10.I.1.a.xiv, DWP]

Basis Discussion: This requirement is derived from the Washington Administrative Code (WAC) Dangerous Waste Regulations at WAC Chapter 173-303, specifically the Tank System regulations in WAC 173-303-640. These regulatory requirements have been incorporated into the Dangerous Waste Permit, WTP- Operating Unit Group 10, WA 7890008967, as permit conditions III.10.H.1.a.xx and III.10.I.1.a.xiv.

Verification: Construction/installation verification is expected to be achieved through the following:

Verif. Method	Verif. By	Plan	Notes/Comments
I	**ENV**	Perform a permitted facility and system inspection of the tank system to verify construction and installation is free of cracks or gaps to prevent any migration of dangerous and/or mixed waste.	

3.11.12.2.6 Impermeable Coating

Requirement: An impermeable coating, as specified in Operating Unit Group 10, Appendices 9.4, 9.5, 9.7, 9.9, 9.11, and 9.12 of this Permit, as approved pursuant to Permit Condition III.10.H.5.b.v. will be maintained for all concrete containment systems and concrete portions of containment systems for each LAW Vitrification System sub-systems listed in Permit Tables III.10.H.A and III.10.H.B, as approved/modified pursuant to Permit Condition

III.10.H.5 (concrete containment systems that do not have a liner, pursuant to WAC 173-303-640(4)(e)(i), in accordance with WAC 173-303-680(2), and have construction joints, will meet the requirements of WAC 173-303-640(4)(e)(ii)(C), in accordance with WAC 173-303-680(2). The coating will prevent migration of any dangerous and mixed waste into the concrete. All coatings will meet the following performance standards:

- The coating must seal the containment surface such that no cracks, seams, or other avenues through which liquid could migrate are present;
- The coating must be of adequate thickness and strength to withstand the normal operation of equipment and personnel within the given area such that degradation or physical damage to the coating or lining can be identified and remedied before dangerous and mixed waste could migrate from the system; and
- The coating must be compatible with the dangerous and mixed waste, treatment reagents, or other materials managed in the containment system [WAC 173-303-640(4)(e)(ii)(D), in accordance with WAC 173-303-680(2) and (3), and WAC 173-303-806(4)(i)(i)(A)].

[Section III.10.I.1.a.xvi, DWP]

Basis of Discussion: This requirement is derived from the Washington Administrative Code (WAC) Dangerous Waste Regulations at WAC Chapter 173-303, specifically the Tank System regulations in WAC 173-303-640. These regulatory requirements have been incorporated into the Dangerous Waste Permit, WTP- Operating Unit Group 10, WA 7890008967, as permit condition III.10.I.1.a.xvi.

Verification: Construction/installation verification is expected to be achieved through the following:

Verif. Method	Verif. By	Plan	Notes/Comments
R	**CON**	Review the construction documentation to verify the impermeable coating have been installed.	
I	**ENV**	Perform a permitted facility and system inspection of tank system to verify construction and installation is in compliance with the permitted design.	

3.11.12.3 Caustic Scrubber Blowdown Collection Berm (L-0218)

3.11.12.3.1 L-0218 Berm Dimensions

Requirement: The caustic scrubber blowdown collection berm in room No. L-0218 dimensions shall be as indicated in 24590-LAW-PER-M-02-002, *Flooding Volume for LAW Facility*. [Chp. 4E, Table 4E-3, DWP]

Basis of Discussion: The secondary containment for L-0218 berm is influenced by the geometry and slope of the cell floor. Additionally, the volume of containment is also influenced by the floor size.

Verification: Construction/installation verification is expected to be achieved through the following:

Verif. Method	Verif. By	Plan	Notes/Comments
R	**ENV**	Review the as built general arrangement drawings to verify the dimensions of the cell dimensions.	

3.11.12.3.2 Secondary Containment System Integrity

Requirement: The secondary containment for the caustic scrubber system, as approved/modified pursuant to Permit Condition III.10.E.9., are free of cracks or gaps to prevent any migration of dangerous and/or mixed waste or accumulated liquid out of the system to the soil, ground water, or surface water at any time that waste is in the

tank system. [WAC 173-303-320, WAC 173-303-640(4)(b)(i), WAC 173-303-640(4)(e)(i)(C), WAC 173-303-640(6), and WAC 173-303-806(4)(c)(vii)]) [Section III.10.E.5.g, DWP]

Basis Discussion: This requirement is derived from the Washington Administrative Code (WAC) Dangerous Waste Regulations at WAC Chapter 173-303, specifically the Tank System regulations in WAC 173-303-640. These regulatory requirements have been incorporated into the Dangerous Waste Permit, WTP- Operating Unit Group 10, WA 7890008967, as permit condition III.10.E.5.g (WAC 173-303-640(4)(e)(i)(C), WAC 173-303-640(4)(e)(i)(D), WAC 173-303-320, WAC 173-303-640(4)(b)(i), WAC 173-303-640(4)(e)(i)(C), WAC 173-303-640(6), and WAC 173-303-806(4)(c)(vii)).

Verification: Construction/installation verification is expected to be achieved through the following:

Verif. Method	Verif. By	Plan	Notes/Comments
I	**ENV**	Perform a permitted facility and system inspection of the tank system to verify construction and installation is free of cracks or gaps to prevent any migration of dangerous and/or mixed waste.	

3.11.12.3.3 Construction of Secondary Containment

Requirement: The Permittees will construct the secondary containment systems for the caustic scrubber system (L-0218 berm), as approved/modified pursuant to Permit Condition III.10.E.9., as specified in Operating Unit Group 10, Appendices 9.2, 9.4 through 9.14, 9.18 of this Permit, as approved pursuant to Permit Conditions III.10.E.9.b., III.10.E.9.c., and III.10.E.9.d. [Section III.10.E.2b, DWP]

Basis of Discussion: Important containment features are delineated and described in these appendices with some specifics covered by construction requirements identified in this document.

Verification: Construction/installation verification is expected to be achieved through the following:

Verif. Method	Verif. By	Plan	Notes/Comments
R	**ENG**	Review as-built drawings of the drawings and specification listed in the requirement.	

3.11.12.3.4 Leak Detection

Requirement: The Permittees will install and test all process and leak detection system monitors/instrumentation as specified in Permit Tables III.10.H.C and III.10.H.F, as approved/modified pursuant to Permit Condition III.10.H.5, in accordance with Operating Unit Group 10, Appendices 9.1, 9.2, and 9.14 of this Permit, as approved pursuant to Permit Conditions III.10.H.5.d.x. and III.10.H.5.f.xvi. [Section III.10.H.1.a.xiv, III.10.I.1.a.viii, DWP]

Basis Discussion: This requirement is derived from the Washington Administrative Code (WAC) Dangerous Waste Regulations at WAC Chapter 173-303, specifically the Tank System Regulations in WAC 173-303-640. These regulatory requirements have been incorporated into the Dangerous Waste Permit, WTP – Operating Unit Group 10, WA 78900089, as permit conditions III.10.H.1.a.xiv and III.10.I.1.a.viii.

Verification: Construction/installation verification is expected to be achieved through the following:

Verif. Method	Verif. By	Plan	Notes/Comments
R	**ENG**	Review the Instrument Data Sheets for the instruments to verify the construction criteria.	

3.11.12.3.5 Secondary Containment

Requirement: The Permittees will ensure that the secondary containment systems for the LAW Vitrification System sub-systems listed in Permit Tables III.10.H.A. and III.10.H.B, as approved/modified pursuant to Permit Condition III.10.H.5, are free of cracks or gaps to prevent any migration of dangerous and/or mixed waste or accumulated liquid out of the system to the soil, groundwater, or surface water at any time during use of the LAW Vitrification System sub-systems. Any indication that a crack or gap may exist in the containment systems will be investigated and repaired in accordance with Operating Unit Group 10, Appendix 9.18 of this Permit, as approved pursuant to Permit Condition III.10.H.5.e.v. [WAC 173-303–640(4)(b)(i), WAC 173-303–640(4)(e)(i)(C), and WAC 173-303-640(6), in accordance with WAC 173-303-680(2) and (3), WAC 173-303-806(4)(i)(i)(B), and WAC 173-303-320]. [Section III.10.H.1.a.xx, III.10.I.1.a.xiv, DWP]

Basis Discussion: This requirement is derived from the Washington Administrative Code (WAC) Dangerous Waste Regulations at WAC Chapter 173-303, specifically the Tank System regulations in WAC 173-303-640. These regulatory requirements have been incorporated into the Dangerous Waste Permit, WTP- Operating Unit Group 10, WA 7890008967, as permit condition III.10.H.1.a.xx.

Verification: Construction/installation verification is expected to be achieved through the following:

Verif. Method	Verif. By	Plan	Notes/Comments
I	**ENV**	Perform a permitted facility and system inspection of the tank system to verify construction and installation is free of cracks or gaps to prevent any migration of dangerous and/or mixed waste.	

3.11.12.3.6 Impermeable Coating

Requirement: An impermeable coating, as specified in Operating Unit Group 10, Appendices 9.4, 9.5, 9.7, 9.9, 9.11, and 9.12 of this Permit, as approved pursuant to Permit Condition III.10.H.5.b.v. will be maintained for all concrete containment systems and concrete portions of containment systems for each LAW Vitrification System sub-systems listed in Permit Tables III.10.H.A and III.10.H.B, as approved/modified pursuant to Permit Condition III.10.H.5 (concrete containment systems that do not have a liner, pursuant to WAC 173-303-640(4)(e)(i), in accordance with WAC 173-303-680(2), and have construction joints, will meet the requirements of WAC 173-303-640(4)(e)(ii)(C), in accordance with WAC 173-303-680(2). The coating will prevent migration of any dangerous and mixed waste into the concrete. All coatings will meet the following performance standards:

- The coating must seal the containment surface such that no cracks, seams, or other avenues through which liquid could migrate are present;
- The coating must be of adequate thickness and strength to withstand the normal operation of equipment and personnel within the given area such that degradation or physical damage to the coating or lining can be identified and remedied before dangerous and mixed waste could migrate from the system; and

- The coating must be compatible with the dangerous and mixed waste, treatment reagents, or other materials managed in the containment system [WAC 173-303-640(4)(e)(ii)(D), in accordance with WAC 173-303-680(2) and (3), and WAC 173-303-806(4)(i)(i)(A)].

[Section III.10.I.1.a.xvi, DWP]

Basis of Discussion: This requirement is derived from the Washington Administrative Code (WAC) Dangerous Waste Regulations at WAC Chapter 173-303, specifically the Tank System regulations in WAC 173-303-640. These regulatory requirements have been incorporated into the Dangerous Waste Permit, WTP- Operating Unit Group 10, WA 7890008967, as permit condition III.10.I.1.a.xvi.

Verification: Construction/installation verification is expected to be achieved through the following:

Verif. Method	Verif. By	Plan	Notes/Comments
R	**CON**	Review the construction documentation to verify the impermeable coating have been installed.	
I	**ENV**	Perform a permitted facility and system inspection of tank system to verify construction and installation is in compliance with the permitted design.	

3.11.12.4 Caustic Scrubber Curb Area (L-0304F curbed section only)

3.11.12.4.1 L-0304F Dimensions

Requirement: The caustic scrubber curb area in room No. L-0304F dimensions shall be as indicated in 24590-LAW-PER-M-02-002, *Flooding Volume for LAW Facility*. [Chp. 4E, Table 4E-3, DWP]

Basis of Discussion: The secondary containment for L-0304 is influenced by the geometry and slope of the cell floor. Additionally, the volume of containment is also influenced by the floor size.

Verification: Construction/installation verification is expected to be achieved through the following:

Verif. Method	Verif. By	Plan	Notes/Comments
R	**ENV**	Review the as built general arrangement drawings to verify the dimensions of the cell dimensions.	

3.11.12.4.2 Secondary Containment System Integrity

Requirement: The secondary containment for the caustic scrubber system, as approved/modified pursuant to Permit Condition III.10.E.9., are free of cracks or gaps to prevent any migration of dangerous and/or mixed waste or accumulated liquid out of the system to the soil, ground water, or surface water at any time that waste is in the tank system. [WAC 173-303-320, WAC 173-303-640(4)(b)(i), WAC 173-303-640(4)(e)(i)(C), WAC 173-303-640(6), and WAC 173-303-806(4)(c)(vii)]) [Section III.10.E.5.g, DWP]

Basis Discussion This requirement is derived from the Washington Administrative Code (WAC) Dangerous Waste Regulations at WAC Chapter 173-303, specifically the Tank System regulations in WAC 173-303-640. These regulatory requirements have been incorporated into the Dangerous Waste Permit, WTP- Operating Unit Group 10, WA 7890008967, as permit condition III.10.E.5.g (WAC 173-303-640(4)(e)(i)(C), WAC 173-303-640(4)(e)(i)(D), WAC 173-303-320, WAC 173-303-640(4)(b)(i), WAC 173-303-640(4)(e)(i)(C), WAC 173-303-640(6), and WAC 173-303-806(4)(c)(vii)).

Verification: Construction/installation verification is expected to be achieved through the following:

Verif. Method	Verif. By	Plan	Notes/Comments
I	**ENV**	Perform a permitted facility and system inspection of the tank system to verify construction and installation is free of cracks or gaps to prevent any migration of dangerous and/or mixed waste.	

3.11.12.4.3 Construction of Secondary Containment

Requirement: The Permittees will construct the secondary containment systems for the caustic scrubber system (L-0304F curb), as approved/modified pursuant to Permit Condition III.10.E.9., as specified in Operating Unit Group 10, Appendices 9.2, 9.4 through 9.14, 9.18 of this Permit, as approved pursuant to Permit Conditions III.10.E.9.b., III.10.E.9.c., and III.10.E.9.d. [Section III.10.E.2.b, DWP]

Basis of Discussion: Important containment features are delineated and described in these appendices with some specifics covered by construction requirements identified in this document.

Verification: Construction/installation verification is expected to be achieved through the following:

Verif. Method	Verif. By	Plan	Notes/Comments
R	**ENG**	Review as-built drawings of the drawings and specification listed in the requirement.	

3.11.12.4.4 Leak Detection

Requirement: The Permittees will install and test all process and leak detection system monitors/instrumentation as specified in Permit Tables III.10.H.C and III.10.H.F, as approved/modified pursuant to Permit Condition III.10.H.5, in accordance with Operating Unit Group 10, Appendices 9.1, 9.2, and 9.14 of this Permit, as approved pursuant to Permit Condition III.10.H.5.d.x. and III.10.H.5.f.xvi. [Sections III.10.H.1.a.xiv, III.10.I.1.a.viii, DWP]

Basis Discussion: This requirement is derived from the Washington Administrative Code (WAC) Dangerous Waste Regulations at WAC Chapter 173-303, specifically the Tank System Regulations in WAC 173-303-640. These regulatory requirements have been incorporated into the Dangerous Waste Permit, WTP – Operating Unit Group 10, WA 78900089, as permit conditions III.10.H.1.a.xiv and III.10.I.1.a.viii.

Verification: Construction/installation verification is expected to be achieved through the following:

Verif. Method	Verif. By	Plan	Notes/Comments
R	**ENG**	Review the Instrument Data Sheets for the instruments to verify the construction criteria.	

3.11.12.4.5 Secondary Containment

Requirement: The Permittees will ensure that the secondary containment systems for the LAW Vitrification System sub-systems listed in Permit Tables III.10.H.A. and III.10.H.B, as approved/modified pursuant to Permit Condition III.10.H.5, are free of cracks or gaps to prevent any migration of dangerous and/or mixed waste or accumulated liquid out of the system to the soil, groundwater, or surface water at any time during use of the LAW Vitrification System sub-systems. Any indication that a crack or gap may exist in the containment systems will

be investigated and repaired in accordance with Operating Unit Group 10, Appendix 9.18 of this Permit, as approved pursuant to Permit Condition III.10.H.5.e.v. [WAC 173-303–640(4)(b)(i), WAC 173-303–640(4)(e)(i)(C), and WAC 173-303-640(6), in accordance with WAC 173-303-680(2) and (3), WAC 173-303-806(4)(i)(i)(B), and WAC 173-303-320]. [Section III.10.H.1.a.xx, III.10.I.1.a.xiv, DWP]

Basis Discussion: This requirement is derived from the Washington Administrative Code (WAC) Dangerous Waste Regulations at WAC Chapter 173-303, specifically the Tank System regulations in WAC 173-303-640. These regulatory requirements have been incorporated into the Dangerous Waste Permit, WTP- Operating Unit Group 10, WA 7890008967, as permit conditions III.10.H.1.a.xx and III.10.I.1.a.xiv.

Verification: Construction/installation verification is expected to be achieved through the following:

Verif. Method	Verif. By	Plan	Notes/Comments
I	**ENV**	Perform a permitted facility and system inspection of the tank system to verify construction and installation is free of cracks or gaps to prevent any migration of dangerous and/or mixed waste.	

3.11.12.4.6 Impermeable Coating

Requirement: An impermeable coating, as specified in Operating Unit Group 10, Appendices 9.4, 9.5, 9.7, 9.9, 9.11, and 9.12 of this Permit, as approved pursuant to Permit Condition III.10.H.5.b.v. will be maintained for all concrete containment systems and concrete portions of containment systems for each LAW Vitrification System sub-systems listed in Permit Tables III.10.H.A and III.10.H.B, as approved/modified pursuant to Permit Condition III.10.H.5 (concrete containment systems that do not have a liner, pursuant to WAC 173-303-640(4)(e)(i), in accordance with WAC 173-303-680(2), and have construction joints, will meet the requirements of WAC 173-303-640(4)(e)(ii)(C), in accordance with WAC 173-303-680(2). The coating will prevent migration of any dangerous and mixed waste into the concrete. All coatings will meet the following performance standards:

- The coating must seal the containment surface such that no cracks, seams, or other avenues through which liquid could migrate are present;
- The coating must be of adequate thickness and strength to withstand the normal operation of equipment and personnel within the given area such that degradation or physical damage to the coating or lining can be identified and remedied before dangerous and mixed waste could migrate from the system; and
- The coating must be compatible with the dangerous and mixed waste, treatment reagents, or other materials managed in the containment system [WAC 173-303-640(4)(e)(ii)(D), in accordance with WAC 173-303-680(2) and (3), and WAC 173-303-806(4)(i)(i)(A)].

[Section III.10.I.1.a.xvi, DWP]

Basis of Discussion: This requirement is derived from the Washington Administrative Code (WAC) Dangerous Waste Regulations at WAC Chapter 173-303, specifically the Tank System regulations in WAC 173-303-640. These regulatory requirements have been incorporated into the Dangerous Waste Permit, WTP- Operating Unit Group 10, WA 7890008967, as permit condition III.10.I.1.a.xvi.

Verification: Construction/installation verification is expected to be achieved through the following:

Verif. Method	Verif. By	Plan	Notes/Comments
R	**CON**	Review the construction documentation to verify the impermeable coating have been installed.	

Verif. Method	Verif. By	Plan	Notes/Comments
I	**ENV**	Perform a permitted facility and system inspection of tank system to verify construction and installation is in compliance with the permitted design.	

3.11.12.4.7 Secondary Containment Seal Penetrations (L-0304F)

Requirement: The seal penetrations listed in Table 3-34, for room L-0304F shall be installed to prevent any migration fo wastes or accumulated liquid out fo the system to the soil, groundwater, or suface water at any time during the use of the tank system. [Sections III.10.E.5.g, III.10.H.1.a.xx, III.10.H.1.a.xiv, III.10.J.1.a.xx, Table III.10.H.G, DWP]

Table 3-34 Seal Penetration for Room L-0304F

Row Number	Room Number	Orientation	Discipline	Sequence Number
58.	L-0304F	F	PD	03278
59.	L-0304F	F	PD	03277

Basis Discussion: This requirement is derived from the Washington Administrative Code (WAC) Dangerous Waste Regulations at WAC Chapter 173-303, specifically the Tank System regulations in WAC 173-303-640. These regulatory requirements have been incorporated into the Dangerous Waste Permit, WTP- Operating Unit Group 10, WA 7890008967.

Verification: Construction/installation verification is expected to be achieved through the following:

Verif. Method	Verif. By	Plan	Notes/Comments
R	**ENV**	Review completed independent qualified inspector installation packages.	

3.11.13 LOP Bulges

3.11.13.1 LOP Bulges and Floor Drains Construction

Requirement: The Permittees will construct the LOP bulges listed in Permit Tables III.10.H.B. (see Table 3-35 and Table 3-36), as approved/modified pursuant to Permit Condition III.10.H.5, as specified in Permit Condition III.10.H.1 and Operating Unit Group 10, Chapter 4 of this Permit, and Operating Unit Group 10, Appendices 9.1 through 9.15 and 9.17 of this Permit, as approved pursuant to Permit Conditions III.10.H.5.a. through d., and III.10.H.5.f.

Table 3-35 LOP Bulge Secondary Containment

Room/Area	Approximate Room/Area Dimensions (LxW feet)	Miscellaneous Treatment Units or Tanks in Room/Area (Largest Plant Item)	Volume Largest Plant Item in Room/Area (US Gallons)	Minimum Secondary Containment Height (feet)
LOP-BULGE-00001 (L-0202)	Secondary containment for ancillary equipment, no minimum liner height required.			

Room/Area	Approximate Room/Area Dimensions (LxW feet)	Miscellaneous Treatment Units or Tanks in Room/Area (Largest Plant Item)	Volume Largest Plant Item in Room/Area (US Gallons)	Minimum Secondary Containment Height (feet)
LOP-BULGE-00002 (L-0202)				

Table 3-36 LOP Bulges Sump/Floor Drain Dimensions, Construction and Design Documents

Sump/Leak Detection Box or Floor Drain/Line I.D.#, Room and Elevation	Sump/Leak Detection Box or floor Drain/Line Dimensions (approximate) and Materials of Construction
LOP-FD-00001 Floor Drain L-0123 (LOP-BULGE-00001 Drain, El. 3 ft.)	2" Dia. 6% Mo
LOP-FD-00002 Floor Drain L-0124 (LOP-BULGE-00002 Drain, El. 3)	2" Dia. 6% Mo

[Sections III.10.H.1.a.i, III.10.H.1.a.ii, III.10.I.1.a.i, III.10.I.1.a.ii, Table III.10.E.L, Chp. 4E, Tables 4E-3 and 4E-4, DWP]

Basis Discussion: Important containment features are delineated and described in these appendices with some specifics covered by construction requirements identified in this document.

Verification: Construction/installation verification is expected to be achieved through the following:

Verif. Method	Verif. By	Plan	Notes/Comments
R	**ENG**	Review as-built drawings of the drawings and specification listed in the requirement.	
I	**ENV**	Perform a permitted facility and system inspection of DMWU system to verify construction and installation is in compliance with the permitted design.	

3.11.13.2 Support and Protection

Requirement: The Permittees must ensure the LOP bulges are supported and protected against physical damage and excessive stress due to settlement, vibration, expansion, or contraction [WAC 173-303-640(3)(f), in accordance with WAC 173-303-680(2) and (3)]. [Section III.10.H.1.a.vii, DWP]

Basis Discussion: This requirement is derived from the Washington Administrative Code (WAC) Dangerous Waste Regulations at WAC Chapter 173-303, specifically the Tank System regulations in WAC 173-303-640. These regulatory requirements have been incorporated into the Dangerous Waste Permit, WTP- Operating Unit Group 10, WA 7890008967, as permit condition III.10.H.1.a.vii.

Verification: Construction/installation verification is expected to be achieved through the following:

Verif. Method	Verif. By	Plan	Notes/Comments
R	**ENV**	Review completed installation packages and nonconformance reports and construction deficiency reports to confirm the plant was constructed in accordance with the approved designs, plans and specifications.	

3.11.13.3 Prevention of Escaping Emissions

Requirement: For each LAW Vitrification System sub-system holding dangerous waste which are acutely or chronically toxic by inhalation, the Permittees will operate the system to prevent escape of vapors, fumes or other emissions into the air [WAC 173-303-806(4)(i)(i)(B) and WAC 173-303-640(5)(e), in accordance with WAC 173-303-680]. [Section III.10.H.1.a.xxix, DWP]

Basis Discussion: This requirement is derived from the Washington Administrative Code (WAC) Dangerous Waste Regulations at WAC Chapter 173-303, specifically the Tank System regulations in WAC 173-303-640. These regulatory requirements have been incorporated into the Dangerous Waste Permit, WTP- Operating Unit Group 10, WA 7890008967, as permit condition III.10.H.1.a.xxix.

Verification: Construction/installation verification is expected to be achieved through the following:

Verif. Method	Verif. By	Plan	Notes/Comments
R	**ENV**	Review as-built P&IDs to verify the system has a vapor collection system and has been constructed according to the design.	

3.11.14 LOP/LVP Aboveground Piping

Requirement: Tank system above ground piping shall be constructed of the materials specified in the approved design. [Sections III.10.C.10.a, III.10.C.9.c, III.10.E.2.a, DWP]

Basis Discussion: The requirement to verify the materials for above ground piping is a direct request for ecology to certify the materials in use for the piping.

Verification: Construction/installation verification is expected to be achieved through the following:

Verif. Method	Verif. By	Plan	Notes/Comments
R	**ENV**	Review of construction and installation will be accomplished through the 24590-WTP-GPG-ENG-087, *Statistical Sampling Methods of Engineering Quality Monitoring and Inspection.*	

Attachment 8
18-ECD-0078
(24 Pages Excluding Cover Sheet)

24590-LA W-3ZN-RLD-00005, *Updated LAW RLD SDD to Align Content with RLD System Related Upper Tier Requirements Changes in the Document 24590-LAW-DSA-NS-18-0001, Documented Safety Analysis (DSA) for the Low-Activity Waste Facility*

System Design Description Change Notice

CHANGE DOCUMENT NO. 24590-LAW-3ZN-RLD-00005

JOB NO.	TITLE FOR CHANGE NOTICE
24590	Updated LAW RLD SDD to align content with RLD sytem related upper tier requirements changes in the document 24590-LAW-DSA-NS-18-0001, Documented Safety Analysis (DSA) for the Low-Activity Waste Facility

DOCUMENT NUMBER	REV	DOCUMENT NUMBER	REV
24590-LAW-3ZD-RLD-00001	2		

PART OF DESIGN CHANGE PACKAGE (DCP)? ☐ Yes ☒ No

Justification for no DCP: Impacted SSC has not been turned over to the Plant Management organization.

INCORPORATES AN EIE? ☒ Yes ☐ No If yes, list EIEs:

24590-LAW-EIE-J-17-0016 Rev 0
24590-WTP-EIE-ENG-17-0018 Rev 0
24590-LAW-EIE-M-15-0007 Rev 1
24590-WTP-EIE-MS-16-0003 Rev 0
24590-WTP-EIE-MS-16-0004 Rev 0
24590-WTP-EIE-MS-16-0010 Rev 0
24590-WTP-EIE-MS-16-0017 Rev 0
24590-WTP-EIE-MS-16-0033 Rev 0
24590-LAW-EIE-M-16-0040 Rev 0
24590-LAW-EIE-MS-17-0026 Rev 0
24590-WTP-EIE-PR-17-0001 Rev 0
24590-LAW-EIE-PE-17-0004 Rev 0
24590-WTP-EIE-P-18-0001 Rev 0
24590-WTP-EIE-SYSE-16-0085 Rev 0

JUSTIFICATION FOR CHANGE

The LAW RLD SDD was updated to align content with RLD system related upper tier requirements changes in the LAW DSA.
EIEs were evaluated for their impact to the LAW RLD SDD (24590-LAW-3ZD-RLD-00001 Rev 2).

Supersedes Change Document ☐ Yes ☒ No

REQUIREMENTS REVIEW

Client Approval Required	☐ Yes	☒ No	Interface Resolution Required *	☐ Yes	☒ No

Address any "yes" answers in the description

DESCRIPTION OF CHANGE

- Updated Sections 1.5.1, 1.5.2, 3.4.2.1.1, 3.4.2.1.2, 3.4.2.1.3, 3.9.2.1, 5.1, 5.2, Table 3-4, Table 4-7, and Appendix A to align RLD SDD content with the LAW DSA. In addition, Appendix C was deleted.
- Updated section 3.4.4.3 per management's direction to remove testing and analysis verification method, and deleted section 3.4.4.3 test from Appendix A.
- The following EIE was evaluated and have no impact on the LAW RLD SDD (24590-LAW-3ZD-RLD-00001 Rev 2):
  - EIE 24590-WTP-EIE-ENG-17-0018 Rev 0 –The change in contact dose rates for the LAW RLD process streams have no impact on the LAW RLD SDD, as section 4 of the LAW RLD SDD did not discuss dose rates and the section 3 covered dose rates in terms of the RLD SSCs's ability to function in the expected operational environment and worker protection.
  - EIE 24590-LAW-EIE-M-15-0007 Rev 1 – The currently issued LAW RLD SDD (24590-LAW-3ZD-RLD-00001 Rev 2) already includes the changes associated with this EIE. These changes were incorporated in document 24590-LAW-3ZD-RLD-00001 Rev 1 by adding Figure 4-1 and revising section 4 to change the description of process streams to RLD-VSL-00003 and RLD-VSL-00004.
  - EIE 24590-LAW-EIE-M-16-0040 Rev 0 – The changes initiated by the document referenced by the EIE have no impact to the LAW RLD SDD since the requirement that would have been impacted by the change through the verification method of testing was revised by this change notice to remove testing from the verification method.
  - EIE 24590-WTP-EIE-MS-16-0004 Rev 0– The currently issued LAW RLD SDD (24590-LAW-3ZD-RLD-00001 Rev 2) already includes the changes associated with this EIE. The changes were incorporated in document 24590-LAW-3ZD-RLD-00001 Rev 2 in Figures 2-1. 2-2. 2-3, Table 2-2, and Section 4.
  - EIE 24590-WTP-EIE-MS-16-0017 Rev 0 – The currently issued LAW RLD SDD (24590-LAW-3ZD-RLD-00001 Rev 2) already includes the changes associated with this EIE. The changes were incorporated in document 24590-LAW-3ZD-RLD-00001 Rev 2 by updating the design volume in Section 4.1.3.
  - EIE 24590-WTP-EIE-MS-16-0033 Rev 0 – The changes evaluated by this EIE have no impact to the LAW RLD SDD as the fluid properties of the fluid transferred by the sump pumps were not included in the LAW RLD SDD, and the subsequent revision on the

System Design Description Change Notice

CHANGE DOCUMENT NO.
24590-LAW-3ZN-RLD-00005

JOB NO.	TITLE FOR CHANGE NOTICE
24590	Updated LAW RLD SDD to align content with RLD sytem related upper tier requirements changes in the document 24590-LAW-DSA-NS-18-0001, Documented Safety Analysis (DSA) for the LOW-Activity Waste Facility

DESCRIPTION OF CHANGE

calculation (24590-LAW-MPC-RLD-00001 Rev 2) reinstated the fluid properties that had been revised by calculation 24590-LAW-MPC-RLD-00001 Rev 1.

- The following EIEs were evaluated and it was determined that they impact the LAW RLD SDD (24590-LAW-3ZD-RLD-00001 Rev 2):
  - EIE 24590-WTP-EIE-MS-16-0003 Rev 0 – Updated sections 4.2.3.2 and 4.2.3.3
  - EIE 24590-WTP-EIE-MS-16-0010 Rev 0 – Updated section 4.2.3.3
  - EIE 24590-LAW-EIE-MS-17-0026 Rev 0 – Updated Sections 4.2.3.1, 4.2.3.2, 4.2.3.3, and 5.2.
  - EIE 24590-LAW-EIE-PE-17-0004 Rev 0 – Updated Sections 4.2.3.1, 4.2.3.3, and 5.2.
  - EIE 24590-WTP-EIE-P-18-0001 Rev 0 - Updated Figures 2-1, 2-3, and Table 2-2 to add Process Service Water (PSW) as a system that interfaces with the LAW RLD system (The PSW is used a source of water for the RLD P-Trap Primer). In addition, section 4.1.6.1 was updated to add a description RLD P-trap on the LAW HVAC fan coil unit condensate lines, and PSW was included in Section 1.5.2, *System Designators*.
  - EIE 24590-WTP-EIE-PR-17-0001 Rev 0 - Section 3.4.1.2.2 was updated to reference the correct *process inputs basis of design document* (24590-WTP-DB-PET-17-001) for the RLD streams RLD21 to RLD 35. Section 5.2 was also update with the correct *process inputs basis of design*.
  - EIE 24590-LAW-EIE-J-17-0016 Rev 0 – Section 4.3.3.1 was added to capture the frequency of testing of safety instrument function during plant operation to maintain safety integrity, and calculation 24590-LAW-U3C-PPJ-00017 was added to section 5.2.
  - EIE 24590-WTP-EIE-SYSE-16-0085 Rev 0– Section 3.4.2.1.4 was updated to incorporate changes from document 24590-WTP-SRDCN-ENG-16-00022

See edits in Attachment A below. Underlined text is added; ~~strikethrough~~ text is deleted.

ORIGINATOR	CHECKER
Claude Kabera – Systems Engineering	Wayne Sexton

NSE has no further comments – all previous NSE comments provided are resolved; the LAW DSA requirements are correct. The subject SDD does not need SE documentation as the SDD is a precursor/preliminary document to the actual design change. N/A- 10 item 2 and N/A-08.

Reviewed No Comments
By: Kraig Wendt - kmwendt
Org Name: BNI
Placed: Jun 13, 2018

	Organization/Area of Responsibility	Print/Type Name	Signature	Date
Validation:	See Attached Nuclear Safety Engineering	Rob Birchenough		
Concurrence:	Manager of Production Engineering and Design Authority	Ian Milgate		6/19/18
Concurrence:	N/A	N/A		
Approval:	Systems Engineering Manager	Sarah Barker		6·19·18

Validation

Signatures below indicate acceptance of the requirements established in Section 3 as the complete and correct set of requirements for the system relative to the requirements sources for which the Requirement Developer is responsible.

Appl.	Requirement Area	Requirement Developer	Signature	Date
☐	Architectural Design			
☐	Civil/Structural Design			
☐	Controls & Instrumentation Design			
☑	Electrical Design & AHJ	Scott Goad	per email	
☐	Fire Protection Engineering			
☐	HVAC Design			
☐	Mechanical Handling Design			
☐	Mechanical Systems Design			
☐	Plant Design			
☐	Process Engineering			
☐	Interface (External)			
☐	Interface (Internal)			
☐	System Functions and Requirements			
☐	Equipment Environmental Qualification			
☐	Materials Engineering / Technology			
☐	Plant Software Design			
☐	Environmental Permitting (ESH)			
☑	Nuclear Safety Engineering	Kraig Wendt	see page 2 of 2	
☐	Criticality Safety			
☐	Radiological Engineering			
☐	Industrial Safety/Hygiene (ESH)			
☐	Mission (WTP Contract functional/ performance rqmts)			
☐	Operations Requirements Document (Plant Ops)			
☐	Quality Assurance			
☐	Safeguards & Security			
☐	Startup			
☐	Transportation & Logistics			

* Validation not required for alpha/preliminary design description documents.

1.5.1 Acronyms

ALARA	as low as reasonably achievable
BOD	Basis of Design
CCTV	closed circuit television
CTN	component tag number
DFLAW	Direct Feed Low-Activity Waste
DOE	US Department of Energy
DSA	documented safety analysis
DWP	Dangerous Waste Permit
Ecology	Washington State Dept. of Ecology
EM or EMF	effluent management (facility)
FDD	facility design description
GTC	general test criteria
HVAC	heating, ventilation, and air conditioning
HEPA	high efficiency particulate air (filter)
ILAW	immobilized low-activity waste
IQRPE	independent, qualified, registered, professional engineer
LAW	Low-Activity Waste (Facility)
LERF/ETF	Liquid Effluent Retention Facility/Effluent Treatment Facility
M&TE	measuring and testing equipment
ORD	Operations Requirements Document
PAM	post accident monitoring
P&ID	*piping and instrumentation diagram*
~~PDSA~~	~~*preliminary documented safety analysis*~~
PT	Pretreatment (Facility)
S&AP	Sampling and Analysis Plan
SBS	submerged bed scrubber
SC	seismic category
SDD	system design description
SIF	Safety Instrumented Functions
SRD	Safety Requirements Document
SS	safety significant
SSC	structures, systems, or components
TAC	test acceptance criteria
WAC	Washington (State) Administrative Code
WESP	wet electrostatic precipitator
WTP	Hanford Tank Waste Treatment and Immobilization Plant

1.5.2 System Designators

ASX	autosampling system
C3V	C3 ventilation system
C5V	C5 ventilation system
DEP	DFLAW EMF Process System
DIW	demineralized water system
ISA	instrument service air system
LCP	LAW concentrate receipt process system
LFP	LAW melter feed process system
LMP	LAW melter process system
LOP	LAW primary offgas process system
LVE	low voltage electrical system (480/208/120V)
LVP	LAW secondary offgas/vessel vent process system
NLD	non-radioactive liquid waste disposal system
PCJ	process control system
PPJ	programmable protection system
PSA	plant service air system
PSW	process service water system
PWD	plant wash and disposal system
RLD	radioactive liquid waste disposal system
RWH	radioactive solid waste handling system
SHR	sodium hydroxide reagent system
TLP	treated LAW evaporation process system

Figure 2-1 LAW Facility Radioactive Liquid Waste Disposal System Context Diagram

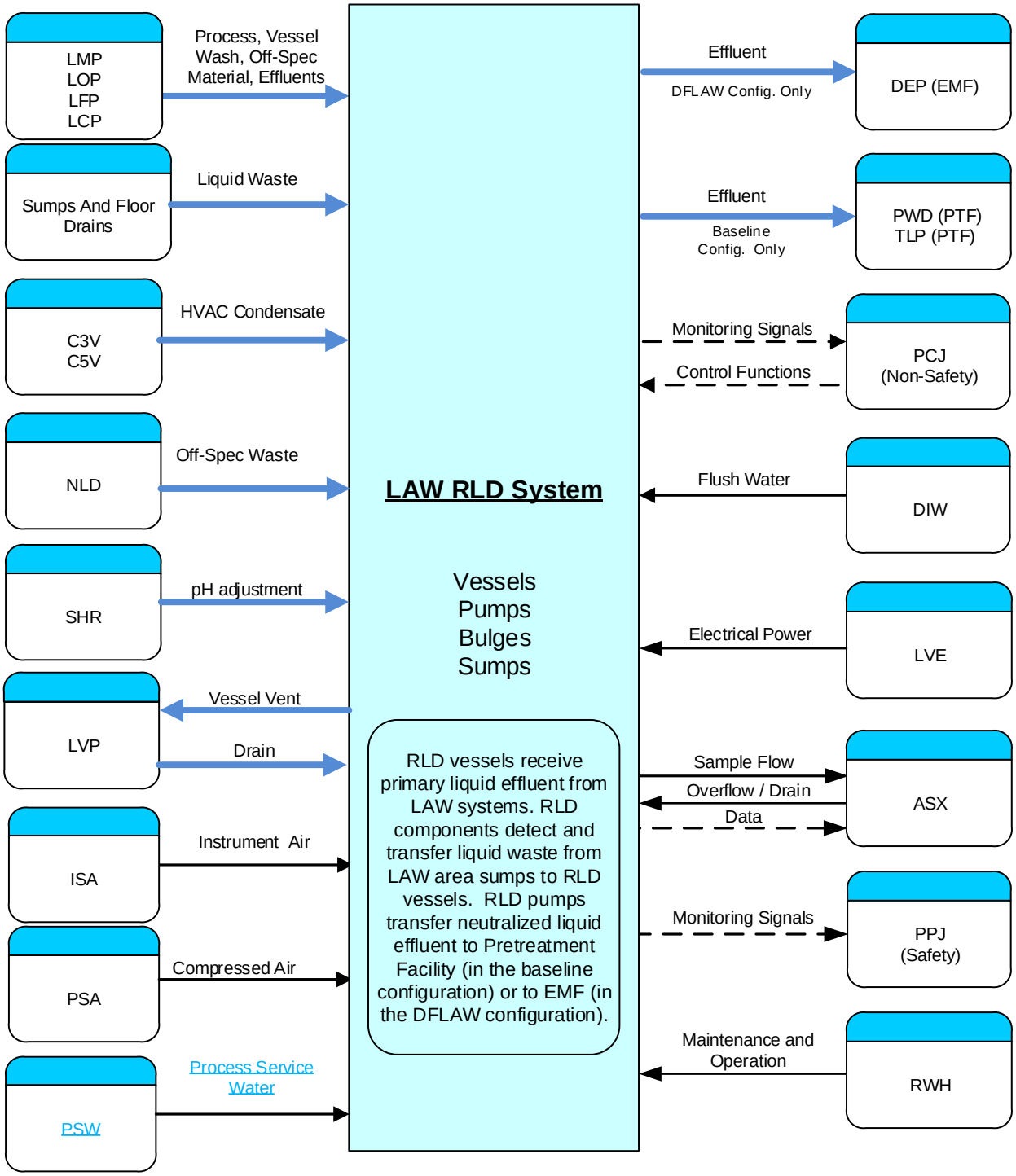

Figure 2-3 LAW Facility RLD System Functional Block Diagram

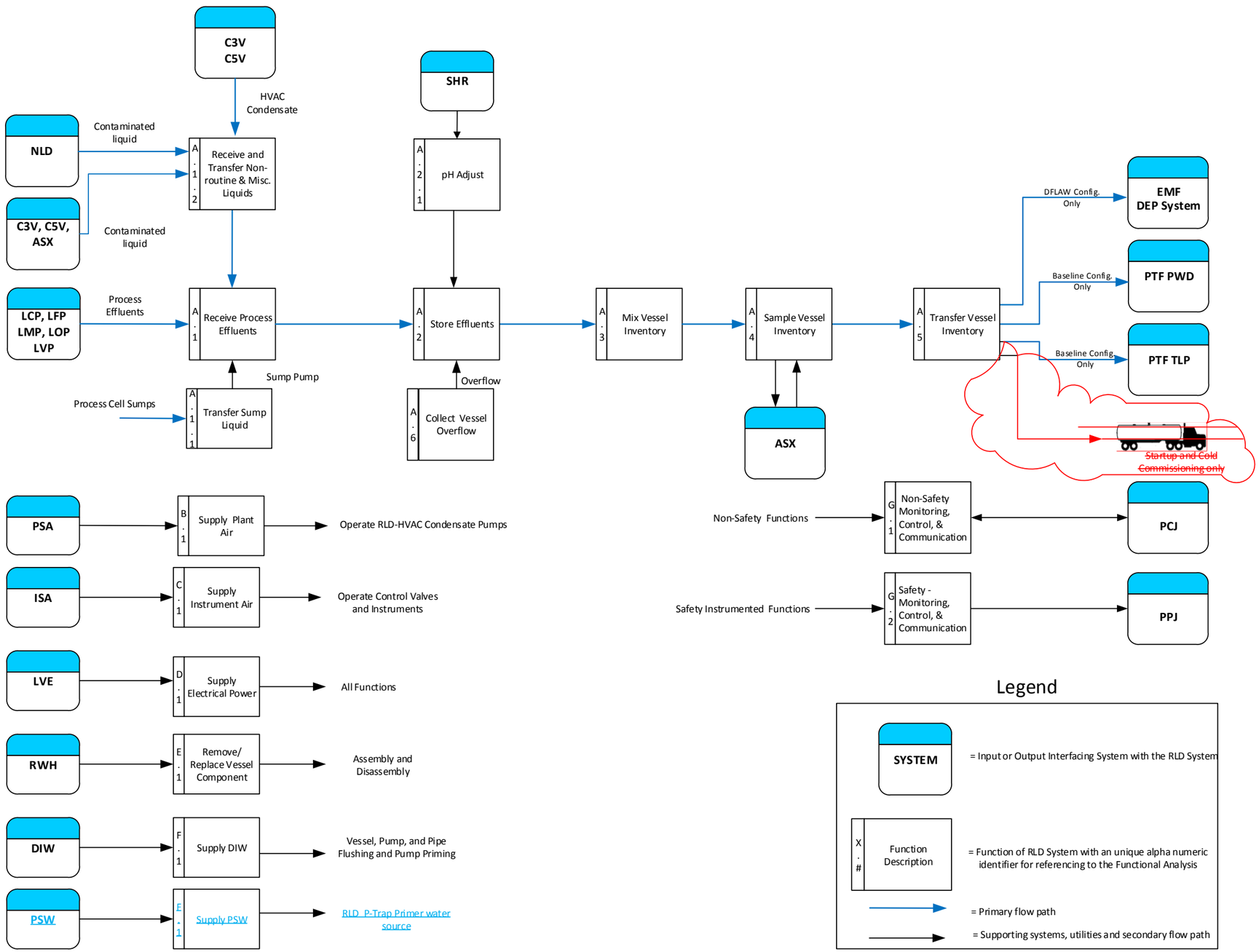

Table 2-2 LAW RLD Interface Boundaries

System Locator	System Interface	System Boundary
PSA	1. Supplies plant air (motive air) to RLD-PMP-00196, -00197, -00198, -00199, -00200, -00201, and -00202 2. Supplies plant air for purging RLD-VSL-00004.	1. Isolation valve upstream of PCV on supply lines to RLD HVAC condensate pumps (24590-LAW-M6-RLD-4002/4003) 2. Isolation valve RLD-V-35543 on purge air supply line to RLD vessel (24590-LAW-M6-RLD-00002001)
PSW	Provides water source for the RLD system P-traps, located near FCUs C3V-FCU-00018, C3V-FCU-00020, C3V-FCU-00031, C3V-FCU-00033, C3V-FCU-00055, and C3V-FCU-00056,	Connections to RLD drains from C3V-FCU-00018, C3V-FCU-00020, C3V-FCU-00031, C3V-FCU-00033, C3V-FCU-00055, and C3V-FCU-00056 (24590-WTP-FC-P-18-0010).
RWH	The LAW process area bridge crane (RWH-CRN-00008) provides crane coverage to remove and replace pumps and agitators from RLD-VSL-00003/-00005 within the effluent cell as needed during maintenance operations and places them in dedicated areas for repair and maintenance.	Pump and agitator lifting lugs

3.4.1.2.2 Materials of Construction and Erosion/Corrosion Design Parameters

Requirement: The LAW Facility RLD system shall be designed to include allowance for erosion/corrosion and use of materials of construction for the fluid service conditions in order to meet the life expectancy that is identified in Section 3.4.1.2.1 of this SDD. Equipment and facilities are constructed, where possible, from materials amenable to volume reduction and eventual disposal. [Sections 6.7.4, 11.8.3, 11.9, BOD] [Appendix H, Section 5, SRD]

Basis Discussion: LAW Facility RLD maintains confinement/containment of the excess ILAW production effluent byproduct. This LAW effluent, which may contain other chemicals, may be erosive and/or corrosive in nature to certain materials. Erosion/corrosion material allowances are defined so that confinement/containment is maintained by the selected materials. Applicable materials of construction are limited to those components that come into contact with the fluids. Selected materials for the LAW Facility RLD system equipment and components should be selected based on the stream data presented in the process corrosion data sheet reports. (24590-WTP-RPT-PR-04-0001-02, *WTP Process Corrosion Data - Volume 2*, and 24590-WTP-RPT-PR-04-0001-04, *WTP Process Corrosion Data - Volume 4*)

Details of the allowed materials and corrosion allowances are found in:

1. 24590-LAW-N1D-RLD-00001, RLD-VSL-00004 (LAW) – C3/C5 Drains/Sump Collection Vessel
2. 24590-LAW-N1D-RLD-00002, RLD-VSL-00005 (LAW) – SBS Condensate Collection Vessel
3. 24590-LAW-N1D-RLD-00004, Corrosion Evaluation RLD-PMP-00001A/B (LAW)
4. 24590-LAW-N1D-RLD-00005, RLD-VSL-00003 (LAW) – Plant Wash Vessel
5. 24590-LAW-N1D-RLD-00007, RLD-PMP-00002A/B (LAW) – C3/C5 Drains/Sump Collection Transfer Pump

If vessel washing via internal spray mechanisms is needed to prevent or minimize corrosion, the operational limitation should be identified in the vessel corrosion evaluation. ~~Refer to Appendix B, Tables B-25 and B- 26~~ Refer to Appendix A, pages A-43 through A-49 (Streams RLD21 to RLD35);

~~24590-WTP-DB-PET-09-001~~24590-WTP-DB-PET-17-001, *Process Inputs Basis of Design (PIBOD) for LAW and EMF*; and 24590-WTP-M4C-V11T-00021~~1~~4, *WTP Process Flowsheet Mass & Energy Balance Analysis for Input to Material Selection Assessments*, for the fluid characteristics of the process streams.

Verification: Verification is expected to be achieved through the following:

Verif. Method	Verif. By	Plan	Notes/Comments
A/I	**ENG**	Perform an analysis/inspection of materials used in the LAW RLD system which are in contact with, and are required to maintain confinement or containment of, the process fluids to verify that they are acceptable for use in the operating environment and have adequate erosion and corrosion allowances.	
R	**ENG**	Review design components used in the LAW RLD system which are in contact with, and are required to maintain confinement or containment of, the process fluids to verify concurrence with analysis.	

3.4.2.1.1 Seismic Design

Requirement: The LAW Facility RLD system safety equipment, including PAM, shall be designed and qualified for seismic conditions and perform their safety function under design basis seismic loads in accordance with Table 3-1 below. [Safety Criterion 4.1-3, SRD] [Sections 4.4.4.1.23.3, 4.4.4.1.23.4, Appendix A Table A-1, LAW DSA] ~~[Table 3A-7, PDSA – LAW Facility]~~

Table 3-1 LAW Facility RLD System Seismic Design Categories

Description	Seismic Category	Reference
~~Level detector, high level switch, and connector piping for the process cells and effluent cell sumps (L-0123, L-0124, L-0125, and L-0126)~~ Process and Effluent Cells Level Interlocks (Not associated with Dangerous Waste Permit process and effluent cell sump level detection instruments)	SC-III	Sections, 4.4.4.1.23.3, 4.4.4.1.23.4, Appendix A Table A-1, LAW DSA ~~Table 3A-7, PDSA – LAW Facility~~
PAM instruments	Seismic category designations per PAM report*	Safety Criterion 4.1-3, SRD

* 24590-LAW-RPT-ENS-12-001, *LAW Post Accident Monitoring Report*

Basis Discussion: ~~24590-WTP-PSAR-ESH-01-002-01, *Preliminary Documented Safety Analysis to Support Construction Authorization*; *General Information*, states "All components and parts of the equipment that provide or contribute to the safety functions and accident monitoring functions, including equipment supports and anchorage, shall be qualified accordingly." This qualification ensures SSCs meet the designated seismic design requirements.~~ Safety Criterion 4.1-3 in the safety requirements document (SRD) details the equivalence of the WTP seismic category to the seismic performance category of DOE-STD-1020-94, *Natural Phenomena Hazards Design and Evaluation Criterial for Department of Energy Facilities*. The SRD also states that SSCs designated as safety SSCs be designed to withstand the effects of natural phenomena hazard events (e.g., earthquakes, wind, and floods) without loss of capability to perform specified safety functions.

Verification: Verification is expected to be achieved through the following:

Verif. Method	Verif. By	Plan	Notes/Comments
A/T	**ENG**	Perform analysis or testing on equipment listed in Table 3-1 to demonstrate capability to withstand seismic event.	~~This is expected to be documented in the equipment qualification packages.~~
R	**ENG**	Review design to verify conformance to the results of the analysis requirements and to verify that the safety function, as established in the LAW ~~P~~DSA is correctly reflected in the design ~~equipment qualification~~ documents.	~~May be accomplished by equipment qualification packages or separate assessment.~~

3.4.2.1.2 Seismic Design for Interaction Effects

Requirement: The permanently mounted SSCs, at a minimum, shall be designated SC-IV. Interaction effects shall be considered when determining the seismic category of individual items and, where an adverse seismic interaction with safety class (SC) or safety significant (SS) equipment exists, adequate measures shall be taken to preclude the adverse interaction. [Criterion 4.1-3, SRD]

Basis Discussion: Equipment that is non-safety may be identified as having a potential for adverse interaction with safety equipment during a seismic event in accordance with 24590-WTP-GPG-ENG-033, *Evaluation for Seismic Interaction Effects*. Where a resolution strategy is selected to increase the seismic category of the non-safety (source) SSC to protect the safety (target) SSC, the resulting seismic category of the equipment may be greater than SC-IV. In those cases, the equipment design is verified to meet the higher seismic performance category such that the target SSC is protected.

~~Based on 24590-WTP-PSAR-ESH-01-002-01, *Preliminary Documented Safety Analysis to Support Construction Authorization; General Information*, SC-IV piping are categorized as follows: i) non-safety piping and without an inventory of radioactive or hazardous material, but require seismic protection. ii) safety piping, but without seismic safety function.~~ SC-IV includes non-safety SSCs that required seismic protection per the Uniform Building Code (UBC).

~~As discussed in 24590-WTP-PSAR-ESH-01-002-01, *Preliminary Documented Safety Analysis to Support Construction Authorization; General Information*, SC-V piping does not require any seismic consideration.~~ SC-V items include lockers, bicycles racks, desks, etc. per 24590-WTP-GPG-M-036, *Determining Quality Level and Seismic Category Classification of Sub-Components, Assemblies, Sub-Assemblies, and Parts.*

Verification: Verification is expected to be achieved through the following:

Verif. Method	Verif. By	Plan	Notes/Comments
R	**ENG**	Review the LAW RLD system to verify seismic categorization of equipment based on interaction effects per 24590-WTP-GPG-ENG-033, *Evaluation for Seismic Interaction Effects*.	
A/T	**ENG/ SUP**	Perform analysis or supplier testing on SSCs to demonstrate the ability to withstand the seismic loadings for their respective seismic categories to the extent necessary to prevent interactions.	~~Documented in an equipment seismic qualification review or supplier seismic design report.~~
R	**ENG**	Review design to verify conformance to the as-analyzed/as-tested configuration.	

3.4.2.1.3 LAW Facility RLD Safety Classifications

Requirement: The LAW Facility RLD SSCs listed in Table 3-2 below shall be classified as SS SSCs. [Sections 4.1-2, 4.4-1, SRD] ~~[Section 4.4.29.1, Table 4A-1, PDSA – LAW Facility]~~ [Section 4.4.4.1.23.1, Appendix A Table A-1, LAW DSA]

Table 3-2 LAW Facility RLD SS SSCs

Equipment/Component Description	Safety Function	Safety Classification	Reference
~~Level detector, high level switch, and connector piping for the process/effluent cell sumps (L-0123, L-0124, L-0125, and L-0126)~~ Process and Effluent Cells Level Interlock	The Interlocks reduce the probability of a release of radioactive and chemically hazardous material by preventing a process or effluent cell floor collapse caused by room flooding. ~~Provide liquid level detection in the process and effluent cell sumps during normal operations and during seismic events of intensity up to and including the design basis earthquake~~	SS	Section 4.4.4.1.23.1, Appendix A Table A-1, LAW DSA ~~Appendix C, Table C4-1, PDSA – LAW Facility~~

Basis Discussion: Items are classified SS to protect workers, public, and the environment.

Verification: Verification is expected to be achieved through the following:

Verif. Method	Verif. By	Plan	Notes/Comments
R	**ENG**	Review design to verify safety function, as established in the LAW ~~P~~DSA is correctly reflected in the LAW RLD system.	Document in the design verification report.

3.4.2.1.4 Room Environment Conditions for SSCs

Requirement: The system equipment in the LAW Facility RLD system credited with any safety function(s) ~~and PAM instruments shall be designed~~ and qualified to perform their safety~~/PAM~~ function(s) as intended in the environment conditions associated with the events for which they are intended to respond~~, inclusive of aging effects, throughout their qualified life~~. Safety structures, systems, and components designated as Safety Class or Safety Significant shall be designed and qualified to function as intended in the environments associated with the events for which they are intended to respond. Environmental qualification shall be to IEEE 323-83. The effects of aging on normal and abnormal functioning shall be considered in design and qualification using IEEE 323-83. For LBL Facilities only SS SSCs required to operate in harsh environments and credited for radiological and/or chemical hazards require qualification to IEEE 323-83. [Safety Criterion 4.1-3, 4.4-1, SRD] [Section 11.7.3, BOD]

Basis Discussion: SSCs classified as SC and SS are designed and qualified to perform their safety function(s). The effects of aging on normal and abnormal functioning are considered in design and qualification. 24590-LAW-U0D-W16T-00001, *LAW Room Environment Data Sheet*, identifies environmental conditions and service conditions for rooms that house safety SSCs.

Refer to 24590-LAW-RPT-ENS-12-001, *LAW Post Accident Monitoring Report* for PAM designated items.

Verification: Verification is expected to be achieved through the following:

Verif. Method	Verif. By	Plan	Notes/Comments
A/T	**ENG**	Perform analysis or testing to verify the ability of the SSCs credited with a safety function ~~and post-accident monitoring~~ to withstand the environmental conditions for which they are intended to respond. ~~specified environmental conditions.~~	~~Document in equipment qualification package. See 24590-LAW-U0D-W16T-00001, *LAW Room Environment Data Sheet* for room environment conditions.~~
R	**ENG**	Review design to verify conformance to the as-analyzed/as-tested configuration.	~~Document in an assessment/evaluation or equipment qualification package.~~
R	**ENG**	Review the design to verify that SS SSCs required to operate in harsh environments are environmentally qualified to IEEE 323-83 inclusive of the effects of aging on normal and abnormal functioning.	

3.4.4.3 Valve Operation

Requirement: Remote operation shall be provided for routinely operated valves where accessibility is difficult. [Section 14.4, ORD]

1. Valves located in bulges or other remote locations shall be equipped with a highly reliable position indicator. Valve reach rods, if necessary, shall be designed to be removed easily and when reinstalled, only engage the valve in the correct alignment using no more than two universals.
2. When utilizing chain operators for remote operation of valves, the chain shall be 41"+/-7" above the floor. If the chain operators are in walkways, a provision shall be installed to stow the chain out of the walkways when not in use. The chain shall be stowed $\leq$ 72" above the floor.
3. Automatic valve operator closure design shall be sufficiently slow to prevent damage from water hammer.

Basis Discussion: Remote operation features ensure the WTP Facility design provides the ability to operate routinely operated valves without undue difficulty to the operators and reduces dose exposure to the worker. [ALARA]

Verification: Verification is expected to be achieved through the following:

Verif. Method	Verif. By	Plan	Notes/Comments
R	**ENG**	Review design to verify remote operation feature is provided for valves located in bulges or other remote locations.	
~~A/~~R	**ENG**	Review the design to verify the valve stroke time conforms to the results of fluid transient studies conducted for the WTP. ~~Perform an analysis/review to determine valve stroke time is sufficient to prevent water hammer.~~	
~~T~~	**~~SU/COM~~**	~~Perform a test to verify valve closure time meets the acceptance range to prevent water hammer.~~	

3.9.2.1 ~~Process/Effluent Cell Sump~~ Process and Effluent Cell Level Safety Significant Interlocks

Requirement: ~~The LAW Facility RLD system sump level interlocks shall monitor liquid levels in the process cell sump and effluent cell sump (L-0123, L-0124, L-0125, and L-0126). Upon detection of liquid levels in the process cell or effluent cell sumps, the interlocks shall isolate DIW system sources to the process cell, effluent cell, and charge floor. This requirement applies to the process and effluent cells listed in Table 3-3 below. [Appendix C, Table C4-1, PDSA – LAW Facility] (G.2).~~
Upon indication of high levels in the process or effluent cells (sensing elements identified in Table 3-3), the interlock shall isolate DIW water supply to the process and effluent cells, and the charge floor. The interlocks shall actuate to close DIW valves (final elements identified in Table 3-3) to prevent exceeding the design limit of 26 in. in a process cell or 56 in. in the effluent cell. [Sections 4.4.4.1.23.3, 4.4.4.1.23.4, Appendix A Table A-1, LAW DSA] (G.2)

Basis Discussion: The SS level interlock to the water lines in the effluent and process cells protects the facility and the workers by ensuring that water accumulation in the process cells from non-fire water system (DIW) is detected and halted to prevent unacceptable structural loading on the floor ~~and submergence of safety significant components~~. [ALARA]

Table 3-3 Process and Effluent Cells with SS High Level Interlock

Process Cells	~~Sensors~~ Sensing Elements	~~SS Valves~~ Final Elements	P&ID
Melter 1 Process cell L-0123	RLD-LE~~SHH~~-2322 RLD-LE~~SHH~~-2323	DIW-YV-2119 DIW-YV-2120	24590-LAW-M6-RLD-00003002 24590-LAW-M6-RLD-00003003 24590-LAW-M6LN-20-00006 24590-LAW-M6-DIW-00001001 24590-LAW-M6-DIW-00001002
Melter 2 Process cell L-0124	RLD-LE~~SHH~~-2324 RLD-LE~~SHH~~-2325		
Melter 3 Process cell L-0125 (not used)	RLD-LE~~SHH~~-2326 RLD-LE~~SHH~~-2327		
RLD Effluent cell L-0126	RLD-LE~~SHH~~-2328 RLD-LE~~SHH~~-2329		

Verification: Verification is expected to be achieved through the following:

Verif. Method	Verif. By	Plan	Notes/Comments
A	**ENG**	Perform an analysis to determine process cells liquid level detection for SS interlock.	Create / finalize appropriate analytical limits calculation.
R	**ENG**	Review design to verify incorporation of interlock.	
T	**SU/COM**	Perform a test to verify line isolation valves automatically close in response to SS interlock signal.	

Table 3-4 LAW Facility RLD System Applicable Codes & Standards

Implementing Codes and Standards: [24590-WTP-COR-MGT-15-00001, Rev 1, *Engineering, Procurement, and Construction (EPC) Code of Record*]	
WAC 173-303	*Washington Administrative Code - Dangerous Waste Regulations*
[1]The LAW ~~P~~DSA specifies that design of selected portions of the RLD system per this code or standard is a credited design feature to help ensure the robustness of the design in support of the nuclear safety hazards analysis and selection of controls. [2]This code or standard from the SRD applies to components of the RLD system that have a safety function.	

4.1.6.1 HVAC Condensate Pumping Traps

The majority of condensate from HVAC air conditioning units, cooling coils, and fan coil units drain to the air-driven HVAC condensate pumping traps at elevation −21 ft. Four of these pumps (RLD-PMP-00196, -00197, -00198, and -00199) lift the condensate to the floor drain header at elevation +3 ft on the south side. Two additional pumps (RLD-PMP-00200 and -00201) lift the condensate to the floor drain header at elevation +3 ft on the north side. These condensate pumps are depicted on 24590-LAW-M6-RLD-00004002, *P&ID – LAW Radioactive Liquid Waste Disposal System RLD HVAC Condensate Pumps* and -00004003, *P&ID – LAW Radioactive Liquid Waste Disposal System RLD HVAC Condensate Pumps*. HVAC condensate also drains to a HVAC condensate pumping trap (RLD-PMP-00202) at elevation +28 ft. This pump lifts the condensate to the floor drain header at elevation +48 ft and is depicted on 24590-LAW-M6-RLD-00005001, *P&ID – LAW Radioactive Liquid Waste Disposal System C3/C5 HVAC Pumps and Drains*. The floor drain headers that collect HVAC condensate from the pumps gravity drain to the C3/C5 drains/sump collection vessel (RLD-VSL-00004). P-traps are included as part of the RLD drains from C3V-FCU-00018, C3V-FCU-00020, C5V-CCL-00031, C3V-FCU-00033, C3V-FCU-00055, and C3V-FCU-00056 (24590-WTP-FC-P-18-0010). P-traps are intended to prevent potentially contaminated air from entering the drain lines from a C3 area and moving to a C2 area in the event the HVAC unit in the C3 area shuts down. The PSW is used a source of water for the RLD P-Trap Primer.

The HVAC cooling coils condensate pumps are SC-IV and safety classification non-safety.

4.2.3.1 C3/C5 Drains/Sump Collection System Operations

LAW-RLD-VSL-00004 should be operated on a 24-hour cycle.

Operations include:

1. Establish heel with fluid containing a chloride to hydroxide ratio [CL]/[OH] ratio of less than 2 at the first cycle start (prior to sodium hydroxide addition). Subsequent cycles require a heel. The heel is full at level L7. Sodium hydroxide is required to be added after a heel is

established (24590-LAW-M4C-V11T-00005)

2. Recirculate and mix C3/C5 drains/sump collection vessel contents
3. Recirculate sample stream to/from system ASX
4. Add caustic (5M NaOH) for pH adjustment of vessel contents
5. Vessel should be at a minimum ½ batch volume at time of transfer initiation to LAW-RLD-VSL-00005. Note this may be accomplished by adding water if necessary. Transfer is complete when vessel liquid level is at L7.
6. Transfer C3/C5 drains/sump collection vessel contents to SBS condensate collection vessel, if the C3/C5 drains/sump collection vessel content is at a fluid temperature of less than 150°F (24590-LAW-MEC-RLD-00001)
7. Intermittent mixing through educators during addition is required

Infrequent operations include:

1. Transfer C3/C5 drains/sump collection vessel contents to plant wash vessel, if the C3/C5 drains/sump collection vessel content is at a fluid temperature of less than 150°F (24590-LAW-MEC-RLD-00001).
2. Add demineralized water (via internal water spray nozzles) to dilute vessel contents
3. Rinse C3/C5 drains/sump collection vessel (internal water spray nozzles)
4. Rinse C3/C5 bulge (internal water spray nozzles)
5. Rinse C3/C5 drains collection cell (cell water spray nozzles)

4.2.3.2 Plant Wash Collection System Operations

Operations include:

1. Mix plant wash vessel contents
2. Recirculate sample stream to/from the ASX system. (This operation requires simultaneous plant wash vessel recirculation to ensure the pump operates above its minimum allowable flow of 100 gpm).
3. Transfer plant wash vessel contents to EMF evaporator feed vessel, if the plant wash vessel content is at a fluid temperature of less than 150°F (24590-LAW-MEC-RLD-00001). (DFLAW configuration only)
4. Flush transfer line to EMF evaporator feed vessel (DFLAW configuration only)
5. Transfer plant wash vessel contents to PT Facility plant wash vessel~~.~~ , if the plant wash vessel content is at a fluid temperature of less than 150°F (24590-LAW-MEC-RLD-00001). Cavitation may occur if fluid temperature is above 162°F. (baseline configuration only)
6. Flush transfer line to PT Facility plant wash vessel (baseline configuration only)

Infrequent operations include:

1. Transfer plant wash vessel contents to SBS condensate collection vessel, if the plant wash vessel content is at a fluid temperature of less than 150°F (24590-LAW-MEC-RLD-00001). (This operation requires simultaneous sample recirculation to ASX to ensure the pump operates above its minimum allowable flow of 100 gpm)
2. Transfer plant wash vessel contents to PT Facility SBS condensate receipt vessel, if the plant wash vessel content is at a fluid temperature of less than 150°F (24590-LAW-MEC-RLD-00001) (baseline configuration only)
3. Add demineralized water (via internal water spray nozzles) to dilute vessel contents

4. Rinse plant wash vessel (internal water wash nozzles)
5. Rinse bulge (internal water wash nozzles)
6. Intermittent mixing through educators during addition is required

4.2.3.3 SBS Condensate Collection System Operations

Operations include:

1. Initiation of a transfer from the LAW-RLD-VSL-00005 starts the LAW-RLD-VSL-00005 cycle. The LAW -RLD-VSL-00005 can receive SBS condensate for the remaining time.
2. Mix SBS condensate collection vessel contents. Intermittent mixing through educators during addition is required.
3. Recirculate sample stream to/from system ASX (This operation requires simultaneous SBS condensate collection vessel recirculation to ensure the pump operates above its minimum allowable flow of 100 gpm)
4. Transfer SBS condensate collection vessel contents to EMF evaporator feed vessel, if the SBS condensate collection vessel content is at a fluid temperature of less than 150°F (24590-LAW-MEC-RLD-00001). (DFLAW configuration only)
5. Flush transfer line to EMF evaporator feed vessel (DFLAW configuration only)
6. Transfer SBS condensate collection vessel contents to PT Facility SBS condensate receipt vessel~~.~~, if the SBS condensate collection vessel content is at a fluid temperature of less than 150°F (24590-LAW-MEC-RLD-00001). Cavitation may occur if the fluid temperature is above 161°F. (baseline configuration only)
7. Flush transfer line to PT Facility SBS condensate receipt vessel (baseline configuration only)
8. Simultaneous operator initiated pump transfers to RLD-VSL-00005 from two or more of the following vessels: LOP-SCB-00001, LOP-SCB-00002, RLD-VSL-00003, or RLD-VSL-00004 must not occur (RLD-VSL-00003 does not transfer to RLD-VSL-00005). This operational constraint is in place to prevent the potential overfilling of RLD-VSL-00005 during normal operation.

Infrequent operations include:

1. Transfer SBS condensate collection vessel contents to LAW plant wash vessel, if the SBS condensate collection vessel content is at a fluid temperature of less than 150°F (24590-LAW-MEC-RLD-00001). (This operation requires simultaneous sample recirculation to ASX to ensure the pump operates above its minimum allowable flow of 100 gpm)
2. Transfer SBS condensate collection vessel contents to PT Facility plant wash vessel, if the SBS condensate collection vessel content is at a fluid temperature of less than 150°F (24590-LAW-MEC-RLD-00001). (baseline configuration only)
3. Add demineralized water (via internal water spray nozzles) to dilute vessel contents
4. Rinse SBS condensate collection vessel (internal water wash nozzles)
5. Rinse plant wash/SBS bulge (internal water wash nozzles)

4.3.3.1 Safety Instrumented Functions (SIF) Testing Intervals

Confirmation of the Probability of Failure on Demand (PFD) calculations (referenced below) remain true when the operational requirements of full functional testing of the Safety Instrumented Functions (SIF) are met in the intervals defined below:

Table 4-7 – SIF Periodic Testing Requirements

SIF Cases	Components included in the test	Full Functional Testing Interval [In YEARS – unless otherwise noted]	Ref.
LAW Process Cell L-0123 Flood Detection Interlock	- RLD-LE-2322 - RLD-LSHH-2322 - RLD-LE-2323 - RLD-LSHH-2323 - PPJ-CNTRL-2000 - DIW-YV-2119 (DIW-YY-2119) - DIW-YV-2120 (DIW-YY-2120)	1	24590-LAW-U3C-PPJ-00017
LAW Process Cell L-0124 Flood Detection Interlock	- RLD-LE-2324 - RLD-LSHH-2324 - RLD-LE-2325 - RLD-LSHH-2325 - PPJ-CNTRL-2000 - DIW-YV-2119 (DIW-YY-2119) - DIW-YV-2120 (DIW-YY-2120)	1	24590-LAW-U3C-PPJ-00017
LAW Process Cell L-0126 Flood Detection Interlock	- RLD-LE-2328 - RLD-LSHH-2328 - RLD-LE-2329 - RLD-LSHH-2329 - PPJ-CNTRL-2000 - DIW-YV-2119 (DIW-YY-2119) - DIW-YV-2120 (DIW-YY-2120)	1	24590-LAW-U3C-PPJ-00017
LAW Process Cell L-0125 Flood Detection Interlock	- RLD-LE-2326 - RLD-LSHH-2326 - RLD-LE-2327 - RLD-LSHH-2327 - PPJ-CNTRL-2000 - DIW-YV-2119 (DIW-YY-2119) - DIW-YV-2120 (DIW-YY-2120)	1	24590-LAW-U3C-PPJ-00017
Valves	- PPJ-HS-90004 - DIW-HS-2119 - DIW-HS-2120 - PPJ-CNTRL-2000 - DIW-YV-2119 (DIW-YY-2119) - DIW-YV-2120 (DIW-YY-2120)	0.25	24590-LAW-U3C-PPJ-00017

Table 4-8~~7~~ Level 1 & 2 Programmatic (Non-Design) LAW Facility RLD System Requirements

Section #	Section 3 Requirement Ref. (or NA)	Requirement Source	Requirement	Document in which Implemented. (TBD until document developed)
WTP Contract				
1.1	There are no WTP Contract programmatic requirements applicable to the LAW Facility RLD system.			
~~**Nuclear Safety (e.g. TSRs; SACs)**~~				
~~**2.1**~~	~~3.4.2.1.1, 3.4.2.1.3~~	~~Section 5.5.23, 24590-WTP-PSAR-ESH-01-002-03~~	• ~~High-level detection instrumentation loop must be periodically calibrated.~~ • ~~High-level interlocks to the isolation valves must be periodically functionally checked.~~ • ~~Isolation valve actuators on the non-firewater lines must be periodically functionally checked.~~	~~TBD~~
~~**2.2**~~	~~N/A~~	~~Table C4-2, 24590-PSAR-ESH-01-002-03~~	~~SAC: LAW Facility RLD Waste Inventory Control limits process waste transfers to LAW Facility RLD vessels to ensure hydrogen generation will not result in an lower flammability limit (LFL) condition or that the waste will be transferred out before an LFL concentration can occur.~~	~~TBD~~
Environmental Permit Conditions				
3.1	3.4.2.3.2	WAC 173-303-640 [3] DWP III.10.E.9.c.vii	• Specify the handling or installation procedures to protect the integrity of the tank system. The procedures should prevent or detect the following defects: ○ weld breaks (WAC 173-303-640 [3][c][i]) ○ punctures (WAC 173-303-640 [3][c][ii]) ○ scrapes of protective coatings (WAC 173-303-640 [3][c][iii]) ○ cracks (WAC 173-303-640 [3][c][iv]) ○ corrosion (WAC 173-303-640 [3][c][v]) ○ other structural damage or inadequate construction or installation (WAC 173-303-640[3][c][vi]) • Specify and document the remedies for any handling or installation procedure	TBD

Section #	Section 3 Requirement Ref. (or NA)	Requirement Source	Requirement	Document in which Implemented. (TBD until document developed)
			discrepancies identified before the tank system is covered, enclosed, or placed in use. (WAC 173-303-640[3][c]) • Specify that all tank system components be tested for tightness prior to being covered, enclosed, or placed in use. (WAC 173-303-640[3][e]) • Specify that the proper installation of the tank system and system components including corrosion protection systems be documented and certified by experts (that is, an independent qualified installation inspector, or an independent registered professional engineer trained and experienced in tank installation) in such system installations. (WAC 173-303-640[3][g])	
3.2	3.4.2.3.2	WAC 173-303-640[10]	Provide the means to ensure that waste is not placed into a tank that has contained incompatible waste until the tank has been decontaminated. (WAC 173-303-640[10])	TBD
3.3	N/A	WAC 173-303-640(4)(c)(iv)	Remove spills, leaks, or accumulated liquid from the secondary containment system within 24 hours or in as timely a manner as possible (Note: Ecology must be notified if the releases or accumulated liquid cannot be accomplished within 24 hours) (WAC 173-303-640[4][c][iv])	TBD
3.4	3.4.2.3.7	WAC 173-303-640 DWP III.10.E.6.a DWP III.10.E.5.i	• Inspect aboveground portions of the tank systems for corrosion (WAC 173-303-640[6][b][i]) • Review data gathered from leak detection equipment (for example, leak detection, level detection, pressure or temperature gauges, monitoring wells) to ensure proper system operation (WAC 173-303-640[6][b][ii]) • Inspect the construction materials and the area immediately surrounding the externally-accessible portion of the tank system, including the secondary containment to detect erosion or signs of releases of waste (WAC 173-303-640[6][b][iii]) • Daily inspection of tank systems for areas	TBD

Section #	Section 3 Requirement Ref. (or NA)	Requirement Source	Requirement	Document in which Implemented. (TBD until document developed)
			without secondary containment (WAC 173-303-640[4][f]) • Inspect the cathodic protection system, if present, according to the following schedule (WAC 173-303-640[6][c]) ○ Perform inspections within six months after initial installation and annually thereafter (WAC 173-303-640[6][c][i]) ○ Impressed current systems inspected and/or tested every other month (WAC 173-303-640[6][c][ii])	
Other				
~~4.1~~	~~N/A~~	~~24590-WTP-ICD-MG-01-005~~	~~If BOF transfer is not on-line, NLD effluents shall be trucked to the Treated Effluent Disposal Facility.~~	~~TBD~~

Note: TSR – Technical Safety Requirement SAC – Special Administrative Control

5.1 Source/Basis References

Document Number	Title	Text Reference
24590-WTP-DB-ENG-01-001	*Basis of Design*	BOD
24590-LAW-DSA-NS-18-0001 ~~24590-WTP-PSAR-ESH-01-002-03~~	*Documented Safety Analysis for Low-Activity Waste Facility* ~~*Preliminary Documented Safety Analysis to Support Construction Authorization; LAW Facility Specific Information*~~	LAW DSA ~~LAW PDSA~~
24590-WTP-RPT-OP-01-001	*Operations Requirements Document*	ORD
24590-WTP-SRD-ESH-01-001-02	*Safety Requirements Document, Volume II*	SRD
WA7890008967	*Dangerous Waste Portion of the Hanford Facility Resource Conservation and Recovery Act permit for the Treatment, Storage, and Disposal of Dangerous Waste (Hanford Facility RCRA Permit - Dangerous Waste Portion)*	DWP

5.2 Other References

Document Number	Title
24590-LAW-M4C-V11T-00005	*Sodium Hydroxide Additions to LAW RLD System*
24590-LAW-M6C-20-00007	*LAW Valve Cycling Transient Loads*

Document Number	Title
24590-LAW-MEC-RLD-00001	*Design Pressure and Design Temperature for RLD System*
24590-LAW-UEC-PPJ-00017	*PFD Calculation for LAW Process and Effluent Cells Flood Detection Interlocks*
~~24590-WTP-DB-PET-09-001~~	~~*Process Inputs Basis of Design (PIBOD)*~~
24590-WTP-DB-PET-17-001	*Process Inputs Basis of Design (PIBOD) for LAW and EMF*

Appendix A Test Objectives, Conditions, and Acceptance Criteria

NOTE: The testing activities included in this Appendix are limited to those identified as needing to be performed by Startup and Commissioning to support the verification of requirements in Section 3. This Appendix does not restrict Startup or Commissioning from performing other routing system functional testing or grooming.

Requirement (para #)	Plan (including SSCs)	Acceptance Criteria (TAC or GTC)*	Notes/Comments	Test Conditions
~~3.4.4.3~~ ~~Remote Valve Operation~~	~~Verify automatic valve closure time meets the acceptance range to prevent water hammer~~	~~**(GTC):** Upon actuation, valve closure is a minimum of time established based on a valve's nominal diameter. 2 seconds per inch of pipe diameter.~~	~~Use closure criteria as established in 24590 LAW-M6C-20-00007.~~ ~~1. Command close the actuated valve from the ICN~~ ~~2. Time how long it takes the valve to close from the instant the close command is given.~~ ~~3. Closure time measured must exceed minimum closure time.~~ ~~4. Stop testing if any unusual/unexpected noise or vibration occurs.~~ ~~5. Closure time is based upon 2 seconds per inch of pipe diameter.~~ ~~6. Test under design basis flow conditions.~~	~~1. Automatic valve controls set to manual mode.~~ ~~2. Automatic valve in fully open position before start of test.~~

Requirement (para #)	Plan (including SSCs)	Acceptance Criteria (TAC or GTC)*	Notes/Comments	Test Conditions

3.9.2.1
 	
Process Cell Sump Safety Significant Interlock
	Perform integrated test with the LAW-RLD, DIW, and PCJ systems to:
	• Verify interlock and alarm capability for each designated LAW cell flooding detector.
	• Verify DIW line isolation valves automatically close in response to safety significant interlock signal and the system annunciates an alarm at the following established setpoints ~~(TBD).~~:
	  ○ For room L-0123 setpoint ≤ 23.35 inches
	  ○ For room L-0124 setpoint ≤ 23.35 inches
	  ○ For room L-0125 setpoint ≤ 24.43 inches
	  ○ For room L-0126 setpoint ≤ 51.96 inches
	
	CTNs:
	Function
	Process Cell L-0123 Flooding Interlock
	Process Cell L-0124 Flooding Interlock
	~~Process~~ Effluent Cell L-0126 Flooding Interlock
	Process Cell L-0125 Flooding Interlock
	
	~~**Sensors**~~ **Sensing Elements**
	RLD-LE~~SHH~~-2322 (Cell L-0123)
	RLD-LE~~SHH~~-2323 (Cell L-0123)
	RLD-LE~~SHH~~-2324 (Cell L-0124)
	RLD-LE~~SHH~~-2325 (Cell L-0124)
	RLD-LE~~SHH~~-2326 (Cell L-0125)
	RLD-LE~~SHH~~-2327 (Cell L-0125)
	RLD-LE~~SHH~~-2328 (Cell L-0126)
	RLD-LE~~SHH~~-2329 (Cell L-0126)
	
	Final Control Elements
	DIW-YV-2119 via DIW-YC-2119
	DIW-YV-2120 via DIW-YC-2120
		(TAC):
		LAW RLD cell flooding detection designs send interlock trip signals and an alarm is annunciated when the following cell flooding level setpoints ~~(TBD)~~ ~~is~~ are detected on cell floors~~.~~:
		• For room L-0123 setpoint ≤ 23.35 inches
		• For room L-0124 setpoint ≤ 23.35 inches
		• For room L-0125 setpoint ≤ 24.43 inches
		• For room L-0126 setpoint ≤ 51.96 inches
		
		DIW valves close upon initiation of High liquid level interlock signal from the PPJ system and alarm is annunciated when cell flooding levelis detected.
			Simulant is water.
			This is a complicated test with multiple system interactions.
			
			References:
			24590-LAW-M6LN-20-00006, *Change the Off-Sheet Connector Notation from RLD Safety Level Instruments*
			24590-LAW-M6-DIW-00001001, *P&ID – LAW Demineralized Water DIW-TK-00003*
			24590-LAW-PISW-J-08-0033-01, *System Design Document for LAW Radioactive Liquid Waste Disposal (RLD) System*
			24590-LAW-M6C-RLD-00023, Analytical Limits for Law Process Cell Flooding Level Interlocks
				Line isolation valves are initially in the open position.
				
				Safety function components are in normal operation.

Notes:

* Test acceptance criteria (TAC) are based on requirements from authorization basis documents. General test criteria (GTC) are requirements from other sources.

Appendix C DELETED ~~Active Safety Instruments and Functions~~

~~The listed instruments are designated as having active safety functions, implemented through interface with and programming in the PPJ system. Information in the table below reflects the current design of active safety instruments, including functions, and safety designations per the P&IDs and associated equipment and instrument lists. In some cases the current safety classification of the SSCs in design is known to exceed the design requirements. The information will be updated as needed to reflect changes to the design. The information below is provided in support of Plant Engineering and Operations and does not represent design requirements.~~

~~Function Title~~	~~Safety Designation~~	~~Sensors~~	~~Final Control Elements~~	~~Functional Description~~
~~Process Cell L-0123 Flooding Interlock~~	~~SS~~	~~RLD-LSHH-2322~~ ~~RLD-LSHH-2323~~	~~DIW-YV-2119 via DIW-YC-2119~~ ~~DIW-YV-2120 via DIW-YC-2120~~	~~High sump level isolates DIW supply~~
~~Process Cell L-0124 Flooding Interlock~~	~~SS~~	~~RLD-LSHH-2324~~ ~~RLD-LSHH-2325~~	~~DIW-YV-2119 via DIW-YC-2119~~ ~~DIW-YV-2120 via DIW-YC-2120~~	~~High sump level isolates DIW supply~~
~~Process Cell L-0125 Flooding Interlock~~	~~SS~~	~~RLD-LSHH-2326~~ ~~RLD-LSHH-2327~~	~~DIW-YV-2119 via DIW-YC-2119~~ ~~DIW-YV-2120 via DIW-YC-2120~~	~~High sump level isolates DIW supply~~
~~Process Cell L-0126 Flooding Interlock~~	~~SS~~	~~RLD-LSHH-2328~~ ~~RLD-LSHH-2329~~	~~DIW-YV-2119 via DIW-YC-2119~~ ~~DIW-YV-2120 via DIW-YC-2120~~	~~High sump level isolates DIW supply~~