0052354

Department of Energy
Richland Operations Office
P.O. Box 550
Richland, Washington 99352

JAN 10 2000

00-OSS-101

RECEIVED
JAN 13 2000
EDMC

Ms. L. E. Ruud, Permit Specialist
Nuclear Waste Program
State of Washington
Department of Ecology
1315 West Fourth Avenue
Kennewick, Washington 99336

Dear Ms. Ruud:

QUARTERLY NOTIFICATION OF CLASS 1 MODIFICATIONS TO THE HANFORD FACILITY RESOURCE CONSERVATION AND RECOVERY ACT (RCRA) PERMIT, DANGEROUS WASTE PORTION (DW PORTION) (QUARTER ENDING DECEMBER 31, 1999 - CONDITION I.C.3)

In accordance with condition I.C.3 of the Hanford Facility RCRA Permit, enclosed for your notification are the Class 1 modifications to the Hanford Facility RCRA Permit, DW Portion. Modifications this quarter included updating information in the List of Attachments and in Part III (Enclosure). The Part III Class 1 modifications pertain to the Liquid Effluent Retention Facility and Effluent Treatment Facility, 242-A Evaporator, and the 305-B Storage Facility. The Class 1 modifications are being made to ensure that all activities conducted are in compliance with the RCRA Permit, DW Portion.

JAN 10 2000

Should you have any questions regarding this information, please contact Ellen M. Mattlin, U.S. Department of Energy, Richland Operations Office, on (509) 376-2385; Richard H. Engelmann, Fluor Daniel Hanford, Inc., (509) 376-7485; or Alice K. Ikenberry, Pacific Northwest National Laboratory, on (509) 373-5638.

James E. Rasmussen, Acting Director
Office of Site Services
DOE Richland Operations Office

Richard H. Gurske, Project Manager
Environmental Services
Fluor Hanford, Inc.

Roby D. Enge, Director
Environment, Safety, and Health
Pacific Northwest National Laboratory

Enclosure:
Quarterly Notification of Class 1 Modifications to the Hanford Facility RCRA Permit, DW Portion (Quarter Ending December 31, 1999 - Condition I.C.3)

cc w/encl:
Administrative Record, H6-08
HF Operating Record, H6-08
Ecology NWP Kennewick Library
Environmental Portal, LMSI
A. K. Ikenberry, PNNL
R. Jim, YN
R. J. Landon, BHI
P. Sobotta, NPT
S. A. Thompson, FDH
J. R. Wilkinson, CTUIR

cc w/o encl:
L. J. Cusack, Ecology
R. J. Julian, Ecology
A. B. Stone, Ecology
J. J. Wallace, Ecology
D. R. Sherwood, EPA
E. S. Aromi, FDH
R. H. Gurske, FDH
R. D. Enge, PNNL

Hanford Facility RCRA Permit Modification Notification Forms

Part III, Chapter 4 and Attachment 34
Liquid Effluent Retention Facility and 200 Area Effluent Treatment Facility

Index

Page 2 of 12: Chapter 4, Section 4.2.1.
Page 3 of 12: Chapter 4, Section 4.2.1.
Page 4 of 12: Chapter 4, Section 4.4.1.4.
Page 5 of 12: Chapter 4, Section 4.4.4.1.2.
Page 6 of 12: Chapter 4, Section 4.4.5.2.
Page 7 of 12: Chapter 4, Table 4-2
Page 8 of 12: Chapter 4, Section 4.2.5.
Page 9 of 12: Chapter 4, Section 4.2.5.2
Page 10 of 12: Chapter 4, Section 4.5.2.1.
Page 11 of 12: Chapter 4, Section 4.6.2.2.
Page 12 of 12: Appendix 4B, Table 4B-2

Hanford Facility RCRA Permit Modification Notification Form

Unit:	Permit Part & Chapter:
Liquid Effluent Retention Facility and 200 Area Effluent Treatment Facility	**Part III, Chapter 4 and Attachment 34**

Description of Modification:
Section 4.2.1:

4.2.1 Load-In Station

The ETF receives aqueous waste from LERF or the Load-In Station. The ETF Load-In Station, located due east of the surge tank and outside of the perimeter fence (Figure 4-3), was designed and constructed to provide the capability to unload, store, and transfer aqueous waste to the ETF or LERF from tanker trucks~~, and potentially~~ and other containers (such as drums). The Load-In Station consists of two load-in tanks, transfer pumps, filtration system, level instrumentation for tanker trucks, leak detection capabilities for the containment basin and transfer line, and an underground transfer line that connects to lines in the surge tank berm, allowing transfers to either the ETF surge tank or LERF.

~~Currently, t~~Tanker trucks and other containers are used to unload aqueous waste at the Load-In Station. To perform unloading, the~~A~~ tanker truck is positioned on a truck pad, a 'load-in' transfer line is connected to the truck, and the tanker contents are pumped into one of the Load-In Station tanks, the surge tank, or directly to the LERF. For container unloading, the container is placed on the truck pad and the container contents are pumped into one of the Load-In Station tanks, the surge tank, or directly to the LERF.

During unloading operations, solids may be removed from the waste by pumping the contents of the tanker truck or container through a filtration system. If solids removal is not needed, the filtration system is not used and the solution is transferred directly to the Load-In Station tanks, surge tank, or to LERF.

Any leaks at the Load-In Station drain to the sump. A leak detector in the sump alarms locally and in the ETF control room. Alternatively, leaks can be visually detected.

Modification Class: [1 2 3]	Class 1	Class[1]1	Class 2	Class 3
Please check one of the Classes:		X		

Relevant WAC 173-303-830, Appendix I Modification: G.1.e. Tanks

Enter wording of the modification from WAC 173-303-830, Appendix I citation

e. Modification or addition of tank units or treatment processes necessary to treat wastes that are restricted from land disposal to meet some or all of the applicable treatment standards or to treat wastes to satisfy (in whole or in part) the standard of "use of practically available technology that yields the greatest environmental benefit" contained in 40 CFR 268.8 (a)(2)(ii), with prior approval of the director. This modification may also involve addition of new waste codes. It is not applicable to dioxin-containing wastes (F020, 021, 022, 023, 026, 027, and 028).

Submitted by Co-Operator:	Reviewed by RL Program Office:	Reviewed by Ecology:	Reviewed by Ecology:
Kenneth J. Swoboda for 7/12/99	7/13/99	7/15/99	7/27/99
J. D. Williams Date	H. E. Bilson Date	R. J. Julian Date	L.E. Ruud Date

[1]Class 1 modifications requiring prior Agency approval.

[2] This is only an advanced notification of an intended Class [1]1, 2, or 3 modification, this should be followed with a formal modification request, and consequently implement the required Public Involvement processes when required.

[3] If the proposed modification does not match any modification listed in WAC 173-303-830 Appendix I, then the proposed modification should automatically be given a Class 3 status. This status may be maintained by the Department of Ecology, or down graded to [1]1, if appropriate.

Hanford Facility RCRA Permit Modification Notification Form

Unit:	Permit Part & Chapter:
Liquid Effluent Retention Facility and 200 Area Effluent Treatment Facility	**Part III, Chapter 4 and Attachment 34**

Description of Modification:

Section ~~4.2.1~~: 4.4.1.2: 7/15/99

4.1.2 7/15/99

~~4.2.1~~ Design Information for Tanks Located Outside of Effluent Treatment Facility
The load-in tanks, surge tank, and verification tanks are located outside the ETF. These tanks are located within concrete structures that provide secondary containment.

Load-In Tanks and Ancillary Equipment. The load-in tanks are constructed of stainless steel, are heated, and have a nominal capacity of 37,900 liters. Ancillary equipment includes transfer pumps, a filtration system, a double-encased, fiberglass transfer pipeline, level instruments for tanker trucks, and leak detection equipment. From the Load-In Station, aqueous waste can be routed to the surge tank or to the LERF through a double-encased line. The load-in tanks, sump, pumps, and truck pad are all provided with secondary containment.

Modification Class: [1 2 3]	Class 1	Class[1] 1	Class 2	Class 3
Please check one of the Classes:		X		

Relevant WAC 173-303-830, Appendix I Modification: G.1.e. Tanks

Enter wording of the modification from WAC 173-303-830, Appendix I citation

e. Modification or addition of tank units or treatment processes necessary to treat wastes that are restricted from land disposal to meet some or all of the applicable treatment standards or to treat wastes to satisfy (in whole or in part) the standard of "use of practically available technology that yields the greatest environmental benefit" contained in 40 CFR 268.8 (a)(2)(ii), with prior approval of the director. This modification may also involve addition of new waste codes. It is not applicable to dioxin-containing wastes (F020, 021, 022, 023, 026, 027, and 028).

Submitted by Co-Operator:	Reviewed by RL Program Office:	Reviewed by Ecology:	Reviewed by Ecology:
for 7/12/99	7/13/99	7/15/99	7/21/99
J.D. Williams Date	H. E. Bilson Date	R. J. Julian Date	L.E. Ruud Date

[1]Class 1 modifications requiring prior Agency approval.

[2] This is only an advanced notification of an intended Class [1] 1, 2, or 3 modification, this should be followed with a formal modification request, and consequently implement the required Public Involvement processes when required.

[3] If the proposed modification does not match any modification listed in WAC 173-303-830 Appendix I, then the proposed modification should automatically be given a Class 3 status. This status may be maintained by the Department of Ecology, or down graded to [1] 1, if appropriate.

Hanford Facility RCRA Permit Modification Notification Form

Unit:	Permit Part & Chapter:
Liquid Effluent Retention Facility and 200 Area Effluent Treatment Facility	**Part III, Chapter 4 and Attachment 34**

Description of Modification:

Section 4.4.1.4:

4.4.1.4 Design Information for Effluent Treatment Facility Process Units
As with the ETF tanks, process units that treat and/or store dangerous and/or mixed waste are maintained at or near atmospheric pressure. These units were constructed to meet a series of design standards, as discussed in the following sections. Table 4-2 presents the materials of construction and the ancillary equipment associated with these process units. All piping systems are designed to withstand the effects of internal pressure, weight, thermal expansion and contraction, and any pulsating flow. The design and integrity of these units are presented in the engineering assessment (Mausshardt 1995).

Filters. The load-in fine and rough filter vessels (including the auxiliary filters) are designed to comply with the ASME Section VIII, Division I, Pressure Vessels (ASME 1992a). The application of these standards to the construction of the ETF filter system and independent inspection ensure that the filter and filter supports have sufficient structural strength and that the seams and connections are adequate to ensure the integrity of the filter vessels.

Modification Class: [1 2 3]	Class 1	Class[1]1	Class 2	Class 3
Please check one of the Classes:		X		

Relevant WAC 173-303-830, Appendix I Modification: G.1.e. Tanks

Enter wording of the modification from WAC 173-303-830, Appendix I citation

e. Modification or addition of tank units or treatment processes necessary to treat wastes that are restricted from land disposal to meet some or all of the applicable treatment standards or to treat wastes to satisfy (in whole or in part) the standard of "use of practically available technology that yields the greatest environmental benefit" contained in 40 CFR 268.8 (a)(2)(ii), with prior approval of the director. This modification may also involve addition of new waste codes. It is not applicable to dioxin-containing wastes (F020, 021, 022, 023, 026, 027, and 028).

Submitted by Co-Operator:	Reviewed by RL Program Office:	Reviewed by Ecology:	Reviewed by Ecology:
Kenneth D. Sibole for 7/12/99	7/13/99	7/13/99	7/20/99
J. D. Williams Date	H. E. Bilson Date	R. J. Julian Date	L.E. Ruud Date

[1]Class 1 modifications requiring prior Agency approval.

[2] This is only an advanced notification of an intended Class [1]1, 2, or 3 modification, this should be followed with a formal modification request, and consequently implement the required Public Involvement processes when required.

[3] If the proposed modification does not match any modification listed in WAC 173-303-830 Appendix I, then the proposed modification should automatically be given a Class 3 status. This status may be maintained by the Department of Ecology, or down graded to [1]1, if appropriate.

Hanford Facility RCRA Permit Modification Notification Form

Unit:	Permit Part & Chapter:
Liquid Effluent Retention Facility and 200 Area Effluent Treatment Facility	**Part III, Chapter 4 and Attachment 34**

Description of Modification:

Section 4, Table 4-2:

Table 4-2. Ancillary Equipment and Material Data. (sheet 1 of 2)

System	Ancillary equipment	Number	Material
Load-in tanks	Load-in/transfer pumps (2)	P-103A/-103B	316 SS
	~~Load-in filters (3)~~	~~59A-FL-0017-002/-003~~	~~304 SS~~

Modification Class: [1 2 3]	Class 1	Class[1]1	Class 2	Class 3
Please check one of the Classes:		X		

Relevant WAC 173-303-830, Appendix I Modification: G.1.e. Tanks

Enter wording of the modification from WAC 173-303-830, Appendix I citation

e. Modification or addition of tank units or treatment processes necessary to treat wastes that are restricted from land disposal to meet some or all of the applicable treatment standards or to treat wastes to satisfy (in whole or in part) the standard of "use of practically available technology that yields the greatest environmental benefit" contained in 40 CFR 268.8 (a)(2)(ii), with prior approval of the director. This modification may also involve addition of new waste codes. It is not applicable to dioxin-containing wastes (F020, 021, 022, 023, 026, 027, and 028).

Submitted by Co-Operator:	Reviewed by RL Program Office:	Reviewed by Ecology:	Reviewed by Ecology:
for 7/12/99	7/13/99	7/13/99	7/27/99
J. D. Williams Date	H. E. Bilson Date	R. J. Julian Date	L.E. Ruud Date

[1]Class 1 modifications requiring prior Agency approval.

[2] This is only an advanced notification of an intended Class [1]1, 2, or 3 modification, this should be followed with a formal modification request, and consequently implement the required Public Involvement processes when required.

[3] If the proposed modification does not match any modification listed in WAC 173-303-830 Appendix I, then the proposed modification should automatically be given a Class 3 status. This status may be maintained by the Department of Ecology, or down graded to [1]1, if appropriate.

Hanford Facility RCRA Permit Modification Notification Form

Unit:	Permit Part & Chapter:
Liquid Effluent Retention Facility and 200 Area Effluent Treatment Facility	**Part III, Chapter 4 and Attachment 34**

Description of Modification:

Section 4.4.5.2:

Filter Systems. ~~Both the rough filter and fine filter~~All filters at ETF (i.e., the Load-In Station, rough, fine and auxiliary filter systems) are in leak-tight steel casings. For the rough and fine filters, a~~A~~ high differential pressure, which could damage the filter element, ~~d~~eactivates a valve that shuts off liquid flow to protect the filter element from possible damage. To prevent a high pressure situation, the filters are cleaned routinely with pulses of compressed air that force water back through the filter. Cleaning is terminated automatically by shutting off the compressed air supply if high pressure develops. The differential pressure across the auxiliary filters also is monitored. A high differential pressure in these filters would result in a system shutdown to allow the filters to be changed out.

The Load-In Station filtration system has pressure gauges for monitoring the differential pressure across each filter. A high differential pressure would result in discontinuing filter operation until the filter is replaced.

Modification Class: [1 2 3]	Class 1	Class[1] 1	Class 2	Class 3
Please check one of the Classes:		X		

Relevant WAC 173-303-830, Appendix I Modification: G.1.e. Tanks

Enter wording of the modification from WAC 173-303-830, Appendix I citation

e. Modification or addition of tank units or treatment processes necessary to treat wastes that are restricted from land disposal to meet some or all of the applicable treatment standards or to treat wastes to satisfy (in whole or in part) the standard of "use of practically available technology that yields the greatest environmental benefit" contained in 40 CFR 268.8 (a)(2)(ii), with prior approval of the director. This modification may also involve addition of new waste codes. It is not applicable to dioxin-containing wastes (F020, 021, 022, 023, 026, 027, and 028).

Submitted by Co-Operator:	Reviewed by RL Program Office:	Reviewed by Ecology:	Reviewed by Ecology:
Kenneth J. Scobbie for 7/12/99	Helen E. Bilson 7/13/99	7/15/99	7/27/99
J. D. Williams Date	H. E. Bilson Date	R. J. Julian Date	L.E. Ruud Date

[1]Class 1 modifications requiring prior Agency approval.

[2] This is only an advanced notification of an intended Class [1]1, 2, or 3 modification, this should be followed with a formal modification request, and consequently implement the required Public Involvement processes when required.

[3] If the proposed modification does not match any modification listed in WAC 173-303-830 Appendix I, then the proposed modification should automatically be given a Class 3 status. This status may be maintained by the Department of Ecology, or down graded to [1]1, if appropriate.

Hanford Facility RCRA Permit Modification Notification Form

Unit:	Permit Part & Chapter:
Liquid Effluent Retention Facility and 200 Area Effluent Treatment Facility	**Part III, Chapter 4 and Attachment 34**

Description of Modification:

Section 4.4.4.1.2:

4.4.4.1.2 Specific Containment Systems

The following discussion presents a description of the individual containment systems associated with specific tank systems.

Load-In Tank Secondary Containment. The load-in tanks are mounted on a 46-centimeter-thick reinforced concrete slab (Drawing H-2-817970, Appendix 4B). Secondary containment is provided by a pit with 30.5-centimeter-thick walls and a floor constructed of reinforced concrete. The load-in tank pit is sloped to drain solution to a sump. The depth of the pit varies with the slope of the floor, with an average thickness of about 1.1 meters. The volume of the secondary containment is about 79,000 liters, which is capable of containing the volume of at least one load-in tank (i.e., 37,800 liters). Leaks are detected by a leak detector that alarms locally and in the ETF control room and by visual inspection of the secondary containment.

Adjacent to the pit is a 25.4-centimeter-thick reinforced concrete pad that serves as secondary containment for the load-in tanker trucks, containers, ~~and~~ transfer pumps, and filter system. The pad is 15.2 centimeters below grade with north and south walls gently sloped to allow truck access. The pad has drain pipes to route waste solution to the adjacent load-in tank pit.

Modification Class: [1 2 3]	Class 1	Class [1] 1	Class 2	Class 3
Please check one of the Classes:		X		

Relevant WAC 173-303-830, Appendix I Modification: G.1.e. Tanks

Enter wording of the modification from WAC 173-303-830, Appendix I citation

e. Modification or addition of tank units or treatment processes necessary to treat wastes that are restricted from land disposal to meet some or all of the applicable treatment standards or to treat wastes to satisfy (in whole or in part) the standard of "use of practically available technology that yields the greatest environmental benefit" contained in 40 CFR 268.8 (a)(2)(ii), with prior approval of the director. This modification may also involve addition of new waste codes. It is not applicable to dioxin-containing wastes (F020, 021, 022, 023, 026, 027, and 028).

Submitted by Co-Operator:	Reviewed by RL Program Office:	Reviewed by Ecology:	Reviewed by Ecology:
Kenneth J. Svoboda for 7/12/99	Hilda G. Bilson 7/13/99	7/15/99	7/27/99
J. D. Williams Date	H. E. Bilson Date	R. J. Julian Date	L.E. Ruud Date

[1] Class 1 modifications requiring prior Agency approval.

[2] This is only an advanced notification of an intended Class [1] 1, 2, or 3 modification, this should be followed with a formal modification request, and consequently implement the required Public Involvement processes when required.

[3] If the proposed modification does not match any modification listed in WAC 173-303-830 Appendix I, then the proposed modification should automatically be given a Class 3 status. This status may be maintained by the Department of Ecology, or down graded to [1] 1, if appropriate.

Hanford Facility RCRA Permit Modification Notification Form

Unit:	Permit Part & Chapter:
Liquid Effluent Retention Facility and 200 Area Effluent Treatment Facility	**Part III, Chapter 4 and Attachment 34**

Description of Modification:

Chapter 4, Section 4.2.5.:

4.2.5. Other Effluent Treatment Facility Systems

The ETF is provided with support systems that facilitate treatment in the primary and secondary treatment trains and that provide for worker safety and environmental protection. An overview of the following systems is provided:

- Monitor and control system
- Vessel offgas system
- Sump collection system
- Chemical ~~reagent~~ injection feed system
- Verification tank recycle system
- Utilities.

Modification Class: [1 2 3]	Class 1	Class[1]1	Class 2	Class 3
Please check one of the Classes:	X			

Relevant WAC 173-303-830, Appendix I Modification: A.1.

Enter wording of the modification from WAC 173-303-830, Appendix I citation

A. General Permit Provisions

1. Administrative and Informational changes.

Submitted by Co-Operator:	Reviewed by RL Program Office:	Reviewed by Ecology:	Reviewed by Ecology:
E. S. Aromi Date	R. F. Guercia Date	R. J. Julian Date	L.E. Ruud Date

[1]Class 1 modifications requiring prior Agency approval.

[2] This is only an advanced notification of an intended Class [1]1, 2, or 3 modification, this should be followed with a formal modification request, and consequently implement the required Public Involvement processes when required.

[3] If the proposed modification does not match any modification listed in WAC 173-303-830 Appendix I, then the proposed modification should automatically be given a Class 3 status. This status may be maintained by the Department of Ecology, or down graded to [1]1, if appropriate.

Hanford Facility RCRA Permit Modification Notification Form

Unit:	Permit Part & Chapter:
Liquid Effluent Retention Facility and 200 Area Effluent Treatment Facility	**Part III, Chapter 4 and Attachment 34**

Description of Modification:

Chapter 4, Section 4.2.5.2.:

4.2.5.2. Vessel Offgas System

Ventilation for various tanks and vessels is provided through the vessel offgas system. The system includes a moisture separator, duct heater, pre-filter, high-efficiency particulate air filters, carbon adsorber (when required to reduce organic emissions), exhaust fans, and ductwork. Gasses ventilated from the tanks and vessels enter the exhaust system through the connected ductwork. The vessel offgas system draws vapors and gasses off the following tanks and treatment systems:

- Surge tank
- ETF evaporator
- pH adjustment tank
- Concentrate tanks
- Degasification system
- First and second RO stages
- Dry powder hopper
- Effluent pH adjustment tank
- Drum capping station
- Secondary waste receiving tanks
- Resin dewatering system
- Distillate condenser (off the thin film dryer)
- Sump tanks 1 and 2.

Modification Class: [1 2 3]	Class 1	Class[1]1	Class 2	Class 3
Please check one of the Classes:	X			

Relevant WAC 173-303-830, Appendix I Modification: A.1.

Enter wording of the modification from WAC 173-303-830, Appendix I citation

A. General Permit Provisions
   1. Administrative and Informational changes.

Submitted by Co-Operator:		Reviewed by RL Program Office:		Reviewed by Ecology:		Reviewed by Ecology:	
E. S. Aromi	Date 12/13/99	R. F. Guercia	Date DEC 27 1999	R. J. Julian	Date	L.E. Ruud	Date

[1]Class 1 modifications requiring prior Agency approval.

[2] This is only an advanced notification of an intended Class [1]1, 2, or 3 modification, this should be followed with a formal modification request, and consequently implement the required Public Involvement processes when required.

[3] If the proposed modification does not match any modification listed in WAC 173-303-830 Appendix I, then the proposed modification should automatically be given a Class 3 status. This status may be maintained by the Department of Ecology, or down graded to [1]1, if appropriate.

Hanford Facility RCRA Permit Modification Notification Form

Unit:	Permit Part & Chapter:
Liquid Effluent Retention Facility and 200 Area Effluent Treatment Facility	**Part III, Chapter 4 and Attachment 34**

Description of Modification:

Chapter 4, Section 4.5.2.1.:

4.5.2.1. Liner Construction Materials [650(2)(a)(i)(A)]

The LERF employs a double-composite liner system with a leachate detection, collection, and removal system between the primary and secondary liners. Each basin is constructed with an upper or primary liner consisting of a high-density polyethylene geomembrane laid over a bentonite carpet liner. The lower or secondary liner in each basin is a composite of a geomembrane laid over a layer of soil/bentonite admixture with a hydraulic conductivity less than 10^{-7} centimeters per second. The synthetic liners extend up the dike wall to a concrete anchor wall that completely surrounds the basin at the top of the dike. A batten system bolts the layers in place to the anchor wall (Figure 4-15).

Modification Class: [1 2 3]	Class 1	Class[1] 1	Class 2	Class 3
Please check one of the Classes:	X			

Relevant WAC 173-303-830, Appendix I Modification: A.2.

Enter wording of the modification from WAC 173-303-830, Appendix I citation

A. General Permit Provisions
   2. Correction of typographical errors.

Submitted by Co-Operator:		Reviewed by RL Program Office:		Reviewed by Ecology:		Reviewed by Ecology:	
ESAromi 12/13/99		RFGuercia DEC 27 1999					
E. S. Aromi	Date	R. F. Guercia	Date	R. J. Julian	Date	L.E. Ruud	Date

[1]Class 1 modifications requiring prior Agency approval.

[2] This is only an advanced notification of an intended Class [1]1, 2, or 3 modification, this should be followed with a formal modification request, and consequently implement the required Public Involvement processes when required.

[3] If the proposed modification does not match any modification listed in WAC 173-303-830 Appendix I, then the proposed modification should automatically be given a Class 3 status. This status may be maintained by the Department of Ecology, or down graded to [1]1, if appropriate.

Hanford Facility RCRA Permit Modification Notification Form

Unit:	Permit Part & Chapter:
Liquid Effluent Retention Facility and 200 Area Effluent Treatment Facility	**Part III, Chapter 4 and Attachment 34**

Description of Modification:

Chapter 4, Section 4.6.2.2.:

4.6.2.2. Demonstrating Compliance [D-8a(2)(b)]

Calculations to determine organic emissions are performed using the following assumptions:

- Maximum flow rate from LERF to ETF is 568 liters per minute.
- Emissions of organics from tanks and vessels upstream of the UV/OX process are determined from flow and transfer rates given in *Clean Air Act Requirements, WAC 173-400, As-built Documentation, Project C-018H, 242-A Evaporator/PUREX Plant Process Condensate Treatment Facility* (Adtechs 1995).
- UV/OX reaction rate constants and residence times are used to determine the amount of organics which are destroyed in the UV/OX process. These constants are given in *200 Area Effluent Treatment Facility Delisting Petition* (DOE/RL 1992).
- All organic compounds that are not destroyed in the UV/OX process are assumed to be emitted from the tanks and vessels into the vessel offgas system.
- No credit for removal of organic compounds in the vessel offgas system carbon adsorber unit is taken. The activated carbon absorbers are used if required to reduce organic emissions.

Modification Class: [1 2 3]	Class 1	Class[1]1	Class 2	Class 3
Please check one of the Classes:	X			

Relevant WAC 173-303-830, Appendix I Modification: A.1.

Enter wording of the modification from WAC 173-303-830, Appendix I citation

1. General Permit Provisions
   A. Administrative and Informational changes.

Submitted by Co-Operator:		Reviewed by RL Program Office:		Reviewed by Ecology:		Reviewed by Ecology:	
E. S. Aromi	Date 12/13/95	R. F. Guercia	Date 1 DEC 1995	R. J. Julian	Date	L.E. Ruud	Date

[1]Class 1 modifications requiring prior Agency approval.

[2] This is only an advanced notification of an intended Class [1]1, 2, or 3 modification, this should be followed with a formal modification request, and consequently implement the required Public Involvement processes when required.

[3] If the proposed modification does not match any modification listed in WAC 173-303-830 Appendix I, then the proposed modification should automatically be given a Class 3 status. This status may be maintained by the Department of Ecology, or down graded to [1]1, if appropriate.

Hanford Facility RCRA Permit Modification Notification Form

Unit:	Permit Part & Chapter:
Liquid Effluent Retention Facility and 200 Area Effluent Treatment Facility	**Part III, Chapter 4 and Attachment 34**

Description of Modification:

Appendix 4B, Table 4B-2:

Table 4B-2. Drawings of Major Process Units and Tanks at the Effluent Treatment Facility and Load-In Station.

ETF Process Unit	Drawing Number	Outstanding ECNs	Drawing Title
Load-In Facility	H-2-817974, Sh 1, Rev. 9	ECN-647201L ECN-642820L ECN-647247 ECN-649112 ECN-649116	P&ID - ETF Truck Load-In Facility (Sheet 1)

Modification Class: [1 2 3]	Class 1	Class[1] 1	Class 2	Class 3
Please check one of the Classes:		X		

Relevant WAC 173-303-830, Appendix I Modification: G.1.e. Tanks

Enter wording of the modification from WAC 173-303-830, Appendix I citation

G.1.e. Modification or addition of tank units or treatment processes necessary to treat wastes that are restricted from land disposal to meet some or all of the applicable treatment standards or to treat wastes to satisfy (in whole or in part) the standard of "use of practically available technology that yields the greatest environmental benefit" contained in 40 CFR 268.8 (a)(2)(ii), with prior approval of the director. This modification may also involve addition of new waste codes. It is not applicable to dioxin-containing wastes (F020, 021, 022, 023, 026, 027, and 028).

Submitted by Co-Operator:	Reviewed by RL Program Office:	Reviewed by Ecology:	Reviewed by Ecology:
E.S. Aromi 12/13/99 Date	R. F. Guercia DEC 2 7 1999 Date	R. J. Julian Date	L.E. Ruud Date

[1]Class 1 modifications requiring prior Agency approval.

[2] This is only an advanced notification of an intended Class [1]1, 2, or 3 modification, this should be followed with a formal modification request, and consequently implement the required Public Involvement processes when required.

[3] If the proposed modification does not match any modification listed in WAC 173-303-830 Appendix I, then the proposed modification should automatically be given a Class 3 status. This status may be maintained by the Department of Ecology, or down graded to [1]1, if appropriate.

Hanford Facility RCRA Permit Modifications

Part III, Chapter 4 and Attachment 34
Liquid Effluent Retention Facility and 200 Area Effluent Treatment Facility

Replacement Chapters

Index

Chapter 4

Appendix 4B

CONTENTS

4.0 PROCESS INFORMATION [D] 4-1

4.1 LIQUID EFFLUENT RETENTION FACILITY PROCESS DESCRIPTION 4-1

4.2 EFFLUENT TREATMENT FACILITY PROCESS DESCRIPTION 4-2
4.2.1 Load-In Station 4-2
4.2.2 Effluent Treatment Facility Operating Configuration 4-3
4.2.3 Primary Treatment Train 4-3
4.2.4 Secondary Treatment Train 4-6
4.2.5 Other Effluent Treatment Facility Systems 4-7
4.2.5.1 Monitor and Control System 4-8
4.2.5.2 Vessel Offgas System 4-8
4.2.5.3 Sump Collection System 4-8
4.2.5.4 Chemical Injection Feed System 4-9
4.2.5.5 Verification Tank Recycle System 4-9
4.2.5.6 Utilities 4-9

4.3 CONTAINERS [D-1] 4-9
4.3.1 Description of Containers [D-1a] 4-10
4.3.2 Container Management Practices [D-1b] 4-10
4.3.3 Container Labeling [D-1c] 4-11
4.3.4 Containment Requirements for Managing Containers [D-1d] 4-11
4.3.4.1 Secondary Containment System Design [D-1d(1)(a)] 4-11
4.3.4.2 Removal of Liquids from Containment Systems [D-1d(2)] 4-12
4.3.4.3 Prevention of Ignitible, Reactive, and Incompatible Wastes in Containers [D-1f] 4-12

4.4 TANK SYSTEMS [D-2] 4-12
4.4.1 Design Requirements [D-2a(1)] 4-13
4.4.1.1 Codes and Standards for Tank System Construction 4-14
4.4.1.2 Design Information for Tanks Located Outside of Effluent Treatment Facility 4-15
4.4.1.3 Design Information for Tanks Located Inside the Effluent Treatment Facility Building 4-15
4.4.1.4 Design Information for Effluent Treatment Facility Process Units 4-17
4.4.2 Integrity Assessments [D-2a(2)] 4-17
4.4.3 Additional Requirements for New Tanks [D-2a(4)] 4-18
4.4.4 Secondary Containment and Release Detection for Tank Systems [D-2b] 4-18
4.4.4.1 Secondary Containment Requirements for All Tank Systems [D-2b(1)] 4-19
4.4.4.2 Additional Requirements for Specific Types of Systems [D-2b(2)] 4-22
4.4.5 Tank Management Practices [D-2d] 4-23
4.4.5.1 Rupture, Leakage, Corrosion Prevention 4-23
4.4.5.2 Overfilling Prevention 4-23
4.4.6 Labels or Signs [D-2e] 4-25
4.4.7 Air Emissions [D-2f] 4-26
4.4.8 Management of Ignitible or Reactive Wastes in Tanks Systems [D-2g] 4-26
4.4.9 Management of Incompatible Wastes in Tanks Systems [D-2h] 4-26

CONTENTS (cont)

4.5 SURFACE IMPOUNDMENTS [173-303-806-(4)(d)] 4-26
4.5.1 List of Dangerous Waste [806(4)(d)(i)] 4-26
4.5.2 Construction, Operation, and Maintenance of Liner System [806(4)(d)(ii)(A)] 4-26
4.5.2.1 Liner Construction Materials [650(2)(a)(i)(A)] 4-27
4.5.2.2 Liner System Location Relative to High-Water Table 4-32
4.5.2.3 Liner System Foundation [650(2)(a)(I)(B)] 4-32
4.5.2.4 Liner System Exposure Prevention 4-33
4.5.2.5 Liner Coverage [650(2)(a)(I)(C)] 4-34
4.5.3 Prevention of Overtopping [806(4)(d)(ii)(B)] 4-34
4.5.3.1 Freeboard 4-34
4.5.3.2 Immediate Flow Shutoff 4-35
4.5.3.3 Outflow Destination 4-35
4.5.4 Structural Integrity of Dikes [806(4)(d)(ii)(C)] 4-35
4.5.4.1 Dike Design, Construction, and Maintenance [650(2)(f), (g), and (h)] 4-35
4.5.4.2 Dike Stability and Protection 4-35
4.5.5 Piping Systems 4-37
4.5.5.1 Secondary Containment System for Piping 4-37
4.5.5.2 Leak Detection System 4-37
4.5.5.3 Certification 4-37
4.5.6 Double Liner and Leak Detection, Collection, and Removal System [806(4)(d)(ii)(D) and 650(2)(j)(iii)] 4-38
4.5.7 Construction Quality Assurance [806(4)(d)(ii)(F)] 4-39
4.5.8 Proposed Action Leakage Rate and Response Action Plan [806(4)(d)(ii)(G)] 4-39
4.5.9 Dike Structural Integrity Engineering Certification [806(4)(d)(v)] 4-39
4.5.10 Management of Ignitible, Reactive, or Incompatible Wastes [806(4)(d)(viii and ix)] 4-39

4.6 AIR EMISSIONS CONTROL [D-8 and D-8a] 4-40
4.6.1 Applicability of Subpart AA Standards [D-8a(1)] 4-40
4.6.2 Process Vents - Demonstrating Compliance [D-8a(2)] 4-40
4.6.2.1 Basis for Meeting Limits/Reductions [D-8a(2)(a)] 4-40
4.6.2.2 Demonstrating Compliance [D-8a(2)(b)] 4-41
4.6.2.3 Reevaluating Compliance with Subpart AA Standards [D-8a(2)(d)] 4-41
4.6.3 Applicability of Subpart CC Standards [D-8c] 4-41
4.6.3.1 Demonstrating Compliance with Subpart CC for Tanks 4-42
4.6.3.2 Demonstrating Compliance with Subpart CC for Containers 4-42
4.6.3.3 Demonstrating Compliance with Subpart CC for Surface Impoundments 4-42

APPENDICES

4A DETAILED DRAWINGS FOR THE LIQUID EFFLUENT RETENTION FACILITY ..... APP 4A-i

4B DETAILED DRAWINGS FOR THE 200 AREA EFFLUENT TREATMENT FACILITY CONTAINER STORAGE AREA AND TANK SYSTEMS ..... APP 4B-i

4C PROFESSIONAL ENGINEER TANK INTEGRITY ASSESSMENT FOR THE 200 AREA EFFLUENT TREATMENT FACILITY TANK SYSTEM ..... APP 4C-i

4D STRUCTURAL INTEGRITY CERTIFICATION OF THE DIKES AT THE LIQUID EFFLUENT RETENTION FACILITY ..... APP 4D-i

FIGURES

Figure 4-1. Liquid Effluent Retention Facility Layout. F4-2
Figure 4-2. Plan View of the 200 Area Effluent Treatment Facility. F4-4
Figure 4-3. 200 Area Effluent Treatment Facility Layout. F4-6
Figure 4-4. 200 Area Effluent Treatment Facility. F4-8
Figure 4-5. Example - 200 Area Effluent Treatment Facility Configuration 1. ..... F4-10
Figure 4-6. Example - 200 Area Effluent Treatment Facility Configuration 2. ..... F4-12
Figure 4-7. Surge Tank F4-14
Figure 4-8. Ultraviolet Light/Oxidation Unit. F4-16
Figure 4-9. Reverse Osmosis Unit. F4-18
Figure 4-10. Ion Exchange Unit. F4-20
Figure 4-11. Verification Tanks. F4-22
Figure 4-12. Effluent Treatment Facility Evaporator. F4-24
Figure 4-13. Thin Film Dryer F4-26
Figure 4-14. Container Handling System F4-28
Figure 4-15. Effluent Treatment Facility Sump Tanks. F4-30
Figure 4-16. Liner Anchor Wall and Cover Tension System. F4-32
Figure 4-17. Liner System Schematic. F4-34
Figure 4-18. Detail of Leachate Collection Sump. F4-36
Figure 4-19. Detail of Leachate Riser Trench. F4-38

TABLES

Table 4-1. 200 Area Effluent Treatment Facility Tank Systems Information. T4-1
Table 4-2. Ancillary Equipment and Material Data. (sheet 1 of 2) T4-2
Table 4-3. Concrete and Masonry Coatings. T4-3
Table 4-4. Geomembrane Material Specifications. T4-4
Table 4-5. Drainage Gravel Specifications. T4-5

This page intentionally left blank.

4.0 PROCESS INFORMATION [D]

This chapter provides a detailed discussion of the LERF and ETF processes and equipment. The LERF and ETF comprise an aqueous waste treatment system located in the 200 East Area that provides storage and treatment for a variety of aqueous radioactive and/or mixed waste. This aqueous waste includes process condensate from the 242-A Evaporator and other aqueous waste generated from onsite remediation and waste management activities.

The LERF consists of three lined surface impoundments, or basins. Aqueous waste from LERF is pumped to the ETF for treatment in a series of process units, or systems, that remove or destroy essentially all of the dangerous waste and radioactive constituents except tritium. The treated effluent is discharged to a State-Approved Land Disposal Site (SALDS) north of the 200 West Area, under the authority of a Washington State Waste Discharge Permit (Ecology 1995a) and the Final Delisting (40 CFR 261, Appendix IX, Table 2).

4.1 LIQUID EFFLUENT RETENTION FACILITY PROCESS DESCRIPTION

Each of the three LERF basins has an operating capacity of 29.5-million liters. The LERF receives aqueous waste through several inlets including the following:

- A pipeline that connects LERF with the 242-A Evaporator
- A pipeline from the 200 West Area
- A pipeline that connects LERF to the Load-In Station at the ETF
- A series of sample ports located at each basin.

Figure 4-1 presents a general layout of LERF and associated pipelines. Engineering drawings for LERF are referenced in Section 4.5 and provided in Appendix 4A.

Aqueous waste from LERF is pumped to the ETF through one of two double-walled fiberglass transfer pipelines. Effluent from the ETF also can be transferred back to the LERF through one of these transfer pipelines. These pipelines are equipped with leak detection located in the annulus between the inner and outer pipes. In the event that these leak detectors are not in service, the pipelines are visually inspected during transfers for leakage by opening the secondary containment drain lines at the ETF end of the transfer pipelines.

Each basin is equipped with six available sample risers constructed of 6-inch perforated pipe. A seventh sample riser in each basin is dedicated to influent aqueous waste receipt piping (except for aqueous waste received from the 242-A Evaporator), and an eighth riser in each basin contains liquid level instrumentation. Each riser extends along the sides of each basin from the top to the bottom of the basin and allow samples to be collected from any depth. Personnel access to these sample ports is from the perimeter area of the basins.

A catch basin is provided at the northwest corner of each LERF basin for aboveground piping and manifolds for transfer pumps. Aqueous waste from the 242-A Evaporator is transferred through piping that ties into piping at the catch basins. Under routine operations, a submersible pump is used to transfer aqueous waste from a LERF basin to the ETF for processing or for basin-to-basin transfers. This pump is connected to a fixed manifold on one of four available risers.

Each basin consists of a multilayer liner system supported by a concrete anchor wall around the basin perimeter and a soil-bentonite clay underlayment. The multilayer liner system consists of a primary liner in contact with the aqueous waste, a layer of bentonite carpet, a geonet, a geotextile, a gravel layer, and a

secondary liner that rests on the bentonite underlayment. Any aqueous waste leakage through the primary liner flows through the geonet to a leachate collection system. The leachate flows to a sump at the northwest corner of each basin, where the leachate is pumped up the sideslope and back into the basin above the primary liner. Each liner is constructed of high-density polyethylene. A floating cover made of very low-density polyethylene is stretched over each basin above the primary liner. These covers serve to keep unwanted material from entering the basins, and to minimize evaporation of the liquid contents.

4.2 EFFLUENT TREATMENT FACILITY PROCESS DESCRIPTION

The ETF is designed as a flexible treatment system that provides treatment for contaminants anticipated in process condensate and other onsite aqueous waste. The design influent flow rate into the ETF is approximately 570 liters per minute with planned outages for activities such as maintenance on the ETF systems. Maintenance outages typically are scheduled between treating a batch of aqueous waste, referred to as treatment campaigns. The effluent flow (or volume) is equivalent to the influent flow (or volume).

The ETF generally receives aqueous waste directly from the LERF. However, aqueous waste also can be transferred from the Load-In Station to the ETF. Aqueous waste is treated and stored in the ETF process area in a series of tank systems, referred to as process units. Within the ETF, waste also is managed in containers through treatment and/or storage. Figure 4-1 provides the relative locations of the process and container storage areas within the ETF.

The process units are grouped in either the primary or the secondary treatment train. The primary treatment train provides for the removal or destruction of contaminants. Typically, the secondary treatment train processes the waste by-products from the primary treatment train by reducing the volume of waste. In the secondary treatment train, contaminants are concentrated and dried to a powder. The liquid fraction is routed to the primary treatment train. Figure 4-2 provides an overview of the layout of the ETF (2025E Building). Figure 4-3 presents the ETF floor plan, the relative locations of the individual process units and associated tanks within the ETF, and the location of the Load-In Station.

The dry powder waste and maintenance and operations waste are containerized and stored or treated in the container storage area or in collection or treatment areas within the Process Area. Secondary containment is provided for all containers and tank systems (including ancillary equipment) housed within the ETF. The trenches and floor of the ETF comprise the secondary containment system. The floor includes approximately a 15.2-centimeter rise (berm) along the containing walls of the process and container storage areas. Any spilled or leaked material from within the process area or container storage area is collected into trenches that feed into either sump tank 1 or sump tank 2. From these sump tanks, the spilled or leaked material (i.e., waste) is fed to either the surge tank and processed in the primary treatment train or the secondary waste receiving tanks and processed in the secondary treatment train. All tank systems outside of the ETF are provided with a secondary containment system.

In the following sections, several figures are provided that present general illustrations of the treatment units and the relation to the process. Detailed drawings of the ETF are provided in Appendix 4B.

4.2.1 Load-In Station

The ETF receives aqueous waste from LERF or the Load-In Station. The ETF Load-In Station, located due east of the surge tank and outside of the perimeter fence (Figure 4-3), was designed and constructed to provide the capability to unload, store, and transfer aqueous waste to the ETF or LERF from tanker trucks and other containers (such as drums). The Load-In Station consists of two load-in tanks, transfer pumps, filtration system, level instrumentation for tanker trucks, leak detection capabilities for the

containment basin and transfer line, and an underground transfer line that connects to lines in the surge tank berm, allowing transfers to either the ETF surge tank or LERF.

Tanker trucks and other containers are used to unload aqueous waste at the Load-In Station. To perform unloading, the tanker truck is positioned on a truck pad, a 'load-in' transfer line is connected to the truck, and the tanker contents are pumped into one of the Load-In Station tanks, the surge tank, or directly to the LERF. For container unloading, the container is placed on the truck pad and the container contents are pumped into one of the Load-In Station tanks, the surge tank, or directly to the LERF.

During unloading operations, solids may be removed from the waste by pumping the contents of the tanker truck or container through a filtration system. If solids removal is not needed, the filtration system is not used and the solution is transferred directly to the Load-In Station tanks, surge tank, or to LERF.

Any leaks at the Load-In Station drain to the sump. A leak detector in the sump alarms locally and in the ETF control room. Alternatively, leaks can be visually detected.

4.2.2 Effluent Treatment Facility Operating Configuration

Because the operating configuration of the ETF can be adjusted or modified, most aqueous waste streams can be effectively treated to below Delisting and Discharge Permit limits. The operating configuration of the ETF depends on the unique chemistry of an aqueous waste stream(s). Before an aqueous waste stream is accepted for treatment, the waste is characterized and evaluated. Information from the characterization is used to adjust the treatment process or change the configuration of the ETF process units, as necessary, to optimize the treatment process for a particular aqueous waste stream.

Typically, an aqueous waste is processed first in the primary treatment train, where the ETF is configured to process an aqueous waste through the UV/OX unit first, followed by the RO unit. However, under an alternate configuration, an aqueous waste could be processed in the RO unit first. For example, high concentrations of nitrates in an aqueous waste might interfere with the performance of the UV/OX. In this case, the ETF could be configured to process the waste in the RO unit before the UV/OX unit.

The flexibility of the ETF also allows for some aqueous waste to be processed in the secondary treatment train first. For example, for small volume aqueous waste with high concentrations of some anions and metals, the approach could be to first process the waste stream in the secondary treatment train. This approach would prevent premature fouling or scaling of the RO unit. The liquid portion (i.e., untreated overheads from the ETF evaporator and thin film dryer) would be sent to the primary treatment train.

Figures 4-4 and 4-5 provide example process flow diagrams for two different operating configurations.

4.2.3 Primary Treatment Train

The primary treatment train consists of the following processes:

- Influent Receipt/Surge tank - inlet, surge capacity
- Filtration - for suspended solids removal
- UV/OX - organic destruction
- pH adjustment - waste neutralization
- Hydrogen peroxide decomposition - removal of excess hydrogen peroxide
- Degasification - removal of carbon dioxide

- RO - removal of dissolved solids and radionuclides
- IX - removal of dissolved solids and radionuclides
- Verification - holding tanks during verification.

Each of the primary treatment train process units and ancillary systems provides treatment for removal or destruction of various constituents. The primary treatment train units are operated as needed in different configurations, as determined by the characteristics of an aqueous waste stream, to protect ETF equipment and to meet discharge requirements.

Influent Receipt/Surge Tank. Depending on the configuration of the ETF, the surge tank is one inlet used to feed an aqueous waste into the ETF for treatment. In Configuration 1 (Figure 4-4), the surge tank is the first component downstream of the LERF. The surge tank provides a storage/surge volume for chemical pretreatment and controls feed flow rates from the LERF to the ETF. However, in Configuration 2 (Figure 4-5), aqueous waste from LERF is fed directly into the treatment units. In this configuration, the surge tank receives aqueous waste that has been processed in the RO units and provides the feed stream to the remaining downstream process units. In yet another configuration, some small volume aqueous waste could be received into the secondary treatment train first for processing. In this case, the aqueous waste would be received directly into the secondary waste receiving tanks. Finally, the surge tank also receives waste extracted from various systems within the primary and secondary treatment train while in operation.

The surge tank is located outside the ETF on the south side. In the surge tank (Figure 4-6), the pH of an aqueous waste is adjusted using the metered addition of sulfuric acid and sodium hydroxide, as necessary, to prepare the waste for treatment in downstream processes. In addition, hydrogen peroxide or biocides could be added to control biological growth in the surge tank. A pump recirculates the contents in the surge tank, mixing the chemical reagents with the waste to a uniform pH.

Filtration. Two primary filter systems remove suspended particles in an aqueous waste: a rough filter removes the larger particulates, while a fine filter removes the smaller particulates. The location of these filters depends on the configuration of the primary treatment train. However, the filters normally are located upstream of the RO units.

The solids accumulating on these filter elements are backwashed to the secondary waste receiving tanks with pulses of compressed air and water, forcing water back through the filter. The backwash operation is initiated either automatically by a rise in differential pressure across the filter or manually by an operator. The filters are cleaned chemically when the backwashing process does not facilitate acceptable filter performance.

Auxiliary fine and rough filters (e.g., disposable filters) have been installed to provide additional filtration capabilities. Depending on the configuration of the ETF, the auxiliary filters are operated either in series with the primary filters to provide additional filtration or in parallel, instead of the primary fine and rough filters, to allow cleaning of the primary fine and rough filters while the primary treatment train is in operation.

Ultraviolet Light/Oxidation. Organic compounds contained in an aqueous waste stream are destroyed in the UV/OX system (Figure 4-7). Hydrogen peroxide is mixed with the waste. The UV/OX system uses the photochemical reaction of UV light on hydrogen peroxide to form hydroxyl radicals and other reactive species oxidize the organic compounds. The final products of the complete reaction are carbon dioxide, water, and inorganic ions.

Organic destruction is accomplished in two UV/OX units operating in parallel. During the UV/OX process, the aqueous waste passes through reaction chambers where hydrogen peroxide is added. While in the UV/OX system, the temperature of an aqueous waste is monitored. Should the temperature of the

waste exceed the upper limits for the UV/OX or RO systems, heat exchangers are used to reduce the temperature of the waste.

pH Adjustment. The pH of a waste stream is monitored and controlled at different points throughout the treatment process. Within the primary treatment train, the pH of a waste can be adjusted with sulfuric acid or sodium hydroxide to optimize operation of downstream treatment processes or adjusted before final discharge. For example, the pH of an aqueous waste would be adjusted in the pH adjustment tank after the UV/OX process and before the RO process. In this example, pH is adjusted to cause certain chemical species such as ammonia to form ammonium sulfate, thereby increasing the rejection rate of the RO.

Hydrogen Peroxide Decomposition. Typically, hydrogen peroxide added into the UV/OX system is not consumed completely by the system. Because hydrogen peroxide is a strong oxidizer, the residual hydrogen peroxide from the UV/OX system is removed to protect the downstream equipment. The hydrogen peroxide decomposer uses activated carbon to break down the hydrogen peroxide that is not consumed completely in the process of organic destruction. The aqueous waste is sent through a column of fluidized activated carbon that breaks down the hydrogen peroxide into water and oxygen. The gas generated by the decomposition of the hydrogen peroxide is vented to the vessel offgas system.

Degasification. The degasification column is used to purge dissolved carbon dioxide from the aqueous waste to reduce the carbonate loading to downstream dissolved solids removal processes within the ETF primary treatment train. The purged carbon dioxide is vented to the vessel offgas system.

Reverse Osmosis. The RO system (Figure 4-8) uses pressure to force clean water molecules through semi-permeable membranes while keeping the larger molecule contaminants, such as dissolved solids, radionuclides, and large molecular weight organic materials, in the membrane. The RO process uses a staged configuration to maximize water recovery. The process produces two separate streams, including a clean 'permeate' and a concentrate (or retentate), which are concentrated as much as possible to minimize the amount of secondary waste produced.

The RO process is divided into first and second stages. Aqueous waste is fed to the first RO stage from the RO feed tank. The secondary waste receiving tanks of the secondary treatment train receive the retentate removed from the first RO stage, while the second RO stage receives the permeate (i.e., 'treated' aqueous waste from the first RO stage). In the second RO stage, the retentate is sent to the first stage RO feed tank while the permeate is sent to the IX system or to the surge tank, depending on the configuration of the ETF.

Two support systems facilitate this process. An anti-scale system injects scale inhibitors as needed into the feed waste to prevent scale from forming on the membrane surface. A clean-in-place system using cleaning agents, such as descalants and surfactants, cleans the membrane pores of surface and subsurface deposits that have fouled the membranes.

Ion Exchange. Because the RO process removes most of the dissolved solids in an aqueous waste, the IX process (Figure 4-9) act as a polishing unit. The IX system consist of three columns containing beds of cation and/or anion resins. This system is designed to allow for regeneration of resins and maintenance of one column while the other two are in operation. Though the two columns generally are operated in series, the two columns also can be operated in parallel or individually.

Typically, the two columns in operation are arranged in a primary/secondary (lead/lag) configuration, and the third (regenerated) column is maintained in standby. When dissolved solids breakthrough the first IX column and are detected by a conductivity sensor, this column is removed from service for regeneration, and the second column replaces the first column and the third column is placed into service. The column normally is regenerated using sulfuric acid and sodium hydroxide. The resulting regeneration waste is collected in the secondary waste receiving tanks.

Should regeneration of the IX resins become inefficient, spent resins are transferred into a disposal container. The container is designed to provide dewatering with remote monitoring of the resin and water levels within the container. Displaced air from the vessels is exhausted through an entrainment separator (to remove water drops) and a high-efficiency particulate air filter and into the vessel offgas system. Free water is removed from the container and returned to the surge tank. Dewatered resins are transferred to a final storage/disposal point.

Verification. The three verification tanks (Figure 4-10) are used to hold the treated effluent while a determination is made that the effluent meets discharge limits. Should a treated effluent not meet Discharge Permit or Final Delisting requirements, the effluent can be returned to the primary treatment train for additional treatment or to the LERF.

The three verification tanks alternate between three operating modes: receiving treated effluent, holding treated effluent during laboratory analysis and verification, or discharging verified effluent. Treated effluent may also be returned to the ETF to provide 'clean' service water for operational and maintenance functions, e.g., for boiler water and for backwashing the filters. This recycling keeps the quantity of fresh water used to a minimum.

4.2.4 Secondary Treatment Train

The secondary treatment system typically receives and processes the following by-products generated from the primary treatment train: concentrate from the first RO stage, filter backwash, regeneration waste from the ion exchange system, and spillage or overflow received into the process sumps. Depending on the operating configuration, however, some aqueous waste could be processed in the secondary treatment train before the primary treatment train (refer to Figures 4-4 and 4-5 for example operating configurations).

The secondary treatment train provides the following processes:

- Secondary waste receiving - tank receiving
- Evaporation - concentrates secondary waste streams
- Concentrate staging - concentrate receipt and pH adjustment in concentrate tanks
- Thin film drying - dewatering of secondary waste streams
- Container handling - packaging of dewatered secondary waste.

Secondary Waste Receiving. Waste to be processed in the secondary treatment train is received into two secondary waste receiving tanks, where the pH can be adjusted with sulfuric acid or sodium hydroxide for optimum evaporator performance.

Evaporation. The ETF evaporator is fed alternately by the two secondary waste receiving tanks. One tank serves as a waste receiver while the other tank is operated as the feed tank. The ETF evaporator vessel (also referred to as the vapor body) is the principal component of the evaporation process (Figure 4-11).

Feed from the secondary waste receiving tanks is pumped through a heater to the recirculation loop of the ETF evaporator. In this loop, concentrated waste is recirculated from the ETF evaporator, to a heater, and back into the evaporator where vaporization occurs. As water leaves the evaporator system in the vapor phase, the concentration of the waste in the evaporator increases. When the concentration of the waste reaches the appropriate density, a portion of the concentrate is pumped to one of the concentrate tanks.

The vapor that is released from the ETF evaporator is routed to the entrainment separator, where water droplets and/or particulates are separated from the vapor. The 'cleaned' vapor is routed to the vapor compressor and heater. The steam from the vapor compressor/heater is used to heat the recirculating concentrate in the ETF evaporator. From the vapor compressor/heater, the steam is condensed and fed to the distillate flash tank, where the saturated condensate received from the heater drops to atmospheric pressure and cools to the normal boiling point through partial flashing (rapid vaporization caused by a pressure reduction). The resulting distillate is routed to the surge tank. Noncondensible vapors, such as air, are exhausted by a vacuum blower to the vessel offgas system.

Concentrate Staging. The concentrate tanks make up the head end of the thin film drying process. From the ETF evaporator, concentrate is pumped into two concentrate tanks and pH adjusted. The concentrate tanks function alternately between concentrate receiver and feed tank for the thin film dryer.

Because low solubility solids (i.e., calcium and magnesium sulfate) tend to settle in the concentrate tanks, these solids must be removed to prevent fouling and to protect the thin film dryer, and to maintain concentrate tank capacity.

Thin Film Drying. From the concentrate tanks, feed is pumped through a preheater to the thin film dryer (Figure 4-12) that is heated by steam. As the concentrated waste flows down the length of the dryer, the waste is dried. The dried film, or powder, is scraped off the dryer cylinder by blades attached to a rotating shaft. The powder is funnelled through a cone-shaped powder hopper at the bottom of the dryer and into the Container Handling System.

Overhead vapor released by the drying of the concentrate is condensed in the distillate condenser. Excess heat is removed from the distillate by a water-cooled heat exchanger. Part of the distillate is circulated back to the condenser spray nozzles. The remaining distillate is pumped to the surge tank. Any noncondensible vapors and particulates from the spray condenser are exhausted to the vessel offgas system.

Container Handling. Before an empty container is moved into the Container Handling System (Figure 4-13), the lids are loosely placed on the containers and the container is placed on a conveyor. After the lid is removed, the containers are moved into the container filling area after passing through an air lock. The empty container is located under the thin film dryer, and raised into position. The container is sealed to the thin film dryer and a rotary valve begins the transfer of powder to the empty container. Air displaced from the container is vented to the entrainment separator attached to the ETF evaporator that exhausts to the vessel offgas system.

The container is filled to a predetermined level, recapped, and moved along the conveyor to the smear station airlock. At the smear station airlock, the container is moved onto the conveyor by remote control. The airlock is opened and the smear sample (surface wipe) is taken and the radionuclide contamination level counted. A 'C' ring is installed to secure the container lid. If the container has contaminated material on the outside, the container is moved to the washdown station and washed. The container wash water drains to sump tank 1. The washed container is air-dried and retested. Filled containers that pass the smear test are labeled, placed on pallets, and moved by forklift to the filled container storage area. Section 4.3 provides a more detailed discussion of container handling.

4.2.5 Other Effluent Treatment Facility Systems

The ETF is provided with support systems that facilitate treatment in the primary and secondary treatment trains and that provide for worker safety and environmental protection. An overview of the following systems is provided:

- Monitor and control system

- Vessel offgas system
- Sump collection system
- Chemical injection feed system
- Verification tank recycle system
- Utilities.

4.2.5.1 Monitor and Control System

The operation of the ETF is monitored and controlled by a centralized computer system (i.e., monitor and control system or MCS). The MCS continuously monitors data from various field indicators, such as pH, flow, tank level, temperature, pressure, conductivity, alarm status, and valve switch positions. Data gathered by the MCS enable operations and engineering personnel to document and adjust the operation of the ETF.

4.2.5.2 Vessel Offgas System

Ventilation for various tanks and vessels is provided through the vessel offgas system. The system includes a moisture separator, duct heater, pre-filter, high-efficiency particulate air filters, carbon adsorber (when required to reduce organic emissions), exhaust fans, and ductwork. Gasses ventilated from the tanks and vessels enter the exhaust system through the connected ductwork. The vessel offgas system draws vapors and gasses off the following tanks and treatment systems:

- Surge tank
- ETF evaporator
- pH adjustment tank
- Concentrate tanks
- Degasification system
- First and second RO stages
- Dry powder hopper
- Effluent pH adjustment tank
- Drum capping station
- Secondary waste receiving tanks
- Resin dewatering system
- Distillate condenser (off the thin film dryer)
- Sump tanks 1 and 2.

The vessel offgas system maintains a negative pressure with respect to the atmosphere, which produces a slight vacuum within tanks, vessels, and ancillary equipment for the containment of gas vapor. This system also provides for the collection, monitoring, and treatment of confined airborne in-vessel contaminants to preclude over-pressurization. The high-efficiency particulate air filters remove particulates and condensate from the air stream before these are discharged to the radiologically controlled heating, ventilation, and air conditioning system.

4.2.5.3 Sump Collection System

Sump tanks 1 and 2 compose the sump collection system that provides containment of waste streams and liquid overflow associated with the ETF processes. The process area floor is sloped to two separate

trenches that each drain to a sump tank located under the floor of the ETF. One trench runs the length of the primary treatment train and drains to sump tank 2 located underneath the verification tank pump floor. The second trench collects spillage primarily from the secondary treatment train and flows to sump tank 1 located near the ETF evaporator. Sump tanks 1 and 2 are located below floor level (Figure 4-14). An eductor in these tanks prevents sludge from accumulating.

4.2.5.4 Chemical Injection Feed System

At several points within the primary and secondary treatment trains, sulfuric acid and sodium hydroxide (or dilute solutions of these reagents) are metered into specific process units to adjust the pH. For example, a dilute solution of 4 percent sulfuric acid and 4 percent sodium hydroxide could be added to the secondary waste receiving tanks to optimize the evaporation process.

4.2.5.5 Verification Tank Recycle System

To reduce the amount of water added to the process, verification tank water (i.e., verified effluent) is recycled throughout the ETF process. The following tanks and ancillary equipment use verification tank water:

- 4% H_2SO_4 solution tank and ancillary equipment
- 4% NaOH solution tank and ancillary equipment
- Clean-in-place tank and ancillary equipment
- ETF evaporator boiler and ancillary equipment
- Thin film dryer boiler and ancillary equipment.

4.2.5.6 Utilities

The ETF maintains the following utility supply systems required for the operation of the ETF:

- Cooling water system - removes heat from process water via heat exchangers and a cooling tower
- Compressed air system - provides air to process equipment and instrumentation
- Seal water system - provides cool, clean, pressurized water to process equipment for pump seal cooling and pump seal lubrication, and provides protection against failure and fluid leakage
- Demineralized water system - removes solids from raw water system to produce high-quality, low ion-content, water for steam boilers, and for the hydrogen peroxide feed system.
- Heating, ventilation, and air conditioning system - provides continuous heating, cooling, and air humidity control throughout the ETF.

The following utilities support ETF activities:

- Electrical power
- Sanitary water
- Communication systems
- Raw water.

4.3 CONTAINERS [D-1]

This section provides specific information on container storage and treatment operations at the ETF, including descriptions of containers, labeling, and secondary containment structures.

A list of dangerous and/or mixed waste managed in containers at the ETF is presented in Chapter 1.0. The types of dangerous and/or mixed waste managed in containers in the ETF could include the following secondary waste generated by the ETF processes:

- Waste generated from the treatment process
- Miscellaneous waste generated by operations and maintenance activities.

The secondary treatment train processes the waste by-products from the primary treatment train, which are concentrated and dried into a powder. Containers are filled with dry powder waste from the thin film dryer via a remotely controlled system. Miscellaneous waste generated from maintenance and operations activities also are stored at the ETF. The waste could include process waste, such as used filter elements; spent RO membranes; damaged equipment; and decontamination and maintenance waste, such as contaminated rags, gloves, and other personal protective equipment. Liquids generally are packaged with absorbents at a 2 to 1 ratio.

Several container collection areas could be located within the ETF process and container handling areas. These collection areas are used only to accumulate waste in containers. Once a container is filled, the container is transferred either to the container storage area (Figure 4-3), to another TSD unit, or to a less-than-90-day storage pad. The container storage area, a 22.9 x 8.5-meter room, is located adjacent to the ETF process area. The containers within the container storage area are clearly labeled, and access to these containers is limited by barriers and by administrative controls. The ETF floor provides secondary containment, and the ETF roof and walls protects all containers from exposure to the elements.

Waste also could be placed in containers for treatment as indicated in Chapter 1.0. For example, sludge that accumulates in the bottoms of the process tanks is removed periodically and placed into containers. In this example, the waste is solidified by decanting the supernate from the container and the remainder of the waste is allowed to evaporate, or absorbents are added, as necessary, to address remaining liquids. Following treatment, this waste either is stored at the ETF or transferred to another TSD unit.

4.3.1 Description of Containers [D-1a]

The containers used to collect and store dry powder waste are 208-liter steel containers. Most of the maintenance and operation waste is stored in 208-liter steel containers; however, in a few cases, the size of the container could vary to accommodate the size of a particular waste. For example, some process waste, such as spent filters, might not fit into a 208-liter container. In the case of spent resin from the IX columns, the resin is dewatered and could be packaged in a special disposal container. In these few cases, specially sized containers could be required. In all cases, however, only approved container are used and are compatible with the associated waste. Typically 208-liter containers are used for treatment.

Current operating practices indicate the use of new 208-liter containers that either have a polyethylene liner or a protective coating. Any reused or reconditioned container is inspected for container integrity before use. Overpack containers are available for use with damaged containers. Overpack containers typically are unlined steel or polyethylene. Per Chapter 1.0, a maximum of 147,630 liters of dangerous and/or mixed waste could be stored in containers in the ETF.

4.3.2 Container Management Practices [D-1b]

Before use, each container is checked for signs of damage such as dents, distortion, corrosion, or scratched coating. For dry powder loading, empty containers on pallets are raised by a forklift and manually placed on the conveyor that transports the containers to the automatic filling station in the container handling room (Figure 4-13). The container lids are removed and replaced automatically during the filling sequence. After filling, containers exit the container handling room via the filled drum

conveyor. Locking rings are installed, the container label is affixed, and the container is moved by dolly or forklift to the container storage area.

Containers used for storing maintenance and operations secondary waste are labeled before being placed in the container storage area or in a collection area. Lids are secured on these containers when not being filled. When the containers in a collection area are full, the containers are transferred by dolly or forklift to the container storage area or to an appropriate TSD unit. Containers used for treating waste also are labeled. The lids on these containers are removed as required to allow for treatment. During treatment, access to these containers is controlled through physical barriers and/or administrative controls.

The filled containers in the container storage area are inventoried, checked for proper labeling, and placed on pallets or in a separate containment devices as necessary. Each pallet is moved by forklift. Within the container storage area, palletized containers are stacked no more then three pallets high and in rows no more than two containers wide. Rows are separated by unobstructed aisles with a minimum of 76-centimeter aisle space.

4.3.3 Container Labeling [D-1c]

Labels are affixed on containers used to store dry powder when the containers leave the container handling room. Labels are affixed on other waste containers before use. Every container is labeled with the date that the container was filled. Appropriate major risk labels, such as "corrosive", "toxic" or "F-listed", also are added. Each container also has a label with an identification number for tracking purposes.

4.3.4 Containment Requirements for Managing Containers [D-1d]

Secondary containment is provided in the container management areas. The secondary containment provided for tank systems also serves the container management areas. This section describes the design and operation of the secondary containment structure for these areas. Detailed drawings of the ETF secondary containment systems are presented in Appendix 4B.

4.3.4.1 Secondary Containment System Design [D-1d(1)(a)]

For the container management areas, secondary containment is provided by the reinforced concrete floor and a 15.2-centimeter rise (berm) along the walls of the container storage area of the ETF. The engineering assessment required for tanks (Mausshardt 1995) also describes the design and construction of the secondary containment provided for the ETF container management areas. All systems were designed to national codes and standards (e.g., American Society for Testing Materials, American Concrete Institute standards).

The floor in composed of cast-in-place and pre-formed concrete slabs and has a minimum thickness of 15.2 centimeters. All slab joints and floor and wall joints have waterstops installed at the mid-depth of the slab. In addition, filler was applied to each joint. The floor and berms are coated with a chemically resistant, high-solids epoxy coating system consisting of primer, filler, and top coating. This coating material is compatible with the waste managed in containers and is an integral part of the secondary containment system for containers.

The floor is sloped to drain any solution in the container storage area to floor drains along the west wall. Each floor drain consists of a grating over an 20.3-centimeter drain port connected to a 4-inch stainless steel transfer pipe. The pipe passes under this wall and connects to a trench running along the east wall of the adjacent process area. This trench drains solution to sump tank 1.

The container storage area is separated from the process area by a common wall and a door for access to the two areas (Figure 4-2). These two areas also share a common floor and trenches that, with the

15.2-centimeter rise of the containing walls, form the secondary containment system for the process area and the container storage area.

4.3.4.1.1 Structural Integrity of Base [D-1d(1)(b)]

Engineering calculations were performed showing the floor of the container storage area is capable of supporting the weight of containers. These calculations were reviewed and certified by a professional engineer (Mausshardt 1995). The concrete was inspected for damage during construction. Cracks were identified and repaired to the satisfaction of the professional engineer. Documentation of these certifications is included in the engineering assessment (Mausshardt 1995) and a copy of the certification is provided in Appendix 4C.

4.3.4.1.2 Containment System Capacity [D-1d(1)(c)]

The container storage area is primarily used to store dry powder and maintenance and operation waste. Where appropriate, absorbents are added to fix any trace liquids present. Large volumes of liquid are not stored in the container storage area. However, liquids might be present in those containers that are in the treatment process. The maximum volume of waste that can be stored in containers in the container storage area is 147,630 liters.

Both the process area and the container storage area are considered in the containment system capacity. The volume available for secondary containment in the process area is approximately 68,000 liters, as discussed in the engineering assessment (Mausshardt 1995). Using the dimensions of the container storage area (22.9 by 8.5 by 0.15 meters), and assuming that 50 percent of the floor area is occupied by containers, the volume of the container storage area is 14,900 liters. The combined volume of both the container storage and process areas available for secondary containment, therefore, is 82,900 liters. This volume is greater than 10 percent of the maximum total volume of containers allowed for storage in the ETF, as discussed previously.

4.3.4.1.3 Control of Run-on [D-1d(1)(d)]

The container management areas are located within the ETF, which serves to prevent run-on of precipitation.

4.3.4.2 Removal of Liquids from Containment Systems [D-1d(2)]

The container storage area is equipped with drains that route solution to a trench in the process area which drains to sump tank 1. The sump tanks are equipped with alarms that notify operating personnel that a leak is occurring. The sump tanks also are equipped with pumps to transfer waste to the surge tank or the secondary treatment train.

4.3.4.3 Prevention of Ignitible, Reactive, and Incompatible Wastes in Containers [D-1f]

Individual waste types, i.e., ignitable, corrosive, and reactive, are stored in separate containers. A waste that could be incompatible with other wastes is separated and protected from the incompatible waste. For example, acidic and caustic wastes are stored in separate containers. Free liquids are absorbed in containers that hold incompatible waste at a 2 to 1 ratio. Additionally, ETF-specific packaging requirements for these types of waste provide extra containment with each individual container. For example, each item of acidic waste is individually bagged and sealed within a lined container.

4.4 TANK SYSTEMS [D-2]

This section provides specific information on tank systems and process units. This section also includes a discussion on the types of waste to be managed in the tanks, tanks design information, integrity

assessments, and additional information on the ETF tanks that treat and store dangerous and/or mixed waste. Detailed drawings of the ETF tank systems are provided in Appendix 4B. The ETF dangerous waste tanks are identified in Section 4.4.1.1, and the relative locations of the tanks and process units in the ETF are presented in Figure 4-3.

4.4.1 Design Requirements [D-2a(1)]

The following sections provide an overview of the design specifications for the tanks within the ETF. A separate discussion on the design of the process units also is provided. In accordance with the new tank system requirements of WAC 173-303-640(3), the following tank components and specifications were assessed:

- Dimensions, capacities, wall thicknesses, and pipe connections
- Materials of construction and linings and compatibility of materials with the waste being processed
- Materials of construction of foundations and structural supports
- Review of design codes and standards used in construction
- Review of structural design calculations, including seismic design basis
- Waste characteristics and the affects of waste on corrosion.

This assessment was documented in the *Final RCRA Information Needs Report* (Mausshardt 1995), the engineering assessment performed for the ETF tank systems by an independent professional engineer. A similar assessment of design requirements was performed for the load-in tanks and is documented in *200 Area Effluent BAT/AKART Implementation, ETF Truck Load-In Facility, Project W-291H Integrity Assessment Report* (KEH 1994).

The specifications for the preparation, design, and construction of the tanks systems at the ETF are documented in the *Design Construction Specification, Project C-018H, 242-A Evaporator/PUREX Plant Process Condensate Treatment Facility* (WHC 1992a). The preparation, design, and construction of the load-in tanks are provided in the construction specifications in *Project W-291, 200 Area Effluent BAT/AKART Implementation ETF Truck Load-in Facility* (KEH 1994).

Most of the tanks in the ETF are constructed of stainless steel. According to the design of the ETF, it was determined that stainless steel would provide adequate corrosion protection for these tanks. Exceptions include the verification tanks, which are constructed of carbon steel with an epoxy coating. The ETF evaporator/vapor body (and the internal surfaces of the thin film dryer) are constructed of a corrosion resistant alloy, known as alloy 625, to address the specific corrosion concerns in the secondary treatment train. Finally, the hydrogen peroxide decomposer vessels are constructed of carbon steel and coated with a vinyl ester lining.

The shell thicknesses of the tanks identified in this table represent a nominal thickness of a new tank when placed into operation. The tank capacities identified in this table represent the maximum operating volumes. For certain tanks (as indicated in the table), the maximum operating volume is also the nominal (routine) operating capacity. Nominal tank volumes represent the volume between the low-level and high-level shutoffs in a tank unit.

Dangerous and/or mixed waste that can be treated or stored in the ETF tanks is presented in Chapter 1.0. Aqueous waste, in addition to process condensate, that is treated and stored at the LERF and ETF includes, but is not limited to, the following: contaminated groundwater from pump-and-treat remediation activities such as groundwater from the 200-UP-1 Operable Unit; water from deactivation activities such as water from the spent fuel storage basins at deactivated reactors (e.g., N Reactor);

laboratory aqueous waste from unused samples and sample analyses; and leachate from landfills, such as the Environmental Restoration Disposal Facility.

Before accepting a new aqueous waste stream at the LERF or ETF, an evaluation of the waste characteristics is performed to determine the treatability of the aqueous waste, including the potential to corrode the ETF tanks. This acceptance evaluation is discussed in the waste analysis plan (Appendix 3A). If the evaluation indicates a new aqueous waste stream would significantly increase corrosion rates, processing actions are initiated to reduce corrosion. These actions might include blending the aqueous waste with other aqueous waste or adjusting the pH of the aqueous waste to reduce corrosion.

4.4.1.1 Codes and Standards for Tank System Construction

Specific standards for the manufacture of tanks and process systems installed in the ETF are briefly discussed in the following sections. In addition to these codes and industrial standards, a seismic analysis for each tank and process system is required [WAC 173-303-806(4)(a)(xi)]. The seismic analysis is performed in accordance with UCRL-15910 *Design and Evaluation Guidelines for Department of Energy Facilities Subjected to Natural Phenomena Hazards*, Section 4 (UCRL 1987). The results of the seismic analyses are summarized in the engineering assessment of the ETF tank systems (Mausshardt 1995).

Storage and Treatment Tanks. The following tanks store and/or treat dangerous waste at the ETF.

Tank name	Tank number
Surge tank	2025E-60A-TK-1
pH adjustment tank	2025E-60C-TK-1
Effluent pH adjustment tank	2025E-60C-TK-2
First RO feed tank	2025E-60F-TK-1
Second RO feed tank	2025E-60F-TK-2
Verification tanks (three)	2025E-60H-TK-1A/1B/1
Secondary waste receiving tanks (two)	2025E-60I-TK-1A/1B
Concentrate tanks (two)	2025E-60J-TK-1A/1B
Sump tanks (two)	2025E-20B-TK-1/2
Distillate flash tank	2025E-60I-TK-2
Load-in tanks	TK-109/117

The relative location of these tanks is presented in Figure 4-3. These tanks are maintained at or near atmospheric pressure. The codes and standards applicable to the design, construction, and testing of the above tanks and ancillary piping systems are as follows:

ASME - B31.3	Chemical Plant and Petroleum Refinery Piping (ASME 1990)
ASME Sect. VIII, Division I	Pressure Vessels (ASME 1992a)
AWS - D1.1	Structural Welding Code - Steel (AWS 1992)
ANSI - B16.5	Pipe Flanges and Flanged Fittings (ANSI 1992)
ASME Sect. IX	Welding and Brazing Qualifications (ASME 1992b)

API 620	Design and Construction of Large Welded Low Pressure Storage Tanks (API 1990)
AWWA - D100	Welded Steel Tanks for Water Storage (AWWA 1989)
AWWA - D103	Factory-Coated Bolted Steel Tanks for Water Storage (AWWA 1987)
AWWA - D120	Thermosetting Fiberglass-Reinforced Plastic Tanks (AWWA 1984).

The application of these standards to the construction of ETF tanks and independent verification of completed systems ensured that the tank and tank supports had sufficient structural strength and that seams and connections were adequate to ensure tank integrity. In addition, each tank met strict quality assurance requirements. Each tank constructed offsite was tested for integrity and leak tightness before shipment to the Hanford Facility. Following installation, the systems were inspected for damage to ensure against leakage and to verify proper operation. If a tank was damaged during shipment or installation, leak tightness testing was repeated onsite.

4.4.1.2 Design Information for Tanks Located Outside of Effluent Treatment Facility

The load-in tanks, surge tank, and verification tanks are located outside the ETF. These tanks are located within concrete structures that provide secondary containment.

Load-In Tanks and Ancillary Equipment. The load-in tanks are constructed of stainless steel, are heated, and have a nominal capacity of 37,900 liters. Ancillary equipment includes transfer pumps, a filtration system, a double-encased, fiberglass transfer pipeline, level instruments for tanker trucks, and leak detection equipment. From the Load-In Station, aqueous waste can be routed to the surge tank or to the LERF through a double-encased line. The load-in tanks, sump, pumps, and truck pad are all provided with secondary containment.

Surge Tank and Ancillary Equipment. The surge tank is constructed of stainless steel and has a nominal capacity of 379,000 liters. Ancillary equipment to the surge tank includes two underground double-encased (i.e., pipe-within-a-pipe) transfer lines connecting to LERF and three pumps for transferring aqueous waste to the primary treatment train. The surge tank is located at the south end of the ETF. The surge tank is insulated and the contents heated to prevent freezing. Eductors in the tank provide mixing.

Verification Tanks and Ancillary Equipment. The verification tanks are located north of the ETF. The verification tanks have a nominal capacity of 2,540,000 liters each. For support, the tanks have a center post with a webbing of beams that extend from the center post to the sides of the tank. The roof is constructed of epoxy covered carbon steel that is attached to the cross beams of the webbing. The tank floor also is constructed of epoxy covered carbon steel and is sloped. Eductors are installed in each tank to provide mixing.

Ancillary equipment includes a return pump that provides circulation of treated effluent through the eductors. The return pump also recycles effluent back to the ETF for retreatment and can provide service water for ETF functions. Two transfer pumps are used to discharge treated effluent to SALDS or back to the LERF.

4.4.1.3 Design Information for Tanks Located Inside the Effluent Treatment Facility Building

Most of the ETF tanks and ancillary equipment that store or treat dangerous and/or mixed waste are located within the ETF. The structure serves as secondary containment for the tank systems.

pH Adjustment Tank and Ancillary Equipment. The pH adjustment tank has a nominal capacity of 9,800 liters. Ancillary equipment for this tank includes overflow lines to a sump tank and pumps to transfer waste to other units in the main treatment train.

Effluent pH Adjustment Tank and Ancillary Equipment. The effluent pH adjustment tank has a nominal capacity of 9,500 liters. Ancillary equipment includes overflow lines to a sump tank and pumps to transfer waste to the verification tanks.

First and Second Reverse Osmosis Feed Tanks and Ancillary Equipment. The first RO feed tank is a vertical, stainless steel tank with a round bottom and has a nominal capacity of 11,400 liters. Conversely, the second RO feed tank is a rectangular vessel with the bottom of the tank sloping sharply to a single outlet in the bottom center. The second RO feed tank has a nominal capacity of 7,600 liters. Each RO tank has a pump to transfer waste to the RO arrays. Overflow lines are routed to a sump tank.

Secondary Waste Receiving Tanks and Ancillary Equipment. Two 57,000-liter secondary waste receiving tanks collect waste from the units in the main treatment train, such as reject solution (retentate) from the RO units and regeneration solution from the IX columns. These are vertical, cylindrical tanks with a semi-elliptical bottom and a flat top. Ancillary equipment includes overflow lines to a sump tank and pumps to transfer aqueous waste to the ETF evaporator.

Effluent Treatment Facility Evaporator and Ancillary Equipment. The ETF evaporator, the principal component of the evaporation process, is a cylindrical pressure vessel with a conical bottom. Aqueous waste is fed into the lower portion of the vessel. The top of the vessel is domed and the vapor outlet is configured to prevent carryover of liquid during the foaming or bumping (violent boiling) at the liquid surface. The ETF evaporator has a capacity of approximately 21,000 liters.

The ETF evaporator includes the following ancillary equipment:

- Preheater
- Recirculation pump
- Waste heater with steam level control tank
- Concentrate transfer pump
- Entrainment separator
- Vapor compressor with silencers
- Silencer drain pump.

Distillate Flash Tank and Ancillary Equipment. The distillate flash tank is a horizontal tank that has an nominal operating capacity of 570 liters. Ancillary equipment includes a pump to transfer the distillate to the surge tank for reprocessing.

Concentrate Tanks and Ancillary Equipment. Each of the two concentrate tanks has an approximate capacity of 18,900 liters. Ancillary equipment includes overflow lines to a sump tank and pumps for recirculation and transfer.

Sump Tanks. Sump tanks 1 and 2 are located below floor level. Both sump tanks are double-walled, rectangular tanks, placed inside concrete vaults. Both tanks have a working volume of 3,000 liters each. The sump tanks are located in pits belowgrade to allow gravity drain of solutions to the tanks. Each sump tank has two vertical pumps for transfer of waste to the secondary waste receiving tanks or to the surge tank for reprocessing.

4.4.1.4 Design Information for Effluent Treatment Facility Process Units

As with the ETF tanks, process units that treat and/or store dangerous and/or mixed waste are maintained at or near atmospheric pressure. These units were constructed to meet a series of design standards, as discussed in the following sections. Table 4-2 presents the materials of construction and the ancillary equipment associated with these process units. All piping systems are designed to withstand the effects of internal pressure, weight, thermal expansion and contraction, and any pulsating flow. The design and integrity of these units are presented in the engineering assessment (Mausshardt 1995).

Filters. The load-in, fine and rough filter vessels (including the auxiliary filters) are designed to comply with the ASME Section VIII, Division I, Pressure Vessels (ASME 1992a). The application of these standards to the construction of the ETF filter system and independent inspection ensure that the filter and filter supports have sufficient structural strength and that the seams and connections are adequate to ensure the integrity of the filter vessels.

Ultraviolet Oxidation System. The UV/OX reaction chamber is designed to comply with manufacturers standards.

Degasification System. The codes and standards applicable to the design, fabrication, and testing of the degasification column are identified as follows:

- ASME Section VIII, Division I, Pressure Vessels (ASME 1992a)
- ASME - B31.3, Chemical Plant and Petroleum Refinery Piping (ASME 1990)
- AWS - D1.1, Structural Welding Code - Steel (AWS 1992)
- ANSI - B16.5, Pipe Flanges and Flanged Fittings (ANSI 1992).

Reverse Osmosis System. The pressure vessels in the RO unit are designed to comply with ASME Section VIII, Division I, Pressure Vessels (ASME 1992a), and applicable codes and standards.

Ion Exchange (Polishers). The IX columns are designed in accordance with ASME Section VIII, Division I, Pressure Vessels (ASME 1992a), and applicable codes and standards. Polisher piping is fabricated of type 304 stainless steel or polyvinyl chloride (PVC) and meets the requirements of ASME B31.3, Chemical Plant and Petroleum Refinery Piping (ASME 1990).

Effluent Treatment Facility Evaporator. The ETF evaporator is designed to meet the requirements of ASME Section VIII, Division I, Pressure Vessels (ASME 1992a), and applicable codes and standards. The ETF evaporator piping meets the requirements of ASME B31.3, Chemical Plant and Petroleum Refinery Piping (ASME 1990).

Thin Film Dryer System. The thin film dryer is designed to meet the requirements of ASME Section VIII, Division I, Pressure Vessels (ASME 1992a), and applicable codes and standards. The piping meets the requirements of ASME - B31.3, Chemical Plant and Petroleum Refinery Piping (ASME 1990).

4.4.2 Integrity Assessments [D-2a(2)]

The integrity assessment for ETF (Mausshardt 1995) attests to the adequacy of design and integrity of the tanks and ancillary equipment to ensure that the tanks and ancillary equipment will not collapse, rupture, or fail over the intended life considering intended uses. For the load-in tanks, a similar integrity assessment was performed (KEH 1995). Specifically, the assessment documents the following considerations:

- Adequacy of the standards used during design and construction of the facility
- Characteristics of the solution in each tank

- Adequacy of the materials of construction to provide corrosion protection from the solution in each tank
- Results of the leak tests and visual inspections.

The results of these assessments demonstrate that tanks and ancillary equipment have sufficient structural integrity and are acceptable for storing and treating dangerous and/or mixed waste. The assessments also state that the tanks and building were designed and constructed to withstand a design-basis earthquake. These tank assessments were certified by independent, qualified registered professional engineers.

The scope of the ETF tank integrity assessment was based on characterization data from process condensate. To assess the effect that other aqueous waste might have on the integrity of the ETF tanks, the chemistry of an aqueous waste will be evaluated for its potential to corrode a tank (e.g., chloride concentrations will be evaluated). The tank integrity assessment for the load-in tanks was based on characterization data from several aqueous waste streams. The chemistry of an aqueous waste stream not considered in the load-in tank integrity assessment also will be evaluated for the potential to corrode a load-in tank.

Consistent with the recommendations of the integrity assessment, a corrosion inspection program was developed. Periodic integrity assessments are scheduled for those tanks that are predicted to have the highest potential for corrosion. These inspections are scheduled annually or longer to follow the end of a treatment campaign. These 'indicator tanks' include the concentrate tanks, secondary waste receiving tanks, and verification tanks. One of each of these tanks will be inspected yearly to determine if corrosion or coating failure has occurred. Should significant corrosion or coating failure be found, an additional tank of the same type will be inspected during the same year. In the case of the verification tanks, if corrosion or coating failure is found in the second tank, the third tank also will be inspected. If significant corrosion is observed in all three sets of indicator tanks, the balance of the ETF tanks would be considered for inspection. For tanks predicted to have lower potential for corrosion, inspections also are performed nonroutinely as part of the corrective maintenance program.

4.4.3 Additional Requirements for New Tanks [D-2a(4)]

Procedures for proper installation of tanks, tank supports, piping, concrete, etc., are included in *Construction Specification, Project C-018H, 242-A Evaporator/PUREX Plant Process Condensate Treatment Facility* (WHC 1992a). For the load-in tanks, procedures are included in the construction specifications in *Project W-291, 200 Area Effluent BAT/AKART Implementation ETF Truck Load-in Facility* (KEH 1994). Following installation, the tanks and secondary containment were inspected by an independent, qualified, registered professional engineer. Deficiencies identified included damage to the surge tank, damage to the verification tank liners, and ETF secondary containment concrete surface cracking. All deficiencies were repaired to the satisfaction of the engineer. The tanks and ancillary equipment were leak tested as part of acceptance of the system from the construction contractor. Information on the inspections and leak tests are included in the engineering assessment (Mausshardt 1995). No deficiencies were identified during installation of the load-in tanks and ancillary equipment.

4.4.4 Secondary Containment and Release Detection for Tank Systems [D-2b]

This section describes the design and operation of secondary containment and leak detection systems at the ETF.

4.4.4.1 Secondary Containment Requirements for All Tank Systems [D-2b(1)]

The specifications for the preparation, design, and construction of the secondary containment systems at the ETF are documented (WHC 1992a). The preparation, design, and construction of the secondary containment for the load-in tanks are provided in the construction specifications (KEH 1994). All systems were designed to national codes and standards. Constructing the ETF per these specifications ensured that foundations are capable of supporting tank and secondary containment systems and that uneven settling and failures from pressure gradients should not occur.

4.4.4.1.1 Common Elements

The following text describes elements of secondary containment that are common to all ETF tank systems. Details on the secondary containment for specific tanks, including leak detection systems and liquids removal, are provided in Section 4.4.5.1.

Foundation and Construction. For the tanks within the ETF, except for the sump tanks, secondary containment is provided by a coated concrete floor and a 15.2-centimeter rise (berm) along the containing walls. The double-wall construction of the sump tanks provides secondary containment. Additionally, trenches are provided in the floor that also provide containment and drainage of any liquid to a sump pit. For tanks outside the ETF, secondary containment also is provided with coated concrete floors in a containment pit (load-in tanks) or surrounded by concrete dikes (the surge and verification tanks).

The transfer piping that carries aqueous waste into the ETF is pipe-within-a-pipe construction, and is buried approximately 1.2 meters below ground surface. The pipes between the verification tanks and the verification tank pumps within the ETF are located in a concrete pipe trench.

For the purpose of this discussion, there are five discrete secondary containment systems associated with the following tanks and ancillary equipment that treat or store dangerous and/or waste:

- Load-in tanks
- Surge tank
- Process area (including sump tanks)
- Verification tanks
- Transfer piping and pipe trenches.

All of the secondary containment systems are designed with reinforcing steel and base and berm thickness to minimize failure caused by pressure gradients, physical contact with the waste, and climatic conditions. Classical theories of structural analysis, soil mechanics, and concrete and structural steel design were used in the design calculations for the foundations and structures. These calculations are maintained at the ETF. In each of the analyses, the major design criteria from the following documents were included:

- V-C018HC1-001 — Design Construction Specification, Project C-018H, 242A Evaporator/PUREX Plant Process Condensate Treatment Facility (WHC 1992a)
- DOE Order 6430.1A — General Design Criteria
- SDC-4.1 — Standard Architectural-Civil Design Criteria, Design Loads for Facilities (DOE-RL 1988)
- UCRL-15910 — Design and Evaluation Guidelines for Department of Energy Facilities Subjected to Natural Phenomena Hazards (UCRL 1987)

- UBC-91 Uniform Building Code, 1991 Edition (ICBO 1991).

The design and structural analysis calculations substantiate the structural designs in the referenced drawings. The conclusions drawn from these calculations indicate that the designs are sound and that the specified structural design criteria were met. This conclusion is verified in the independent design review that was part of the engineering assessment (Mausshardt 1995).

Containment Materials. The concrete floor consists of cast-in-place and preformed concrete slabs. All slab joints and floor and wall joints have waterstops installed at the mid-depth of the slab. In addition, filler was applied to each joint.

Except for the sump tank vaults, all of the concrete surfaces in the secondary containment system, including berms, trenches, and pits, are coated with a chemical-resistant, high-solids, epoxy coating that consists of a primer, filler, and a top coating. This coating material is compatible with the waste being treated, and with the sulfuric acid, sodium hydroxide, and hydrogen peroxide additives to the process. The coating protects the concrete from contact with any chemical materials that might be harmful to concrete and prevents the concrete from being in contact with waste material. Table 4-3 summarizes the specifics types of filler, primer, second, and finish coats specified for the concrete and masonry surfaces in the ETF. The epoxy coating is considered integral to the secondary containment system for the tanks and ancillary equipment.

The concrete containment systems are maintained such that any cracks, gaps, holes, and other imperfections are repaired in a timely manner. Thus, the concrete containment systems do not allow spilled liquid to reach soil or groundwater. There are a number of personnel doorways and vehicle access points into the ETF process area. Releases of any spilled or leaked material to the environment from these access points are prevented by a 15.2-centimeter concrete curbs, sloped areas of the floor (e.g., truck ramp), or trenches.

Containment Capacity and Maintenance. Each of these containment areas is designed to contain more than 100 percent of the volume of the largest tank in each respective system. Secondary containment systems for the surge tank, and the verification tanks, which are outside the ETF, also are large enough to include the additional volume from a 100-year, 24-hour storm event; i.e., 5.3 centimeters of precipitation.

Sprinkler System. The sprinkler system within the ETF supplies fire water protection to the process area and the container storage area. This system is connected to a sitewide water supply system and has the capacity to supply sufficient water to suppress a fire at the ETF. However, in the event of failure, the sprinkler system can be hooked up to another water source (e.g., tanker truck).

4.4.4.1.2 Specific Containment Systems

The following discussion presents a description of the individual containment systems associated with specific tank systems.

Load-In Tank Secondary Containment. The load-in tanks are mounted on a 46-centimeter-thick reinforced concrete slab (Drawing H-2-817970, Appendix 4B). Secondary containment is provided by a pit with 30.5-centimeter-thick walls and a floor constructed of reinforced concrete. The load-in tank pit is sloped to drain solution to a sump. The depth of the pit varies with the slope of the floor, with an average thickness of about 1.1 meters. The volume of the secondary containment is about 79,000 liters, which is capable of containing the volume of at least one load-in tank (i.e., 37,800 liters). Leaks are detected by a leak detector that alarms locally and in the ETF control room and by visual inspection of the secondary containment.

Adjacent to the pit is a 25.4-centimeter-thick reinforced concrete pad that serves as secondary containment for the load-in tanker trucks, containers, transfer pumps, and filter system. The pad is

15.2 centimeters below grade with north and south walls gently sloped to allow truck access. The pad has drain pipes to route waste solution to the adjacent load-in tank pit.

Surge Tank Secondary Containment. The surge tank is mounted on a reinforced concrete ringwall. Inside the ringwall, the flat-bottomed tank is supported by a bed of compacted sand and gravel with a high-density polyethylene liner bonded to the ringwall. The liner prevents galvanic corrosion between the soil and the tank. The secondary containment is reinforced concrete with a 15.2-centimeter thick floor and a 20.3-centimeter thick dike. The secondary containment area shares part of the southern wall of the main process area. The dike extends up 2.9 meters to provide a containment volume of 740,000 liters for the 379,000 liter surge tank.

The floor of the secondary containment slopes to a sump in the northwest corner of the containment area. Leaks into the secondary containment are detected by level instrumentation in the sump, which alarms in the ETF control room, and/or by routine visual inspections. A sump pump is used to transfer solution in the secondary containment to a sump tank.

Process Area Secondary Containment. The process area contains the tanks and ancillary equipment of the primary and secondary treatment trains, and has a jointed, reinforced concrete slab floor. The concrete floor of the process area provides the secondary containment. This floor is a minimum of 15.2 centimeters thick. With door sills 15.2 centimeter high, the process area has a containment volume of 76,200 liters. The largest tanks in the process area are the secondary waste receiving tanks, which each have a maximum capacity of 56,800 liters.

The floor of the process area is sloped to drain liquids to two trenches that drain to a sump. Each trench is approximately 38.1 centimeters wide with a sloped trough varying from 39.4 to 76.2 centimeters deep. Leaks into the secondary containment are detected by routine visual inspections of the floor area near the tanks, ancillary equipment, and in the trenches.

The northwest corner of the process area consists of a pump pit containing the pumps and piping for transferring treated effluent from the verification tanks to SALDS. The pit is built 1.37 meters below the process area floor level and is sloped to drain to a trench built along its north wall that routes liquid to sump tank 1. Leaks into the secondary containment of the pump pit are detected by routine visual inspections.

Sump Tanks. The sump tanks support the secondary containment system, and collect waste from several sources, including:

- Process area drain trenches
- Tank overflows and drains
- Container washing water
- Resin dewatering solution
- Steam boiler blowdown
- Sampler system drains.

These double-contained tanks are located within unlined, concrete vaults. The sump tank levels are monitored by remote level indicators or through visual inspections from the sump covers. These indicators are connected to high- and low-level alarms that are monitored in the control room. When a high-level alarm is activated, a pump is activated and the sump tank contents usually are routed to the secondary treatment train for processing. The contents also could be routed to the surge tank for treatment in the primary treatment train. In the event of an abnormally high inflow rate, a second sump pump is initiated automatically.

Verification Tank Secondary Containment. The three verification tanks are each mounted on ringwalls with high-density polyethylene liners similar to the surge tank. The secondary containment for the three tanks is reinforced concrete with a 15.2-centimeter thick floor and a 20.3-centimeter thick dike. The dike extends up 2.6 meters to provide a containment of 110 percent of the capacity of a single tank (i.e., 2,800,000 liters).

The floor of the secondary containment slopes to a sump along the southern wall of the dike. Leaks into the secondary containment are detected by level instrumentation in the sump that alarms in the control room and/or by routine visual inspections. A sump pump is used to transfer solution in the secondary containment to a sump tank.

4.4.4.2 Additional Requirements for Specific Types of Systems [D-2b(2)]

This section addresses additional requirements in WAC 173-303-640 for double-walled tanks like the sump tanks and secondary containment for ancillary equipment and piping associated with the tank systems.

4.4.4.2.1 Double-Walled Tanks [D-2b(2)(b)]

The sump tanks are the only tanks in the ETF classified as 'double-walled' tanks. These tanks are located in unlined concrete vaults and support the secondary containment system for the process area. The sump tanks are equipped with a leak detector between the walls of the tanks that provide continuous monitoring for leaks. The leak detector provides immediate notification through an alarm in the control room. The inner tanks are contained completely within the outer shells. The tanks are contained completely within the concrete structure of the ETF so corrosion protection from external galvanic corrosion is not necessary.

4.4.4.2.2 Ancillary Equipment [D-2b(2)(c)]

The secondary containment provided for the tanks and process systems also serves as secondary containment for the ancillary equipment associated with these systems.

Ancillary Equipment. Section 4.4.5.1 describes the secondary containment systems that also serve most of the ancillary equipment within the ETF. Between the ETF and the verification tanks, a pipeline trench provides secondary containment for four pipelines connecting the transfer pumps (i.e., discharge and return pumps) in the ETF with the verification tanks (Figure 4-1). This concrete trench crosses under the road and extends from the verification tank pumps to the verification tanks. Treated effluent flows through these pipelines from the verification tank pumps to the verification tanks. The return pump is used to return effluent to the ETF for use as service water or for reprocessing.

For all of the ancillary equipment housed within the ETF, the concrete floor, trenches, and berms form the secondary containment system. For the ancillary equipment of the surge tank and the verification tanks, secondary containment is provided by the concrete floors and dikes associated with these tanks. The concrete floor and pit provide secondary containment for the ancillary equipment of the load-in tanks.

Transfer Piping and Pipe Trenches. The two buried transfer lines between LERF and the surge tank have secondary containment in a pipe-within-a-pipe arrangement. The 4-inch transfer line has an 8-inch outer pipe, while the 3-inch transfer line has a 6-inch outer pipe. The pipes are fiberglass and are sloped towards the surge tank. The outer piping ends with a drain valve in the surge tank secondary containment.

These pipelines are equipped with leak detection located in the annulus between the inner and outer pipes, which have the ability to continuously 'inspect' the pipelines during aqueous waste transfers. The alarms on the leak detection system are monitored in the control room. In the event that these leak

detectors are not in service, the pipelines are inspected during transfers by opening a drain valve to check for solution in the annular space between the inner and outer pipe.

The 3-inch transfer line between the load-in tanks and the surge tank has a 6-inch outer pipe in a pipe-within-a-pipe arrangement. The piping is made of fiberglass reinforced plastic and slopes towards the load-in tank secondary containment pit. The drain valve and leak detection system for the load-in tank pipelines are operated similarly to the leak detection system for the LERF to ETF pipelines.

As previously indicated, there are four reinforced concrete pipe trenches that provide secondary containment for piping under the roadway between the ETF and the verification tanks. Each trench is 1.2 meters wide and 0.76 meter deep and slopes towards the sump containing the transfer pumps to SALDS. The floor of the trenches are 30.5 centimeters thick and the sides are 15.2 centimeters thick. The concrete trenches are coated with water sealant and covered with metal gratings at ground level to allow vehicle traffic on the roadway.

4.4.5 Tank Management Practices [D-2d]

When an aqueous waste stream is identified for treatment or storage at ETF, the generating unit is required to characterize the waste. Based on characterization data, the waste stream is evaluated to determine if the stream is acceptable for treatment or storage. Specific tank management practices are discussed in the following sections.

4.4.5.1 Rupture, Leakage, Corrosion Prevention

Most aqueous waste streams can be managed such that corrosion would not be a concern. For example, an aqueous waste stream with high concentrations of chloride might cause corrosion problems when concentrated in the secondary treatment train. One approach is to adjust the corrosion control measures in the secondary treatment train. An alternative might be to blend this aqueous waste in a LERF basin with another aqueous waste that has sufficient dissolved solids, such that the concentration of the chlorides in the secondary treatment train would not pose a corrosion concern.

Additionally, the materials of construction used in the tanks systems (Table 4-1) make it unlikely that a aqueous waste would corrode a tank. For more information on corrosion prevention, refer to the waste analysis plan (Appendix 3A).

When a leak in a tank system is discovered, the leak is immediately contained or stopped by isolating the leaking component. Following containment, the leaking tank system is evaluated by facility personnel to determine whether continued operation of affected system would jeopardize the safety of plant personnel, result in a release to the environment, or compromise facility equipment. If it is determined that a leak could have the aforementioned consequences, the affected system will be immediately removed from service until repairs can be implemented. If a leak would not result in the stated consequences, the tank system will be placed on a maintenance schedule for repair.

4.4.5.2 Overfilling Prevention

Operating practices and administrative controls used at the ETF to prevent overfilling a tank are discussed in the following paragraphs. The ETF process is controlled by the MCS. The MCS monitors liquid levels in the ETF tanks and has alarms that annunciate on high-liquid level to notify operators that actions must be taken to prevent overfilling of these vessels. As an additional precaution to prevent spills, many tanks are equipped with overflow lines that route solutions to sump tanks 1 and 2. These tanks include the pH adjustment tank, RO feed tanks, effluent pH adjustment tank, secondary waste receiving tanks, and concentrate tanks.

The following section discusses feed systems, safety cutoff devices, bypass systems, and pressure controls for specific tanks and process systems.

Tanks. All tanks are equipped with liquid level sensors that give a reading of the tank liquid volume. The surge tank, the verification tanks, the RO tanks, the secondary waste receiving tanks, and the concentrate tanks are equipped further with liquid level alarms that are actuated if the liquid volume is near the tank overflow capacity. In the actuation of the surge tank alarm, a liquid level switch trips, sending a signal to the valve actuator on the tank influent lines, causing the influent valves to close.

The operating mode for each verification tank, i.e., receiving, holding, or discharging, can be designated through the MCS; modes also switch automatically. When the high-level set point on the receiving verification tank is reached, the flow to this tank is diverted and another tank becomes the receiver. The full tank is switched into verification mode. The third tank is reserved for discharge mode.

The liquid levels in the first and second RO feed tanks are maintained within predetermined operating ranges. Should the second RO feed tank overflow, the excess waste is piped along with any leakage from the feed pump to a sump tank.

When waste in a secondary waste receiving tank reaches the high-level set point, the influent flow of waste is redirected to the second tank and the first tank becomes the feed tank for the ETF evaporator.

In a similar fashion, the concentrate tanks switch modes when the high-level set point of one tank is reached. The other tank switches from a discharging mode to a receiving mode and the first tank becomes the discharge tank feeding waste to the thin film dryer.

Filter Systems. All filters at ETF (i.e., the Load-In Station, rough, fine and auxiliary filter systems) are in leak-tight steel casings. For the rough and fine filters, a high differential pressure, which could damage the filter element, activates a valve that shuts off liquid flow to protect the filter element from possible damage. To prevent a high pressure situation, the filters are cleaned routinely with pulses of compressed air that force water back through the filter. Cleaning is terminated automatically by shutting off the compressed air supply if high pressure develops. The differential pressure across the auxiliary filters also is monitored. A high differential pressure in these filters would result in a system shutdown to allow the filters to be changed out.

The Load-In Station filtration system has pressure gauges for monitoring the differential pressure across each filter. A high differential pressure would result in discontinuing filter operation until the filter is replaced.

Ultraviolet Light/Oxidation System and Decomposers. A rupture disk on the inlet piping to each of the UV/OX reaction vessels relieves to the pH adjustment tank in the event of excessive pressure developing in the piping system. Should the rupture disk fail, the aqueous waste would trip the moisture sensor, shut down the UV lamps, and close the surge tank feed valve. Also provided is a level sensor to protect UV lamps against the risk of exposure to air. Should those sensors be actuated, the UV lamps would be shut down immediately.

The piping and valving for the hydrogen peroxide decomposers are configured to split the waste flow: half flows to one decomposer and half flows to the other decomposer. Alternatively, the total flow of waste can be treated in one decomposer or both decomposers can be bypassed. A safety relief valve on each decomposer vessel can relieve excess system pressure to a sump tank.

Degasification System. The degasification column is typically supplied aqueous waste feed by the pH adjustment tank feed pump. This pump transfers waste solution through the hydrogen peroxide decomposer, the fine filter, and the degasification column to the first RO feed tank.

The degasification column is designed for operation at a partial vacuum. A pressure sensor in the column detects the column pressure. The vacuum in the degasification column is maintained by a blower connected to the vessel offgas system. The column is protected from extremely low pressure developed by the column blower by the use of an intake vent that is maintained in the open position

during operation. The column liquid level is regulated by a flow control system with a high- and low-level alarm. A plate-type heat exchanger cools the waste solution fed to the degasification column.

Reverse Osmosis System. The flow through the first and second RO stages is controlled to maintain constant liquid levels in the first and second stage RO feed tanks.

Polisher. Typically, two of the three columns are in operation (lead/lag) and the third (regenerated) column is in standby. When the capacity of the resin in the first column is exceeded, as detected by an increase in the conductivity of the column effluent, the third column, containing freshly regenerated IX resin, is brought online. The first column is taken offline, and the waste is rerouted to the second column, and to the third. Liquid level instrumentation and automatically operated valves are provided in the IX system to prevent overfilling.

Effluent Treatment Facility Evaporator. Liquid level instrumentation in the secondary waste receiving tanks is designed to preclude a tank overflow. A liquid level switch actuated by a high-tank liquid level causes the valves to reposition, closing off flow to the secondary waste receiving tanks. Secondary containment for these tanks routes liquids to a sump tank.

Valves in the ETF evaporator feed line can be positioned to bypass the secondary waste around the ETF evaporator and to transfer the secondary waste to the concentrate tanks.

Thin Film Dryer. The two concentrate tanks alternately feed the thin film dryer. One tank serves as a concentrate waste receiver while the other tank serves as the dryer feed tank. Liquid level instrumentation prevents tank overflow by diverting the concentrate flow from the full concentrate tank to the other concentrate tank. Secondary containment for these tanks routes liquids to a sump tank.

An alternate route is provided from the concentrate receiver tank to the secondary waste receiving tanks. Dilute concentrate in the concentrate receiver tank can be reprocessed through the ETF evaporator by transferring the concentrate back to a secondary waste receiving tank.

4.4.6 Labels or Signs [D-2e]

Each tank or process unit in the ETF is identified by a nameplate attached in a readily visible location. Included on the nameplate are the equipment number and the equipment title. Those tanks which store or treat dangerous waste at the ETF (Section 4.4.1.1) are identified with a label which reads "PROCESS WATER/WASTE". The labels are legible at a distance of at least fifty feet or as appropriate for legibility within the ETF. Additionally, these tanks bear a legend that identifies the waste in a manner which adequately warns employees, emergency personnel, and the public of the major risk(s) associated with the waste being stored or treated in the tank system(s).

Caution plates are used to show possible hazards and warn that precautions are necessary. Caution signs have a yellow background and black panel with yellow letters and bear the word "CAUTION". Danger signs show immediate danger and signify that special precautions are necessary. These signs are red, black, and white and bear the word "DANGER".

Tanks and vessels containing corrosive chemicals are posted with black and white signs bearing the word "CORROSIVE". "DANGER - UNAUTHORIZED PERSONNEL KEEP OUT" signs are posted on all exterior doors of the ETF, and on each interior door leading into the process area. Tank ancillary piping is also labeled "PROCESS WATER" or "PROCESS LIQUID" to alert personnel which pipes in the process area contain dangerous and/or mixed waste.

4.4.7 Air Emissions [D-2f]

Tank systems that contain extremely hazardous waste that is acutely toxic by inhalation must be designed to prevent the escape of such vapors. To date, no extremely hazardous waste has been managed in ETF tanks and is not anticipated. However, the ETF tanks have forced ventilation that draws air from the tank vapor spaces to prevent exposure of operating personnel to any toxic vapors that might be present. The vapor passes through a charcoal filter and two sets of high-efficiency particulate air filters before discharge to the environment.

4.4.8 Management of Ignitible or Reactive Wastes in Tanks Systems [D-2g]

Although the ETF is permitted to accept waste that is designated ignitible or reactive, such waste would be treated or blended immediately after placement in the tank system so that the resulting waste mixture is no longer ignitible or reactive. Aqueous waste received does not meet the definition of a combustible or flammable liquid given in National Fire Protection Association (NFPA) code number 30 (NFPA 1996). The buffer zone requirements in NFPA-30, which require tanks containing combustible or flammable solutions be a safe distance from each other and from public way, are not applicable.

4.4.9 Management of Incompatible Wastes in Tanks Systems [D-2h]

The ETF manages dilute solutions that can be mixed without compatibility issues. The ETF is equipped with several systems that can adjust the pH of the waste for treatment activities. Sulfuric acid and sodium hydroxide are added to the process through the MCS for pH adjustment to ensure there will be no large pH fluctuations and adverse reactions in the tank systems.

4.5 SURFACE IMPOUNDMENTS [173-303-806-(4)(d)]

This section provides specific information on surface impoundment operations at the LERF, including descriptions of the liners and secondary containment structures, as required by WAC 173-303-650 and WAC 173-303-806(4)(d).

The LERF consists of three lined surface impoundments (basins) with a design operating capacity of 29.5 millions liters each. The maximum capacity of each basin is 34 million liters. The dimensions of each basin at the anchor wall are approximately 103 meters by 85 meters. The typical top dimensions of the wetted area are approximately 89 meters by 71 meters, while the bottom dimensions are approximately 57 by 38 meters. Total depth from the top of the dike to the bottom of the basin is approximately 7 meters. The typical finished basin bottoms lie at about 4 meters below the initial grade and 175 meters above sea level. The dikes separating the basins have a typical height of 3 meters and typical top width of 11.6 meters around the perimeter of the impoundments.

4.5.1 List of Dangerous Waste [806(4)(d)(i)]

A list of dangerous and/or mixed aqueous waste that can be stored in LERF is presented in Chapter 1.0. The waste analysis plan for the LERF and ETF (Appendix 3A) also provides a discussion of the types of waste that are managed in the LERF.

4.5.2 Construction, Operation, and Maintenance of Liner System [806(4)(d)(ii)(A)]

General information concerning the liner system is presented in the following sections. Information regarding loads on the liner, liner coverage, UV light exposure prevention, and location relative to the water table also are discussed.

4.5.2.1 Liner Construction Materials [650(2)(a)(i)(A)]

The LERF employs a double-composite liner system with a leachate detection, collection, and removal system between the primary and secondary liners. Each basin is constructed with an upper or primary liner consisting of a high-density polyethylene geomembrane laid over a bentonite carpet liner. The lower or secondary liner in each basin is a composite of a geomembrane laid over a layer of soil/bentonite admixture with a hydraulic conductivity less than 10^{-7} centimeters per second. The synthetic liners extend up the dike wall to a concrete anchor wall that completely surrounds the basin at the top of the dike. A batten system bolts the layers in place to the anchor wall (Figure 4-15).

Figure 4-16 is a schematic cross-section of the liner system. The liner components, listed from the top to the bottom of the liner system, are the following:

- Primary 1.5-millimeter high-density polyethylene geomembrane
- Bentonite carpet liner
- Geotextile
- Drainage gravel (bottom) and geonet (sides)
- Geotextile
- Secondary 1.5-millimeter high-density polyethylene geomembrane
- Soil/bentonite admixture (91 centimeters on the bottom, 107 centimeters on the sides)
- Geotextile.

The primary geomembrane, made of 1.5-millimeter high-density polyethylene, forms the basin surface that holds the aqueous waste. The secondary geomembrane, also 1.5-millimeter high-density polyethylene, forms a barrier surface for leachate that might penetrate the primary liner. The high-density polyethylene chemically is resistant to constituents in the aqueous waste and has a relatively high strength compared to other lining materials. The high-density polyethylene resin specified for the LERF contains carbon black, antioxidants, and heat stabilizers to enhance its resistance to the degrading effects of UV light. The approach to ensuring the compatibility of aqueous waste streams with the LERF liner materials and piping is discussed in the waste analysis plan (Appendix 3A).

Three geotextile layers are used in the LERF liner system. The layers are thin, nonwoven polypropylene fabric that chemically are resistant, highly permeable, and resistant to microbiological growth. The first two layers prevent fine soil particles from infiltrating and clogging the drainage layer. The second geotextile also provides limited protection for the secondary geomembrane from the drainage rock. The third geotextile layer prevents the mixing of the soil/bentonite admixture with the much more porous and granular foundation material.

A 30.5-centimeters-thick gravel drainage layer on the bottom of the basins between the primary and secondary liners provides a flow path for liquid to the leachate detection, collection, and removal system. A geonet (or drainage net) is located immediately above the secondary geomembrane on the basin sidewalls. The geonet functions as a preferential flow path for liquid between the liners, carrying liquid down to the gravel drainage layer and subsequently to the leachate sump. The geonet is a mesh made of high-density polyethylene, with approximately 13-millimeter openings.

The soil/bentonite layer is 97 centimeters thick on the bottom of the basins and 107 centimeters thick on the basin sidewalls; its permeability is less than 10^{-7} centimeters per second. This composite liner design, consisting of a geomembrane laid over essentially impermeable soil/bentonite, is considered best available technology for solid waste landfills and surface impoundments. The combination of synthetic

and clay liners is reported in the literature to provide the maximum protection from waste migration (Forseth and Kmet 1983).

A number of laboratory tests were conducted to measure the engineering properties of the soil/bentonite admixture, in addition to extensive field tests performed on three test fills constructed near the LERF site. For the purpose of establishing an optimum ratio of bentonite to soil for the soil/bentonite admixture, mixtures of various ratios were tested to determine permeability and shear strength. A mixture of 12 percent bentonite was selected for the soil/bentonite liner and tests described in the following paragraphs demonstrated that the admixture meets the desired permeability of less than 10^{-7} centimeters per second. Detailed discussion of test procedures and results is provided in *Report of Geotechnical Investigation, 242-A Evaporation and PUREX Interim Storage Basins* (Chen-Northern 1990).

Direct shear tests were performed according to ASTM D3080 test procedures (ASTM 1990) on soil/bentonite samples of various ratios. Based on these results, the conservative minimum Mohr-Coulomb shear strength value of 30 degrees was estimated for a soil/bentonite admixture containing 12 percent bentonite.

The high degree of compaction of the soil/bentonite layer [92 percent per ASTM D1557 (ASTM 1991)] was expected to maximize the bonding forces between the clay particles, thereby minimizing moisture transport through the liner. With respect to particle movement ('piping'), estimated fluid velocities in this low-permeability material are too low to move the soil particles. Therefore, piping is not considered a problem.

For the soil/bentonite layer, three test fills were constructed to demonstrate that materials, methods, and procedures used would produce a soil/bentonite liner that meets the EPA permeability requirement of less than 10^{-7} centimeters per second. All test fills met the EPA requirements. A thorough discussion of construction procedures, testing, and results is provided in *Report of Permeability Testing, Soil-bentonite Test Fill* (Chen-Northern 1991a).

The aqueous waste stored in the LERF is typically a dilute mixture of organic and inorganic constituents. Though isolated instances of soil liner incompatibility have been documented in the literature (Forseth and Kmet 1983), these instances have occurred with concentrated solutions that were incompatible with the geomembrane liners in which the solutions were contained. Considering the dilute nature of the aqueous waste that is and will be stored in LERF and the moderate pH, and test results demonstrating the compatibility of the high-density polyethylene liners with the aqueous waste [*9090 Test Results* (WHC 1991)], gross failure of the soil/bentonite layer is not probable.

Each basin also is equipped with a floating very low-density polyethylene cover. The cover is anchored and tensioned at the concrete wall at the top of the dikes, using a patented mechanical tensioning system. Figure 4-15 depicts the tension mechanism and the anchor wall at the perimeter of each basin. Additional information on the cover system is provided in Section 4.5.2.5.

4.5.2.1.1 Material Specifications.

Material specifications for the liner system and leachate collection system, including liners, drainage gravel, and drainage net are discussed in the following sections. Material specifications are documented in the *Final Specifications 242-A Evaporator and PUREX Interim Retention Basins* (KEH 1990a) and *Construction Specifications for 242-A Evaporator and PUREX Interim Retention Basins* (KEH 1990b).

Geomembrane Liners. The high-density polyethylene resin for geomembranes for the LERF meets the material specifications listed in Table 4-4. Key physical properties include thickness (1.5 millimeters [60 mil]) and impermeability (hydrostatic resistance of over 360,000 kilogram per square meter). Physical properties meet National Sanitation Foundation Standard 54 (NSF 1985). Testing to determine

if the liner material is compatible with typical dilute waste solutions was performed and documented in *9090 Test Results* (WHC 1991).

Soil/Bentonite Liner. The soil/bentonite admixture consists of 11.5 to 14.5 percent bentonite mixed into well-graded silty sand with a maximum particle size of 4.75 millimeters (No. 4 sieve). Test fills were performed to confirm the soil/bentonite admixture applied at LERF has hydraulic conductivity less than 10^{-7} centimeters per second, as required by WAC 173-303-650(2)(j) for new surface impoundments.

Bentonite Carpet Liner. The bentonite carpet liner consists of bentonite (90 percent sodium montmorillonite clay) in a primary backing of woven polypropylene with nylon filler fiber, and a cover fabric of open weave spunlace polyester. The montmorillonite is anticipated to retard migration of solution through the liner, exhibiting a favorable cation exchange for adsorption of some constituents (such as ammonium). Based on composition of the bentonite carpet and of the type of aqueous waste stored at LERF, no chemical attack, dissolution, or degradation of the bentonite carpet liner is anticipated.

Geotextile. The nonwoven geotextile layers consist of long-chain polypropylene polymers containing stabilizers and inhibitors to make the filaments resistant to deterioration from UV light and heat exposure. The geotextile layers consist of continuous geotextile sheets held together by needle-punching. Edges of the fabric are sealed or otherwise finished to prevent outer material from pulling away from the fabric or ravelling.

Drainage Gravel. The drainage layer consists of thoroughly washed and screened, naturally occurring rock meeting the size specifications for Grading Number 5 in Washington State Department of Transportation construction specifications (WSDOT 1988). The specifications for the drainage layer are given in Table 4-5. Hydraulic conductivity tests (Chen-Northern 1992a, 1992b, 1992c) showed the drainage rock used at LERF met the sieve requirements and had a hydraulic conductivity of at least 1 centimeter per second, which exceeded the minimum of at least 0.1 centimeters per second required by WAC 173-303-650(2)(j) for new surface impoundments.

Geonet. The geonet is fabricated from two sets of parallel high-density polyethylene strands, spaced 1.3 centimeters center-to-center maximum to form a mesh with minimum two strands per 2.54 centimeter in each direction. The geonet is located between the liners on the sloping sidewalls to provide a preferential flow path for leachate to the drainage gravel and subsequently to the leachate sump.

Leachate Collection Sump. Materials used to line the 3.0-meter by 1.8-meter by 0.30-meter-deep leachate sump, at the bottom of each basin in the northwest corner, include [from top to bottom (Figure 4-17)]:

- 25 millimeter high-density polyethylene flat stock (supporting the leachate riser pipe)
- Geotextile
- 1.5-millimeter high-density polyethylene rub sheet
- Secondary composite liner:
  - 1.5-millimeter high-density polyethylene geomembrane
  - 91 centimeters of soil/bentonite admixture
  - Geotextile.

Specifications for these materials are identical to those discussed previously.

Leachate System Risers. Risers for the leachate system consist of 10-inch and 4-inch pipes from the leachate collection sump to the catch basin northwest of each basin (Figure 4-17). The risers lay below

the primary liner in a gravel-filled trench which also extends from the sump to the concrete catch basin (Figure 4-18).

The risers are high-density polyethylene pipes fabricated to meet the requirements in ASTM D1248 (ASTM 1989). The 10-inch riser is perforated every 20.3 centimeters with 1.3-centimeter holes around the diameter. Level sensors and leachate pump are inserted in the 10-inch riser to monitor and remove leachate from the sump. To prevent clogging of the pump and piping with fine particulate, the end of the riser is encased in a gravel-filled box constructed of high-density polyethylene geonet and wrapped in geotextile. The 4-inch riser is perforated every 10.2 centimeters with 0.64-centimeter holes around the diameter. A level detector is inserted in the 4-inch riser.

Leachate Pump. A deep-well submersible pump, designed to deliver approximately 110 liters per minute, is installed in the 10-inch leachate riser in each basin. Wetted parts of the leachate pump are made of 316L stainless steel, providing both corrosion resistance and durability.

4.5.2.1.2 Loads on Liner System.

The LERF liner system is subjected to the following types of stresses.

Stresses from Installation or Construction Operations. Contractors were required to submit construction quality control plans that included procedures, techniques, tools, and equipment used for the construction and care of liner and leachate system. Methods for installation of all components were screened to ensure that the stresses on the liner system were kept to a minimum.

Calculations were performed to estimate the risk of damage to the secondary high-density polyethylene liner during construction (*Calculations for LERF Part B Permit Application* [HNF 1997]). The greatest risk expected was from spreading the gravel layer over the geotextile layer and secondary geomembrane. The results of the calculations show that the strength of the geotextile was sufficiently high to withstand the stress of a small gravel spreader driving on a minimum of 15 centimeters of gravel over the geotextile and geomembrane. The likelihood of damage to the geomembrane lying under the geotextile was considered to be low.

To avoid driving heavy machinery directly on the secondary liner, a 28-meter conveyer was used to deliver the drainage gravel into the basins. The gravel was spread and consolidated by hand tools and a bulldozer. The bulldozer traveled on a minimum thickness of 30.5 centimeters of gravel. Where the conveyer assembly was placed on top of the liner, cribbing was placed to distribute the conveyer weight. No heavy equipment was allowed for use directly in contact with the geomembranes.

Additional calculations were performed to estimate the ability of the leachate riser pipe to withstand the static and dynamic loading imposed by lightweight construction equipment riding on the gravel layer (HNF 1997). Those calculations demonstrated that the pipe could buckle under the dynamic loading of small construction equipment; therefore, the pipe was avoided by equipment during spreading of the drainage gravel.

Installation of synthetic lining materials proceeded only when winds were less than 24 kilometers per hour, and not during precipitation. The minimum ambient air temperature for unfolding or unrolling the high-density polyethylene sheets was -10 C, and a minimum temperature of 0 C was required for seaming the high-density polyethylene sheets. Between shifts, geomembranes and geotextile were anchored with sandbags to prevent lifting by wind. Calculations were performed to determine the appropriate spacing of sandbags on the geomembrane to resist lifting caused by 130 kilometer per hour winds (HNF 1997). All of the synthetic components contain UV light inhibitors and no impairment of performance is anticipated from the short-term UV light exposure during construction. Section 4.5.2.5 provides further detail on exposure prevention.

During laying of the soil/bentonite layer and the overlying geomembrane, moisture content of the admixture was monitored and adjusted to ensure optimum compaction and to avoid development of cracks.

4.5.2.1.3 Static and Dynamic Loads and Stresses from the Maximum Quantity of Waste

When a LERF basin is full, liquid depth is approximately 6.4 meters. Static load on the primary liner is roughly 6,400 kilograms per square meter. Load on the secondary liner is slightly higher because of the weight of the gravel drainage layer. Assuming a density of 805 kilograms per square meter for the drainage gravel [conservative estimate based on specific gravity of 2.65 (Ambrose 1988)], the secondary high-density polyethylene carries approximately 7,200 kilograms per square meter when a basin is full.

Sideslope liner stresses were calculated for each of the layers in the basin sidewalls and for the pipe trench on the northwest corner of each basin (HNF 1997). Results of these calculations indicate factors of safety against shear were 1.5 or greater for the primary geomembrane, geotextile, geonet, and secondary geomembrane.

Because the LERF is not located in an area of seismic concern, as identified in Appendix VI of 40 CFR 264 and WAC 173-303-282(6)(a)(I), discussion and calculation of potential seismic events are not required.

4.5.2.1.4 Stresses Resulting from Settlement, Subsidence, or Uplift

Uplift stresses from natural sources are expected to have negligible impact on the liner. Groundwater lies approximately 62 meters below the LERF, average annual precipitation is only 16 centimeters, and the average unsaturated permeability of the soils near the basin bottoms is high, ranging from about 5.5×10^{-4} centimeters per second to about 1 centimeter per second (Chen-Northern 1991b). Therefore, no hydrostatic uplift forces are expected to develop in the soil underneath the basins. In addition, the soil under the basins consists primarily of gravel and sand, and contains few or no organic constituents. Therefore, uplift caused by gas production from organic degradation is not anticipated.

Based on the design of the soil-bentonite liner, no structural uplift stresses are present within the lining system (Chen-Northern 1991b).

Regional subsidence is not anticipated because neither petroleum nor extractable economic minerals are present in the strata underlying the LERF basins, nor is karst (erosive limestone) topography present.

Dike soils and soil/bentonite layers were compacted thoroughly and proof-rolled during construction. Calculation of settlement potential showed that combined settlement for the foundation and soil/bentonite layer is expected to be about 2.7 centimeters. Settlement impact on the liner and basin stability is expected to be minimal (Chen-Northern 1991b).

4.5.2.1.5 Internal and External Pressure Gradients

Pressure gradients across the liner system from groundwater are anticipated to be negligible. The LERF is about 62 meters above the seasonal high water table, which prevents buildup of water pressure below the liner. The native gravel foundation materials of the LERF are relatively permeable and free draining. The 2 percent slope of the secondary liner prevents the pooling of liquids on top of the secondary liner. Finally, the fill rate of the basins is slow enough (average 190 liters per minute) that the load of the liquid waste on the primary liner is gradually and evenly distributed.

To prevent the buildup of gas between the liners, each basin is equipped with 21 vents in the primary geomembrane that allow the reduction of any excess gas pressure. Gas passing through these vents exit through a single pipe that penetrates the anchor wall into a carbon adsorption filter. This filter extracts nearly all of the organic compounds, ensuring that emissions to the air from the basins are not toxic.

4.5.2.2 Liner System Location Relative to High-Water Table

The lowest point of each LERF basin is the northwest corner of the sump, where the typical subgrade elevation is 1[illegible] meters above mean sea level. Based on data collected from the groundwater monitoring wells at the LERF site, the seasonal high-water table is located approximately 62 meters or more below the lowest point of the basins. This substantial thickness of unsaturated strata beneath the LERF provides ample protection to the liner from hydrostatic pressure because of groundwater intrusion into the soil/bentonite layer. Further discussion of the unsaturated zone and site hydrogeology is provided in Chapter 5.0.

4.5.2.3 Liner System Foundation [650(2)(a)(I)(B)]

Foundation materials are primarily gravels and cobbles with some sand and silt. The native soils onsite are derived from unconsolidated Holocene sediments. These sediments are fluvial and glaciofluvial sands and gravels deposited during the most recent glacial and postglacial event. Grain-size distributions and shape analyses of the sediments indicate that deposition occurred in a high energy environment (Chen-Northern 1990).

Analysis of five soil borings from the LERF site was conducted to characterize the natural foundation materials and to determine the suitability of onsite soils for construction of the impoundment dikes and determine optimal design factors. Well-graded gravel containing varying amounts of silt, sand, and cobbles comprises the layer in which the basins were excavated. This gravel layer extends to depths of 10 to 11 meters below land surface (Chen-Northern 1990). The basins are constructed directly on the subgrade. Excavated soils were screened to remove oversize cobbles (greater than 15 centimeters in the largest dimension) and used to construct the dikes.

Settlement potential of the foundation material and soil/bentonite layer was found to be low. The foundation is comprised of undisturbed native soils. The bottom of the basin excavation lies within the well-graded gravel layer, and is dense to very dense. Below the gravel is a layer of dense to very dense poorly-graded and well-graded sand. Settlement was calculated for the gravel foundation soils and for the soil/bentonite layer, under the condition of hydrostatic loading from 6.4 meters of fluid depth. The combined settlement for the soils and the soil/bentonite layer is estimated to be about 2.7 centimeters. This amount of settlement is expected to have minimal impact on overall liner or basin stability (Chen-Northern 1991b). Settlement calculations are provided in *Calculations for Liquid Effluent Retention Facility Part B Permit Application* (HNF 1997).

The load bearing capacity of the foundation material, based on the soil analysis discussed previously, is estimated at about 48,800 kilograms per square meter [maximum advisable presumptive bearing capacity (Hough 1969)]. Anticipated static and dynamic loading from a full basin is estimated to be less than 9,000 kilograms per square meter (Section 4.5.2.1.3), which provides an ample factor of safety.

When the basins are empty, excess hydrostatic pressure in the foundation materials under the liner system theoretically could result in uplift and damage. However, because the native soil forming the foundations is unsaturated and relatively permeable, and because the water table is located at a considerable depth beneath the basins, any infiltration of surface water at the edge of the basin is expected to travel predominantly downward and away from the basins, rather than collecting under the excavation itself. No gas is expected in the foundation because gas-generating organic materials are not present.

Subsidence of undisturbed foundation materials is generally the result of fluid extraction (water or petroleum), mining, or karst topography. Neither petroleum, mineral resources, nor karst are believed to be present in the sediments overlying the Columbia River basalts. Potential groundwater resources do exist below the LERF. Even if these sediments were to consolidate from fluid withdrawal, their depth most likely would produce a broad, gently sloping area of subsidence that would not cause significant

strains in the LERF liner system. Consequently, the potential for subsidence related failures is expected to be negligible.

Borings at the LERF site, and extensive additional borings in the 200 East Area, have not identified any significant quantities of soluble materials in the foundation soil or underlying sediments (Last et al. 1989). Consequently, the potential for sinkholes is considered negligible.

4.5.2.4 Liner System Exposure Prevention

Both primary and secondary geomembranes and the floating cover are stabilized with carbon black to prevent degradation from UV light. Furthermore, none of the liner layers experience long-term exposure to the elements. During construction, thin polyethylene sheeting was used to maintain optimum moisture content and provide protection from the wind for the soil/bentonite layer until the secondary geomembrane was laid in place. The secondary geomembrane was covered by the geonet and geotextile as soon as quality control testing was complete. Once the geotextile layer was completed, drainage material immediately was placed over the geotextile. The final (upper) geotextile layer was placed over the drainage gravel and immediately covered by the bentonite carpet liner. This was covered immediately, in turn, by the primary high-density polyethylene liner.

Both high-density polyethylene liners, geotextile layers, and geonet are anchored permanently to a concrete wall at the top of the basin berm. During construction, liners were held in place with many sandbags on both the basin bottoms and sideslopes to prevent wind from lifting and damaging the materials. Calculations were performed to determine the amount of fluid needed in a basin to prevent wind lift damage to the primary geomembrane. Approximately 15 to 20 centimeters of solution are kept in each basin to minimize the potential for uplifting the primary liner (HNF 1997).

The entire lining system is covered by a very low-density polyethylene floating cover that is bolted to the concrete anchor wall. The floating cover prevents evaporation and intrusion from dust, precipitation, vegetation, animals, and birds. A patented tensioning system is employed to prevent wind from lifting the cover and to automatically accommodate changes in liquid level in the basins. The cover tension mechanism consists of a cable running from the flexible geosynthetic cover over a pulley on the tension tower (located on the concrete anchor wall) to a deadman anchor. These anchors (blocks) simply hang from the cables on the exterior side of the tension towers. The anchor wall also provides for solid attachment of the liner layers and the cover, using a 6.4-millimeter batten and neoprene gasket to bolt the layers to the concrete wall, effectively sealing the basin from the intrusion of light, precipitation, and airborne dust (Figure 4-15).

The floating cover, made of very low-density polyethylene with UV light inhibitors, is anticipated to experience no unacceptable degradation during the service life of the LERF. The very low-density polyethylene material contains carbon black for UV light protection, anti-oxidants to prevent heat degradation, and seaming enhancers to improve its ability to be welded. A typical manufacturer's limited warranty for weathering of very low-density polyethylene products is 20 years (Poly America, undated). This provides a margin of safety for the anticipated medium-term use of the LERF for aqueous waste storage.

The upper 3.4 to 4.6 meters of the sidewall liner also could experience stresses in response to temperature changes. Accommodation of thermal influences for the LERF geosynthetic layers is affected by inclusion of sufficient slack as the liners were installed. Calculations demonstrate that approximately 67 centimeters of slack is required in the long basin bottom dimension, 46 centimeters across the basin, and 34 centimeters from the bottom of the basin to the top of the basin wall (HNF 1997).

Thermal stresses also are experienced by the floating cover. As with the geomembranes, sufficient slack was included in the design to accommodate thermal contraction and expansion.

4.5.2.4.1 Liner Repairs During Operations

Should repair of a basin liner be required while the basin is in operation, the basin contents will be transferred to the ETF or another available basin. After the liner around the leaking section is cleaned, repairs to the geomembrane will be made by the application of a piece of high-density polyethylene sheeting, sufficient in size to extend approximately 8 to 15 centimeters beyond the damaged area, or as recommended by the vendor. A round or oval patch will be installed using the same type of equipment and criteria used for the initial field installations.

4.5.2.4.2 Control of Air Emissions

The floating covers limit evaporation of aqueous waste and releases of volatile organic compounds into the atmosphere. To accommodate volumetric changes in the air between the fluid in the basin and the cover, and to avoid problems related to 'sealing' the basins too tightly, each basin is equipped with a carbon filter breather vent system. Any air escaping from the basins must pass through this vent, consisting of a pipe that penetrates the anchor wall and extends into a carbon adsorption filter unit.

4.5.2.5 Liner Coverage [650(2)(a)(I)(C)]

The liner system covers all of the ground surface that underlies the retention basins. The primary liner extends up the sideslopes to a concrete anchor wall at the top of the dike encircling the entire basin (Figure 4-15).

4.5.3 Prevention of Overtopping [806(4)(d)(ii)(B)]

Overtopping prevention is accomplished through administrative controls and liquid-level instrumentation installed in each basin. The instrumentation includes local liquid-level indication as well as remote indication at the ETF. Before an aqueous waste is transferred into a basin, administrative controls are implemented to ensure overtopping will not occur during the transfer. The volume of feed to be transferred is compared to the available volume in the receiving basin. The transfer is not initiated unless there is sufficient volume available in the receiving basin or a cut-off level is established. The transfer into the basin would be stopped when this cut-off level is reached.

In the event of a 100-year, 24-hour storm event, precipitation would accumulate on the basin covers. Through the self-tensioning design of the basin covers and maintenance of adequate freeboard, all accumulated precipitation would be contained on the covers and none would flow over the dikes or anchor walls. The 100-year, 24-hour storm is expected to deliver 5.3 centimeters of rain or approximately 61 centimeters of snow. Cover specifications include the requirement that the covers be able to withstand the load from this amount of precipitation. Because the cover floats on the surface of the fluid in the basin, the fluid itself provides the primary support for the weight of the accumulated precipitation. Through the cover self-tensioning mechanism, there is ample 'give' to accommodate the overlying load without overstressing the anchor and attachment points.

Rain water and snow evaporate readily from the cover, particularly in the arid Hanford Facility climate, where evaporation rates exceed precipitation rates for most months of the year. The black color of the cover further enhances evaporation. Thus, the floating cover prevents the intrusion of precipitation into the basin and provides for evaporation of accumulated rain or snow.

4.5.3.1 Freeboard

Under current operating conditions, 0.61 meter of freeboard is maintained at each LERF basin, which corresponds to an operating level of 6.8 meters, or 29.5 million liters.

4.5.3.2 Immediate Flow Shutoff

The mechanism for transferring aqueous waste is either through pump transfers with on/off switches or through gravity transfers with isolation valves. These methods provide positive ability to shut off transfers immediately in the event of overtopping. Overtopping a basin during a transfer is very unlikely because the low flow rates into the basin provides long response times. At a flow rate of 284 liters per minute, approximately 11 days would be required to fill a LERF basin from the 6.8 meter operating level (i.e., 0.61 meter of freeboard) to maximum capacity of 34 million liters (i.e., the 7.4-meter level).

4.5.3.3 Outflow Destination

Aqueous waste in the LERF is transferred routinely to ETF for treatment. However, should it be necessary to immediately empty a basin, the aqueous waste either would be transferred to the ETF for treatment or transferred to another basin (or basins), whichever is faster. If the waste is transferred to another LERF basin, the single pump for normal operation can be removed, and four submersible pumps can be installed using an emergency pump manifold. This portable piping and pumping system is capable of pumping 2,700 liters per minute. Not including set-up time, it would take approximately 7.6 days to pump the contents of a full basin at this pumping rate.

4.5.4 Structural Integrity of Dikes [806(4)(d)(ii)(C)]

Written certification attesting to the structural integrity of the dikes, signed by a qualified, registered professional engineer, is included in Appendix 4D.

4.5.4.1 Dike Design, Construction, and Maintenance [650(2)(f), (g), and (h)]

The dikes of the LERF are constructed of onsite native soils, generally consisting of cobbles and gravels. Well-graded mixtures were specified, with cobbles up to 15 centimeters in the largest dimension, but not constituting more than 20 percent of the volume of the fill. The dikes are designed with a 3:1 (3 units horizontal to 1 unit vertical) slope on the basin side, and 2.25:1 on the exterior side. The dikes are approximately 8.2 meters high from the bottom of the basin, and 3 meters abovegrade.

Calculations were performed to verify the structural integrity of the dikes (HNF 1997). The calculations demonstrate that the structural strength of the dikes is such that, without dependence on any lining system, the sides of the basins can withstand the pressure exerted by the maximum allowable quantity of fluid in the impoundment. The dikes have a factor of safety greater than 2.5 against failure by sliding.

4.5.4.2 Dike Stability and Protection

In the following paragraphs, various aspects of stability for the LERF dikes and the concrete anchor wall are presented, including slope failure, hydrostatic pressure, and protection from the environment.

Failure in Dike/Impoundment Cut Slopes. A slope stability analysis was performed to determine the factor of safety against slope failure. The computer program 'PCSTABL5' from Purdue University, using the modified Janbu Method, was employed to evaluate slope stability under both static and seismic loading cases. One hundred surfaces per run were generated and analyzed. The assumptions used were as follows (Chen-Northern 1991b):

- Weight of gravel: 2,160 kilograms per cubic meter
- Maximum dry density of gravel: 2,315 kilograms per cubic meter
- Mohr-Coulomb shear strength angle for gravel: minimum 33 degrees
- Weight of soil/bentonite: 1,600 kilograms per cubic meter

- Mohr-Coulomb shear strength angle for soil/bentonite: minimum 30 degrees
- Slope: 3 horizontal:1 vertical
- No fluid in impoundment (worst case for stability)
- Soils at in-place moisture (not saturated conditions).

Results of the static stability analysis showed that the dike slopes were stable with a minimum factor of safety of 1.77 (Chen-Northern 1991b).

The standard horizontal acceleration required in the *Hanford Plant Standards*, "Standard Architectural-Civil Design Criteria, Design Loads for Facilities" (DOE-RL 1988), for structures on the Hanford Site is 0.12 g. Adequate factors of safety for cut slopes in units of this type generally are considered to be 1.5 for static conditions and 1.1 for dynamic stability (Golder 1989). Results of the stability analysis showed that the LERF basin slopes were stable under horizontal accelerations of 0.10 and 0.15 g, with minimum factors of safety of 1.32 and 1.17, respectively (Chen-Northern 1991b). Printouts from the PCSTABL5 program are provided in *Calculations for Liquid Effluent Retention Facility Part B Permit Application* (HNF 1997).

Hydrostatic Pressure. Failure of the dikes due to buildup of hydrostatic pressure, caused by failure of the leachate system or liners, is very unlikely. The liner system is constructed with two essentially impermeable layers consisting of a synthetic layer overlying a soil layer with very low-hydraulic conductivity. It would require a catastrophic failure of both liners to cause hydrostatic pressures that could endanger dike integrity. Routine inspections of the leachate detection system, indicating quantities of leachate removed from the basins, provide an early warning of leakage or operational problems that could lead to excessive hydrostatic pressure. A significant precipitation event (e.g., a 100-year, 24-hour storm) will not create a hydrostatic problem because the interior sidewalls of the basins are covered completely by the liners. The covers can accommodate this volume of precipitation without overtopping the dike (Section 4.5.3), and the coarse nature of the dike and foundation materials on the exterior walls provides for rapid drainage of precipitation away from the basins.

Protection from Root Systems. Risk to structural integrity of the dikes as a result of penetrating root systems is minimal. Excavation and construction removed all vegetation on and around the impoundments, and native plants (such as sagebrush) grow very slowly. The large grain size of the cobbles and gravel used as dike construction material do not provide an advantageous germination medium for native plants. Should plants with extending roots become apparent on the dike walls, the plants will be controlled with appropriate herbicide application.

Protection from Burrowing Mammals. The cobble size materials that make up the dike construction material and the exposed nature of the dike sidewalls do not offer an advantageous habitat for burrowing mammals. Lack of vegetation on the LERF site discourages foraging. The risk to structural integrity of the dikes from burrowing mammals is therefore minimal. Periodic visual inspections of the dikes provide observations of any animals present. Should burrowing mammals be noted onsite, appropriate pest control methods such as trapping or application of rodenticides will be employed.

Protective Cover. Approximately 7.6 centimeters of crushed gravel serve as the cover of the exterior dike walls. This coarse material is inherently resistant to the effect of wind because of its large grain size. Total annual precipitation is low (16 centimeters) and a significant storm event (e.g., a 100-year, 24-hour storm) could result in about 5.3 centimeters of precipitation in a 24-hour period. The absorbent capacity of the soil exceeds this precipitation rate; therefore, the impact of wind and precipitation run-on to the exterior dike walls will be minimal.

4.5.5 Piping Systems

Aqueous waste from the 242-A Evaporator is transferred to the LERF using a pump located in the 242-A Evaporator and approximately 1,500 meters of pipe, consisting of a 3-inch carrier pipe within a 6-inch outer containment pipeline. Flow through the pump is controlled through a valve at flow rates from 150 to 300 liters per minute.

The pipeline exits the 242-A Evaporator belowgrade and remains belowgrade at a minimum 1.2-meter depth for freeze protection, until the pipeline emerges at the LERF catch basin, at the corner of each basin. All piping at the catch basin that is less than 1.2 meters belowgrade is wrapped with electric heat tracing tape and insulated for protection from freezing.

The transfer line from the 242-A Evaporator is centrifugally cast, fiberglass-reinforced epoxy thermoset resin pressure pipe fabricated to meet the requirements of ASME D2997 (ASME 1984). The 3-inch carrier piping is centered and supported within 6-inch containment piping. Pipe supports are fabricated of the same material as the pipe, and meet the strength requirements of ANSI B31.3 (ANSI 1987) for dead weight, thermal, and seismic loads.

A catch basin is provided at the northwest corner of each basin where piping extend from the basin to allow for basin-to-basin and basin-to-ETF liquid transfers. Drawings H-2-88766, sheets 1 through 4, in Appendix 4A, provide schematic diagrams of the piping system at LERF. Drawing H-2-79604, Appendix 4A, provides details of the piping from the 242-A Evaporator to LERF.

4.5.5.1 Secondary Containment System for Piping

The 6-inch containment piping encases the 3-inch carrier pipe from the 242-A Evaporator to the LERF. All of the piping and fittings that are not directly over a catch basin or a basin liner are of this pipe-within-a-pipe construction. A catch basin is provided at the northwest corner of each basin where the inlet pipes, leachate risers, and transfer pipe risers emerge from the basin. The catch basin consists of a 20-centimeter-thick concrete pad at the top of the dike. The perimeter of the catch basin has a 20-centimeter-high curb, and the concrete is coated with a chemical resistant epoxy sealant. The concrete pad is sloped so that any leaks or spills from the piping or pipe connections will drain into the basin. The catch basin provides an access point for inspecting, servicing, and operating various systems such as transfer valving, leachate level instrumentation and leachate pump. Drawing H-2-79593 (Appendix 4A) provides a schematic diagram of the catch basins.

4.5.5.2 Leak Detection System

Single-point electronic leak detection elements are installed along the transfer line at 305-meter intervals. The leak detection elements are located in the bottom of specially designed test risers. Each sensor element employs a conductivity sensor, which is connected to a cable leading back to the 242-A Evaporator control room. If a leak develops in the carrier pipe, fluid will travel down the exterior surface of the carrier pipe or the interior of the containment pipe. As moisture contacts a sensor unit, the alarm sounds in the 242-A Evaporator control room and the zone of the leak is indicated on the digital display. The pump located in the 242-A Evaporator is shut down, stopping the flow of aqueous waste through the transfer line.

The catch basins have conductivity leak detectors that alarm in the 242-A Evaporator control room. Leaks into the catch basins drain back to the basin through a 5.1-centimeter drain on the floor of the catch basin.

4.5.5.3 Certification

Although an integrity assessment is not required for piping associated with surface impoundments, an assessment of the transfer liner was performed, including a hydrostatic leak/pressure test at

10.5 kilograms per square centimeter gauge. A statement by an independent, qualified, registered professional engineer attesting to the integrity of the piping system is included in *Integrity Assessment Report for the 242-A Evaporator/LERF Waste Transfer Piping, Project W105* (WHC 1993), along with the results of the leak/pressure test.

4.5.6 Double Liner and Leak Detection, Collection, and Removal System [806(4)(d)(ii)(D) and 650(2)(j)(iii)]

The double-liner system for LERF is discussed in Section 4.5.2. The leachate detection, collection, and removal system (Figures 4-17 and 4-18) was designed and constructed to remove leachate that might permeate the primary liner. System components for each basin include:

- 30.5-centimeter layer of drainage gravel below the primary liner at the bottom of the basin
- Geonet below the primary liner on the sidewalls to direct leachate to the gravel layer
- 3.0-meter by 1.8-meter by 0.30-meter-deep leachate collection sump consisting of a 25 millimeter high-density polyethylene flat stock, geotextile to trap large particles in the leachate, and 1.5-millimeter high-density polyethylene rub sheet set on the secondary liner
- 10-inch and 4-inch perforated leachate high-density polyethylene riser pipes from the leachate collection sump to the catch basin northwest of the basin
- Leachate collection sump level instrumentation installed in the 4-inch riser
- Level sensors, submersible leachate pump, and 1.5-inch fiberglass-reinforced epoxy thermoset resin pressure piping installed in the 10-inch riser
- Piping at the catch basin to route the leachate through 1.5-inch high-density polyethylene pipe back to the basins.

The bottom of the basins have a 2 percent slope to allow gravity flow of leachate to the leachate collection sump. This exceeds the minimum of 1 percent slope required by WAC 173-303-650(j) for new surface impoundments. Material specifications for the leachate collection system are given in Section 4.5.2.1.1.

Calculations demonstrate that fluid from a small hole (2 millimeter) (EPA 1989, p. 122) at the furthest end of the basin, under a low head situation, would travel to the sump in less than 24 hours (HNF 1997). Additional calculations in indicate the capacity of the pump to remove leachate is sufficient to allow time to readily identify a leak and activate emergency procedures (HNF 1997).

Automated controls maintain the fluid level in each leachate sump below 33 centimeters to prevent significant liquid backup into the drainage layer. The leachate pump is activated when the liquid level in the sump reaches about 28 centimeters, and is shut off when the sump liquid level reaches about 18 centimeters. This operation prevents the leachate pump from cycling with no fluid, which could damage the pump. Liquid level control is accomplished with conductivity probes that trigger relays selected specifically for application to submersible pumps and leachate fluids. A flowmeter/totalizer on the leachate return pipe measures fluid volumes pumped and pumping rate from the leachate collection sumps, and indicates volume and flow rate on local readouts. Other instrumentation provided is real-time continuous level monitoring with a readout at the catch basin and the 242-A Evaporator control room. A sampling port is provided in the leachate piping system at the catch basin. Leak detection is provided through inspections of the leachate flow totalizer readings. For more information on inspections, refer to Chapter 6.0.

The stainless steel leachate pump is designed to deliver 110 liters per minute. The leachate pump returns draws liquid from the sump via 1.5-inch pipe and discharges into the basin through 1.5-inch high-density polyethylene pipe.

4.5.7 Construction Quality Assurance [806(4)(d)(ii)(F)]

The construction quality assurance plan and complete report of construction quality assurance inspection and testing results are provided in *242-A Evaporator Interim Retention Basin Construction Quality Assurance Plan* (KEH 1991). A general description of construction quality assurance procedures is outlined in the following paragraphs.

For excavation of the basins and construction of the dikes, regular inspections were conducted to ensure compliance with procedures and drawings, and compaction tests were performed on the dike soils.

For the soil/bentonite layer, test fills were first conducted in accordance with EPA guidance to demonstrate compaction procedures and to confirm compaction and permeability requirements can be met. The ratio of bentonite to soil and moisture content was monitored; lifts did not exceed 15 centimeters before compaction, and specific compaction procedures were followed. Laboratory and field tests of soil properties were performed for each lift and for the completed test fill. The same suite of tests was conducted for each lift during the laying of the soil/bentonite admixture in the basins.

Geotextiles and geomembranes were laid in accordance with detailed procedures and quality assurance programs provided by the manufacturers and installers. These included destructive and nondestructive tests on the geomembrane seams, and documentation of field test results and repairs.

4.5.8 Proposed Action Leakage Rate and Response Action Plan [806(4)(d)(ii)(G)]

An action leakage rate limit is established where action must be taken due to excessive leakage from the primary liner. The action leak rate is based on the maximum design flow rate the leak detection system can remove without the fluid head on the bottom liner exceeding 30 centimeters. The limiting factor in the leachate removal rate is the hydraulic conductivity of the drainage gravel. An action leakage rate (also called the rapid or large leak rate) of 20,000 liters per hectare per day was calculated for each basin (WHC 1992b).

When it is determined that the action leakage rate has been exceeded, the response action plan will follow the actions in WAC 173-303-650(11)(b) and (c), which includes notification of Ecology in writing within 7 days, assessing possible causes of the leak, and determining whether waste receipt should be curtailed and/or the basin emptied.

4.5.9 Dike Structural Integrity Engineering Certification [806(4)(d)(v)]

Written certification attesting to the structural integrity of the dikes, signed by a qualified, registered professional engineer, is included in Appendix 4D.

4.5.10 Management of Ignitible, Reactive, or Incompatible Wastes [806(4)(d)(viii and ix)]

Although ignitible or reactive aqueous waste might be received in small quantities at LERF, such aqueous waste is with dilute solutions in the basins, removing the ignitable or reactive characteristics. For compatibility requirements with the LERF liner, refer to the waste analysis plan (Appendix 3A).

4.6 AIR EMISSIONS CONTROL [D-8 and D-8a]

This section addresses the ETF requirements of Air Emission Standards for Process Vents, under 40 CFR 264, Subpart AA (incorporated by reference in WAC 173-303-690) and Subpart CC. The requirements of 40 CFR 264, Subpart BB (WAC 173-303-691) are not applicable because aqueous waste with 10 percent or greater organic concentration would not be acceptable for processing at the ETF.

4.6.1 Applicability of Subpart AA Standards [D-8a(1)]

The ETF evaporator and thin film dryer perform operations that specifically require evaluation for applicability of WAC 173-303-690. Aqueous waste in these units routinely contains greater than 10 parts per million concentrations of organic compounds and are, therefore, subject to air emission requirements under WAC 173-303-690. Organic emissions from all affected process vents on the Hanford Facility must be less than 1.4 kilograms per hour and 2.8 megagrams per year, or control devices must be installed to reduce organic emissions by 95 percent.

The vessel offgas system provides a process vent system. This system provides a slight vacuum on the ETF process vessels and tanks (refer to Section 4.2.5.2). Two vessel vent header pipes combine and enter the vessel offgas system filter unit consisting of a demister, electric heater, prefilter, high-efficiency particulate air filters, activated carbon adsorber, and two exhaust fans (one fan in service while the other is backup). The vessel offgas system filter unit is located in the high-efficiency particulate air filter room west of the process area. The vessel offgas system exhaust discharges into the larger building ventilation system, with the exhaust fans and stack located outside and immediately west of the ETF. The exhaust stack discharge point is 15.5 meters above ground level.

The annual average flow rate for the ETF stack (which is the combined vessel offgas and building exhaust flow rates) is provided in *Radionuclide Air Emissions Report for the Hanford Site - Calendar Year 1995* (DOE-RL 1996) as 220 cubic meters per minute with a total annual flow of approximately 1.2 E+08 cubic meters. During waste processing, the airflow through just the vessel offgas system is about 23 standard cubic meters per minute.

Organic emissions occur during waste processing, which occurs less than 310 days each year (i.e., 85 percent operating efficiency). This operating efficiency represents the maximum annual operating time for the ETF, as shutdowns are required during the year for planned maintenance outages and for reconfiguring the ETF to accommodate different aqueous waste.

4.6.2 Process Vents - Demonstrating Compliance [D-8a(2)]

This section outlines how the ETF complies with the requirements and includes a discussion of the basis for meeting the organic emissions limits, calculations demonstrating compliance, and conditions for re-evaluation.

4.6.2.1 Basis for Meeting Limits/Reductions [D-8a(2)(a)]

The 242-A Evaporator and the 200 Area ETF are currently the only operating TSD units that contribute to the Hanford Facility volatile organic emissions under 40 CFR 264, Subpart AA. The combined release rate is currently well below the threshold of 1.4 kilograms per hour or 2,800 kilograms per year of volatile organic compounds [General Information Portion (DOE/RL-91-28)]. As a result, the ETF meets these standards without the use of air pollution control devices.

The amount of organic emissions could change as waste streams are changed, or TSD units are brought online or are deactivated. The organic air emissions summation will be re-evaluated periodically as condition warrants. Operations of the TSD units operating under 40 CFR 264, Subpart AA, will be

controlled to maintain Hanford Facility emissions below the threshold limits or pollution control device(s) will be added, as necessary, to achieve the reduction standards specified under 40 CFR 264, Subpart AA.

4.6.2.2 Demonstrating Compliance [D-8a(2)(b)]

Calculations to determine organic emissions are performed using the following assumptions:

- Maximum flow rate from LERF to ETF is 568 liters per minute.
- Emissions of organics from tanks and vessels upstream of the UV/OX process are determined from flow and transfer rates given in *Clean Air Act Requirements, WAC 173-400, As-built Documentation, Project C-018H, 242-A Evaporator/PUREX Plant Process Condensate Treatment Facility* (Adtechs 1995).
- UV/OX reaction rate constants and residence times are used to determine the amount of organics which are destroyed in the UV/OX process. These constants are given in *200 Area Effluent Treatment Facility Delisting Petition* (DOE/RL 1992).
- All organic compounds that are not destroyed in the UV/OX process are assumed to be emitted from the tanks and vessels into the vessel offgas system.
- No credit for removal of organic compounds in the vessel offgas system carbon adsorber unit is taken. The activated carbon absorbers are used if required to reduce organic emissions.

The calculation to determine organic emissions consists of the following steps:

1. Determine the quantity of organics emitted from the tanks or vessels upstream of the UV/OX process, using transfer rate values
2. Determine the concentration of organics in the waste after the UV/OX process using UV/OX reaction rates and residence times. If the ETF is configured such that the UV/OX process is not used, a residence time of zero is used in the calculations (i.e., none of the organics are destroyed)
3. Assuming all the remaining organics are emitted, determine the rate which the organics are emitted using the feed flow rate and the concentrations of organics after the UV/OX process
4. The amount of organics emitted from the vessel offgas system is the sum of the amount calculated in steps 1 and 3.

The organic emission rates and quantity of organics emitted during processing are determined using these calculations and are included in the ETF operating record.

4.6.2.3 Reevaluating Compliance with Subpart AA Standards [D-8a(2)(d)]

Calculations to determine compliance with Subpart AA will be reviewed when any of the following conditions occur at the ETF:

- Changes in the maximum feed rate to the ETF (i.e., greater than the 568 liters per minute flow rate)
- Changes in the configuration or operation of the ETF that would modify the assumptions given in Section 4.6.2.2 (e.g., taking credit for the carbon adsorbers as a control device)
- Annual operating time exceeds 310 days.

4.6.3 Applicability of Subpart CC Standards [D-8c]

The air emission standards of 40 CFR 264, Subpart CC apply to tank, surface impoundment, and container storage units that manage wastes with average volatile organic concentrations equal to or exceeding 500 parts per million by weight, based on the hazardous waste composition at the point of

origination (61 FR 59972). However, TSD units that are used solely for management of mixed waste are exempt. Mixed waste is managed at the ETF and LERF and dangerous waste also could be treated and stored at these TSD units.

TSD owner/operators are not required to determine the concentration of volatile organic compounds in a hazardous waste if the wastes are placed in waste management units that employ air emission controls that are in compliance with the Subpart CC standards. Therefore, the approach to Subpart CC compliance at the ETF and LERF is to demonstrate that the ETF and LERF meet the Subpart CC control standards (40 CFR 264.1084 - 264.1086).

4.6.3.1 Demonstrating Compliance with Subpart CC for Tanks

Since the ETF tanks already have process vents regulated under 40 CFR 264, Subpart AA (WAC 173-303-690), they are exempt from Subpart CC [40 CFR 264.1080(b)(8)].

4.6.3.2 Demonstrating Compliance with Subpart CC for Containers

Container Level 1 and Level 2 standards are met at the ETF by managing all dangerous and/or mixed wastes in U.S. Department of Transportation containers [40 CFR 264.1086(f)]. Level 1 containers are those that store more than 0.1 cubic meters and less than or equal to 0.46 cubic meters. Level 2 containers are used to store more than 0.46 cubic meters of waste which are in "light material service". Light material service is defined where a waste in the container has one or more organic constituents with a vapor pressure greater than 0.3 kilopascals at 20 C, and the total concentration of such constituents is greater than or equal to 20 percent by weight.

The monitoring requirements for Level 1 and Level 2 containers include a visual inspection when the container is received at the ETF and when the waste is initially placed in the container. Additionally, at least once every 12 months when stored onsite for 1 year or more, these containers must be inspected.

If compliant containers are not used at the ETF, alternate container management practices are used that comply with the Level 1 standards. Specifically, the Level 1 standards allow for a "container equipped with a cover and closure devices that form a continuous barrier over the container openings such that when the cover and closure devices are secured in the closed position there are no visible holes, gaps, or other open spaces into the interior of the container. The cover may be a separate cover installed on the container...or may be an integral part of the container structural design...." [40 CFR 264.1086(c)(1)(ii)]. An organic-vapor-suppressing barrier, such as foam, may also be used [40 CFR 264.1086(c)(1)(iii)]. Section 4.3 provides detail on container management practices at the ETF.

Container Level 3 standards apply when a container is used for the "treatment of a hazardous waste by a waste stabilization process" [40 CFR 264.1086(2)]. Because treatment in containers is not provided at the ETF, these standards do not apply.

4.6.3.3 Demonstrating Compliance with Subpart CC for Surface Impoundments

The Subpart CC emission standards are met at LERF through the use of a floating membrane cover that is constructed of very-low-density polyethylene that forms a continuous barrier over the entire surface area [40 CFR 264.1085(c)]. This membrane has both organic permeability properties equivalent to a high-density polyethylene cover and chemical/physical properties that maintain the material integrity for the intended service life of the material. The additional requirements for the floating cover at the LERF have been met (Section 4.5.2.4).

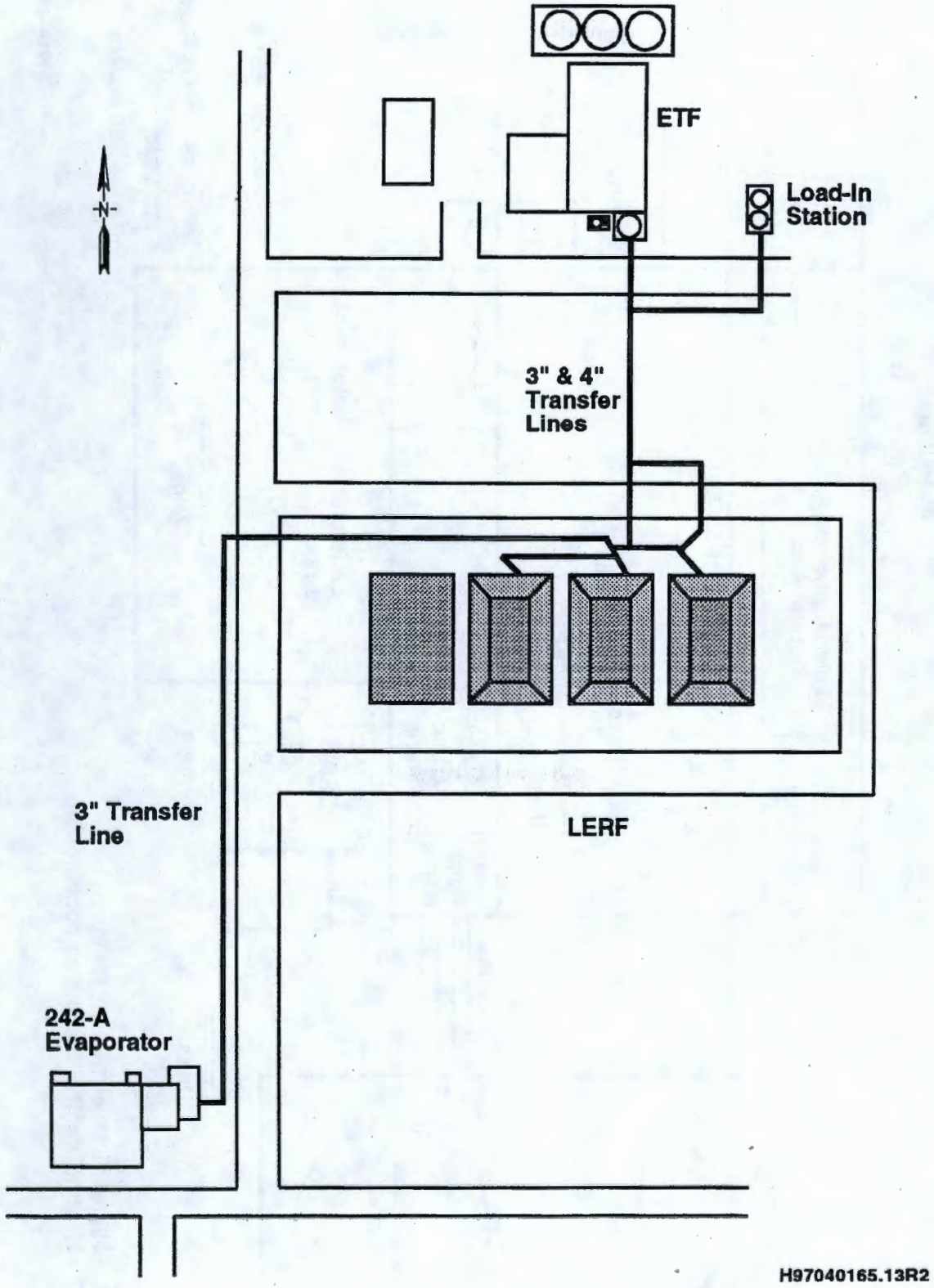

Figure 4-1. Liquid Effluent Retention Facility Layout.

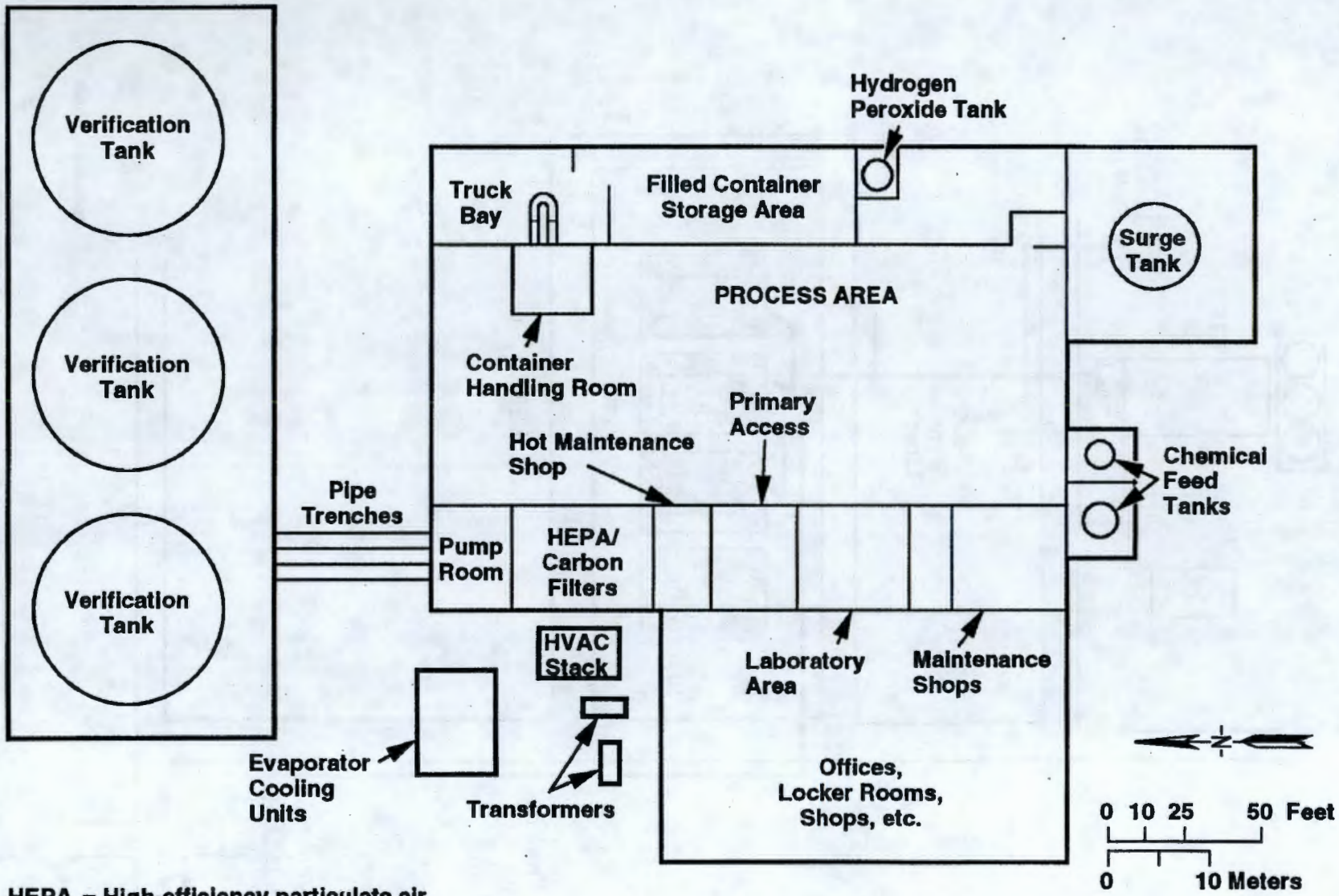

HEPA = High-efficiency particulate air
HVAC = Heating, ventilation, and air conditioning

Figure 4-2. Plan View of the 200 Area Effluent Treatment Facility.

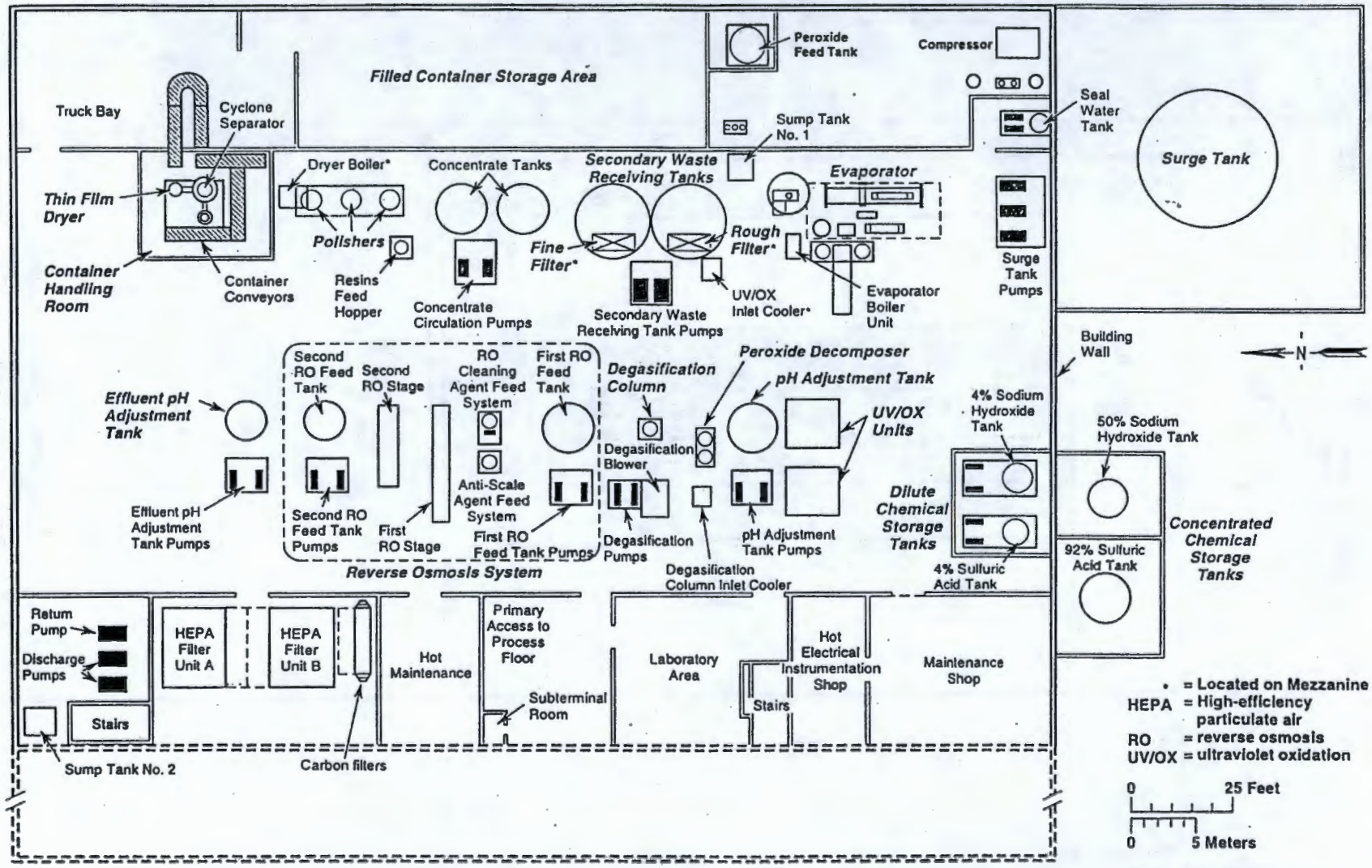

Figure 4-3. 200 Area Effluent Treatment Facility Layout.

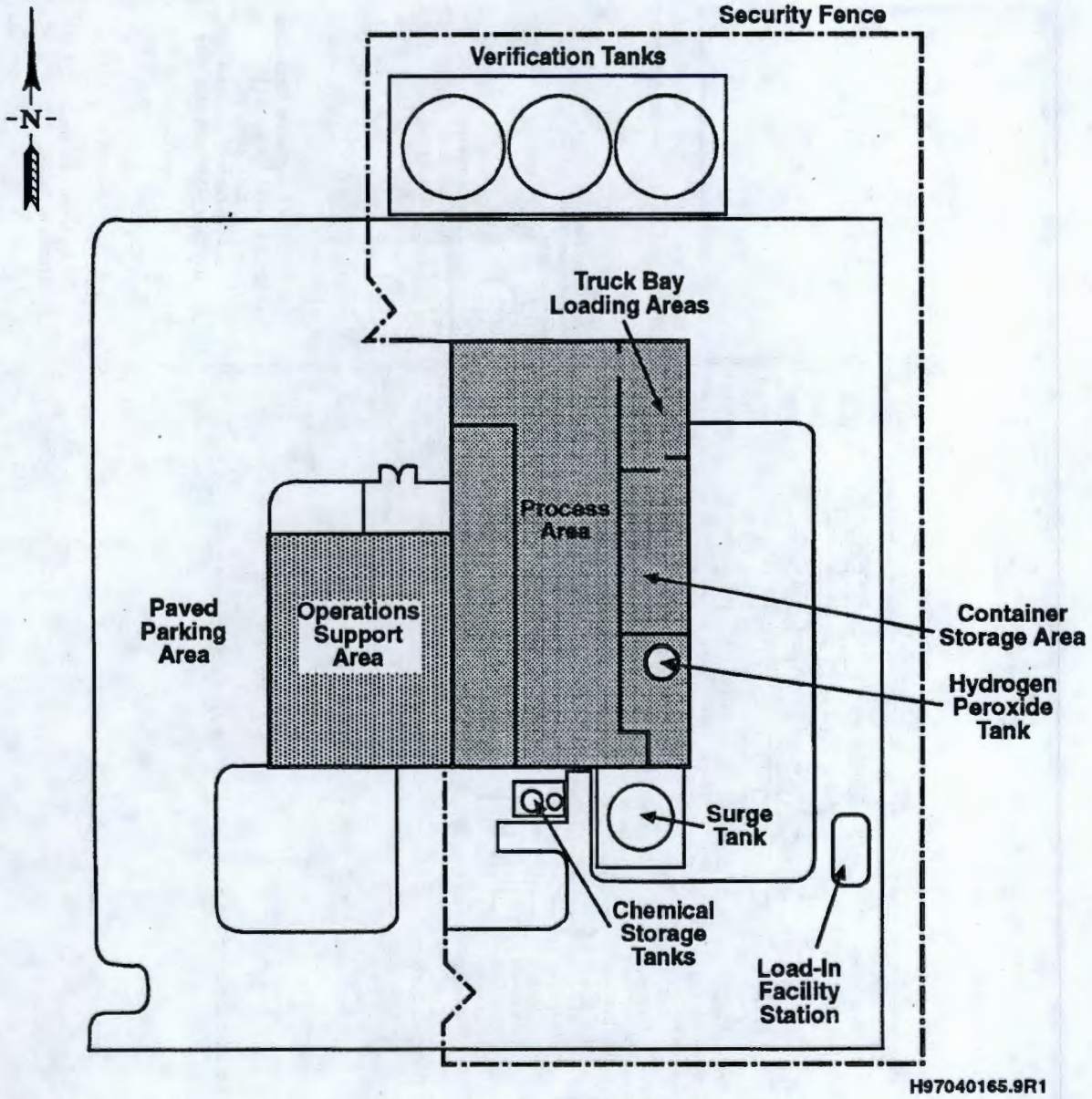

Figure 4-4. 200 Area Effluent Treatment Facility.

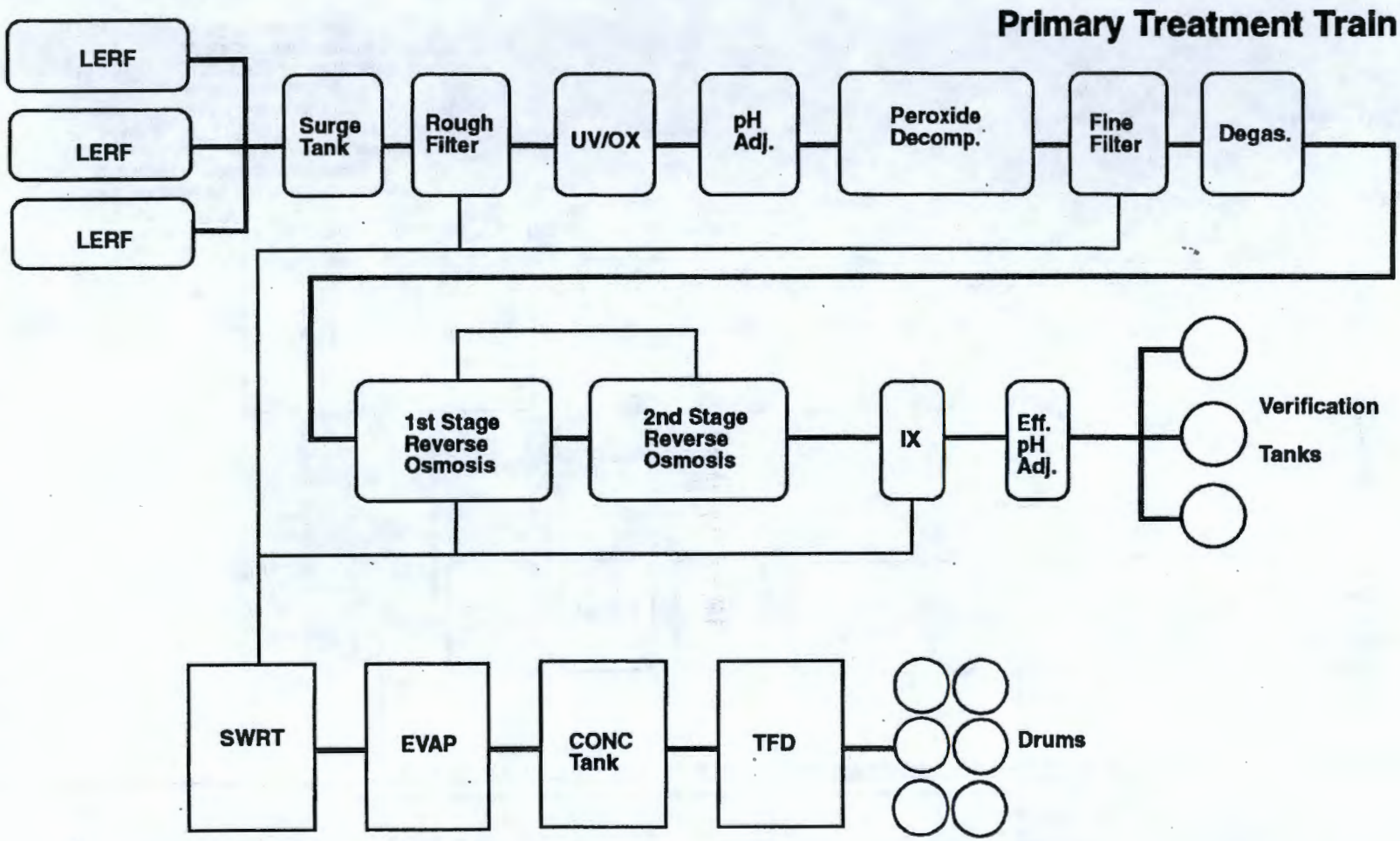

SecondaryTreatment Train

CONC Tank = Concentrate tank
Degas. = Degasification column
Eff. pH Adj. = Effluent pH adjustment tank
Evap = ETF evaporator
IX = Ion Exchange
pH Adj. = pH adjustment tank
SWRT = Secondary waste receiving tank
TFD = Thin film dryer

H97040165.11R1

Figure 4-5. Example - 200 Area Effluent Treatment Facility Configuration 1.

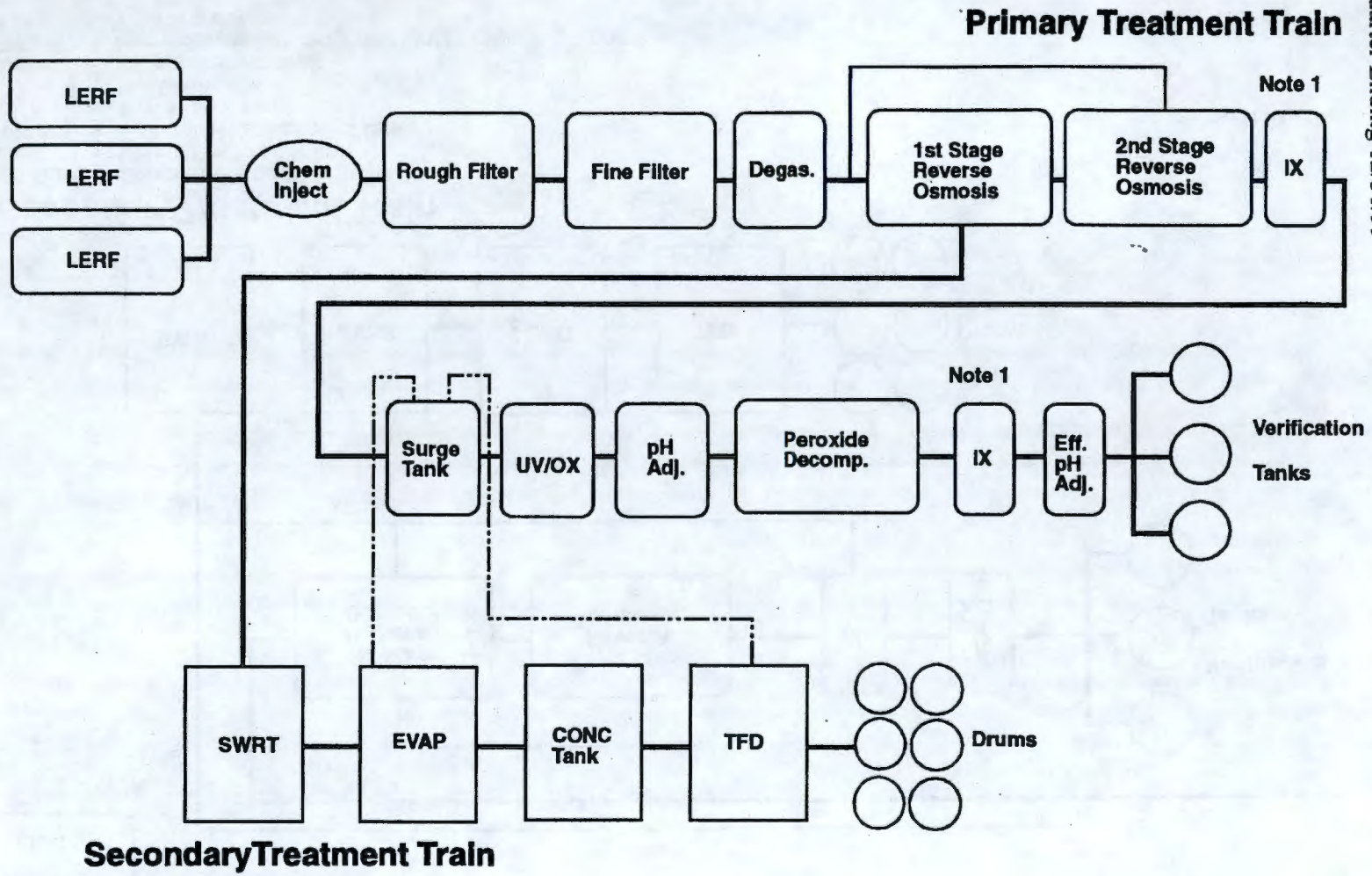

Note1: IX can be in either location
CONC Tank = Concentrate tank
Degas. = Degasification column
Eff. pH Adj. = Effluent pH adjustment tank
Evap = ETF evaporator
IX = Ion exchange
pH Adj. = pH adjustment tank
SWRT = Secondary waste receiving tank
TFD = Thin film dryer

H97040165.12R1

Figure 4-6. Example - 200 Area Effluent Treatment Facility Configuration 2.

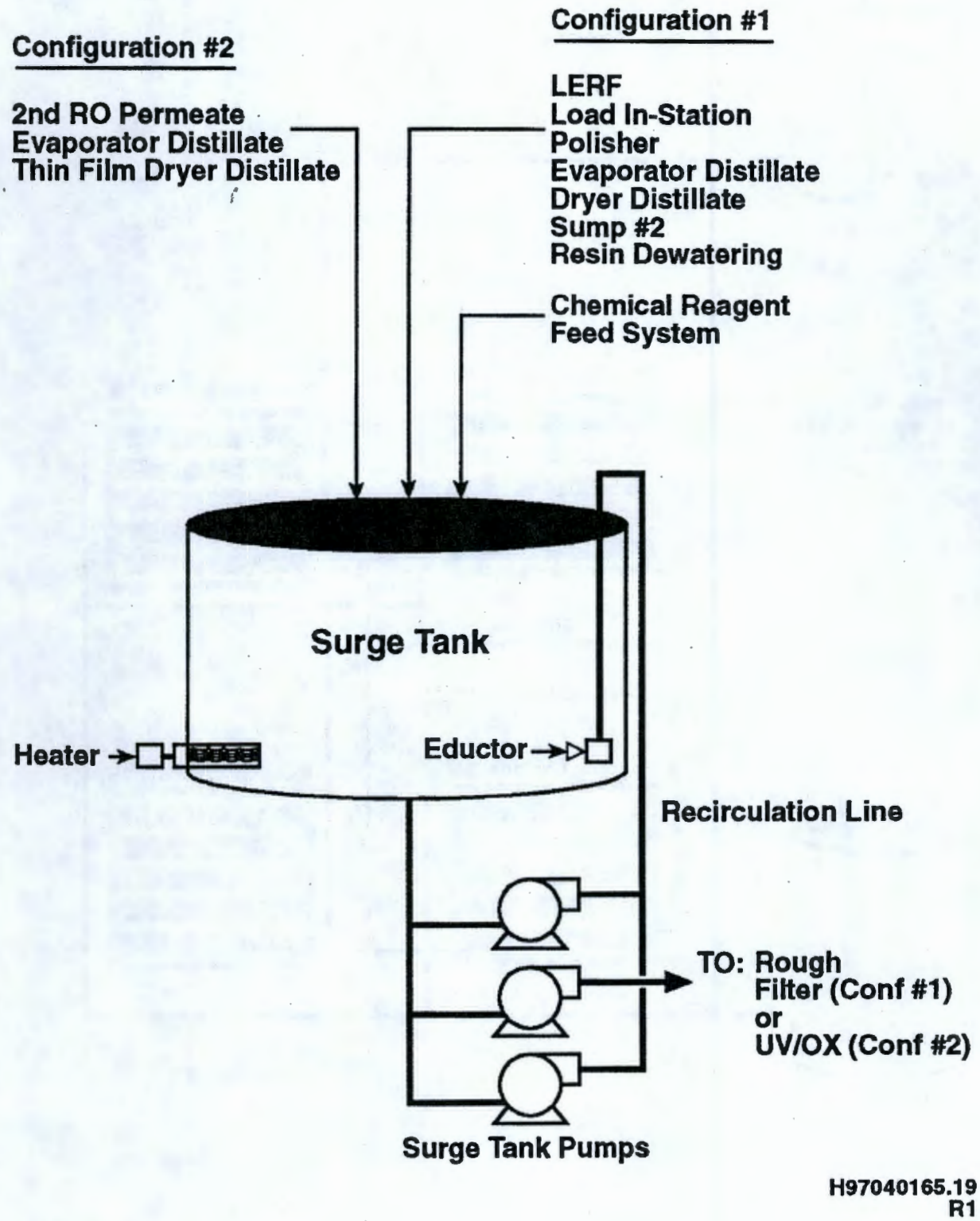

Figure 4-7. Surge Tank.

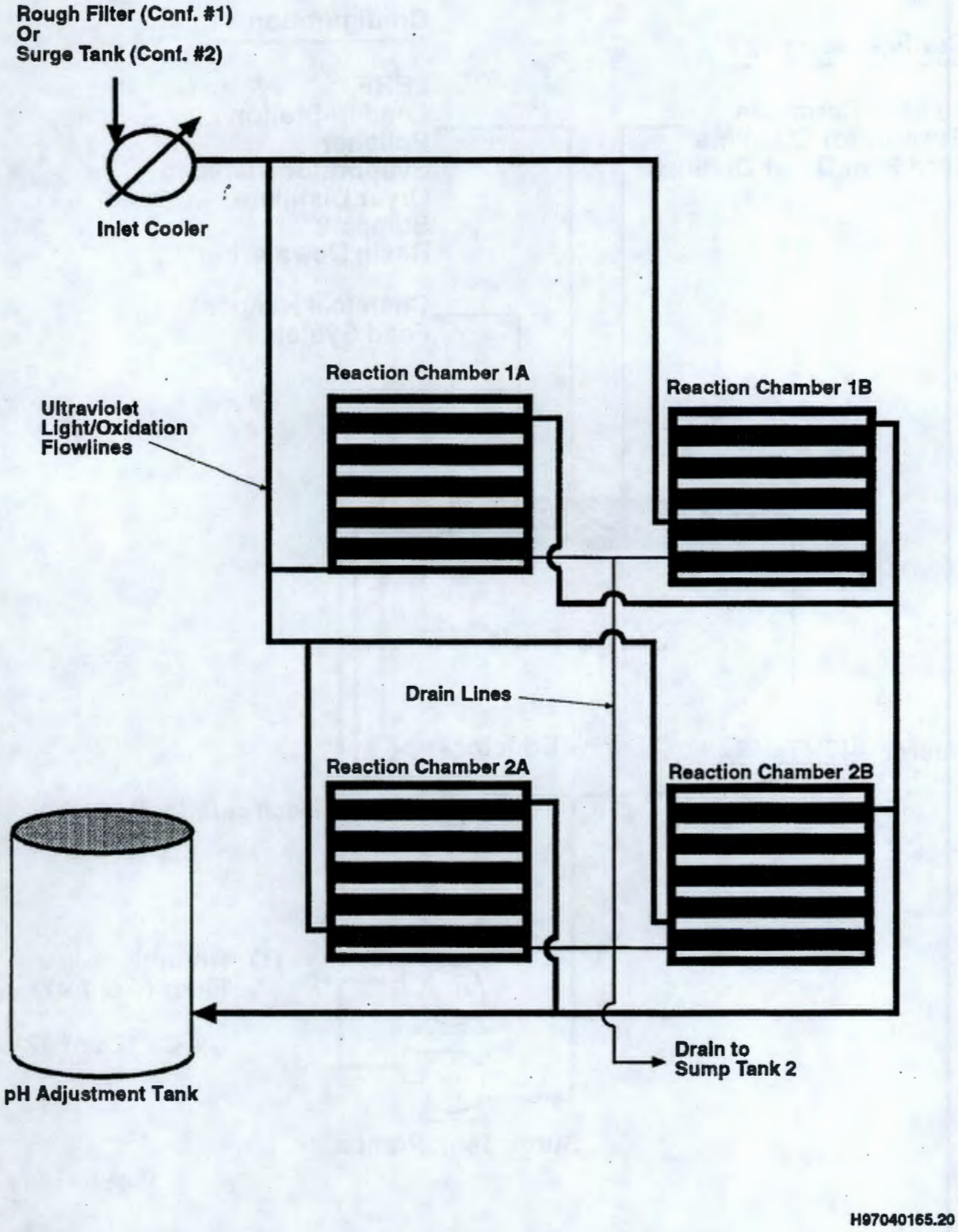

Figure 4-8. Ultraviolet Light/Oxidation Unit.

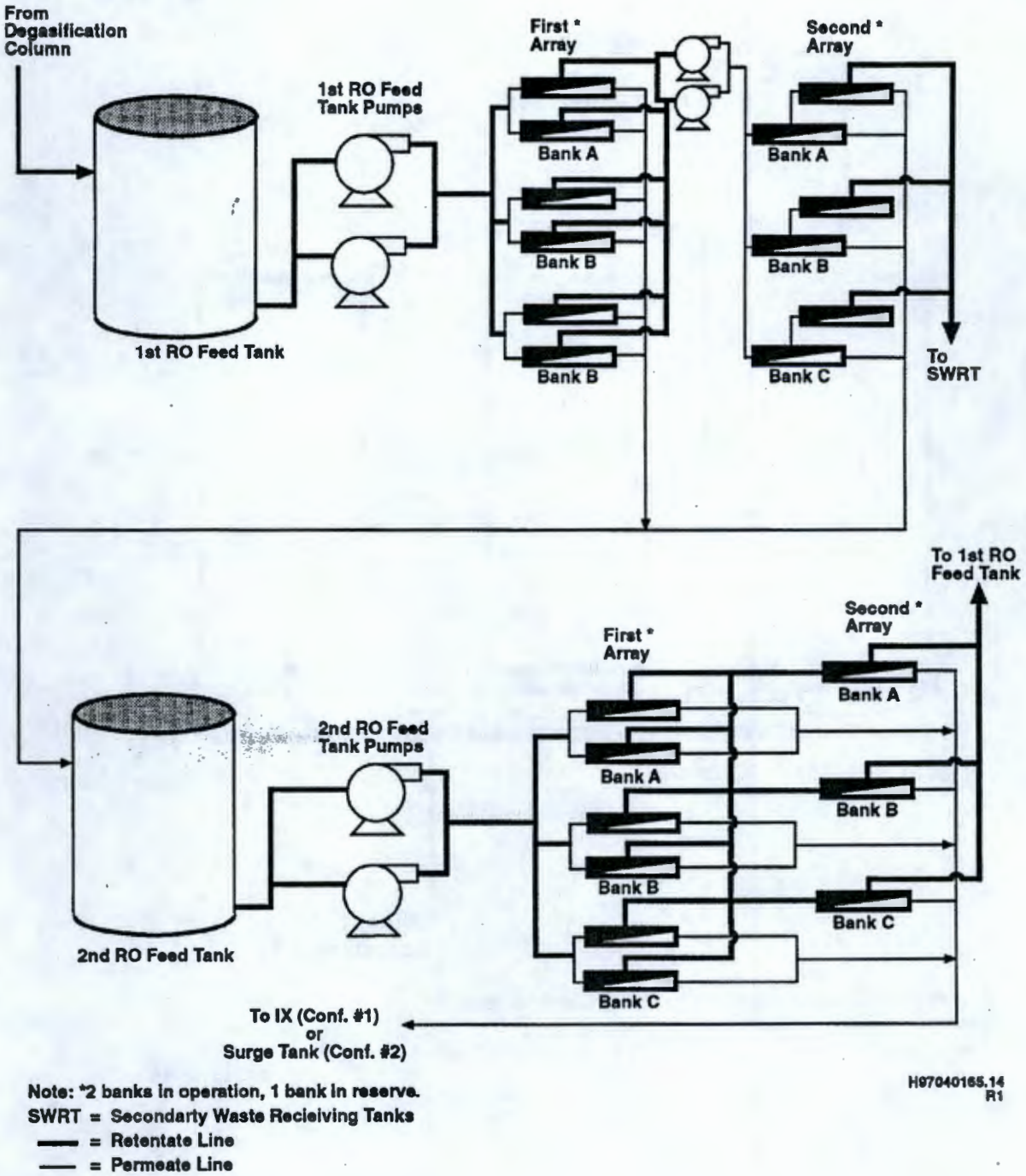

Note: *2 banks in operation, 1 bank in reserve.
SWRT = Secondarty Waste Recieiving Tanks
▬ = Retentate Line
— = Permeate Line

Figure 4-9. Reverse Osmosis Unit.

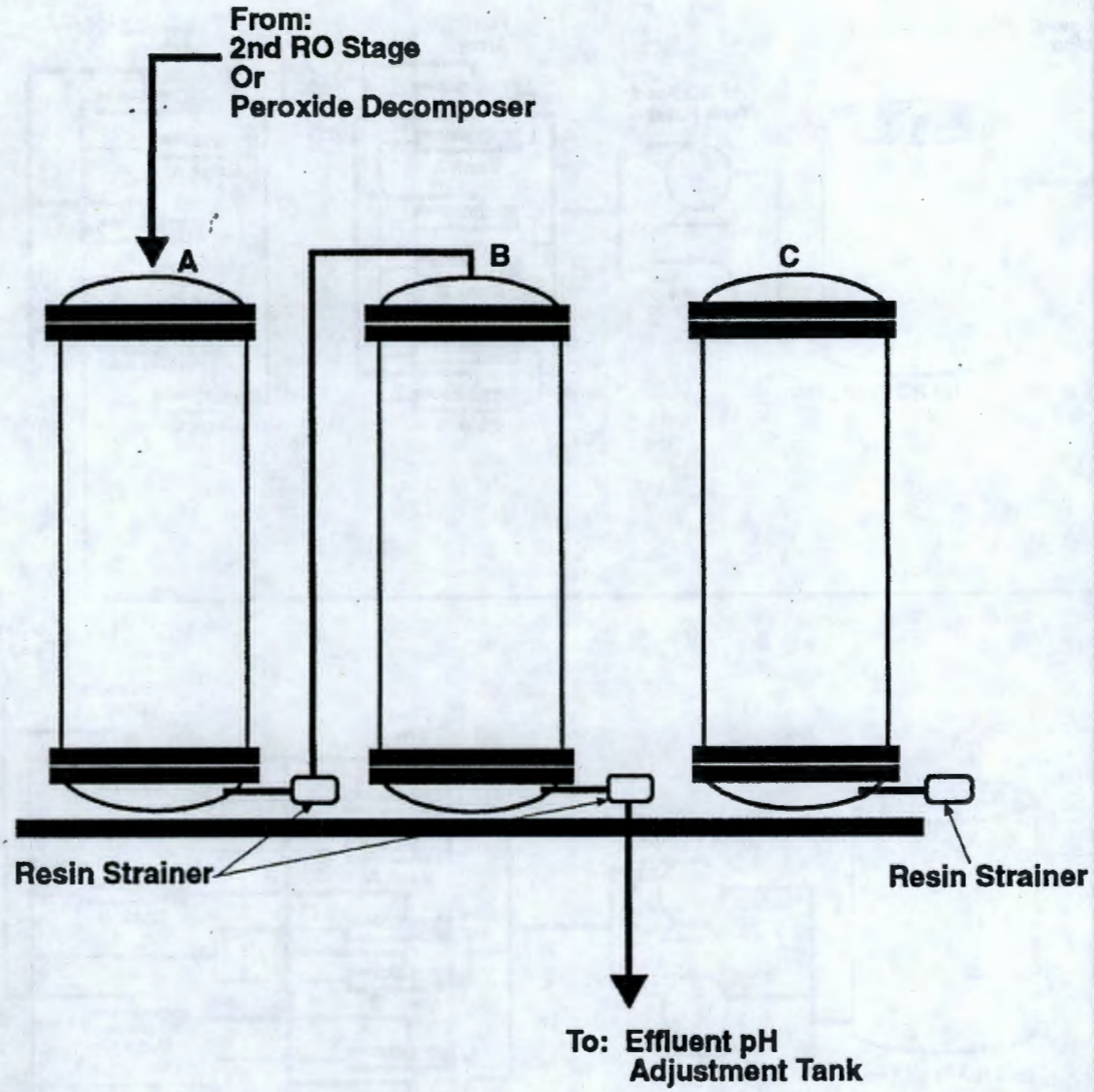

NOTE: Example Configuration- Column A and B in Operation, Column C In Standby Mode

H97040165.18

Figure 4-10. Ion Exchange Unit.

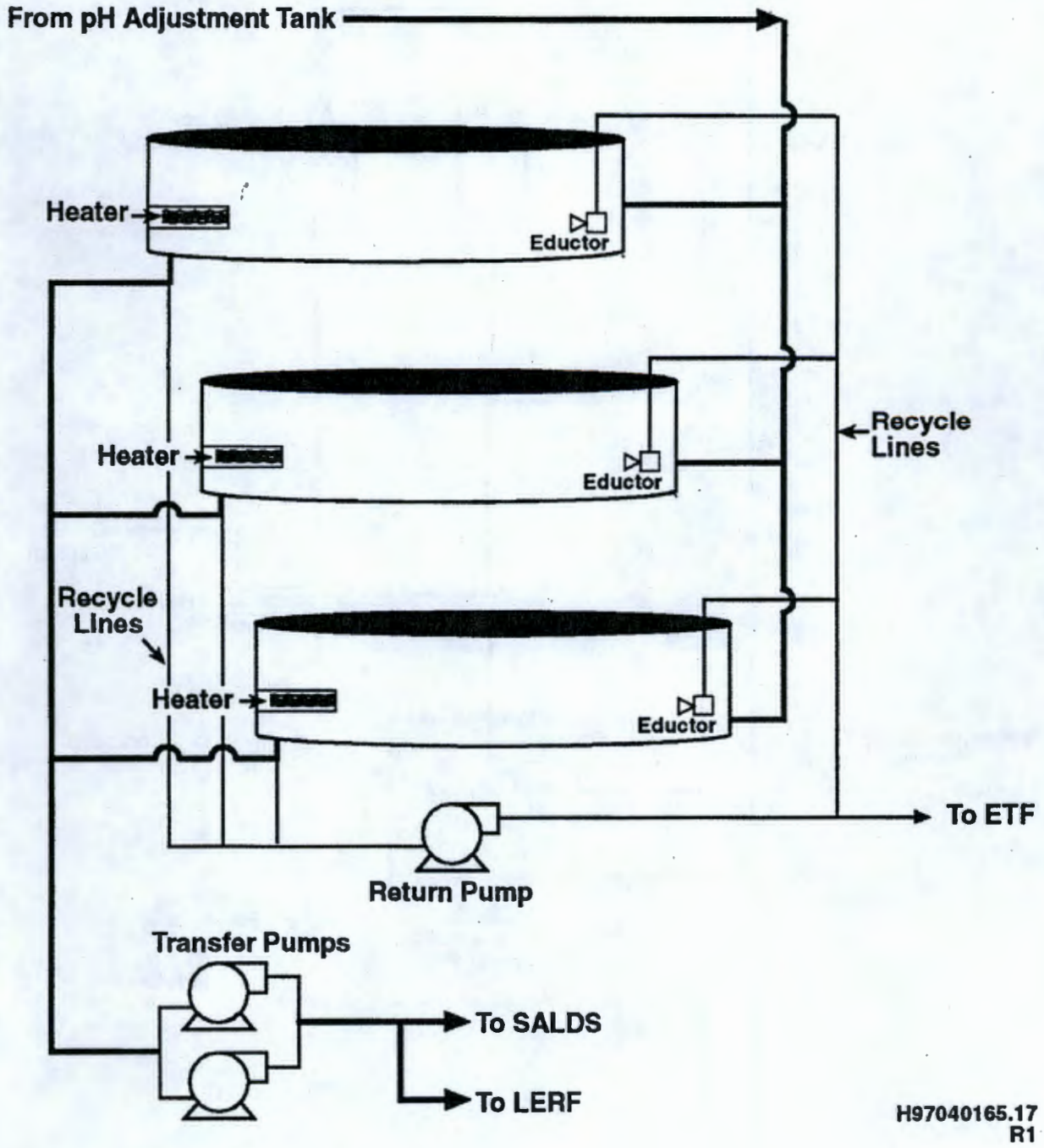

Figure 4-11. Verification Tanks.

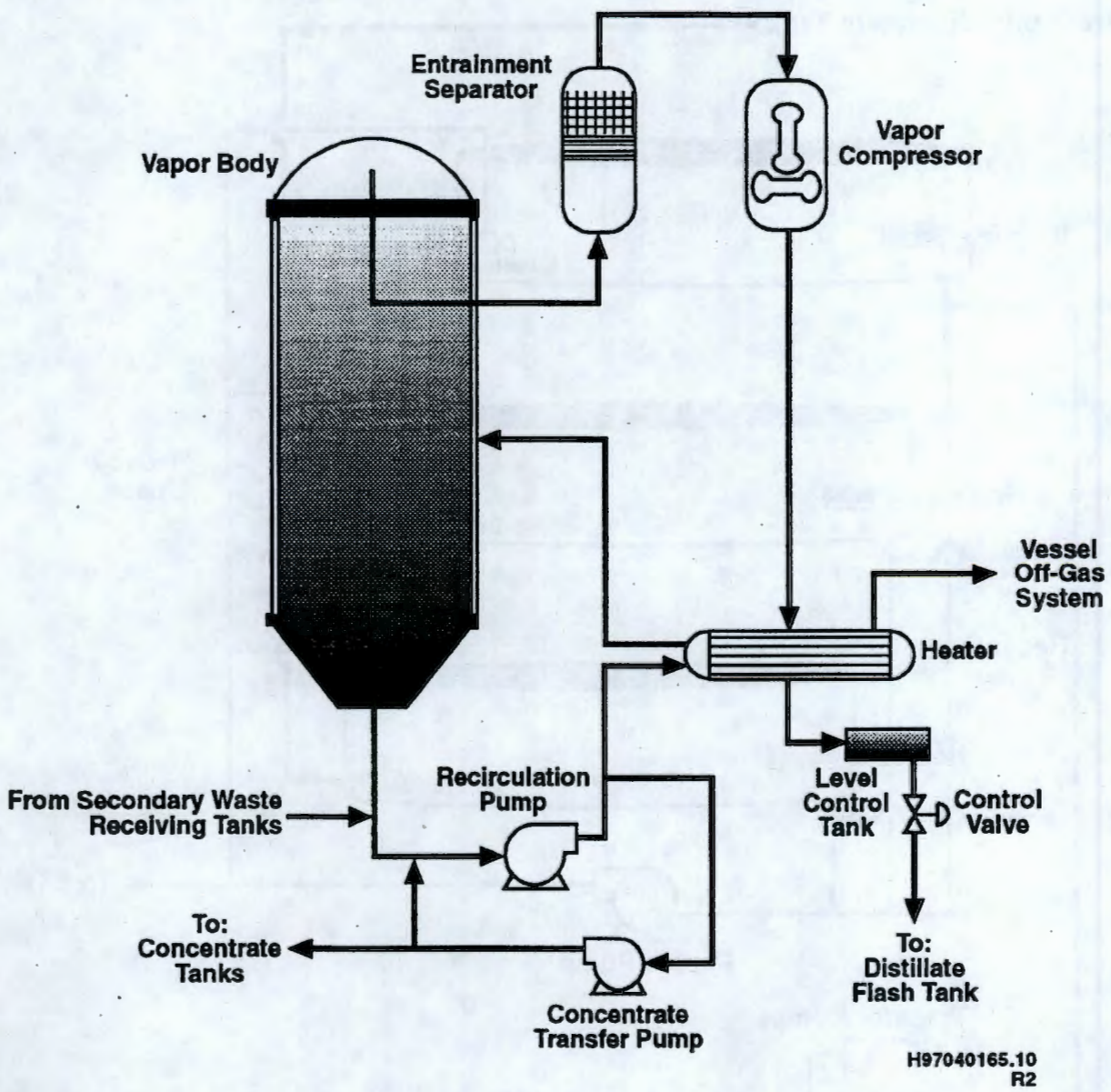

Figure 4-12. Effluent Treatment Facility Evaporator.

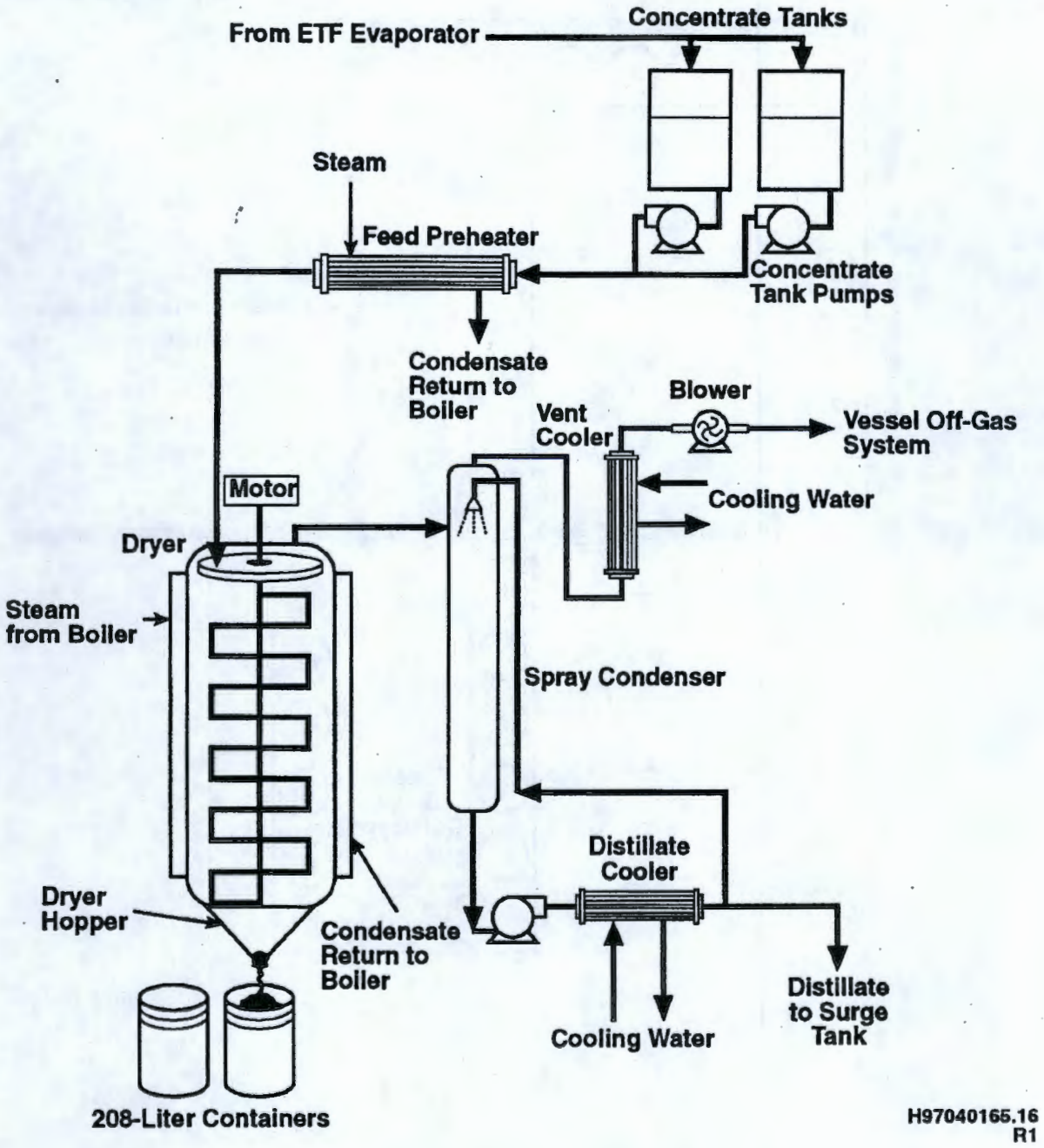

Figure 4-13. Thin Film Dryer.

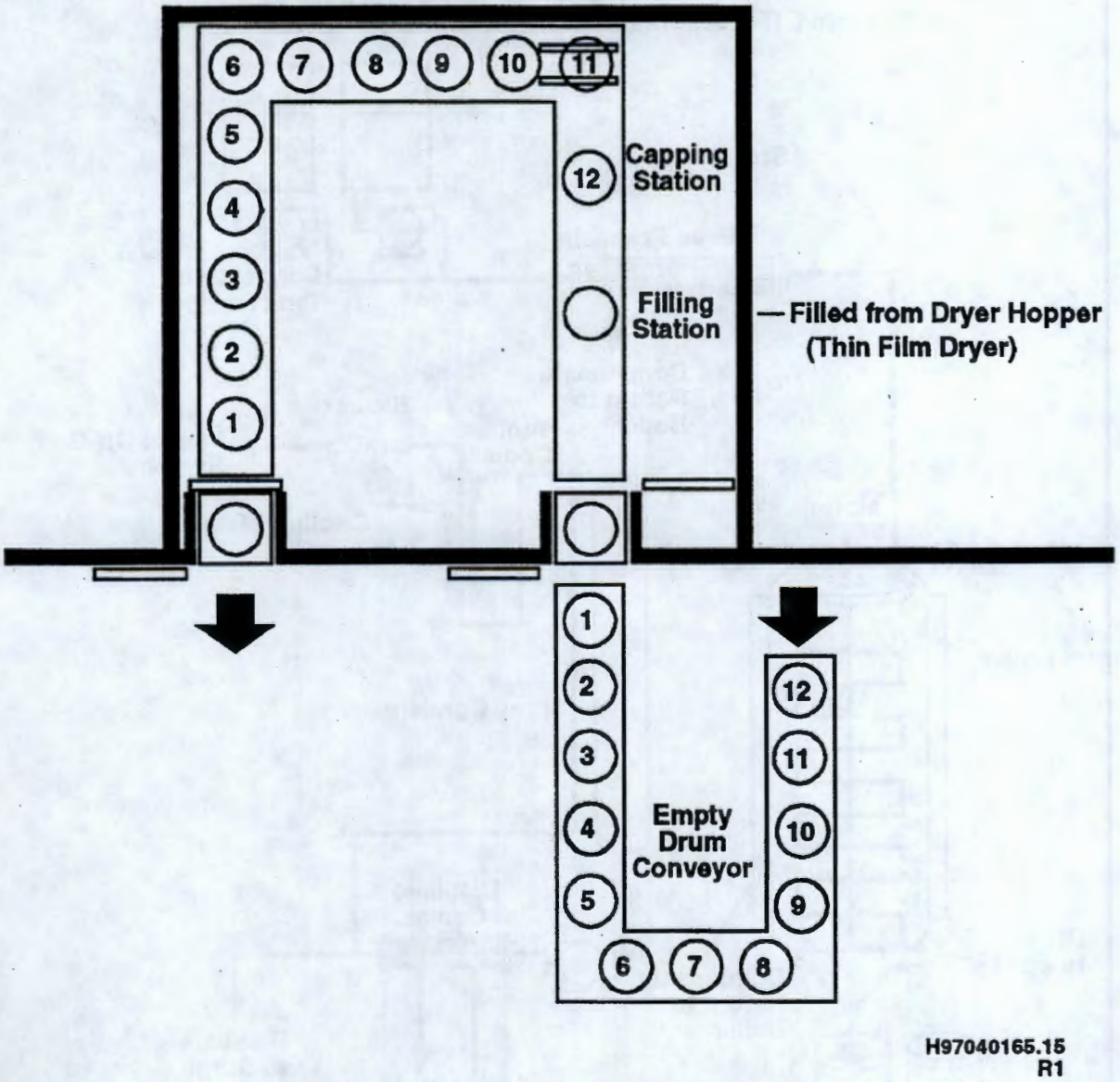

Figure 4-14. Container Handling System.

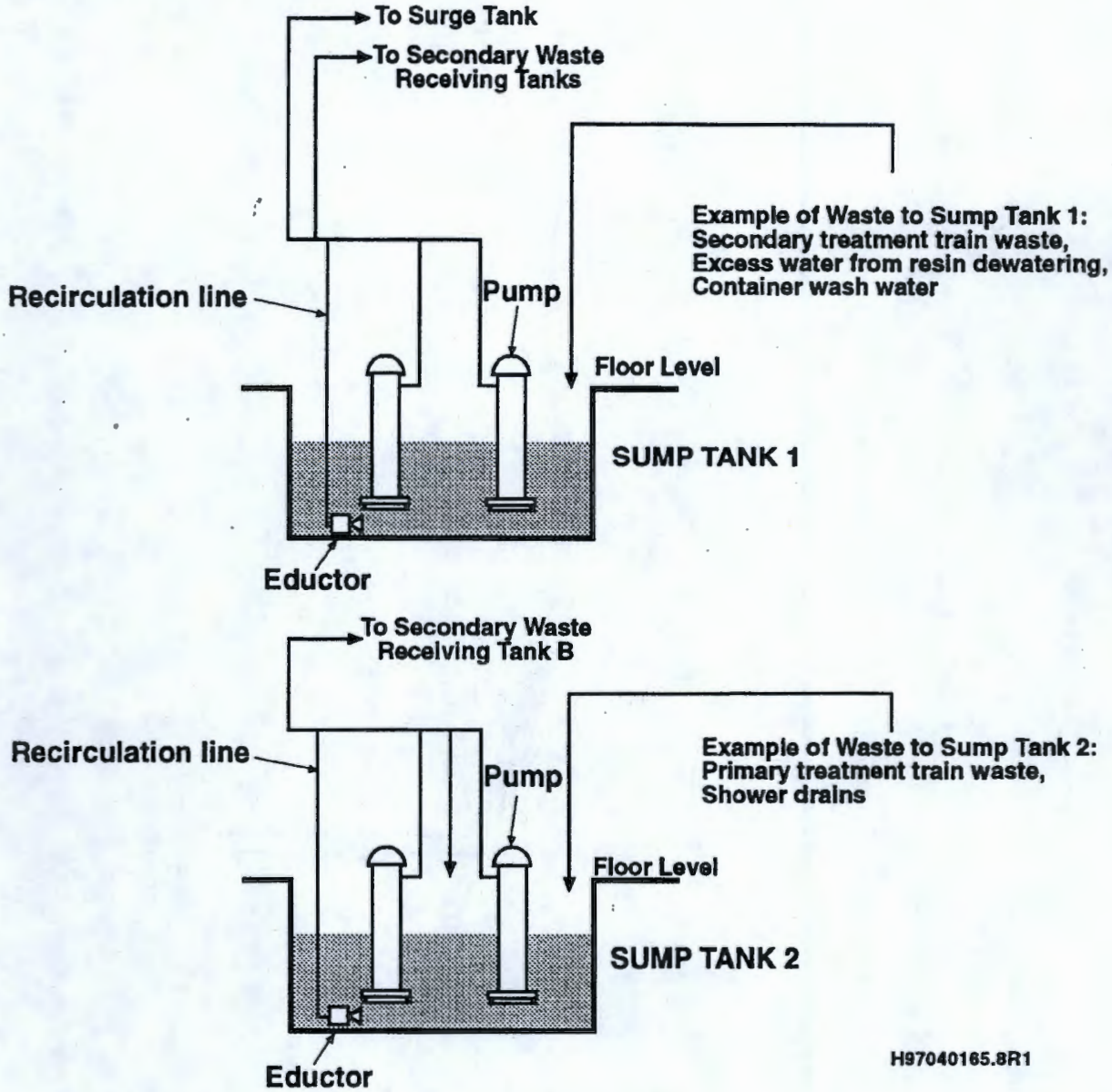

Figure 4-15. Effluent Treatment Facility Sump Tanks.

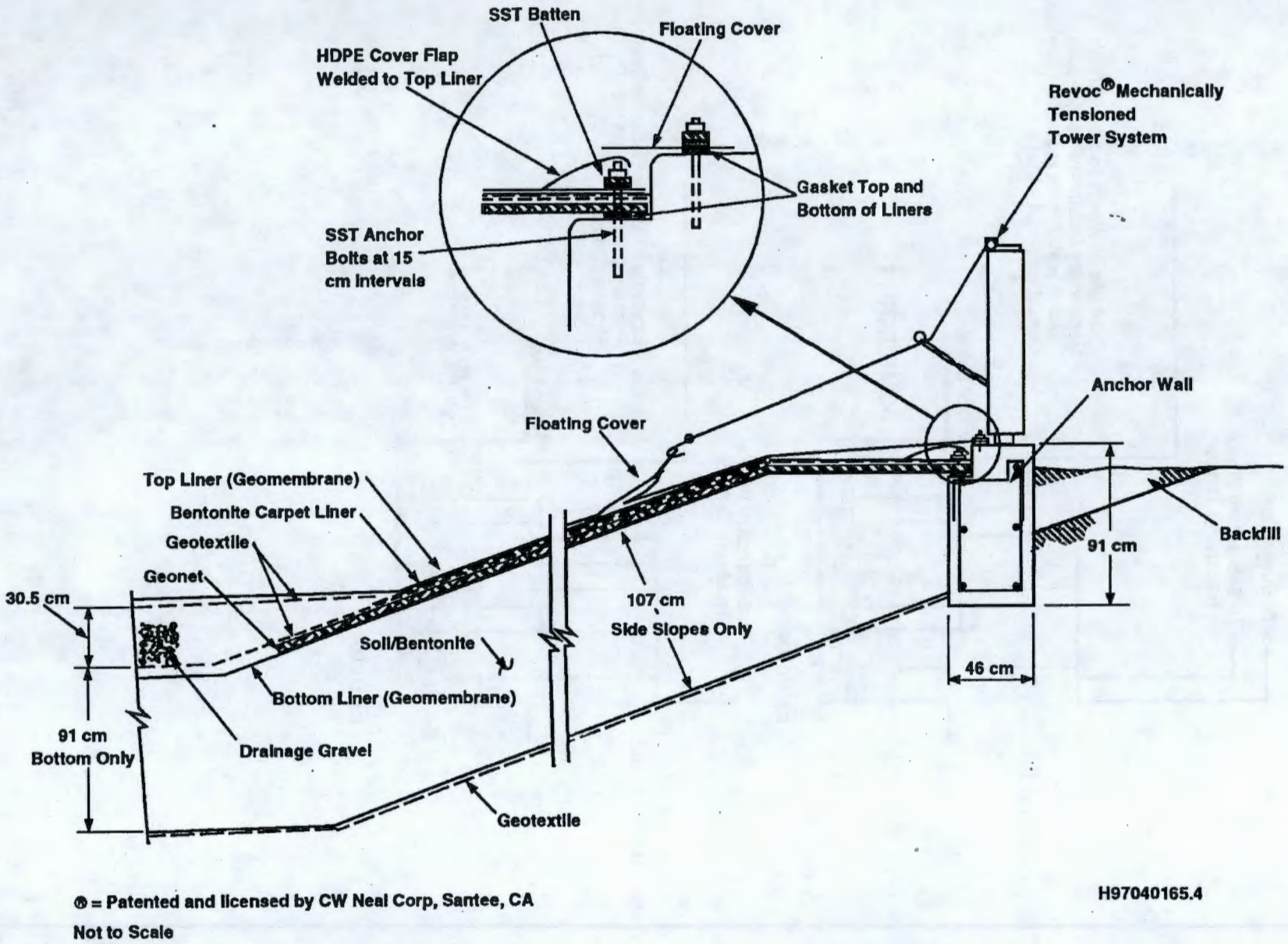

Figure 4-16. Liner Anchor Wall and Cover Tension System.

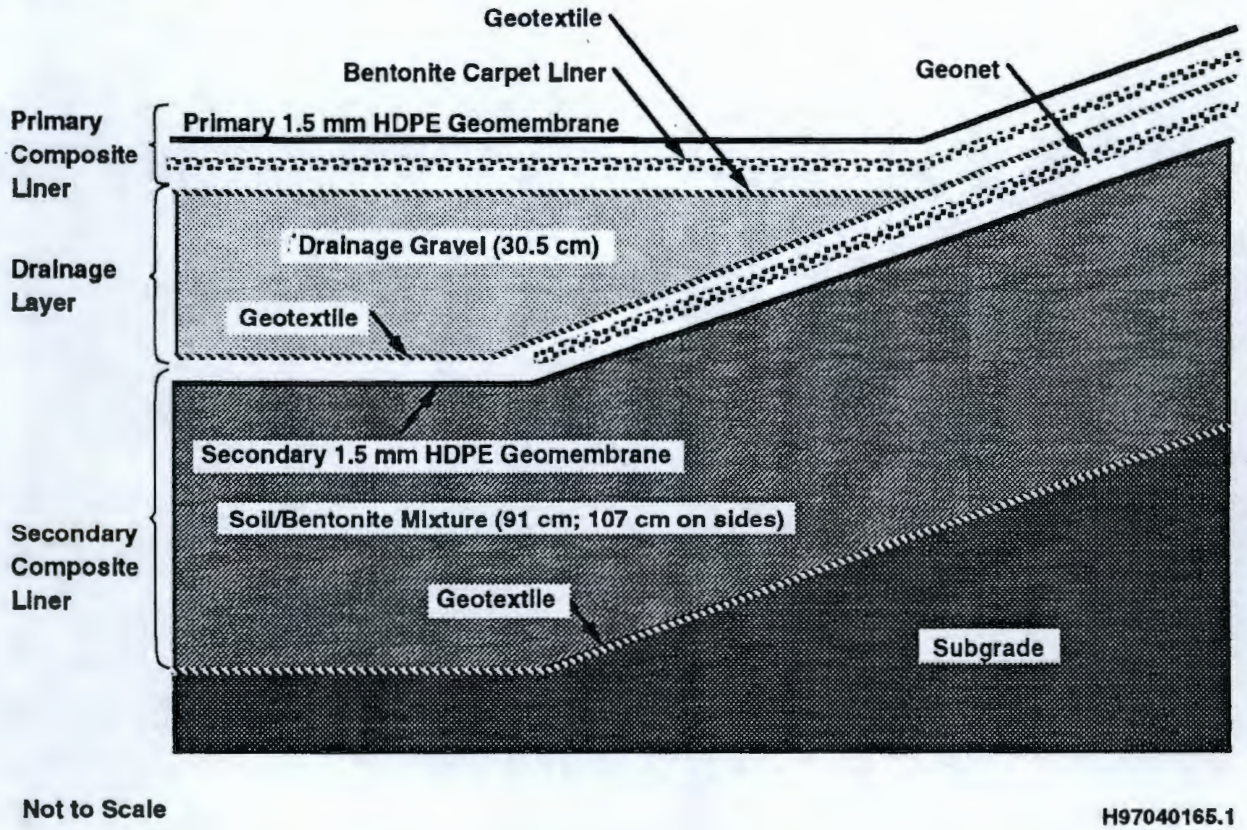

Figure 4-17. Liner System Schematic.

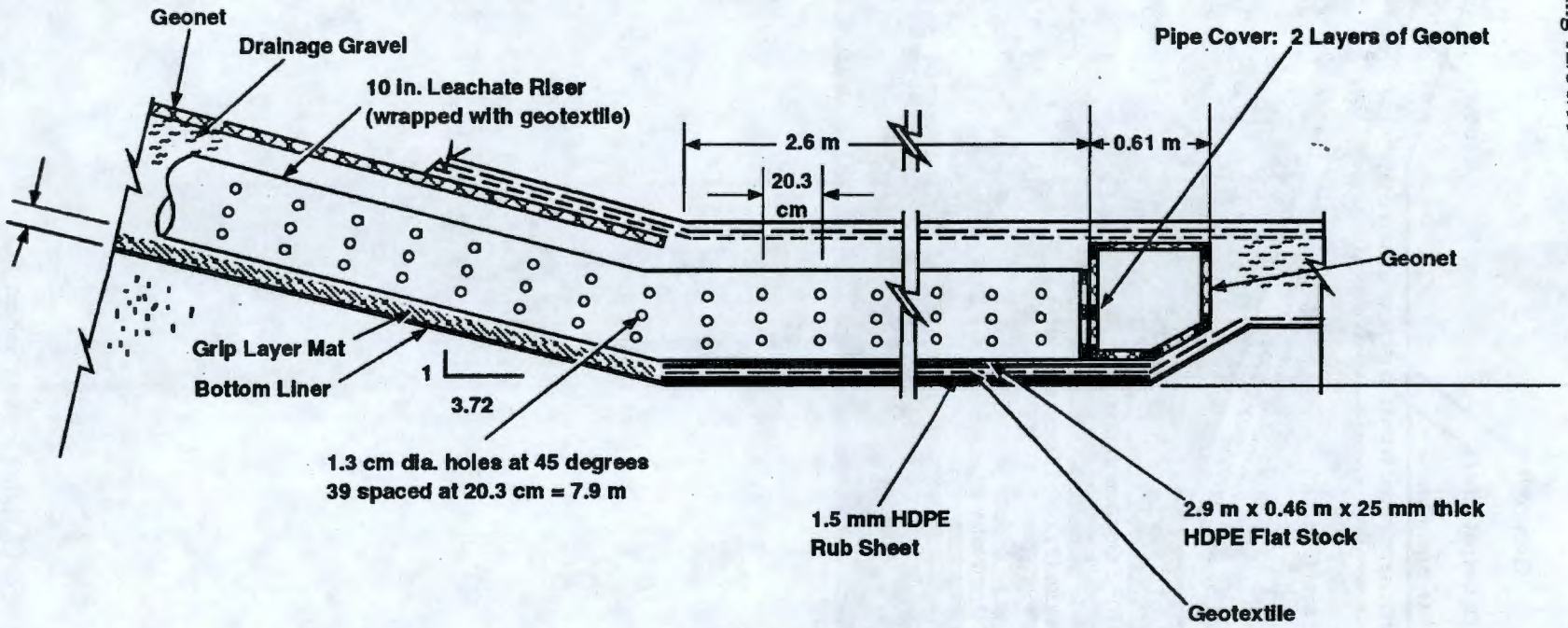

Section View

HDPE: High Density Polyethylene

Not to Scale

H97040165.3

Figure 4-18. Detail of Leachate Collection Sump.

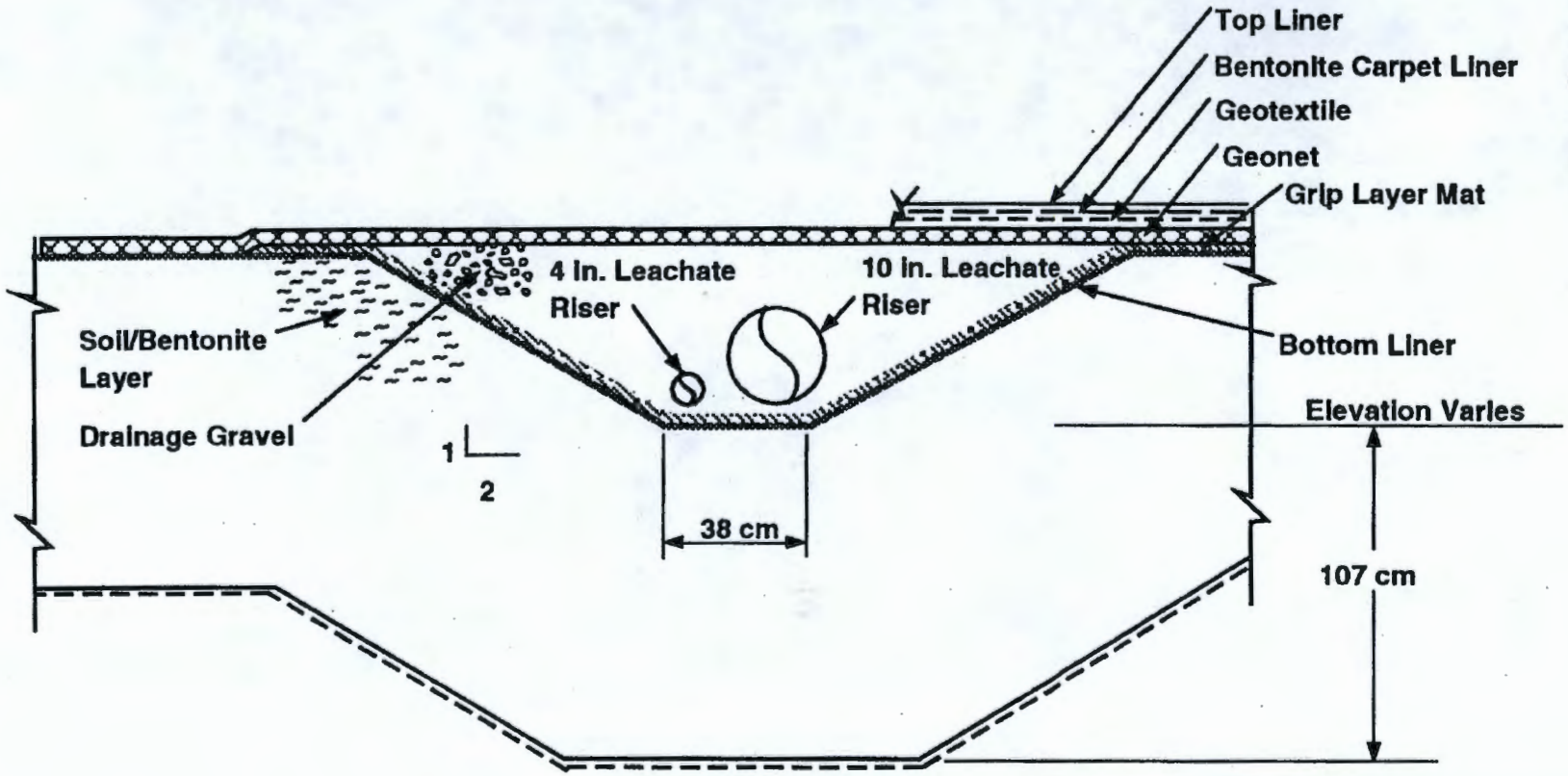

Section View
Not to Scale

H97040165.2

Figure 4-19. Detail of Leachate Riser Trench.

ETF Tables Table 4-1. 200 Area Effluent Treatment Facility Tank Systems Information.

(sheet 1 of 2)

Tank Description	Material of Construction	Maximum Tank Capacity[1] liters	Inner diameter meters	Height meters	Shell Thickness[2] centimeters	Corrosion Protection[3]
Load-in tanks (2)	304 SS	37,900	3.6	4.7	0.64	Type 304 SS
Surge tank	304 SS	461,820	7.9	9.2	0.48	Type 304 SS
pH adjustment tank	304 SS	16,660	3.0	2.5	0.64	Type 304 SS
First RO feed tank	304 SS	20,440	3.0	3.2	0.64	Type 304 SS
Second RO feed tank	304 SS	7,600	Nonround tank 3.0 m x 1.5 m	1.5	0.48 w/rib stiffeners	Type 304 SS
Effluent pH adjustment tank	304 SS	14,390	2.4	3.6	0.64	Type 304 SS
Verification tanks (3)	Carbon steel with epoxy lining	2,763,340	18.3	11.4	0.79	epoxy coating
Secondary waste receiving tanks (2)	304 SS	75,700	4.3	5.7	0.64	Type 304 SS
Concentrate tanks (2)	316L SS	24,980	3.0	3.8	0.64	Type 316 SS
ETF evaporator (Vapor Body)	Alloy 625	20,800	2.4	6.8	variable	Alloy 625
Distillate flash tank	304 SS	950	Horizontal tank 0.76	Length 2.2	0.7	304 SS
Sump tank 1	304 SS	4,160	1.5 x 1.5	3.4	3/16	304 SS
Sump tank 2	304 SS	4,160	1.5 x 1.5	3.4	3/16	304 SS

Table 4-1. 200 Area Effluent Treatment Facility Tank Systems Information.

(sheet 2 of 2)

Tank description	Liner materials	Pressure controls	Foundation materials	Structural support	Seams	Connections
Load-in tanks (2)	None	vent to atmosphere	concrete slab	SS skirt bolted to concrete	welded	flanged
Surge tank	None	pressure indicator/vacuum breaker valve	reinforced concrete ring plus concrete slab	structural steel on concrete base	welded	flanged
pH adjustment tank	None	pressure indicator/vent to VOG	concrete slab	carbon steel skirt	welded	flanged
First RO feed tank	None	pressure indicator/vent to VOG	concrete slab	carbon steel skirt	welded	flanged
Second RO feed tank	None	pressure indicator/vent to VOG	concrete slab	carbon steel frame	welded	flanged
Effluent pH adjustment tank	None	pressure indicator/vent to VOG	concrete slab	carbon steel skirt	welded	flanged
Verification tanks (3)	Epoxy	pressure indicator/filtered vent to atmosphere	reinforced concrete ring plus concrete slab	structural steel on concrete base	welded	flanged
Secondary waste receiving tanks (2)	None	pressure indicator/vent to VOG	concrete slab	carbon steel skirt	welded	flanged
Concentrate tanks (2)	None	pressure indicator/vent to VOG	concrete slab	carbon steel skirt	welded	flanged
ETF evaporator (vapor body)	None	pressure indicator/vapor vent - to DFT/VOG	concrete slab	carbon steel frame	welded	flanged
Distillate flash tank	None	vent to VOG	concrete slab	carbon steel I-beam and cradle	welded	flanged
Sump tank 1	None	vent to VOG	concrete containment	reinforced concrete containment basin	welded	flanged
Sump tank 2	None	vent to VOG	concrete containment	reinforced concrete containment basin	welded	flanged

1. The maximum operating volume of the tanks is identified. For the load-in tanks and the second RO feed tank, the maximum operating volume is also the operating capacity.
2. The nominal thickness of ETF tanks is represented.
3. Type 304 SS, 304L, 316 SS and alloy 625 provide corrosion protection.
   304 SS = stainless steel type 304 or 304L.
   316L SS = stainless steel type 316L.
   DFT = distillate flash tank.
   VOG = vessel offgas system.

Table 4-2. Ancillary Equipment and Material Data. (sheet 1 of 2)

System	Ancillary equipment	Number	Material
Load-in tanks	Load-in/transfer pumps (2)	P-103A/-103B	316 SS
	Load-in filters (3)	59A-FL-001/-002/-003	304 SS
Surge tank	Surge tank pumps (3)	2025E-60A-P-1A/-1B/-1C	304 SS
Rough filter	Rough filter	2025E-60B-FL-1	304 SS
UV/OX	UV oxidation inlet cooler	2025E-60B-E-1	316 SS
	UV oxidizers (4)	2025E-60D-UV-1A/-1B/-2A/-2B	316 SS
pH adjustment	pH adjustment pumps (2)	2025E-60C-P-1A/-1B	304 SS
Peroxide decomposer	H_2O_2 decomposers (2)	2025E-60D-CO-1A/-1B	CS with epoxy coating
Fine filter	Fine filter	2025E-60B-FL-2	304 SS
Degasification	Degasification column inlet cooler	2025E-60E-E-1	316 SS
	Degasification column	2025E-60E-CO-1	FRP
	Degasification pumps (2)	2025E-60E-P-1A/-1B	316 SS
RO	Feed/booster pumps (6)	2025E-60F-P-1A/-1B/-2A/-2B/-3A/-3B	304 SS
	Reverse osmosis arrays (21)	2025E-60F-RO-01 through -21	Membranes: polyamide Outer piping: 304 SS
IX/Polishers	Polishers (3)	2025E-60G-IX-1A/-1B-1C	CS with epoxy coating
	Resins strainers (3)	2025E-60G-S-1A/-1B/-1C	304 SS
Effluent pH adjustment	Recirculation/transfer pumps (2)	2025E-60C-P-2A/-2B	304 SS/PVC
Verification tanks	Return pump	2025E-60H-P-1	304 SS
	Transfer pumps (2)	2025E-60H-P-2A/-2B	
Secondary waste receiving tanks	Secondary waste feed pumps (2)	2025E-60I-P-1A/-1B	304 SS

Table 4-2. Ancillary Equipment and Material Data. (sheet 2 of 2)

System	Ancillary equipment	Number	Material
ETF evaporator system	Feed/distillate heat exchanger	2025E-60I-E-02	Tubes: 316 SS Shell: 304 SS
	Heater (reboiler)	2025E-60I-E-01	Tubes: alloy 625 Shell: 304 SS
	Recirculation pump	2025E-60I-P-02	316 SS
	Concentrate transfer pump	2025E-60I-P-04	316 SS
	Entrainment separator	2025E-60I-DE-01	Top section: 316 SS Bottom section: alloy 625
	Vapor compressor (incl. silencers)	2025E-60I-C-01	304 SS
	Silencer drain pump	2025E-60I-P-06	316 SS
	Level control tank	2025E-60I-TK-5	304 SS
	Distillate flash tank pump	2025E-60I-P-03	316 SS
Concentrate tanks	Concentrate circulation pumps (2)	2025E-60J-P-1A/-1B	316 SS
Thin film dryer	Concentrate feed pump	2025E-60J-P-2	316 SS
	Dryer feed preheater	2025E-60J-E-3	316 SS
	Thin film dryer	2025E-60J-D-1	Interior surfaces: alloy 625 Rotor and blades: 316 SS
	Powder hopper	2025E-60J-H-1	316 SS
	Spray condenser	2025E-60J-DE-01	316 SS
	Distillate condenser	2025E-60J-CND-01	Tubes: 304 SS Shell: CS
	Dryer distillate pump	2025E-60J-P-3	316 SS
Resin dewatering	Dewatering pump	2025E-80E-P-1	

CS = carbon steel.
FRP = fiberglass reinforced plastic.
PVC = polyvinyl chloride.
RO = reverse osmosis.
UV = ultraviolet.
304 SS = stainless steel type 304 or 304L.
316 SS = stainless steel type 316 or 316L.

Table 4-3. Concrete and Masonry Coatings.

Coating	Minimum wet film thickness (mil)	Percentage of film forming solids per volume (%)	Minimum dry film thickness (mil)
Concrete and masonry			
Prime: Amercoat-187*	4.5	22.0	1.0
Second: Amercoat-33	6.4	23.46	1.5
Finish: Amercoat-33	6.4	23.46	1.5
Or			
Prime: Amercoat-385	5-6	66	3-4
Topcoat: Amercoat-450HS	3-4	66	2-2.5
High traffic, container storage area			
Filler: Ameron Nu-Klad 114A**	--	100	--
Prime: Amercoat-105A	2-3	100	2-3
Topcoat: Amercoat-120	20-30	100	20-30

*Amercoat is a trademark of Ameron, Incorporation.
**Nu-Klad is a trademark of Ameron, Incorporation.

1

Table 4-4. Geomembrane Material Specifications.

Property	Value
Specific gravity	0.932 to 0.950
Melt flow index	1.0 g/10 min., maximum
Thickness (thickness of flow marks shall not exceed 200% of the nominal liner thickness)	60 mil ± 10% (1.5 mm ± 10%)
Carbon black content	1.8 to 3%, bottom liner 2 to 3%, top liner
Tensile properties (each direction)	
Tensile strength at yield	21.5 kgf/cm width, minimum
Tensile strength at break	32.2 kgf/cm width, minimum
Elongation at yield	10%, minimum
Elongation at break	500%, minimum
Tear resistance	13.6 kgf, minimum
Puncture resistance	31.3 kgf, minimum
Low temperature/brittleness	-40 C, maximum
Dimensional (% change each direction)	±2%, maximum
Environmental stress crack	750 h, minimum
Water absorption	0.1 maximum and weight change
Hydrostatic resistance	316,000 kgf/m^2
Oxidation induction time (200 C/1 atm. O_2)	90 min, minutes

Reference: Construction Specifications (KEH 1990b). Format uses NSF 54 table for high-density polyethylene as a guide (NSF 1985). However, RCRA values for dimensional stability and environmental stress crack have been added.

%	= percent	max	= maximum
g	= gram	kgf	= kilograms force
min	= minute	m	= meters
h	= hour	mm	= millimeters

Table 4-5. Drainage Gravel Specifications.

Property	Value
Sieve size	
25 millimeters	100 wt% passing
19 millimeters	80 - 100 wt% passing
9.5 millimeters	10 - 40 wt% passing
4.75 millimeters	0 - 4 wt% passing
Permeability	0.1 cm/sec, minimum

Reference: Sieve size is from WSDOT M41-10-88, Section 9.03.1(3)C for Grading No. 5 (WSDOT 1988). Permeability requirement is from WAC 173-303-650(2)(j) for new surface impoundments.

APPENDIX 4B

DETAILED DRAWINGS FOR THE 200 AREA EFFLUENT TREATMENT FACILITY CONTAINER STORAGE AREA AND TANK SYSTEMS

Drawings of the secondary containment systems for the ETF containers, and tanks and process units, and for the Load-In Tanks are summarized in Table 4B-1. Because the failure of the secondary containment systems could lead to the release of dangerous waste into the environment, Engineering Change Notices (ECNs) which affect the secondary containment systems will be submitted to the Washington State Department of Ecology, as a Class 1, 2, or 3 permit modification, as required by WAC 173-303-830.

Table 4B-1. Drawing of Effluent Treatment Facility and Load-In Station Secondary Containment Systems

ETF Process Unit	Drawing Number	Outstanding ECNs	Drawing Title
Surge Tank, Process/Container Storage Areas and Trenches - Foundation and Containment	H-2-89063, Sh 1, Rev. 3	ECN-647892	STRUCT - Foundation and Grade Beam Plan (Sheet 1)
Sump Tank Containment	H-2-89065, Sh 1, Rev. 3	None	STRUCT- Foundation, Sections and Detail (Sheet 1)
Verification Tank Foundation and Containment	H-2-89068, Sh 1, Rev. 3	ECN-647892	STRUCT - Verification Tank Foundation (Sheet 1)
Load-In Facility Foundation and Containment	H-2-817970, Sh 1, Rev. 1	ECN-641703 ECN-647247	Structural - ETF Truck Load-in Facility Plans and Sections (Sheet 1)
Load-In Facility Foundation and Containment	H-2-817970, Sh 2, Rev. 1	ECN-641703	Structural - ETF Truck Load-in Facility Sections and Details (Sheet 2)

P&ID - piping and instrumentation diagram.
STRUCT - architectural/structural diagram.

The drawings identified in Table 4B-2 provide an illustration of the piping and instrumentation configuration for the major process units and tanks at the ETF, and the Load-In Tanks. Drawings of the transfer piping systems between the LERF and ETF, and between the Load-In Station and the ETF also are presented in this table. These drawings are provided for general information and to demonstrate the adequacy of the design of the tank systems. An update to these drawings and drawings identified in Table 4B-1 will be provided annually to the Washington State Department of Ecology.

Table 4B-2. Drawings of Major Process Units and Tanks at the Effluent Treatment Facility and Load-In Station.

ETF Process Unit	Drawing Number	Outstanding ECNs	Drawing Title
Load-In Facility	H-2-817974, Sh 1, Rev. 9	ECN-647201L ECN-642820L ECN-647247 ECN-649112 ECN-649116	P&ID - ETF Truck Load-In Facility (Sheet 1)
Surge Tank	H-2-89337, Sh 1, Rev. 10	ECN-649101	P&ID - Surge Tank System (Sheet 1)
UV/Oxidation	H-2-88976, Sh 1, Rev. 6	ECN-646667L ECN-647245	P&ID - UV Oxidizer Part 1 (Sheet 1)
UV/Oxidation	H-2-89342, Sh 1, Rev. 6	ECN-647245	P&ID - UV Oxidizer Part 2 (Sheet 1)
Reverse Osmosis	H-2-88980, Sh 1, Rev. 8	None	P&ID - 1st RO Stage (Sheet 1)
Reverse Osmosis	H-2-88982, Sh 1, Rev. 10	None	P&ID - 2nd RO Stage (Sheet 1)
IX/Polishers	H-2-88983, Sh 1, Rev. 8	ECN-642800	P&ID – Polisher (Sheet 1)
Verification Tanks	H-2-88985, Sh 1, Rev. 8	None	P&ID - Verification Tank System (Sheet 1)
ETF Evaporator	H-2-89335, Sh 1, Rev. 11	ECN-646658L ECN-641719	P&ID - Evaporator (Sheet 1)
Thin Film Dryer	H-2-88989, Sh 1, Rev. 13	ECN-648765 ECN-646670 ECN-646672 ECN-642797	P&ID - Thin Film Dryer (Sheet 1)
Transfer Piping from LERF to ETF	H-2-88768, Sh 1, Rev. 1	None	Piping Plan/Profile 4"-60M-002-M17 and 3"-60M-001-M17 (Sheet 1)
Transfer Piping from Load-In Facility to ETF	H-2-817969, Sh 1, Rev. 1	W291-015 ECN-641703	Civil - ETF Truck Load-In Facility Site Plan (Sheet 1)

P&ID - piping and instrumentation diagram.
STRUCT - architectural/structural diagram.

This page intentionally left blank.

Hanford Facility RCRA Permit Modifications

Part III, Chapter 4 and Attachment 34
Liquid Effluent Retention Facility and 200 Area Effluent Treatment Facility

Outstanding ECNs

Index

Table 4B-1.
Drawing of Effluent Treatment Facility and Load-In Station Secondary Containment Systems

ETF Process Unit	Drawing Number	Outstanding ECNs
Surge Tank, Process/Container Storage Areas and Trenches - Foundation and Containment	H-2-89063, Sh 1, Rev. 3	ECN-647892
Sump Tank Containment	H-2-89065, Sh 1, Rev. 3	None
Verification Tank Foundation and Containment	H-2-89068, Sh 1, Rev. 3	ECN-647892
Load-In Facility Foundation and Containment	H-2-817970, Sh 1, Rev. 1	ECN-641703 ECN-647247
Load-In Facility Foundation and Containment	H-2-817970, Sh 2, Rev. 1	ECN-641703

ENGINEERING CHANGE NOTICE

Page 1 of 27

1. ECN 647892

Proj. ECN

2. ECN Category (mark one)	3. Originator's Name, Organization, MSIN, and Telephone No.	4. USQ Required?	5. Date
Supplemental [X] Direct Revision [] Change ECN [] Temporary [] Standby [] Supersedure [] Cancel/Void []	AF Crane, 32230, S6-72, 372-3152	[] Yes [X] No	09/21/98
	6. Project Title/No./Work Order No. Access Stairs/A4055	7. Bldg./Sys./Fac. No. 2025E	8. Approval Designator N/A
	9. Document Numbers Changed by this ECN (includes sheet no. and rev.) See Blk. 13a	10. Related ECN No(s). N/A	11. Related PO No. N/A

12a. Modification Work	12b. Work Package No.	12c. Modification Work Complete	12d. Restored to Original Condition (Temp. or Standby ECN only)
[X] Yes (fill out Blk. 12b) [] No (NA Blks. 12b, 12c, 12d)	EL-98-00588/M ARC 9/23/98	Design Authority/Cog. Engineer Signature & Date	N/A Design Authority/Cog. Engineer Signature & Date

13a. Description of Change

H-2-89033, Sh 1, Rev 2
H-2-89036, Sh 1, Rev 2
H-2-89039, Sh 1, Rev 4
H-2-89040, Sh 1, Rev 2
H-2-89044, Sh 1, Rev 4

13b. Design Baseline Document? [X] Yes [] No

H-2-89063, Sh 1, Rev 3
H-2-89068, Sh 1, Rev 3
H-2-89069, Sh 1, Rev 3
H-2-89078, Sh 1, Rev 4

See Continuation Sheet

14a. Justification (mark one)

Criteria Change	[]	Design Improvement	[X]	Environmental	[]	Facility Deactivation	[]
As-Found	[]	Facilitate Const	[]	Const. Error/Omission	[]	Design Error/Omission	[]

14b. Justification Details

Installation of stairways is required to provide safe access when carrying equipment into the surge and verification containments.

Informal design review performed by RJ Huth.

15. Distribution (include name, MSIN, and no. of copies)

MW Bowman	S6-72	(1)	RJ Huth	S6-72	(1)
AF Crane	S6-72	(1)*	JM Isdell	G3-17	(1)*
BS Darling	T4-61	(1)	NJ Sullivan	S6-72	(1)
DL Flyckt	S6-71	(1)	AK Yoakum	S6-71	(1)
JE Geary	S6-71	(1)	WCC Planning	S6-71	(1)*

*Advance Copy

RELEASE STAMP

SEP 23 1998

DATE: HANFORD RELEASE ID:

STA: 30 25

A-7900-013-2 (05/96) GEF095

ENGINEERING CHANGE NOTICE	Page 2 of 27	1. ECN (use no. from pg. 1) 647892

16. Design Verification Required	17. Cost Impact				18. Schedule Impact (days)	
	ENGINEERING		CONSTRUCTION			
[X] Yes	Additional	[] $	Additional	[] $	Improvement	[]
[] No	Savings	[] $	Savings	[] $	Delay	[]

19. Change Impact Review: Indicate the related documents (other than the engineering documents identified on Side 1) that will be affected by the change described in Block 13. Enter the affected document number in Block 20.

SDD/DD	[]	Seismic/Stress Analysis	[]	Tank Calibration Manual	[]
Functional Design Criteria	[]	Stress/Design Report	[]	Health Physics Procedure	[]
Operating Specification	[]	Interface Control Drawing	[]	Spares Multiple Unit Listing	[]
Criticality Specification	[]	Calibration Procedure	[]	Test Procedures/Specification	[]
Conceptual Design Report	[]	Installation Procedure	[]	Component Index	[]
Equipment Spec.	[]	Maintenance Procedure	[]	ASME Coded Item	[]
Const. Spec.	[]	Engineering Procedure	[]	Human Factor Consideration	[]
Procurement Spec.	[]	Operating Instruction	[]	Computer Software	[]
Vendor Information	[]	Operating Procedure	[]	Electric Circuit Schedule	[]
OM Manual	[]	Operational Safety Requirement	[]	ICRS Procedure	[]
FSAR/SAR	[]	IEFD Drawing	[]	Process Control Manual/Plan	[]
Safety Equipment List	[]	Cell Arrangement Drawing	[]	Process Flow Chart	[]
Radiation Work Permit	[]	Essential Material Specification	[]	Purchase Requisition	[]
Environmental Impact Statement	[]	Fac. Proc. Samp. Schedule	[]	Tickler File	[]
Environmental Report	[]	Inspection Plan	[]		[]
Environmental Permit	[]	Inventory Adjustment Request	[]		[]

20. Other Affected Documents: (NOTE: Documents listed below will not be revised by this ECN.) Signatures below indicate that the signing organization has been notified of other affected documents listed below.

Document Number/Revision	Document Number/Revision	Document Number Revision
N/A		

21. Approvals

	Signature	Date		Signature	Date
Design Authority	AF Crane AF Crane	9-21-98	Design Agent	AF Crane AF Crane	9-21-98
Cog. Eng.			PE		
Cog. Mgr.	NJ Sullivan NJ Sullivan	9-22-98	QA		
QA			Safety		
Safety			Design		
Environ.			Environ.		
Other			Other		
RJ Huth Informal Design Review	RJ Huth	9-22-98			
			DEPARTMENT OF ENERGY		
			Signature or a Control Number that tracks the Approval Signature		
			ADDITIONAL		

H-2-89033, Sh 1, Zone D-3: Replace ladder with stairway.

H-2-89036, Sh 1, Zone E-4: Replace ladder with stairway.

H-2-89039, Sh 1, Zone B-4: Replace ladder with stairway & show new sidewalk.

Zone E-4: Replace ladder with stairway.

H-2-89040, Sh 1, Zone B-4: Replace ladder with stairway & show new sidewalk.

Zone E-4: Replace ladder with stairway.

H-2-89044, Sh 1, Zone B-4: Replace ladder with stairway & show new sidewalk.

Zone E-4: Replace ladder with stairway.

H-2-89063, Sh 1, Zone F-2: Replace ladder with stairway. Delete 8'-9" dimension and ladder & crossover centerline callout. Change Section 4, Dwg. 89069 callout to read "See Section For Foundation Information".

H-2-89068, Sh 1, Zone C-3: Replace ladder with stairway. Delete 10'-0" & 3'-5 1/2" dimensions, landing and ladder & crossover centerline callout. Change callout to read "See Section For Foundation Information" with reference to Dwg. 89069, Section 4.

H-2-89069, Sh 1, Zone A-6: Add "minimum" to foundation width dimension (2'-0") callout. Change foundation text to read "Ladder Or Stairway Concrete Foundation (Locate In Field)". Change ladder description text to read "Aluminum Pre-Engineered Ship Ladder With Platform & Return, O'Keefe's Model 522-10 Or Equal, Or Aluminum Pre-Engineered Stairway. See VI Supp. 50054 For Stairway Detail."

H-2-89078, Sh 1, Zone A-7: Change detail title to "Ladder Or Stairway Step Off Pad".

Zone B-6: Change callout to "Ladder Or Stairway" from "Ladder".

Zone B-7: Add "minimum" to step off pad length dimension (38").

Zone B-8: Add "minimum" to step off pad width dimension (30").

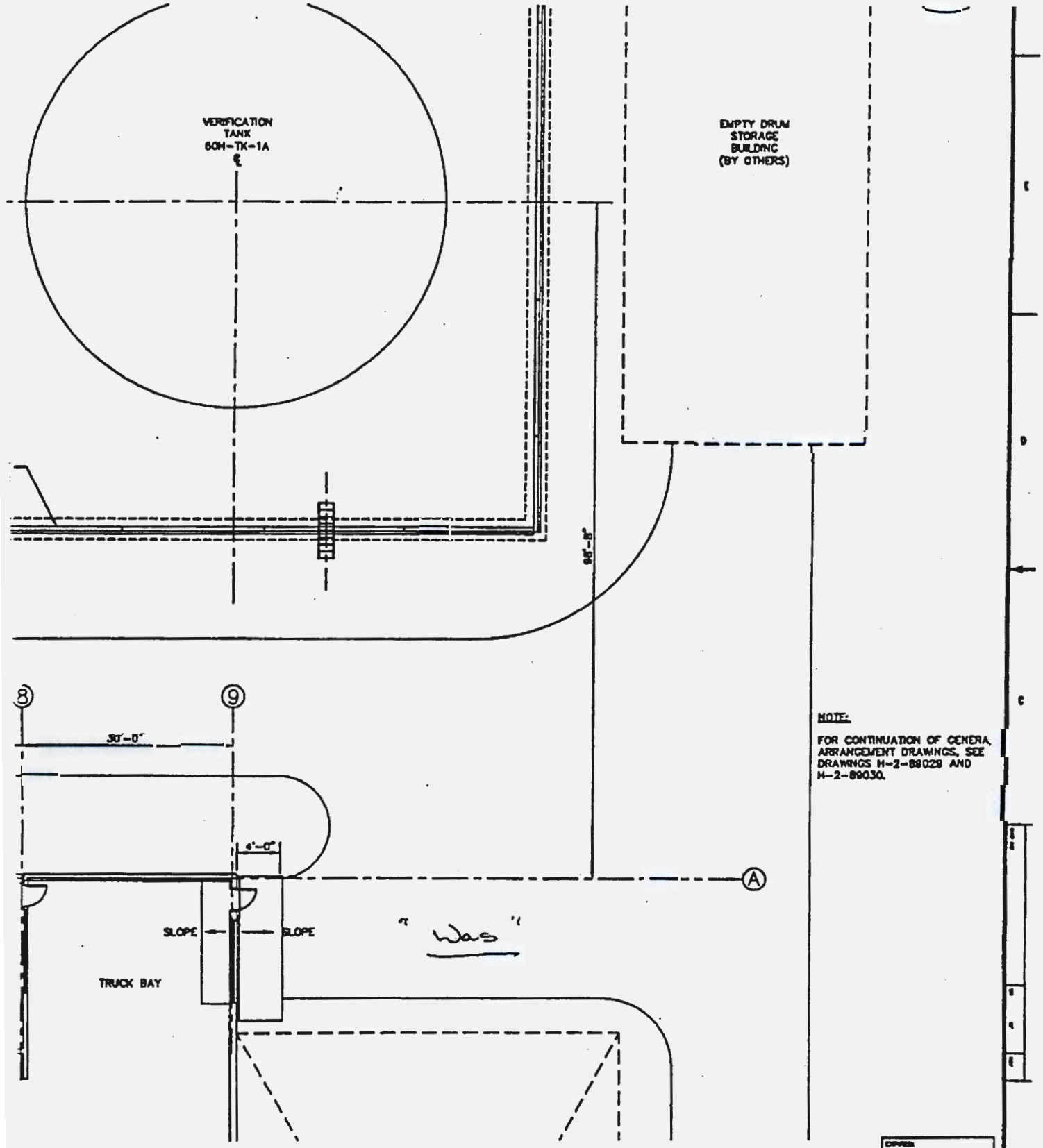

ECN 647892, Pg 4 of 27
H-2-89033, SH 1

3		AS BUILT PER ECN #1333	BV		
1		ISSUED FOR CONSTRUCTION			
0		ISSUED FOR FOOR SUBMITTAL			
REV	DATE	DESCRIPTION	DRAWN	CHKD	APPD

REVISIONS

U.S. DEPARTMENT OF ENERGY
RICHLAND FIELD OFFICE, RICHLAND
JCC CORPORATION

GENERAL ARRANGEMENT
NORTH YARD

SIZE	CODE NO.	CODE NO.	DWG NO.	REV
F	29236	6110	H-2-89033	2

SCALE 1/8"=1'-0" | D-127H-008 | SHEET 1 OF

NUMBER	TITLE	NUMBER	TITLE

DRAWING TRACEABILITY LIST — REFERENCES — NOT USED ON

CADFILE 80890.33A — CADCODE

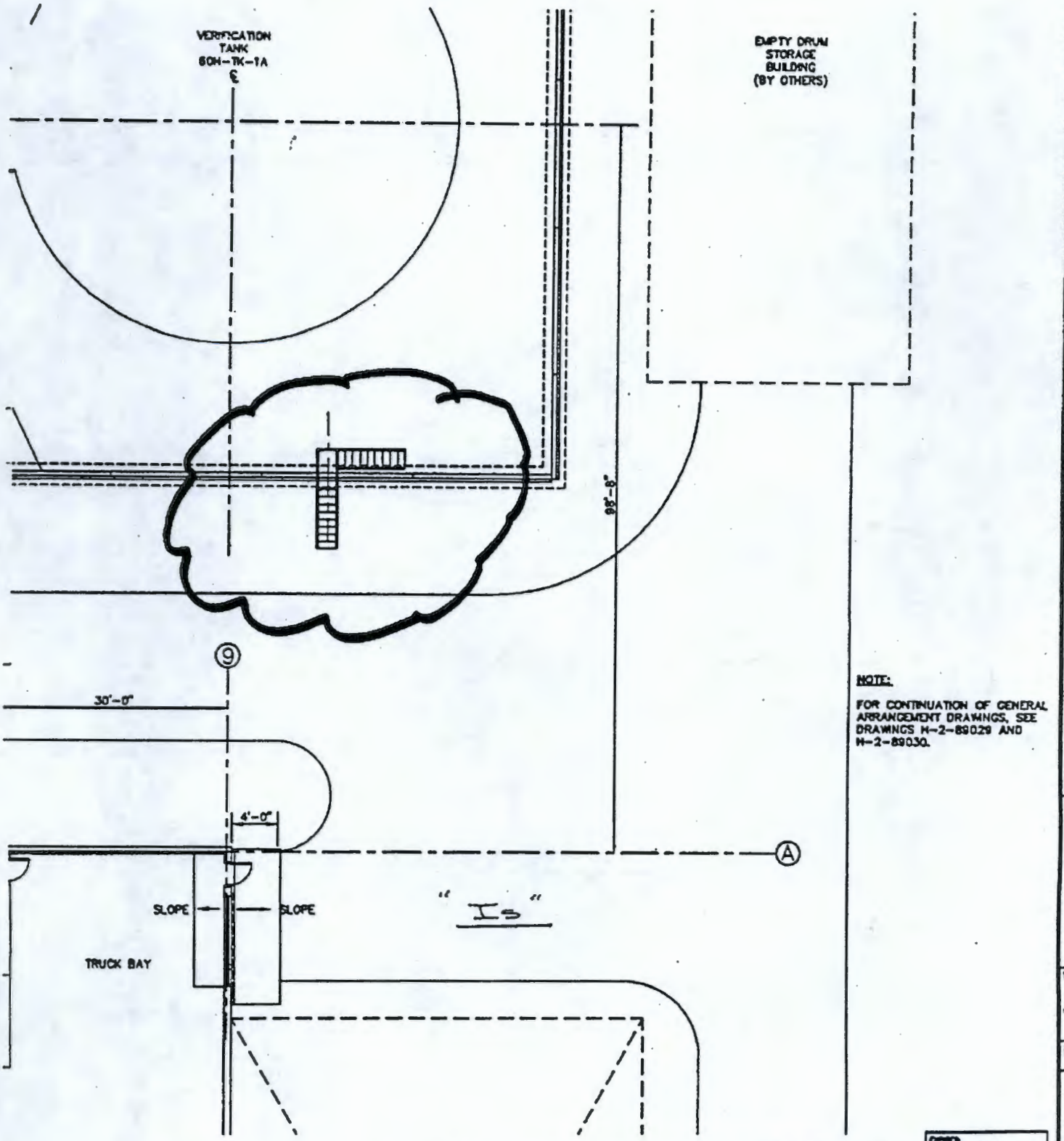

ECN 647892, pg 5 of 27
H-2-89033, SH 1

REV	DATE	DESCRIPTION	DRAWN	CHKD	APPD
2		AS BUILT PER ECN 611353	MY		
1		ISSUED FOR CONSTRUCTION		ECH	EFH
0		ISSUED FOR 100% SUBMITTAL		ECH	EFH

REVISIONS

CADFILE B089033A CADCODE

U.S. DEPARTMENT OF ENERGY
DOE FIELD OFFICE, RICHLAND
JOC CORPORATION

GENERAL ARRANGEMENT
NORTH YARD

SIZE F | SHEET 2 | SCALE 1/8"=1'-0" | D-122H-008 | SHEET 1 OF

NUMBER	TITLE
DRAWING TRACEABILITY LIST	

NUMBER	TITLE
REFERENCES	
NEXT USED ON	

ECN 647892, pg 6 of 27
H-2-89036, SH 1

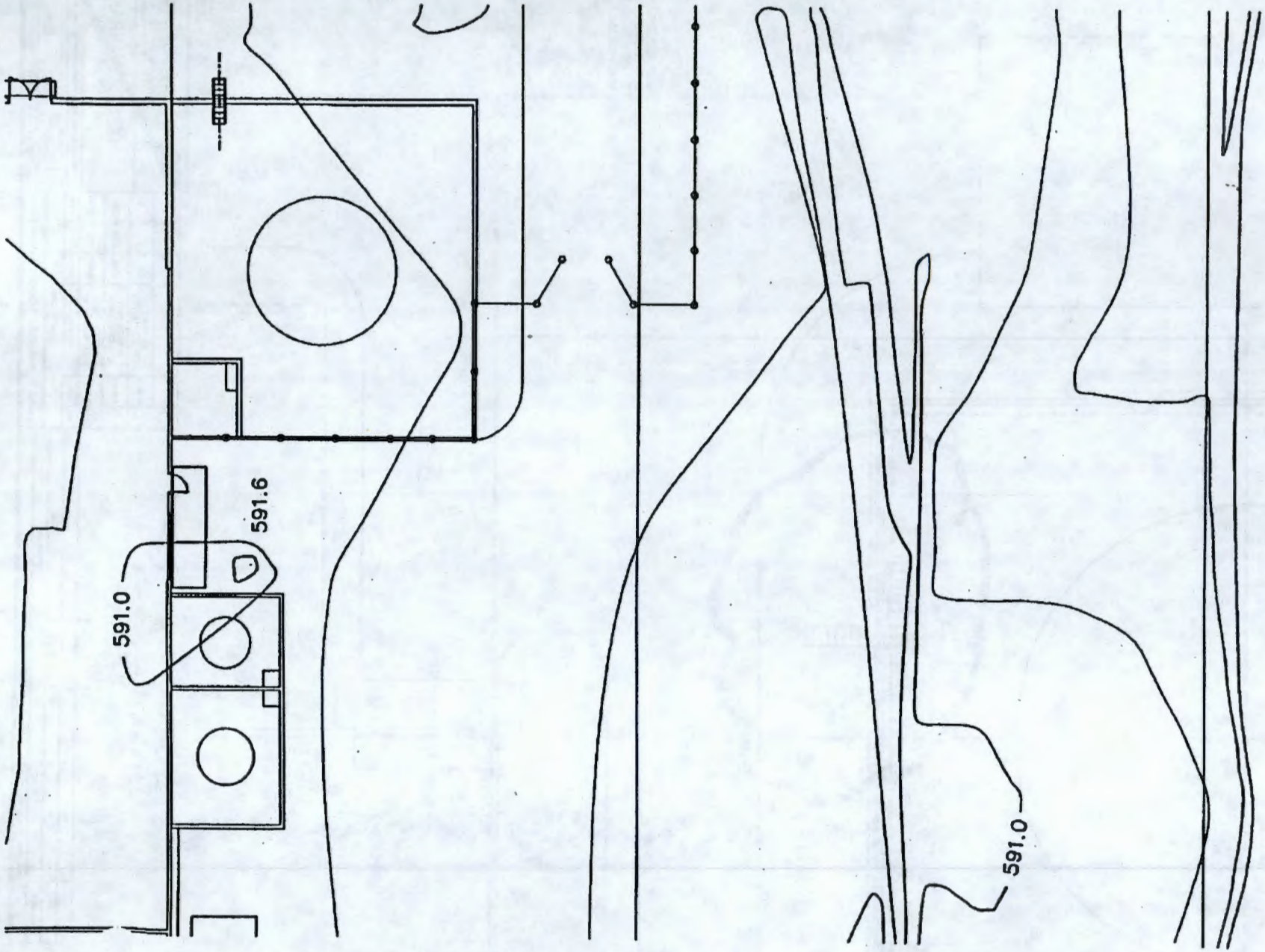

"Is"

ECN 647892, pg 7 of 27

H-2-89036, SH 1

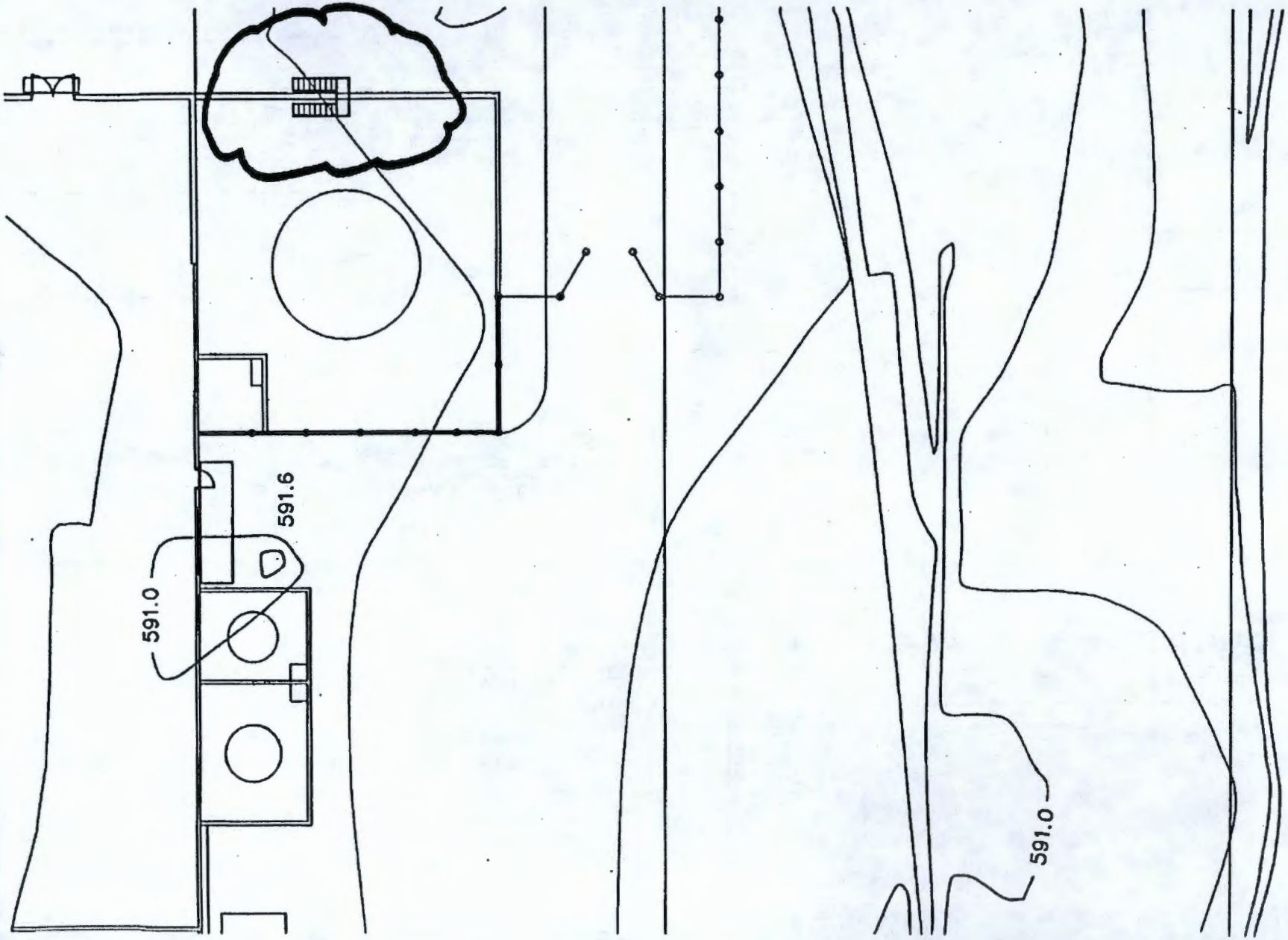

Was

ECN 647892, pg 8 of 27
H-2-89039, SH 1

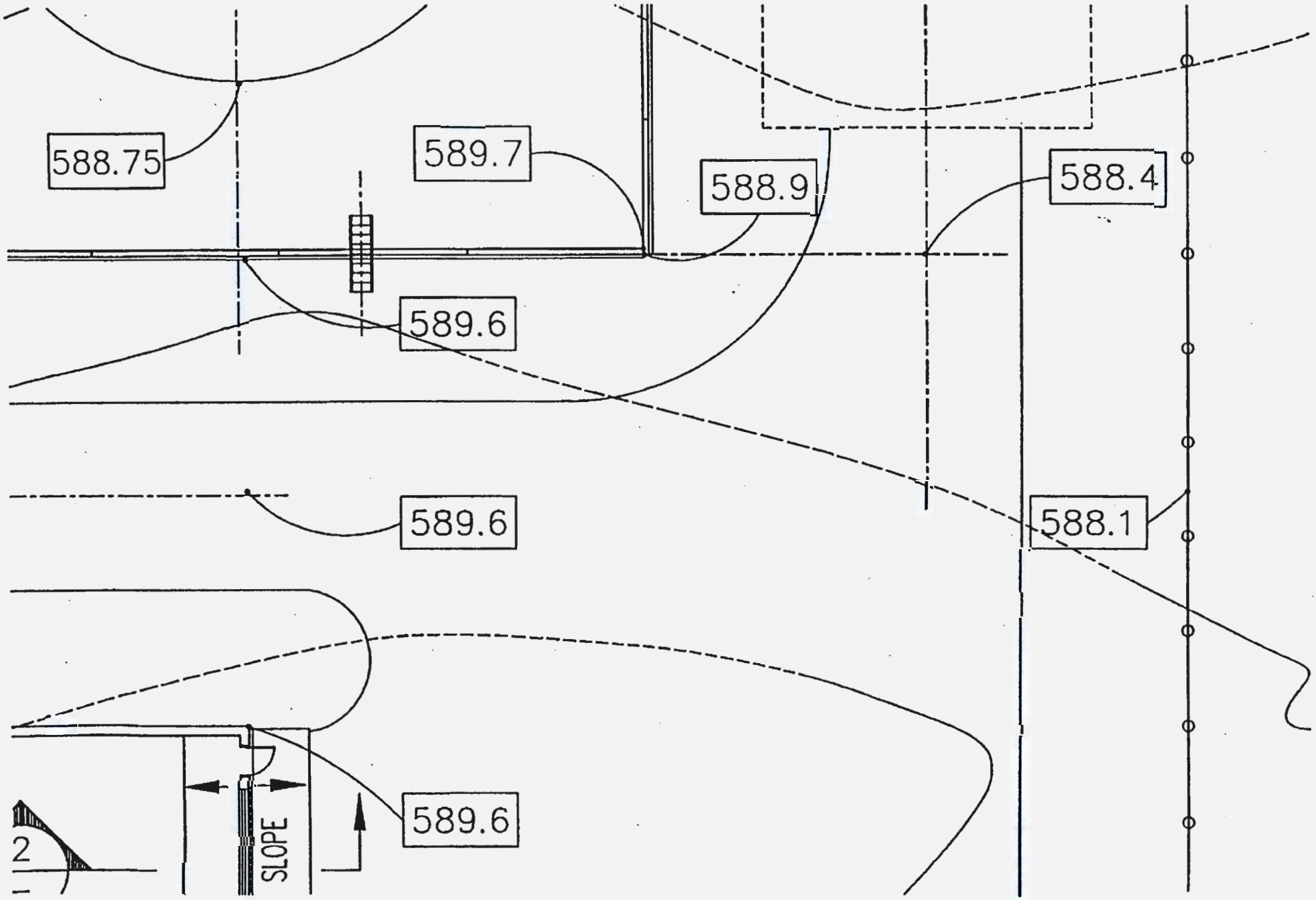

"I3"

ECN 647892, pg 9 of 27
H-2-89039, SH 1

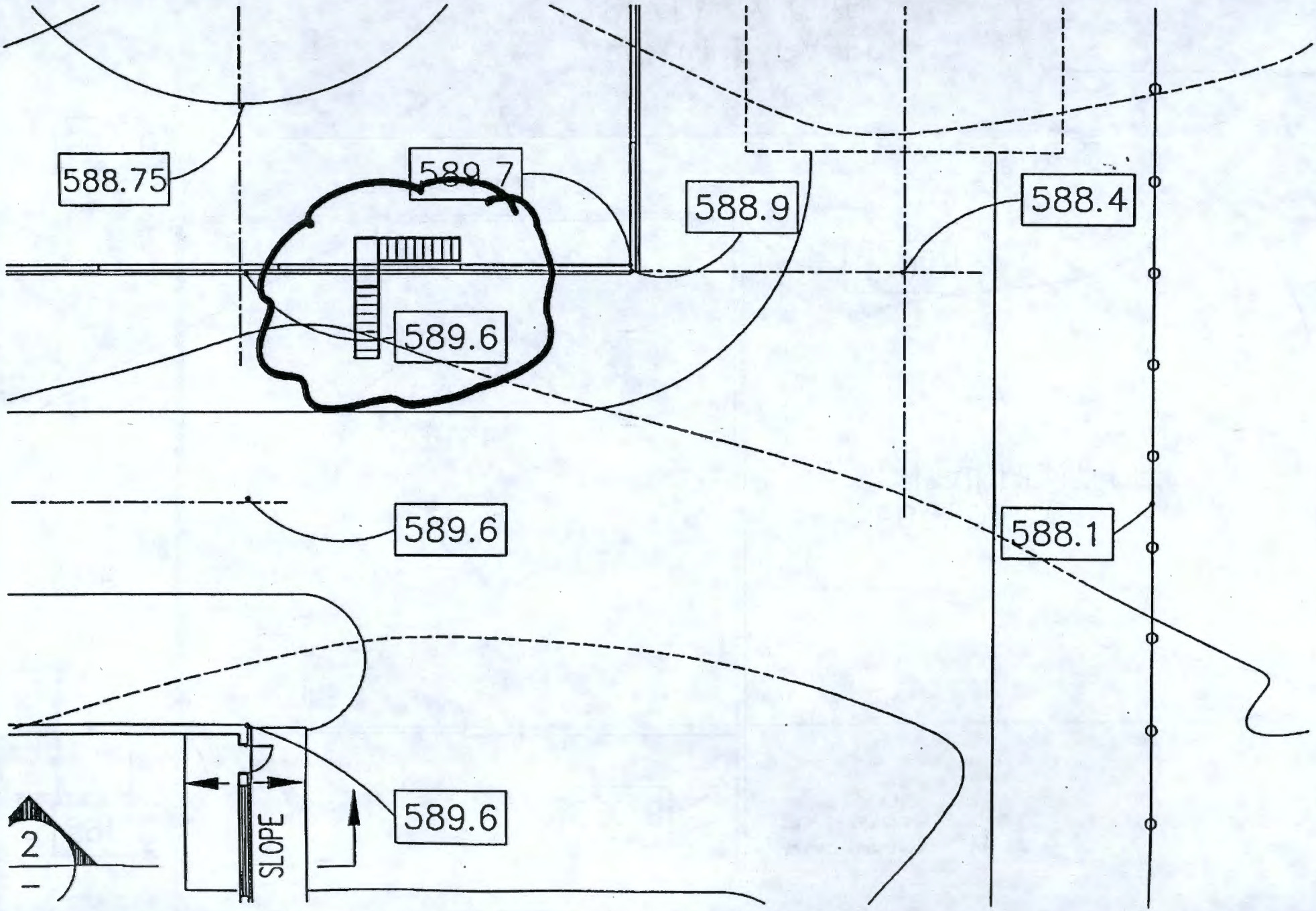

ECN 647892, pg 10 of 27
W-2-89039, SH 1

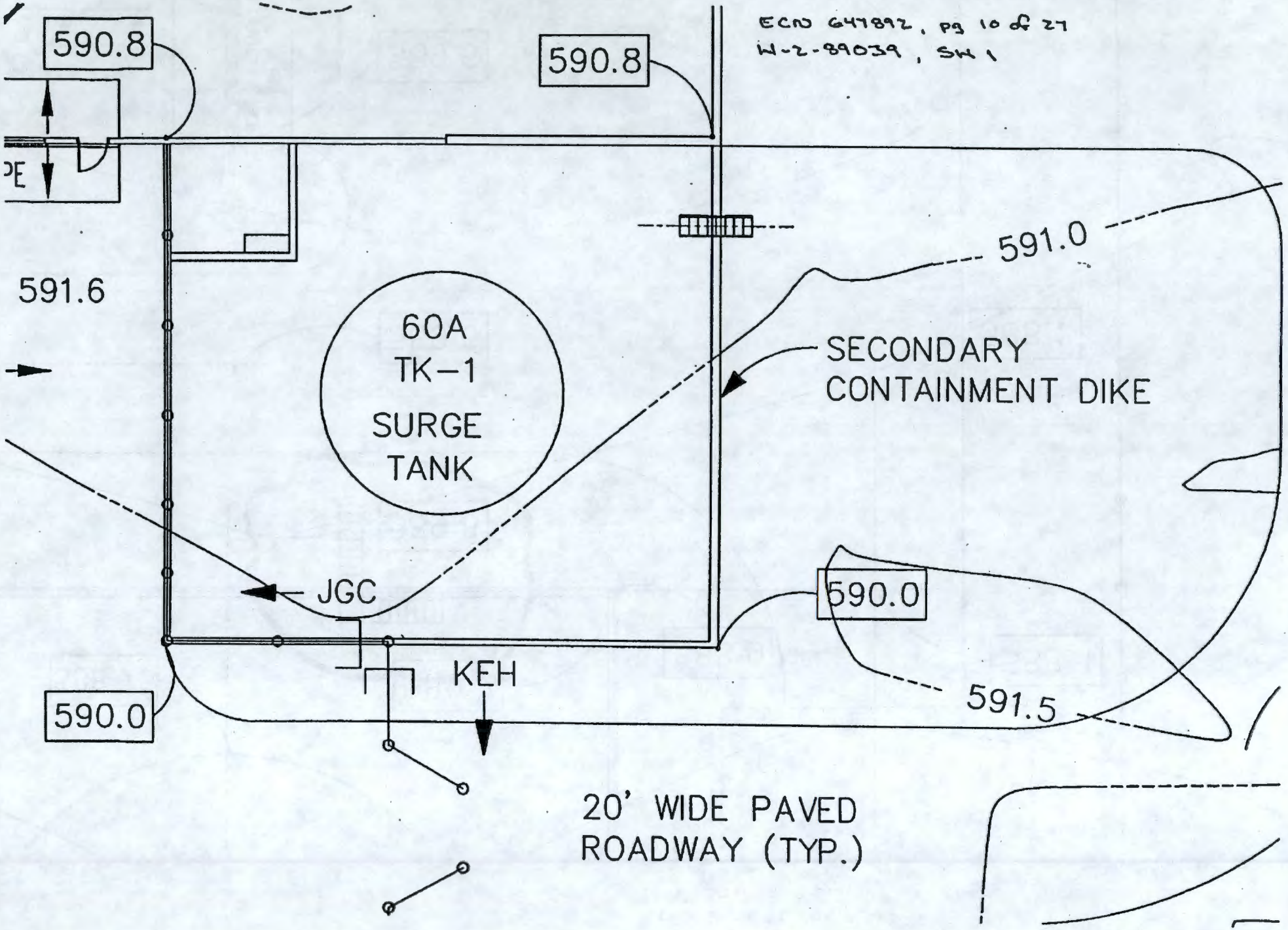

"I3"

ECN 647892, Pg 11 of 27
H-2-89039, SH 1

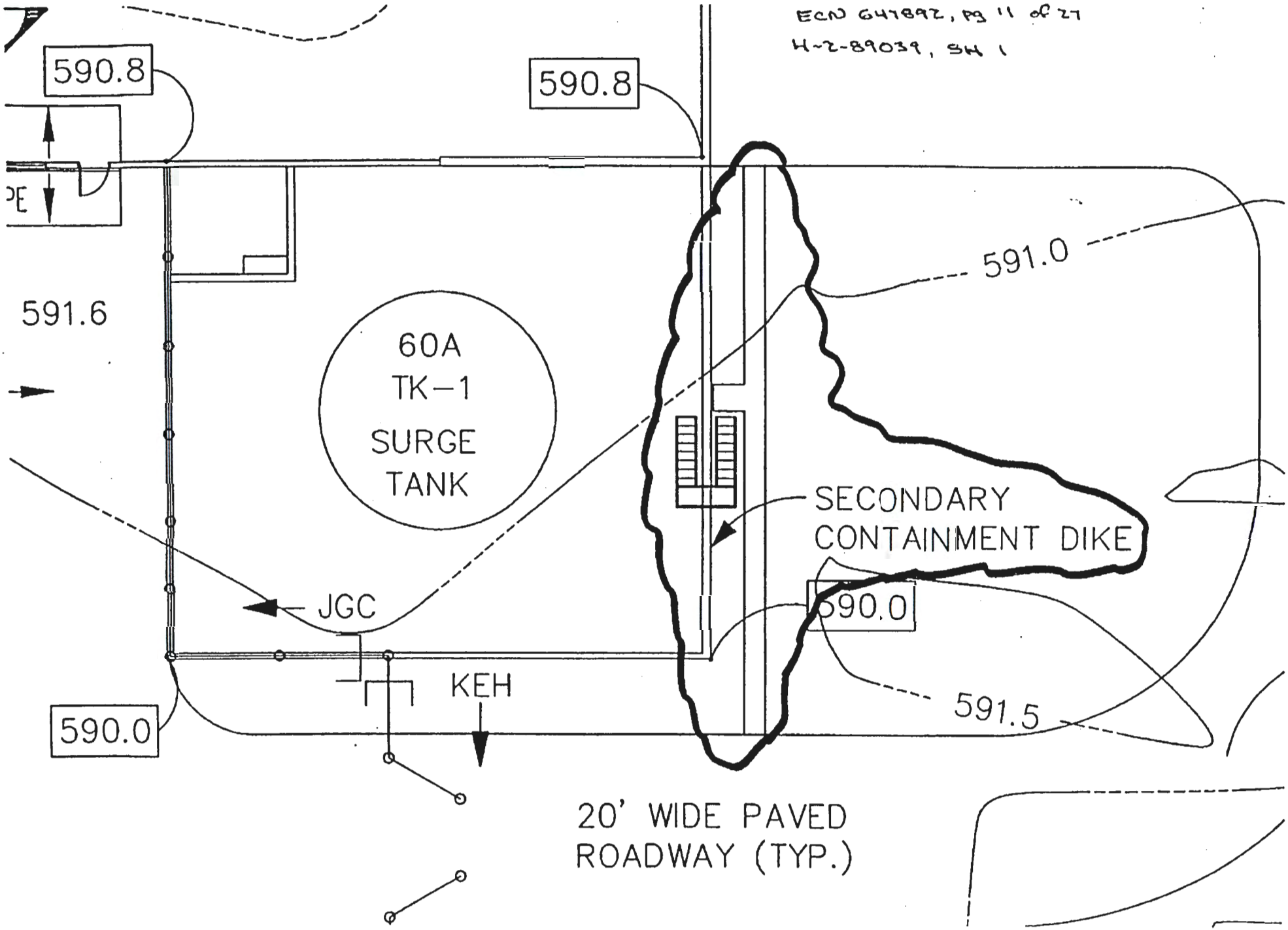

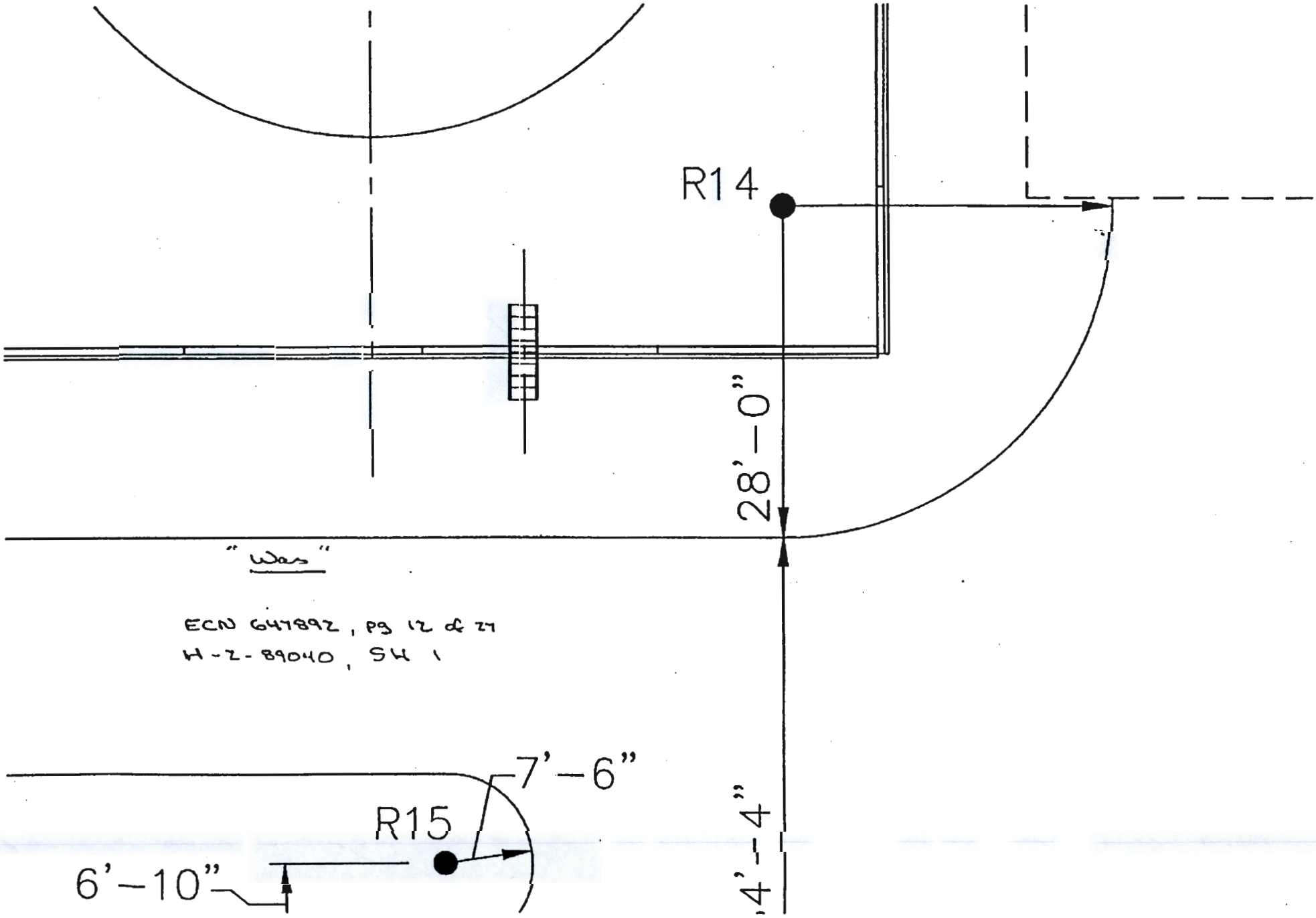
R14
28'-0"
"Was"
ECN 647892, pg 12 of 27
H-2-89040, SH 1
7'-6"
R15
6'-10"
4'-4"

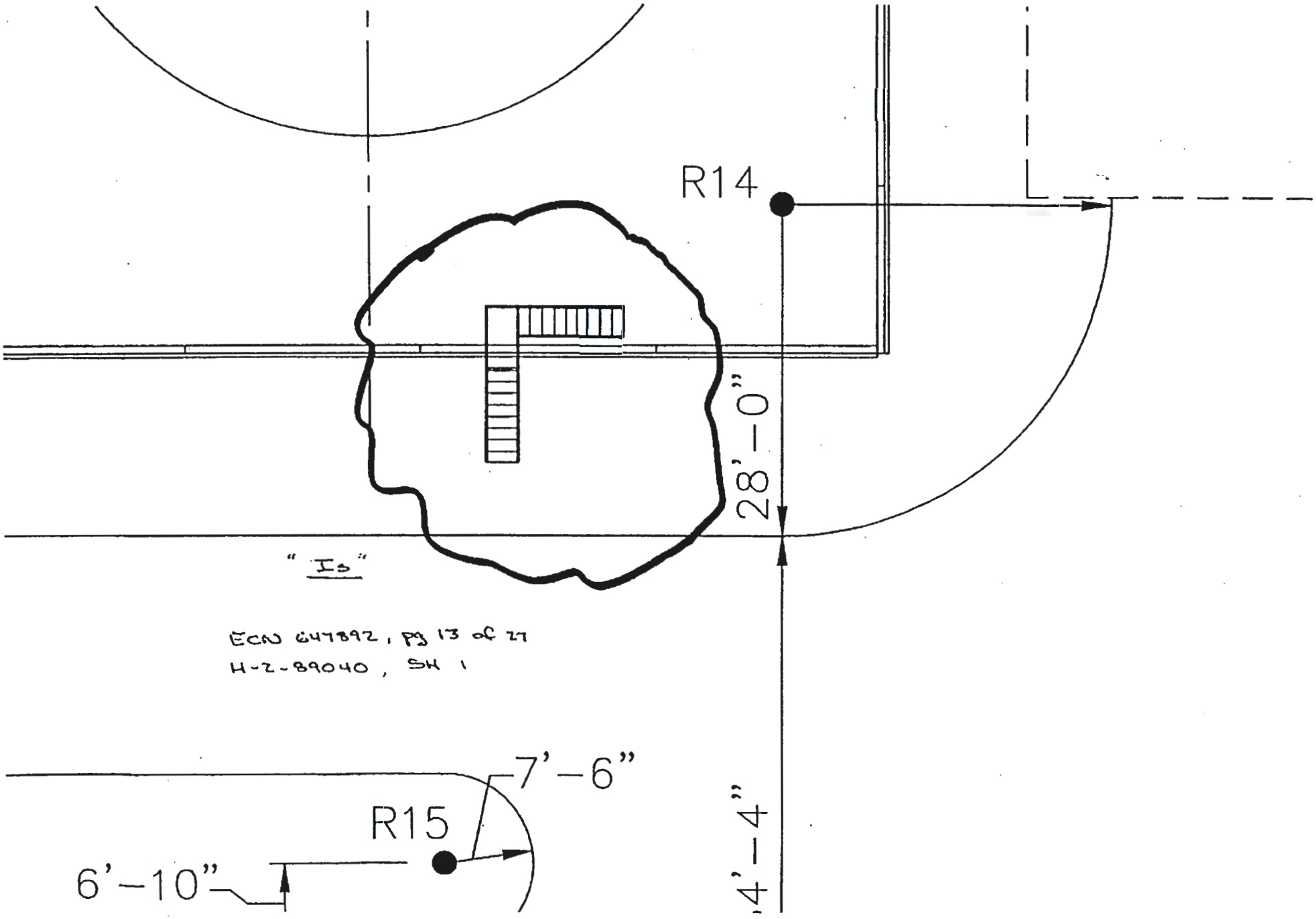
R14
28'-0"
"Is"
ECN 647892, pg 13 of 27
H-2-89040, SH 1
7'-6"
R15
6'-10"
4'-4"

Was

ECN 647892, pg 14 of 27
H-2-89040, SH 1

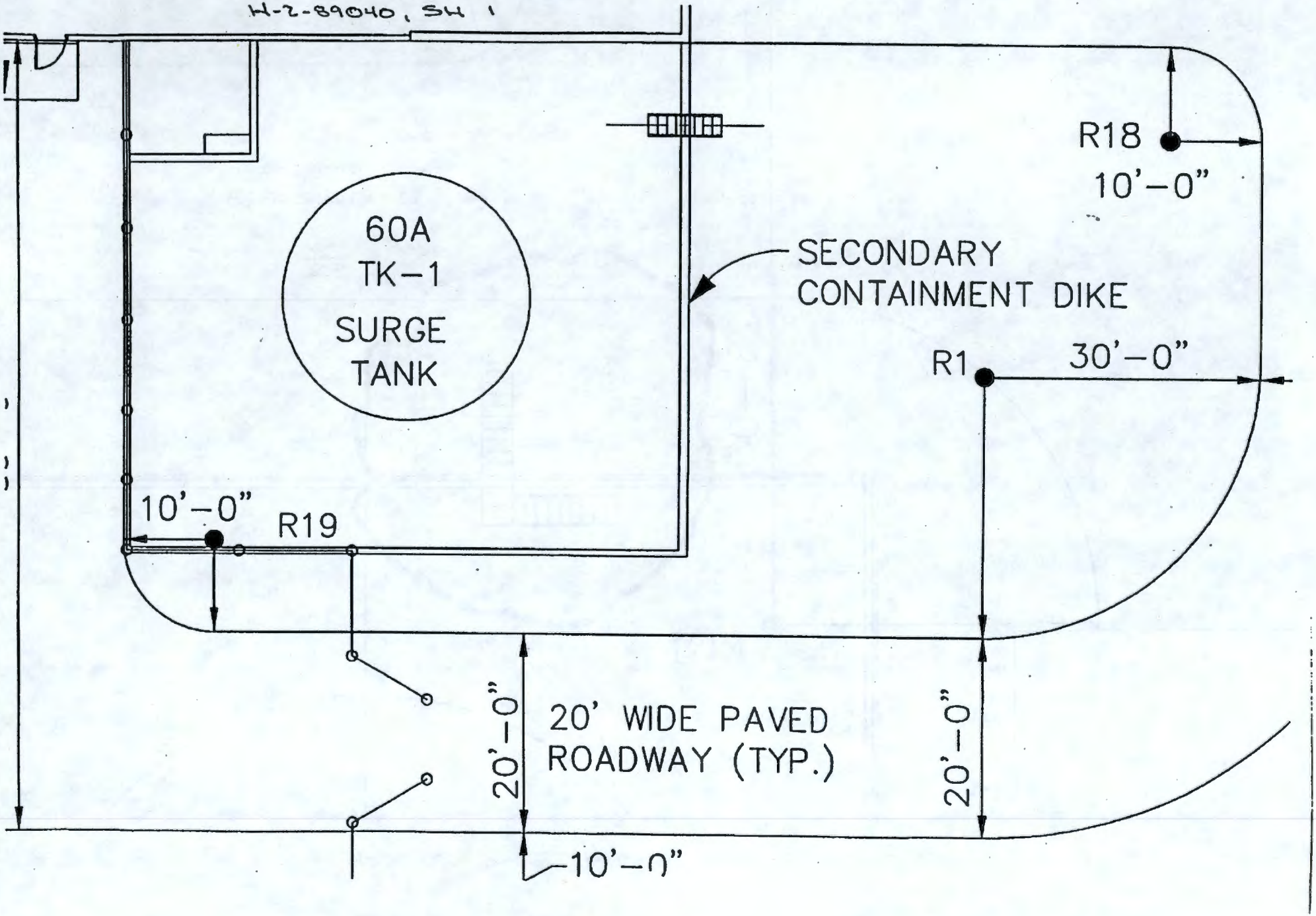

"Ib"

ECN 647892, pg 15 of 27
H-2-89040, SH 1

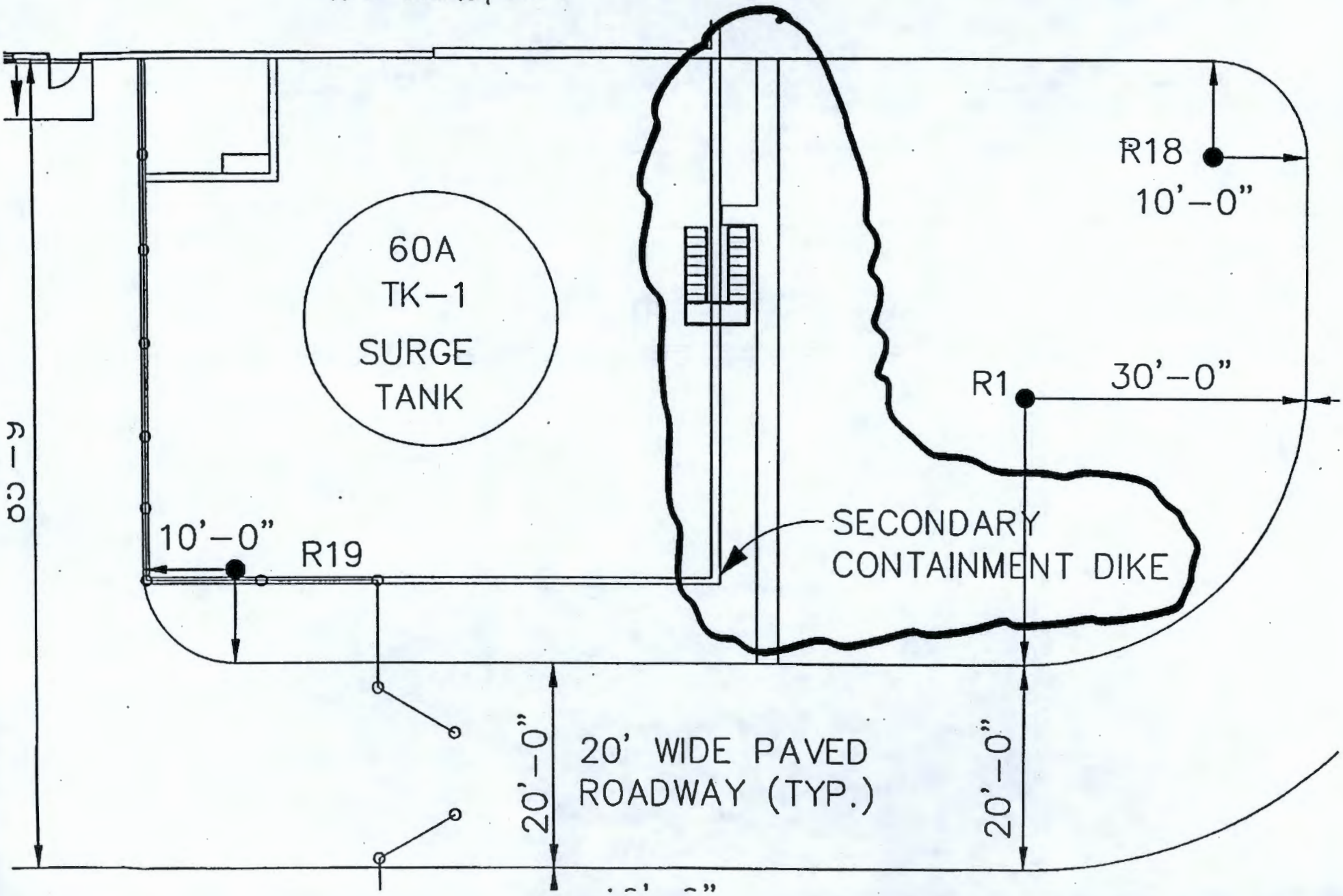

ECN 647892, Pg 16 of 27

H-2-89044, Sh 1

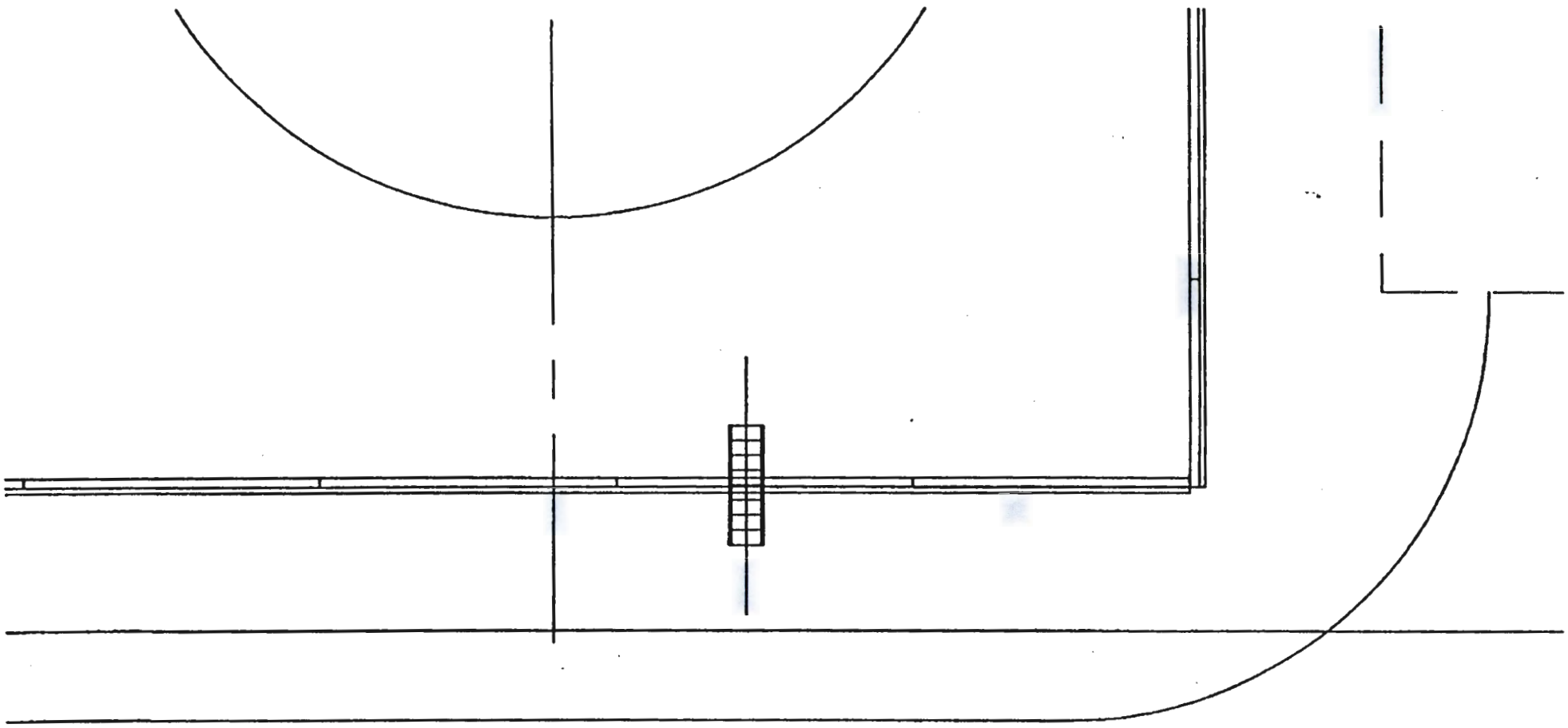

℄ PIPE (–)4'–6"
BELOW GRADE

" I3

ECN 647892, pg 17 of 27

H-2-89044, SH 1

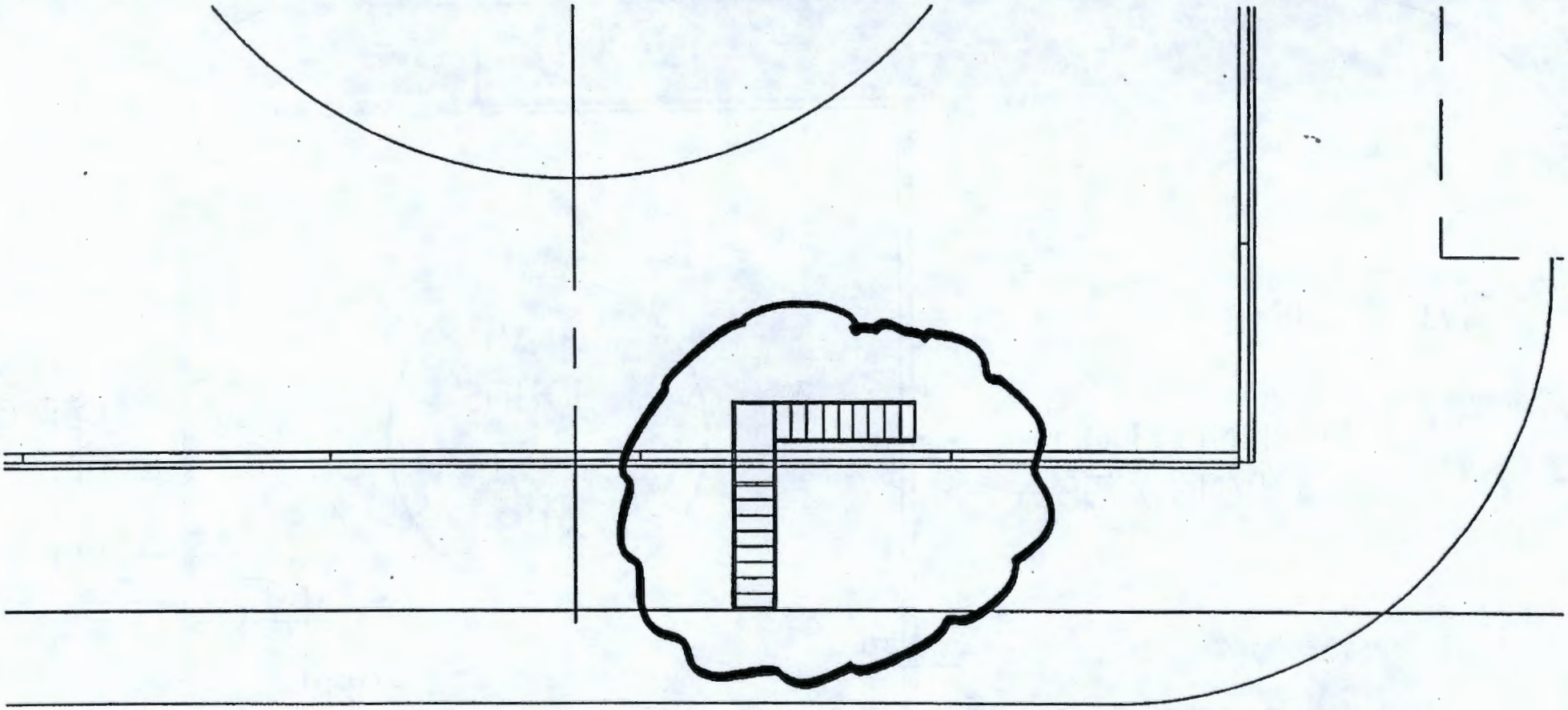

℄ PIPE (–)4'–6"
BELOW GRADE

"Was"

ECN 647892, pg 18 of 27
H-2-89044, SH 1

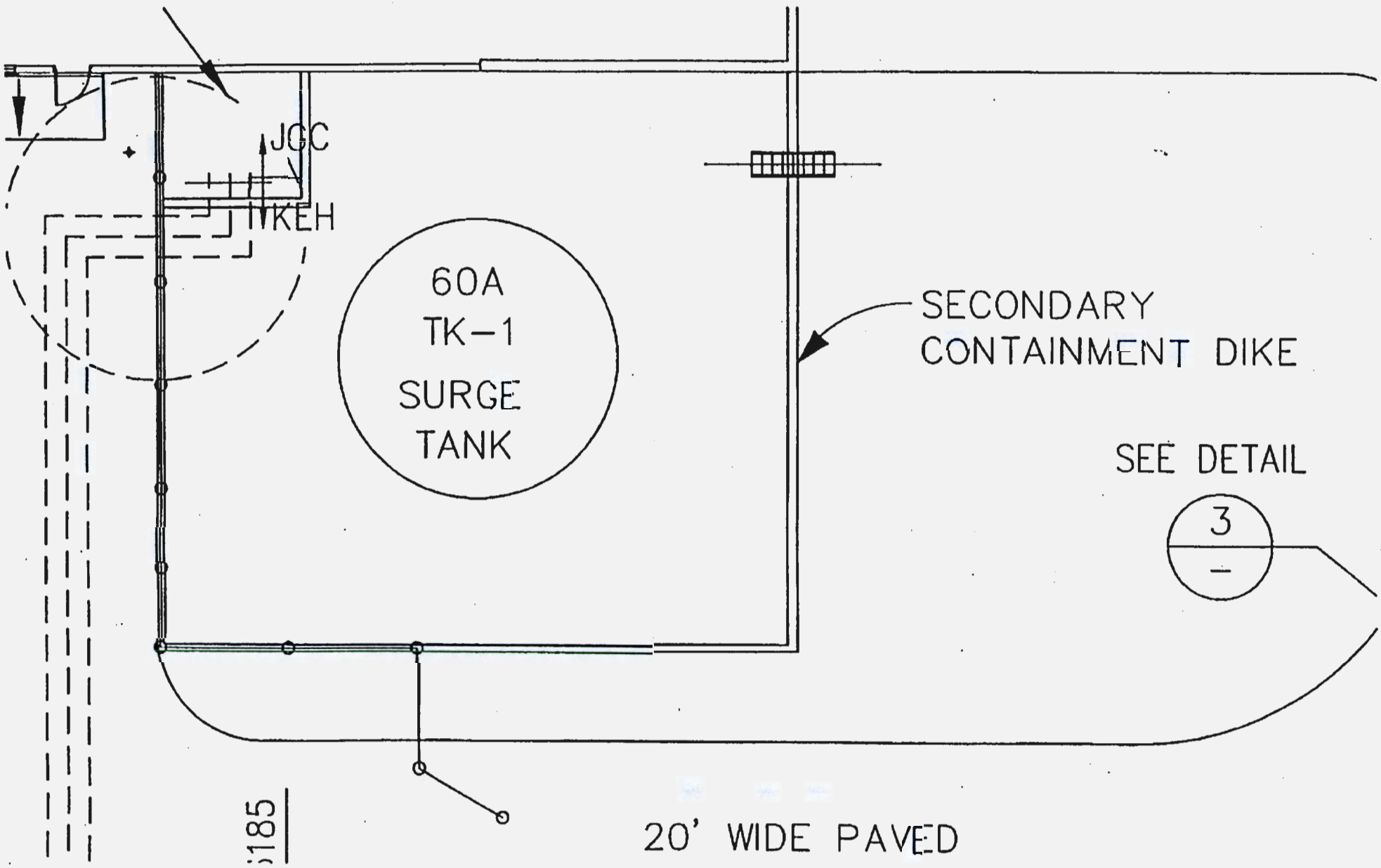

"I3"

ECN 647892, pg 19 of 27
H-2-99044, SH 1

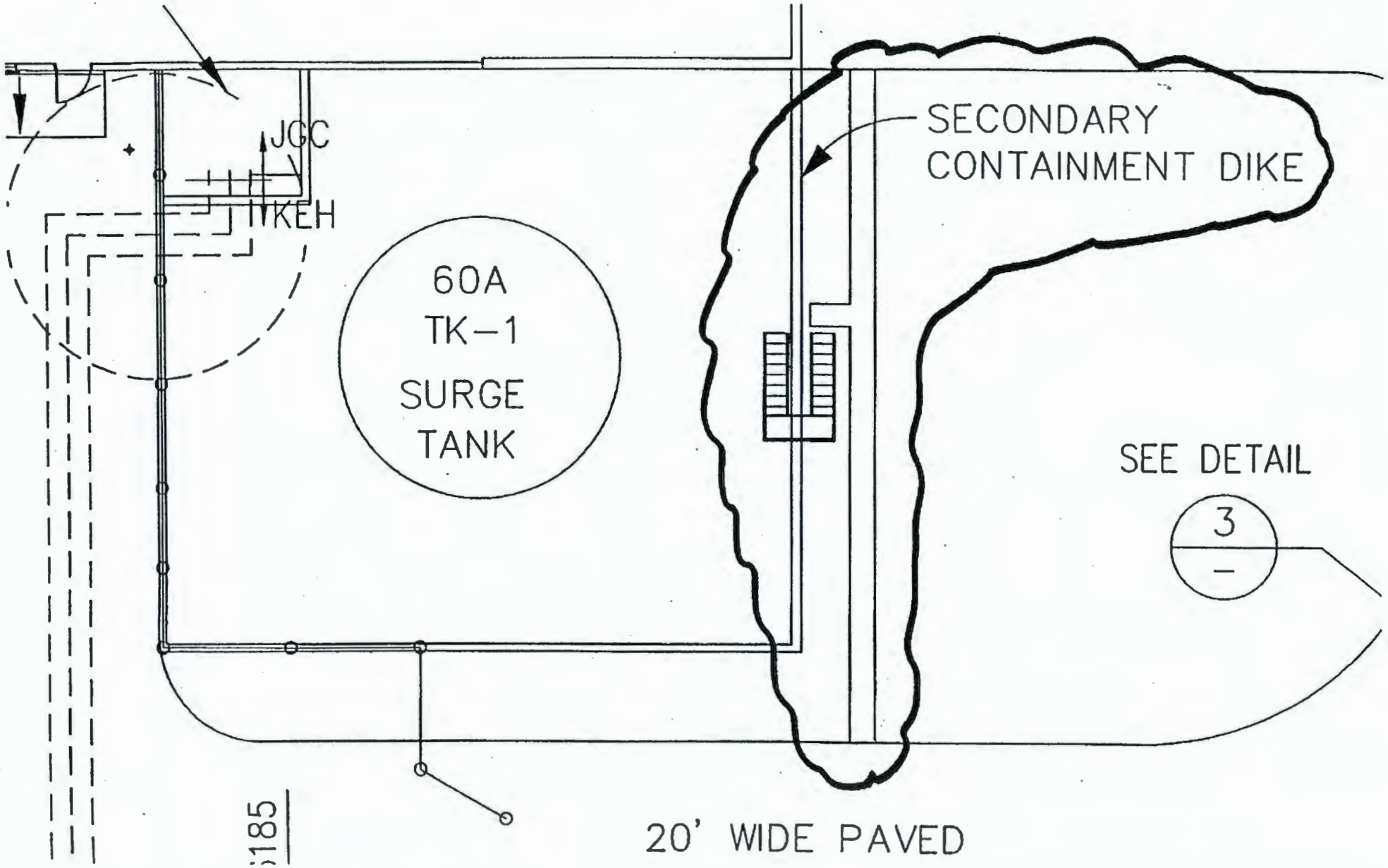

"Was"

ECN 647892, pg 20 of 27
H-2-89063, SH 1

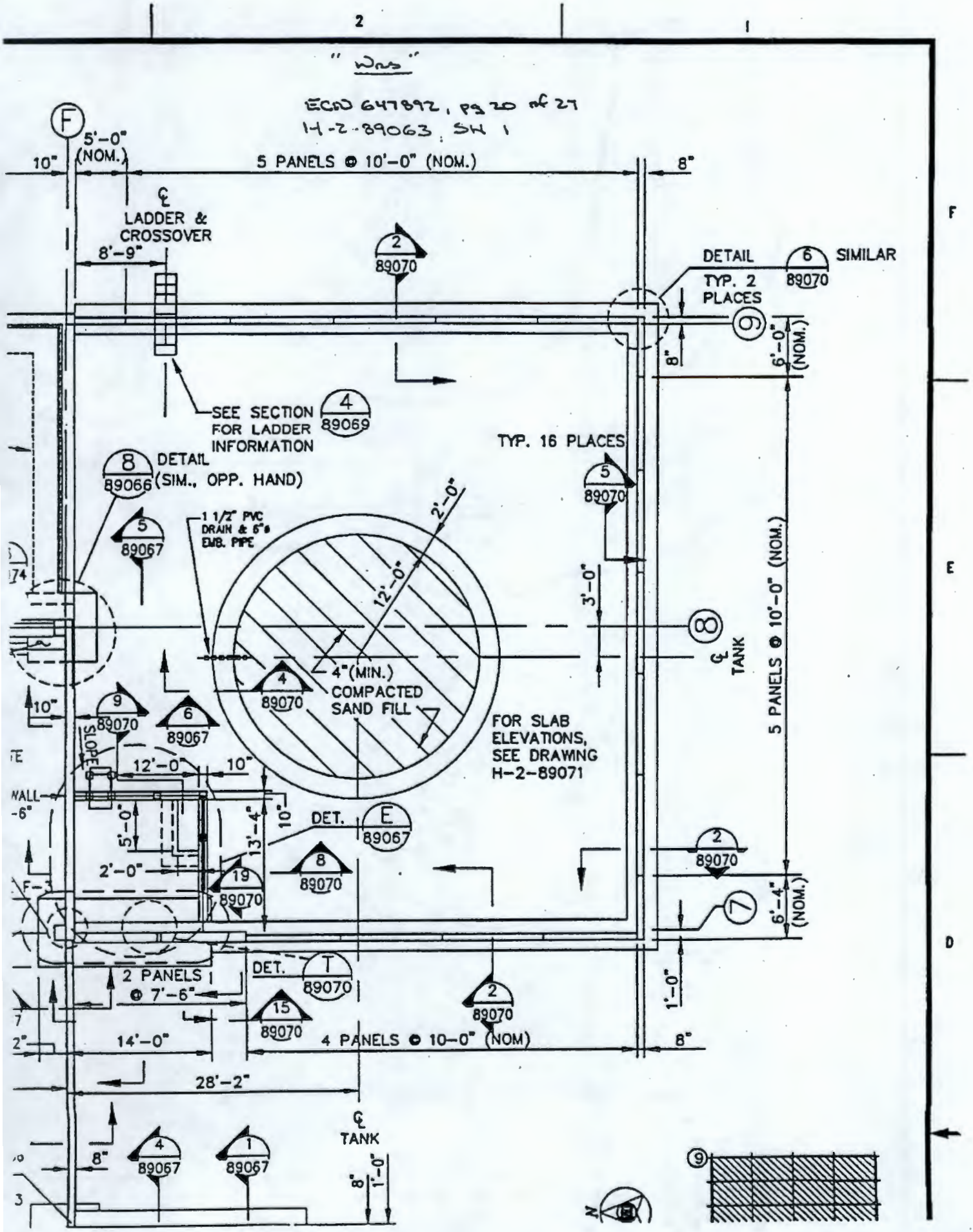

"Is"

ECN 647892, pg 21 of 27

H-2-89063, SH 1

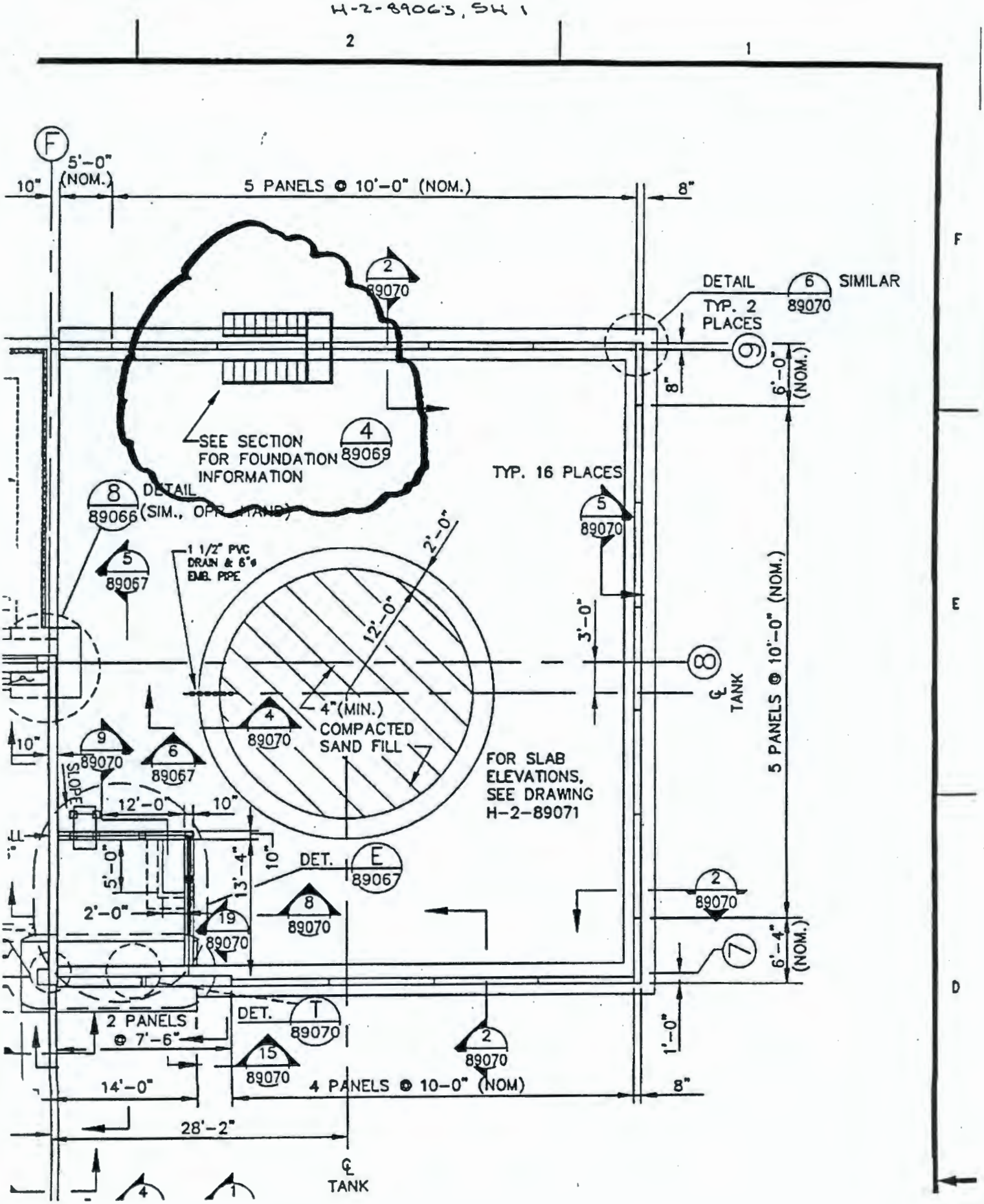

"Was"

ECN 647892, Pg 22 of 27

H-2-89068, SH 1

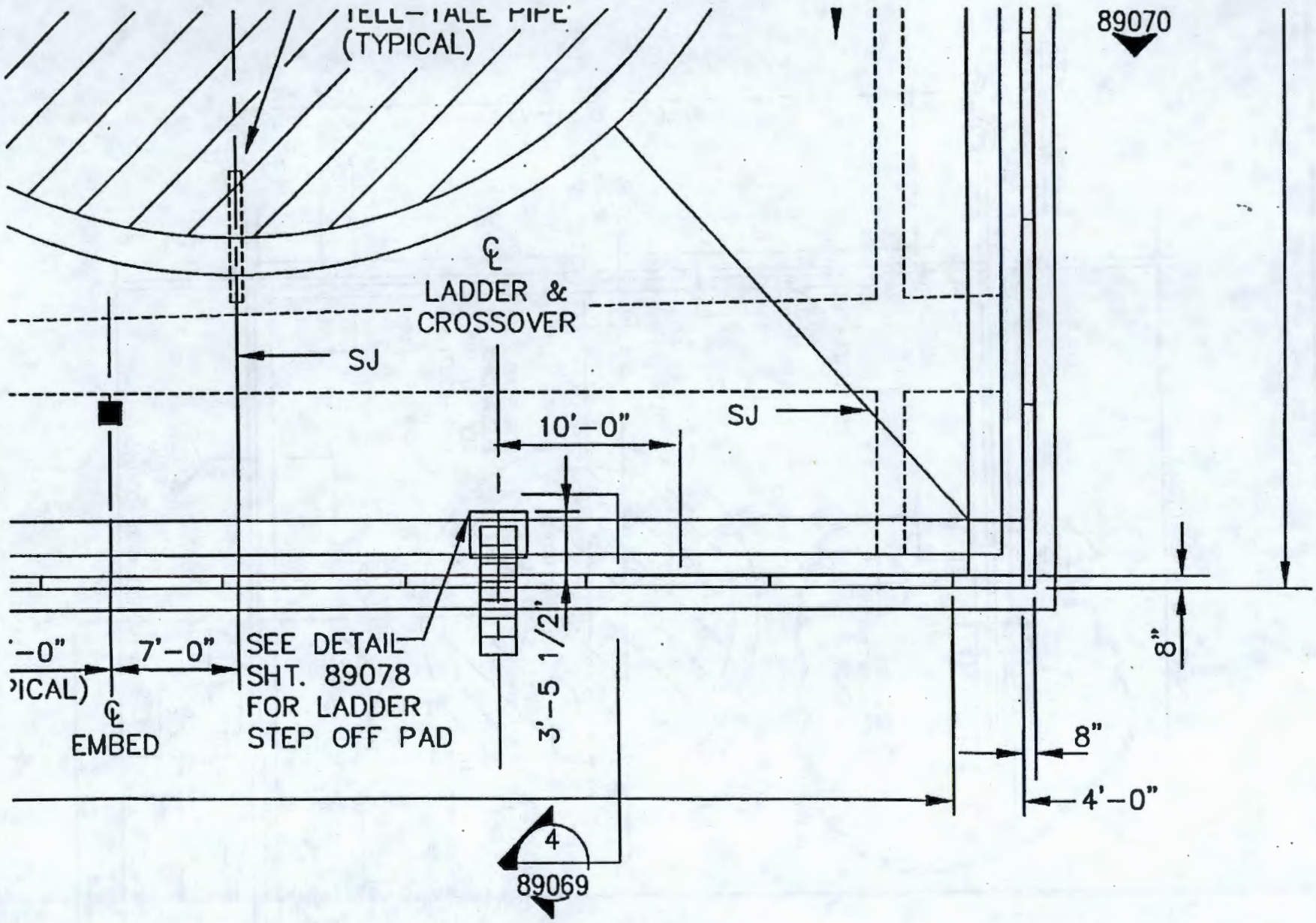

"Is"

ECN 647892, Pg 23 of 27
H-2-89068, SH 1

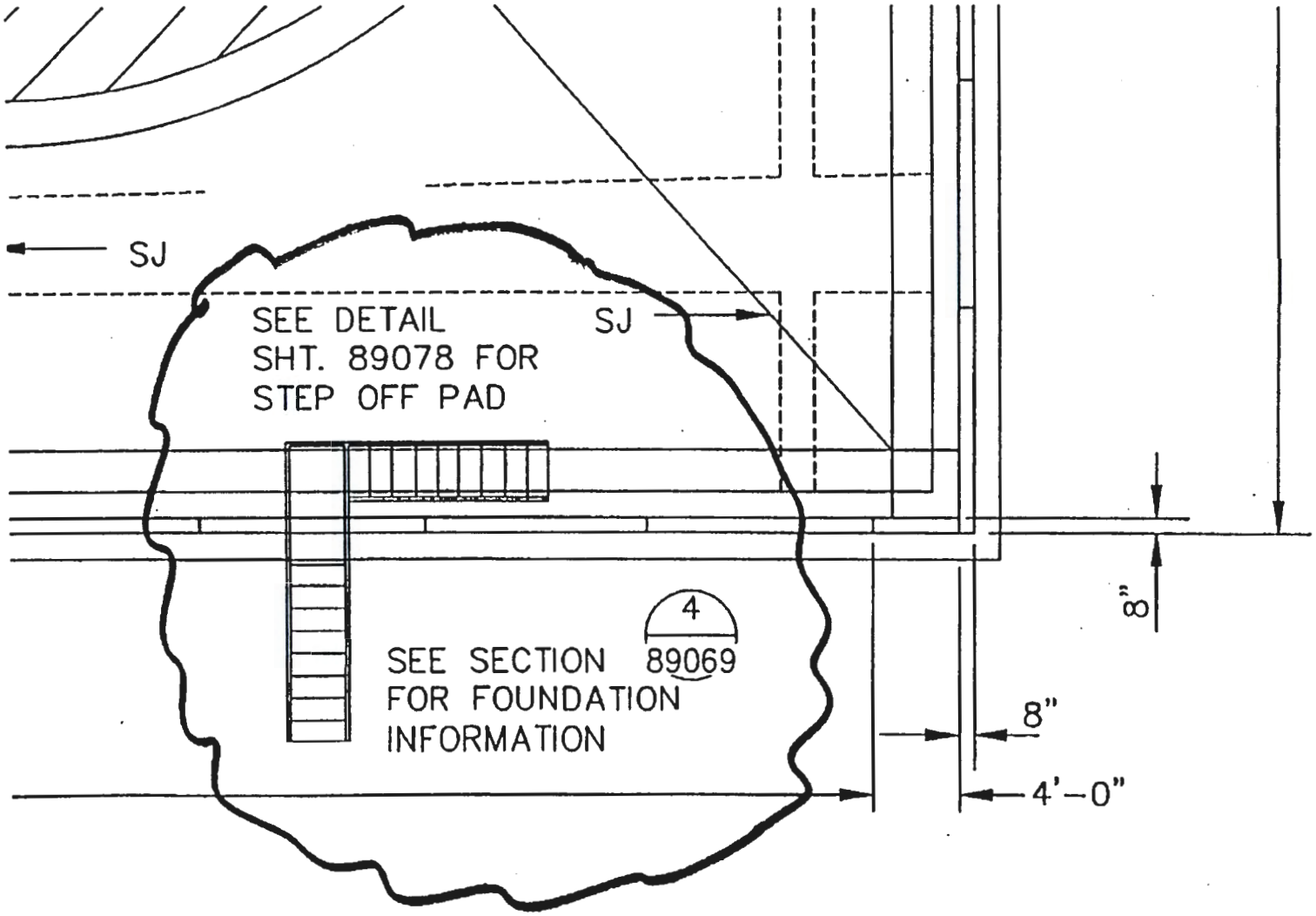

"Was"

ECN 647892, pg 24 of 27
H-2-89069, SH 1

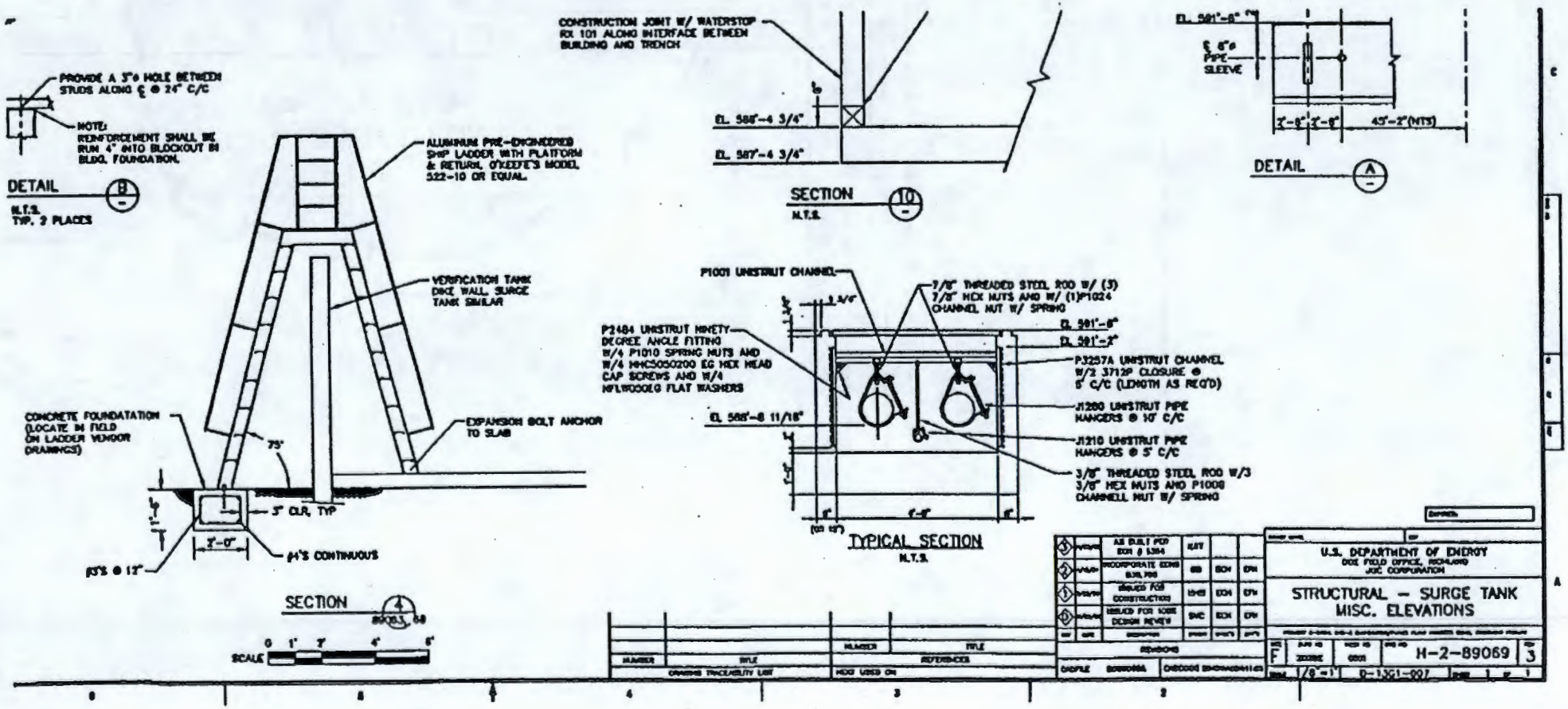

"I"

ECN 647892, Pg 25 of 27

H-2-89069, SH 1

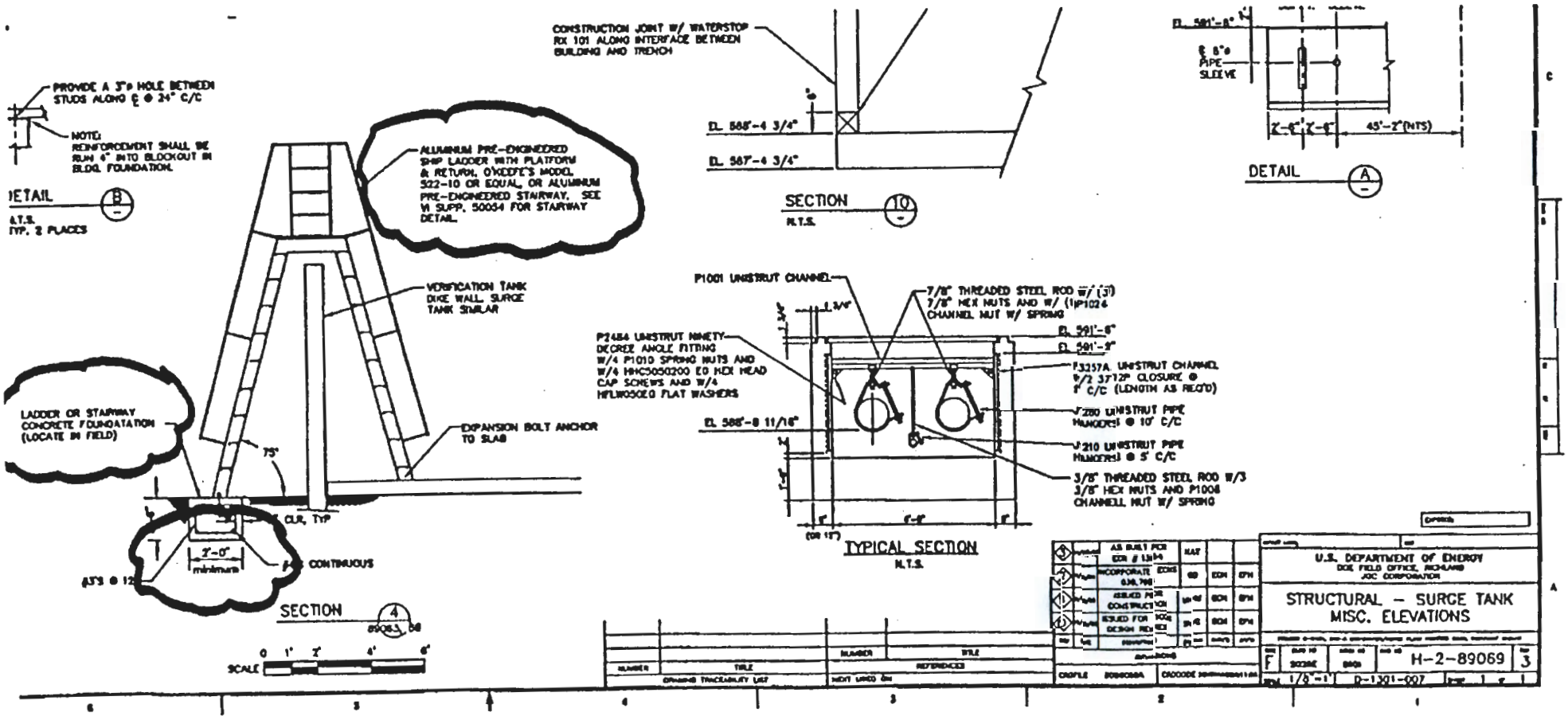

"Was

ECN 647892, PG 26 of 27
14-2-89078, SH 1

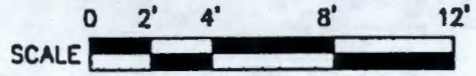

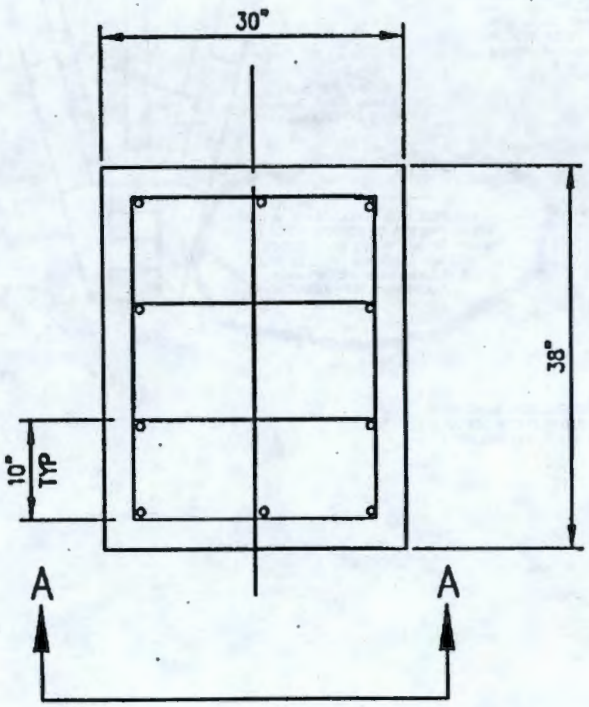

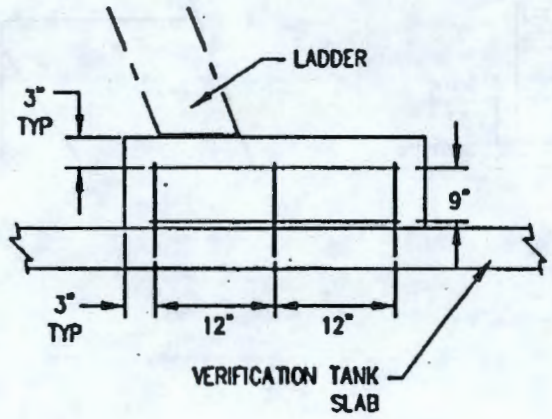

SHIP'S LADDER PLAN
VERIFICATION TANK

B

A

8 7 6

"2"

ECN 647892, PG 27 of 27
H-2-89078, SH 1

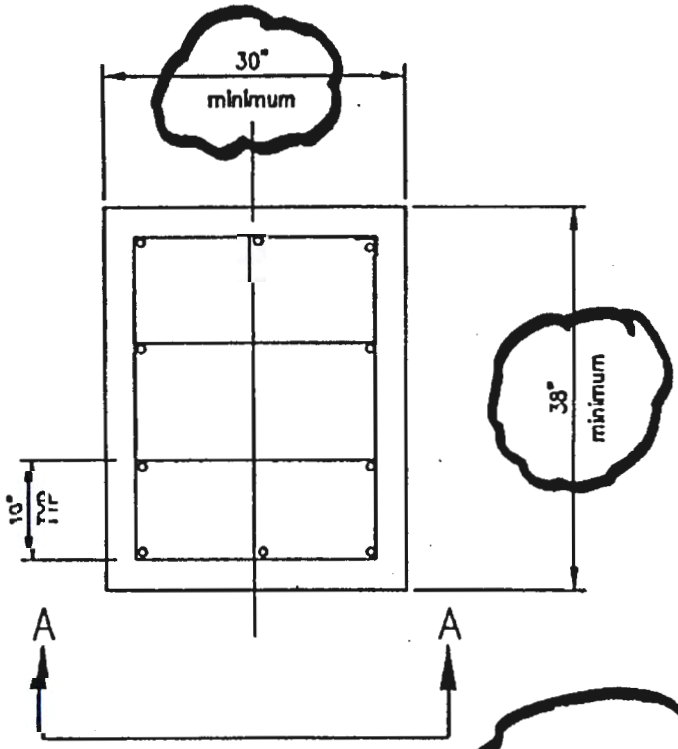

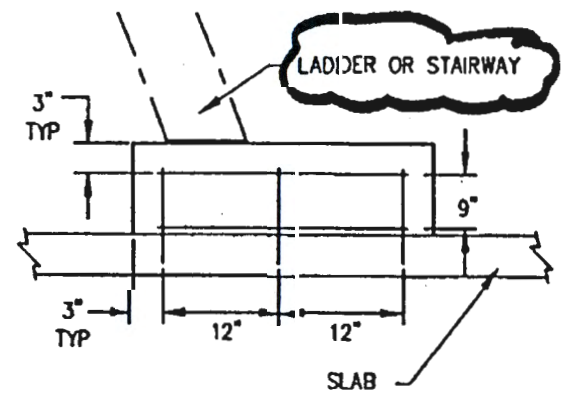

LADDER OR STAIRWAY
STEP OFF PAD

B

A

8 7 6

FILE COPY

ESSENTIAL

ENGINEERING CHANGE NOTICE

CPF 18

1. ECN 641703

Proj. ECN

2. ECN Category (mark one)	3. Originator's Name, Organization, MSIN, and Telephone No.	4. USQ Required?	5. Date
Supplemental [X] Direct Revision [] Change ECN [] Temporary [] Standby [] Supersedure [] Cancel/Void []	RN Wagner/32200/S6-71/376-4460	[] Yes [X] No	May 13, 1997
	6. Project Title/No./Work Order No.: Misc. Mods and As-Builts for ETF Load-In Station	7. Bldg./Sys./Fac. No.: 2025E/59A,60M/ 200 Area ETF	8. Approval Designator: NA
	9. Document Numbers Changed by this ECN (includes sheet no. and rev.): See Block 13A	10. Related ECN No(s).: N/A	11. Related PO No.: NA

12a. Modification Work	12b. Work Package No.	12c. Modification Work Complete	12d. Restored to Original Condition (Temp. or Standby ECN only)
[X] Yes (fill out Blk. 12b) [] No (NA Blks. 12b, 12c, 12d)	EL-96-00208, EL-97-00343	JUN 12 1997 25 6/10/97 Design Authority/Cog. Engineer Signature & Date	NA Design Authority/Cog. Engineer Signature & Date

13a. Description of Change — 13b. Design Baseline Document? [X] Yes [] No

This ECN implements the following changes:

- Remove flow orifice in System 60M transfer line from Load-In Station.
- As-build sample valve and tanker vent valving.
- Add drain lines and valves to Load-In Station pump cases.
- Add bell-reducer funnels and valving to suction of Load-In Station pumps.
- Replace "Facility" with "Station" in all Load-In drawing titles.
- Identify status of Load-In Station drawings to Essential or Support.

Piping, fittings and jointing methods to meet the requirements of Hanford Site piping specification Class M-9. Install, inspect and test the new piping installation in accordance with ASME B31.3 and Addenda for Category D fluid service.

(Block 13a continued on Page 3)

14a. Justification (mark one)

Criteria Change	[]	Design Improvement	[X]	Environmental	[]	Facility Deactivation	[]
As-Found	[X]	Facilitate Const	[]	Const. Error/Omission	[]	Design Error/Omission	[]

14b. Justification Details

- Remove flow orifice in transfer line from Load-In Station to increase flow rate.
- As-build sample valve and tanker vent valving for configuration control.
- Add drain lines and valves to Load-In Station pump cases for improved contamination control.
- Add bell-reducer funnels and valving to allow priming of Load-In Station pumps.
- Replace "Facility" with "Station" in drawing titles to reflect the status of the Load-In Station as part of the 200 Area ETF, rather than a stand-alone facility.
- Identify status of Load-In Station drawings to Essential or Support, as appropriate.

15. Distribution (include name, MSIN, and no. of copies)

N. J. Sullivan	S6-72	1	R. J. Nicklas	S6-72	1
J. E. Geary	S6-71	2	A. K. Yoakum	S6-71	1
R. N. Wagner*	S6-71	2	S. P. Biglin*	S6-74	1
C. M. Towne	S6-74	1	E. A. McNamar*	S6-74	1
J. L. Vigue	S6-74	1	B. S. Darling	S6-72	1
J. F. Berger	S6-74	1	D. P. Nelsen	S6-71	1
T. W. Dallas	S6-71	1	Stations 3/4/5/15/16/30		

(* Advance Copies)

RELEASE STAMP

MAY 27 1997

DATE: HANFORD RELEASE

STA: 30 IS: 25

A-7900-013-2 (05/96) GEF095

ENGINEERING CHANGE NOTICE	Page 2 of 24	1. ECN (use no. from pg. 1) 641703

16. Design Verification Required	17. Cost Impact				18. Schedule Impact (days)	
	ENGINEERING NA		CONSTRUCTION			
[X] Yes	Additional	[] $	Additional	[] $	Improvement	[]
[] No	Savings	[] $	Savings	[] $	Delay	[]

19. Change Impact Review: Indicate the related documents (other than the engineering documents identified on Side 1) that will be affected by the change described in Block 13. Enter the affected document number in Block 20.

SDD/DD	[]	Seismic/Stress Analysis	[]	Tank Calibration Manual	[]
Functional Design Criteria	[]	Stress/Design Report	[]	Health Physics Procedure	[]
Operating Specification	[]	Interface Control Drawing	[]	Spares Multiple Unit Listing	[]
Criticality Specification	[]	Calibration Procedure	[]	Test Procedures/Specification	[]
Conceptual Design Report	[]	Installation Procedure	[]	Component Index	[X]
Equipment Spec.	[]	Maintenance Procedure	[]	ASME Coded Item	[]
Const. Spec.	[]	Engineering Procedure	[]	Human Factor Consideration	[]
Procurement Spec.	[]	Operating Instruction	[]	Computer Software	[]
Vendor Information	[X]	Operating Procedure	[]	Electric Circuit Schedule	[]
OM Manual	[]	Operational Safety Requirement	[]	ICRS Procedure	[]
FSAR/SAR	[]	IEFD Drawing	[]	Process Control Manual/Plan	[]
Safety Equipment List	[]	Cell Arrangement Drawing	[]	Process Flow Chart	[]
Radiation Work Permit	[]	Essential Material Specification	[]	Purchase Requisition	[]
Environmental Impact Statement	[]	Fac. Proc. Samp. Schedule	[]	Tickler File	[]
Environmental Report	[]	Inspection Plan	[]		[]
Environmental Permit	[]	Inventory Adjustment Request	[]		[]

20. Other Affected Documents: (NOTE: Documents listed below will not be revised by this ECN.) Signatures below indicate that the signing organization has been notified of other affected documents listed below.

Document Number/Revision	Document Number/Revision	Document Number Revision
JCS Database (Component Index)		

21. Approvals

	Signature	Date		Signature	Date
Design Authority - R. N. Wagner	[signature]	5/23/97	Design Agent		
Cog. Eng. - R. N. Wagner	[signature]	5/23/97	PE		
Cog. Mgr. - R. J. Nicklas	[signature] FOR	5-23-97	QA		
QA			Safety		
Safety			Design		
Environ.			Environ.		
Other			Other		

DEPARTMENT OF ENERGY

Signature or a Control Number that tracks the Approval Signature

ADDITIONAL

A-7900-013-3 (05/96) GEF096

Documents changed by this ECN (also see attached drawing changes):

H-2-88766, Sheet 4, Rev. 2
H-2-88779, Sheet 4, Rev. 0
H-9-203, Sheet 1, Rev. 0
H-9-203, Sheet 4, Rev. 0
H-2-817968, Sheet 1, Rev. 1*
H-2-817969, Sheet 1, Rev. 1*
H-2-817969, Sheet 2, Rev. 1*
H-2-817969, Sheet 3, Rev. 1*
H-2-817969, Sheet 4, Rev. 1*
H-2-817969, Sheet 5, Rev. 1*
H-2-817970, Sheet 1, Rev. 1*
H-2-817970, Sheet 2, Rev. 1*
H-2-817971, Sheet 1, Rev. 1*
H-2-817971, Sheet 2, Rev. 1*
H-2-817972, Sheet 1, Rev. 1*
H-2-817973, Sheet 1, Rev. 1*
H-2-817974, Sheet 1, Rev. 2*
H-2-817975, Sheet 1, Rev. 1*
H-2-817976, Sheet 1, Rev. 1*
H-2-817977, Sheet 1, Rev. 1*
H-2-817978, Sheet 1, Rev. 1*
H-2-817980, Sheet 1, Rev. 1*
H-2-817981, Sheet 1, Rev. 1*
H-2-817981, Sheet 2, Rev. 1*
H-2-817981, Sheet 3, Rev. 1*
H-2-817981, Sheet 4, Rev. 1*
H-2-817981, Sheet 5, Rev. 1*
H-2-817983, Sheet 1, Rev. 0*
H-2-817983, Sheet 2, Rev. 1*
H-2-817983, Sheet 3, Rev. 0*
H-2-817983, Sheet 4, Rev. 1*
H-2-817983, Sheet 5, Rev. 0*
H-2-817983, Sheet 6, Rev. 1*
H-2-817983, Sheet 7, Rev. 0*
H-2-817983, Sheet 8, Rev. 0*
H-2-817985, Sheet 1, Rev. 1*
H-2-817985, Sheet 2, Rev. 1*
H-2-817987, Sheet 1, Rev. 1*
H-2-817987, Sheet 3, Rev. 1*
H-2-817987, Sheet 4, Rev. 1*
H-2-817988, Sheet 1, Rev. 1*
H-2-817988, Sheet 2, Rev. 1*
H-2-817988, Sheet 3, Rev. 1*
H-2-817989, Sheet 1, Rev. 1*
H-2-817990, Sheet 1, Rev. 1*
H-2-817991, Sheet 2, Rev. 1*

(* Title and/or Essential/Support status is changed for these drawings per this ECN.)

H-2-88766, Sheet 4, Rev. 2, Zone D-2

IS:

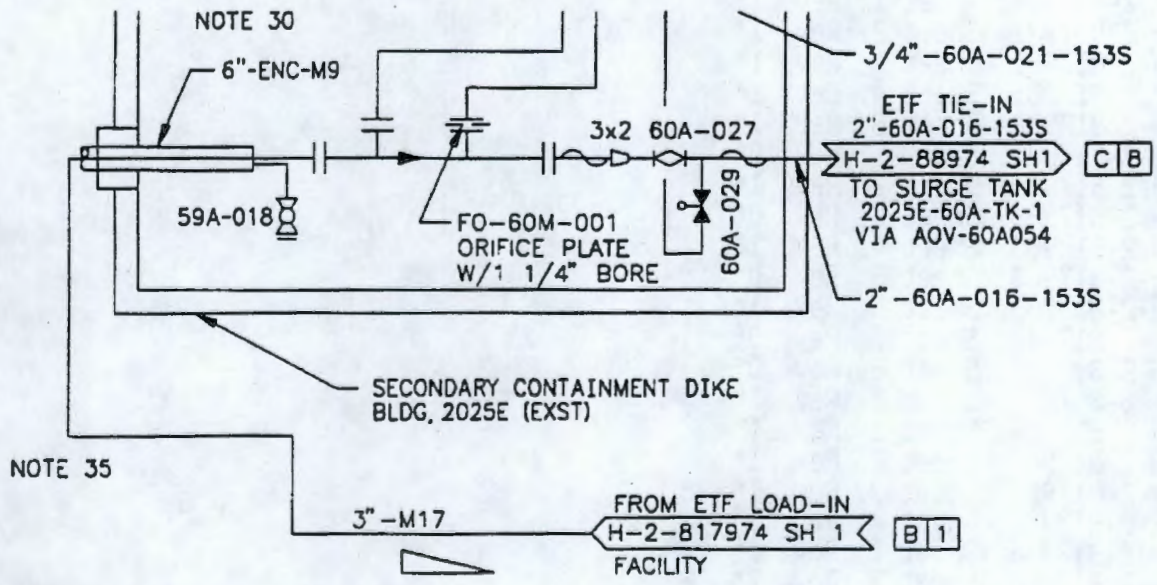

H-2-88766, Sheet 4, Rev. 2, Zone D-2

CHANGE TO:

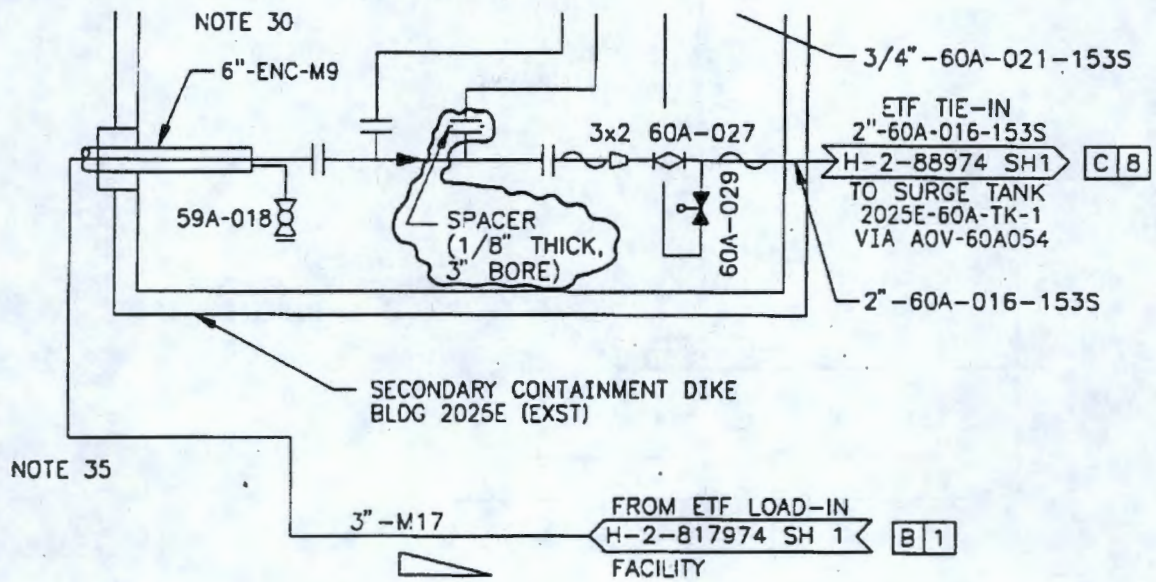

H-2-88779, Sheet 4, Rev. 0, Zone B-2

IS:

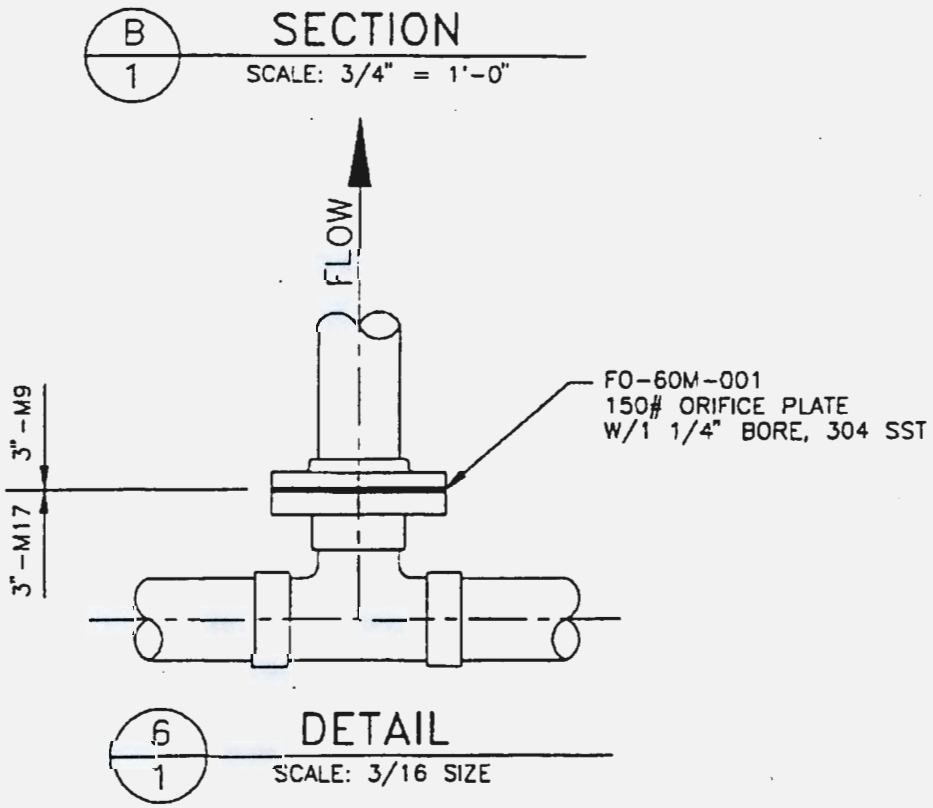

H-2-88779, Sheet 4, Rev. 0, Zone B-2

CHANGE TO:

B/1 SECTION
SCALE: 3/4" = 1'-0"

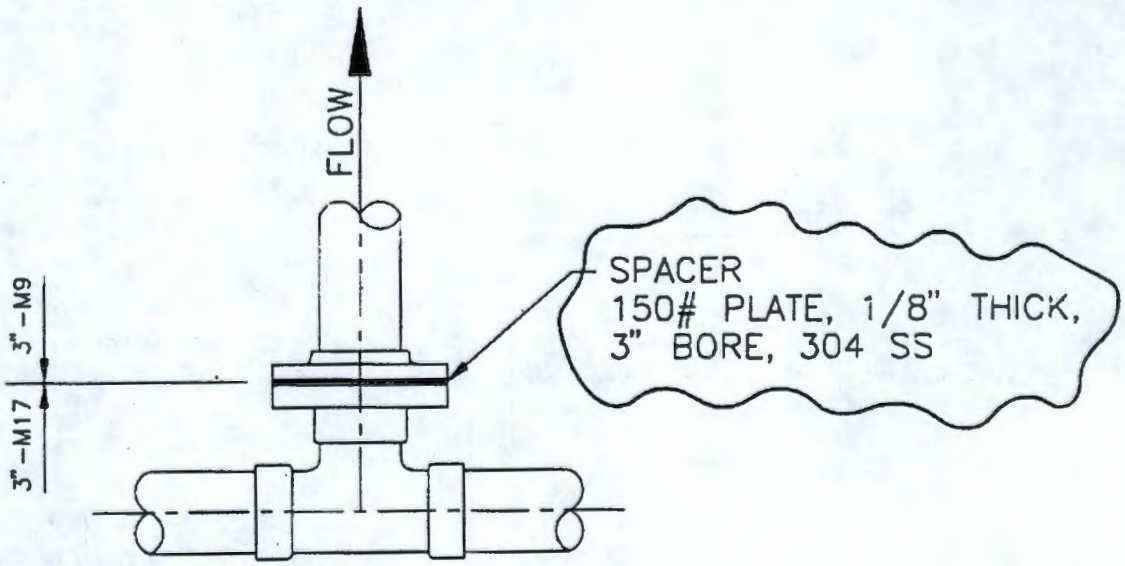

6/1 DETAIL
SCALE: 3/16 SIZE

Sketch for 3" spacer shown in above changes to H-2-88779 and H-2-88766

3" FLANGE SPACER FOR ECN 641703

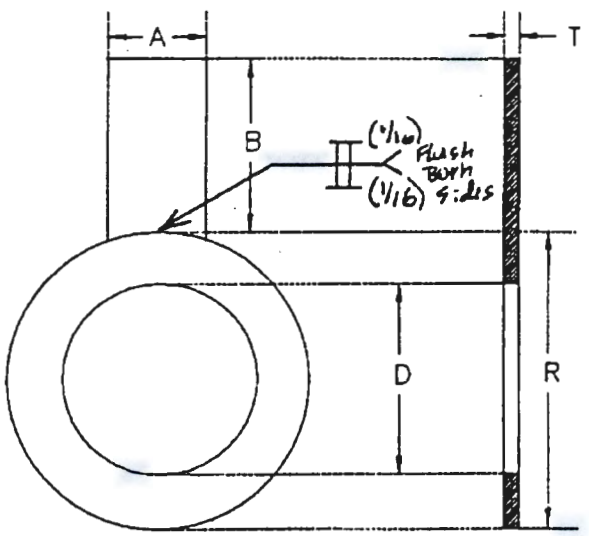

T = 1/8" PLATE THICKNESS

A = 2" (APPROX)
B = 3" (APPROX)

D = 3.00" +/- .05"
R = 5.25" +/- .05"

MATERIAL = 304SS
FLANGE CLASS = 150 LB

H-2-817974, Sheet 1, Rev. 2, Zone C-5

IS:

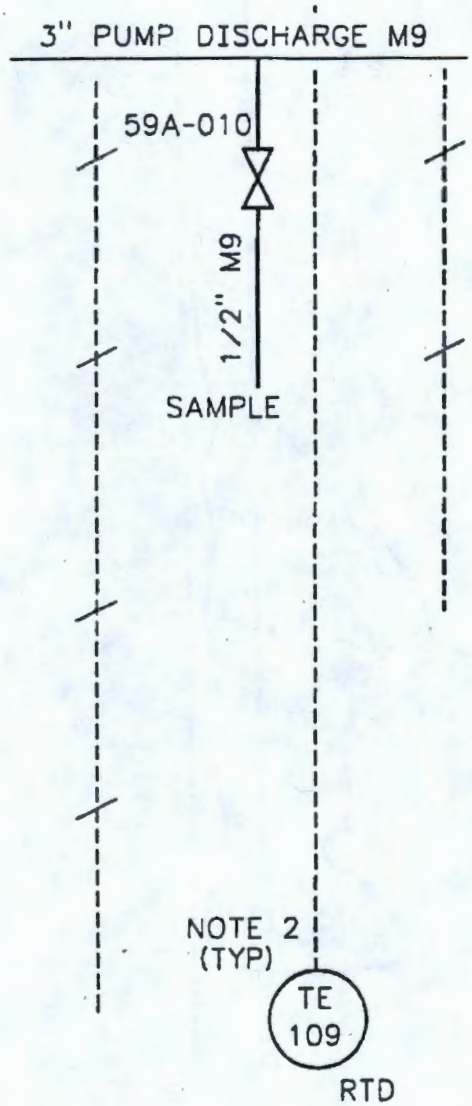

H-2-817974, Sheet 1, Rev. 2, Zone C-5

CHANGE TO:

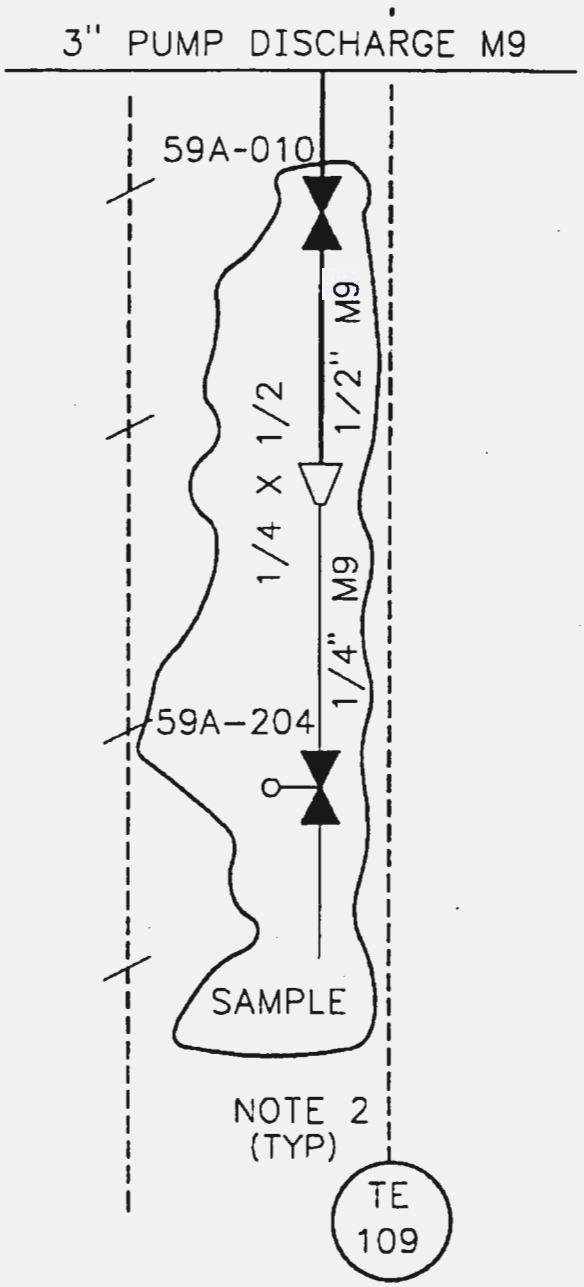

H-2-817974, Sheet 1, Rev. 2, Zone C-7 to D-7

IS:

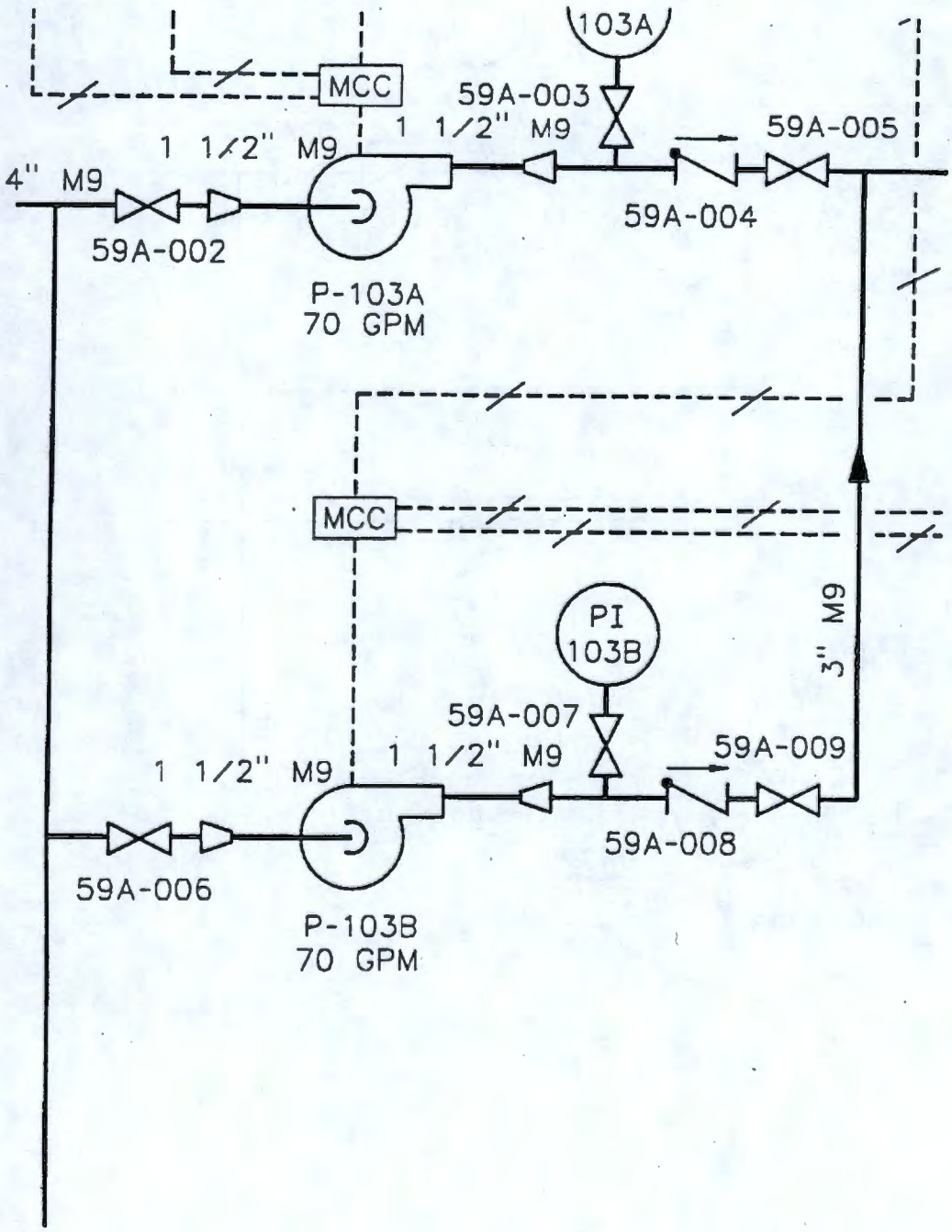

H-2-817974, Sheet 1, Rev. 2, Zone C-7 to D-7

CHANGE TO:

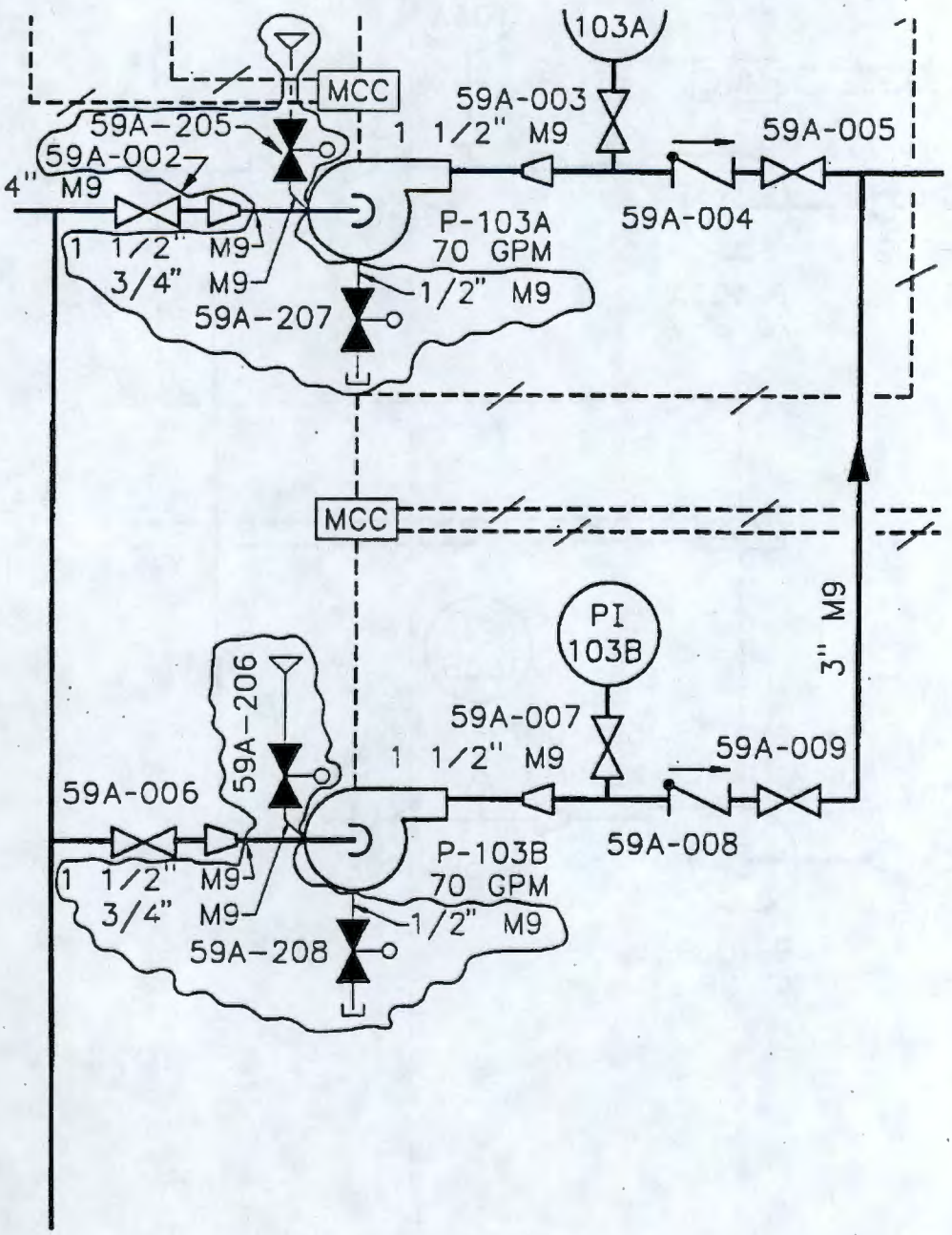

H-9-203, Sheet 1, Rev. 0, Zone E-6

IS:

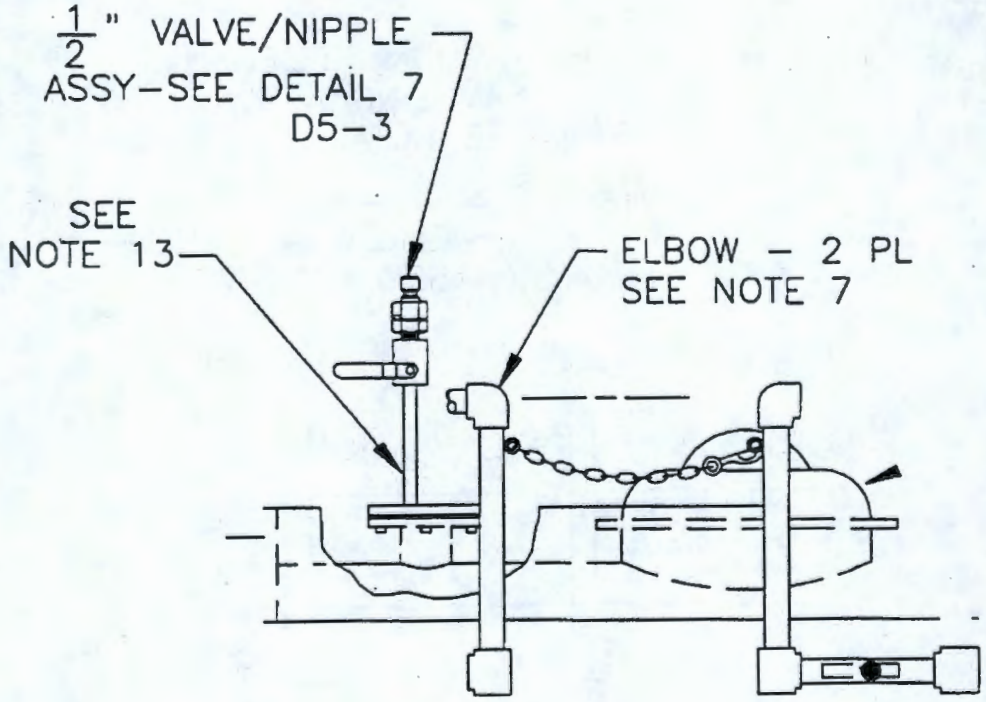

H-9-203, Sheet 1, Rev. 0, Zone E-6

CHANGE TO:

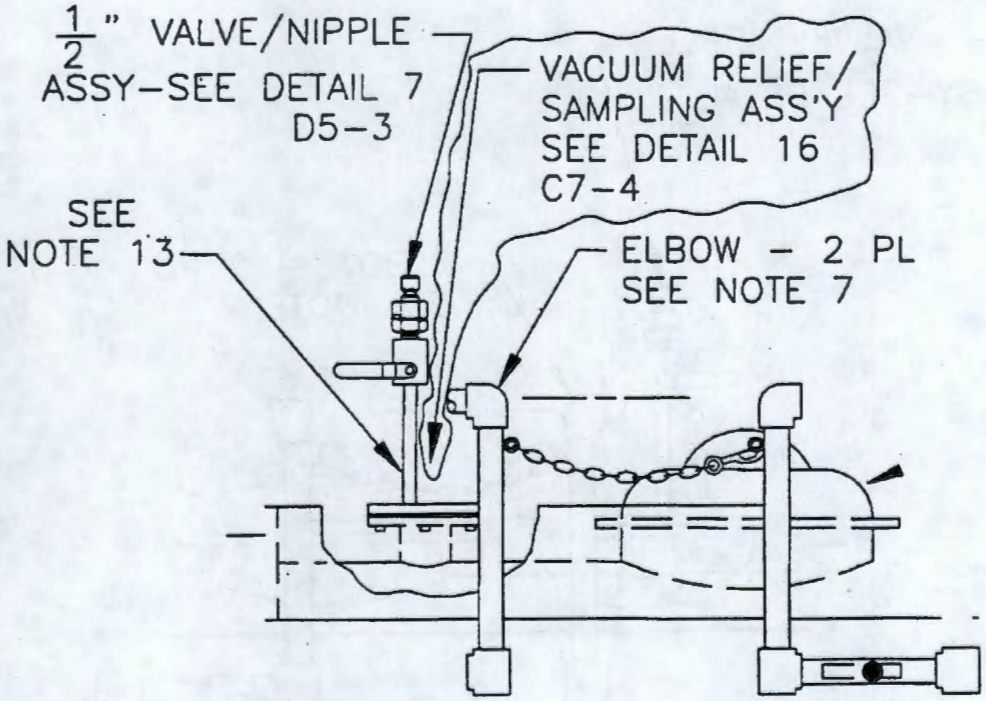

H-9-203, Sheet 4, Rev. 0, Zone D-7

IS:

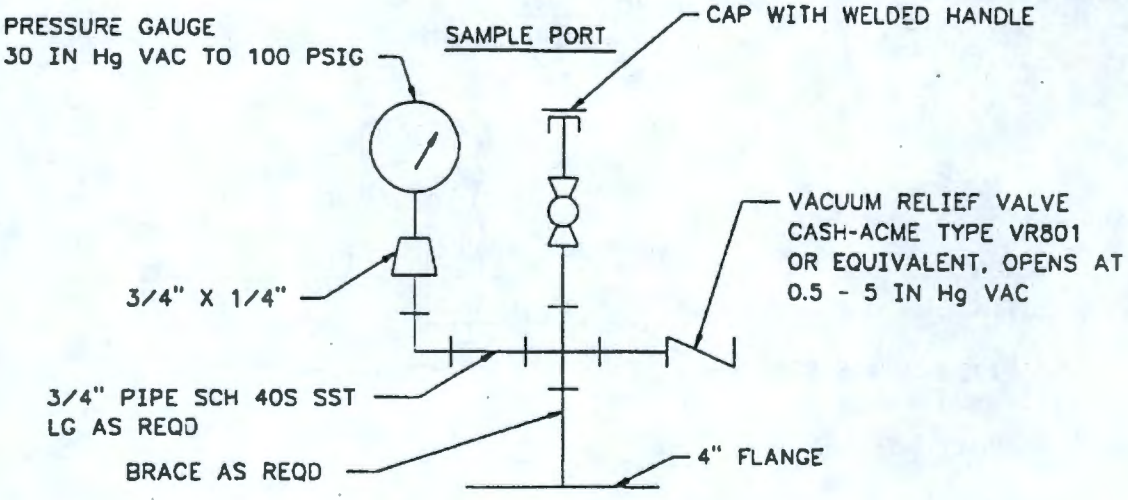

DETAIL 16 C6-2

SCALE: NONE

H-9-203, Sheet 4, Rev. 0, Zone D-7

CHANGE TO:

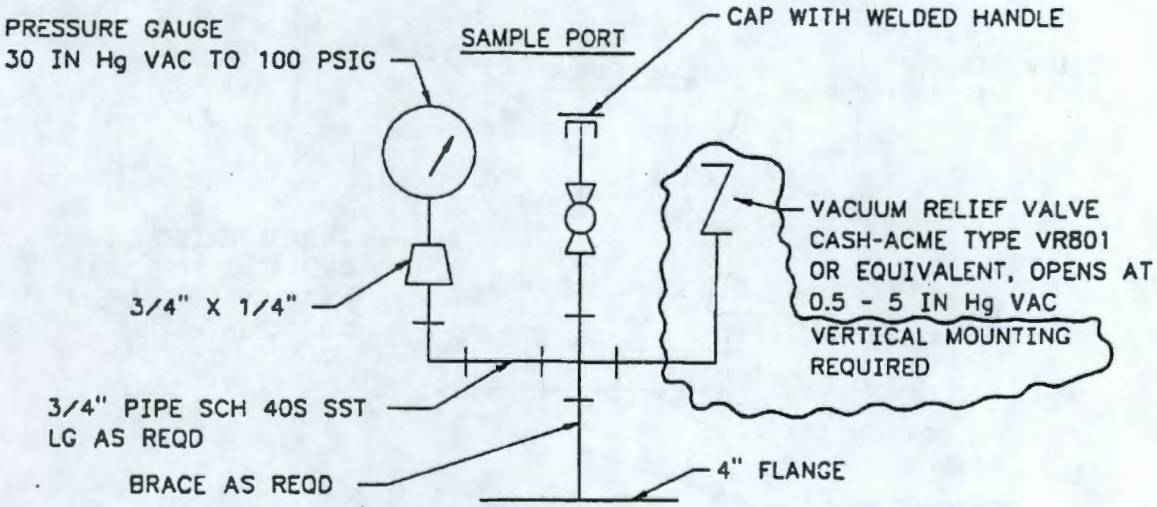

DETAIL 16 C6-2, E6-1

SCALE: NONE

H-2-817968, Sheet 1, Rev. 1, Title

IS: ETF TRUCK LOAD-IN FACILITY LOCATION PLAN & DWG LIST

CHANGE TO: ETF TRUCK LOAD-IN STATION LOCATION PLAN & DWG LIST

Drawing Status: ESSENTIAL

H-2-817969, Sheet 1, Rev. 1, Title

IS: CIVIL ETF TRUCK LOAD-IN FACILITY SITE PLAN

CHANGE TO: CIVIL ETF TRUCK LOAD-IN STATION SITE PLAN

Drawing Status: SUPPORT

H-2-817969, Sheet 2, Rev. 1, Title

IS: CIVIL ETF TRUCK LOAD-IN FACILITY PLAN AND PROFILES

CHANGE TO: CIVIL ETF TRUCK LOAD-IN STATION PLAN AND PROFILES

Drawing Status: SUPPORT

H-2-817969, Sheet 3, Rev. 1, Title

IS: CIVIL ETF TRUCK LOAD-IN FACILITY ENLARGED PLAN

CHANGE TO: CIVIL ETF TRUCK LOAD-IN STATION ENLARGED PLAN

Drawing Status: SUPPORT

H-2-817969, Sheet 4, Rev. 1, Title

IS: CIVIL ETF TRUCK LOAD-IN FACILITY MISCELLANEOUS DETAILS

CHANGE TO: CIVIL ETF TRUCK LOAD-IN STATION MISCELLANEOUS DETAILS

Drawing Status: SUPPORT

H-2-817969, Sheet 5, Rev. 1, Title

IS: CIVIL ETF TRUCK LOAD-IN FACILITY MISCELLANEOUS DETAILS

CHANGE TO: CIVIL ETF TRUCK LOAD-IN STATION MISCELLANEOUS DETAILS

Drawing Status: SUPPORT

H-2-817970, Sheet 1, Rev. 1, Title

IS: STRUCTURAL ETF TRUCK LOAD-IN FACILITY PLAN AND SECTIONS

CHANGE TO: STRUCTURAL ETF TRUCK LOAD-IN STATION PLAN AND SECTIONS

Drawing Status: SUPPORT

H-2-817970, Sheet 2, Rev. 1, Title

IS: STRUCTURAL ETF TRUCK LOAD-IN FACILITY SECTIONS AND DETAILS

CHANGE TO: STRUCTURAL ETF TRUCK LOAD-IN STATION SECTIONS AND DETAILS

Drawing Status: SUPPORT

H-2-817971, Sheet 1, Rev. 1, Title

IS: STRUCTURAL ETF TRUCK LOAD-IN FACILITY STEEL PLAN & SECTIONS

CHANGE TO: STRUCTURAL ETF TRUCK LOAD-IN STATION STEEL PLAN & SECTIONS

Drawing Status: SUPPORT

H-2-817971, Sheet 2, Rev. 1, Title

IS: STRUCTURAL ETF TRUCK LOAD-IN FACILITY STEEL DETAILS

CHANGE TO: STRUCTURAL ETF TRUCK LOAD-IN STATION STEEL DETAILS

Drawing Status: SUPPORT

H-2-817972, Sheet 1, Rev. 1, Title

IS: STRUCTURAL ETF TRUCK LOAD-IN FACILITY SECTIONS AND DETAILS

CHANGE TO: STRUCTURAL ETF TRUCK LOAD-IN STATION SECTIONS AND DETAILS

Drawing Status: SUPPORT

H-2-817973, Sheet 1, Rev. 1, Title

IS: STRUCTURAL ETF TRUCK LOAD-IN FACILITY MISC SECTIONS AND DETAILS

CHANGE TO: STRUCTURAL ETF TRUCK LOAD-IN STATION MISC SECTIONS AND DETAILS

Drawing Status: SUPPORT

H-2-817974, Sheet 1, Rev. 2, Title

IS: P & ID ETF TRUCK LOAD-IN FACILITY

CHANGE TO: P & ID ETF TRUCK LOAD-IN STATION

Drawing Status: ESSENTIAL

H-2-817975, Sheet 1, Rev. 1, Title

IS: PIPING ETF TRUCK LOAD-IN FACILITY PLAN

CHANGE TO: PIPING ETF TRUCK LOAD-IN STATION PLAN

Drawing Status: ESSENTIAL

H-2-817976, Sheet 1, Rev. 1, Title

IS: PIPING ETF TRUCK LOAD-IN FACILITY SECTIONS AND DETAILS

CHANGE TO: PIPING ETF TRUCK LOAD-IN STATION SECTIONS AND DETAILS

Drawing Status: SUPPORT

H-2-817977, Sheet 1, Rev. 1, Title

IS: PIPING ETF TRUCK LOAD-IN FACILITY DETAILS

CHANGE TO: PIPING ETF TRUCK LOAD-IN STATION DETAILS

Drawing Status: SUPPORT

H-2-817978, Sheet 1, Rev. 1, Title

IS: PIPING ETF TRUCK LOAD-IN FACILITY PIPE SUPPORTS

CHANGE TO: PIPING ETF TRUCK LOAD-IN STATION PIPE SUPPORTS

Drawing Status: SUPPORT

H-2-817980, Sheet 1, Rev. 1, Title

IS: INSTRUMENTATION ETF TRUCK LOAD-IN FACILITY LEGEND & SYMBOLS

CHANGE TO: INSTRUMENTATION ETF TRUCK LOAD-IN STATION LEGEND & SYMBOLS

Drawing Status: SUPPORT

H-2-817981, Sheet 1, Rev. 1, Title

IS: INSTRUMENTATION ETF TRUCK LOAD-IN FACILITY LOOP DIAGRAM

CHANGE TO: INSTRUMENTATION ETF TRUCK LOAD-IN STATION LOOP DIAGRAM

Drawing Status: SUPPORT

H-2-817981, Sheet 2, Rev. 1, Title

IS: INSTRUMENTATION ETF TRUCK LOAD-IN FACILITY LOOP DIAGRAM

CHANGE TO: INSTRUMENTATION ETF TRUCK LOAD-IN STATION LOOP DIAGRAM

Drawing Status: SUPPORT

H-2-817981, Sheet 3, Rev. 1, Title

IS: INSTRUMENTATION ETF TRUCK LOAD-IN FACILITY LOOP DIAGRAM

CHANGE TO: INSTRUMENTATION ETF TRUCK LOAD-IN STATION LOOP DIAGRAM

Drawing Status: SUPPORT

H-2-817981, Sheet 4, Rev. 1, Title

IS: INSTRUMENTATION ETF TRUCK LOAD-IN FACILITY LOOP DIAGRAM

CHANGE TO: INSTRUMENTATION ETF TRUCK LOAD-IN STATION LOOP DIAGRAM

Drawing Status: SUPPORT

H-2-817981, Sheet 5, Rev. 1, Title

IS: INSTRUMENTATION ETF TRUCK LOAD-IN FACILITY LOOP DIAGRAM

CHANGE TO: INSTRUMENTATION ETF TRUCK LOAD-IN STATION LOOP DIAGRAM

Drawing Status: SUPPORT

H-2-817983, Sheet 1, Rev. 0, Title

CHANGE TO: Drawing Status: SUPPORT

H-2-817983, Sheet 2, Rev. 1, Title

CHANGE TO: Drawing Status: SUPPORT

H-2-817983, Sheet 3, Rev. 0, Title

CHANGE TO: Drawing Status: SUPPORT

H-2-817983, Sheet 4, Rev. 1, Title

CHANGE TO: Drawing Status: SUPPORT

H-2-817983, Sheet 5, Rev. 0, Title

CHANGE TO: Drawing Status: SUPPORT

H-2-817983, Sheet 6, Rev. 1, Title

CHANGE TO: Drawing Status: SUPPORT

H-2-817983, Sheet 7, Rev. 0, Title

CHANGE TO: Drawing Status: SUPPORT

H-2-817983, Sheet 8, Rev. 0, Title

CHANGE TO: Drawing Status: SUPPORT

H-2-817985, Sheet 1, Rev. 1, Title

IS: INSTRUMENTATION ETF TRUCK LOAD-IN FACILITY SECTIONS AND DETAILS

CHANGE TO: INSTRUMENTATION ETF TRUCK LOAD-IN STATION SECTIONS AND DETAILS

Drawing Status: SUPPORT

H-2-817985, Sheet 2, Rev. 1, Title

IS: INSTRUMENTATION ETF TRUCK LOAD-IN FACILITY SECTIONS AND DETAILS

CHANGE TO: INSTRUMENTATION ETF TRUCK LOAD-IN STATION SECTIONS AND DETAILS

Drawing Status: SUPPORT

H-2-817987, Sheet 1, Rev. 1, Title

IS: ELECTRICAL ETF TRUCK LOAD-IN FACILITY SITE PLAN

CHANGE TO: ELECTRICAL ETF TRUCK LOAD-IN STATION SITE PLAN

Drawing Status: SUPPORT

H-2-817987, Sheet 3, Rev. 1, Title

IS: ELECTRICAL ETF TRUCK LOAD-IN FACILITY SECTIONS & DETAILS

CHANGE TO: ELECTRICAL ETF TRUCK LOAD-IN STATION SECTIONS & DETAILS

Drawing Status: SUPPORT

H-2-817987, Sheet 4, Rev. 1, Title

IS: ELECTRICAL ETF TRUCK LOAD-IN FACILITY SECTIONS & DETAILS

CHANGE TO: ELECTRICAL ETF TRUCK LOAD-IN STATION SECTIONS & DETAILS

Drawing Status: SUPPORT

H-2-817988, Sheet 1, Rev. 1, Title

IS: ELECTRICAL ETF TRUCK LOAD-IN FACILITY PLAN, ONE-LINE & DETAILS

CHANGE TO: ELECTRICAL ETF TRUCK LOAD-IN STATION PLAN, ONE-LINE & DETAILS

Drawing Status: ESSENTIAL

H-2-817988, Sheet 2, Rev. 1, Title

IS: ELECTRICAL ETF TRUCK LOAD-IN FACILITY PLAN, GND & HEAT TRACING

CHANGE TO: ELECTRICAL ETF TRUCK LOAD-IN STATION PLAN, GND & HEAT TRACING

Drawing Status: ESSENTIAL

H-2-817988, Sheet 3, Rev. 1, Title

IS: ELECTRICAL ETF TRUCK LOAD-IN FACILITY PANEL SCHEDULE & DETAILS

CHANGE TO: ELECTRICAL ETF TRUCK LOAD-IN STATION PANEL SCHEDULE & DETAILS

Drawing Status: ESSENTIAL

H-2-817989, Sheet 1, Rev. 1, Title

IS: ELECTRICAL ETF TRUCK LOAD-IN FACILITY ELEMENTARY DIAGRAM

CHANGE TO: ELECTRICAL ETF TRUCK LOAD-IN STATION ELEMENTARY DIAGRAM

Drawing Status: ESSENTIAL

ECN 641703
Date 5/13/97

H-2-817990, Sheet 1, Rev. 1, Title

IS: ELECTRICAL ETF TRUCK LOAD-IN FACILITY WIRE & CONDUIT SCHEDULE

CHANGE TO: ELECTRICAL ETF TRUCK LOAD-IN STATION WIRE & CONDUIT SCHEDULE

Drawing Status: ESSENTIAL

H-2-817991, Sheet 2, Rev. 1, Title

IS: ELECTRICAL ETF TRUCK LOAD-IN FACILITY TELECOMMUNICATIONS

CHANGE TO: ELECTRICAL ETF TRUCK LOAD-IN STATION TELECOMMUNICATIONS

Drawing Status: SUPPORT

ESSENTIAL

ENGINEERING CHANGE NOTICE

1. ECN 647247

Proj. ECN

2. ECN Category (mark one)	3. Originator's Name, Organization, MSIN, and Telephone No.	4. USQ Required?	5. Date
Supplemental [X] Direct Revision [] Change ECN [] Temporary [] Standby [] Supersedure [] Cancel/Void []	RN Wagner/32230/S6-72/376-4460	[] Yes [X] No	August 27, 1998
	6. Project Title/No./Work Order No. Install Tent Over ETF Load-In Station/A4055	7. Bldg./Sys./Fac. No. 2025EC/59A/ 200 Area ETF	8. Approval Designator NA
	9. Document Numbers Changed by this ECN (includes sheet no. and rev.) See Block 13	10. Related ECN No(s). NA	11. Related PO No. NA

12a. Modification Work	12b. Work Package No.	12c. Modification Work Complete	12d. Restored to Original Condition (Temp. or Standby ECN only)
[X] Yes (fill out Blk. 12b) [] No (NA Blks. 12b, 12c, 12d)	EL-97-00853	JAN 15 1999 STA-30 (18) 1/13/99 Design Authority/Cog. Engineer Signature & Date	N/A Design Authority/Cog. Engineer Signature & Date

13a. Description of Change — 13b. Design Baseline Document? [X] Yes [] No

This ECN installs a tent over the ETF Load-In Station to provide shelter during inclement weather. Mechanical modifications to the Load-In Station necessary to accommodate the tent placement are covered in this ECN.

Drawings affected are:

- H-2-817970 Sheet 1, Rev. 1
- H-2-817972 Sheet 1, Rev. 1
  H-2-817975 Sheet 1, Rev. 5
- H-2-817976 Sheet 1, Rev. 1

Concrete anchor bolts for relocation of the Load-In transfer line support frame shall be Hilti P/N 0045407, Description Code KB II SS 58-812 Ext Trd, or Engineering approved equivalent. Piping, fittings, and jointing methods shall meet the requirements of Piping Specification Class M-9. Install, inspect, and test the new piping installation in accordance with ASME B31.3 and Addenda for Category D fluid service.

(Block 13a continued on Page 3)

14a. Justification (mark one)

Criteria Change	[]	Design Improvement	[X]	Environmental	[]	Facility Deactivation	[]
As-Found	[]	Facilitate Const	[]	Const. Error/Omission	[]	Design Error/Omission	[]

14b. Justification Details

The tent will provide shelter to ensure operator safety and allow continuity of operations during inclement weather.

15. Distribution (include name, MSIN, and no. of copies)

N. J. Sullivan	S6-72	1	J. E. Geary	S6-71	1
A. K. Yoakum	S6-71	1	E. A. McNamar	S6-72	1
R. N. Wagner*	S6-72	2	M. W. Bowman	S6-72	1
WCC Planning	S6-71*	1	T. W. Dallas	S6-74	1
L. L. Lin	S6-72	1	D. L. Tubbs	S6-74	1
D. L. Flyckt	S6-71	1	C. M. Towne	S6-74	1

(* = 1 Advance Copy)

IPF 7 - S6-72 1
IPF 4 - H6-26 1

RELEASE STAMP

DATE: SEP 08 1998 HANFORD RELEASE STA: 4 ID: 2

ENGINEERING CHANGE NOTICE	Page 2 of 10	1. ECN (use no. from pg. 1) 647247

16. Design Verification Required	17. Cost Impact ——> NA <—— ENGINEERING		CONSTRUCTION		18. Schedule Impact (days) ——> NA <——	
[X] Yes	Additional	[] $	Additional	[] $	Improvement	[]
[] No	Savings	[] $	Savings	[] $	Delay	[]

19. Change Impact Review: Indicate the related documents (other than the engineering documents identified on Side 1) that will be affected by the change described in Block 13. Enter the affected document number in Block 20.

SDD/DD	[NA]	Seismic/Stress Analysis	[NA]	Tank Calibration Manual	[NA]
Functional Design Criteria	[NA]	Stress/Design Report	[NA]	Health Physics Procedure	[NA]
Operating Specification	[NA]	Interface Control Drawing	[NA]	Spares Multiple Unit Listing	[NA]
Criticality Specification	[NA]	Calibration Procedure	[NA]	Test Procedures/Specification	[NA]
Conceptual Design Report	[NA]	Installation Procedure	[NA]	Component Index	[NA]
Equipment Spec.	[NA]	Maintenance Procedure	[NA]	ASME Coded Item	[NA]
Const. Spec.	[NA]	Engineering Procedure	[NA]	Human Factor Consideration	[NA]
Procurement Spec.	[NA]	Operating Instruction	[NA]	Computer Software	[NA]
Vendor Information	[NA]	Operating Procedure	[NA]	Electric Circuit Schedule	[NA]
OM Manual	[NA]	Operational Safety Requirement	[NA]	ICRS Procedure	[NA]
FSAR/SAR	[NA]	IEFD Drawing	[NA]	Process Control Manual/Plan	[NA]
Safety Equipment List	[NA]	Cell Arrangement Drawing	[NA]	Process Flow Chart	[NA]
Radiation Work Permit	[NA]	Essential Material Specification	[NA]	Purchase Requisition	[NA]
Environmental Impact Statement	[NA]	Fac. Proc. Samp. Schedule	[NA]	Tickler File	[NA]
Environmental Report	[NA]	Inspection Plan	[NA]		[]
Environmental Permit	[NA]	Inventory Adjustment Request	[NA]		[]

20. Other Affected Documents: (NOTE: Documents listed below will not be revised by this ECN.) Signatures below indicate that the signing organization has been notified of other affected documents listed below.

Document Number/Revision	Document Number/Revision	Document Number Revision
No other documents are affected by this ECN.		

21. Approvals

	Signature	Date		Signature	Date
Design Authority – R. N. Wagner	[signature]	8/27/98	Design Agent – R. N. Wagner	[signature]	8/27/98
Cog. Eng – R. N. Wagner	[signature]	8/27/98	PE		
Cog. Mgr. – N. J. Sullivan (Informal Design Review)	[signature]	9-8-98	QA		
QA			Safety		
Safety			Design		
Environ			Environ.		
Other			Other		
Operations – J. E. Geary	[signature]	9-8-98			
			DEPARTMENT OF ENERGY		
			Signature or a Control Number that tracks the Approval Signature		
			ADDITIONAL		

A-7900-013-3 (05/96) GEF096

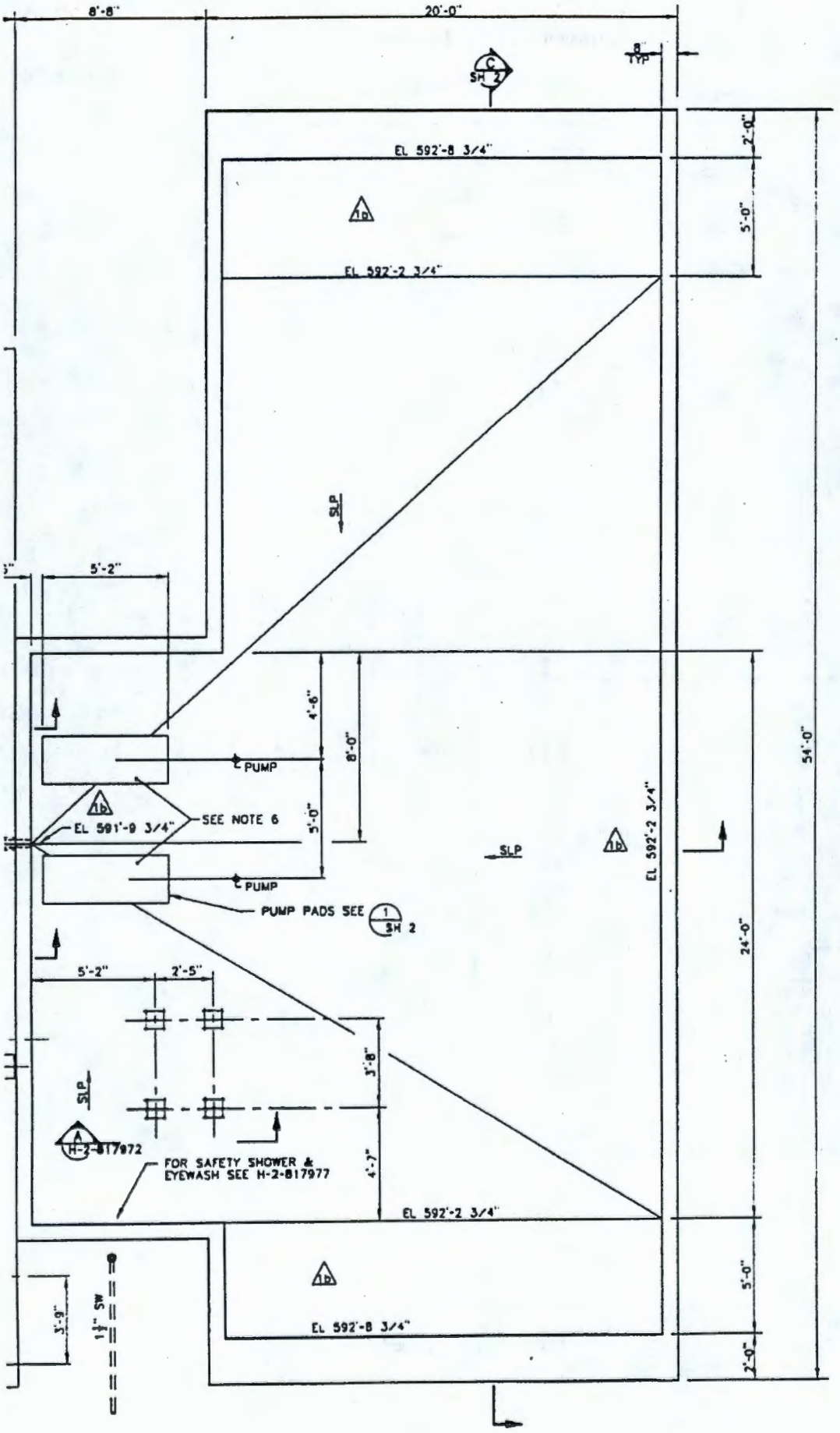
8'-8"
20'-0"
8" TYP
C SH 2
EL 592'-8 3/4"
EL 592'-2 3/4"
2'-0"
5'-0"
SLP
5'-2"
4'-6"
8'-0"
PUMP
SEE NOTE 6
EL 591'-9 3/4"
5'-0"
PUMP
PUMP PADS SEE 1 SH 2
EL 592'-2 3/4"
54'-0"
24'-0"
5'-2"
2'-5"
3'-8"
4'-7"
A H-2-817972
FOR SAFETY SHOWER & EYEWASH SEE H-2-817977
EL 592'-2 3/4"
EL 592'-8 3/4"
5'-0"
2'-0"
3'-9"
1½" SW

CHANGE TO:

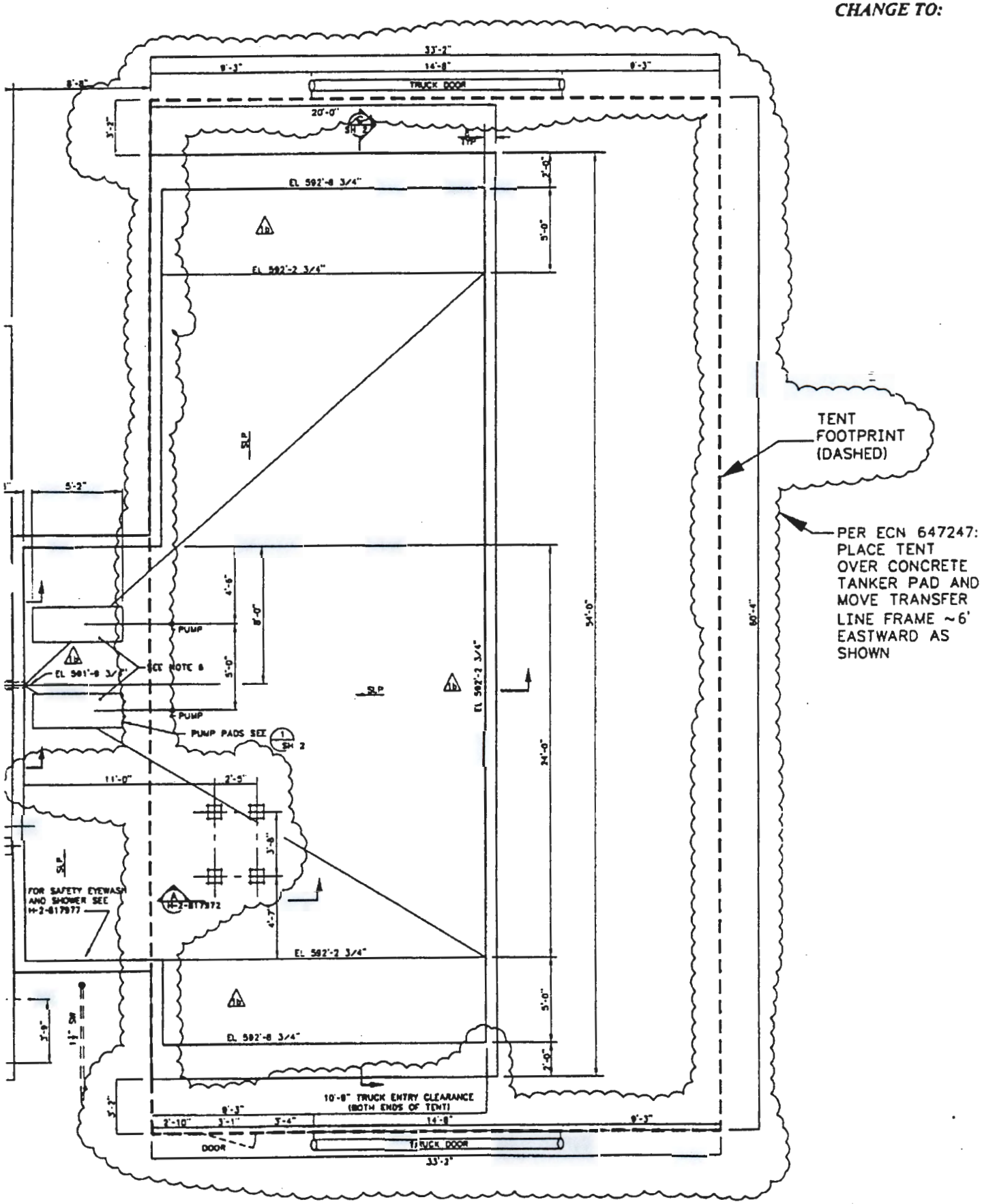
TENT FOOTPRINT (DASHED)
PER ECN 647247: PLACE TENT OVER CONCRETE TANKER PAD AND MOVE TRANSFER LINE FRAME ~6' EASTWARD AS SHOWN
TRUCK DOOR
EL 592'-8 3/4"
EL 592'-2 3/4"
EL 591'-8 3/4"
PUMP
PUMP PADS SEE
SEE NOTE 6
FOR SAFETY EYEWASH AND SHOWER SEE H-2-817977
H-2-817972
10'-8" TRUCK ENTRY CLEARANCE (BOTH ENDS OF TENT)
DOOR
33'-2"
14'-8"
9'-3"
20'-0"
54'-0"
80'-4"
24'-0"
11'-0"
2'-5"
5'-2"

Block 13a Cont'd
H-2-817972 Sh 1 Rev 1
Zones C4–F8
IS NOW:

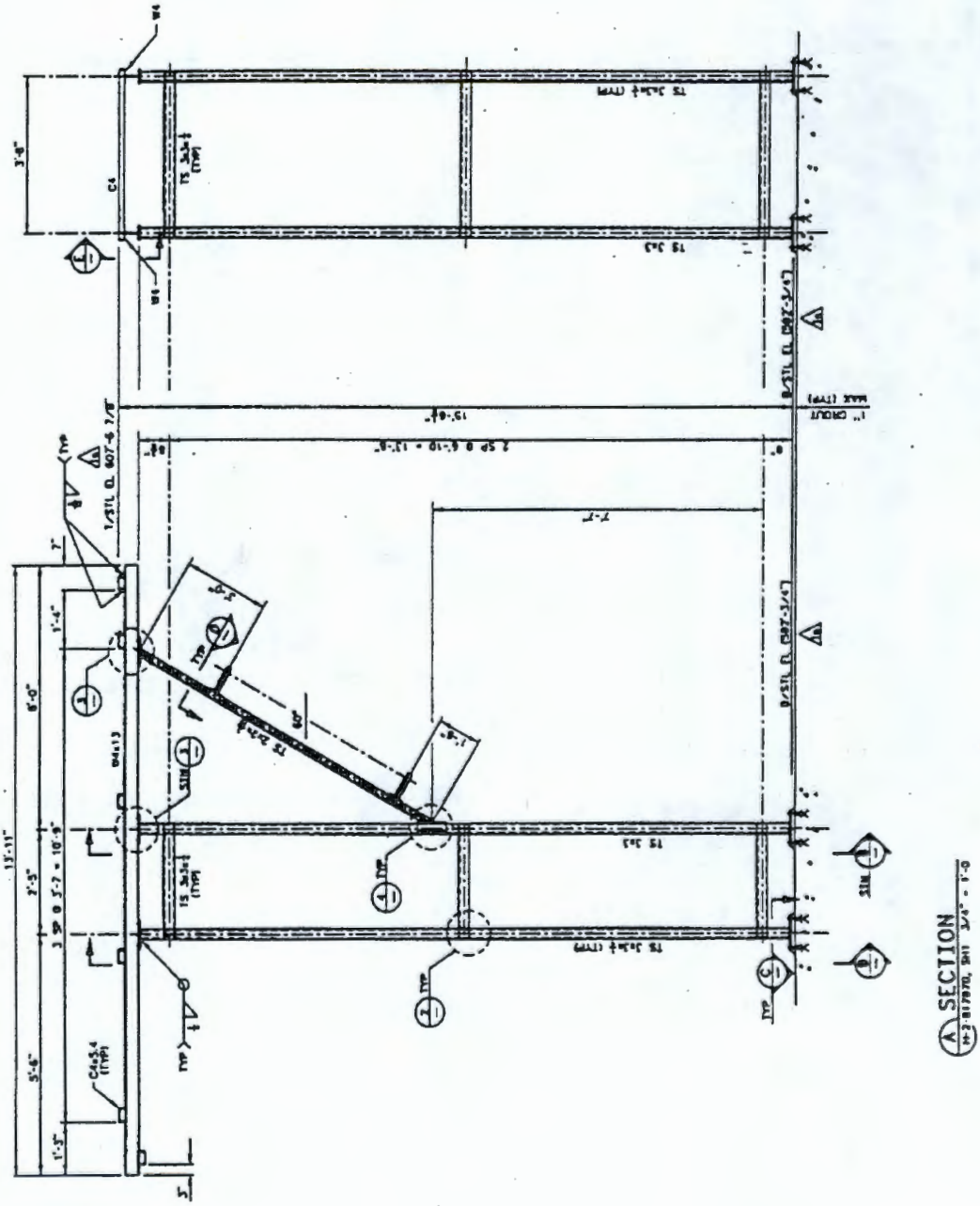

Block 13a Cont'd
H-2-817972 Sh 1 Rev 1
Zones C4–F8
CHANGE TO:

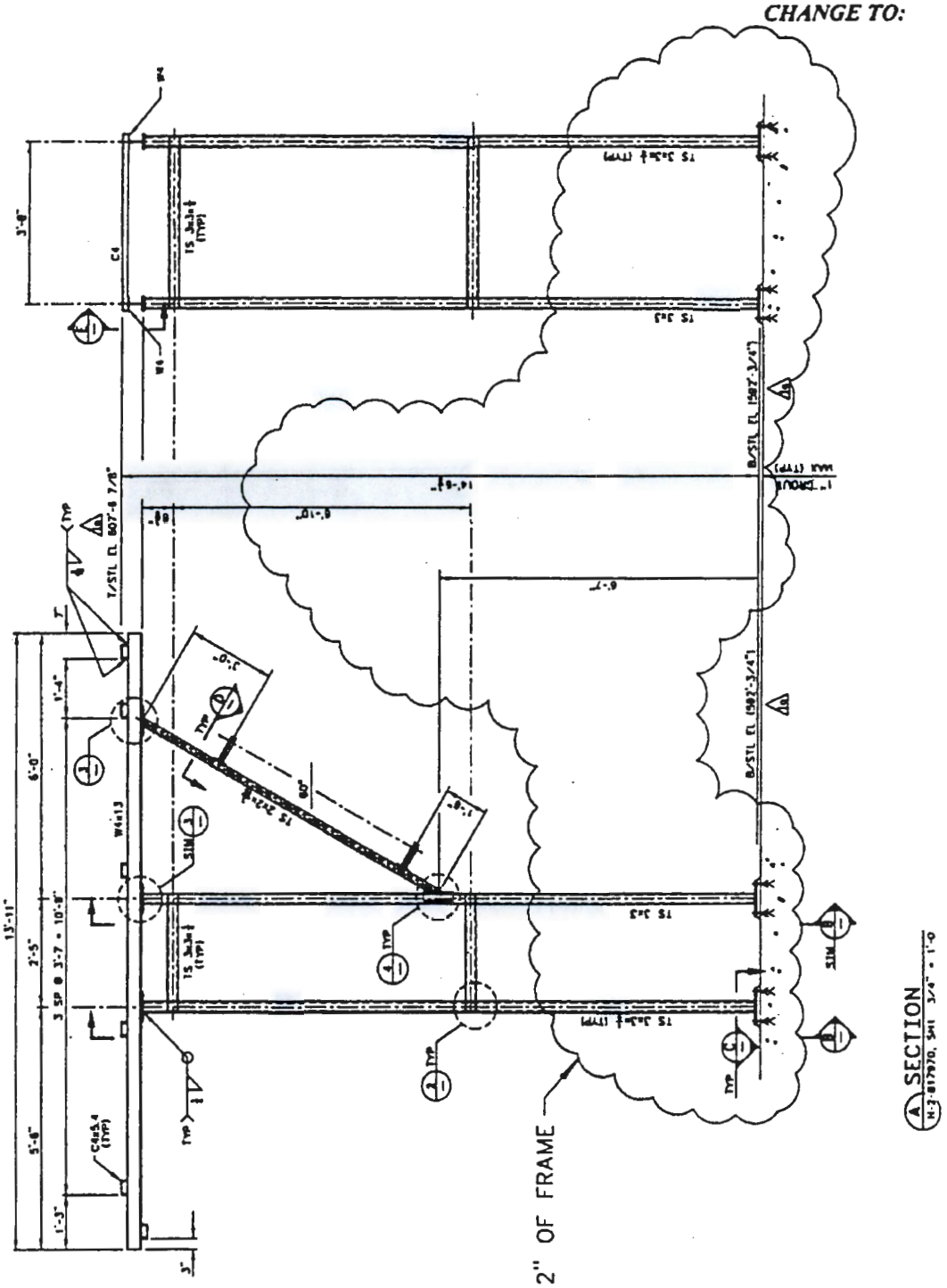

Block 13a Cont'd
H-2-817975 Sh 1 Rev 5
Zones A3–F5
IS NOW:

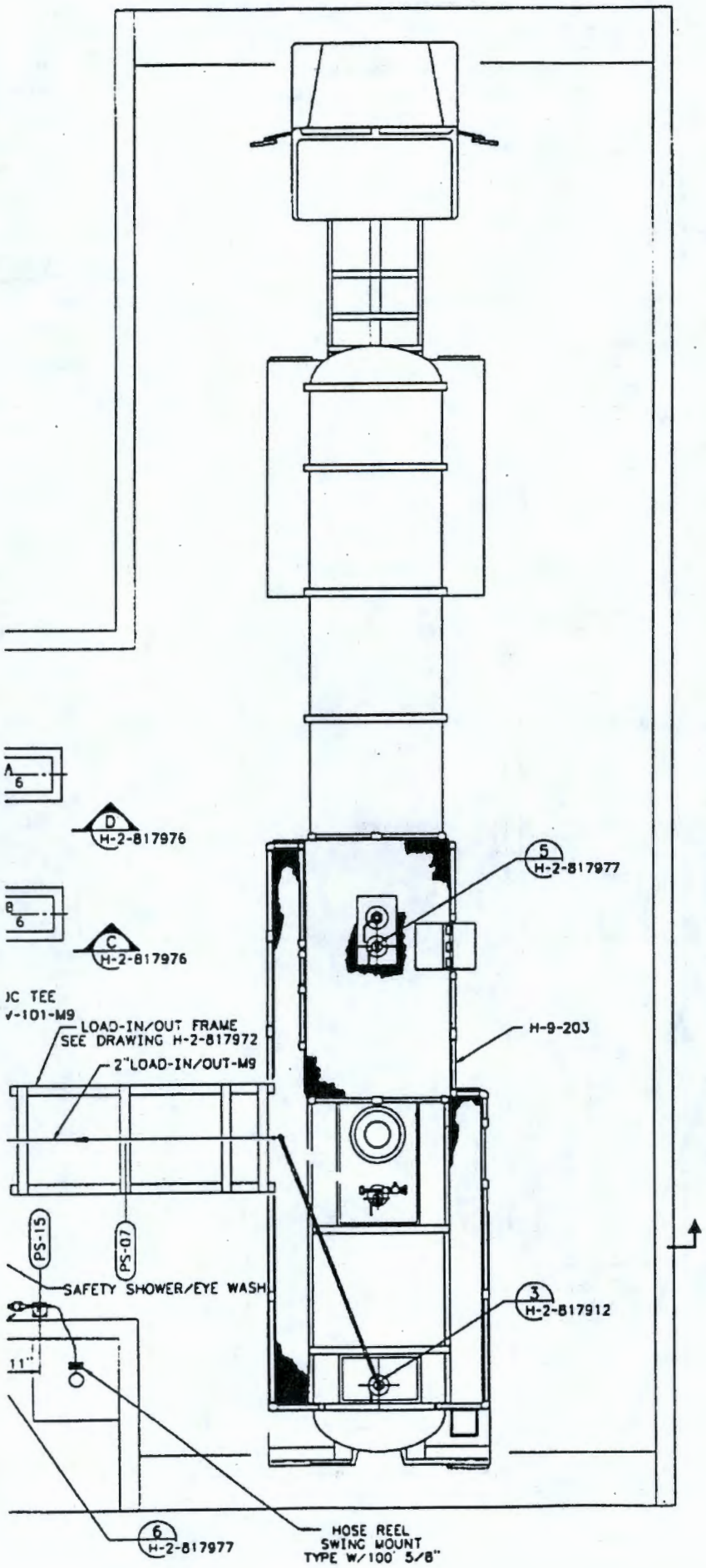

ECN 647247 – 8/27/98
Page 8 of 10
Block 13a Cont'd
H-2-817975 Sh 1 Rev 5
Zones A3–F5
CHANGE TO:

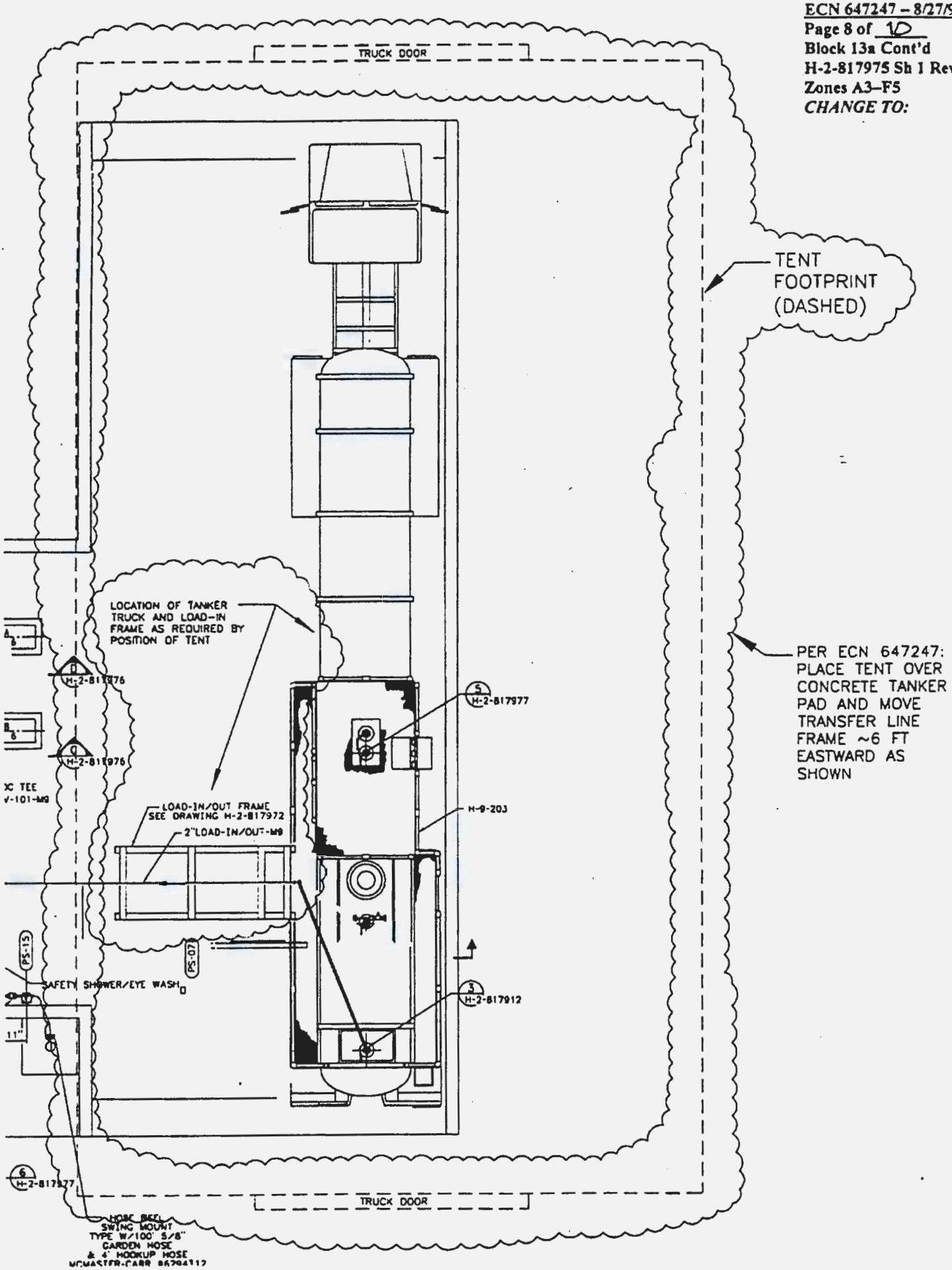

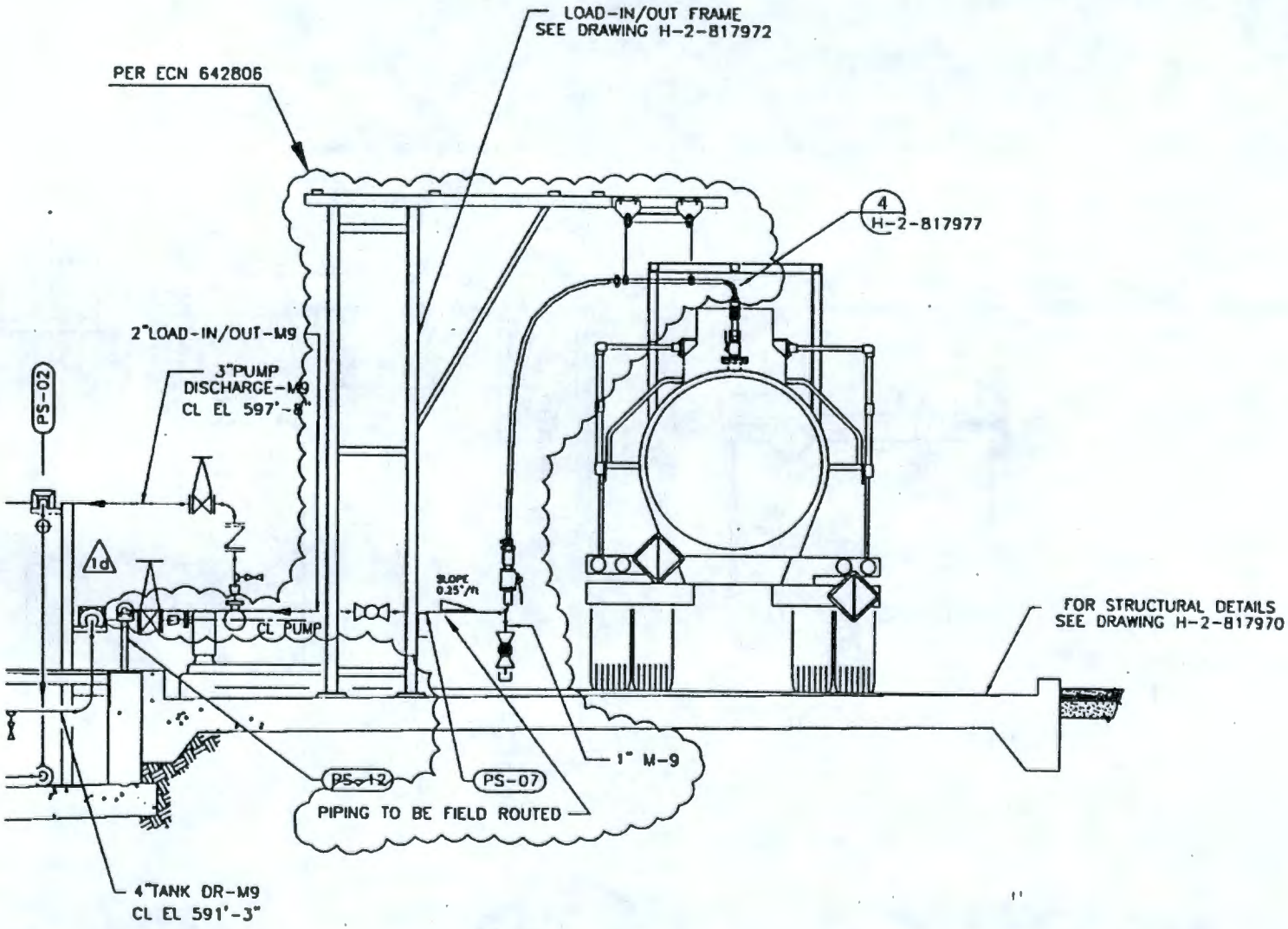

B SECTION
H-2-817975 SCALE: 3/8"=1'-0"

ECN 647247 – 8/27/98
Page 9 of 12
Block 13a Cont'd
H-2-817976 Sh 1 Rev 1
Zones A4–D6
IS NOW:

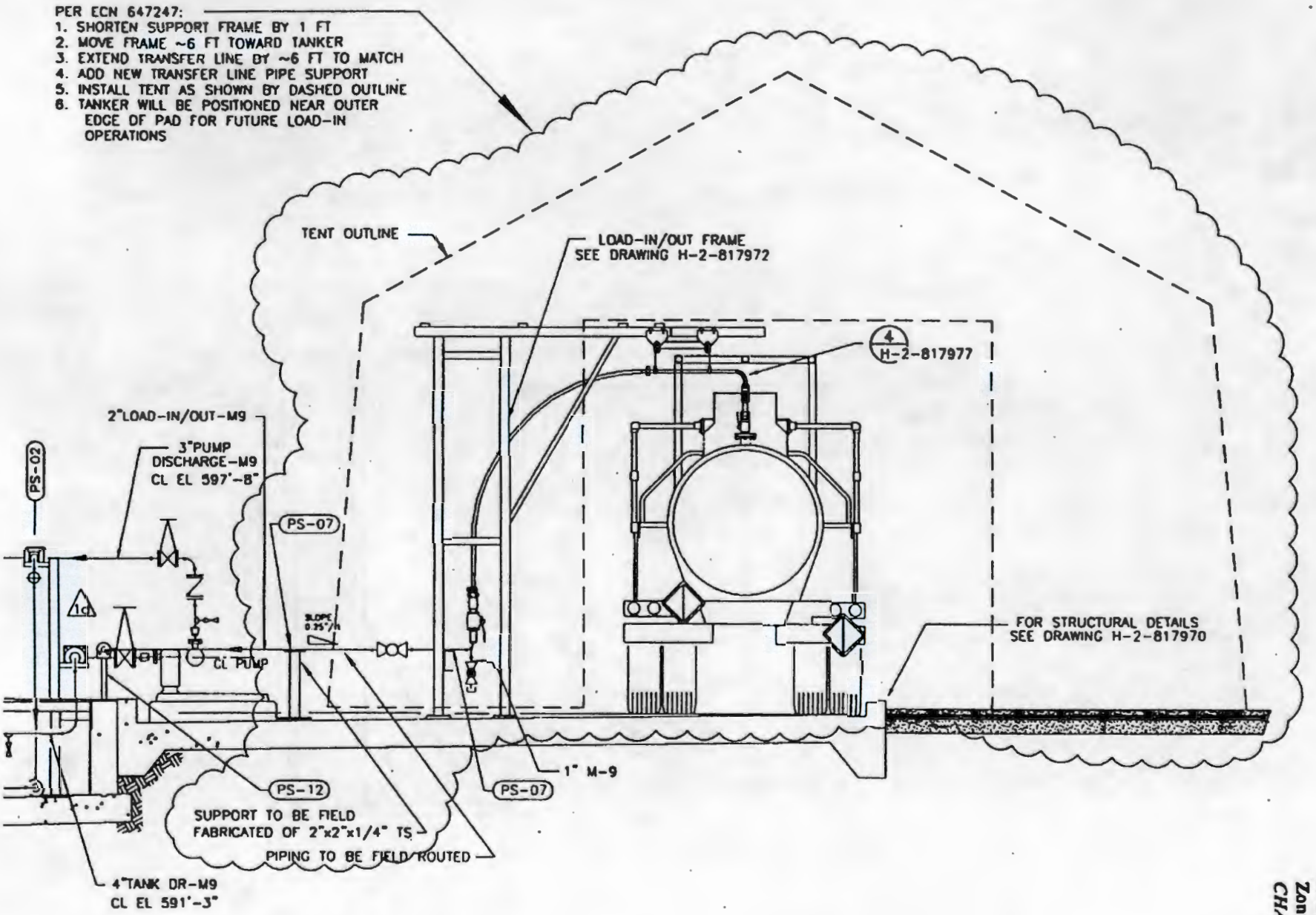

B SECTION
H-2-817975 SCALE: 3/8"=1'-0"

ECN 647247 – 8/27/98
Page 10 of 10
Block 13a Cont'd
H-2-817976 Sh 1 Rev 1
Zones A4–D6
CHANGE TO:

CPF 18

ENGINEERING CHANGE NOTICE

ESSENTIAL

1. ECN 641703

Proj. ECN

2. ECN Category (mark one)	3. Originator's Name, Organization, MSIN, and Telephone No.	4. USQ Required?	5. Date
Supplemental [X] Direct Revision [] Change ECN [] Temporary [] Standby [] Supersedure [] Cancel/Void []	RN Wagner/32200/S6-71/376-4460	[] Yes [X] No	May 13, 1997
	6. Project Title/No./Work Order No. Misc. Mods and As-Builts for ETF Load-In Station	7. Bldg./Sys./Fac. No. 2025E/59A.60M/ .200 Area ETF	8. Approval Designator NA
	9. Document Numbers Changed by this ECN (includes sheet no. and rev.) See Block 13A	10. Related ECN No(s). N/A	11. Related PO No. NA

12a. Modification Work	12b. Work Package No.	12c. Modification Work Complete	12d. Restored to Original Condition (Temp. or Standby ECN only)
[X] Yes (fill out Blk. 12b) [] No (NA Blks. 12b, 12c, 12d)	EL-96-00208. EL-97-00343	Design Authority/Cog. Engineer Signature & Date	NA Design Authority/Cog. Engineer Signature & Date

13a. Description of Change — 13b. Design Baseline Document? [X] Yes [] No

This ECN implements the following changes:

- Remove flow orifice in System 60M transfer line from Load-In Station.
- As-build sample valve and tanker vent valving.
- Add drain lines and valves to Load-In Station pump cases.
- Add bell-reducer funnels and valving to suction of Load-In Station pumps.
- Replace "Facility" with "Station" in all Load-In drawing titles.
- Identify status of Load-In Station drawings to Essential or Support.

Piping, fittings and jointing methods to meet the requirements of Hanford Site piping specification Class M-9. Install, inspect and test the new piping installation in accordance with ASME B31.3 and Addenda for Category D fluid service.

(Block 13a continued on Page 3)

14a. Justification (mark one)

Criteria Change	[]	Design Improvement	[X]	Environmental	[]	Facility Deactivation	[]
As-Found	[X]	Facilitate Const	[]	Const. Error/Omission	[]	Design Error/Omission	[]

14b. Justification Details

- Remove flow orifice in transfer line from Load-In Station to increase flow rate.
- As-build sample valve and tanker vent valving for configuration control.
- Add drain lines and valves to Load-In Station pump cases for improved contamination control.
- Add bell-reducer funnels and valving to allow priming of Load-In Station pumps.
- Replace "Facility" with "Station" in drawing titles to reflect the status of the Load-In Station as part of the 200 Area ETF, rather than a stand-alone facility.
- Identify status of Load-In Station drawings to Essential or Support, as appropriate.

15. Distribution (include name, MSIN, and no. of copies)

N. J. Sullivan	S6-72	1	R. J. Nicklas	S6-72	1
J. E. Geary	S6-71	2	A. K. Yoakum	S6-71	1
R. N. Wagner*	S6-71	2	S. P. Biglin*	S6-74	1
C. M. Towne	S6-74	1	E. A. McNamar*	S6-74	1
J. L. Vigue	S6-74	1	B. S. Darling	S6-72	1
J. F. Berger	S6-74	1	D. P. Nelsen	S6-71	1
T. W. Dallas	S6-71	1	Stations 3/4/5/15/16/30		

(* Advance Copies)

RELEASE STAMP

DATE: MAY 27 1997 HANFORD RELEASE

TOTAL 30 FOR 25

A-7900-013-2 (05/96) GEF095

ENGINEERING CHANGE NOTICE

1. ECN (use no. from pg. 1): 641703

16. Design Verification Required	17. Cost Impact				18. Schedule Impact (days)	
	ENGINEERING	NA	CONSTRUCTION		NA	
[X] Yes	Additional	[] $	Additional	[] $	Improvement	[]
[] No	Savings	[] $	Savings	[] $	Delay	[]

19. Change Impact Review: Indicate the related documents (other than the engineering documents identified on Side 1) that will be affected by the change described in Block 13. Enter the affected document number in Block 20.

SDD/DD	[]	Seismic/Stress Analysis	[]	Tank Calibration Manual	[]
Functional Design Criteria	[]	Stress/Design Report	[]	Health Physics Procedure	[]
Operating Specification	[]	Interface Control Drawing	[]	Spares Multiple Unit Listing	[]
Criticality Specification	[]	Calibration Procedure	[]	Test Procedures/Specification	[]
Conceptual Design Report	[]	Installation Procedure	[]	Component Index	[X]
Equipment Spec.	[]	Maintenance Procedure	[]	ASME Coded Item	[]
Const. Spec.	[]	Engineering Procedure	[]	Human Factor Consideration	[]
Procurement Spec.	[]	Operating Instruction	[]	Computer Software	[]
Vendor Information	[X]	Operating Procedure	[]	Electric Circuit Schedule	[]
OM Manual	[]	Operational Safety Requirement	[]	ICRS Procedure	[]
FSAR/SAR	[]	IEFD Drawing	[]	Process Control Manual/Plan	[]
Safety Equipment List	[]	Cell Arrangement Drawing	[]	Process Flow Chart	[]
Radiation Work Permit	[]	Essential Material Specification	[]	Purchase Requisition	[]
Environmental Impact Statement	[]	Fac. Proc. Samp. Schedule	[]	Tickler File	[]
Environmental Report	[]	Inspection Plan	[]		[]
Environmental Permit	[]	Inventory Adjustment Request	[]		[]

20. Other Affected Documents: (NOTE: Documents listed below will not be revised by this ECN.) Signatures below indicate that the signing organization has been notified of other affected documents listed below.

Document Number/Revision	Document Number/Revision	Document Number Revision
JCS Database (Component Index)		

21. Approvals

	Signature	Date		Signature	Date
Design Authority	- R. N. Wagner	5/23/97	Design Agent		
Cog. Eng.	- R. N. Wagner	5/23/97	PE		
Cog. Mgr.	- R. J. Nicklas FOR	5-23-97	QA		
QA			Safety		
Safety			Design		
Environ.			Environ.		
Other			Other		

DEPARTMENT OF ENERGY

Signature or a Control Number that tracks the Approval Signature

ADDITIONAL

Documents changed by this ECN (also see attached drawing changes):

H-2-88766, Sheet 4, Rev. 2
H-2-88779, Sheet 4, Rev. 0
H-9-203, Sheet 1, Rev. 0
H-9-203, Sheet 4, Rev. 0
H-2-817968, Sheet 1, Rev. 1*
H-2-817969, Sheet 1, Rev. 1*
H-2-817969, Sheet 2, Rev. 1*
H-2-817969, Sheet 3, Rev. 1*
H-2-817969, Sheet 4, Rev. 1*
H-2-817969, Sheet 5, Rev. 1*
H-2-817970, Sheet 1, Rev. 1*
H-2-817970, Sheet 2, Rev. 1*
H-2-817971, Sheet 1, Rev. 1*
H-2-817971, Sheet 2, Rev. 1*
H-2-817972, Sheet 1, Rev. 1*
H-2-817973, Sheet 1, Rev. 1*
H-2-817974, Sheet 1, Rev. 2*
H-2-817975, Sheet 1, Rev. 1*
H-2-817976, Sheet 1, Rev. 1*
H-2-817977, Sheet 1, Rev. 1*
H-2-817978, Sheet 1, Rev. 1*
H-2-817980, Sheet 1, Rev. 1*
H-2-817981, Sheet 1, Rev. 1*
H-2-817981, Sheet 2, Rev. 1*
H-2-817981, Sheet 3, Rev. 1*
H-2-817981, Sheet 4, Rev. 1*
H-2-817981, Sheet 5, Rev. 1*
H-2-817983, Sheet 1, Rev. 0*
H-2-817983, Sheet 2, Rev. 1*
H-2-817983, Sheet 3, Rev. 0*
H-2-817983, Sheet 4, Rev. 1*
H-2-817983, Sheet 5, Rev. 0*
H-2-817983, Sheet 6, Rev. 1*
H-2-817983, Sheet 7, Rev. 0*
H-2-817983, Sheet 8, Rev. 0*
H-2-817985, Sheet 1, Rev. 1*
H-2-817985, Sheet 2, Rev. 1*
H-2-817987, Sheet 1, Rev. 1*
H-2-817987, Sheet 3, Rev. 1*
H-2-817987, Sheet 4, Rev. 1*
H-2-817988, Sheet 1, Rev. 1*
H-2-817988, Sheet 2, Rev. 1*
H-2-817988, Sheet 3, Rev. 1*
H-2-817989, Sheet 1, Rev. 1*
H-2-817990, Sheet 1, Rev. 1*
H-2-817991, Sheet 2, Rev. 1*

(* Title and/or Essential/Support status is changed for these drawings per this ECN.)

H-2-88766, Sheet 4, Rev. 2, Zone D-2

IS:

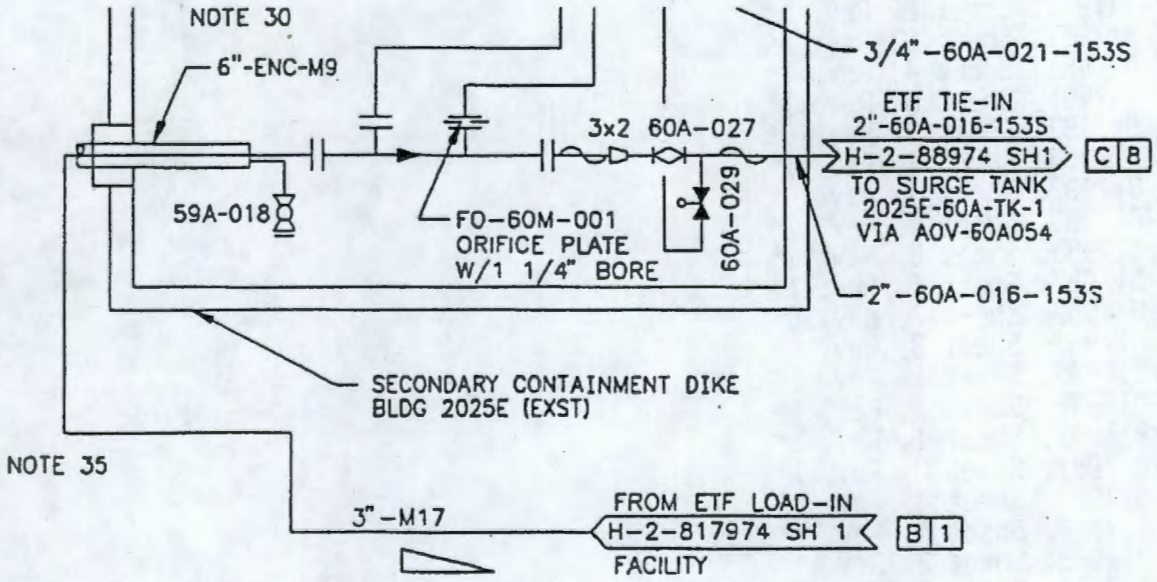

H-2-88766, Sheet 4, Rev. 2, Zone D-2

CHANGE TO:

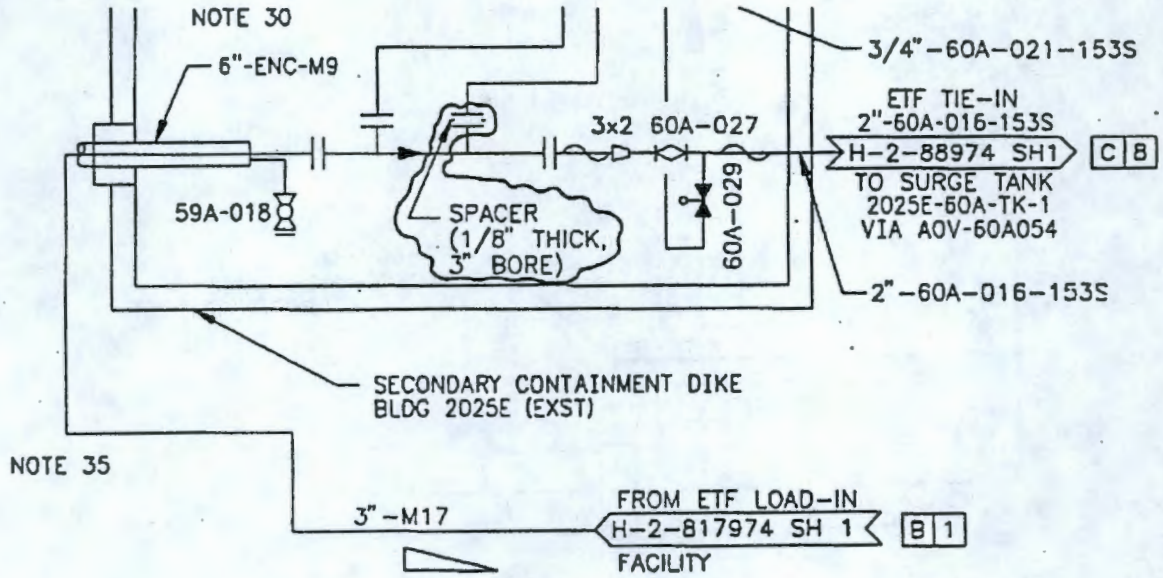

H-2-88779, Sheet 4, Rev. 0, Zone B-2

IS:

B/1 SECTION
SCALE: 3/4" = 1'-0"

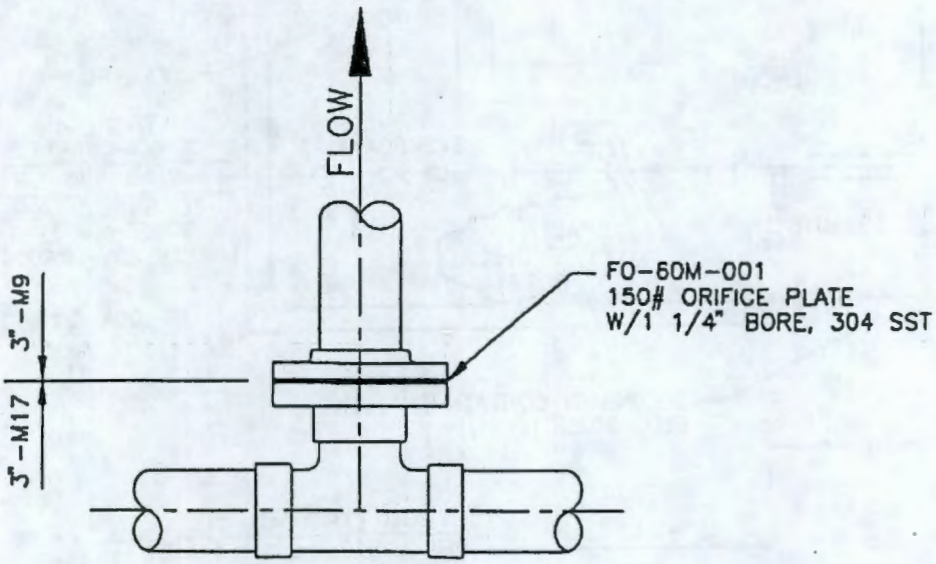

6/1 DETAIL
SCALE: 3/16 SIZE

H-2-88779, Sheet 4, Rev. 0, Zone B-2

CHANGE TO:

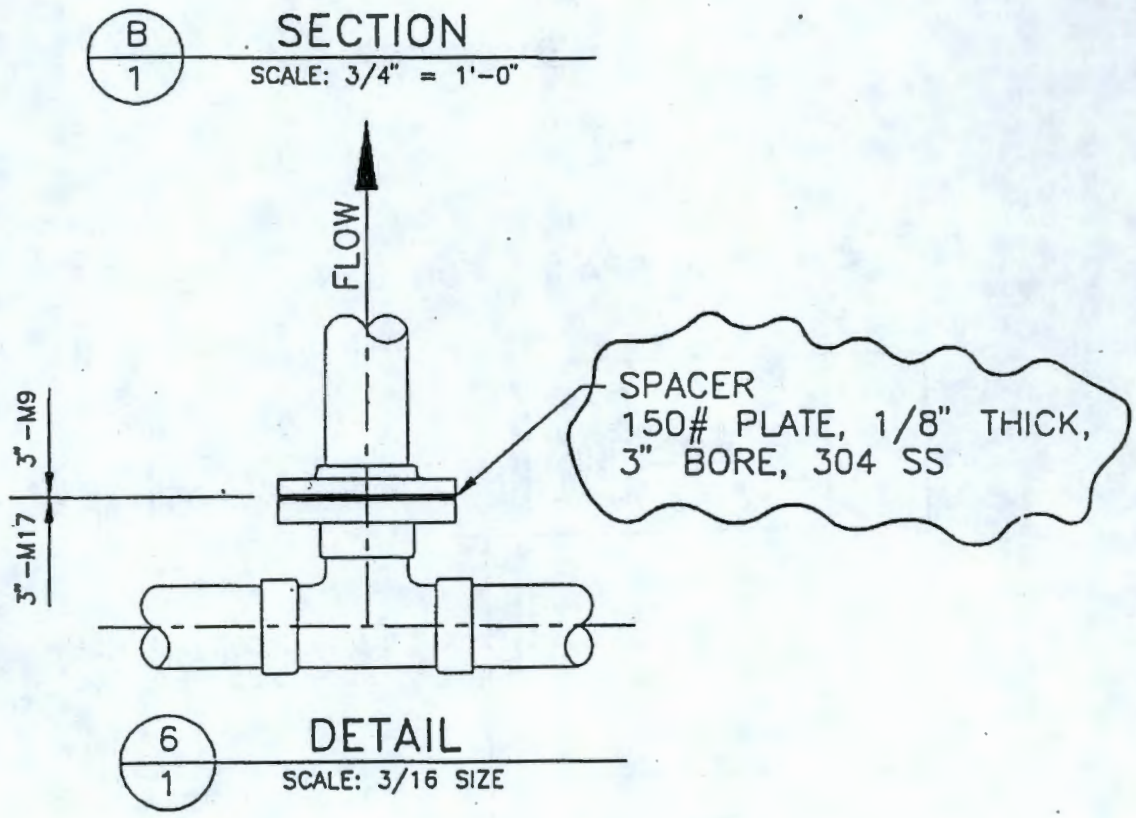

Sketch for 3" spacer shown in above changes to H-2-88779 and H-2-88766

3" FLANGE SPACER FOR ECN 641703

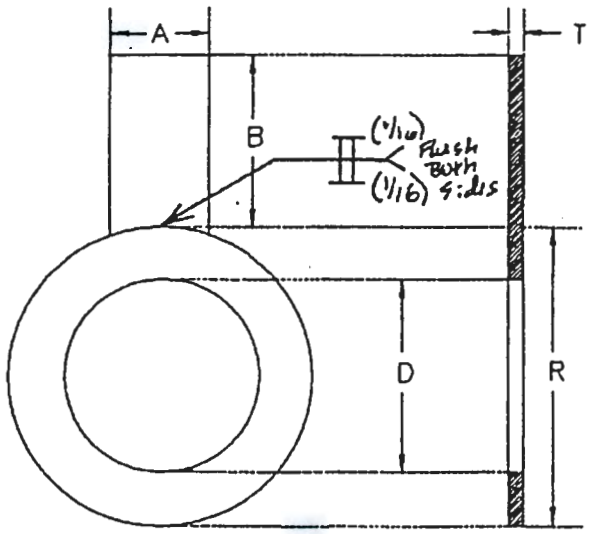

T = 1/8" PLATE THICKNESS

A = 2" (APPROX)
B = 3" (APPROX)

D = 3.00" +/- .05"
R = 5.25" +/- .05"

MATERIAL = 304SS
FLANGE CLASS = 150 LB

H-2-817974, Sheet 1, Rev. 2, Zone C-5

IS:

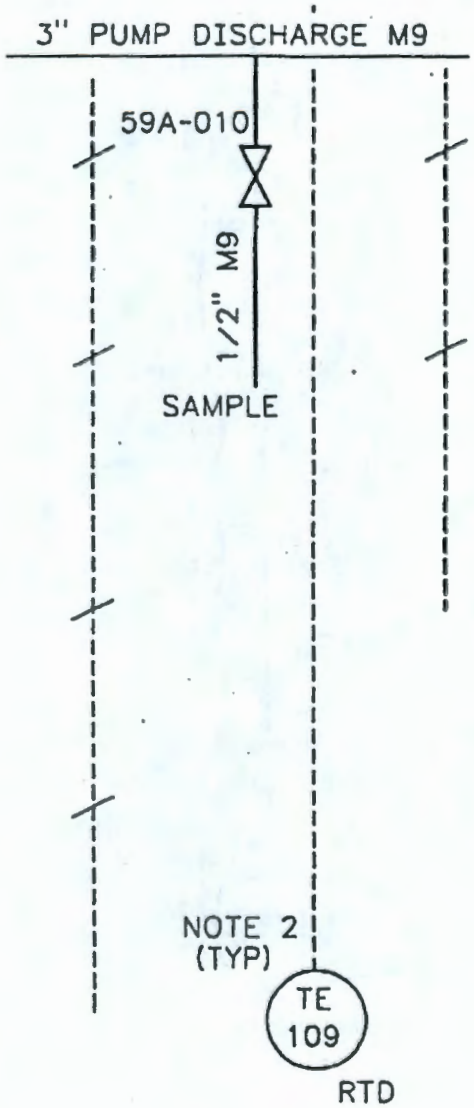

H-2-817974, Sheet 1, Rev. 2, Zone C-5

CHANGE TO:

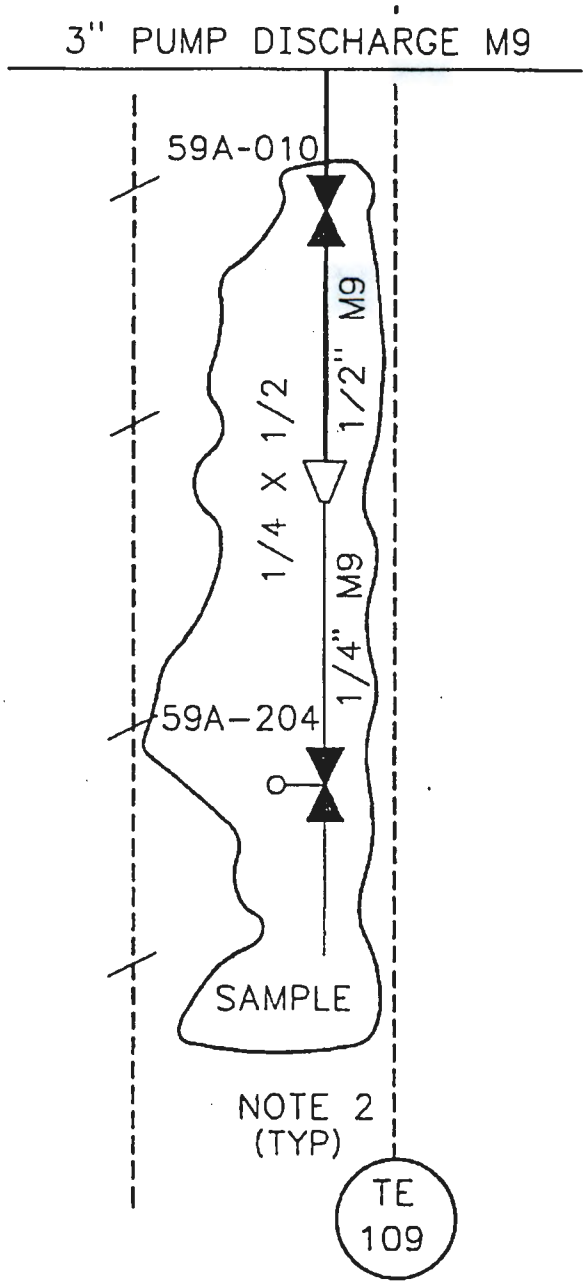

H-2-817974, Sheet 1, Rev. 2, Zone C-7 to D-7

IS:

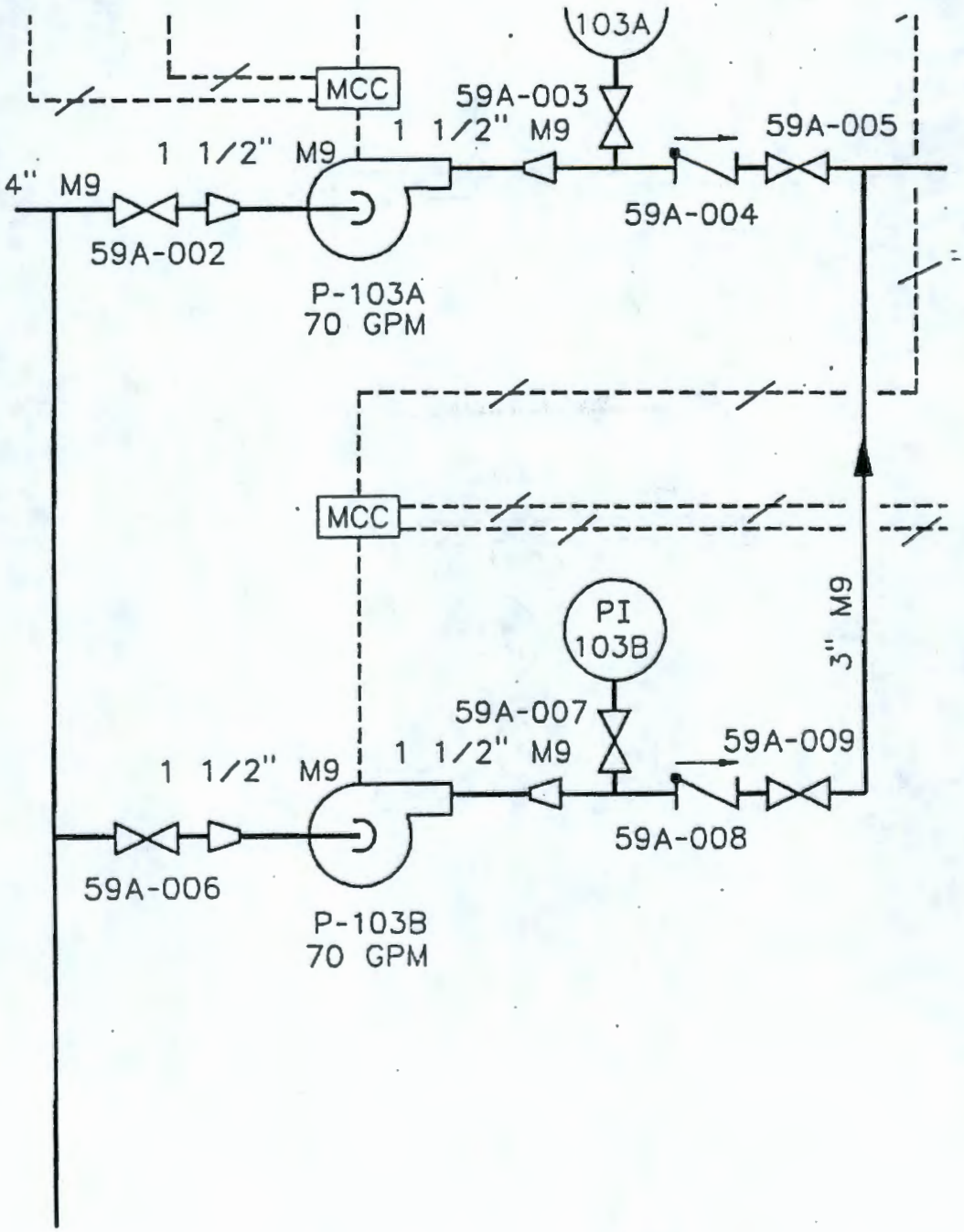

H-2-817974, Sheet 1, Rev. 2, Zone C-7 to D-7

CHANGE TO:

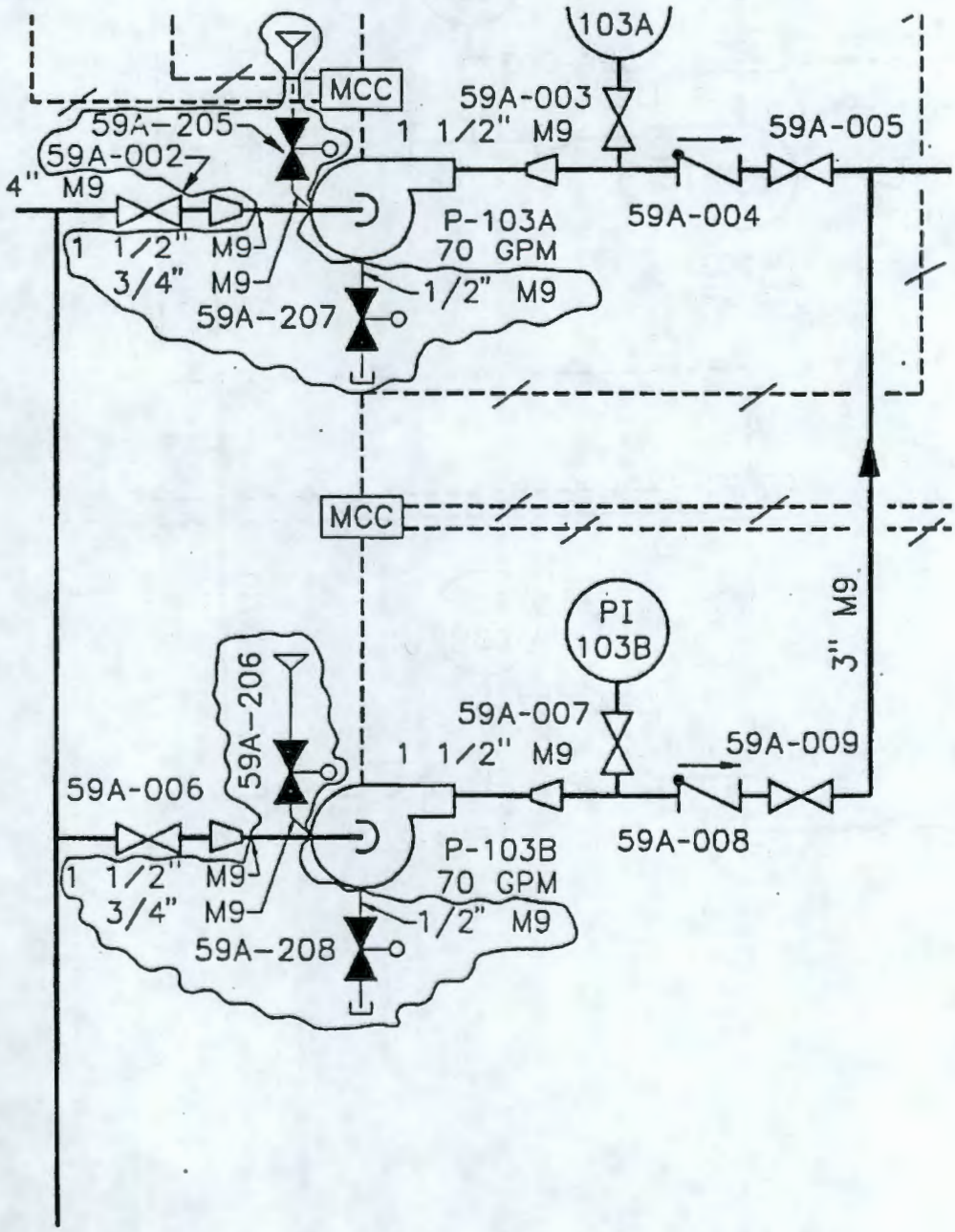

H-9-203, Sheet 1, Rev. 0, Zone E-6

IS:

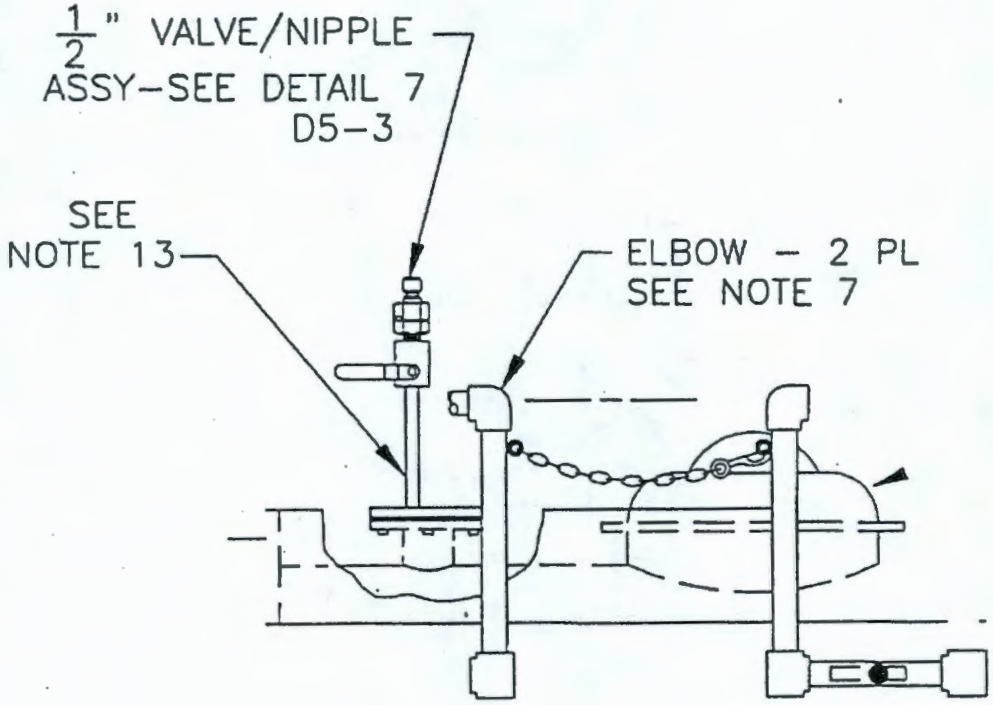

H-9-203, Sheet 1, Rev. 0, Zone E-6

CHANGE TO:

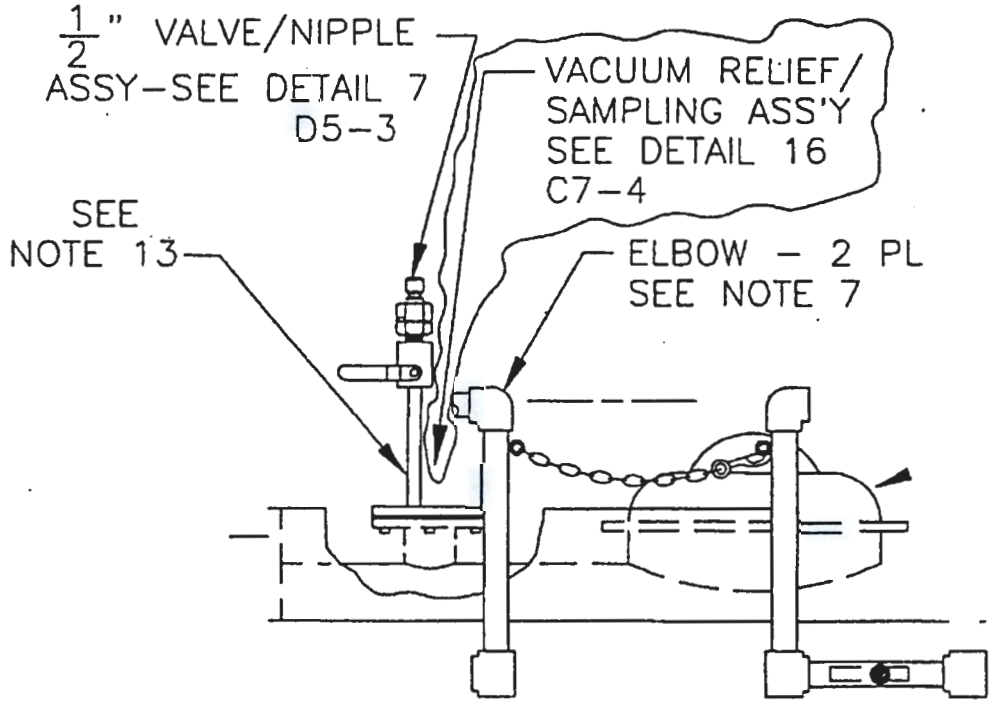

H-9-203, Sheet 4, Rev. 0, Zone D-7.

IS:

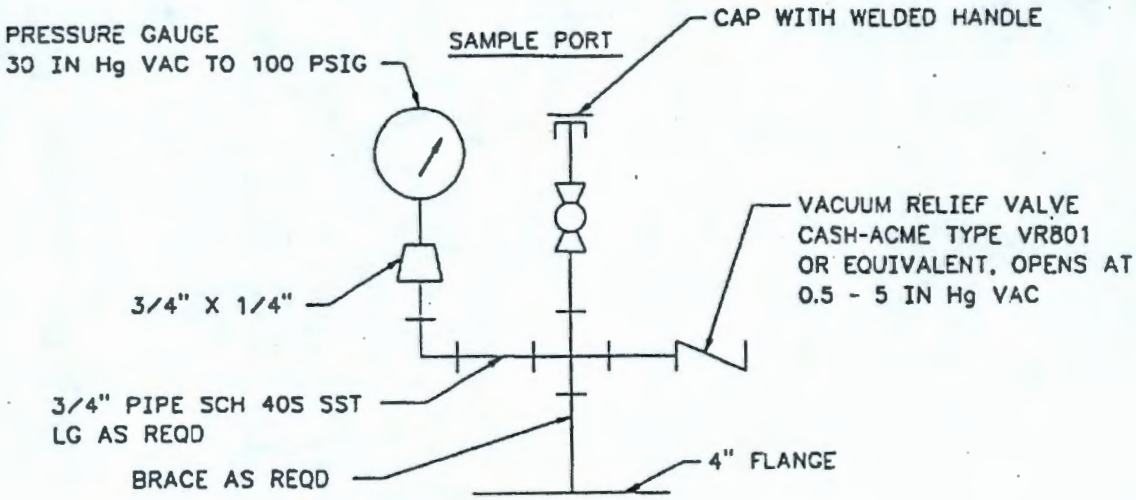

DETAIL 16 C6-2

SCALE: NONE

H-9-203, Sheet 4, Rev. 0, Zone D-7

CHANGE TO:

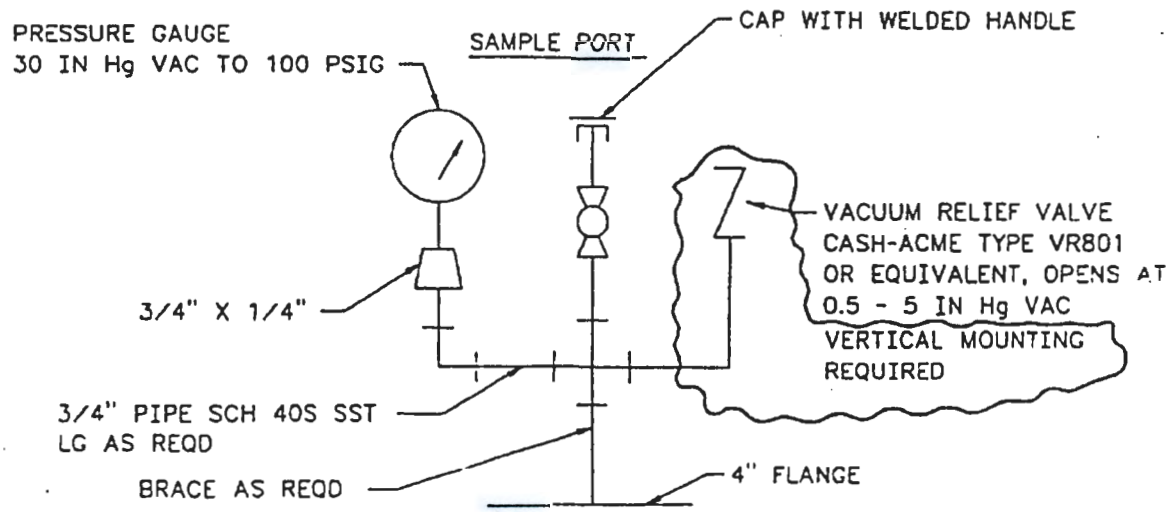

DETAIL 16 C6-2, E6-1

SCALE: NONE

H-2-817968, Sheet 1, Rev. 1, Title

IS: ETF TRUCK LOAD-IN FACILITY LOCATION PLAN & DWG LIST

CHANGE TO: ETF TRUCK LOAD-IN STATION LOCATION PLAN & DWG LIST

Drawing Status: ESSENTIAL

H-2-817969, Sheet 1, Rev. 1, Title

IS: CIVIL ETF TRUCK LOAD-IN FACILITY SITE PLAN

CHANGE TO: CIVIL ETF TRUCK LOAD-IN STATION SITE PLAN

Drawing Status: SUPPORT

H-2-817969, Sheet 2, Rev. 1, Title

IS: CIVIL ETF TRUCK LOAD-IN FACILITY PLAN AND PROFILES

CHANGE TO: CIVIL ETF TRUCK LOAD-IN STATION PLAN AND PROFILES

Drawing Status: SUPPORT

H-2-817969, Sheet 3, Rev. 1, Title

IS: CIVIL ETF TRUCK LOAD-IN FACILITY ENLARGED PLAN

CHANGE TO: CIVIL ETF TRUCK LOAD-IN STATION ENLARGED PLAN

Drawing Status: SUPPORT

H-2-817969, Sheet 4, Rev. 1, Title

IS: CIVIL ETF TRUCK LOAD-IN FACILITY MISCELLANEOUS DETAILS

CHANGE TO: CIVIL ETF TRUCK LOAD-IN STATION MISCELLANEOUS DETAILS

Drawing Status: SUPPORT

H-2-817969, Sheet 5, Rev. 1, Title

IS: CIVIL ETF TRUCK LOAD-IN FACILITY MISCELLANEOUS DETAILS

CHANGE TO: CIVIL ETF TRUCK LOAD-IN STATION MISCELLANEOUS DETAILS

Drawing Status: SUPPORT

H-2-817970, Sheet 1, Rev. 1, Title

IS: STRUCTURAL ETF TRUCK LOAD-IN FACILITY PLAN AND SECTIONS

CHANGE TO: STRUCTURAL ETF TRUCK LOAD-IN STATION PLAN AND SECTIONS

Drawing Status: SUPPORT

H-2-817970, Sheet 2, Rev. 1, Title

IS: STRUCTURAL ETF TRUCK LOAD-IN FACILITY SECTIONS AND DETAILS

CHANGE TO: STRUCTURAL ETF TRUCK LOAD-IN STATION SECTIONS AND DETAILS

Drawing Status: SUPPORT

H-2-817971, Sheet 1, Rev. 1, Title

IS: STRUCTURAL ETF TRUCK LOAD-IN FACILITY STEEL PLAN & SECTIONS

CHANGE TO: STRUCTURAL ETF TRUCK LOAD-IN STATION STEEL PLAN & SECTIONS

Drawing Status: SUPPORT

H-2-817971, Sheet 2, Rev. 1, Title

IS: STRUCTURAL ETF TRUCK LOAD-IN FACILITY STEEL DETAILS

CHANGE TO: STRUCTURAL ETF TRUCK LOAD-IN STATION STEEL DETAILS

Drawing Status: SUPPORT

H-2-817972, Sheet 1, Rev. 1, Title

IS: STRUCTURAL ETF TRUCK LOAD-IN FACILITY SECTIONS AND DETAILS

CHANGE TO: STRUCTURAL ETF TRUCK LOAD-IN STATION SECTIONS AND DETAILS

Drawing Status: SUPPORT

H-2-817973, Sheet 1, Rev. 1, Title

IS: STRUCTURAL ETF TRUCK LOAD-IN FACILITY MISC SECTIONS AND DETAILS

CHANGE TO: STRUCTURAL ETF TRUCK LOAD-IN STATION MISC SECTIONS AND DETAILS

Drawing Status: SUPPORT

H-2-817974, Sheet 1, Rev. 2, Title

IS: P & ID ETF TRUCK LOAD-IN FACILITY

CHANGE TO: P & ID ETF TRUCK LOAD-IN STATION

Drawing Status: ESSENTIAL

H-2-817975, Sheet 1, Rev. 1, Title

IS: PIPING ETF TRUCK LOAD-IN FACILITY PLAN

CHANGE TO: PIPING ETF TRUCK LOAD-IN STATION PLAN

Drawing Status: ESSENTIAL

H-2-817976, Sheet 1, Rev. 1, Title

IS: PIPING ETF TRUCK LOAD-IN FACILITY SECTIONS AND DETAILS

CHANGE TO: PIPING ETF TRUCK LOAD-IN STATION SECTIONS AND DETAILS

Drawing Status: SUPPORT

H-2-817977, Sheet 1, Rev. 1, Title

IS: PIPING ETF TRUCK LOAD-IN FACILITY DETAILS

CHANGE TO: PIPING ETF TRUCK LOAD-IN STATION DETAILS

Drawing Status: SUPPORT

H-2-817978, Sheet 1, Rev. 1, Title

IS: PIPING ETF TRUCK LOAD-IN FACILITY PIPE SUPPORTS

CHANGE TO: PIPING ETF TRUCK LOAD-IN STATION PIPE SUPPORTS

Drawing Status: SUPPORT

H-2-817980, Sheet 1, Rev. 1, Title

IS: INSTRUMENTATION ETF TRUCK LOAD-IN FACILITY LEGEND & SYMBOLS

CHANGE TO: INSTRUMENTATION ETF TRUCK LOAD-IN STATION LEGEND & SYMBOLS

Drawing Status: SUPPORT

H-2-817981, Sheet 1, Rev. 1, Title

IS: INSTRUMENTATION ETF TRUCK LOAD-IN FACILITY LOOP DIAGRAM

CHANGE TO: INSTRUMENTATION ETF TRUCK LOAD-IN STATION LOOP DIAGRAM

Drawing Status: SUPPORT

H-2-817981, Sheet 2, Rev. 1, Title

IS: INSTRUMENTATION ETF TRUCK LOAD-IN FACILITY LOOP DIAGRAM

CHANGE TO: INSTRUMENTATION ETF TRUCK LOAD-IN STATION LOOP DIAGRAM

Drawing Status: SUPPORT

H-2-817981, Sheet 3, Rev. 1, Title

IS: INSTRUMENTATION ETF TRUCK LOAD-IN FACILITY LOOP DIAGRAM

CHANGE TO: INSTRUMENTATION ETF TRUCK LOAD-IN STATION LOOP DIAGRAM

Drawing Status: SUPPORT

H-2-817981, Sheet 4, Rev. 1, Title

IS: INSTRUMENTATION ETF TRUCK LOAD-IN FACILITY LOOP DIAGRAM

CHANGE TO: INSTRUMENTATION ETF TRUCK LOAD-IN STATION LOOP DIAGRAM

Drawing Status: SUPPORT

H-2-817981, Sheet 5, Rev. 1, Title

IS: INSTRUMENTATION ETF TRUCK LOAD-IN FACILITY LOOP DIAGRAM

CHANGE TO: INSTRUMENTATION ETF TRUCK LOAD-IN STATION LOOP DIAGRAM

Drawing Status: SUPPORT

H-2-817983, Sheet 1, Rev. 0, Title

CHANGE TO: Drawing Status: SUPPORT

H-2-817983, Sheet 2, Rev. 1, Title

CHANGE TO: Drawing Status: SUPPORT

H-2-817983, Sheet 3, Rev. 0, Title

CHANGE TO: Drawing Status: SUPPORT

H-2-817983, Sheet 4, Rev. 1, Title

CHANGE TO: Drawing Status: SUPPORT

H-2-817983, Sheet 5, Rev. 0, Title

CHANGE TO: Drawing Status: SUPPORT

H-2-817983, Sheet 6, Rev. 1, Title

CHANGE TO: Drawing Status: SUPPORT

H-2-817983, Sheet 7, Rev. 0, Title

CHANGE TO: Drawing Status: SUPPORT

H-2-817983, Sheet 8, Rev. 0, Title

CHANGE TO: Drawing Status: SUPPORT

H-2-817985, Sheet 1, Rev. 1, Title

IS: INSTRUMENTATION ETF TRUCK LOAD-IN FACILITY SECTIONS AND DETAILS

CHANGE TO: INSTRUMENTATION ETF TRUCK LOAD-IN STATION SECTIONS AND DETAILS

Drawing Status: SUPPORT

H-2-817985, Sheet 2, Rev. 1, Title

IS: INSTRUMENTATION ETF TRUCK LOAD-IN FACILITY SECTIONS AND DETAILS

CHANGE TO: INSTRUMENTATION ETF TRUCK LOAD-IN STATION SECTIONS AND DETAILS

Drawing Status: SUPPORT

H-2-817987, Sheet 1, Rev. 1, Title

IS: ELECTRICAL ETF TRUCK LOAD-IN FACILITY SITE PLAN

CHANGE TO: ELECTRICAL ETF TRUCK LOAD-IN STATION SITE PLAN

Drawing Status: SUPPORT

H-2-817987, Sheet 3, Rev. 1, Title

IS: ELECTRICAL ETF TRUCK LOAD-IN FACILITY SECTIONS & DETAILS

CHANGE TO: ELECTRICAL ETF TRUCK LOAD-IN STATION SECTIONS & DETAILS

Drawing Status: SUPPORT

H-2-817990, Sheet 1, Rev. 1, Title

IS: ELECTRICAL ETF TRUCK LOAD-IN FACILITY WIRE & CONDUIT SCHEDULE

CHANGE TO: ELECTRICAL ETF TRUCK LOAD-IN STATION WIRE & CONDUIT SCHEDULE

Drawing Status: ESSENTIAL

H-2-817991, Sheet 2, Rev. 1, Title

IS: ELECTRICAL ETF TRUCK LOAD-IN FACILITY TELECOMMUNICATIONS

CHANGE TO: ELECTRICAL ETF TRUCK LOAD-IN STATION TELECOMMUNICATIONS

Drawing Status: SUPPORT

H-2-817987, Sheet 4, Rev. 1, Title

IS: ELECTRICAL ETF TRUCK LOAD-IN FACILITY SECTIONS & DETAILS

CHANGE TO: ELECTRICAL ETF TRUCK LOAD-IN STATION SECTIONS & DETAILS

Drawing Status: SUPPORT

H-2-817988, Sheet 1, Rev. 1, Title

IS: ELECTRICAL ETF TRUCK LOAD-IN FACILITY PLAN, ONE-LINE & DETAILS

CHANGE TO: ELECTRICAL ETF TRUCK LOAD-IN STATION PLAN, ONE-LINE & DETAILS

Drawing Status: ESSENTIAL

H-2-817988, Sheet 2, Rev. 1, Title

IS: ELECTRICAL ETF TRUCK LOAD-IN FACILITY PLAN, GND & HEAT TRACING

CHANGE TO: ELECTRICAL ETF TRUCK LOAD-IN STATION PLAN, GND & HEAT TRACING

Drawing Status: ESSENTIAL

H-2-817988, Sheet 3, Rev. 1, Title

IS: ELECTRICAL ETF TRUCK LOAD-IN FACILITY PANEL SCHEDULE & DETAILS

CHANGE TO: ELECTRICAL ETF TRUCK LOAD-IN STATION PANEL SCHEDULE & DETAILS

Drawing Status: ESSENTIAL

H-2-817989, Sheet 1, Rev. 1, Title

IS: ELECTRICAL ETF TRUCK LOAD-IN FACILITY ELEMENTARY DIAGRAM

CHANGE TO: ELECTRICAL ETF TRUCK LOAD-IN STATION ELEMENTARY DIAGRAM

Drawing Status: ESSENTIAL

Index

Table 4B-2.
Drawings of Major Process Units and Tanks at the Effluent Treatment Facility and Load-In Station

ETF Process Unit	Drawing Number	Outstanding ECNs
Load-In Facility	H-2-817974, Sh 1, Rev. 9	ECN-647201L ECN-642820L ECN-647247 ECN-649112 ECN-649116
Surge Tank	H-2-89337, Sh 1, Rev. 10	ECN-649101
UV/Oxidation	H-2-88976, Sh 1, Rev. 6	ECN-646667L ECN-647245
UV/Oxidation	H-2-89342, Sh 1, Rev. 6	ECN-647245
Reverse Osmosis	H-2-88980, Sh 1, Rev. 8	None
Reverse Osmosis	H-2-88982, Sh 1, Rev. 10	None
IX/Polishers	H-2-88983, Sh 1, Rev. 8	ECN-642800
Verification Tanks	H-2-88985, Sh 1, Rev. 8	None
ETF Evaporator	H-2-89335, Sh 1, Rev. 11	ECN-646658L ECN-641719
Thin Film Dryer	H-2-88989, Sh 1, Rev. 13	ECN-648765 ECN-646670 ECN-646672 ECN-642797
Transfer Piping from LERF to ETF	H-2-88768, Sh 1, Rev. 1	None
Transfer Piping from Load-In Facility to ETF	H-2-817969, Sh 1, Rev. 1	W291-015 ECN-641703

S

CPF 18

ENGINEERING CHANGE NOTICE ESSENTIAL

1. ECN 647201L

Proj. ECN

2. ECN Category (mark one)	3. Originator's Name, Organization, MSIN, and Telephone No.	4. USQ Required?	5. Date
Supplemental [] Direct Revision [] Change ECN [] Temporary [X] Standby [] Supersedure [X] Cancel/Void []	RN Wagner/32230/S6-72/376-4460	[] Yes [X] No	October 27, 1998
	6. Project Title/No./Work Order No. Install Temporary Filter in Load-In Sump Line/Charge # 101709, COA B000	7. Bldg./Sys./Fac. No. 2025EC/59A/ 200 Area ETF	8. Approval Designator NA
	9. Document Numbers Changed by this ECN (includes sheet no. and rev.) See Block 13	10. Related ECN No(s). 647250L	11. Related PO No. NA

12a. Modification Work	12b. Work Package No.	12c. Modification Work Complete	12d. Restored to Original Condition (Temp. or Standby ECN only)
[X] Yes (fill out Blk. 12b) [] No (NA Blks. 12b, 12c, 12d)	EL-98-00714	Design Authority/Cog. Engineer Signature & Date	Design Authority/Cog. Engineer Signature & Date

13a. Description of Change — 13b. Design Baseline Document? [X] Yes [] No

This temporary ECN supercedes temporary ECN 647250L, and provides the following:

- Installs temporary filtration in the sump pump discharge line.
- Routes the sump pump discharge directly to the existing Load-In transfer pump discharge header.

Drawings affected are:

- H-2-817974 Sheet 1, Rev. 8
- H-2-817976 Sheet 1, Rev. 2

Flex hose shall be attached with camlock or similar fittings. Hose type shall be Kuriyama Tigerflex or engineering approved equivalent transparent hose to allow observation of liquid flow. The filter will be an Aqua-Pure SS-12 unit. Piping hardware shall be either socket weld, NPT threaded, or tubing, as appropriate per attached ECN drawings. Pipe nipples and connector fittings shall be stainless steel. Manual valves shall be ball-type, fabricated of stainless steel with teflon seats. New check valve 59A-404L shall be a Laddish P/N 5261 $1^1/_2$ inch socket weld swing check valve, or engineering approved equivalent. Piping, fittings, and jointing methods shall meet the requirements of Hanford Site pipe code M-9, except for stainless steel tubing, which is to meet pipe code M-31. Install, inspect, and test the new piping installation in accordance with ASME B31.3 and Addenda for Category D fluid service.

(Block 13a continued on Page 3)

14a. Justification (mark one)

Criteria Change	[]	Design Improvement	[X]	Environmental	[]	Facility Deactivation	[]
As-Found	[]	Facilitate Const	[]	Const. Error/Omission	[]	Design Error/Omission	[]

14b. Justification Details

This temporary ECN performs two beneficial functions:

- Provides filtration capability so that debris and suspended from the sump will not be transported into other LWPF systems.
- Routes sump discharge away from either Load-In Station tank to prevent accumulation of stagnant water that can foster corrosion in the tanks.

This ECN will be closed by subsequent permanent upgrades to the Load-In Station. ECD for these upgrades is mid-CY1999.

15. Distribution (include name, MSIN, and no. of copies)

N. J. Sullivan	S6-72	1	J. E. Geary	S6-71	1
A. F. Crane	S6-72	1	~~J. M. Isdell~~	~~G3-17~~	~~1~~
R. N. Wagner*	S6-72	1	M. W. Bowman	S6-72	1
WCC Planning*	S6-71	1	T. W. Dallas	S6-74	1
L. L. Lin	S6-72	1	C. D. Skogley	T4-05	1
D. L. Flyckt	S6-71	1	R. R. Mabry	S6-71	1
B. S. Darling	T4-05	1			

(* = 1 Advance Copy)

JEG 11/5/98

RELEASE STAMP

DATE: NOV 05 1998 HANFORD RELEASE

STA: 30 ID: 251

ENGINEERING CHANGE NOTICE	Page 2 of 10	1. ECN (use no. from pg. 1) 647201L

16. Design Verification Required	17. Cost Impact ——> NA <—— ENGINEERING		CONSTRUCTION		18. Schedule Impact (days) ——> NA <——	
[X] Yes	Additional	[] $	Additional	[] $	Improvement	[]
[] No	Savings	[] $	Savings	[] $	Delay	[]

19. Change Impact Review: Indicate the related documents (other than the engineering documents identified on Side 1) that will be affected by the change described in Block 13. Enter the affected document number in Block 20.

SDD/DD	[NA]	Seismic/Stress Analysis	[NA]	Tank Calibration Manual	[NA]
Functional Design Criteria	[NA]	Stress/Design Report	[NA]	Health Physics Procedure	[NA]
Operating Specification	[NA]	Interface Control Drawing	[NA]	Spares Multiple Unit Listing	[NA]
Criticality Specification	[NA]	Calibration Procedure	[NA]	Test Procedures/Specification	[NA]
Conceptual Design Report	[NA]	Installation Procedure	[NA]	Component Index	[NA]
Equipment Spec.	[NA]	Maintenance Procedure	[NA]	ASME Coded Item	[NA]
Const. Spec.	[NA]	Engineering Procedure	[NA]	Human Factor Consideration	[NA]
Procurement Spec.	[NA]	Operating Instruction	[NA]	Computer Software	[NA]
Vendor Information	[NA]	Operating Procedure	[X]	Electric Circuit Schedule	[NA]
OM Manual	[NA]	Operational Safety Requirement	[NA]	ICRS Procedure	[NA]
FSAR/SAR	[NA]	IEFD Drawing	[NA]	Process Control Manual/Plan	[NA]
Safety Equipment List	[NA]	Cell Arrangement Drawing	[NA]	Process Flow Chart	[NA]
Radiation Work Permit	[NA]	Essential Material Specification	[NA]	Purchase Requisition	[NA]
Environmental Impact Statement	[NA]	Fac. Proc. Samp. Schedule	[NA]	Tickler File	[NA]
Environmental Report	[NA]	Inspection Plan	[NA]		[]
Environmental Permit	[NA]	Inventory Adjustment Request	[NA]		[]

20. Other Affected Documents: (NOTE: Documents listed below will not be revised by this ECN.) Signatures below indicate that the signing organization has been notified of other affected documents listed below.

Document Number/Revision	Document Number/Revision	Document Number Revision
POP-59A-001 Rev. X-1		

21. Approvals

	Signature	Date		Signature	Date
Design Authority – R. N. Wagner		10/27/98	Design Agent – R. N. Wagner		10/27/98
Cog. Eng. – R. N. Wagner		10/27/98	PE		
Cog. Mgr. – N. J. Sullivan (Informal Design Review)		~~11-4-98~~ 11-4-98	QA		
QA			Safety		
Safety			Design		
Environ.			Environ.		
Other			Other		
Operations					
			DEPARTMENT OF ENERGY		
			Signature or a Control Number that tracks the Approval Signature		
			ADDITIONAL		

H-2-817974 Sheet 1, Rev. 8, Zones B2-D2
IS NOW:

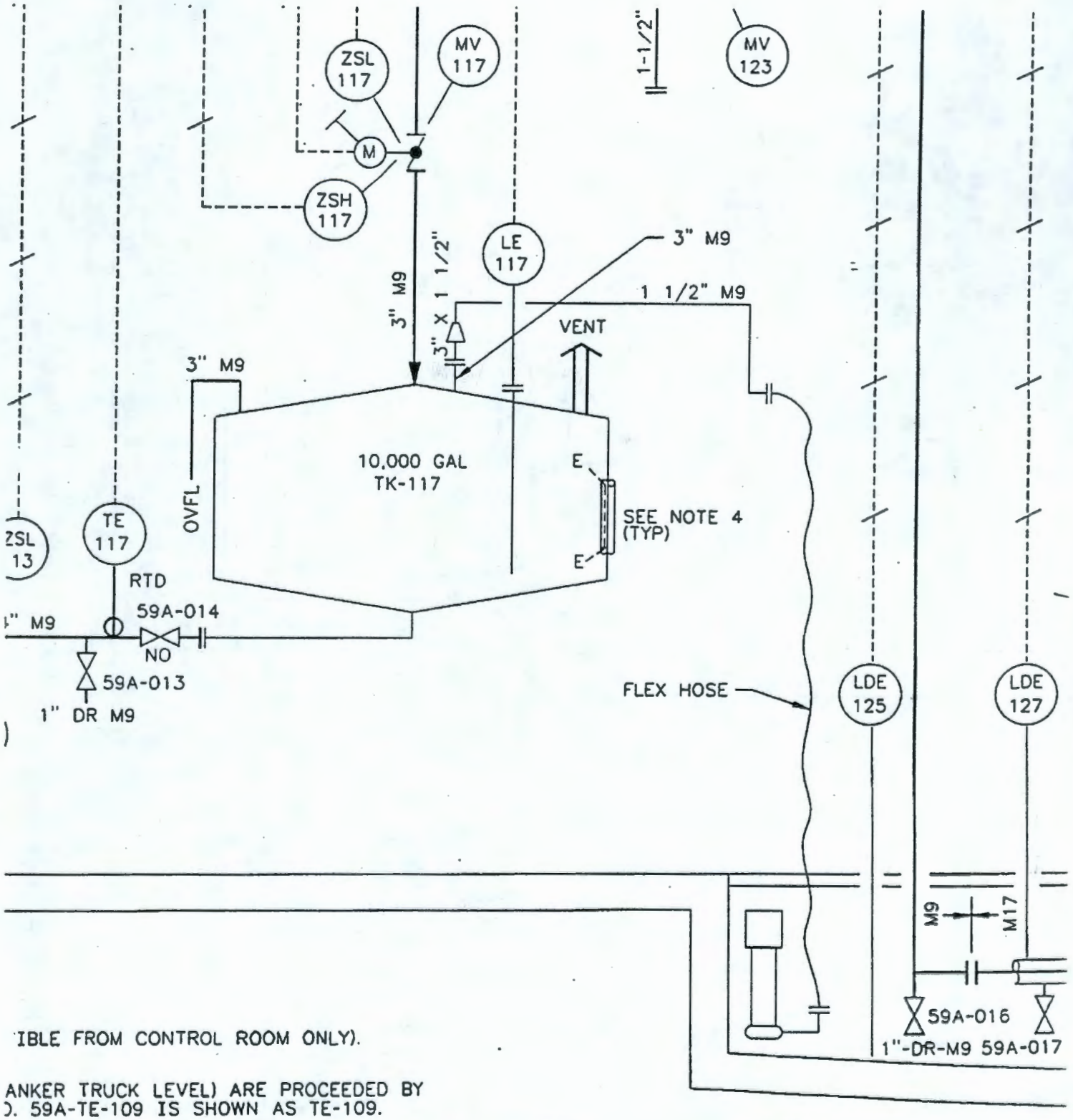

IBLE FROM CONTROL ROOM ONLY).

ANKER TRUCK LEVEL) ARE PROCEEDED BY
). 59A-TE-109 IS SHOWN AS TE-109.

H-2-817974 Sheet 1, Rev. 8, Zones B2-D2
CHANGE TO:

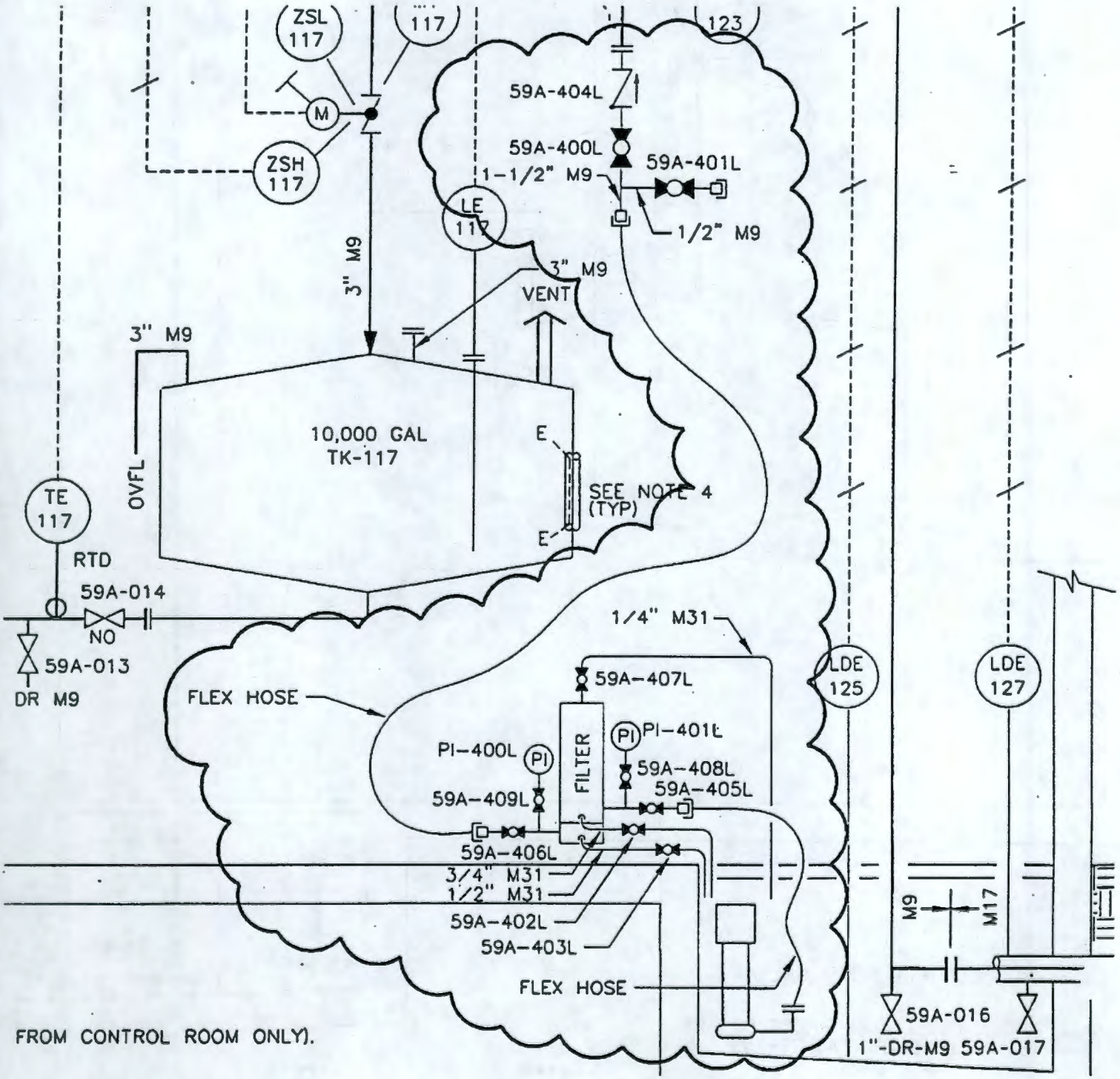

H-2-817976 Sheet 1, Rev. 2, Zones A7-B6
IS NOW:

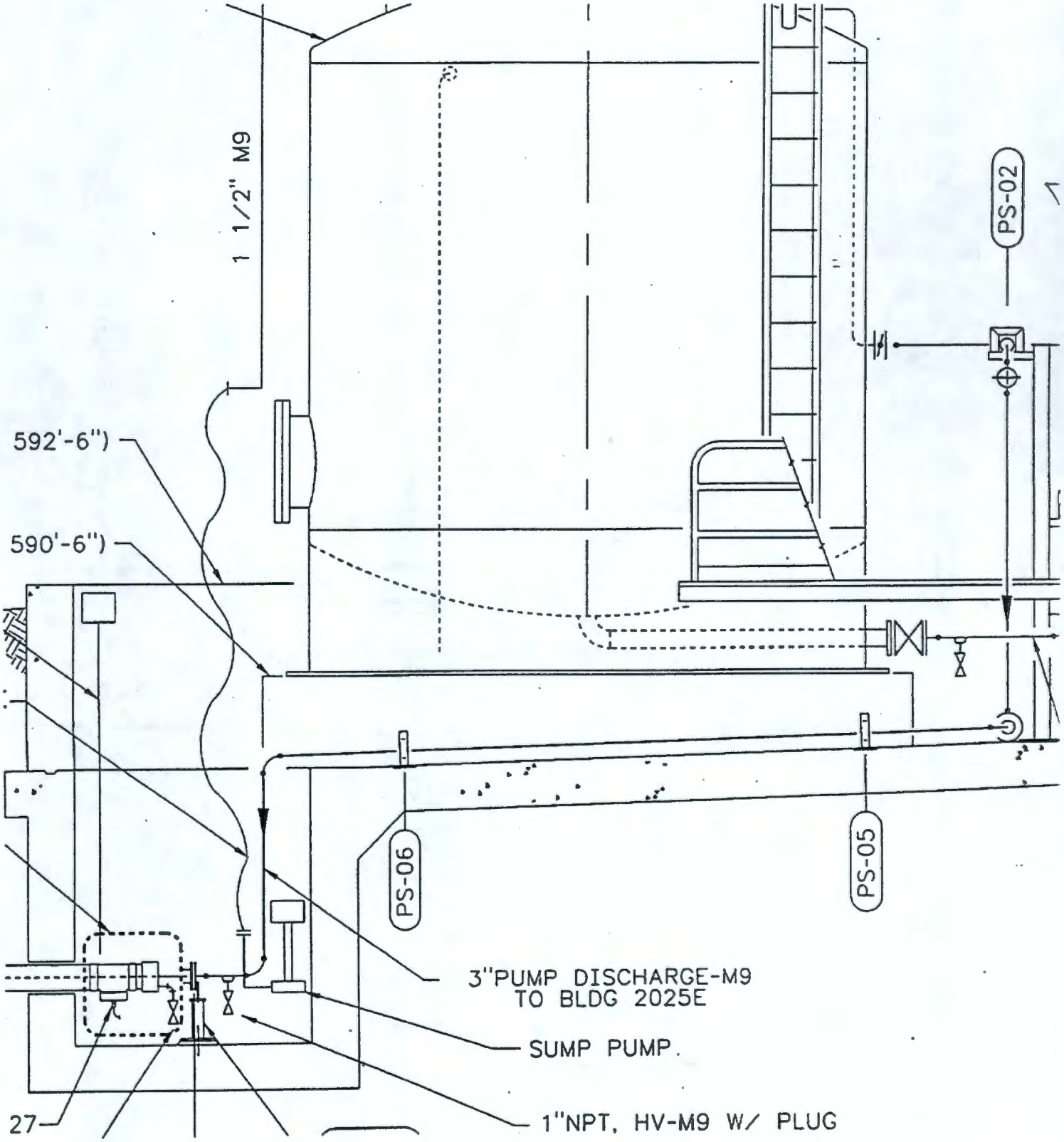

H-2-817976 Sheet 1, Rev. 2, Zones A7-B6
(Some unaffected details removed for clarity)
CHANGE TO:

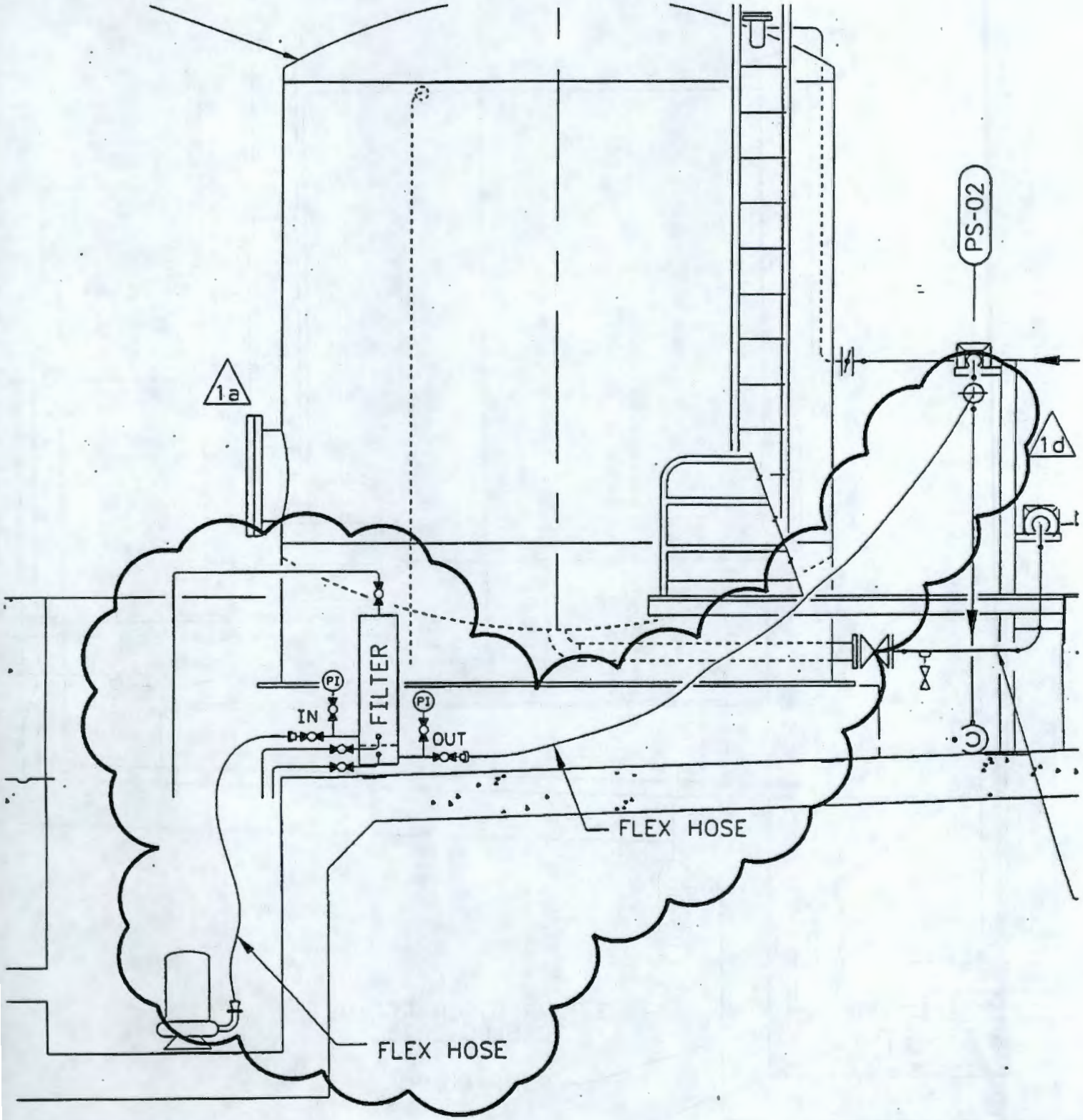

H-2-817976 Sheet 1, Rev. 2, Zones D8-E7
IS NOW:

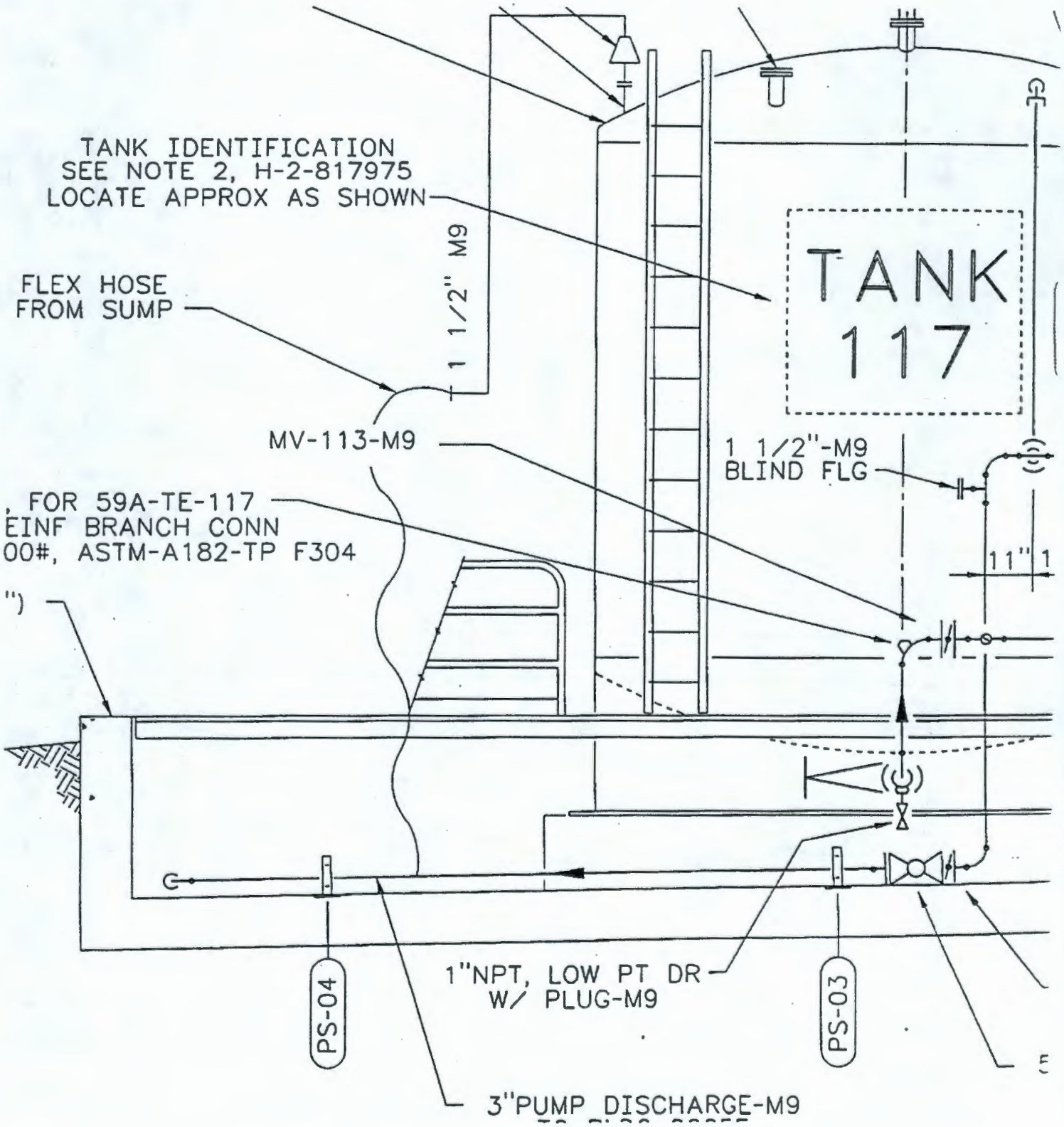

H-2-817976 Sheet 1, Rev. 2, Zones D8-E7
(Some unaffected details removed for clarity)
CHANGE TO:

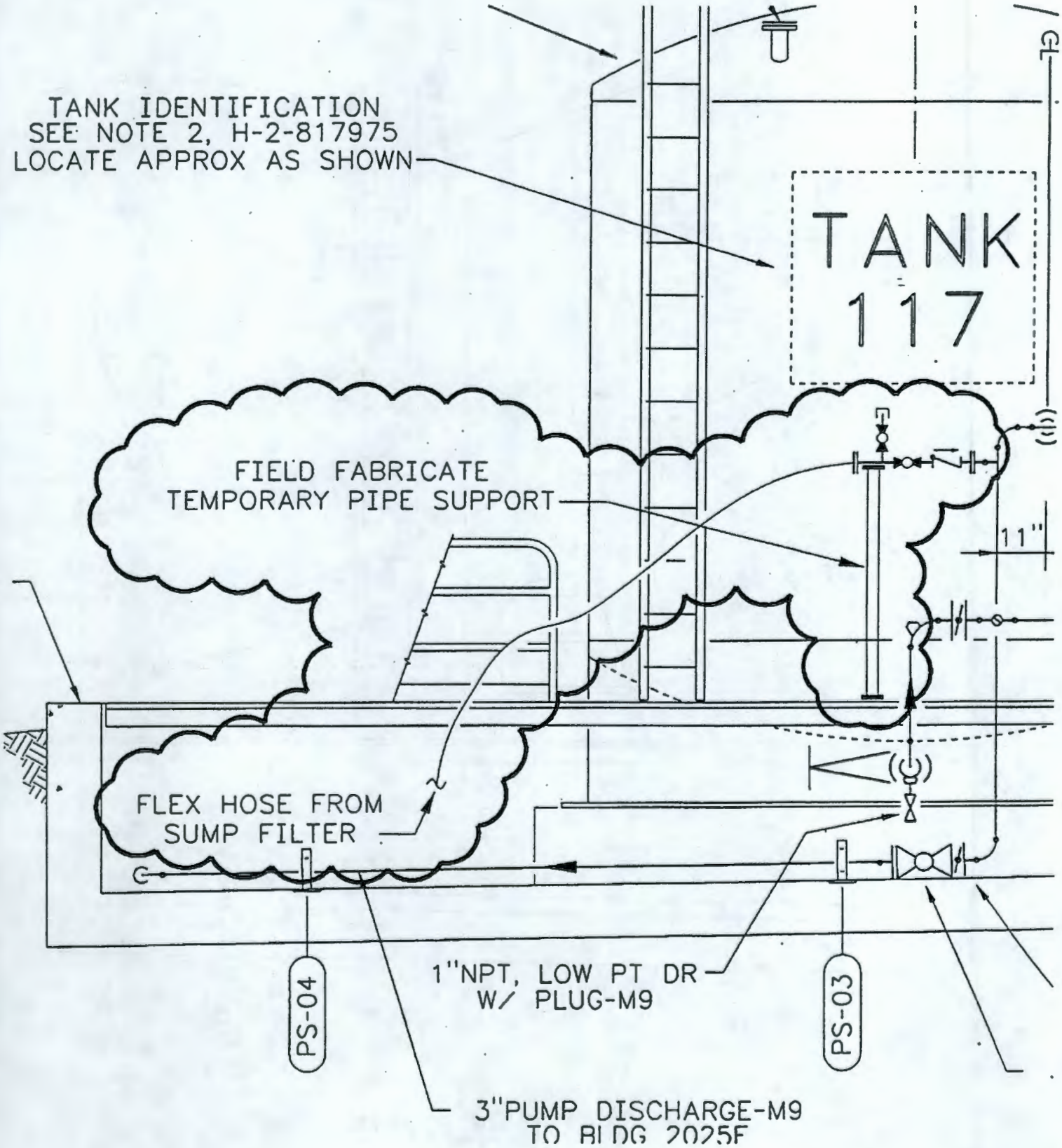

Current Revision of Pipe Spec M-9
(FOR REFERENCE ONLY; NOT CHANGED BY THIS ECN)

PIPE CODE M-9

SERVICE	MAX. OPERATING PRESSURE	MAX. OPERATING TEMP.
GENERAL NON CANYON SERVICE HNO_3, BELOW 160°F	100 PSIG	160°F
CHEM. SEWERS, INSIDE FE $(NH_2SO_3)_2$		
COLD VENT		
UNH		
VACUUM LINES IN LAB	1 ATM EXTERNAL PRESSURE	120°F
DEMINERALIZED & DISTILLED WATER	100 PSIG	120°F

ALL MATERIALS USED PER M-9 SHALL COMPLY WITH ASME B31.3.

SIZES	12" OR LESS	14" OR LARGER
PIPE	STAINLESS STEEL PER ASTM A312, GRADE TP304L.	
WALL THICKNESS	STANDARD	
PIPE JOINTS	WELDED	
FITTINGS SEE NOTE 2	STAINLESS STEEL PER ASTM A403, GRADE WP. BUTT WELD PER ASME B16.9 OR MSS-SP-43.	
NIPPLES	NONE	
COUPLINGS SEE NOTE 2	WHERE CALLED FOR ON DRAWINGS ONLY: DRESSER TYPE COUPLING WITH TYPE 304 STAINLESS STEEL MIDDLE RING, AND WITH SUITABLE GASKETS FOR 250°F TEMPERATURE SERVICE. MIDDLE RING SHALL HAVE A MINIMUM WALL THICKNESS AS FOLLOWS: 1/2" - 2 1/2" TO BE EQUAL OR GREATER THAN PIPE 3" - 8" TO BE EQUAL OR GREATER THAN 3/16" 10" - 36" TO BE EQUAL OR GREATER THAN 1/4"	
UNIONS	NONE	
FLANGES	RAISED FACE 150 LB FORGED STAINLESS STEEL PER ASTM A182, GRADE F304L. BLIND AND WELDNECK PER ASME B16.5. BORE OF WELDNECK TO MATCH PIPE I.D.	
GASKETS	TEFLON GASKET 1/16" TO 1/8" THICK (I.E. ANCHOR PACKING CO, ANKLON, GARLOCK GYLON, ETC.).	
5 BOLTING	STAINLESS STEEL BOLTS OR STUDS PER ASTM A193 GRADE B8. STAINLESS STEEL NUTS PER ASTM A194 GRADE 8F.	
VALVES SEE NOTE 1	GATE: GTV 1.5 SS BW GTV 1.5 SS FL GLOBE: GLV 1.5 SS BW GLV 1.5 SS FL CHECK: CV 1.5 SS BW CV 1.5 SS FL	SHALL BE AS IDENTIFIED ON DRAWING
5 STRAINERS SEE NOTE 2	BUTT WELD 600 LB STAINLESS STEEL PER ASTM A351 GRADE CF8M. BUTT WELD CONNECTIONS TO CONFORM TO ASME B16.9 OR MSS-SP-43. OR FLANGED 150 LB STAINLESS STEEL PER ASTM A351 GRADE CF8M. FLANGED CONNECTIONS TO CONFORM TO ASME B16.5.	
STRAINER SCREENS	MONEL OR STAINLESS STEEL SCREEN: 20 MESH .033" PERFORATED FOR WATER AND LIQUID SERVICES.	

(1) VALVE SPECIFICATIONS ARE ON SHEETS 60 THROUGH 63 OF DRAWING H-2-31750.
(2) FITTINGS NOT ACCEPTED IN ASME B31.3, TABLE 326.1 MAY BE USED PER B31.3 PAR 302.2.3.

REV NO	DESCRIPTION	REV BY DATE	CHK BY DATE	DFTG APPVD DATE	COG ENGR APPROVALS	OTHER	OTHER BY/DATE
5	REDRAWN PER ECN 708146 INC ECN 153804	HBM 5/98					

REVISIONS

DRAWN CAMPBELL	DATE 8/61	U.S. DEPARTMENT OF ENERGY DOE Field Office, Richland LOCKHEED MARTIN HANFORD CORP.
CHECKED JC WILLI	8/61	
DFTG APVD EM JOHNSON	8/61	PIPING MATERIAL CODE M-9
COG ENGR JC WILLI	8/61	
APPVD		SIZE B · BLDG NO 200 CEN · HOLD NO B510 · DWG NO H-2-31750 · REV 5
APPVD		
APPVD ME YATES	3/61	SCALE NONE · CDF · SHEET 9 OF

CADFILE B031750J CADCODE WIN95:ACD2:12.0:SS

DWG NO H-2-31750 SH 9 OF REV 5

REF NUMBER | TITLE | REFERENCE | NEXT USED ON

20J80008

Current Revision of Pipe Spec M-31
(FOR REFERENCE ONLY: NOT CHANGED BY THIS ECN)

PIPE CODE M-31

SERVICE	MAX. OPERATING PRESSURE	MAX. OPERATING TEMP.
NITROGEN AND INSTRUMENT AIR	150 PSIG	275°F
GENERAL PROCESS SYSTEMS AND GLOVE BOXES	90 PSIG	275°F
GENERAL PROCESS STEAM/ CONDENSATE/COOLING WATER	90 PSIG	275°F
OFF-GAS, SAMPLING, VACUUM, VENT SUMP/DRAIN	1 ATM EXTERNAL PRESSURE	275°F

ALL MATERIALS USED PER M-31 SHALL COMPLY WITH ASME B31.3.

SIZES	1/4"	3/8" AND 1/2"	3/4"	1"
PIPE	STAINLESS STEEL PER ASTM A269, GRADE TP 304L.			
WALL THICKNESS	.035"		.065"	
FITTINGS SEE NOTE 1	TYPE 316 STAINLESS STEEL, FLARELESS GRIP TYPE (I.E. CRAWFORD FITTINGS CORP. "SWAGELOK," HOKE, INC. "GYROLOK," OR PARKER-HANNAFIN CORP. "PARKER A-LOK," ETC.). DIFFERENT MANUFACTURERS' FITTING COMPONENT PARTS SHALL NOT BE MIXED.			
VALVES	GLOBE: GLOBE VALVE, OUTSIDE SCREW AND YOKE, BOLTED BONNET, SCREWED ENDS PER ANSI B1.20.1 OR FLARELESS GRIP TYPE ENDS. STAINLESS STEEL BODY TYPE 316SS, 316 OR 304 STAINLESS STEEL TRIM (I.E. WALWORTH #310, JENKINS #1316-A, POWELL #2474, PACIFIC #S-701, ETC.) CHECK: CHECK VALVE, FLARELESS GRIP TYPE ENDS, 316 STAINLESS BODY, TFE OR TFE COATED STAINLESS STEEL GASKETS. CRACKING PRESSURE OF 1 PSI AND IN-LINE ADJUSTABILITY (I.E. NUPRO "C" SERIES, ETC.). 2 AND 3 WAY BALL: BALL VALVE, FLARELESS GRIP TYPE ENDS, 316 STAINLESS STEEL BODY, TFE PACKING AND BUSHINGS, AND STAINLESS STEEL STEM (I.E. WHITEY "40" SERIES, HOKE "FLOWITE," "ROTO-BALL," OR "SELECTOMITE," ETC.). OR BALL VALVE, SCREWED ENDS PER ANSI B1.20.1, 316 STAINLESS STEEL BODY AND STEM TFE PACKING AND SEATS (I.E. WORCHESTER "MISER"). NEEDLE OR REGULATING: 316 STAINLESS STEEL BODY, FLARELESS GRIP TYPE ENDS, TFE PACKING AND 316 STAINLESS STEEL STEM (I.E. WHITEY "1" AND "18" SERIES, HOKE "2200" SERIES, ETC.).			

(1) FITTINGS NOT ACCEPTED IN ASME B31.1, TABLE 326.1 MAY BE USED PER B31.3, PAR 302.2.3.

REF NUMBER	TITLE
REFERENCE	
NEXT USED ON	

REV NO	DESCRIPTION	REV BY DATE	CHK BY DATE	OPTG APPVD DATE	COG ENGR	OTHER	OTHER
5	REDRAWN PER ECN 708146	HBM 5/98					

REVISIONS

CADFILE 831750HA CADCODE WIN95:ACD2:12.0:SS

DRAWN CAMPBELL	4/15	
CHECKED JCW	4/15	
OPTG APVD JC WILLI	4/15	
COG ENGR YATES	3/11	
APPVD		
APPVD		
APPVD WC ARMSTRONG	4/15	

U.S. DEPARTMENT OF ENERGY
DOE Field Office, Richland
LOCKHEED MARTIN HANFORD CORP.

PIPING MATERIAL CODE
M-31

SIZE E3 | DWG NO 200 GEN | SCALE 85/0 | DOC NO H-2-31750 | REV 5

SCALE NONE | SHEET 31 OF

CHK PRINT ☐ | CONVERT PRINT ☐

DOC NO H-2-31750 REV 5 SH 26 OF

S

CPF 18

ENGINEERING CHANGE NOTICE

ESSENTIAL

1. ECN 642820 L

Proj. ECN

2. ECN Category (mark one)	3. Originator's Name, Organization, MSIN, and Telephone No.	4. USQ Required?	5. Date
Supplemental [] Direct Revision [] Change ECN [] Temporary [X] Standby [] Supersedure [] Cancel/Void []	RN Wagner/32200/S6-72/376-4460	[] Yes [X] No	April 9, 1998
	6. Project Title/No./Work Order No. Block Liquid Transfer Route to T-117/A4055	7. Bldg./Sys./Fac. No. 2025E/59A/ 200 Area ETF	8. Approval Designator NA
	9. Document Numbers Changed by this ECN (includes sheet no. and rev.) See Block 13	10. Related ECN No(s). NA	11. Related PO No. NA

12a. Modification Work	12b. Work Package No.	12c. Modification Work Complete	12d. Restored to Original Condition (Temp. or Standby ECN only)
[X] Yes (fill out Blk. 12b) [] No (NA Blks. 12b, 12c, 12d)	EL-98-00268/L	Design Authority/Cog. Engineer Signature & Date	Design Authority/Cog. Engineer Signature & Date

13a. Description of Change — 13b. Design Baseline Document? [X] Yes [] No

This ECN provides temporary blockage of the liquid transfer line to Load-In Station tank T-117, which has been taken out of service for repairs due to leakage. Valve M-117 is removed, and blind flanges (3", 150 psi rating) are installed on both sides of the piping.

Drawing modified is as follows:

H-2-817974, Sheet 1, Rev. 5
H-2-817975, Sheet 1, Rev. 4
H-2-817976, Sheet 1, Rev. 1

Piping, fittings, and jointing methods shall meet the requirements of Hanford Site piping code M9. Install, inspect, and test the new piping installation in accordance with ASME B31.3 and Addenda for Category D fluid service.

(Block 13a continued on Page 3)

14a. Justification (mark one)

Criteria Change	[X]	Design Improvement	[]	Environmental	[]	Facility Deactivation	[]
As-Found	[]	Facilitate Const	[]	Const. Error/Omission	[]	Design Error/Omission	[]

14b. Justification Details

Blockage of the transfer line to tank T-117 is necessary because the tank is leaking, and is out of service for repairs.

15. Distribution (include name, MSIN, and no. of copies)

N. J. Sullivan	S6-72	1	R. J. Nicklas	S6-72	1
J. E. Geary	S6-71	1	A. K. Yoakum	S6-71	1
R. N. Wagner*	S6-72	2	M. W. Bowman	S6-72	1
E. A. McNamar	S6-72	1	C. D. Skogley	T4-05	1
D. L. Tubbs	S6-74	1	WCC Planning	S6-71*	1
D. P. Nelsen	S6-71	1	T. W. Dallas	S6-74	1
J. M. Petty	S6-74	1	D. L. Flyckt	S6-71	1
(* = 1 Advance Copy)			J. JSDELL	G3-17	1

RELEASE STAMP

APR 14 1998

DATE: HANFORD RELEASE ID:

STA: 30 25

A-7900-013-2 (05/96) GEF095

ENGINEERING CHANGE NOTICE	Page 2 of 8	1. ECN (use no. from pg. 1) 642820/L

16. Design Verification Required	17. Cost Impact ----------> NA <---------- ENGINEERING		CONSTRUCTION		18. Schedule Impact (days) ----------> NA <----------	
[X] Yes	Additional	[] $	Additional	[] $	Improvement	[]
[] No	Savings	[] $	Savings	[] $	Delay	[]

19. Change Impact Review: Indicate the related documents (other than the engineering documents identified on Side 1) that will be affected by the change described in Block 13. Enter the affected document number in Block 20.

SDD/DD	[NA]	Seismic/Stress Analysis	[NA]	Tank Calibration Manual	[NA]
Functional Design Criteria	[NA]	Stress/Design Report	[NA]	Health Physics Procedure	[NA]
Operating Specification	[NA]	Interface Control Drawing	[NA]	Spares Multiple Unit Listing	[NA]
Criticality Specification	[NA]	Calibration Procedure	[NA]	Test Procedures/Specification	[NA]
Conceptual Design Report	[NA]	Installation Procedure	[NA]	Component Index	[NA]
Equipment Spec.	[NA]	Maintenance Procedure	[NA]	ASME Coded Item	[NA]
Const. Spec.	[NA]	Engineering Procedure	[NA]	Human Factor Consideration	[NA]
Procurement Spec.	[NA]	Operating Instruction	[NA]	Computer Software	[NA]
Vendor Information	[NA]	Operating Procedure	[X]	Electric Circuit Schedule	[NA]
OM Manual	[NA]	Operational Safety Requirement	[NA]	ICRS Procedure	[NA]
FSAR/SAR	[NA]	IEFD Drawing	[NA]	Process Control Manual/Plan	[NA]
Safety Equipment List	[NA]	Cell Arrangement Drawing	[NA]	Process Flow Chart	[NA]
Radiation Work Permit	[NA]	Essential Material Specification	[NA]	Purchase Requisition	[NA]
Environmental Impact Statement	[NA]	Fac. Proc. Samp. Schedule	[NA]	Tickler File	[NA]
Environmental Report	[NA]	Inspection Plan	[NA]		[]
Environmental Permit	[NA]	Inventory Adjustment Request	[NA]		[]

20. Other Affected Documents: (NOTE: Documents listed below will not be revised by this ECN.) Signatures below indicate that the signing organization has been notified of other affected documents listed below.

Document Number/Revision	Document Number/Revision	Document Number Revision
POP-59A-001, Rev. 20		

21. Approvals

	Signature	Date		Signature	Date
Design Authority - R. N. Wagner		4/9/98	Design Agent - R. N. Wagner		4/9/98
Cog. Eng. - R. N. Wagner		4/9/98	PE		
Cog. Mgr. - R. J. Nicklas	FOR	4-12-98	QA		
QA informal review			Safety		
Safety			Design		
Environ.			Environ.		
Other			Other		

DEPARTMENT OF ENERGY

Signature or a Control Number that tracks the Approval Signature

ADDITIONAL

BLOCK 13a CONTINUED

H-2-817974, Sheet 1, Rev. 5, Zones C3–D4

IS:

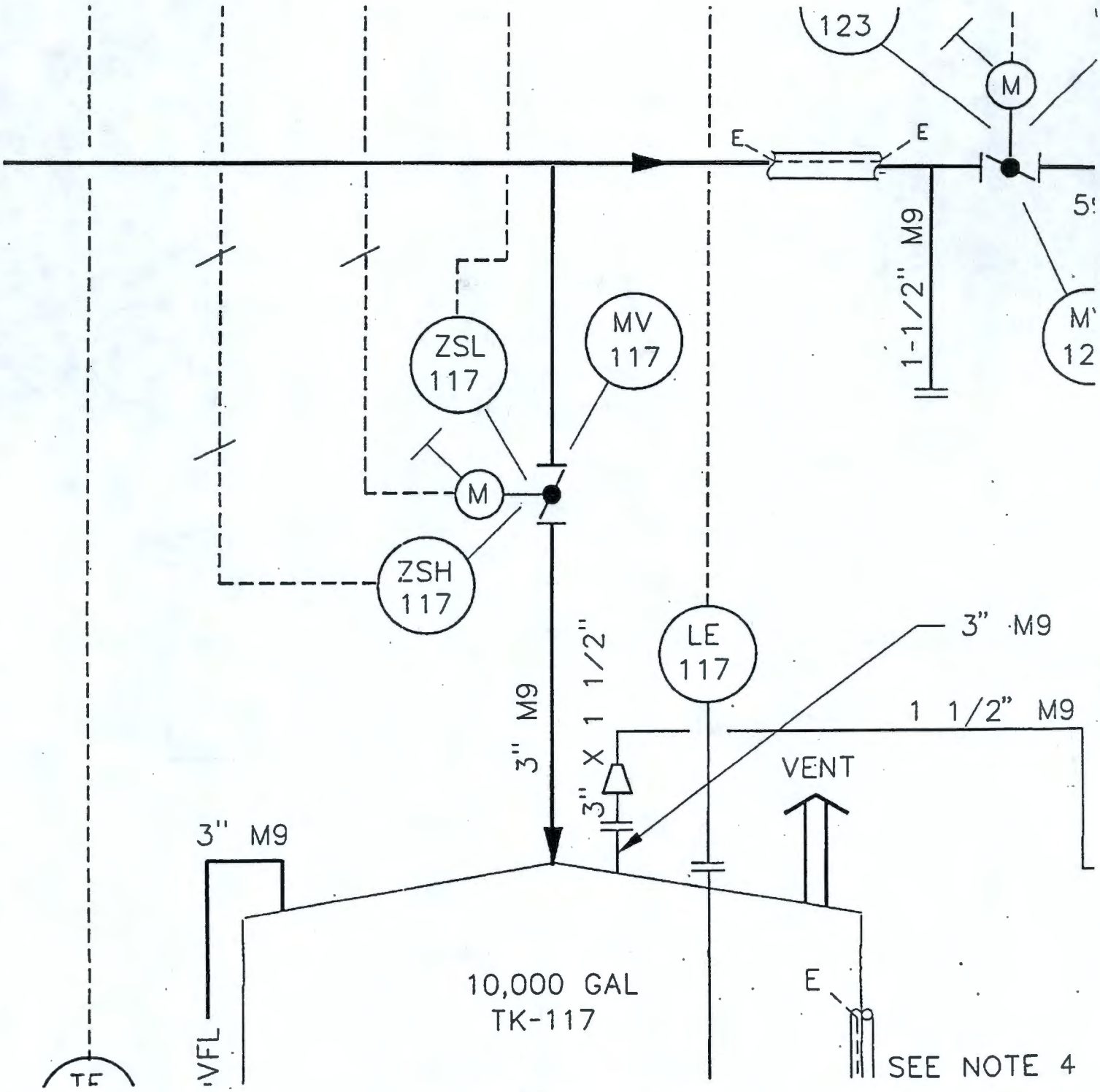

H-2-817974, Sheet 1, Rev. 5, Zones C3–D4

CHANGE TO:

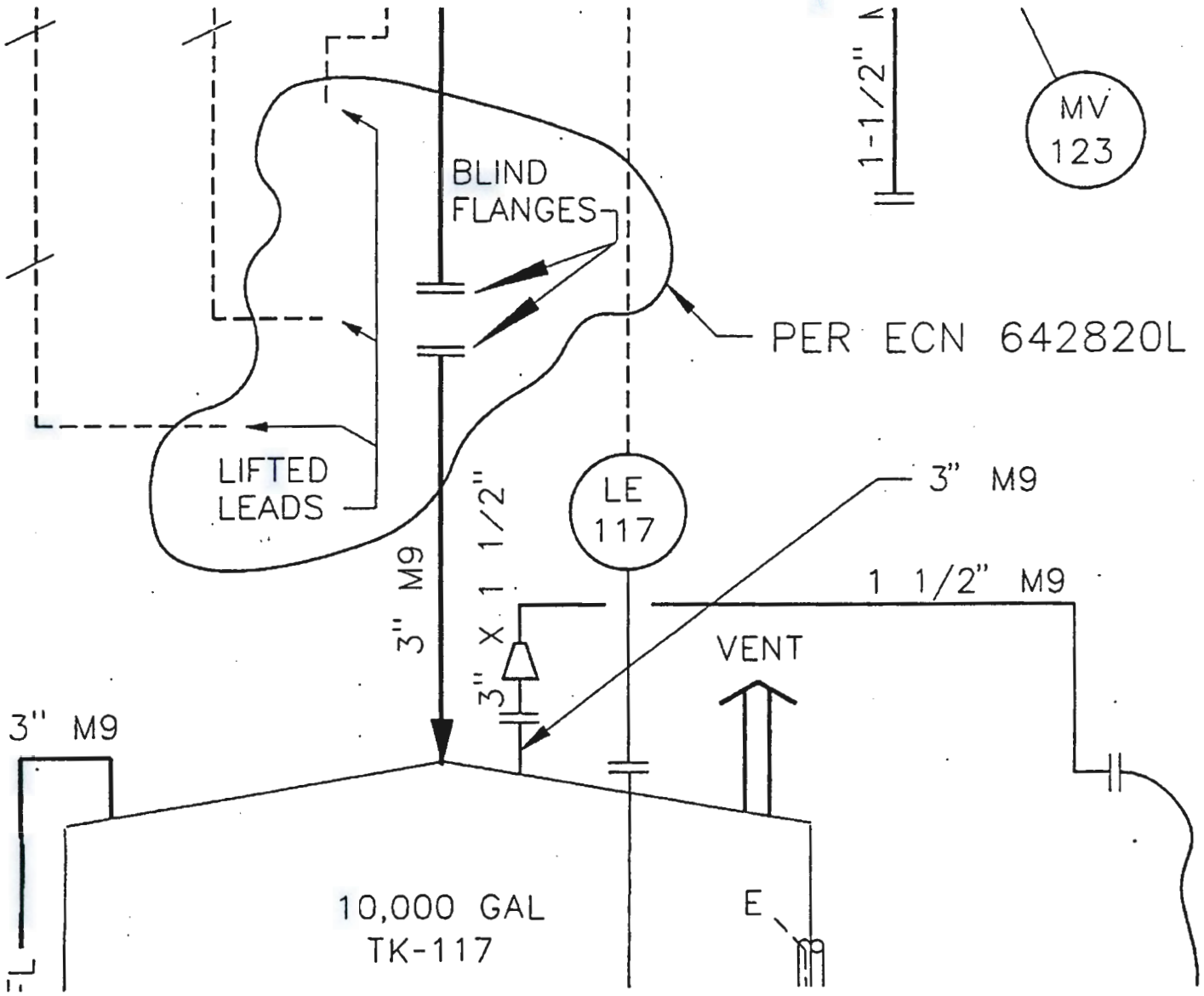

H-2-817975, Sheet 1, Rev. 4, Zone D6

IS:

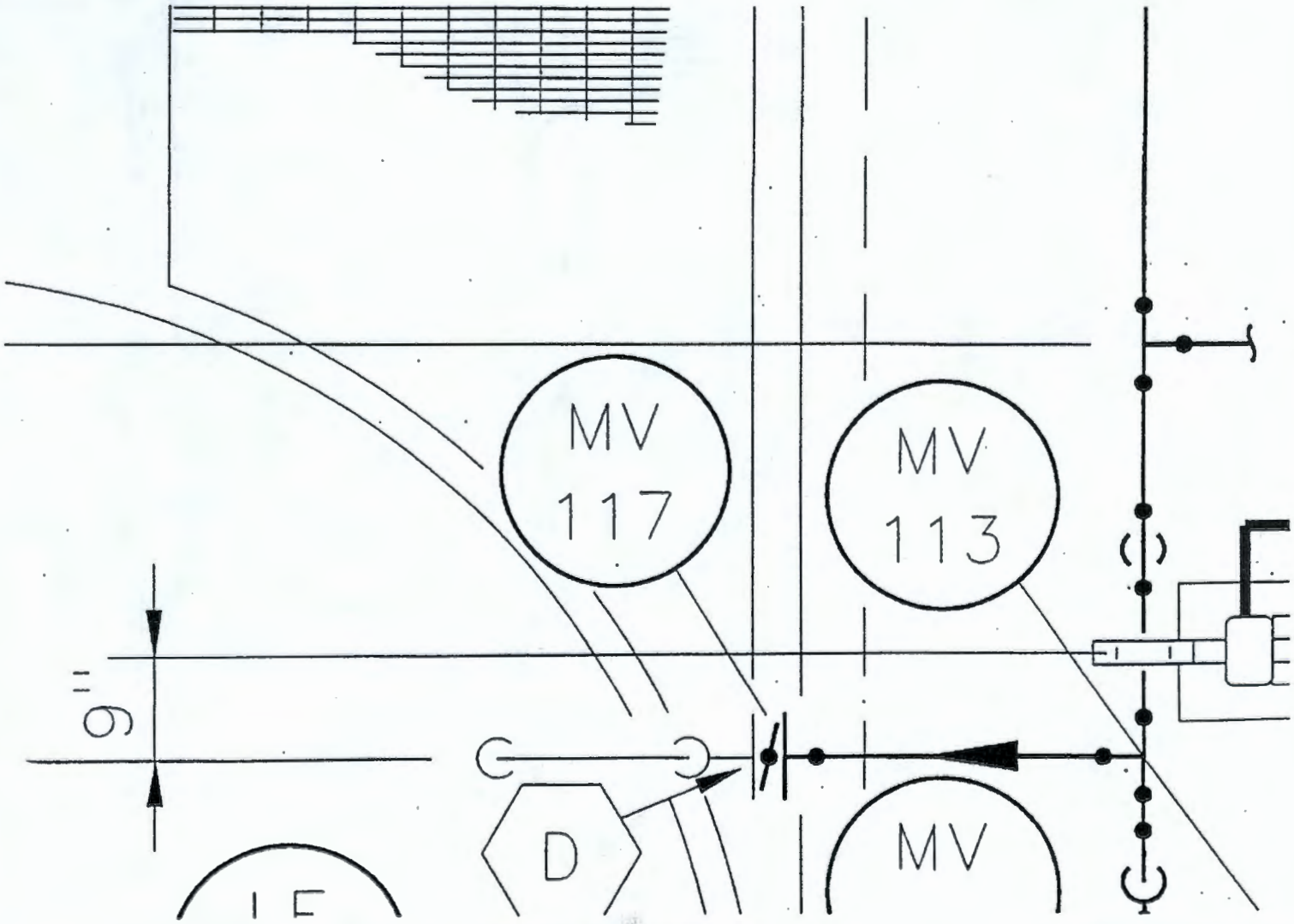

H-2-817975, Sheet 1, Rev. 4, Zone D6

CHANGE TO:

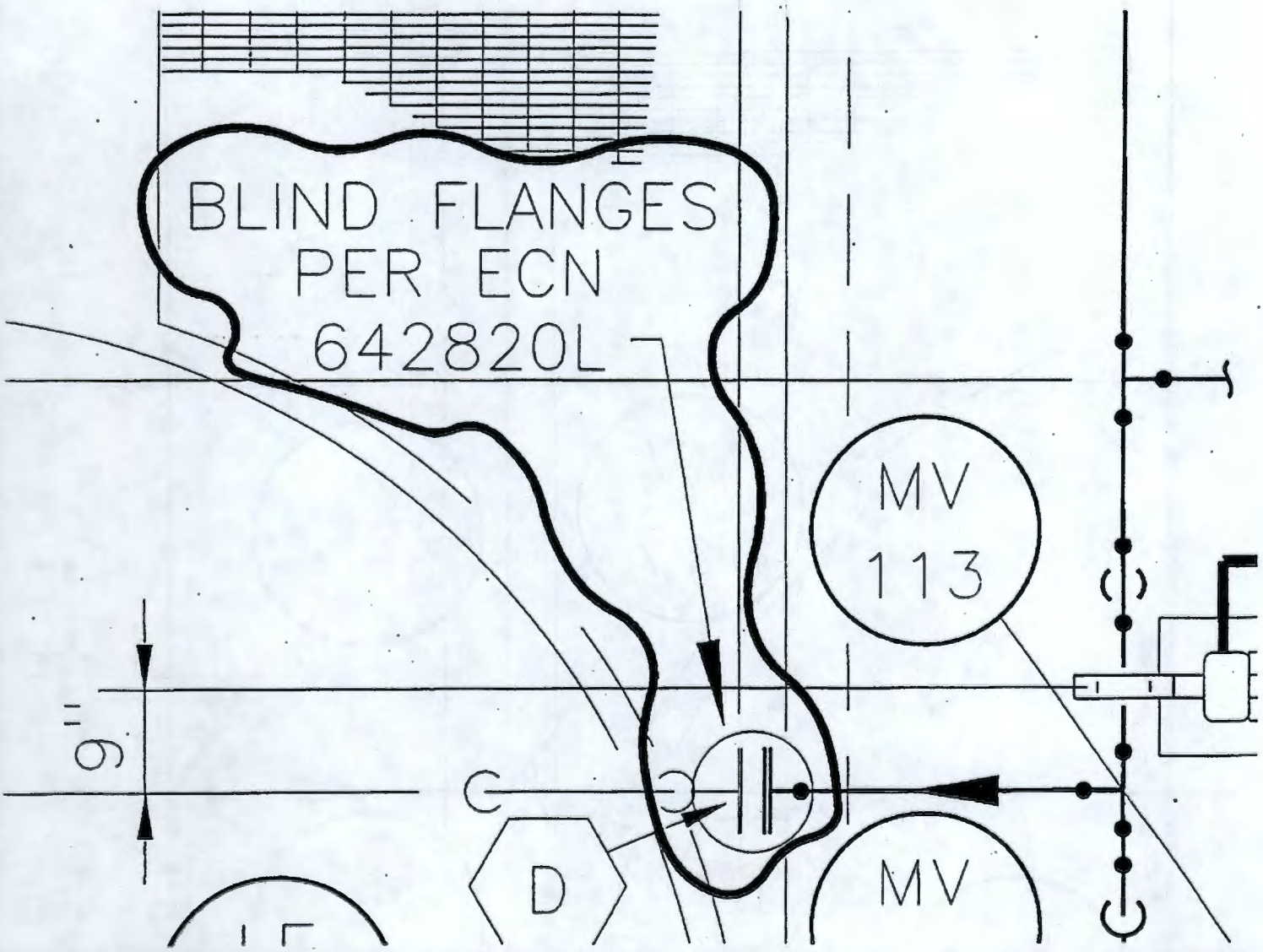

H-2-817976, Sheet 1, Rev. 1, Zone C6

IS:

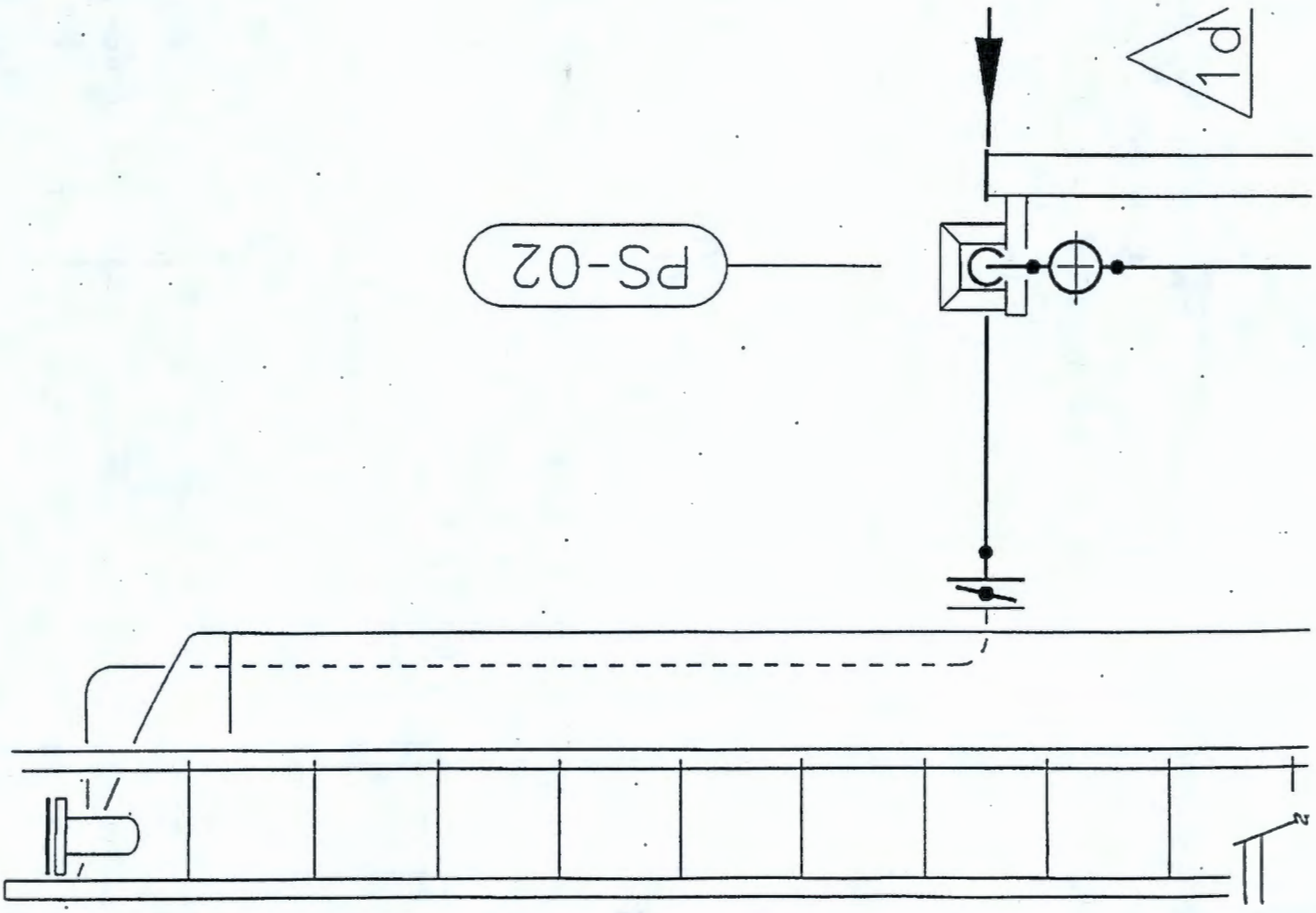

H-2-817976, Sheet 1, Rev. 1, Zone C6

CHANGE TO:

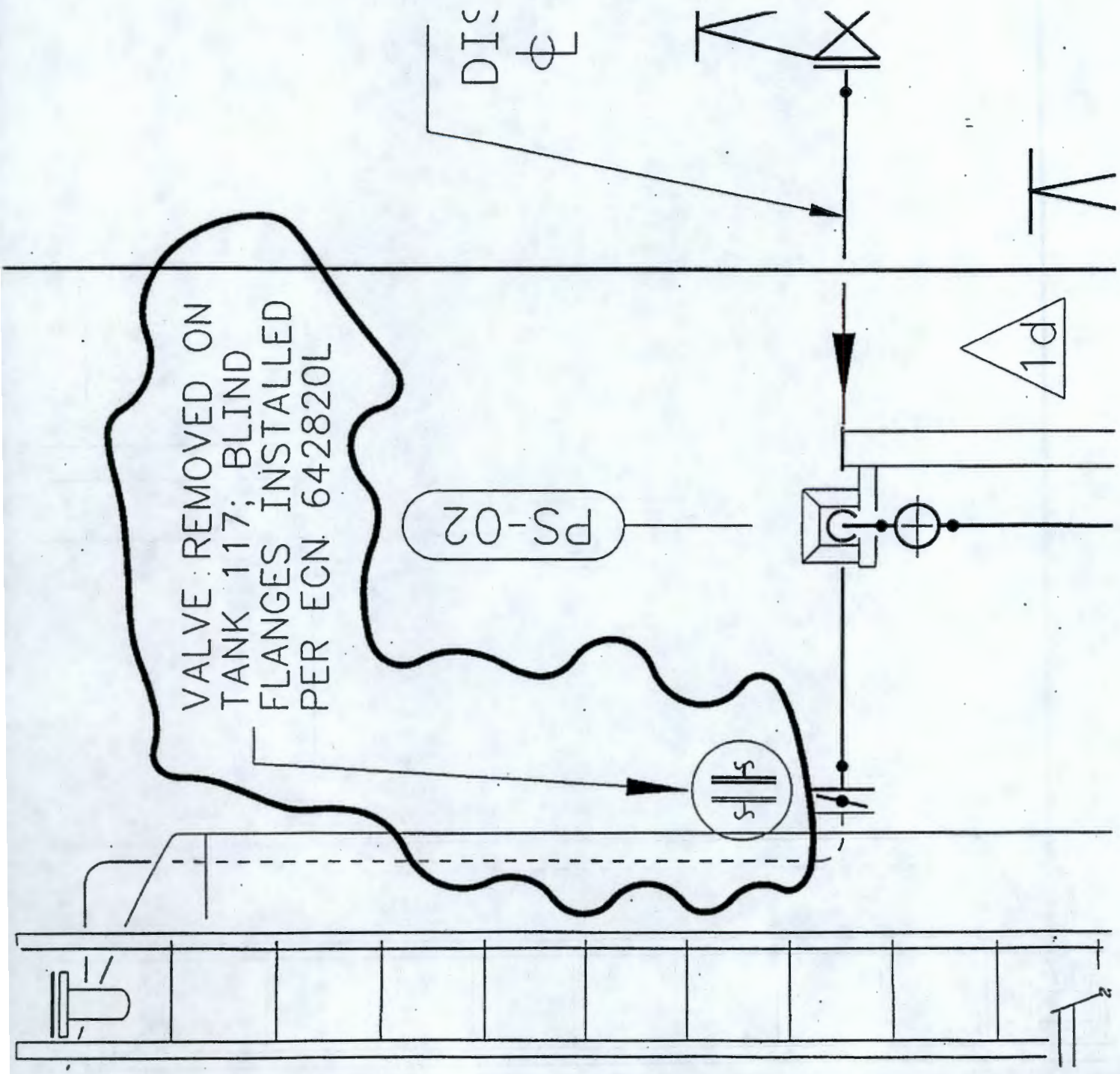

ESSENTIAL

ENGINEERING CHANGE NOTICE

Page 1 of 10

1. ECN 647247

Proj. ECN

2. ECN Category (mark one)	3. Originator's Name, Organization, MSIN, and Telephone No.	4. USQ Required?	5. Date
Supplemental [X] Direct Revision [] Change ECN [] Temporary [] Standby [] Supersedure [] Cancel/Void []	RN Wagner/32230/S6-72/376-4460	[] Yes [X] No	August 27, 1998
	6. Project Title/No./Work Order No. Install Tent Over ETF Load-In Station/A4055	7. Bldg./Sys./Fac. No. 2025EC/59A/ 200 Area ETF	8. Approval Designator NA
	9. Document Numbers Changed by this ECN (includes sheet no. and rev.) See Block 13	10. Related ECN No(s). NA	11. Related PO No. NA

12a. Modification Work	12b. Work Package No.	12c. Modification Work Complete	12d. Restored to Original Condition (Temp. or Standby ECN only)
[X] Yes (fill out Blk. 12b) [] No (NA Blks. 12b, 12c, 12d)	EL-97-00853	JAN 15 1999 STA-30 (18) 1/13/99 Design Authority/Cog. Engineer Signature & Date	N/A Design Authority/Cog. Engineer Signature & Date

13a. Description of Change

13b. Design Baseline Document? [X] Yes [] No

This ECN installs a tent over the ETF Load-In Station to provide shelter during inclement weather. Mechanical modifications to the Load-In Station necessary to accommodate the tent placement are covered in this ECN.

Drawings affected are:

- H-2-817970 Sheet 1, Rev. 1
- H-2-817972 Sheet 1, Rev. 1
- H-2-817975 Sheet 1, Rev. 5
- H-2-817976 Sheet 1, Rev. 1

Concrete anchor bolts for relocation of the Load-In transfer line support frame shall be Hilti P/N 0045407, Description Code KB II SS 58-812 Ext Trd, or Engineering approved equivalent. Piping, fittings, and jointing methods shall meet the requirements of Piping Specification Class M-9. Install, inspect, and test the new piping installation in accordance with ASME B31.3 and Addenda for Category D fluid service.

(Block 13a continued on Page 3)

14a. Justification (mark one)

Criteria Change	[]	Design Improvement	[X]	Environmental	[]	Facility Deactivation	[]
As-Found	[]	Facilitate Const	[]	Const. Error/Omission	[]	Design Error/Omission	[]

14b. Justification Details

The tent will provide shelter to ensure operator safety and allow continuity of operations during inclement weather.

15. Distribution (include name, MSIN, and no. of copies)

N. J. Sullivan	S6-72	1	J. E. Geary	S6-71	1
A. K. Yoakum	S6-71	1	E. A. McNamar	S6-72	1
R. N. Wagner*	S6-72	2	M. W. Bowman	S6-72	1
WCC Planning	S6-71*	1	T. W. Dallas	S6-74	1
L. L. Lin	S6-72	1	D. L. Tubbs	S6-74	1
D. L. Flyckt	S6-71	1	C. M. Towne	S6-74	1

(* = 1 Advance Copy)

IPF 7 - S6-72 1

IPF 4 - H6-26 1

RELEASE STAMP

DATE: SEP 08 1998 HANFORD RELEASE

STA: 4

ID: 2.

ENGINEERING CHANGE NOTICE	Page 2 of 10	1. ECN (use no. from pg. 1) 647247

16. Design Verification Required	17. Cost Impact ——> NA <—— ENGINEERING		CONSTRUCTION		18. Schedule Impact (days) ——> NA <——	
[X] Yes	Additional	[] $	Additional	[] $	Improvement	[]
[] No	Savings	[] $	Savings	[] $	Delay	[]

19. Change Impact Review: Indicate the related documents (other than the engineering documents identified on Side 1) that will be affected by the change described in Block 13. Enter the affected document number in Block 20.

SDD/DD	[NA]	Seismic/Stress Analysis	[NA]	Tank Calibration Manual	[NA]
Functional Design Criteria	[NA]	Stress/Design Report	[NA]	Health Physics Procedure	[NA]
Operating Specification	[NA]	Interface Control Drawing	[NA]	Spares Multiple Unit Listing	[NA]
Criticality Specification	[NA]	Calibration Procedure	[NA]	Test Procedures/Specification	[NA]
Conceptual Design Report	[NA]	Installation Procedure	[NA]	Component Index	[NA]
Equipment Spec.	[NA]	Maintenance Procedure	[NA]	ASME Coded Item	[NA]
Const. Spec.	[NA]	Engineering Procedure	[NA]	Human Factor Consideration	[NA]
Procurement Spec.	[NA]	Operating Instruction	[NA]	Computer Software	[NA]
Vendor Information	[NA]	Operating Procedure	[NA]	Electric Circuit Schedule	[NA]
OM Manual	[NA]	Operational Safety Requirement	[NA]	ICRS Procedure	[NA]
FSAR/SAR	[NA]	IEFD Drawing	[NA]	Process Control Manual/Plan	[NA]
Safety Equipment List	[NA]	Cell Arrangement Drawing	[NA]	Process Flow Chart	[NA]
Radiation Work Permit	[NA]	Essential Material Specification	[NA]	Purchase Requisition	[NA]
Environmental Impact Statement	[NA]	Fac. Proc. Samp. Schedule	[NA]	Tickler File	[NA]
Environmental Report	[NA]	Inspection Plan	[NA]		[]
Environmental Permit	[NA]	Inventory Adjustment Request	[NA]		[]

20. Other Affected Documents: (NOTE: Documents listed below will not be revised by this ECN.) Signatures below indicate that the signing organization has been notified of other affected documents listed below.

Document Number/Revision	Document Number/Revision	Document Number Revision
No other documents are affected by this ECN.		

21. Approvals

	Signature	Date		Signature	Date
Design Authority – R. N. Wagner	[signature]	8/27/98	Design Agent – R. N. Wagner	[signature]	8/27/98
Cog. Eng. – R. N. Wagner	[signature]	8/27/98	PE		
Cog. Mgr. – N. J. Sullivan (Informal Design Review)	[signature]	9-8-98	QA		
QA			Safety		
Safety			Design		
Environ.			Environ.		
Other			Other		
Operations – J. E. Geary	[signature]	9-8-98			
			DEPARTMENT OF ENERGY		
			Signature or a Control Number that tracks the Approval Signature		
			ADDITIONAL		

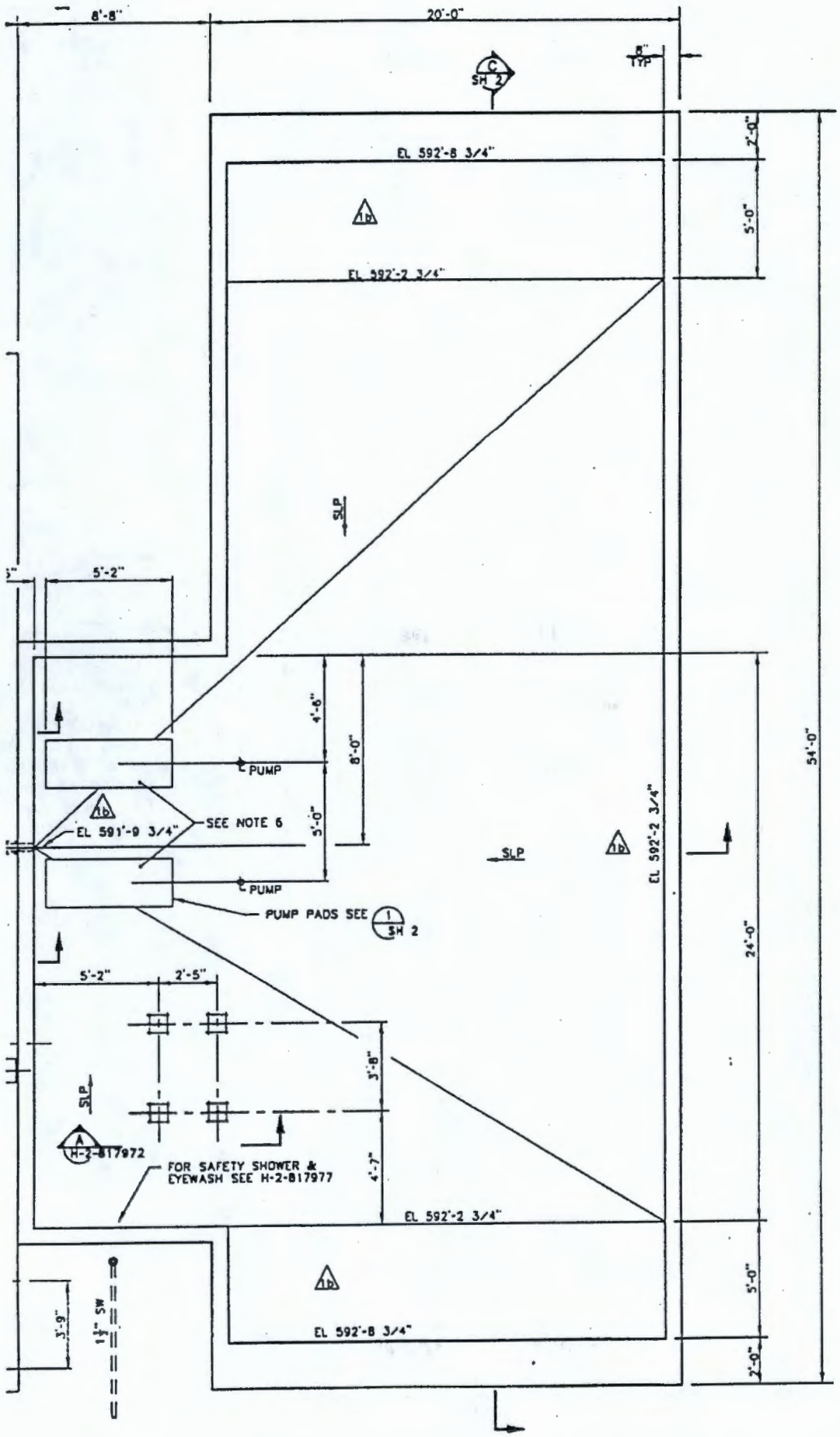
8'-8"
20'-0"
C
SH 2
8" TYP
EL 592'-8 3/4"
EL 592'-2 3/4"
2'-0"
5'-0"
SLP
5'-2"
4'-6"
8'-0"
PUMP
SEE NOTE 6
EL 591'-9 3/4"
5'-0"
PUMP
PUMP PADS SEE 1 SH 2
EL 592'-2 3/4"
54'-0"
24'-0"
5'-2"
2'-5"
3'-8"
4'-7"
A
H-2-817972
FOR SAFETY SHOWER & EYEWASH SEE H-2-817977
EL 592'-2 3/4"
EL 592'-8 3/4"
5'-0"
2'-0"
3'-9"
1½" SW

CHANGE TO:

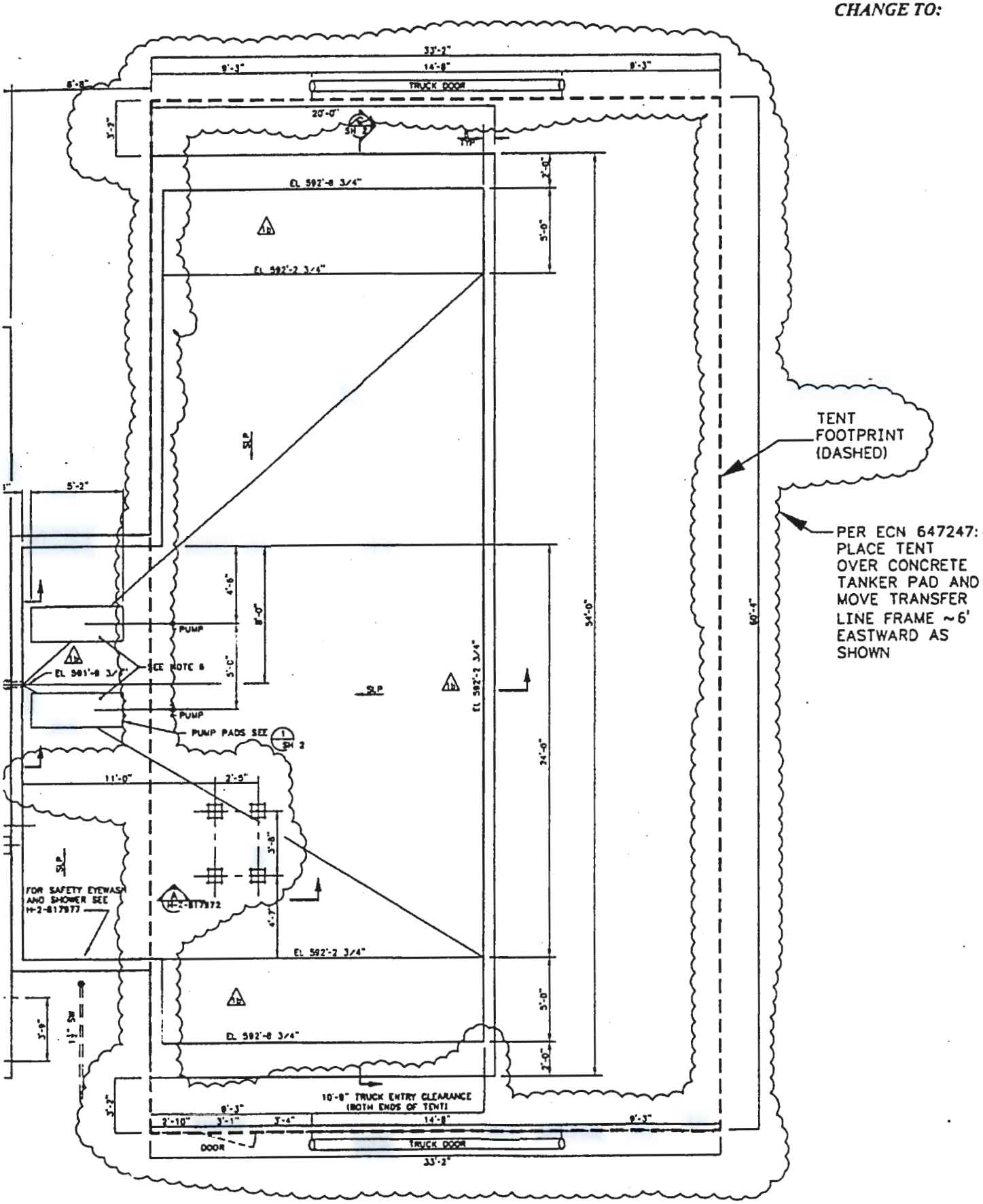
33'-2"
9'-3"
14'-8"
9'-3"
TRUCK DOOR
20'-0"
EL 592'-8 3/4"
EL 592'-2 3/4"
5'-0"
2'-0"
34'-0"
60'-4"
5'-2"
4'-6"
8'-0"
PUMP
SEE NOTE 6
EL 591'-8 3/4"
PUMP
PUMP PADS SEE
11'-0"
2'-5"
3'-8"
4'-7"
FOR SAFETY EYEWASH AND SHOWER SEE H-2-817977
H-2-817972
3'-9"
1'-2" SW
10'-8" TRUCK ENTRY CLEARANCE (BOTH ENDS OF TENT)
9'-3"
2'-10"
3'-1"
3'-4"
DOOR
TENT FOOTPRINT (DASHED)
PER ECN 647247: PLACE TENT OVER CONCRETE TANKER PAD AND MOVE TRANSFER LINE FRAME ~6' EASTWARD AS SHOWN

Block 13a Cont'd
H-2-817972 Sh 1 Rev 1
Zones C4–F8
IS NOW:

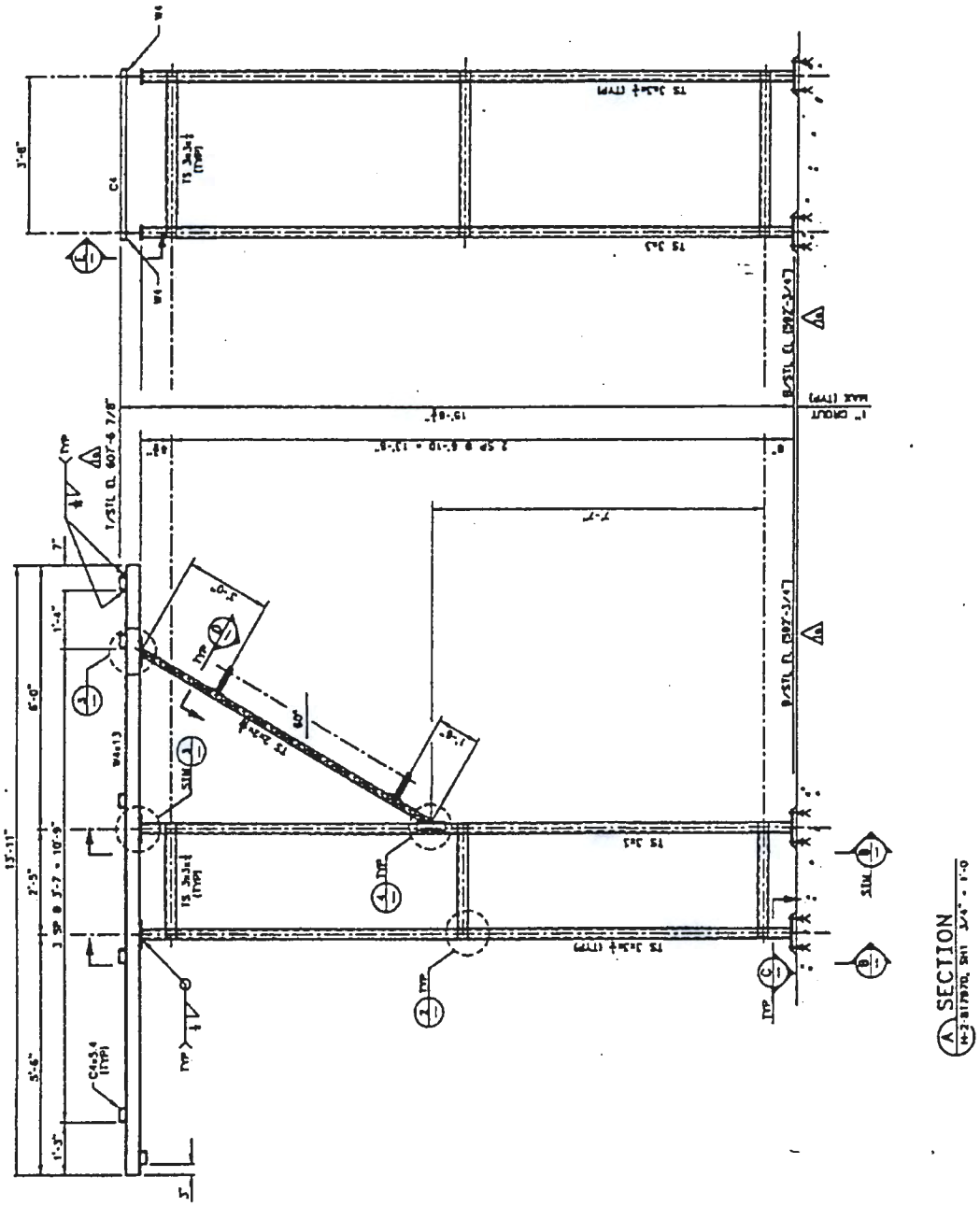

CHANGE TO:

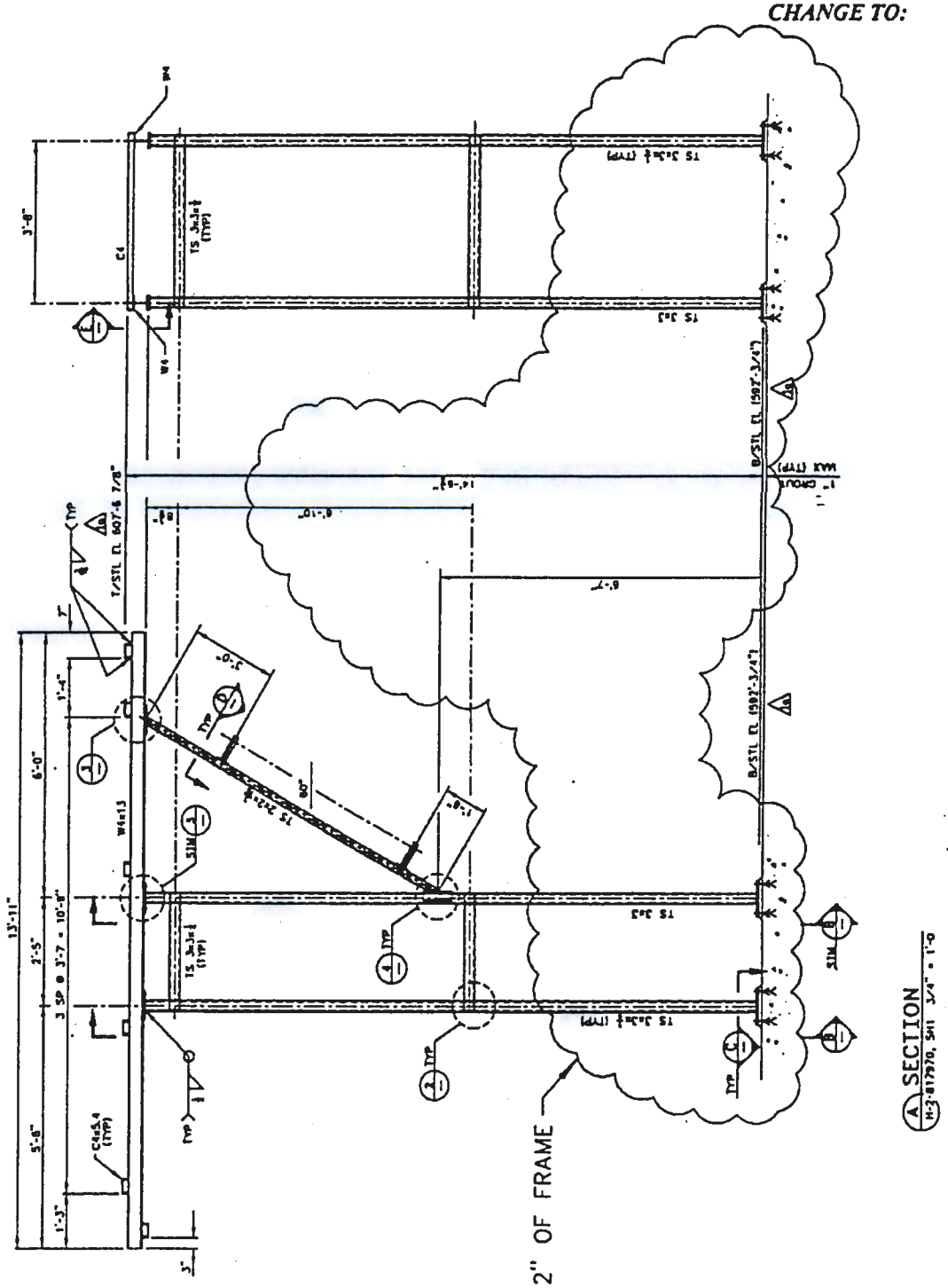
SECTION
H-2-817970, SHT 3/4" = 1'-0
PER ECN 647247:
REMOVE BOTTOM 12" OF FRAME

Block 13a Cont'd
H-2-817975 Sh 1 Rev 5
Zones A3–F5
IS NOW:

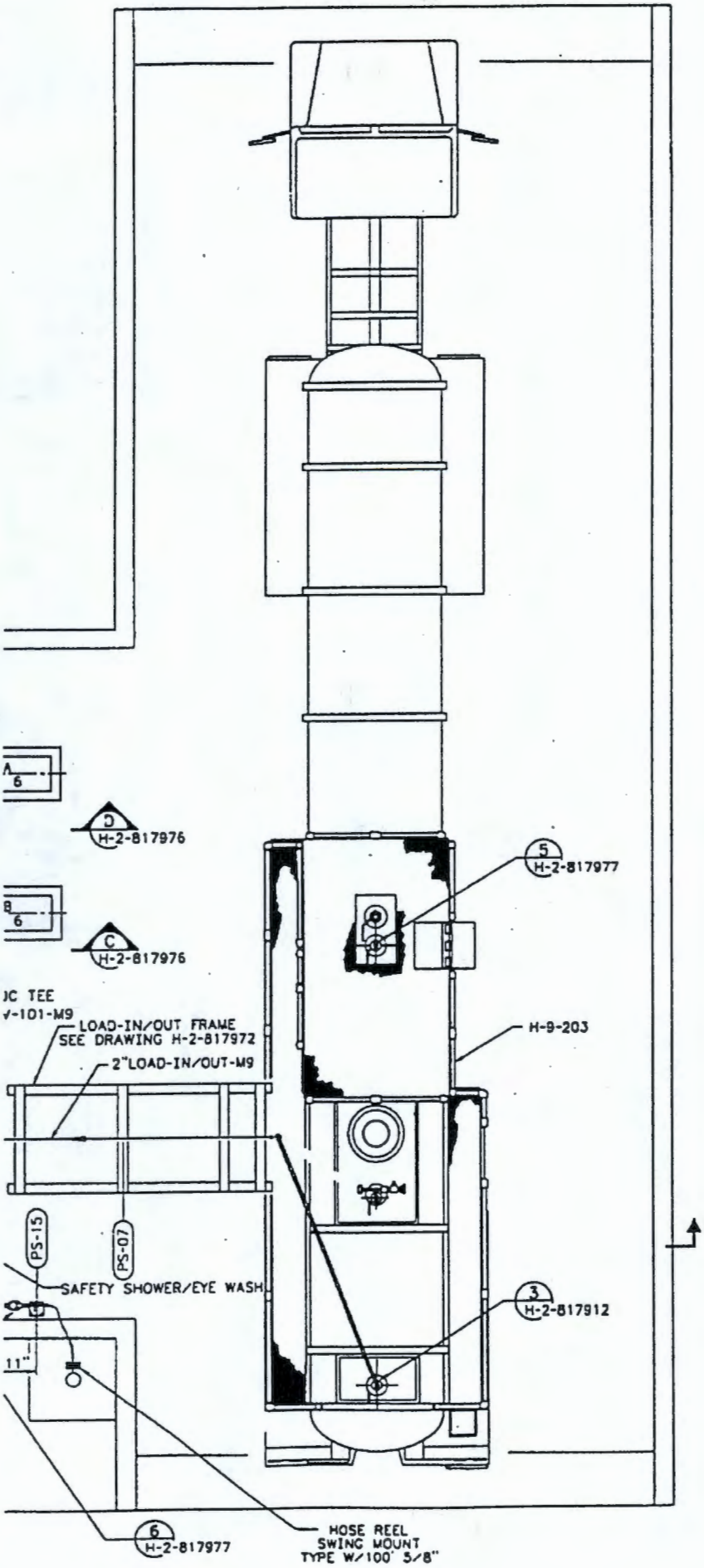

ECN 647247 – 8/27/98
Page 8 of 10
Block 13a Cont'd
H-2-817975 Sh 1 Rev 5
Zones A3–F5
CHANGE TO:

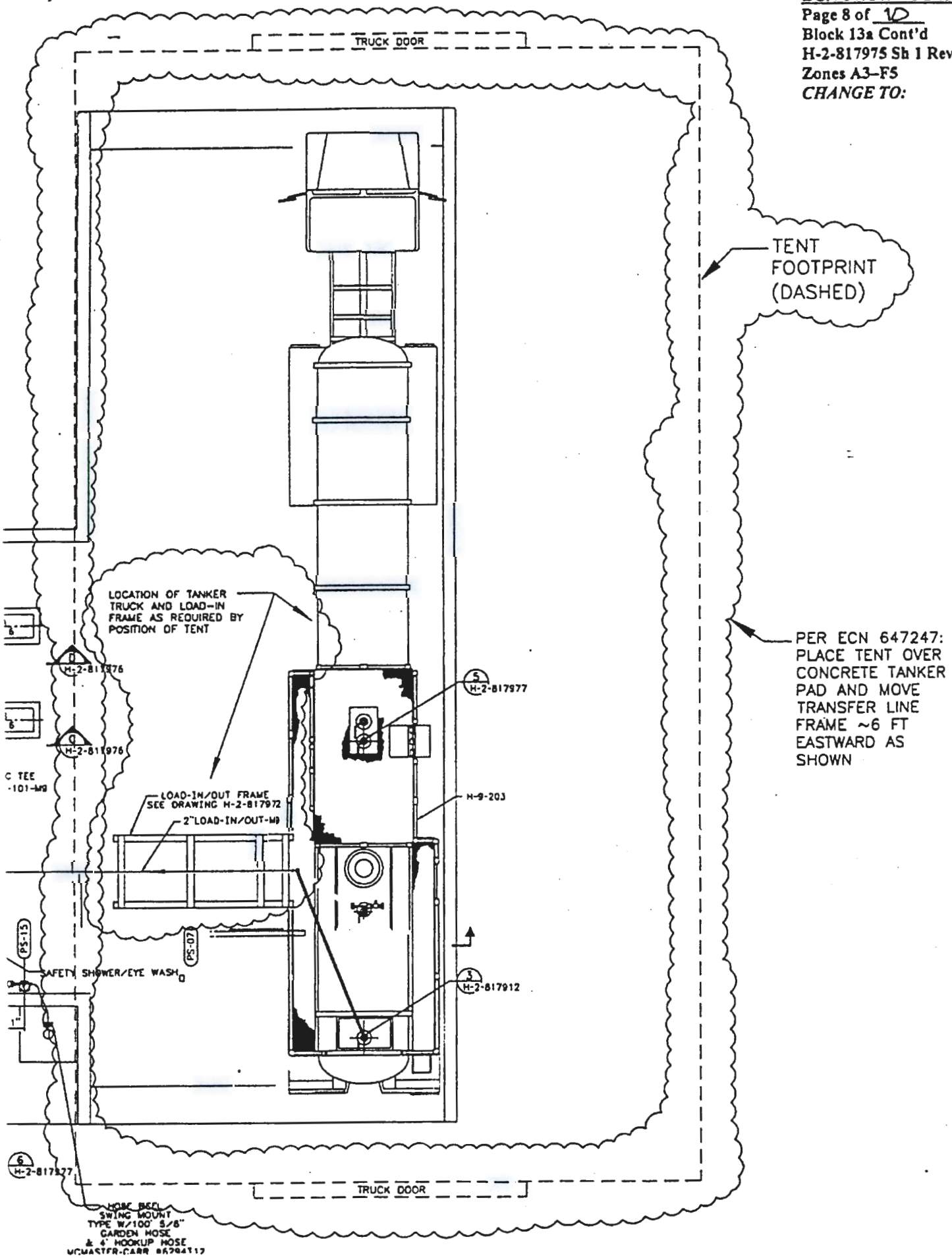

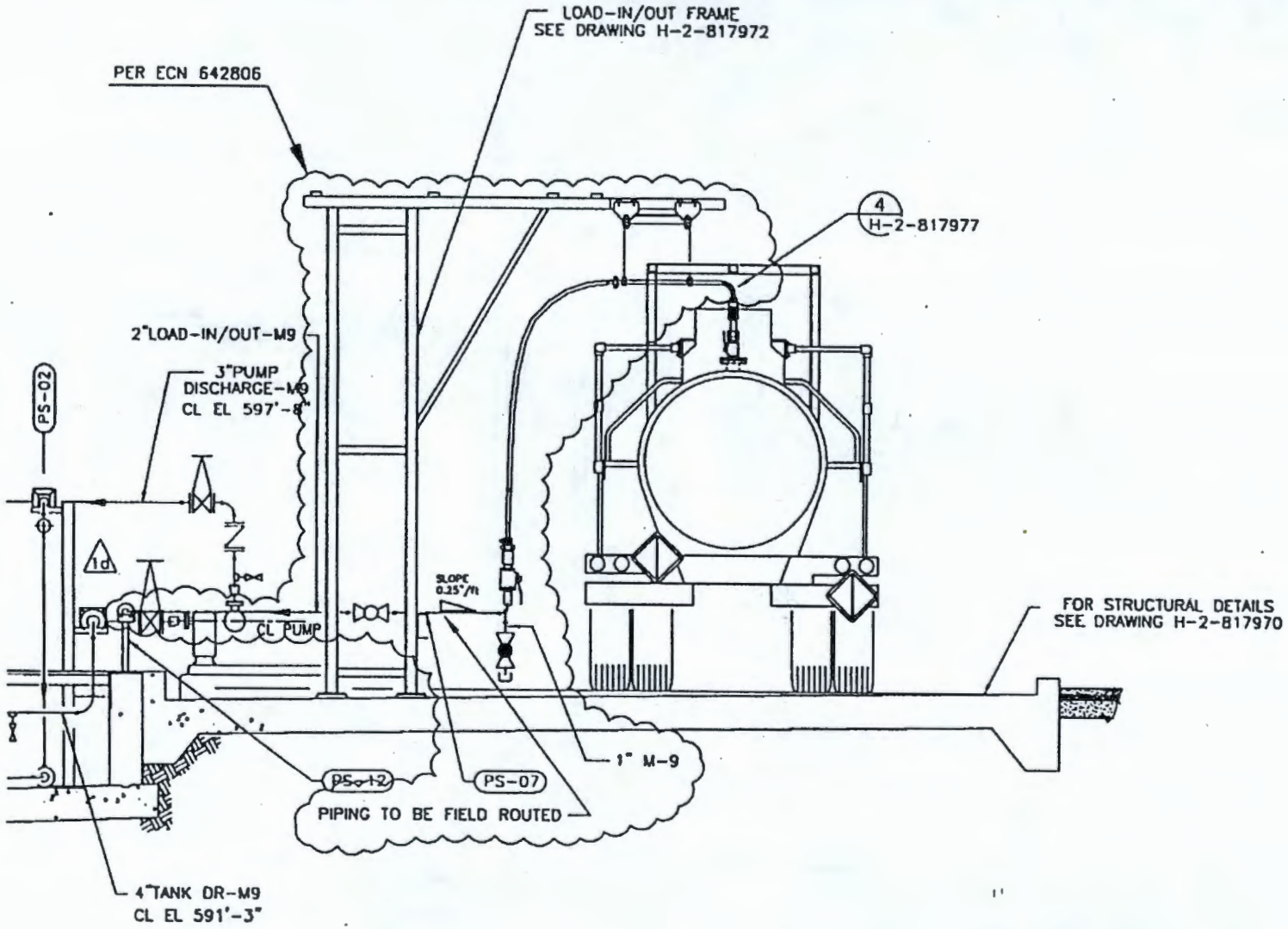

B SECTION
H-2-817975 SCALE: 3/8"=1'-0"

ECN 647247 – 8/27/98
Page 9 of 12
Block 13a Cont'd
H-2-817976 Sh 1 Rev 1
Zones A4-D6
IS NOW:

PER ECN 647247:
1. SHORTEN SUPPORT FRAME BY 1 FT
2. MOVE FRAME ~6 FT TOWARD TANKER
3. EXTEND TRANSFER LINE BY ~6 FT TO MATCH
4. ADD NEW TRANSFER LINE PIPE SUPPORT
5. INSTALL TENT AS SHOWN BY DASHED OUTLINE
6. TANKER WILL BE POSITIONED NEAR OUTER EDGE OF PAD FOR FUTURE LOAD-IN OPERATIONS

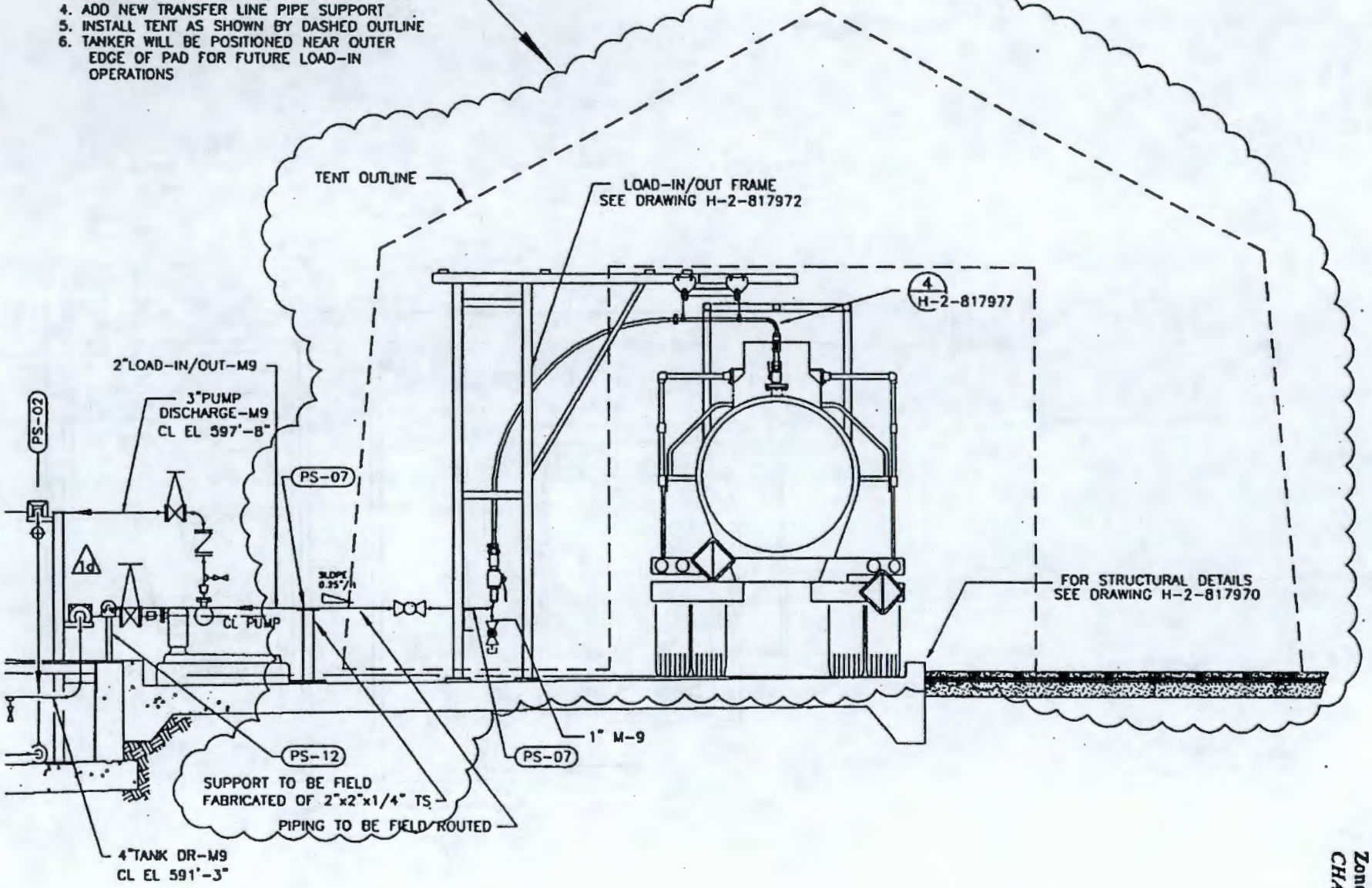

B SECTION
H-2-817975 SCALE: 3/8"=1'-0"

ECN 647247 – 8/27/98
Page 10 of 10
Block 13a Cont'd
H-2-817976 Sh 1 Rev 1
Zones A4–D6
CHANGE TO:

cpf 18
1pf 1 cs

ENGINEERING CHANGE NOTICE ESSENTIAL

Page 1 of 15

1. ECN 649112

Proj. ECN

2. ECN Category (mark one)	3. Originator's Name, Organization, MSIN, and Telephone No.	4. USQ Required?	5. Date
Supplemental [] Direct Revision [] Change ECN [] Temporary [] Standby [] Supersedure [x] Cancel/Void []	AF Crane, 32910, S6-72, 372-3152	[] Yes [x] No	05/03/99
	6. Project Title/No./Work Order No. Truck Load-in Filter/CACN 106883 COA EK00	7. Bldg./Sys./Fac. No. ~~2025E~~/59A/ETF 2025EC 5/10/99	8. Approval Designator E
	9. Document Numbers Changed by this ECN (includes sheet no. and rev.) See Block 13a	10. Related ECN No(s). 647250L 647275 648796	11. Related PO No. N/A

12a. Modification Work	12b. Work Package No.	12c. Modification Work Complete	12d. Restored to Original Condition (Temp. or Standby ECN only)
[x] Yes (fill out Blk. 12b) [] No (NA Blks. 12b, 12c, 12d)	EL-99-00071/M	DEC 07 1999 (18) STA. 30 12/6/99 Design Authority/Cog. Engineer Signature & Date	N/A Design Authority/Cog. Engineer Signature & Date

13a. Description of Change

13b. Design Baseline Document? [x] Yes [] No

This ECN supercedes ECN 647275.

Affected Drawings

H-2-817968, Sh 1, Rev ~~3~~ 4 aac
H-2-817974, Sh 1 Rev ~~9~~ 10 5/6/99
H-2-817975, Sh 1 Rev 6
H-2-817976, Sh 1 Rev 2

See attached continuation sheet for description of changes.

Piping, fittings and jointing methods shall meet the requirements of pipe code M9 in accordance with construction specification W-291H-C2. Install, inspect and test the new piping installation in accordance with ASME B31.3 and Addenda for Category D fluid service.

14a. Justification (mark one)

Criteria Change	[x]	Design Improvement	[]	Environmental	[]	Facility Deactivation	[]
As-Found	[]	Facilitate Const	[]	Const. Error/Omission	[]	Design Error/Omission	[]

14b. Justification Details

Supplemental offload and filtration capability is required to simultaneously accept liquid wastes containing solids while receiving existing waste generator shipments.

Informal design review performed by EA McNamar

15. Distribution (include name, MSIN, and no. of copies)

MW Bowman	S6-72 (1)	JM Isdell	B4-39 (1)*	NJ Sullivan	S6-72 (1)
AF Crane	S6-72 (1)*	~~EA McNamar~~	~~S6-72 (1)~~	WCC Planning	S6-71 (1)*
~~DL Flyckt~~	~~S6-72 (1)~~	CD Skogley	T4-05 (1)	(* = 1 Advance Copy)	
RJ Huth	S6-72 (1)	DK Smith	S6-71 (1)		
JO Gordon	S6-72 (1)*				
CM Towne	S6-74 (1)*				

RELEASE STAMP
MAY 10 1999
DATE: HANFORD RELEASE
STA: 30 ID: 18

ENGINEERING CHANGE NOTICE	Page 2 of ~~14~~ 15	1. ECN 649112

16. Design Verification Required	17. Cost Impact ——> NA <—— ENGINEERING		CONSTRUCTION		18. Schedule Impact (days) ——> NA <——	
[X] Yes	Additional	[] $	Additional	[] $	Improvement	[]
[] No	Savings	[] $	Savings	[] $	Delay	[]

19. Change Impact Review: Indicate the related documents (other than the engineering documents identified on Side 1) that will be affected by the change described in Block 13. Enter the affected document number in Block 20.

SDD/DD	[NA]	Seismic/Stress Analysis	[NA]	Tank Calibration Manual	[NA]
Functional Design Criteria	[NA]	Stress/Design Report	[NA]	Health Physics Procedure	[NA]
Operating Specification	[NA]	Interface Control Drawing	[NA]	Spares Multiple Unit Listing	[NA]
Criticality Specification	[NA]	Calibration Procedure	[NA]	Test Procedures/Specification	[NA]
Conceptual Design Report	[NA]	Installation Procedure	[NA]	Component Index	[X]
Equipment Spec.	[NA]	Maintenance Procedure	[NA]	ASME Coded Item	[NA]
Const. Spec	[NA]	Engineering Procedure	[NA]	Human Factor Consideration	[NA]
Procurement Spec.	[NA]	Operating Instruction	[NA]	Computer Software	[NA]
Vendor Information	[X]	Operating Procedure	[X]	Electric Circuit Schedule	[NA]
OM Manual	[NA]	Operational Safety Requirement	[NA]	ICRS Procedure	[NA]
FSAR/SAR	[NA]	IEFD Drawing	[NA]	Process Control Manual/Plan	[NA]
Safety Equipment List	[NA]	Cell Arrangement Drawing	[NA]	Process Flow Chart	[NA]
Radiation Work Permit	[NA]	Essential Material Specification	[NA]	Purchase Requisition	[NA]
Environmental Impact Statement	[NA]	Fac. Proc. Surep. Schedule	[NA]	Tickler File	[NA]
Environmental Report	[NA]	Inspection Plan	[NA]		[]
Environmental Permit	[NA]	Inventory Adjustment Request	[NA]		[]

20. Other Affected Documents: (NOTE: Documents listed below will not be revised by this ECN.) Signatures below indicate that the signing organization has been notified of other affected documents listed below.

Document Number/Revision	Document Number/Revision	Document Number Revision
POP-59A-001, Rev X-4		

21. Approvals

	Signature	Date		Signature	Date
Design Authority AF Crane	AF Crane	5-3-99	Design Agent AF Crane	AF Crane	5-3-99
Cog. Eng.			PE		
Cog. Mgr. NJ Sullivan	NJ Sullivan	5-5-99	QA		
QA			Safety		
Safety			Design		
Environ. DL Flyckt	[illegible]	5-3-99	Environ.		
Other			Other		
Operations DK Smith	DK S	5-6-99			
EA McNamar	EA McNamar	5/4/99			
Informal Design Review					
		3MAY99	DEPARTMENT OF ENERGY		
			Signature or a Control Number that tracks the Approval Signature		
			ADDITIONAL		

H-2-817968, Sh 1, Rev 3

Zones C-6/8: Add drawings H-2-817974, Sh 2 and H-2-817976, Sh 2 to drawing list.

H-2-817974, Sh 1 Rev 9

Zone A-1: Change sheet numbering from "1 OF 1" to "1 OF 2".

Zones A-5/7: Modify Motorized Valve Operation Sequence Table

Zones B/D-1/3: Add piping 1"-59A-007-M9 & 3"-59A-003-M9, 2" flex hose and drawing matchlines & text.

Zones C/E-3/8: Drawing change only. Revise existing piping configuration to more closely match field conditions.

Zones D-5: Drawing change only. Add line labels 3"-59A-004-M9 & 3"-59A-006-M9.

Zones C/D-5/6: Add piping 3"-59A-002-M9 & 3"-59A-005-M9 with matchline & text. Add valves 59A-019, 59A-023, 59A-024, 59A-025, 59A-026, 59A-027, 59A-028, 59A-029, 59A-055, 59A-056, 59A-058 & 59A-059. Add two 3" M9 bypass lines between pump discharge lines with two connecting lines from the last bypass line to lines 3"-59A-004-M9 and 3"-59A-009-M9

Zones D-7: Add valve 59A-060.

Zones D-7/8: Add piping 2"-59A-008-M9.

Zones D/F-8: Add drawing matchline.

Zones E-5: Drawing change only. Add line label 3"-59A-009-M9.

Sheet 2: Add sheet 2 as shown on page 9 of this ECN.

H-2-817975, Sh 1 Rev 5

Zones C-1/2: Add note 9.

Zones A/E-4/7: Add new/revised piping and equipment as shown.

H-2-817976, Sh 1 Rev 2

Zone A-1: Change sheet numbering from "1 OF 1" to "1 OF 2".

Zones A/B-6/8: Add new/revised piping and equipment as shown.

Zone D-2/3: Add new/revised piping and equipment as shown. Changes per ECN 649115 shown for clarification only.

Zones D/F-5/8: Add new/revised piping and equipment as shown.

Zone F-2/3: Add new/revised piping and equipment as shown. Changes per ECN 649115 shown for clarification only.

Sheet 2: Add sheet 2 as shown on page 14 of this ECN.

PROJECT TITLE:

W-291H 200 AREA EFFLUENT BAT/AKART IMPLEMENTATION WORK PKG NO 3. ETF TRUCK LOAD-IN STATION LOCATION PLAN / DRAWING LIST

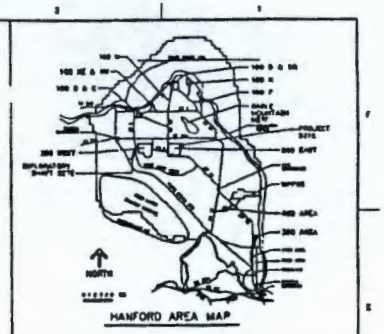

HANFORD AREA MAP

DRAWING LIST

CIVIL

DRAWING NO	INDEX NO	TITLE
H-2-817966	0000/0110	ETF TRUCK LOAD-IN STATION LOCATION PLAN & DWG LIST
H-2-817966 SH 1	0100	CIVIL ETF TRUCK LOAD-IN STATION SITE PLAN
H-2-817966 SH 2	0301/0304	CIVIL ETF TRUCK LOAD-IN STATION PLAN AND PROFILES
H-2-817966 SH 3	0110	CIVIL ETF TRUCK LOAD-IN STATION ENLARGED PLAN
H-2-817966 SH 4	0900	CIVIL ETF TRUCK LOAD-IN STATION MISCELLANEOUS DETAILS
H-2-817966 SH 5	0900	CIVIL ETF TRUCK LOAD-IN STATION MISCELLANEOUS DETAILS
H-2-817970 SH 1	0900	STRUCTURAL ETF TRUCK LOAD-IN STATION PLAN & SECTIONS
H-2-817970 SH 2	0900/0901	STRUCTURAL ETF TRUCK LOAD-IN STATION SECTIONS & DETAILS
H-2-817971 SH 1	1000	STRUCTURAL ETF TRUCK LOAD-IN STATION STEEL PLAN & SECTIONS
H-2-817971 SH 2	1000	STRUCTURAL ETF TRUCK LOAD-IN STATION STEEL DETAILS
H-2-817972	1000	STRUCTURAL ETF TRUCK LOAD-IN STATION SECTIONS & DETAILS
H-2-817973	1000	STRUCTURAL ETF TRUCK LOAD-IN STATION MISC SECTIONS AND DETAILS

PIPING

DRAWING NO	INDEX NO	TITLE
H-2-817974	7004	P&ID ETF TRUCK LOAD-IN STATION
H-2-817975	0400	PIPING ETF TRUCK LOAD-IN STATION PLAN
H-2-817976	0401	PIPING ETF TRUCK LOAD-IN STATION SECTIONS AND DETAILS
H-2-817977	0401	PIPING ETF TRUCK LOAD-IN STATION DETAILS
H-2-817978	0511	PIPING ETF TRUCK LOAD-IN STATION PIPE SUPPORTS
H-2-817979	0100	PIPING ETF SOUTH YARD PLAN & SECTIONS

INSTRUMENTATION

DRAWING NO	INDEX NO	TITLE
H-2-817980	7004	INSTRUMENTATION ETF TRUCK LOAD-IN STATION LEGEND & SYMBOLS
H-2-817981 1 SH	9003	INSTRUMENTATION ETF TRUCK LOAD-IN STATION LOOP DIAGRAM
H-2-817982	7003	INSTRUMENTATION ETF TRUCK LOAD-IN STATION LOGIC DIAGRAM
H-2-817983 1 SH	9003	INSTRUMENTATION LOV BOXES
H-2-817980 2 SH	9001	INSTRUMENTATION ETF TRUCK LOAD-IN STATION SECTIONS AND DETAILS

ELECTRICAL

DRAWING NO	INDEX NO	TITLE
H-2-817967 SH 1	7301	ELECTRICAL ETF TRUCK LOAD-IN STATION SITE PLAN
H-2-817967 SH 2	9003/0	
H-2-817967 SH 3 & 4	7301	ELECTRICAL ETF TRUCK LOAD-IN STATION SECTIONS & DETAILS
H-2-817968 SH 1	7301/7301/7304	ELECTRICAL ETF TRUCK LOAD-IN STATION PLAN, ONE-LINE & DETAILS
H-2-817968 SH 2	7301/9300	ELECTRICAL ETF TRUCK LOAD-IN STATION PLAN, HVD & HEAT TRACING
H-2-817968 SH 3	7301/7301/7304	ELECTRICAL ETF TRUCK LOAD-IN STATION PANEL SCHEDULE & DETAILS
H-2-817969	7301/7304	ELECTRICAL ETF TRUCK LOAD-IN STATION ELEMENTARY DIAGRAM
H-2-817969	7305/7306	ELECTRICAL ETF TRUCK LOAD-IN STATION WIRE & CONDUIT SCHEDULE
H-2-817991 1 SH	7001	ELECTRICAL ETF TRUCK LOAD-IN STATION TELECOMMUNICATIONS

SPECIFICATIONS

W-291H-CS	CONSTRUCTION SPECIFICATION
W-291H-P1	PROCUREMENT SPECIFICATION - PROCESS INSTRUMENTS
W-291H-P2	PROCUREMENT SPECIFICATION - CENTRIFUGAL PUMPS
W-291H-P3	PROCUREMENT SPECIFICATION - ATMOSPHERIC TANKS
W-291H-P4	PROCUREMENT SPECIFICATION - INSTRUMENT PANELS

CALCULATIONS

PROJECT/JOB CALCULATIONS MASTER INDEX FOR PROJECT W-291H
E65229-C-01, FLOW ANALYSIS FROM ETF TRUCK LOAD-IN STATION TO LERF
E65229-E-1, ETF TO LERF JUMPER ANALYSIS

ATP

WHC-SD-W291H-ATP-003

NORTH

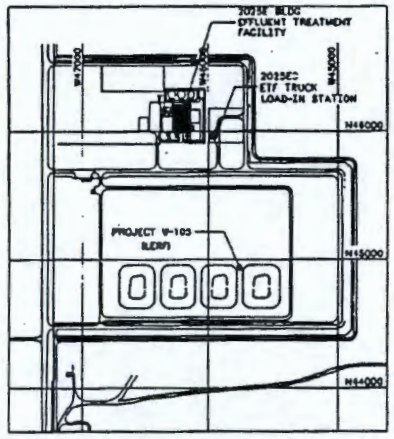

ECN 649112 PG 5 of 15
H-2-817966, SH 1

BEST AVAILABLE COPY

ESSENTIAL DRAWING

DEPARTMENT OF ENERGY
ETF
TRUCK LOAD-IN STATION
LOCATION PLAN / DWG LIST
H-2-817966

PROJECT TITLE:

W-291H 200 AREA EFFLUENT BAT/AKART IMPLEMENTATION WORK PKG NO 3. ETF TRUCK LOAD-IN STATION LOCATION PLAN / DRAWING LIST

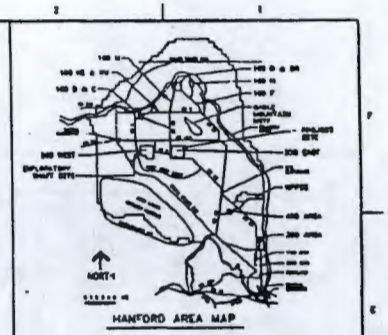

DRAWING LIST

CIVIL

DRAWING NO	INDEX NO	TITLE
H-2-817966	0000/0010	ETF INDEX LOAD-IN STATION LOCATION PLAN & DWG LIST
H-2-817968 SH 1	0100	CIVIL ETF TRUCK LOAD-IN STATION SITE PLAN
H-2-817968 SH 2	0301/0304	CIVIL ETF TRUCK LOAD-IN STATION PLAN AND PROFILES
H-2-817968 SH 3	0410	CIVIL ETF TRUCK LOAD-IN STATION ENLARGED PLAN
H-2-817968 SH 4	0200	CIVIL ETF TRUCK LOAD-IN STATION MISCELLANEOUS DETAILS
H-2-817968 SH 5	0500	CIVIL ETF TRUCK LOAD-IN STATION MISCELLANEOUS DETAILS
H-2-817970 SH 1	0600	STRUCTURAL ETF TRUCK LOAD-IN STATION PLAN & SECTIONS
H-2-817970 SH 2	0600/0601	STRUCTURAL ETF TRUCK LOAD-IN STATION SECTIONS & DETAILS
H-2-817971 SH 1	1000	STRUCTURAL ETF TRUCK LOAD-IN STATION STEEL PLAN & SECTIONS
H-2-817971 SH 2	1000	STRUCTURAL ETF TRUCK LOAD-IN STATION STEEL DETAILS
H-2-817972	1000	STRUCTURAL ETF TRUCK LOAD-IN STATION SECTIONS & DETAILS
H-2-817973	1000	STRUCTURAL ETF TRUCK LOAD-IN STATION MISC SECTIONS AND DETAILS

PIPING

DRAWING NO	INDEX NO	TITLE
H-2-817974 SH 1	7004	PAID ETF TRUCK LOAD-IN STATION
H-2-817974 SH 2	7004	PAID ETF TRUCK LOAD-IN STATION
H-2-817976	0400	PIPING ETF TRUCK LOAD-IN STATION PLAN
H-2-817976 SH 1	0601	PIPING ETF TRUCK LOAD-IN STATION SECTIONS AND DETAILS
H-2-817976 SH 2	0601	PIPING ETF TRUCK LOAD-IN STATION SECTIONS AND DETAILS
H-2-817977	0601	PIPING ETF TRUCK LOAD-IN STATION DETAILS
H-2-817978	0611	PIPING ETF TRUCK LOAD-IN STATION PIPE SUPPORTS
H-2-817979	0100	PIPING ETF SOUTH YARD PLAN & SECTIONS

INSTRUMENTATION

DRAWING NO	INDEX NO	TITLE
H-2-817980	7004	INSTRUMENTATION ETF TRUCK LOAD-IN STATION LEGEND & SYMBOLS
H-2-817981 2 SH	7003	INSTRUMENTATION ETF TRUCK LOAD-IN STATION LOOP DIAGRAM
H-2-817982	7003	INSTRUMENTATION ETF TRUCK LOAD-IN STATION LOGIC DIAGRAM
H-2-817983 2 SH	2003	INSTRUMENTATION LOP TRAIL
H-2-817985 2 SH	2001	INSTRUMENTATION ETF TRUCK LOAD-IN STATION SECTIONS AND DETAILS

ELECTRICAL

DRAWING NO	INDEX NO	TITLE
H-2-817987 SH 1	7301	ELECTRICAL ETF TRUCK LOAD-IN STATION SITE PLAN
H-2-817987 SH 2	VOIDED	
H-2-817987 SH 3 & 4	7301	ELECTRICAL ETF TRUCK LOAD-IN STATION SECTIONS & DETAILS
H-2-817988 SH 1	7301/7301/7304	ELECTRICAL ETF TRUCK LOAD-IN STATION PLAN, ONELINE & DETAILS
H-2-817988 SH 2	7301/7300	ELECTRICAL ETF TRUCK LOAD-IN STATION PLAN, GND & HEAT TRACING
H-2-817988 SH 3	7301/7301/7304	ELECTRICAL ETF TRUCK LOAD-IN STATION PANEL SCHEDULE & DETAILS
H-2-817989	7301/7300	ELECTRICAL ETF TRUCK LOAD-IN STATION ELEMENTARY DIAGRAM
H-2-817990	7300/7946	ELECTRICAL ETF TRUCK LOAD-IN STATION WIRE & CONDUIT SCHEDULE
H-2-817991 1 SH	7001	ELECTRICAL ETF TRUCK LOAD-IN STATION TELECOMMUNICATIONS

SPECIFICATIONS

W-291H-C2	CONSTRUCTION SPECIFICATION
W-291H-P1	PROCUREMENT SPECIFICATION - PROCESS INSTRUMENTS
W-291H-P2	PROCUREMENT SPECIFICATION - CENTRIFUGAL PUMPS
W-291H-P3	PROCUREMENT SPECIFICATION - ATMOSPHERIC TANKS
W-291H-P4	PROCUREMENT SPECIFICATION - INSTRUMENT PANELS

CALCULATIONS

PROJECT/JOB CALCULATIONS MASTER INDEX FOR PROJECT W-291H
E45139-C-01, FLOW ANALYSIS FROM ETF TRUCK LOAD-IN STATION TO LERF
E45139-M-1, ETF TO LERF JUMPER ANALYSIS

ATP

WHC-SD-W291H-ATP-003

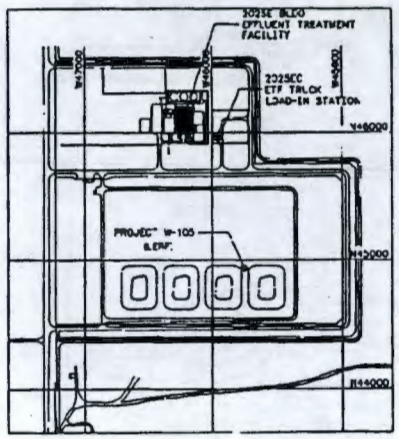

Is
ECN 649112 pg 6 of 15
H-2-817968, SH 1

CT AVAILABLE COPY

ESSENTIAL DRAWING

U.S. DEPARTMENT OF ENERGY
RICHLAND OPERATIONS OFFICE
WESTINGHOUSE HANFORD COMPANY
ETF
TRUCK LOAD-IN STATION
LOCATION PLAN / DWG LIST
H-2-817966

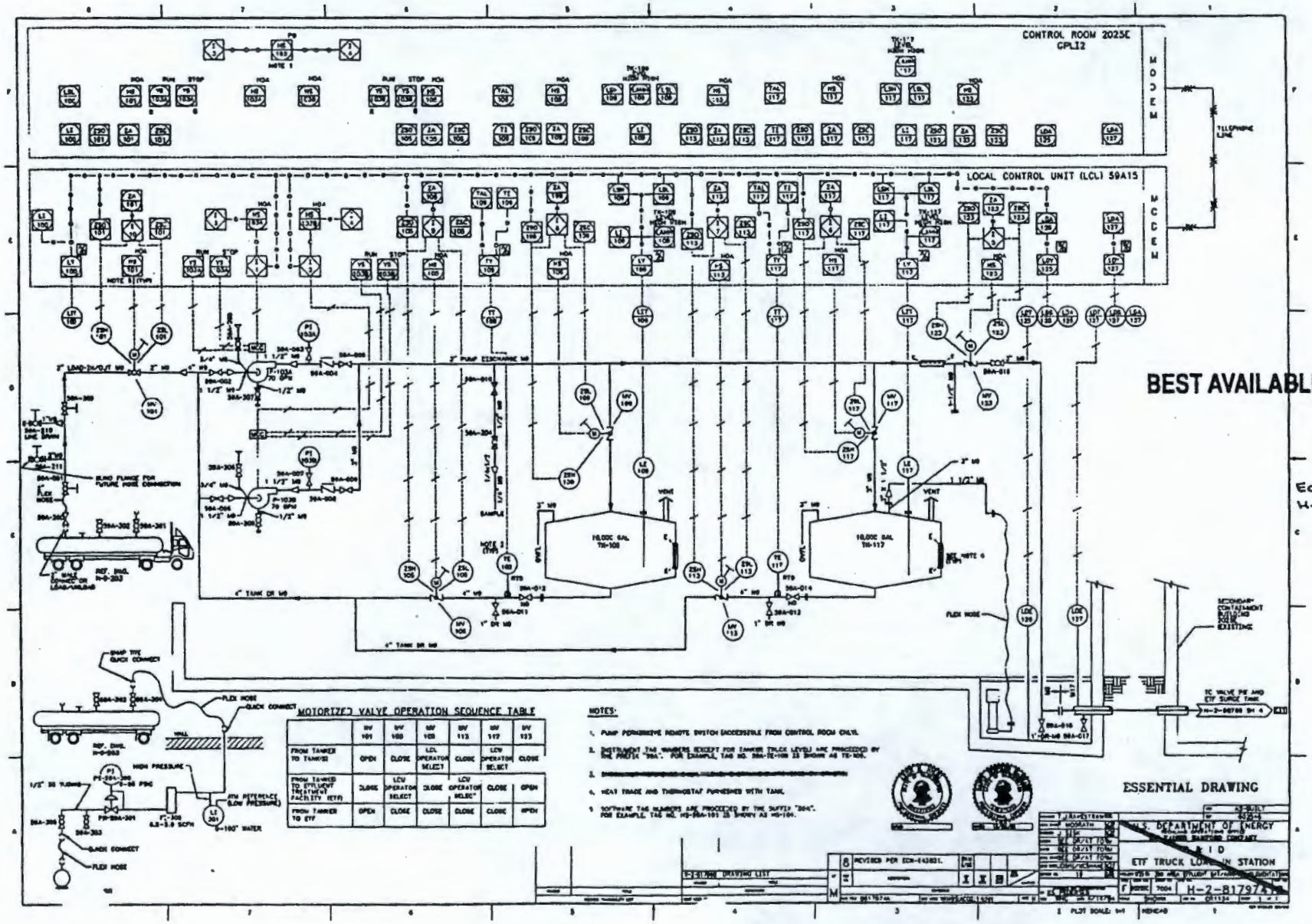

BEST AVAILABLE COPY

ECN 649112 pg 7 of 15
H-2-817974, SH 1

MOTORIZED VALVE OPERATION SEQUENCE TABLE

	SV 101	SV 105	SV 109	SV 113	SV 117	SV 123
FROM TANKER TO TANK(S)	OPEN	CLOSE	LCV OPERATOR SELECT	CLOSE	LCV OPERATOR SELECT	CLOSE
FROM TANKER TO EFFLUENT TREATMENT FACILITY (ETF)	CLOSE	LCV OPERATOR SELECT	CLOSE	LCV OPERATOR SELECT	CLOSE	OPEN
FROM TANKER TO ETF	OPEN	CLOSE	CLOSE	CLOSE	CLOSE	OPEN

NOTES:

1. PUMP PERMISSIVE REMOTE SWITCH (ACCESSIBLE FROM CONTROL ROOM ONLY).
2. INSTRUMENT TAG NUMBERS (EXCEPT FOR TANKER TRUCK LEVEL) ARE PREFIXED BY THE PREFIX "59A". FOR EXAMPLE, TAG NO. 59A-TE-108 IS SHOWN AS TE-108.
3. [illegible]
4. HEAT TRACE AND THERMOSTAT FURNISHED WITH TANK.
5. SOFTWARE TAG NUMBERS ARE PREFIXED BY THE SUFFIX "59A". FOR EXAMPLE, TAG NO. HS-59A-101 IS SHOWN AS HS-101.

U.S. DEPARTMENT OF ENERGY
ETF TRUCK LOADING STATION
H-2-817974

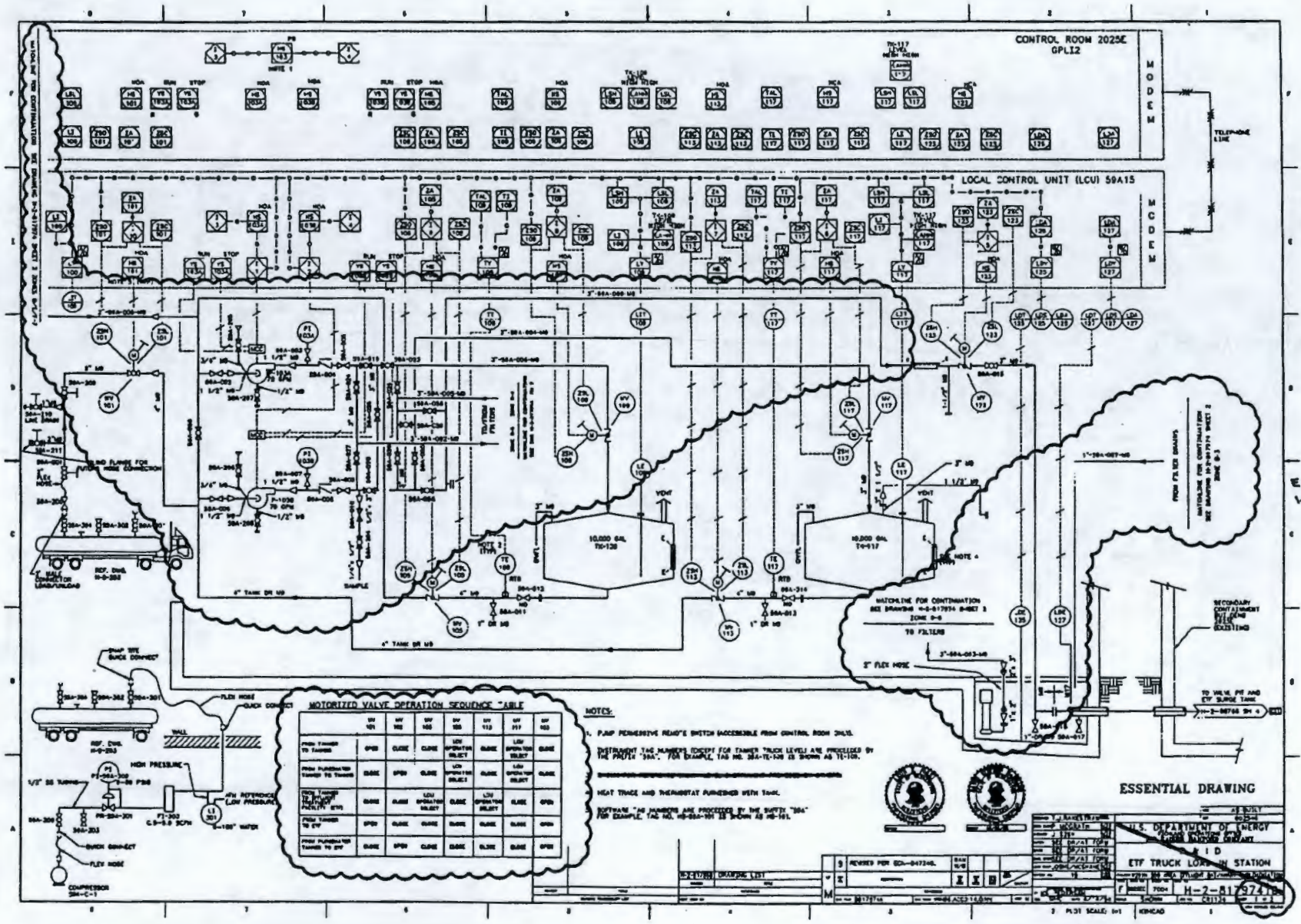

ECN 649112 pg 8 of 15
H-2-817974, SH 1

BEST AVAILABLE COPY

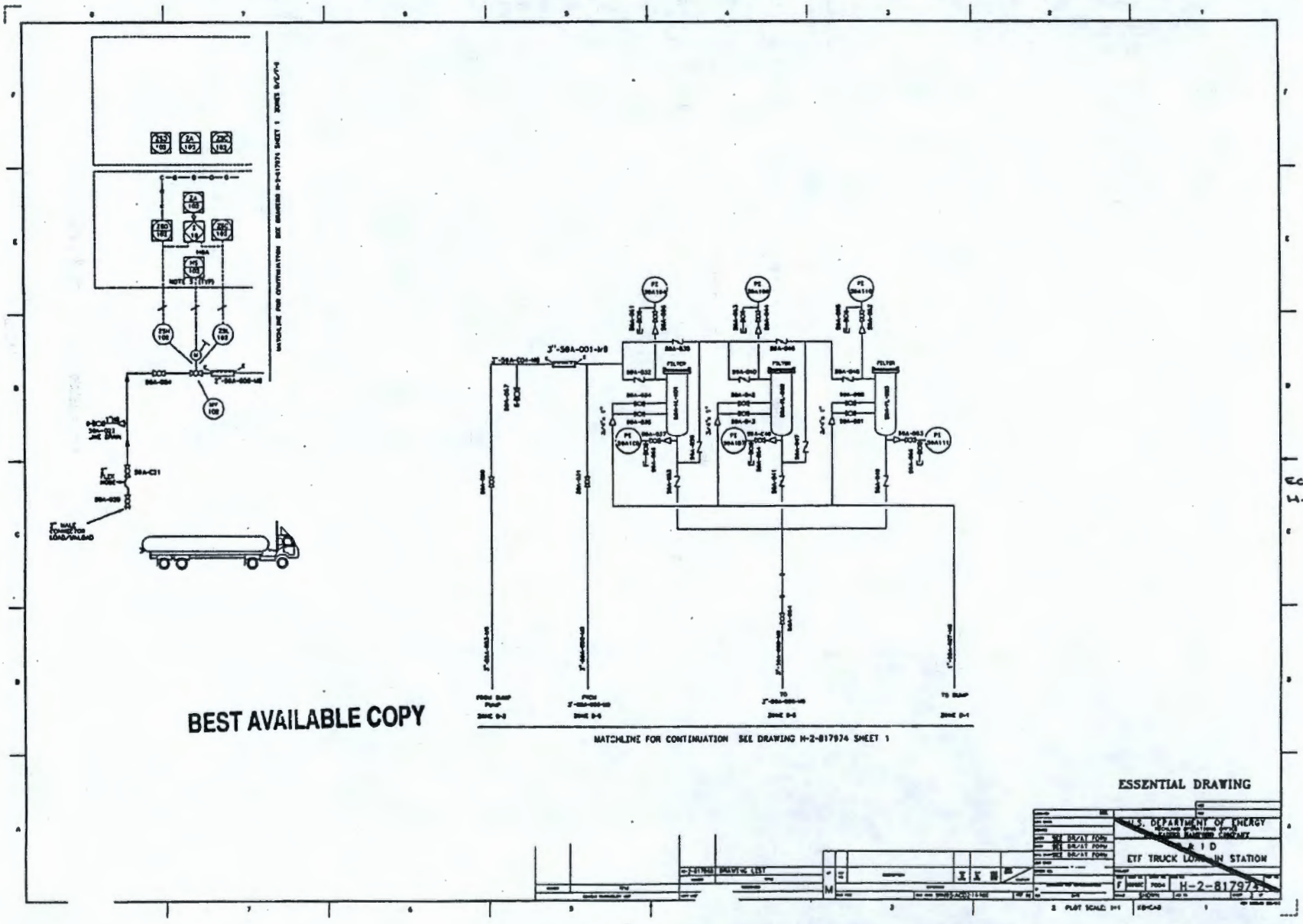

BEST AVAILABLE COPY

ECN 649112 Pg 9 of 15
H-2-817974, SH 2

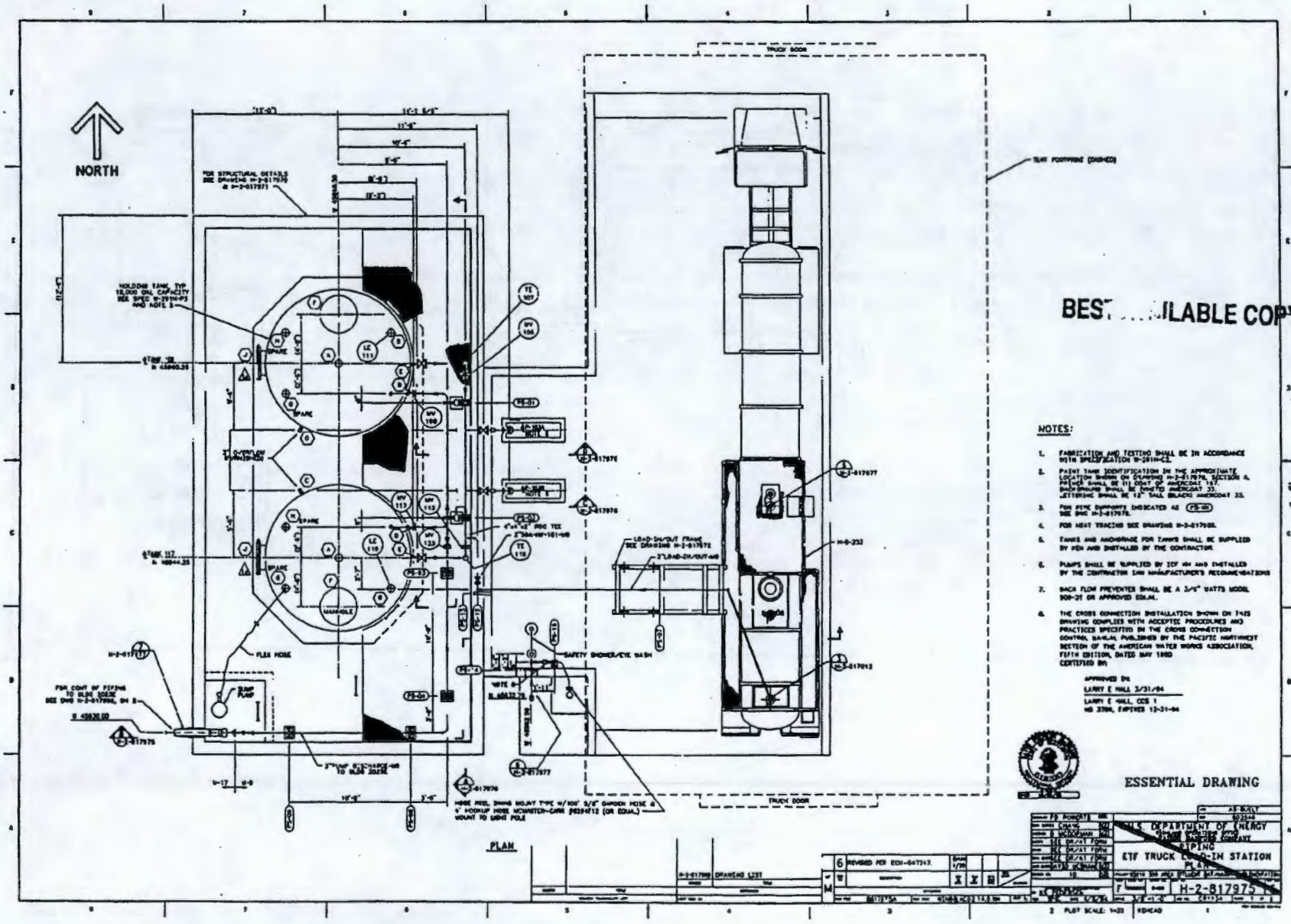
NORTH
TRUCK DOOR
TANK FOOTPRINT (DASHED)
FOR STRUCTURAL DETAILS SEE DRAWING H-2-817976 & H-2-817977
HOLDING TANK TYP 18,000 GAL CAPACITY SEE SPEC W-2914-P3 AND NOTE 5
SPARE
MANHOLE
FLEX HOSE
SUMP PUMP
SAFETY SHOWER/EYE WASH
LOAD-IN/OUT FRAME SEE DRAWING H-2-817972
H-2-817977
H-2-817976
H-2-817975
H-2-817973
H-2-233
PS-01
PS-02
PS-03
PS-04
PS-05
PS-06
PS-07
PS-08
PS-09
PS-10
PS-11
PS-12
PS-13
TT 101
TT 119
SV 104
SV 105
SV 112
SV 113
SV 123
LC 111
LC 118
HOSE REEL SWING MOUNT TYPE W/100' 3/8" GARDEN HOSE & 6' PICKUP HOSE MCMASTER-CARR (9294T12 (OR EQUAL) MOUNT TO LIGHT POLE
PLAN
BEST AVAILABLE COPY
NOTES:
1. FABRICATION AND TESTING SHALL BE IN ACCORDANCE WITH SPECIFICATION W-2914-C2.
2. PAINT TANK IDENTIFICATION IN THE APPROXIMATE LOCATION SHOWN ON DRAWING H-2-817976, SECTION A. PAINTING SHALL BE III COAT OF AMERCOAT 187. SHOWSHOWING SHALL BE UNITED AMERCOAT 33. LETTERING SHALL BE 12" TALL BLACK AMERCOAT 33.
3. FOR PIPE SUPPORTS INDICATED AS PS-00 SEE DWG H-2-817978.
4. FOR HEAT TRACING SEE DRAWING H-2-817985.
5. TANKS AND ANCHORAGE FOR TANKS SHALL BE SUPPLIED BY HDH AND INSTALLED BY THE CONTRACTOR.
6. PUMPS SHALL BE SUPPLIED BY ICF KH AND INSTALLED BY THE CONTRACTOR (AND MANUFACTURER'S RECOMMENDATIONS
7. BACK FLOW PREVENTER SHALL BE A 3/4" WATTS MODEL 909-2T OR APPROVED EQUAL.
8. THE CROSS CONNECTION INSTALLATION SHOWN ON THIS DRAWING COMPLIES WITH ACCEPTED PROCEDURES AND PRACTICES SPECIFIED IN THE CROSS CONNECTION CONTROL MANUAL PUBLISHED BY THE PACIFIC NORTHWEST SECTION OF THE AMERICAN WATER WORKS ASSOCIATION, FIFTH EDITION, DATED MAY 1989
CERTIFIED BY:
APPROVED BY:
LARRY E HALL 3/31/94
LARRY E HALL, CCS 1
WS 3784, EXPIRES 12-31-94
ESSENTIAL DRAWING
U.S. DEPARTMENT OF ENERGY
RICHLAND OPERATIONS OFFICE
WESTINGHOUSE HANFORD COMPANY
PIPING
ETF TRUCK LOAD-IN STATION
PLAN
H-2-817975
REVISED PER ECN-649112
DRAWING LIST
PLOT SCALE: 1=20
ECN 649112 pg 10 of 15
H-2-817975, SH 1

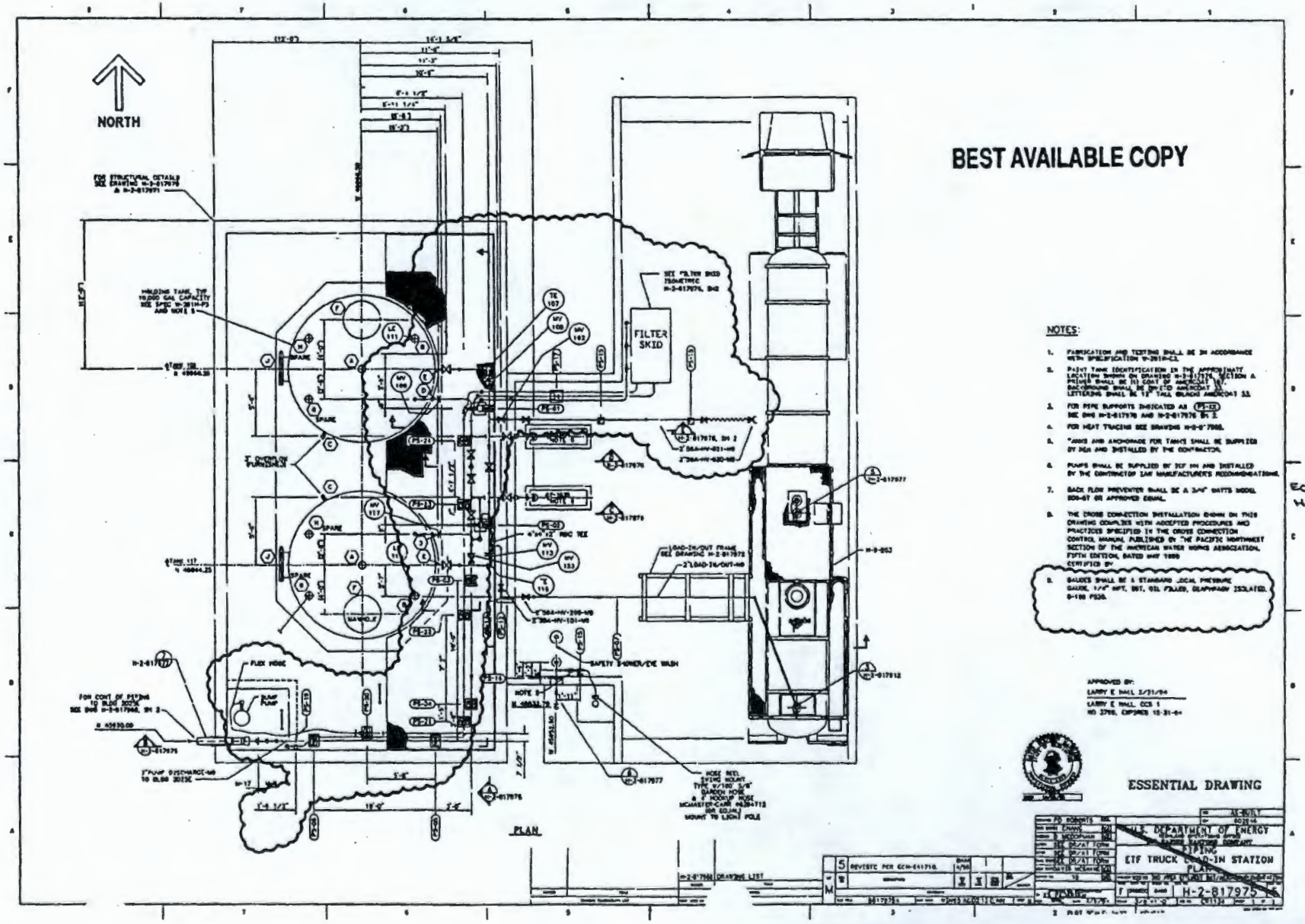

BEST AVAILABLE COPY

To
ECN 649112 Pg 11 of 15
H-2-817975, SH 1

BEST AVAILABLE COPY

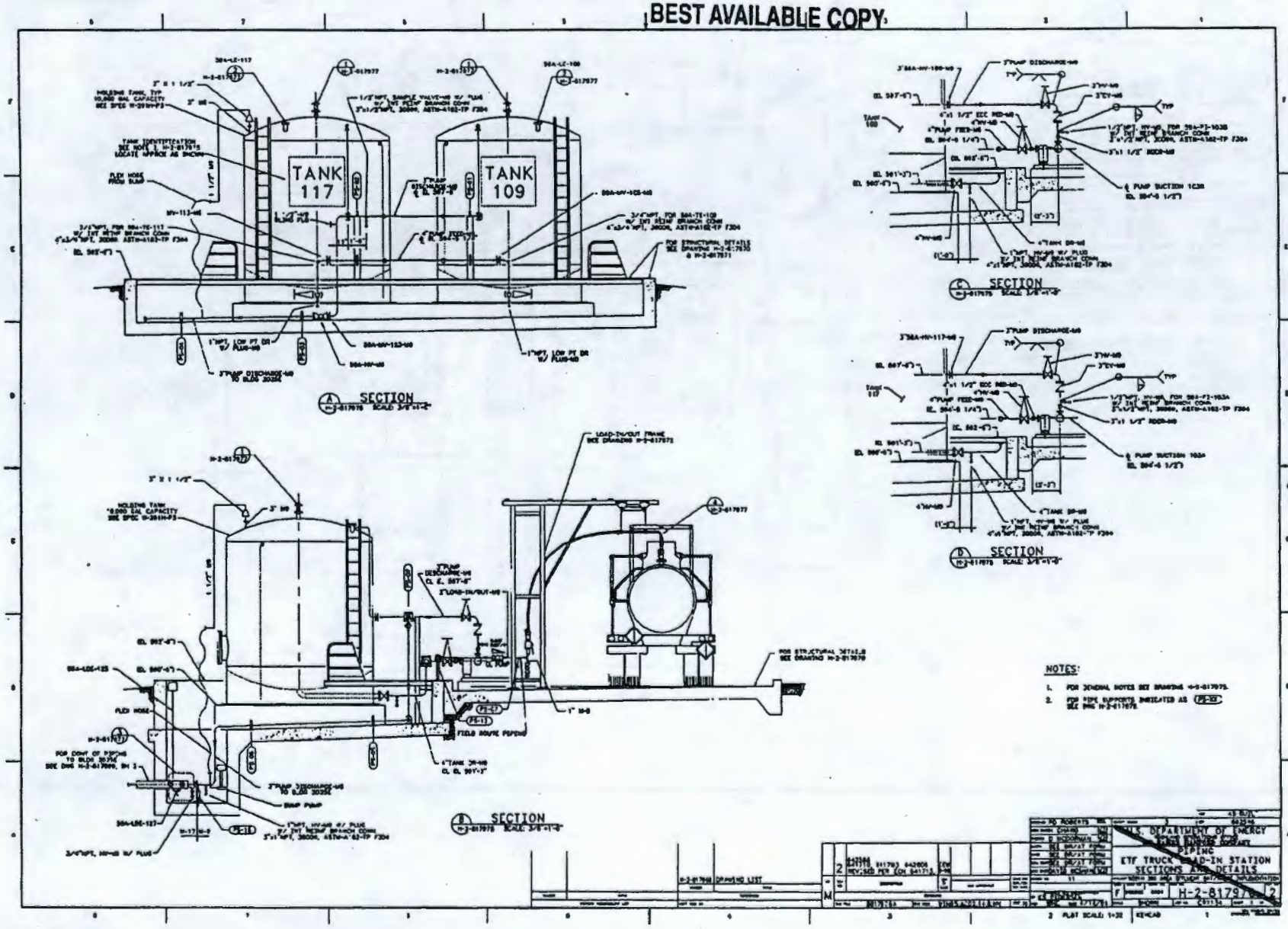

ECN 649112 Pg 12 of 18
H-2-817976, SH 1

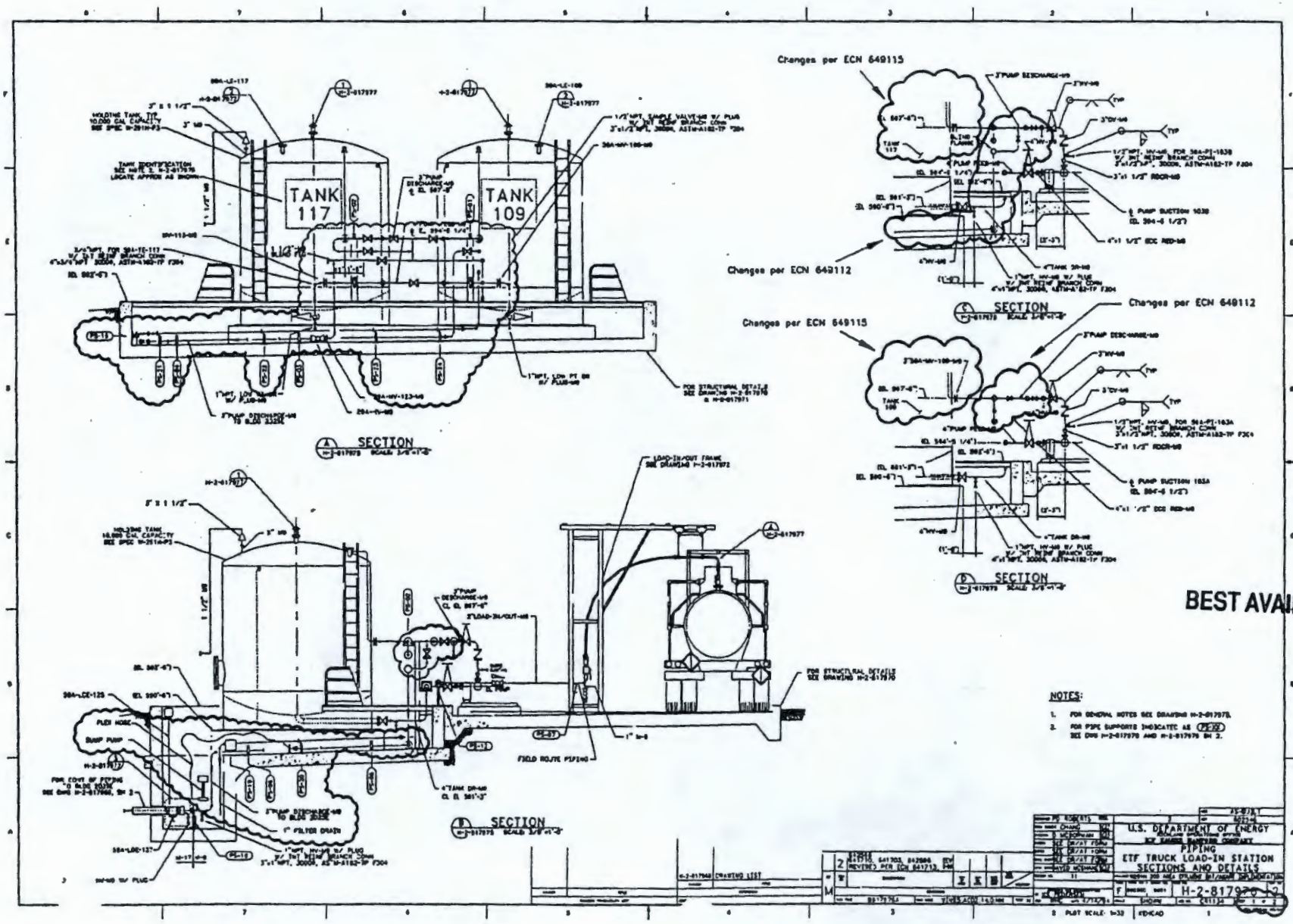

BEST AVAILABLE COPY

In
ECN 649112 Pg 13 of 15
H-2-617976, SH 1

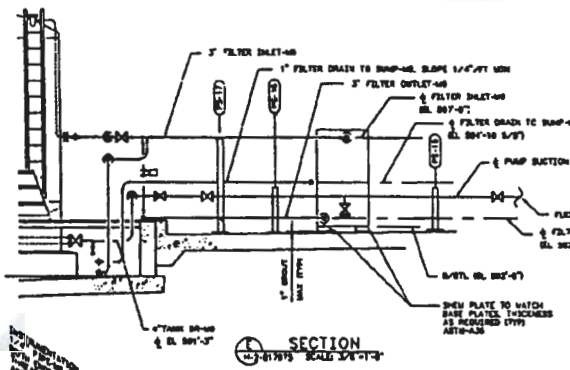

SECTION

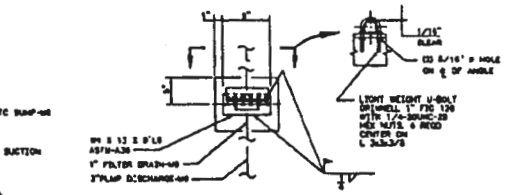

PLAN

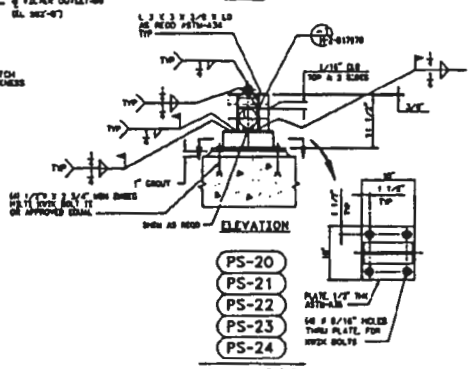

ELEVATION

PS-20
PS-21
PS-22
PS-23
PS-24

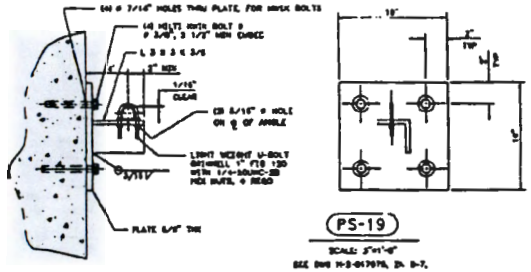

PS-19

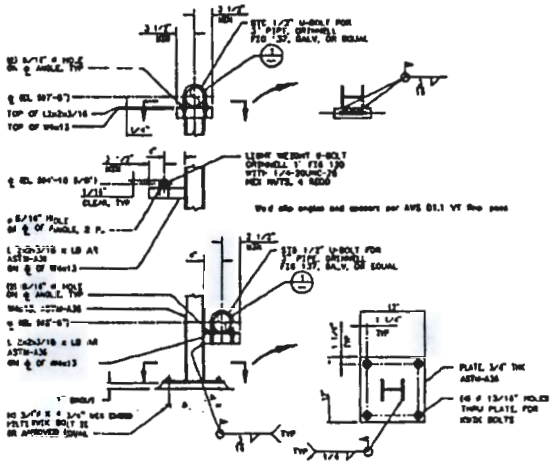

PS-17

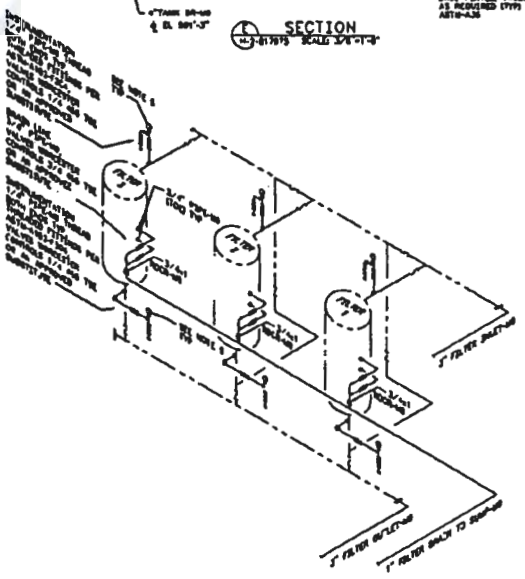

FILTER SKID ISOMETRIC

BEST AVAILABLE COPY

NOTES:

1. FOR GENERAL NOTES SEE DRAWING H-2-817975.
2. FOR PIPE SUPPORTS INDICATED AS (PS-X) SEE DWG H-2-817976 AND H-2-817976 SH 2.

ECN 649112 PG 14 of 15
H-2-817976, SH 2

PIPING
ETF TRUCK LOAD-IN STATION
SECTIONS AND DETAILS

H-2-817976 | 0

ECN 649112 pg 15 of 15

ATTACHMENT 2, AUTHORIZATION BASES REVIEW FORM

Part A:

REFERENCE ITEM # _____

Proposed Change/Discovery (circle one)

APPROVAL DESIGNATOR E

TITLE Truck Load-in Filter

DESCRIPTION Filtration will be installed by ECN 649112 at the truck load-in facility to provide the capability to accept new waste streams containing solids simultaneously while receiving existing waste generator shipments.

Originator Signature 5-3-99 Date

Part B:

Does the referenced item: (check one)

A.	Increase risk from a hazard - to the workers &/or public beyond that previously analyzed, evaluated, and documented in the Authorization Bases?	NO X Yes/Maybe_
B.	Reduce the reliability or effectiveness of features, controls, procedures, or processes used to mitigate hazards?	NO X Yes/Maybe_
C.	Introduce a hazard not evaluated in the Authorization Bases?	NO X Yes/Maybe_
D.	Reflect new information on existing hazards beyond that currently documented in the Authorization Bases?	NO X Yes/Maybe_

DETERMINATION BASES: Record complete justification and reference information below. Use Attachment 3 for continuations. Maintain with submittal package.

A "No Impact, ABR Closed" determination was made as suspended solids removal by filtration has been previously identified within the authorization basis as an acceptable operation within the 200 Area ETF. Hazards associated with filtration of wastes at the Truck Load-in Station are similar to those encountered during operations at the treatment facility. Permit modification requests have been submitted to gain regulatory approval for installation and operation of the new filtration system.

PABI, Item Remains Open	No Impact, ABR Closed		
☐	☑	Authorization Bases Evaluator	5-3-99 Date
☐	☐	Technical Support Group Manager	Date

IPF7, CPF 18

ESSENTIAL ENGINEERING CHANGE NOTICE

Page 1 of 6

1. ECN 649116

Proj. ECN

2. ECN Category (mark one)	3. Originator's Name, Organization, MSIN, and Telephone No.	4. USQ Required?	5. Date
Supplemental [] Direct Revision [] Change ECN [x] Temporary [] Standby [] Supersedure [] Cancel/Void []	AF Crane, 32910, S6-72, 372-3152	[] Yes [x] No	05/18/99
	6. Project Title/No./Work Order No. Truck Load-in Filter/CACN 106883 COA EK00	7. Bldg./Sys./Fac. No. 2025EC/59A/ETF	8. Approval Designator N/A
	9. Document Numbers Changed by this ECN (includes sheet no. and rev.) H-2-817974, Sh 1 Rev 10	10. Related ECN No(s). 649112	11. Related PO No. N/A

12a. Modification Work	12b. Work Package No.	12c. Modification Work Complete	12d. Restored to Original Condition (Temp. or Standby ECN only)
[x] Yes (fill out Blk. 12b) [] No (NA Blks. 12b, 12c, 12d)	EL-99-00071/M	DEC 07 1999 STA 34 12/6/99 Design Authority/Cog. Engineer Signature & Date	N/A Design Authority/Cog. Engineer Signature & Date

13a. Description of Change

13b. Design Baseline Document? [x] Yes [] No

This ECN changes:

H-2-817974, Sh 1, Zone D-6, pg 8 of ECN 649112 – Valve label "59A-024" is changed to "59A-067".

~~H-2-817974, Sh 2~~, Zone D-5/6, pg 9 of ECN 649112 – Piping labels '3"-59A-001-M9' and '3"-59A-004-M9' are deleted.
(JKB 5/19/99)

All other changes and requirements as described in ECN 649112 remain the same.

14a. Justification (mark one)

Criteria Change	[]	Design Improvement	[]	Environmental	[]	Facility Deactivation	[]
As-Found	[]	Facilitate Const	[]	Const. Error/Omission	[]	Design Error/Omission	[x]

14b. Justification Details

Changes are required to eliminate duplicate component numbering.

Informal design review performed by RJ Huth.

15. Distribution (include name, MSIN, and no. of copies)

MW Bowman	S6-72 (1)	JM Isdell	B4-39 (1)*	NJ Sullivan	S6-72 (1)
AF Crane	S6-72 (1)*	CD Skogley	T4-05 (1)	WCC Planning	S6-71 (1)*
RJ Huth	S6-72 (1)	DK Smith	S6-71 (1)	(* = 1 Advance Copy)	

RELEASE STAMP

MAY 19 1999

DATE: HANFORD RELEASE

STA: ID:

#30 (15)

A-7900-013-2 (05/96) GEF095

A-7900-013-1

ENGINEERING CHANGE NOTICE	Page 2 of 6	1. ECN 649116

16. Design Verification Required	17. Cost Impact ——> NA <—— ENGINEERING		CONSTRUCTION		18. Schedule Impact (days) ——> NA <——	
[X] Yes	Additional	[] $	Additional	[] $	Improvement	[]
[] No	Savings	[] $	Savings	[] $	Delay	[]

19. Change Impact Review: Indicate the related documents (other than the engineering documents identified on Side 1) that will be affected by the change described in Block 13. Enter the affected document number in Block 20.

SDD/DD	[NA]	Seismic/Stress Analysis	[NA]	Tank Calibration Manual	[NA]
Functional Design Criteria	[NA]	Stress/Design Report	[NA]	Health Physics Procedure	[NA]
Operating Specification	[NA]	Interface Control Drawing	[NA]	Spares Multiple Unit Listing	[NA]
Criticality Specification	[NA]	Calibration Procedure	[NA]	Test Procedures/Specification	[NA]
Conceptual Design Report	[NA]	Installation Procedure	[NA]	Component Index	[X]
Equipment Spec.	[NA]	Maintenance Procedure	[NA]	ASME Coded Item	[NA]
Const. Spec.	[NA]	Engineering Procedure	[NA]	Human Factor Consideration	[NA]
Procurement Spec.	[NA]	Operating Instruction	[NA]	Computer Software	[NA]
Vendor Information	[X]	Operating Procedure	[X]	Electric Circuit Schedule	[NA]
OM Manual	[NA]	Operational Safety Requirement	[NA]	ICRS Procedure	[NA]
FSAR/SAR	[NA]	IEFD Drawing	[NA]	Process Control Manual/Plan	[NA]
Safety Equipment List	[NA]	Cell Arrangement Drawing	[NA]	Process Flow Chart	[NA]
Radiation Work Permit	[NA]	Essential Material Specification	[NA]	Purchase Requisition	[NA]
Environmental Impact Statement	[NA]	Fac. Proc. Samp. Schedule	[NA]	Tickler File	[NA]
Environmental Report	[NA]	Inspection Plan	[NA]		[]
Environmental Permit	[NA]	Inventory Adjustment Request	[NA]		[]

20. Other Affected Documents: (NOTE: Documents listed below will not be revised by this ECN.) Signatures below indicate that the signing organization has been notified of other affected documents listed below.

Document Number/Revision	Document Number/Revision	Document Number Revision
POP-59A-001, Rev X-4		

21. Approvals

	Signature	Date		Signature	Date
Design Authority AF Crane	AF Crane	5-18-99	Design Agent AF Crane	AF Crane	5-18-99
Cog. Eng.			PE		
Cog. Mgr. NJ Sullivan	NJ Sullivan	5-18-99	QA		
QA			Safety		
Safety			Design		
Environ.			Environ.		
Other			Other		
Operations					
RJ Huth Informal Design Review	RJ Huth	5.18.99			
			DEPARTMENT OF ENERGY		
			Signature or a Control Number that tracks the Approval Signature		
			ADDITIONAL		

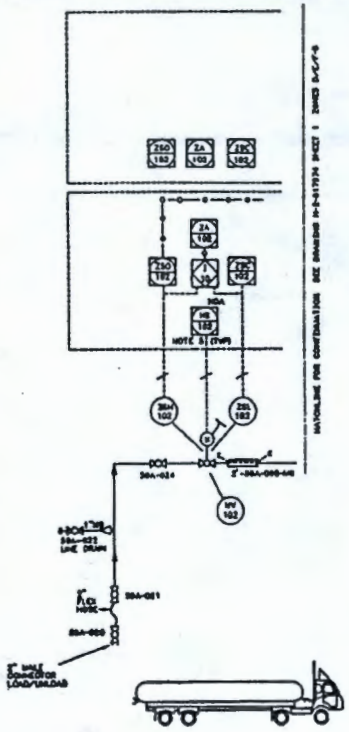

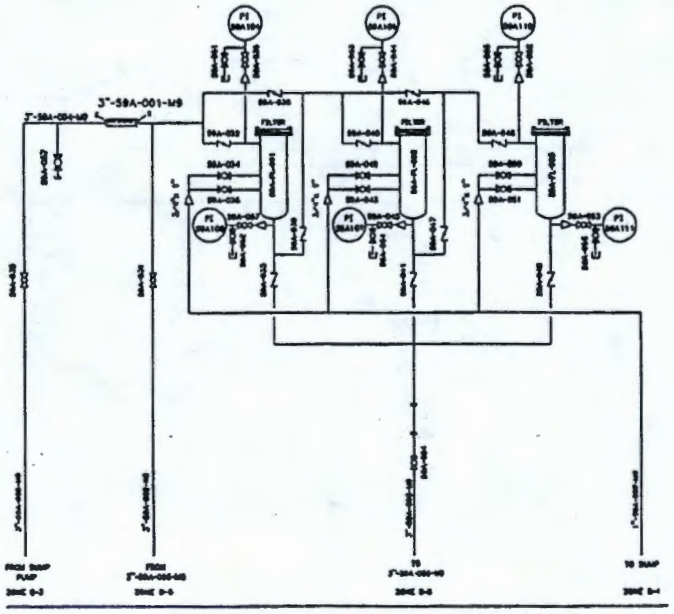

MATCHLINE FOR CONTINUATION SEE DRAWING H-2-817974 SHEET 1

ECN 649116 pg 5 of 6
H-2-817974, SH 2

ESSENTIAL DRAWING

U.S. DEPARTMENT OF ENERGY
RICHLAND OPERATIONS OFFICE
WESTINGHOUSE HANFORD COMPANY

P & I D
ETF TRUCK LOAD IN STATION

H-2-817974

SCALE 1=1

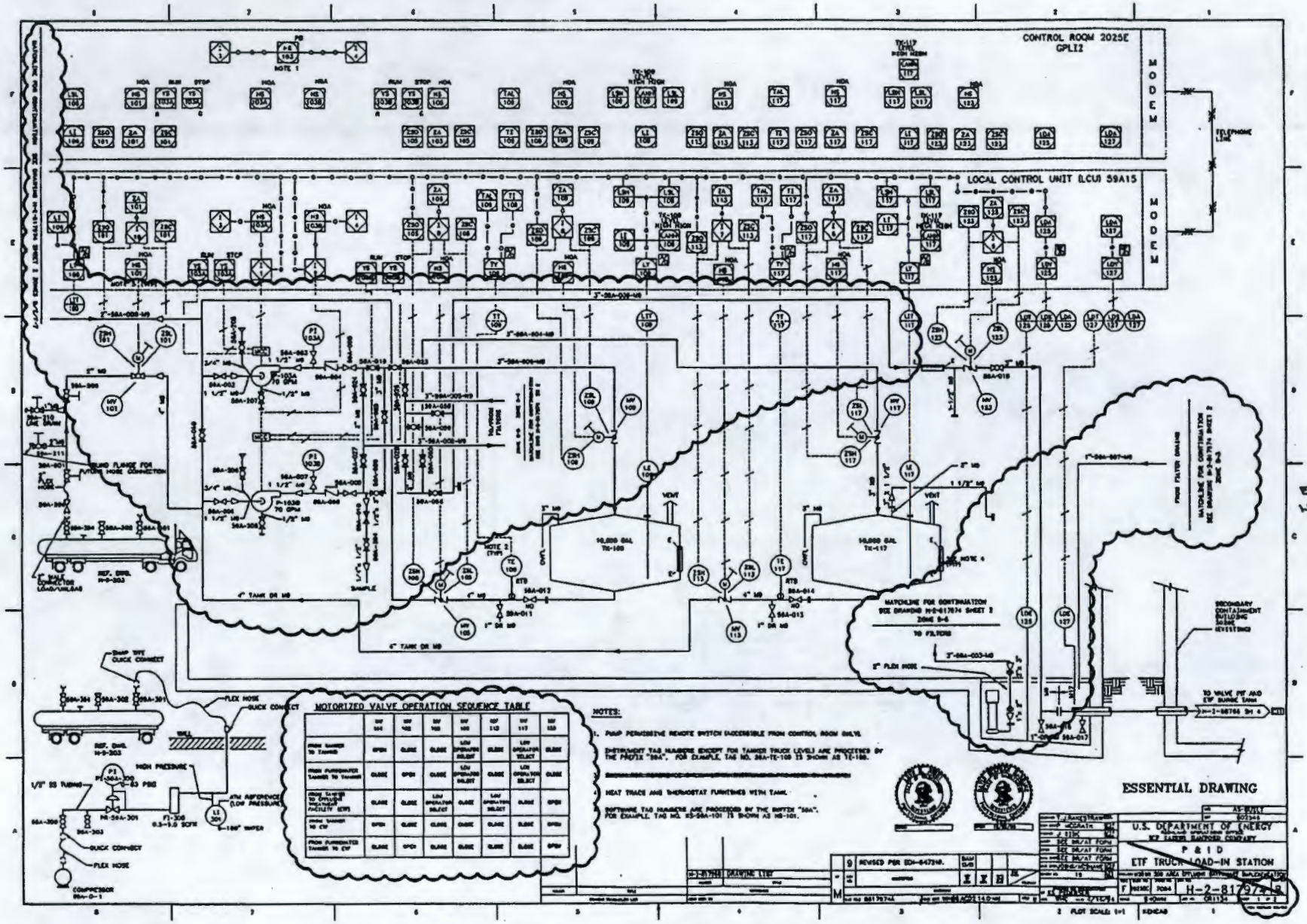

Was
ECN 649116 Pg 3 of 6
H-2-817974, SH 1

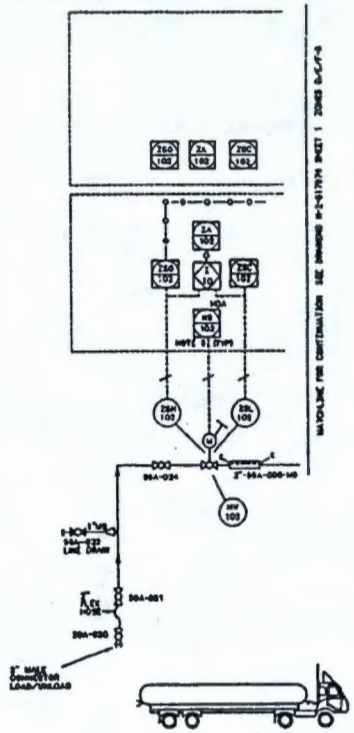

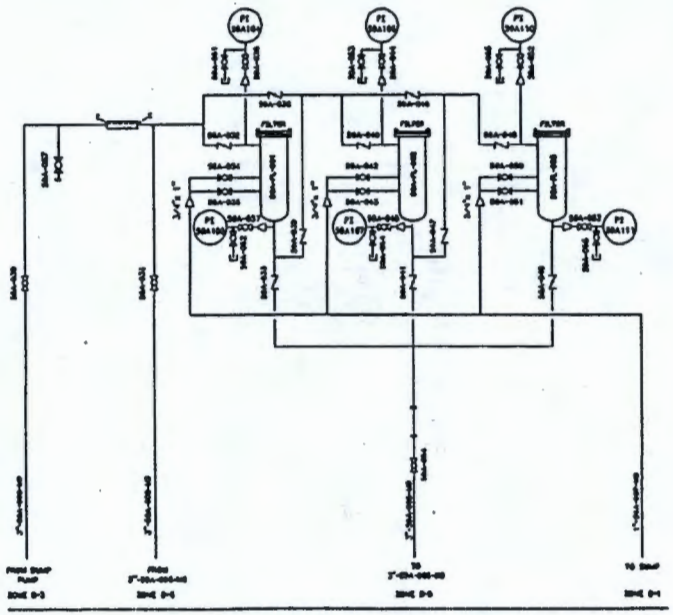

MATCHLINE FOR CONTINUATION SEE DRAWING H-2-817974 SHEET 1

ESSENTIAL DRAWING

U.S. DEPARTMENT OF ENERGY
RICHLAND OPERATIONS OFFICE
WESTINGHOUSE HANFORD COMPANY

ETF TRUCK LOAD-IN STATION

H-2-817974

ECN 649116 Pg 6 of 6
H-2-817974 SH 2

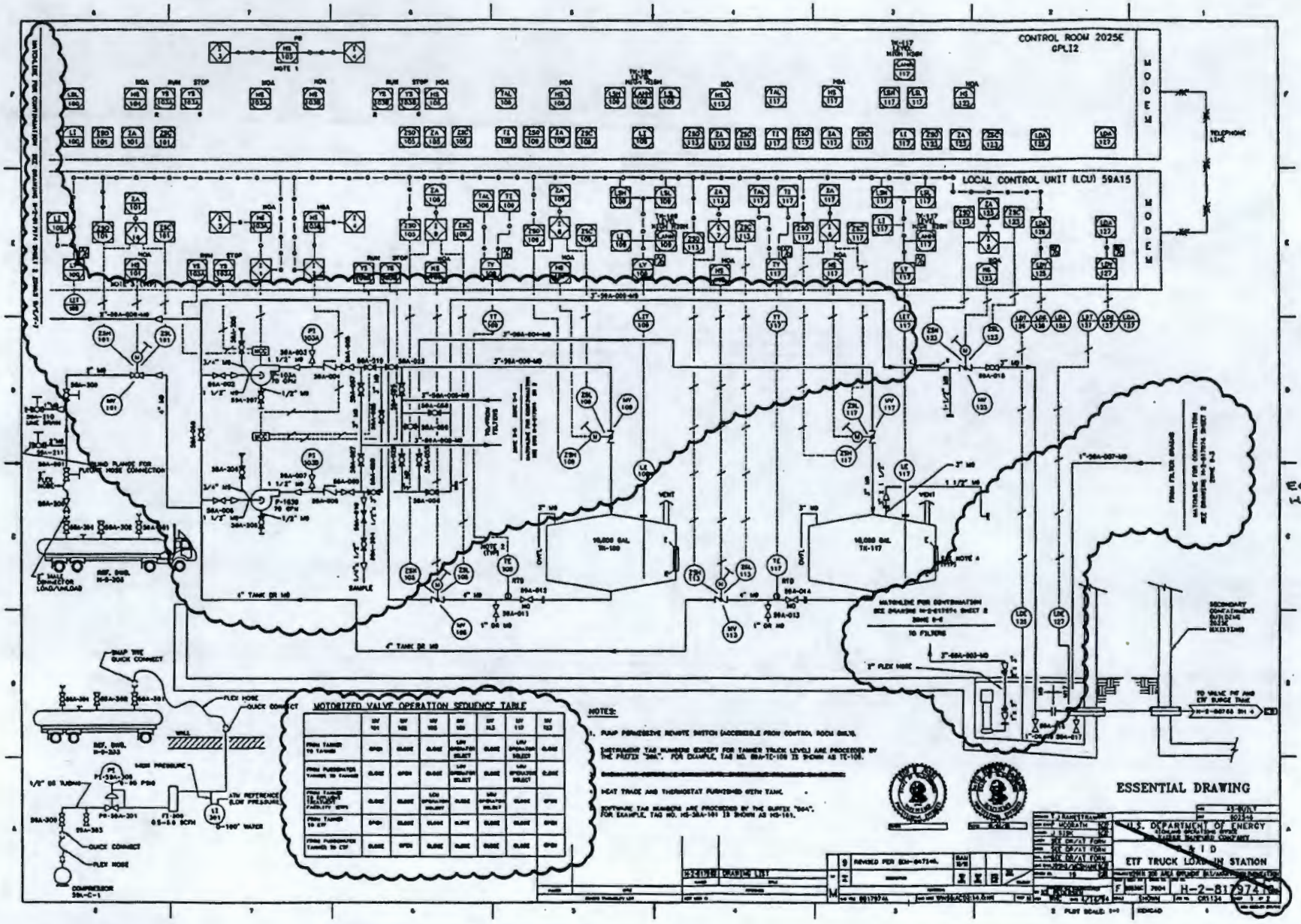

Is
ECN 649116 Pg 4 of 6
H-2-817974, SH 1

ESSENTIAL

ENGINEERING CHANGE NOTICE

CPF 18

Page 1 of 11

1. ECN 649101

Proj. ECN

2. ECN Category (mark one)	3. Originator's Name, Organization, MSIN, and Telephone No.	4. USQ Required?	5. Date
Supplemental [] Direct Revision [] Change ECN [] Temporary [] Standby [] Supersedure [x] Cancel/Void []	AF Crane, 32230, S6-72, 372-3152	[] Yes [X] No	12/08/98
	6. Project Title/No./Work Order No.	7. Bldg./Sys./Fac. No.	8. Approval Designator
	4% H_2SO_4 System Upgrade/CACN 101697/BD00	2025E/65C	N/A
	9. Document Numbers Changed by this ECN (includes sheet no. and rev.)	10. Related ECN No(s).	11. Related PO No.
	H-2-88977, Sh 1, Rev 8 H-2-88992, Sh 1, Rev 9 H-2-89337, Sh 1, Rev 10 H-2-89351, Sh 1, Rev 4	644639 645649 647893	N/A

12a. Modification Work	12b. Work Package No.	12c. Modification Work Complete	12d. Restored to Original Condition (Temp. or Standby ECN only)
[X] Yes (fill out Blk. 12b) [] No (NA Blks. 12b, 12c, 12d)	EL-97-00466/M	Design Authority/Cog. Engineer Signature & Date	N/A Design Authority/Cog. Engineer Signature & Date

13a. Description of Change

13b. Design Baseline Document? [X] Yes [] No

See attached continuation sheet. Piping is to be in accordance with pipe classes 151PP and 155, fabricated and tested per ASME B31.3 for normal fluid service.

This ECN supercedes ECN's 644639, 645649 and 647893.

14a. Justification (mark one)

Criteria Change	[X]	Design Improvement	[]	Environmental	[]	Facility Deactivation	[]
As-Found	[]	Facilitate Const	[]	Const. Error/Omission	[]	Design Error/Omission	[]

14b. Justification Details

The existing 4% H_2SO_4 system requires upgrade to rigid piping and delivery equipment to provide more reliable service and eliminate hazards associated with the use of CPVC piping. Changes are required to the initial design to satisfy operational requirements.

Informal design review performed by RJ Huth.

15. Distribution (include name, MSIN, and no. of copies)

MW Clayton	L6-05	(1)	RJ Nicklas	S6-72	(1)
AF Crane	S6-72	(1) *	DB Powell	T3-07	(1)
BS Darling	T4-61	(1)	CD Skogley	T4-05	(1)
RJ Huth	S6-72	(1)	NJ Sullivan	S6-72	(1)
JM Isdell	B4-39	(1) *	AK Yoakum	S6-71	(1)
LL Lin	S6-72	(1) *			

* Advance Copy

* WCC PLANNING S6-72

RELEASE STAMP

DEC 14 1998

DATE: HANFORD RELEASE ID:

STA: 30

A-7900-013-2 (05/96) GEF095

A-7900-013-1

ENGINEERING CHANGE NOTICE	Page 2 of 11	1. ECN (use no. from pg. 1) 649101

16. Design Verification Required	17. Cost Impact N/A				18. Schedule Impact (days) N/A	
	ENGINEERING		CONSTRUCTION			
[X] Yes	Additional	[] $	Additional	[] $	Improvement	[]
[] No	Savings	[] $	Savings	[] $	Delay	[]

19. Change Impact Review: Indicate the related documents (other than the engineering documents identified on Side 1) that will be affected by the change described in Block 13. Enter the affected document number in Block 20.

SDD/DD	[]	Seismic/Stress Analysis	[]	Tank Calibration Manual	[]
Functional Design Criteria	[]	Stress/Design Report	[]	Health Physics Procedure	[]
Operating Specification	[]	Interface Control Drawing	[]	Spares Multiple Unit Listing	[]
Criticality Specification	[]	Calibration Procedure	[]	Test Procedures/Specification	[]
Conceptual Design Report	[]	Installation Procedure	[]	Component Index	[X]
Equipment Spec.	[]	Maintenance Procedure	[]	ASME Coded Item	[]
Const. Spec.	[]	Engineering Procedure	[]	Human Factor Consideration	[]
Procurement Spec.	[]	Operating Instruction	[]	Computer Software	[]
Vendor Information	[]	Operating Procedure	[X]	Electric Circuit Schedule	[]
OM Manual	[]	Operational Safety Requirement	[]	ICRS Procedure	[]
FSAR/SAR	[]	IEFD Drawing	[]	Process Control Manual/Plan	[]
Safety Equipment List	[]	Cell Arrangement Drawing	[]	Process Flow Chart	[]
Radiation Work Permit	[]	Essential Material Specification	[]	Purchase Requisition	[]
Environmental Impact Statement	[]	Fac. Proc. Samp. Schedule	[]	Tickler File	[]
Environmental Report	[]	Inspection Plan	[]		[]
Environmental Permit	[]	Inventory Adjustment Request	[]		[]

20. Other Affected Documents: (NOTE: Documents listed below will not be revised by this ECN.) Signatures below indicate that the signing organization has been notified of other affected documents listed below.

Document Number/Revision	Document Number/Revision	Document Number Revision
POP-65C-001, Rev H-2		
HNF-SD-ETF-OCD-001, Rev 5		

21. Approvals

	Signature	Date		Signature	Date
Design Authority	LL Lin	12-10-98	Design Agent	AF Crane	12-8-98
Cog. Eng.			PE		
Cog. Mgr.	NJ Sullivan	12-10-98	QA		
QA			Safety		
Safety			Design		
Environ.			Environ.		
Other RJ Huth Informal Design Review		12.9.98	Other		

DEPARTMENT OF ENERGY

Signature or a Control Number that tracks the Approval Signature

ADDITIONAL

H-2-88977, Sh 1, Zone F-3:	Change call-out over reference to drawing H-2-88992 to "4% H2SO4".
H-2-88977, Sh 1, Zone F-4:	Add pressure regulator PCV-65C-079.
H-2-88992, Sh 1, Zone D-3:	Change line call-out from 1"-65C-065-155 to 1"-65C-065-151PP.
	Add material change call-out at flanged connection & reducer downstream of connection to 1"-65C-065-151PP.
H-2-88992, Sh 1, Zone D-4:	Change 65C-014, 65C-016, 65C-017 & 65C-056 to ball valves.
	Add reducer upstream of 65C-016.
	Add reducer, material change & 3/4" call-out downstream of 65C-016.
	Add reducer & 1-1/2" -151PP callout downstream of pump 65C-P-3 discharge.
	Add reducer upstream of 65C-056.
	Add reducer & 3/4" call-out downstream of instrument drainline valve adjacent to 65C-056.
	Remove one flanged connection from suction side of 65C-P-3.
	Remove closed ball valve between 65C-056 & PIT 65C-112.
H-2-88992, Sh 1, Zone D-5:	Add ball valves 65C-101 & 65C-102.
	Change 65C-049 & 65C-012 to ball valves.
	Change line reference from 1-1/2"-65C-007-155 to 1-1/2"-65C-007-151PP.
	Remove line reference 3/4"-65C-028-155 & PI-65C113.
	Remove pressure boundary call-out above 65C-012.
	Change valve 65C-115 to a ball valve. Show pipe class 3" -155PP adjacent to valve 65C-115.
H-2-88992, Sh 1, Zone E-3:	Change 65C-401 to a ball valve.
H-2-88992, Sh 1, Zone E-4:	Add FT-65C110.
	Change 65C-015 to a plug valve.
	Change line call-out from 3/4"-65C-009-155 to 1"-65C-009-151PP.

H-2-88992, Sh 1, Zone E-4:	Remove flow orifice FO-65C-002.
H-2-88992, Sh 1, Zone E-5:	Add 3/4" call-out inside 65C-TK-3 adjacent to recirculation line.
H-2-88992, Sh 1, Zone F-3:	Move material change call-out & change 1/2" call-out to 3/4" call-out adjacent to 65C-403. Add reducer downstream of 65C-403.
H-2-89337, Sh 1, Zone F-6:	Add pressure regulator PCV-65C-105.
H-2-89351, Sh 1, Zone A-2:	Add self contained pressure regulator symbol.
H-2-89351, Sh 1, Zone A-3:	Add external tap callout to pressure regulator symbol.

BEST AVAILABLE COPY

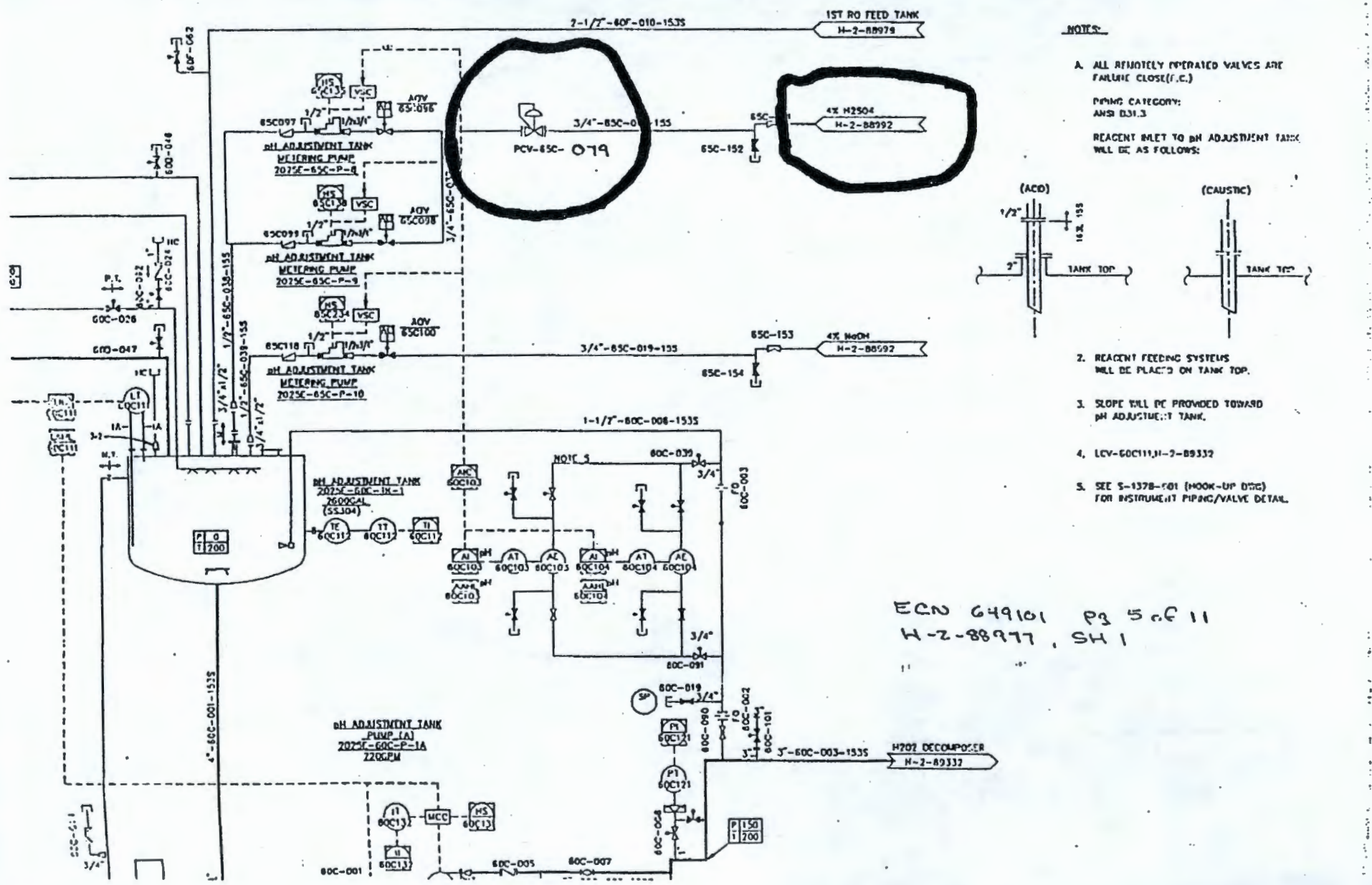

ECN 649101 P3 5 of 11
H-2-88977, SH 1

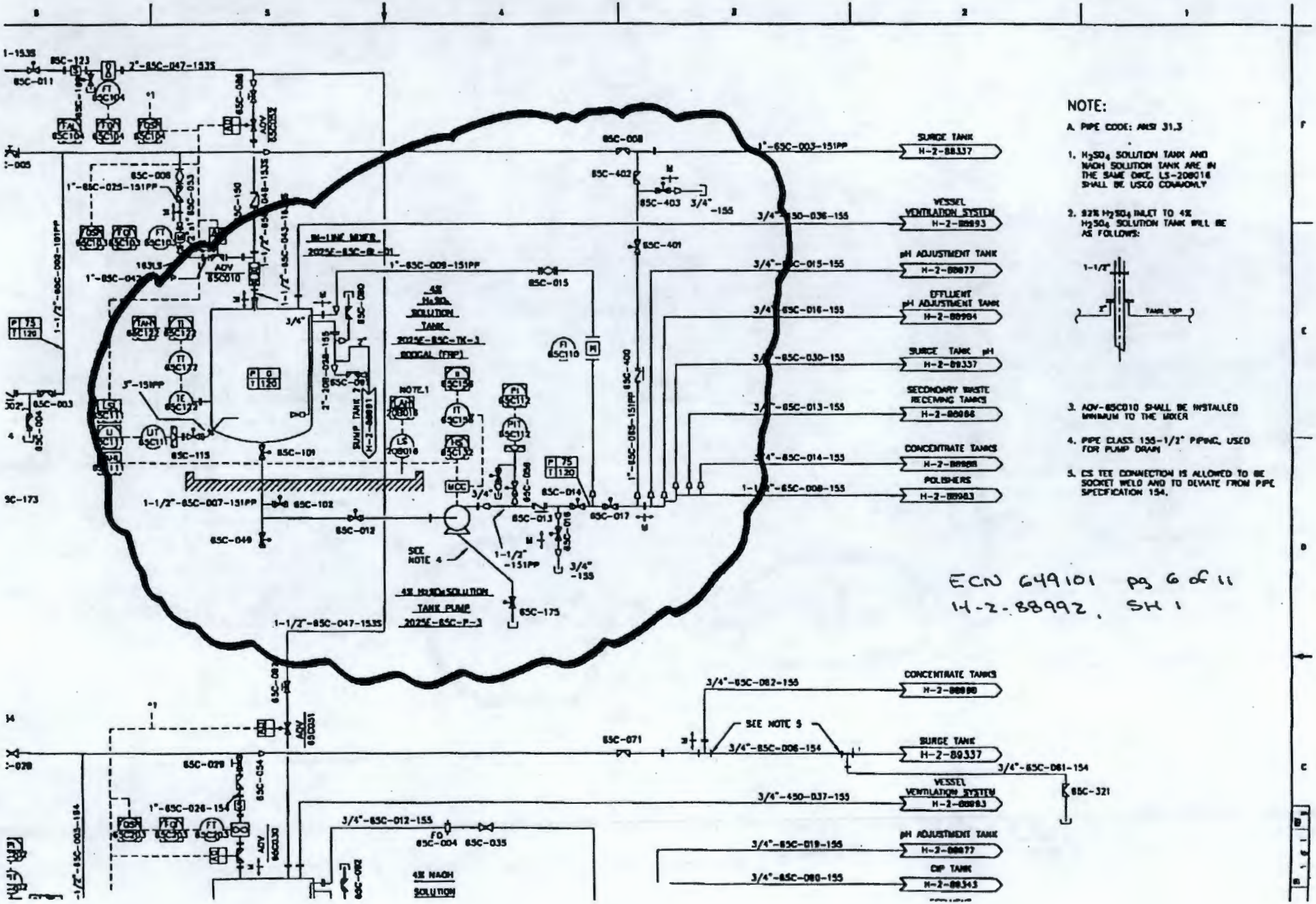

ECN 649101 pg 6 of 11
H-2-88992, SH 1

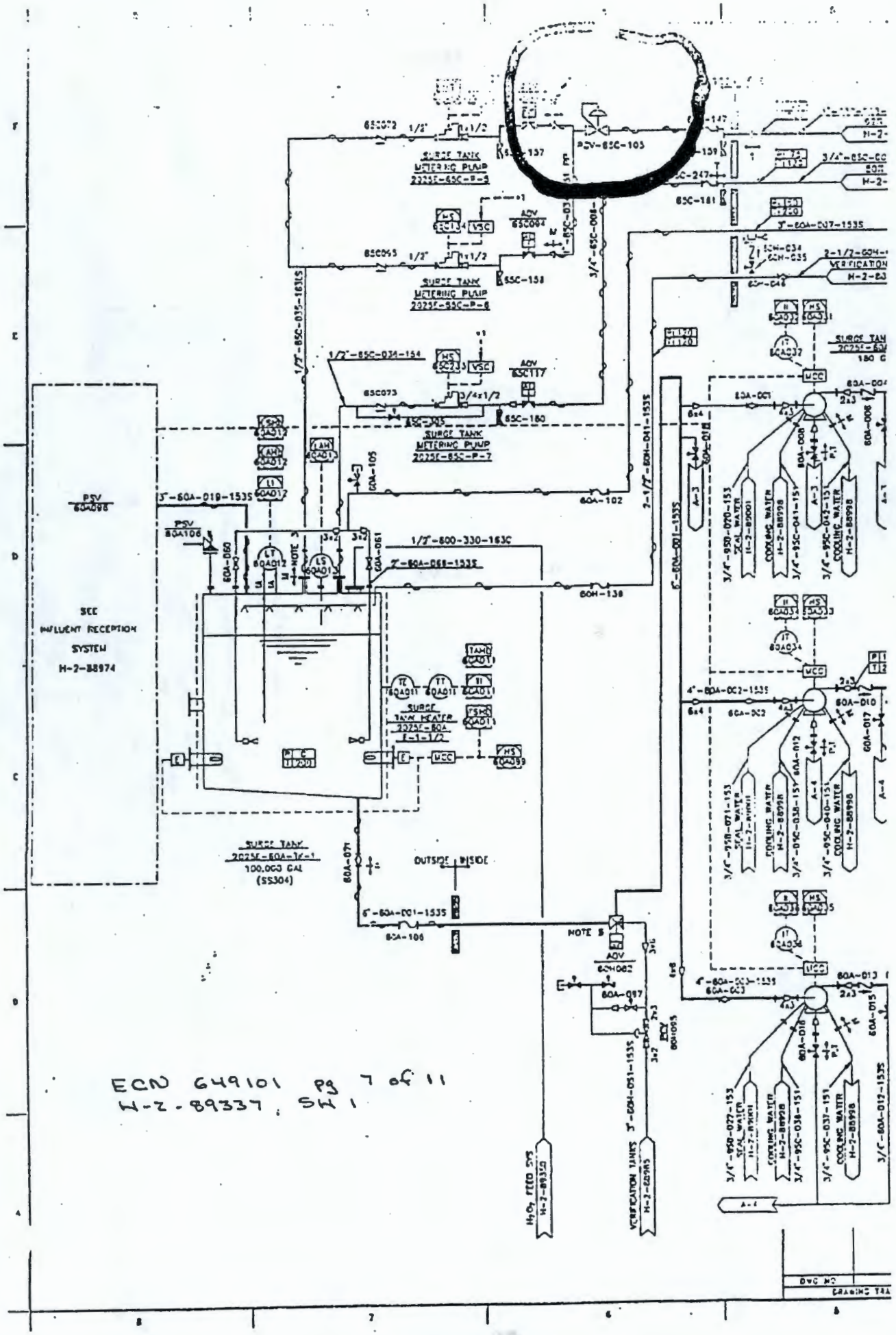

ECN 649101 pg 7 of 11
H-2-89337, SW 1

VD01	VD11	VD1	VD1	VC					VD2
		V1	V1	VC					V2
201	211	21	21	2C					2V
2D01	2D11	2D1	2D1	2DC					2DV

SYSTEM NUMBER

	NO.	DESCRIPTION
S	60 G	ION EXCHANGE SYSTEM
TEM	60 H	EFFLUENT VERIFICATION SYSTEM
TEM	60 I	WASTE EVAPORATION SYSTEM
	60 J	WASTE DRYING SYSTEM
DRAIN SYSTEMS	60 K	WASTE PACKAGING/DRUM HANDLING
YSTEM	65	PROCESS SUPPORT SYSTEMS
TEM	65 A	BOILER & STEAM GENERATION
	65 C	CHEMICAL MAKEUP & STORAGE
TEM	80	RECEIVING, HANDLING, AND SHIPPING SYSTEMS
	80 C	DRUM HANDLING SYSTEM
	80 E	RESIN DEWATERING SYSTEM
AND STAGING SYSTEM	95	WATER SYSTEMS
	95 B	CLOSED LOOP COOLING
CM	95 C	COOLING WATER SYSTEM
N	95 D	DEMINERALIZED WATER SYSTEM
TEM		
STEM		

PIPE CLASS INDEX

CRIPTION	CLASS NO.	ANSI CODE	DESCRIPTION
LB CARBON STEEL PING (NON-DIOACTIVE/NON-HAZARDOUS RVICE)	156	B31.3	150 LB TYPE 304L STAINLESS STEEL PIPING (RADIOACTIVE/HAZARDOUS SERVICE)
LB POLYVINYLIDENE URIDE (PVDF) ED CARBON STEEL PING (RADIOACTIVE/ ARDOUS SERVICE)	163C	B31.3	TYPE 316L STAINLESS STEEL TUBING (RADIOACTIVE/ HAZARDOUS SERVICE)
LB TYPE 304 STAINLESS EL PIPING (NON-DIOACTIVE/NON-HAZARDOUS RVICE)	163LS	B31.3	150 LB TYPE 316L STAINLESS STEEL PIPING (RADIOACTIVE/HAZARDOUS SERVICE)
LB TYPE 304 STAINLESS EL PIPING ADIOACTIVE/HAZARDOUS RVICE)	166H	B31.3	150 LB INCONEL ALLOY 625 PIPING (RADIOACTIVE/HAZARDOUS SERVICE)
E 316 STAINLESS EL PIPING	168H	B31.3	150 LB HASTELLOY C-276 NICKEL ALLOY(RADIOACTIVE/ HAZARDOUS SERVICE)
LB CARBON STEEL PING ADIOACTIVE/HAZARDOUS RVICE)	301	B31.1	300 LB CARBON STEEL PIPING (NON-RADIOACTIVE/NON-HAZARDOUS SERVICE)
LB CHLORINATED LYVINYL CHLORIDE PIPING ADIOACTIVE/HAZARDOUS RVICE)	302	B31.3	300 LB TYPE 304 STAINLESS STEEL PIPING (RADIOACTIVE/HAZARDOUS SERVICE)
	600	B31.3	600 LB TYPE 304 STAINLESS STEEL PIPING (RADIOACTIVE/HAZARDOUS SERVICE)

T MARK NUMBER FORMAT FOR INSTRUMENTS

DEFINITION: P1 60F 204 GW

) FROM UPPER TABLE)

(ABOVE SYSTEM NUMBER)

IT INDICATES UNIT; LAST TWO DIGITS START AT 00.)

N IDENTIFYING COMPONENTS THAT PERFORM
MORE INDEPENDENT PROCESS LOOPS OR TRAINS.)

PIPING CATEGORY ANSI B31.1

AIR BUBBLER TYPE LEVEL INSTRUMENT

6. VALVE SYMBOLS

PLUG, OPEN

BALL, OPEN

BALL, TOP ENTRY, OPEN

CHECK

DIAPHRAGM, OPEN

NEEDLE, OPEN

GLOBE, OPEN

BUTTERFLY, OPEN

THREE WAY

HAND CONTROL VALVE (GLOBE)

FOUR WAY

SAFETY RELIEF

VACUUM RELIEF

RUPTURE DISC

STRAINER

FLEXIBLE CONNECTION

REDUCER OR EXPANDER

RESTRICTION ORIFICE

HOSE CONNECTION

AIR OPERATED VALVE

SOLENOID VALVE

CONTROL VALVE (BALL)

PRESSURE REGULATOR, EXTERNAL TAP

NORMAL OPEN

NORMAL CLOSE

FITTING

WELD

FLANGE

TANK, WITH SPHERICAL BOTTOM

VESSEL OR TANK, HORIZONTAL OR VERTICAL

EXCHANGER, STRAIGHT TUBE

BLOWER

VERTICAL SUMP TYPE

FLOW SIGHT GLASS

SPRAY NOZZLE

EDUCTOR

VORTEX BREAKER

WORK SCOPE BOUNDARY

SLOPE

BREAK POINT

PRESSURE/TEMPERATURE DESIGN CONDITION

MANWAY

HEATER ELEMENT

TRAP

VENT TO ATMOSPHERE

MOTOR CONTROL CENTER

PRESSURE REGULATOR, SELF CONTAINED

TURBINE & OVAL TYPE

ORIFICE TYPE

ROTOR TYPE

* ALL AO VALVES HAVE OPEN CLOSE
TO DCS AND HAVE SOLENOID
HAVE TS ON DCS

ESSENTIAL DRAWING

U.S. DEPARTMENT OF ENERGY
DOE FIELD OFFICE, HOLIFIELD
JCE CORPORATION

PIPING & INSTRUMENTATION DIAGRAM — LEGEND

4		REVISED PER ECN 542184	BAN

REVISIONS

F 3075C 7004 H-2-80361

CADFILE 80883518 CADCODE

MARKER	NOUN	MARKER	NOUN
DRAWING TRACEABILITY LIST		NEXT USED ON	REFERENCES

5 4 3 2 1

Pump Suction Piping Layout

For Information Only

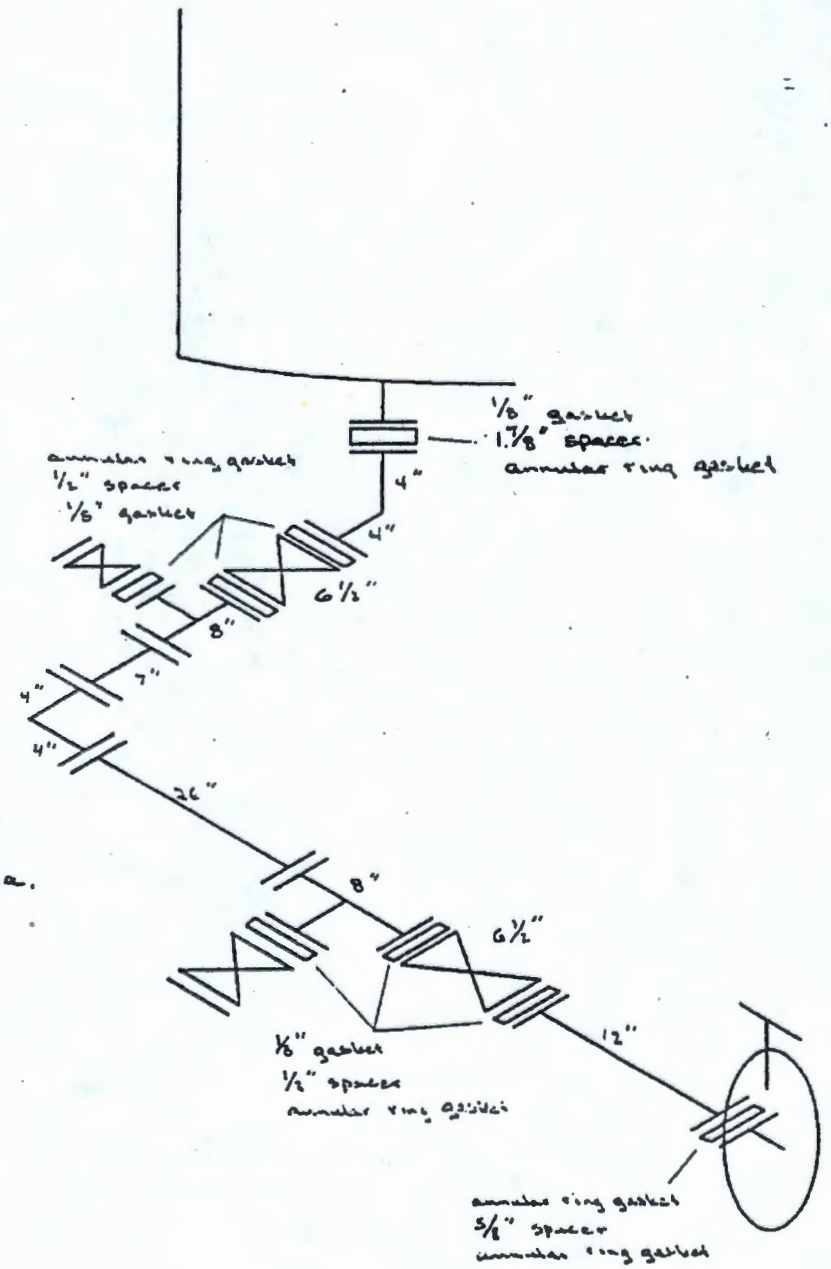

All fittings 1-1/2" dia.

1" recirculation 11-12-98

1½" [illegible]

For Information Only

ECN 649101 pg 10 of 11

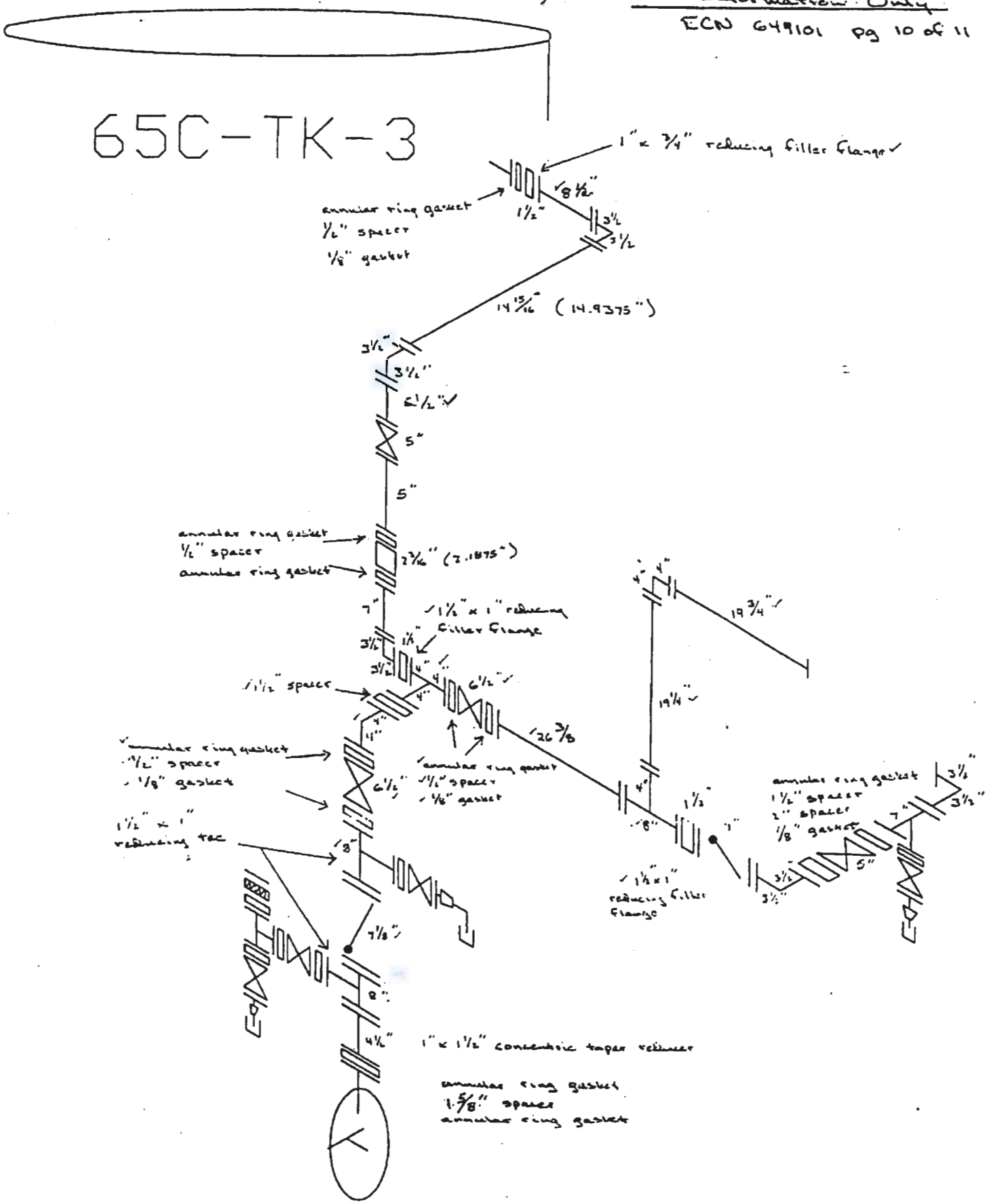

4% H_2SO_4 System Piping

Existing Pump Measurements

5-28-98

For Information Only

ECN 649101 pg 11 of 11

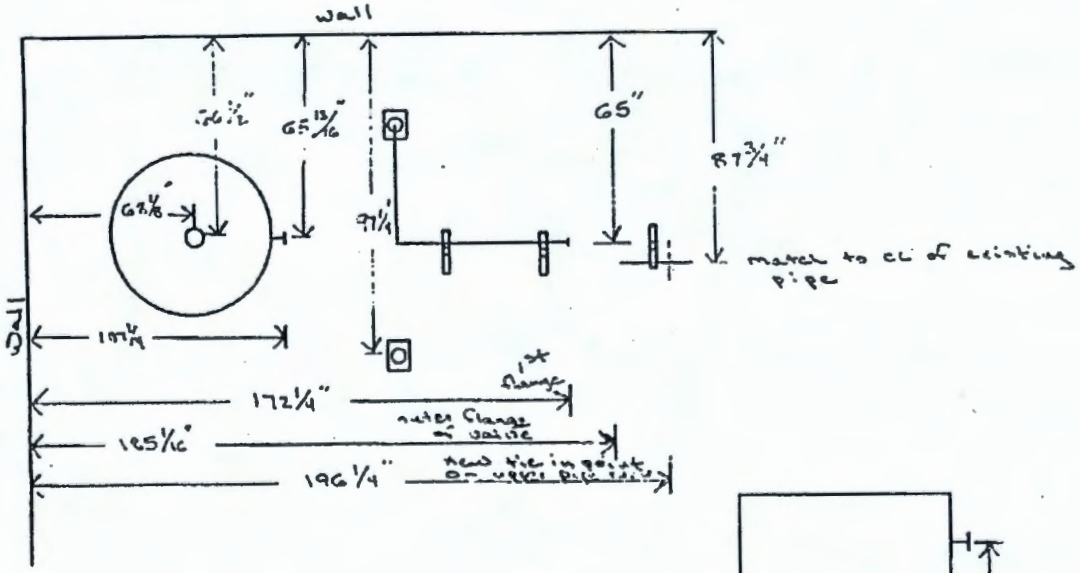

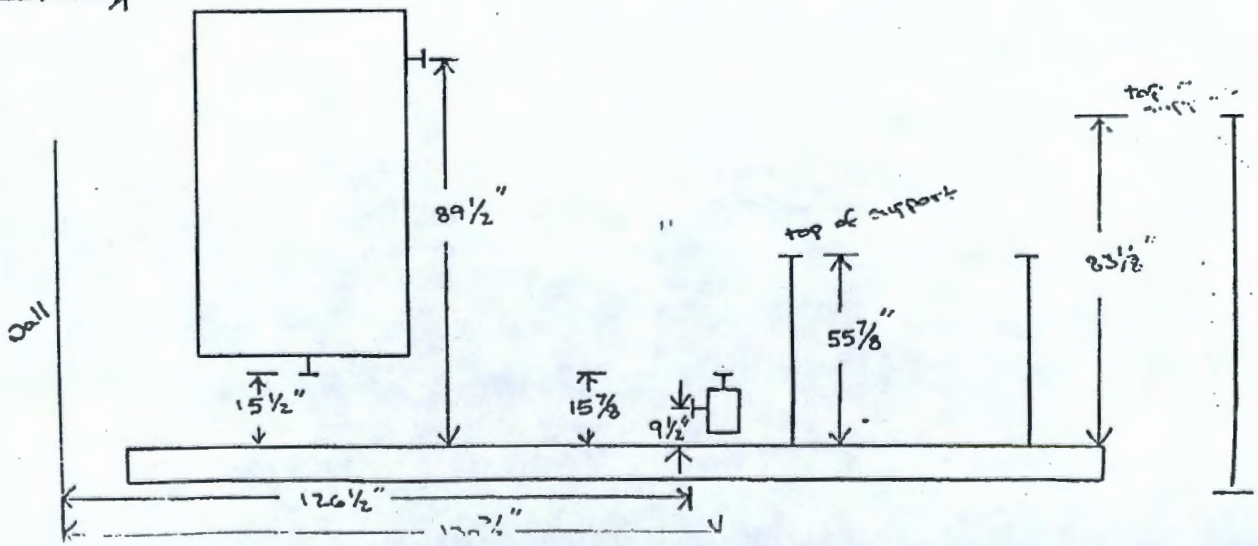

S S

CPF 18

ENGINEERING CHANGE NOTICE **ESSENTIAL**

Page 1 of 2

1. ECN 646667L

Proj. ECN

2. ECN Category (mark one)	3. Originator's Name, Organization, MSIN, and Telephone No.	4. USQ Required?	5. Date
Supplemental [] Direct Revision [] Change ECN [x] Temporary [x] Standby [] Supersedure [] Cancel/Void []	LL Lin, 32230, S6-72, 372-2759	[] Yes [X] No	5/22/98
	6. Project Title/No./Work Order No. Provide Connection Pipe for Auxiliary Fine Filter - Change/A4055	7. Bldg./Sys./Fac. No. 2025E/60B	8. Approval Designator NA
	9. Document Numbers Changed by this ECN (includes sheet no. and rev.) H-2-88975, Sh 1, Rev 8 H-2-88976, Sh 1, Rev 6	10. Related ECN No(s). 642730L	11. Related PO No. None

12a. Modification Work	12b. Work Package No.	12c. Modification Work Complete	12d. Restored to Original Condition (Temp. or Standby ECN only)
[X] Yes (fill out Blk. 12b) [] No (NA Blks. 12b, 12c, 12d)	EL-97-00451L/M	NOV 03 1998 11/3/98. Design Authority/Cog. Engineer Signature & Date	Design Authority/Cog. Engineer Signature & Date

13a. Description of Change

13b. Design Baseline Document? [X] Yes [] No

Description of Changes:

Affected document:
H-2-88975, Sh 1, Rev 8, P&ID Rough Filter System
H-2-88976, Sh 1, Rev 6, P&ID UV Oxidizer-1

Change referenced drawing H-2-88976 (Sh1, Rev 6) in Block 9 and Block 13 of ECN 642730L to H-2-88975 (Sh 1, Rev 8)

14a. Justification (mark one)

Criteria Change	[]	Design Improvement	[X]	Environmental	[]	Facility Deactivation	[]
As-Found	[X]	Facilitate Const	[]	Const. Error/Omission	[]	Design Error/Omission	[]

14b. Justification Details

To correct typo on referenced drawing number.

15. Distribution (include name, MSIN, and no. of copies)

L. L. Lin, S6-72, 1*
N. J. Sullivan, S6-72, 1
D. P. Nelsen, S6-71, 1
D. L. Tubbs, S6-74, 1
M. W. Bowman, S6-72, 1
WCC, S6-71, 1*

J. E. Geary, S6-71, 1
D. L. Flyckt, S6-72, 1
C. D. Skogley, S6-72, 1
~~J. TS Dell 63-19~~

*Advanced copies

RELEASE STAMP
MAY 26 1998
DATE:
HANFORD RELEASE
STA: 30
IDI

A-7900-013-1

ENGINEERING CHANGE NOTICE	Page 2 of 2	1. ECN (use no. from pg. 1) 646667L

16. Design Verification Required	17. Cost Impact				18. Schedule Impact (days)	
	ENGINEERING		CONSTRUCTION			
[] Yes	Additional	[na] $	Additional	[na] $	Improvement	[na]
[X] No	Savings	[na] $	Savings	[na] $	Delay	[na]

19. Change Impact Review: Indicate the related documents (other than the engineering documents identified on Side 1) that will be affected by the change described in Block 13. Enter the affected document number in Block 20.

SDD/DD	[na]	Seismic/Stress Analysis	[na]	Tank Calibration Manual	[na]
Functional Design Criteria	[na]	Stress/Design Report	[na]	Health Physics Procedure	[na]
Operating Specification	[na]	Interface Control Drawing	[na]	Spares Multiple Unit Listing	[na]
Criticality Specification	[na]	Calibration Procedure	[na]	Test Procedures/Specification	[na]
Conceptual Design Report	[na]	Installation Procedure	[na]	Component Index	[na]
Equipment Spec.	[na]	Maintenance Procedure	[na]	ASME Coded Item	[na]
Const. Spec.	[na]	Engineering Procedure	[na]	Human Factor Consideration	[na]
Procurement Spec.	[na]	Operating Instruction	[na]	Computer Software	[na]
Vendor Information	[na]	Operating Procedure	[na]	Electric Circuit Schedule	[na]
OM Manual	[na]	Operational Safety Requirement	[na]	ICRS Procedure	[na]
FSAR/SAR	[na]	IEFD Drawing	[na]	Process Control Manual/Plan	[na]
Safety Equipment List	[na]	Cell Arrangement Drawing	[na]	Process Flow Chart	[na]
Radiation Work Permit	[na]	Essential Material Specification	[na]	Purchase Requisition	[na]
Environmental Impact Statement	[na]	Fac. Proc. Samp. Schedule	[na]	Tickler File	[na]
Environmental Report	[na]	Inspection Plan	[na]		[]
Environmental Permit	[na]	Inventory Adjustment Request	[na]		[]

20. Other Affected Documents: (NOTE: Documents listed below will not be revised by this ECN.) Signatures below indicate that the signing organization has been notified of other affected documents listed below.

Document Number/Revision	Document Number/Revision	Document Number Revision

21. Approvals

	Signature	Date		Signature	Date
Design Authority	L. L. Lin	5/22/98	Design Agent	L. L. Lin	5/22/98
Cog. Eng.	L. L. Lin	5/22/98	PE		
Cog. Mgr.	R. J. Nicklas	5/22/98	QA		
QA			Safety		
Safety			Design		
Environ.			Environ.		
Other			Other		

DEPARTMENT OF ENERGY

Signature or a Control Number that tracks the Approval Signature

ADDITIONAL

CPF 18

ENGINEERING CHANGE NOTICE ESSENTIAL

1. ECN 647245

Proj. ECN

2. ECN Category (mark one)	3. Originator's Name, Organization, MSIN, and Telephone No.	4. USQ Required?	5. Date
Supplemental [x] Direct Revision [] Change ECN [] Temporary [] Standby [] Supersedure [] Cancel/Void []	RN Wagner/32200/S6-72/376-4460	[] Yes [x] No	June 22, 1998
	6. Project Title/No./Work Order No. A4055 Install Pressure Bleed Valves in Peroxide Feed Lines/Correct Hand Switch Number	7. Bldg./Sys./Fac. No. 2025E/60D/ 200 Area ETF	8. Approval Designator NA
	9. Document Numbers Changed by this ECN (includes sheet no. and rev.) See Block 13	10. Related ECN No(s). NA	11. Related PO No. NA

12a. Modification Work	12b. Work Package No.	12c. Modification Work Complete	12d. Restored to Original Condition (Temp. or Standby ECN only)
[x] Yes (fill out Blk. 12b) [] No (NA Blks. 12b, 12c, 12d)	EL-98-00463	Design Authority/Cog. Engineer Signature & Date	NA Design Authority/Cog. Engineer Signature & Date

13a. Description of Change — 13b. Design Baseline Document? [x] Yes [] No

This ECN adds needle valves to the UV/OX hydrogen peroxide injection system for the purpose of bleeding system pressure in a controlled manner prior to maintenance, and corrects the number of a hand switch for one of the peroxide injection feed pumps as shown on the drawing. The new pressure bleed valves will be Whitey part number SS-1VS4 316 or engineering approved equivalent, consistent with the system pipe code and temperature/pressure rating.

Drawings affected are:

- H-2-88976, Sheet 1, Rev. 6
- H-2-89342, Sheet 1, Rev. 6
- H-2-89350, Sheet 1, Rev. 8

Piping, fittings, and jointing methods shall meet the requirements of ETF Piping Specification Class 153T, "Type 316 Stainless Steel Tubing." Install, inspect, and test the new piping installation in accordance with ASME B31.3 and Addenda for Category D fluid service.

(Block 13a continued on Page 3)

14a. Justification (mark one)

Criteria Change	[]	Design Improvement	[x]	Environmental	[]	Facility Deactivation	[]
As-Found	[x]	Facilitate Const	[]	Const. Error/Omission	[]	Design Error/Omission	[]

14b. Justification Details

Provides a safe and controlled means of bleeding system pressure prior to maintenance, and corrects a drawing error (hand switch number).

15. Distribution (include name, MSIN, and no. of copies)

N. J. Sullivan	S6-72	1	R. J. Nicklas	T3-07	1
J. E. Geary	S6-71	1	A. K. Yoakum	S6-71	1
R. N. Wagner*	S6-72	2	M. W. Bowman	S6-72	1
E. A. McNamar	S6-72	1	C. D. Skogley	T4-05	1
D. L. Tubbs	S6-74	1	WCC Planning	S6-71*	1
D. P. Nelsen	S6-71	1	T. W. Dallas	S6-74	1
J. M. Petty	S6-74	1	D. L. Flyckt	S6-71	1
J. M. Isdell	G3-17	1*	L. L. Lin	S6-72	1

(* = 1 Advance Copy)

RELEASE STAMP
JUN 29 1998
DATE: HANFORD RELEASE ID:
STA: 30
25

ENGINEERING CHANGE NOTICE	Page 2 of 8	1. ECN (use no. from pg. 1) 647245

16. Design Verification Required	17. Cost Impact ——> NA <—— ENGINEERING		CONSTRUCTION		18. Schedule Impact (days) ——> NA <——	
[X] Yes	Additional	[] $	Additional	[] $	Improvement	[]
[] No	Savings	[] $	Savings	[] $	Delay	[]

19. Change Impact Review: Indicate the related documents (other than the engineering documents identified on Side 1) that will be affected by the change described in Block 13. Enter the affected document number in Block 20

SDD/DD	[NA]	Seismic/Stress Analysis	[NA]	Tank Calibration Manual	[NA]
Functional Design Criteria	[NA]	Stress/Design Report	[NA]	Health Physics Procedure	[NA]
Operating Specification	[NA]	Interface Control Drawing	[NA]	Spares Multiple Unit Listing	[NA]
Criticality Specification	[NA]	Calibration Procedure	[NA]	Test Procedures/Specification	[NA]
Conceptual Design Report	[NA]	Installation Procedure	[NA]	Component Index	[x]
Equipment Spec.	[NA]	Maintenance Procedure	[NA]	ASME Coded Item	[NA]
Const. Spec.	[NA]	Engineering Procedure	[NA]	Human Factor Consideration	[NA]
Procurement Spec.	[NA]	Operating Instruction	[NA]	Computer Software	[NA]
Vendor Information	[NA]	Operating Procedure	[x]	Electric Circuit Schedule	[NA]
OM Manual	[NA]	Operational Safety Requirement	[NA]	ICRS Procedure	[NA]
FSAR/SAR	[NA]	IEFD Drawing	[NA]	Process Control Manual/Plan	[NA]
Safety Equipment List	[NA]	Cell Arrangement Drawing	[NA]	Process Flow Chart	[NA]
Radiation Work Permit	[NA]	Essential Material Specification	[NA]	Purchase Requisition	[NA]
Environmental Impact Statement	[NA]	Fac. Proc. Samp. Schedule	[NA]	Tickler File	[NA]
Environmental Report	[NA]	Inspection Plan	[NA]		[]
Environmental Permit	[NA]	Inventory Adjustment Request	[NA]		[]

20. Other Affected Documents: (NOTE: Documents listed below will not be revised by this ECN.) Signatures below indicate that the signing organization has been notified of other affected documents listed below.

Document Number/Revision	Document Number/Revision	Document Number Revision
JCS Component Index	POP-60D-006 Rev. 11	

21. Approvals

	Signature	Date		Signature	Date
Design Authority - R. N. Wagner	[signature]	6/22/98	Design Agent - R. N. Wagner	[signature]	6/22/98
Cog. Eng. - R. N. Wagner	[signature]	6/22/98	PE		
Cog. Mgr. - R. J. Nicklas (Informal Design Review)	[signature] FOR	6-22-98	QA		
QA			Safety		
Safety			Design		
Environ.			Environ.		
Other			Other		

DEPARTMENT OF ENERGY

Signature or a Control Number that tracks the Approval Signature

ADDITIONAL

BLOCK 13a CONTINUED

H-2-88976, Sheet 1, Rev. 6, Zones C6–F6

IS:

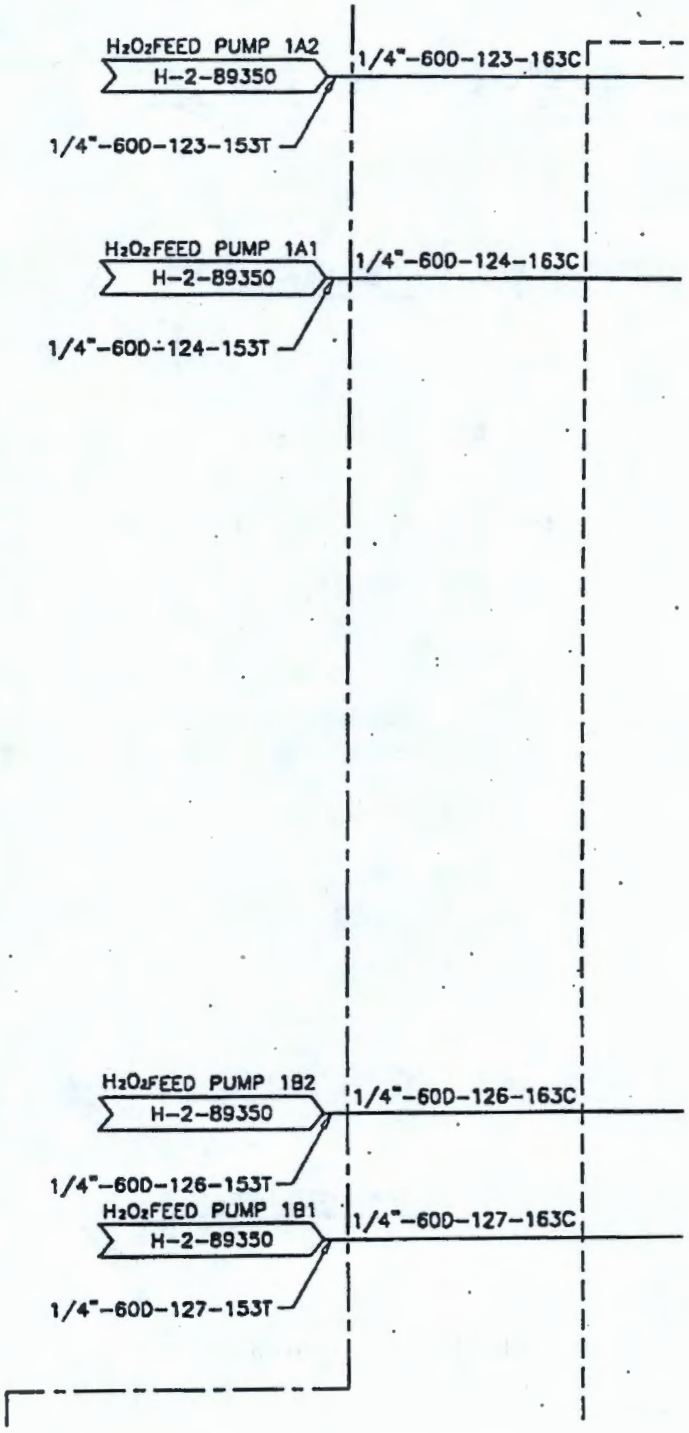

H-2-88976, Sheet 1, Rev. 6, Zones C6–F6

CHANGE TO:

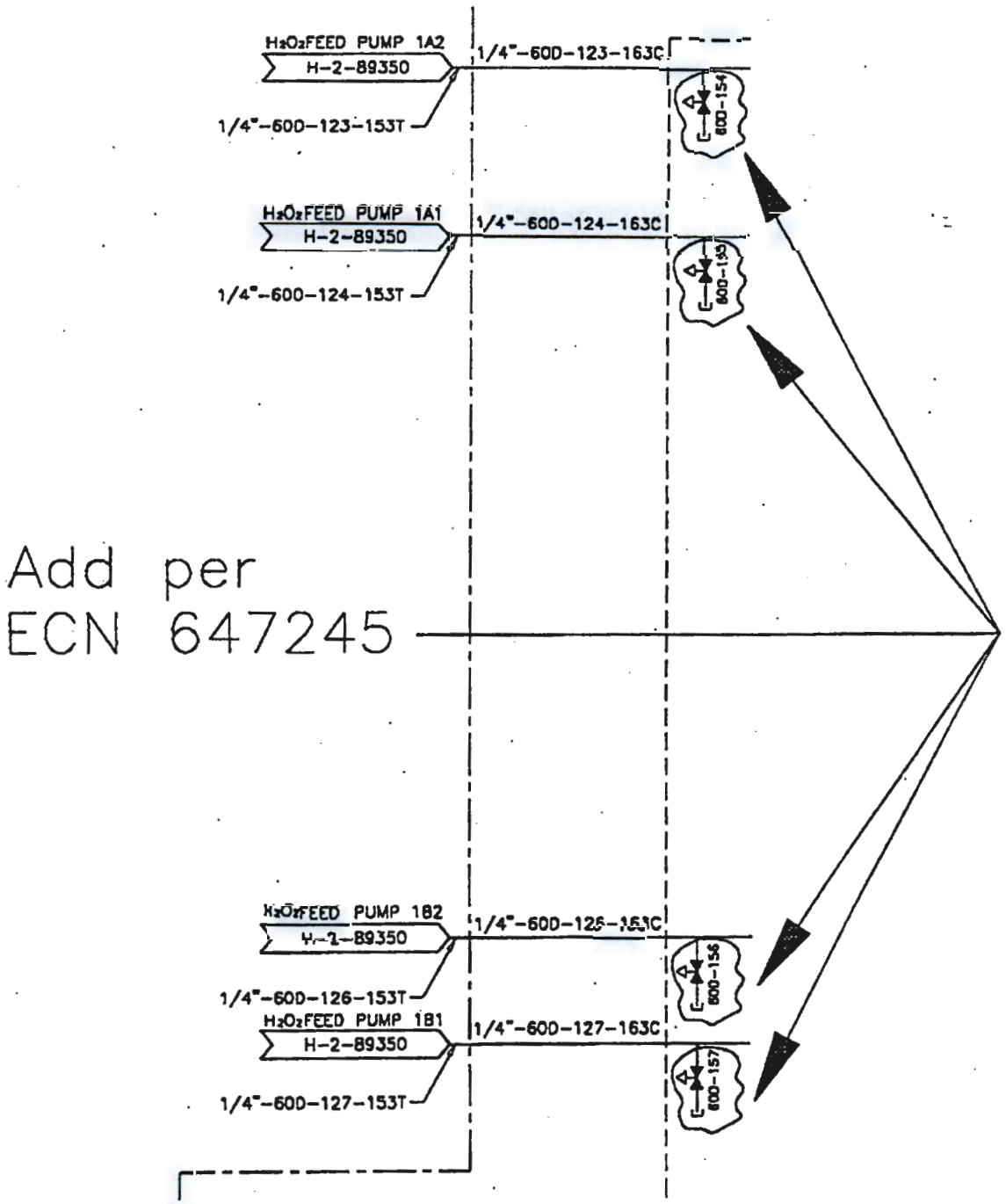

H-2-89342, Sheet 1, Rev. 6, Zones C7–F7

IS:

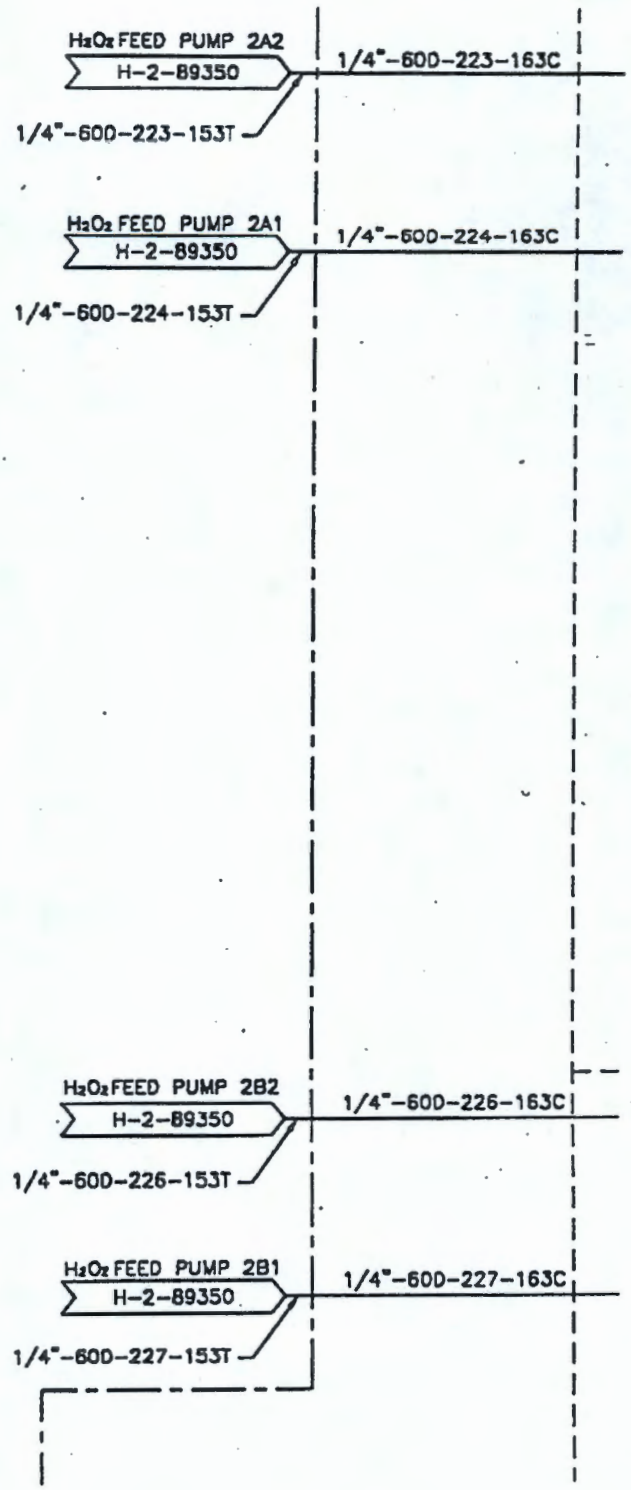

H-2-89342, Sheet 1, Rev. 6, Zones C7–F7

CHANGE TO:

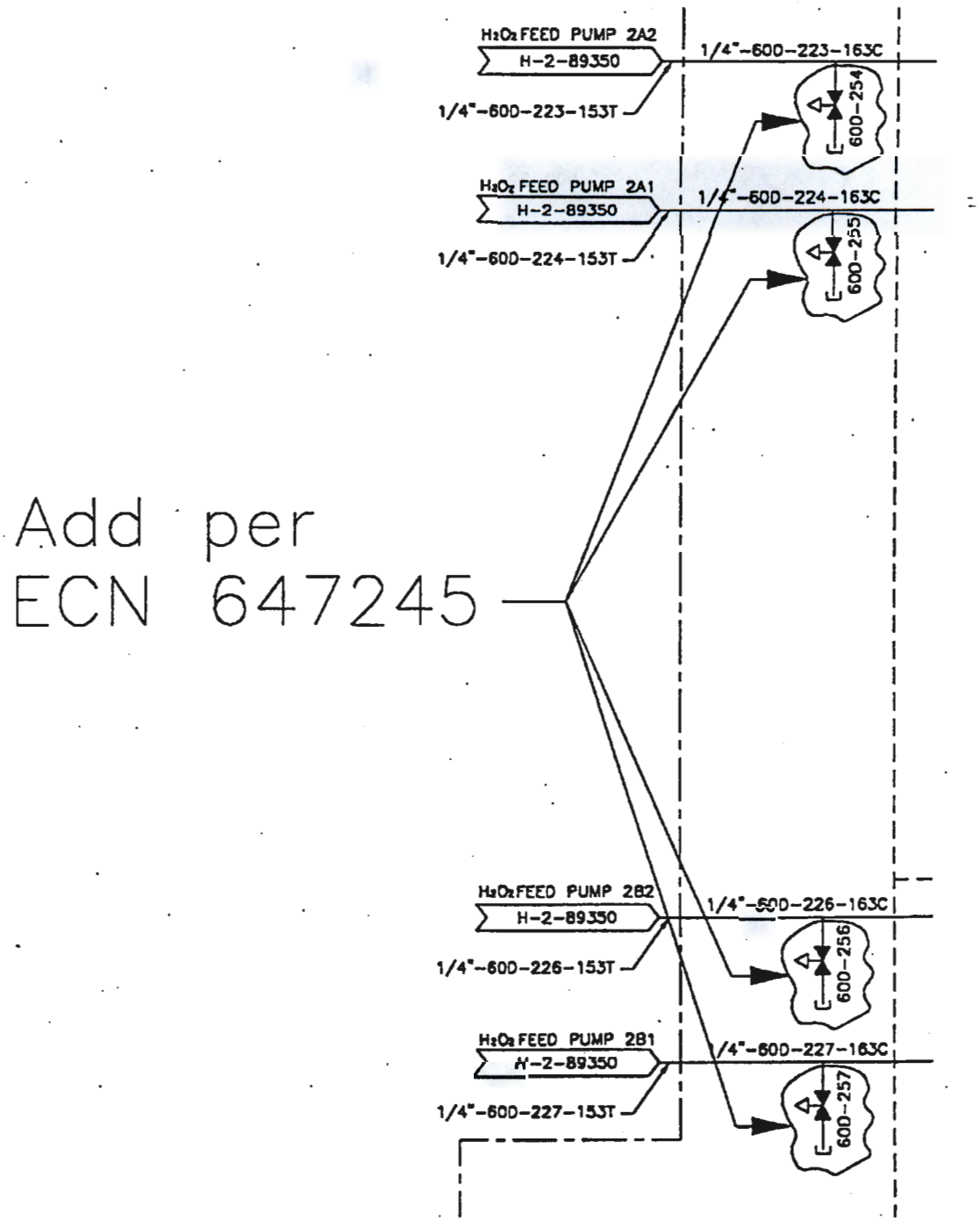

H-2-89350, Sheet 1, Rev. 8, Zone B6

IS:

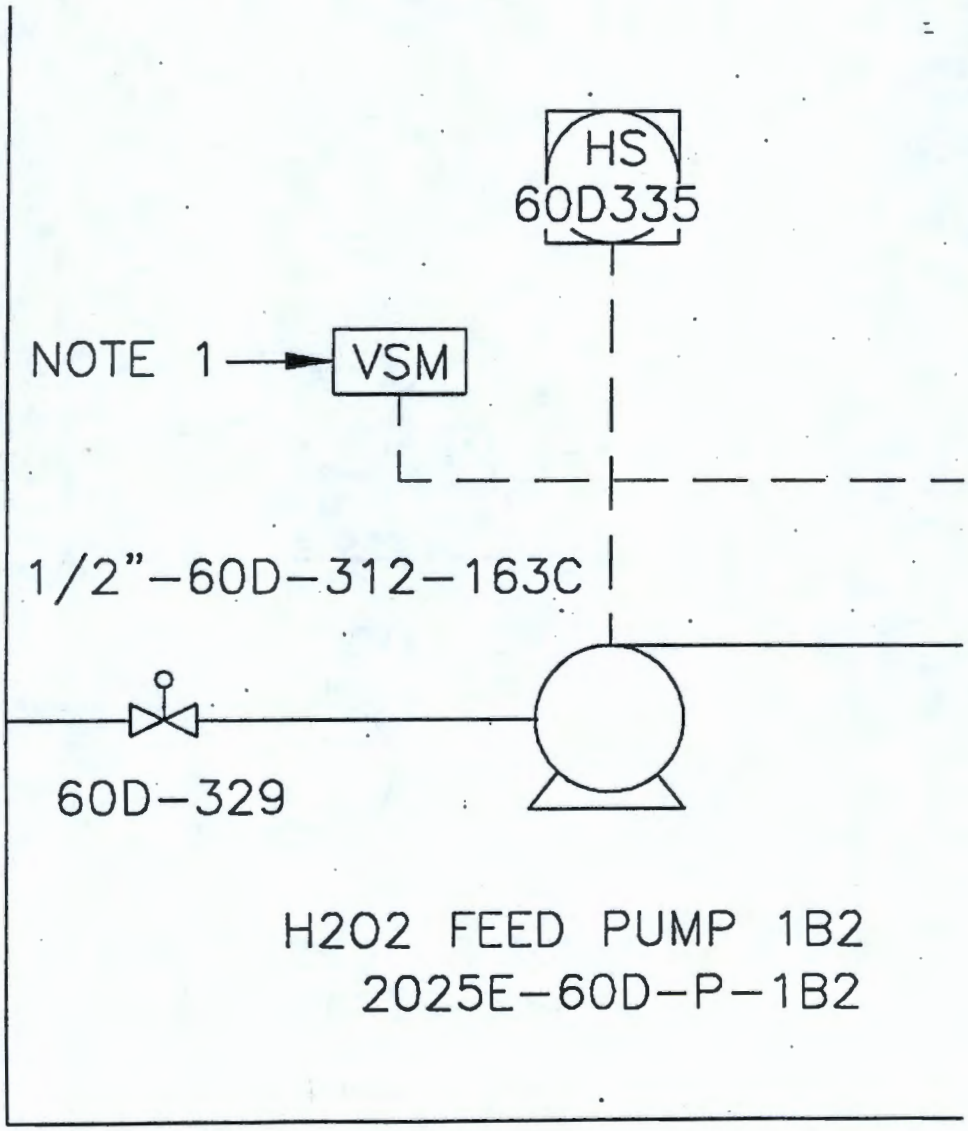

H-2-89350, Sheet 1, Rev. 8, Zone B6

CHANGE TO:

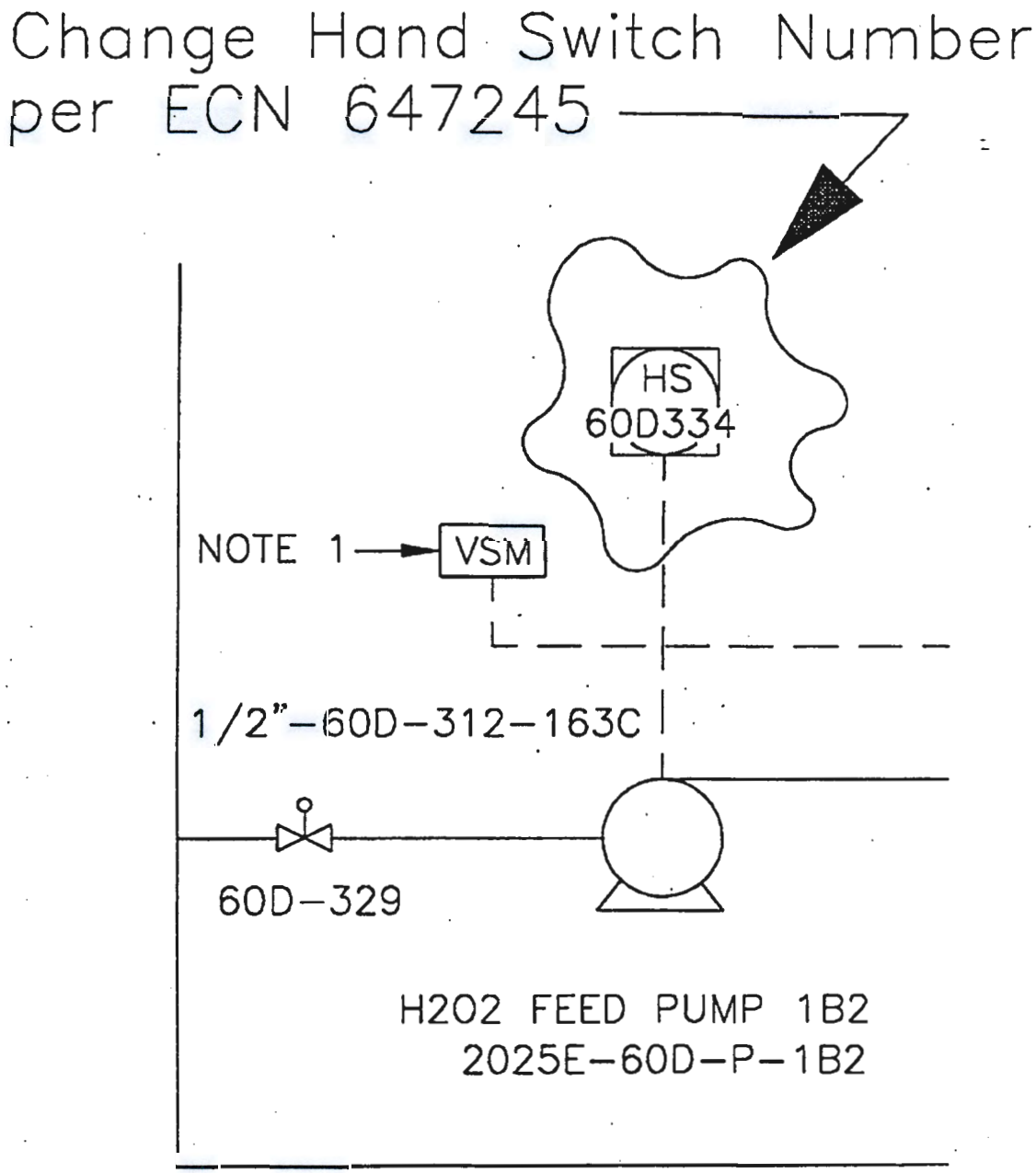

CPF 18

ENGINEERING CHANGE NOTICE ESSENTIAL

1. ECN 642800

Proj. ECN

2. ECN Category (mark one)	3. Originator's Name, Organization, MSIN, and Telephone No.	4. USQ Required?	5. Date
Supplemental [X]	LL Lin, 32230, S6-72, 372-2759	[] Yes [X] No	10/01/97
Direct Revision []	6. Project Title/No./Work Order No.	7. Bldg./Sys./Fac. No.	8. Approval Designator
Change ECN []	Provide Sample Point on Polisher Skid Drain Header/A4055	2025E/60G	NA
Temporary []			
Standby []			
Supersedure [X]			
Cancel/Void []	9. Document Numbers Changed by this ECN (includes sheet no. and rev.)	10. Related ECN No(s).	11. Related PO No.
	H-2-88983, Rev ~~6~~ 7, Sh 1	ECN-192548	None

12a. Modification Work	12b. Work Package No.	12c. Modification Work Complete	12d. Restored to Original Condition (Temp. or Standby ECN only)
[X] Yes (fill out Blk. 12b)	EL-95-000233		NA
[] No (NA Blks. 12b, 12c, 12d)		Design Authority/Cog. Engineer Signature & Date	Design Authority/Cog. Engineer Signature & Date

13a. Description of Change

13b. Design Baseline Document? [X] Yes [] No

This ECN supersedes ECN 192548 in its entirety.

Description of Changes:

Affected documents:

ECN-192548
H-2-88983 Rev 6 P&ID, Polisher

See pages 3 and 4 of this ECN for details.

14a. Justification (mark one)

Criteria Change	[]	Design Improvement	[X]	Environmental	[]	Facility Deactivation	[]
As-Found	[X]	Facilitate Const	[]	Const. Error/Omission	[]	Design Error/Omission	[]

14b. Justification Details

A sample valve is needed at the polisher drain header to allow sampling and determination of the adequacy of the SLOW RINSE and FAST RINSE steps of the polisher regeneration.

This ECN also corrects drawing errors.

15. Distribution (include name, MSIN, and no. of copies)

L. L. Lin, S6-72, 1
N. J. Sullivan, S6-72, 1
D. P. Nelsen, S6-71, 1
D. L. Tubbs, S6-74, 1
~~ETF Tech Library, S6-72~~
~~Stations 4,30,5,3,15,16~~

J. E. Geary, S6-71, 1
E. A. McNamar, S6-72, 1
R. N. Wagner, S6-72, 1

RELEASE STAMP
OCT 08 1997
DATE: HANFORD RELEASE ID:
STA: 30 25

ENGINEERING CHANGE NOTICE	Page 2 of 4	1. ECN (use no. from pg. 1) 642800

16. Design Verification Required	17. Cost Impact				18. Schedule Impact (days)	
	ENGINEERING		CONSTRUCTION			
[X] Yes	Additional	[] $	Additional	[] $	Improvement	[]
[] No	Savings	[] $	Savings	[] $	Delay	[]

19. Change Impact Review: Indicate the related documents (other than the engineering documents identified on Side 1) that will be affected by the change described in Block 13. Enter the affected document number in Block 20.

SDD/DD	[na]	Seismic/Stress Analysis	[na]	Tank Calibration Manual	[na]
Functional Design Criteria	[]	Stress/Design Report	[]	Health Physics Procedure	[]
Operating Specification	[]	Interface Control Drawing	[]	Spares Multiple Unit Listing	[]
Criticality Specification	[]	Calibration Procedure	[]	Test Procedures/Specification	[]
Conceptual Design Report	[]	Installation Procedure	[]	Component Index	[X]
Equipment Spec.	[]	Maintenance Procedure	[]	ASME Coded Item	[NA]
Const. Spec.	[]	Engineering Procedure	[]	Human Factor Consideration	[]
Procurement Spec.	[]	Operating Instruction	[]	Computer Software	[]
Vendor Information	[X]	Operating Procedure	[X]	Electric Circuit Schedule	[]
OM Manual	[NA]	Operational Safety Requirement	[]	ICRS Procedure	[]
FSAR/SAR	[]	IEFD Drawing	[X]	Process Control Manual/Plan	[]
Safety Equipment List	[]	Cell Arrangement Drawing	[NA]	Process Flow Chart	[]
Radiation Work Permit	[]	Essential Material Specification	[]	Purchase Requisition	[]
Environmental Impact Statement	[]	Fac. Proc. Samp. Schedule	[]	Tickler File	[]
Environmental Report	[]	Inspection Plan	[]		[]
Environmental Permit	[]	Inventory Adjustment Request	[]		[]

20. Other Affected Documents: (NOTE: Documents listed below will not be revised by this ECN.) Signatures below indicate that the signing organization has been notified of other affected documents listed below.

Document Number/Revision	Document Number/Revision	Document Number Revision
POP 60G-002, POP 60-006		

21. Approvals

	Signature	Date		Signature	Date
Design Authority	L. L. Lin	10-1-97	Design Agent		10-1-97
Cog. Eng.	L. L. Lin	10-1-97	PE		
Cog. Mgr.	N. J. Sullivan	10-1-97	QA		
QA	(informal review)		Safety		
Safety			Design		
Environ.			Environ.		
Other			Other		

DEPARTMENT OF ENERGY

Signature or a Control Number that tracks the Approval Signature

ADDITIONAL

1. Install a 1/2 inch sample valve, 60G-044, at the polisher drain header (3"-60G-022-155V). Material type and pressure rating for the installation shall be compatible with ETF pipe class 155V for INDECK.

2. Correct drawing error for valve number call out. Change 60G-407 to 60G-036.

3. Correct drawing error on polisher waste drain header 3"-60G-022-155V.

4. Piping, fittings and jointing methods are to meet the requirements of ETF piping spec class 155V. Install, inspect and test the new piping installation in accordance with ASME B31.3-1993 edition and addenda for Normal Fluid Service.

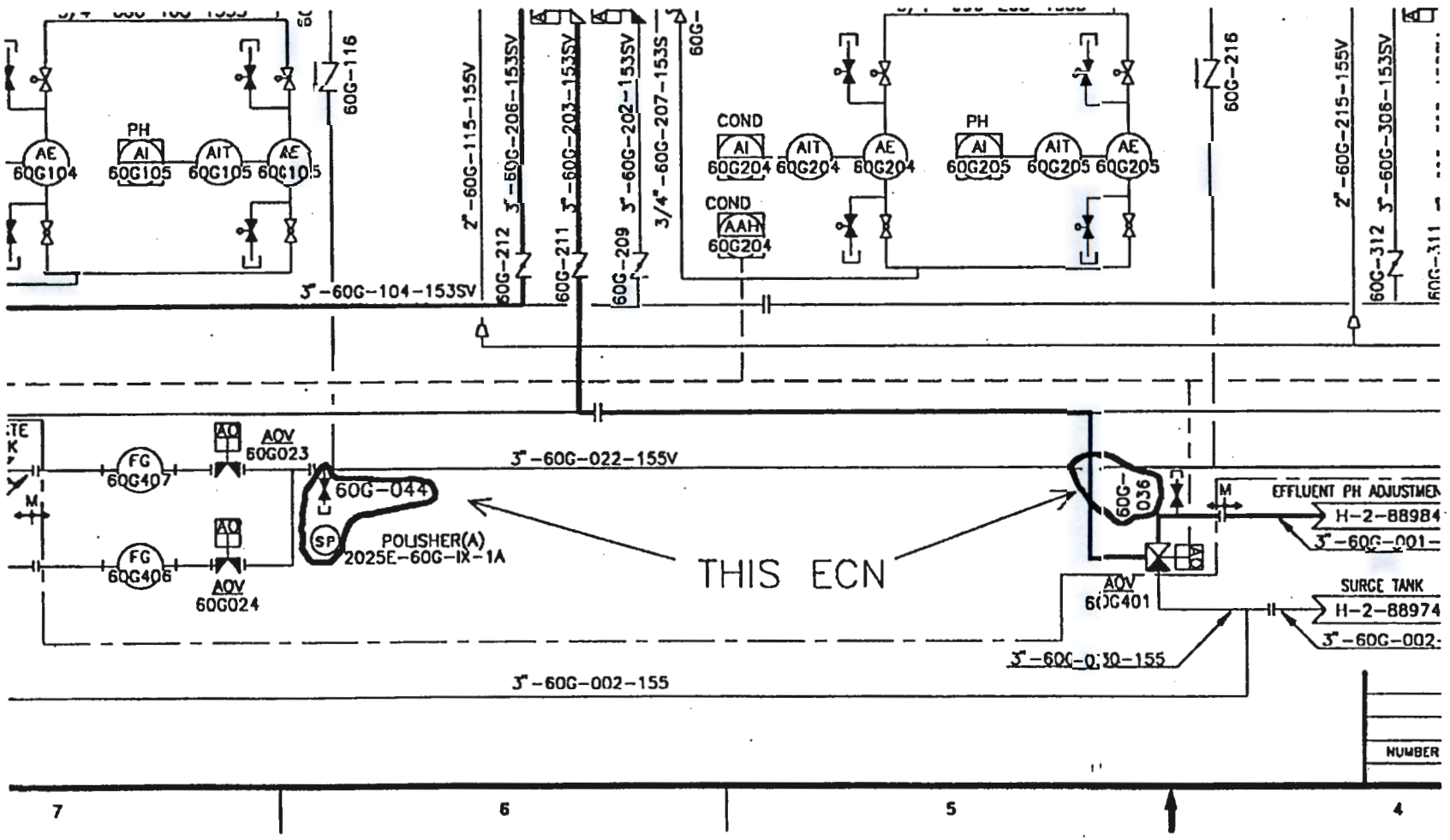

ECN 642800
Page 4 of 4
H-2-88983

S

ESSENTIAL

ENGINEERING CHANGE NOTICE

CDF 68

Page 1 of 4

1. ECN 646658L

Proj. ECN

2. ECN Category (mark one)	3. Originator's Name, Organization, MSIN, and Telephone No.	4. USQ Required?	5. Date
Supplemental [X] DE 11/5/98 Direct Revisio [] Change ECN [] Temporary [X] Standby [] Supersedure [] Cancel/Void []	DE SCULLY/32230/S6-72/372-3592	[] Yes [X] No	11/05/98
	6. Project Title/No./Work Order No. AJ60 101697 REMOVE EVAPORATOR pH PROBE	7. Bldg./Sys./Fac. No. 2025E/60I	8. Approval Designator NA
	9. Document Numbers Changed by this ECN (includes sheet no. and rev.) H-2-89335, REV 10, Sht 1	10. Related ECN No(s). NONE	11. Related PO No. NONE

12a. Modification Work	12b. Work Package No.	12c. Modification Work Complete	12d. Restored to Original Condition (Temp. or Standby ECN only)
[X] Yes (fill out Blk. 12b) [] No (NA Blks. 12b, 12c, 12d)	EL- 97-00761/W	NOV 06 1998 25 DE Scully 11/6/98 Design Authority/Cog. Engineer Signature & Date	Design Authority/Cog. Engineer Signature & Date

13a. Description of Change

13b. Design Baseline Document? [X] Yes [] No

Remove pH probe AE-60I135 from evaporator brine recirculation line. Install a stainless steel pipe plug in its place.

The MCS graphic for the evaporator brine pH, AI-60I-135, will be altered to indicate "out of service."

nstall and test the new installation in accordance with ASME B31.3 and Addenda for Category D Fluid Service.

14a. Justification (mark one)

Criteria Change	[]	Design Improvement	[]	Environmental	[]	Facility Deactivation	[]
As-Found	[]	Facilitate Const	[]	Const. Error/Omission	[]	Design Error/Omission	[X]

14b. Justification Details

The pH probe specified by Adtechs is not suitable as it fails after a few weeks of use. A probe suitable for this application is being sought. In the interim the original probe is be be removed and a pipe plug installed in its place.

15. Distribution (include name, MSIN, and no. of copies)

JE Geary	S6-72	1	DE Scully	S6-72	1*
NJ Sullivan	S6-72	1	JM Petty	S6-74	1
Mark Bowman	S6-72	1	Charles Skogley	T4-05	1
~~J. Isdell~~	~~G3-17~~	~~1*~~	WCC Planning	S6-72	1*
*adv cy		11/6/98	BS Darling	T4-05	1
			MC Teats	S6-72	1

RELEASE STAMP

NOV 06 1998

DATE:

HANFORD RELEASE

STA: 30

ID: 25

A-7900-013-2 (05/96) GEF095

A-7900-013-1

ENGINEERING CHANGE NOTICE	Page 2 of 4	1. ECN (use no. from pg. 1) 646658L

16. Design Verification Required	17. Cost Impact N/A				18. Schedule Impact (days) N/A	
	ENGINEERING		CONSTRUCTION			
[X] Yes	Additional	[] $	Additional	[] $	Improvement	[]
[] No	Savings	[] $	Savings	[] $	Delay	[]

19. Change Impact Review: Indicate the related documents (other than the engineering documents identified on Side 1) that will be affected by the change described in Block 13. Enter the affected document number in Block 20.

SDD/DD	[]	Seismic/Stress Analysis	[]	Tank Calibration Manual	[]
Functional Design Criteria	[]	Stress/Design Report	[]	Health Physics Procedure	[]
Operating Specification	[]	Interface Control Drawing	[]	Spares Multiple Unit Listing	[]
Criticality Specification	[]	Calibration Procedure	[]	Test Procedures/Specification	[]
Conceptual Design Report	[]	Installation Procedure	[]	Component Index	[]
Equipment Spec.	[]	Maintenance Procedure	[]	ASME Coded Item	[]
Const. Spec.	[]	Engineering Procedure	[]	Human Factor Consideration	[]
Procurement Spec.	[]	Operating Instruction	[]	Computer Software	[]
Vendor Information	[]	Operating Procedure	[]	Electric Circuit Schedule	[]
OM Manual	[]	Operational Safety Requirement	[]	ICRS Procedure	[]
FSAR/SAR	[]	IEFD Drawing	[]	Process Control Manual/Plan	[]
Safety Equipment List	[]	Cell Arrangement Drawing	[]	Process Flow Chart	[]
Radiation Work Permit	[]	Essential Material Specification	[]	Purchase Requisition	[]
Environmental Impact Statement	[]	Fac. Proc. Samp. Schedule	[]	Tickler File	[]
Environmental Report	[]	Inspection Plan	[]		[]
Environmental Permit	[]	Inventory Adjustment Request	[]	N/A	[]

20. Other Affected Documents: (NOTE: Documents listed below will not be revised by this ECN.) Signatures below indicate that the signing organization has been notified of other affected documents listed below.

Document Number/Revision	Document Number/Revision	Document Number Revision

21. Approvals

	Signature	Date		Signature	Date
Design Authority DE Scully	DE Scully	11/5/98	Design Agent DE Scully	DE Scully	11/5/98
Cog. Eng. DE Scully	DE Scully	11/5/98	PE		
Cog. Mgr. NL Sullivan for RJ Nicklas	NL Sullivan	11-5-98	QA		
QA			Safety		
Safety			Design		
Environ.			Environ.		
Other			Other		
Systems Lead					

Notes:
1) The Systems Lead will provide design verification. NL Sullivan (informal review) 11-5-98

DEPARTMENT OF ENERGY

ADDITIONAL

A-7900-013-3 (05/96) GEF096

WAS BEFORE

p. 3/4

ECN 646658 L

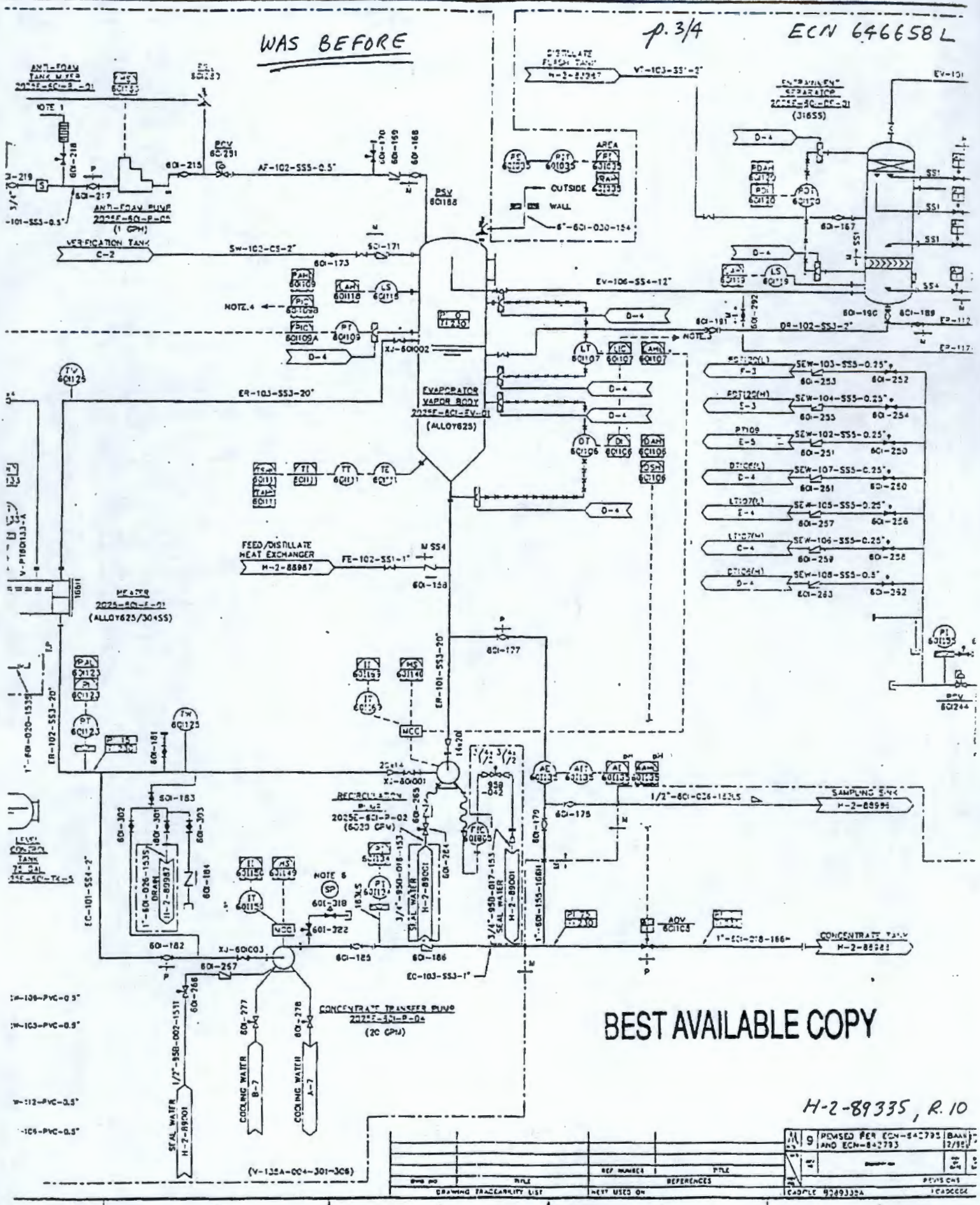

IS NOW

p. 4/4 ECN 646658L

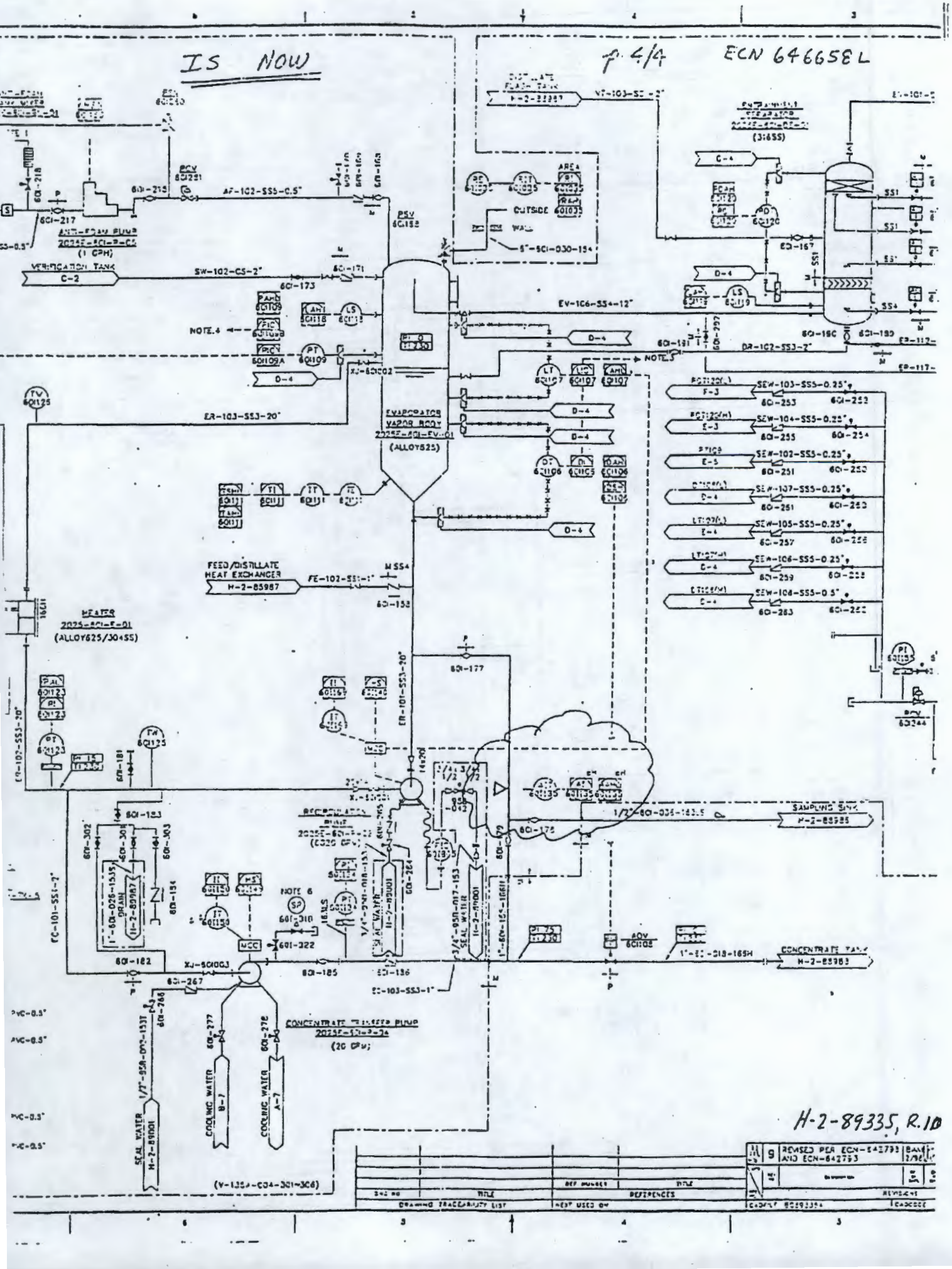

ESSENTIAL 6 6/2/97

ENGINEERING CHANGE NOTICE

Page 1 of 4

1. ECN 641719

Proj. ECN

CPF 18

2. ECN Category (mark one)	3. Originator's Name, Organization, MSIN, and Telephone No.	4. USQ Required?	5. Date
Supplemental [X] Direct Revision [ ] Change ECN [ ] Temporary [ ] Standby [ ] Supersedure [ ] Cancel/Void [ ]	DE SCULLY/32230/S6-72/372-3592	[] Yes [X] No	6/2/97
	6. Project Title/No./Work Order No.	7. Bldg./Sys./Fac. No.	8. Approval Designator
	Provide Window Washer for ETF Evaporator	2025E/60I	n/a
	9. Document Numbers Changed by this ECN (includes sheet no. and rev.)	10. Related ECN No(s).	11. Related PO No.
	H-2-89335, rev 7, sht 1	none	

12a. Modification Work	12b. Work Package No.	12c. Modification Work Complete	12d. Restored to Original Condition (Temp. or Standby ECN only)
[X] Yes (fill out Blk. 12b) [] No (NA Blks. 12b, 12c, 12d)	EL-97-00425	Design Authority/Cog. Engineer Signature & Date	Design Authority/Cog. Engineer Signature & Date

13a. Description of Change — 13b. Design Baseline Document? [X] Yes [] No

Install a SS 316 bleed ring, drilled and tapped to 1/8" NPT, behind the evaporator vapor body observation window. Route distillate to this ring via 1/4 SS tubing. Provide ball valve for operator use in cleaning window.

System Lead has provided design verification (informal review).

Provide "normally closed" status for valve 60I-246.

14a. Justification (mark one)

Criteria Change	[]	Design Improvement	[X]	Environmental	[]	Facility Deactivation	[]
As-Found	[]	Facilitate Const	[]	Const. Error/Omission	[]	Design Error/Omission	[]

14b. Justification Details

This window occaisonally becomes fogged or obscured with brine/suspended solids that are sloshed up into the window during normal evaporator operation. This window is extremely useful, if not at times critical, for monitoring evaporator operation. It therefore needs to be kept clean for clear observation of the evaporating brine. This washer will allow the operator to clean the window at will by temporarily opening the ball valve located near the window.

SYA 3, 4, 5, 16, 30

15. Distribution (include name, MSIN, and no. of copies)

DE SCULLY, S6-72, 1	RJ HUTH, S6-72, 1
DP NELSEN, S6-71, 1	RS WEBER, S6-71, 1
JE GEARY, S6-71, 1	BS DARLING, S6-71, 1
NJ SULLIVAN, S6-72, 1	AK YOAKUM, S6-71, 1
JL VIGUE, S6-74, 1	

RELEASE STAMP

JUN 03 1997

HANFORD RELEASE

DATE: STA: 30 UC: 25

A-7900-013-2 (05/96) GEF095

A-7900-013-1

ENGINEERING CHANGE NOTICE	Page 2 of ~~4~~ 6	1. ECN (use no. from pg. 1) 641719

16. Design Verification Required	17. Cost Impact N/A				18. Schedule Impact (days) N/A	
	ENGINEERING		CONSTRUCTION			
[X] Yes	Additional	[] $	Additional	[] $	Improvement	[]
[] No	Savings	[] $	Savings	[] $	Delay	[]

19. Change Impact Review: Indicate the related documents (other than the engineering documents identified on side 1) that will be affected by the change described in Block 13. Enter the affected document number in Block 20.

SDD/DD	[]	Seismic/Stress Analysis	[]	Tank Calibration Manual	[]
Functional Design Criteria	[]	Stress/Design Report	[]	Health Physics Procedure	[]
Operating Specification	[]	Interface Control Drawing	[]	Spares Multiple Unit Listing	[]
Criticality Specification	[]	Calibration Procedure	[]	Test Procedures/Specification	[]
Conceptual Design Report	[]	Installation Procedure	[]	Component Index	[]
Equipment Spec.	[]	Maintenance Procedure	[]	ASME Coded Item	[]
Const. Spec.	[]	Engineering Procedure	[]	Human Factor Consideration	[]
Procurement Spec.	[]	Operating Instruction	[]	Computer Software	[]
Vendor Information	[]	Operating Procedure	[X]	Electric Circuit Schedule	[]
OM Manual	[]	Operational Safety Requirement	[]	ICRS Procedure	[]
FSAR/SAR	[]	IEFD Drawing	[]	Process Control Manual/Plan	[]
Safety Equipment List	[]	Cell Arrangement Drawing	[]	Process Flow Chart	[]
Radiation Work Permit	[]	Essential Material Specification	[]	Purchase Requisition	[]
Environmental Impact Statement	[]	Fac. Proc. Samp. Schedule	[]	Tickler File	[]
Environmental Report	[]	Inspection Plan	[]		[]
Environmental Permit	[]	Inventory Adjustment Request	[]		[]

20. Other Affected Documents: (NOTE: Documents listed below will not be revised by this ECN.) Signatures below indicate that the signing organization has been notified of other affected documents listed below.

Document Number/Revision	Document Number/Revision	Document Number Revision
POP-60I-003		

21. Approvals

	Signature	Date		Signature	Date
Design Authority	DE Scully DE Scully	6/2/97	Design Agent	DE Scully DE Scully	6/2/97
Cog. Eng.	DE Scully DE Scully	6/2/97	PE		
Cog. Mgr.	NL Sullivan NL Sullivan	6-2-97	QA		
QA			Safety		
Safety			Design		
Environ.			Environ.		
Other			Other		

DEPARTMENT OF ENERGY

Signature or a Control Number that tracks the Approval Signature

ADDITIONAL

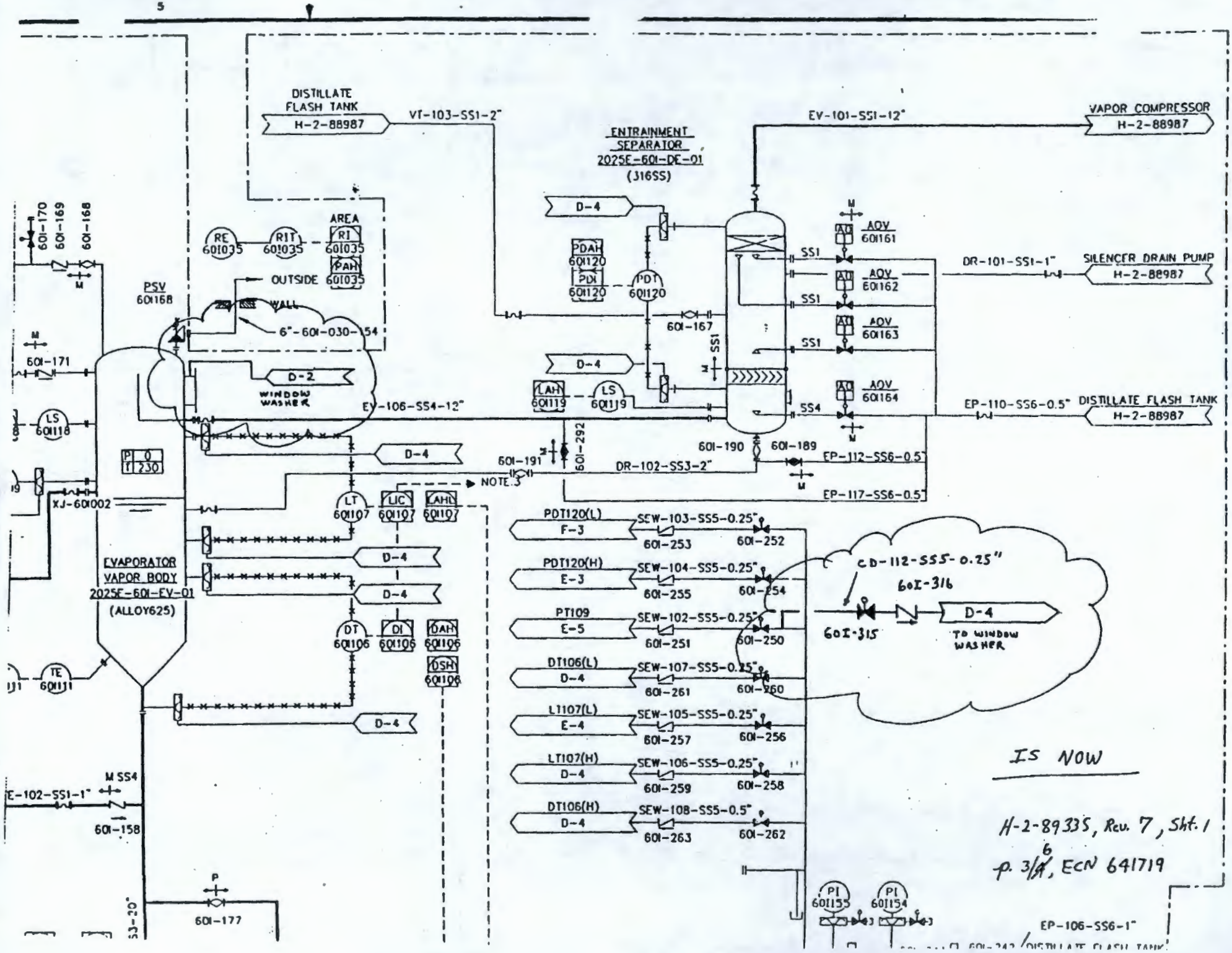
DISTILLATE FLASH TANK
H-2-88987
VT-103-SS1-2"
ENTRAINMENT SEPARATOR
2025E-601-DE-01
(316SS)
EV-101-SS1-12"
VAPOR COMPRESSOR
H-2-88987
AREA
RE 601035
RIT 601035
RI 601035
PAH 601035
OUTSIDE WALL
6"-601-030-154
PSV 601168
601-170
601-169
601-168
601-171
LS 601118
D-2
WINDOW WASHER
EV-106-SS4-12"
D-4
PDAH 601120
PDI 601120
PDT 601120
601-167
SS1
LAH 601119
LS 601119
AOV 601161
AOV 601162
AOV 601163
AOV 601164
SS4
DR-101-SS1-1"
SILENCER DRAIN PUMP
H-2-88987
EP-110-SS6-0.5"
DISTILLATE FLASH TANK
H-2-88987
601-190
601-189
EP-112-SS6-0.5"
601-191
601-292
DR-102-SS3-2"
NOTE 3
EP-117-SS6-0.5"
XJ-601002
LT 601107
LIC 601107
LAHL 601107
EVAPORATOR VAPOR BODY
2025E-601-EV-01
(ALLOY625)
DT 601106
DI 601106
DAH 601106
DSH 601106
TE 601131
PDT120(L)
F-3
SEW-103-SS5-0.25"
601-253
601-252
PDT120(H)
E-3
SEW-104-SS5-0.25"
601-255
601-254
PT109
E-5
SEW-102-SS5-0.25"
601-251
601-250
DT106(L)
D-4
SEW-107-SS5-0.25"
601-261
601-260
LT107(L)
E-4
SEW-105-SS5-0.25"
601-257
601-256
LT107(H)
D-4
SEW-106-SS5-0.25"
601-259
601-258
DT106(H)
D-4
SEW-108-SS5-0.5"
601-263
601-262
CD-112-SSS-0.25"
60I-316
60I-315
D-4
TO WINDOW WASHER
IS NOW
H-2-89335, Rev. 7, Sht. 1
p. 3/6, ECN 641719
M SS4
E-102-SS1-1"
601-158
601-177
PI 601155
PI 601154
EP-106-SS6-1"
DISTILLATE FLASH TANK

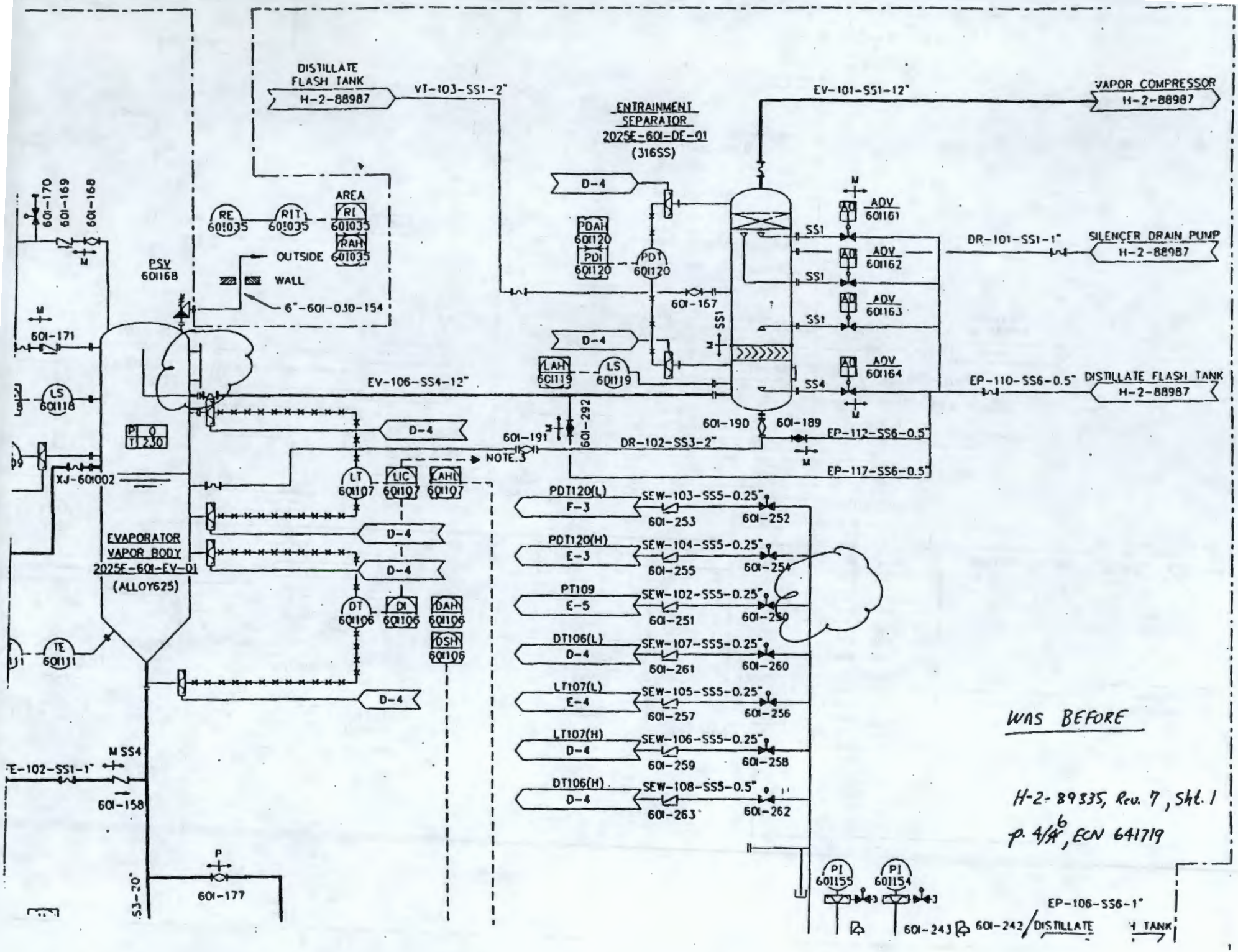
DISTILLATE FLASH TANK
H-2-88987
VT-103-SS1-2"
ENTRAINMENT SEPARATOR
2025E-601-DE-01
(316SS)
EV-101-SS1-12"
VAPOR COMPRESSOR
H-2-88987
601-170
601-169
601-168
RE 601035
RIT 601035
AREA RI 601035
RAH 601035
OUTSIDE
WALL
6"-601-030-154
PSV 601168
601-171
LS 601118
D-4
PDAH 601120
PDI 601120
PDT 601120
601-167
SS1
AOV 601161
AOV 601162
AOV 601163
AOV 601164
DR-101-SS1-1"
SILENCER DRAIN PUMP
H-2-88987
LAH 601119
LS 601119
EV-106-SS4-12"
SS4
EP-110-SS6-0.5"
DISTILLATE FLASH TANK
H-2-88987
601-190
601-189
EP-112-SS6-0.5"
601-191
601-292
DR-102-SS3-2"
NOTE 3
EP-117-SS6-0.5"
XJ-601002
LT 601107
LIC 601107
LAHL 601107
EVAPORATOR VAPOR BODY
2025E-601-EV-01
(ALLOY625)
DT 601106
DI 601106
DAH 601106
DSH 601106
TE 601111
PDT120(L)
F-3
SEW-103-SS5-0.25"
601-253
601-252
PDT120(H)
E-3
SEW-104-SS5-0.25"
601-255
601-254
PT109
E-5
SEW-102-SS5-0.25"
601-251
601-250
DT106(L)
D-4
SEW-107-SS5-0.25"
601-261
601-260
LT107(L)
E-4
SEW-105-SS5-0.25"
601-257
601-256
LT107(H)
D-4
SEW-106-SS5-0.25"
601-259
601-258
DT106(H)
D-4
SEW-108-SS5-0.5"
601-263
601-262
M SS4
E-102-SS1-1"
601-158
601-177
S3-20"
PI 601155
PI 601154
601-243
601-242
EP-106-SS6-1"
DISTILLATE
WAS BEFORE
H-2-89335, Rev. 7, Sht. 1
p. 4/6, ECN 641719

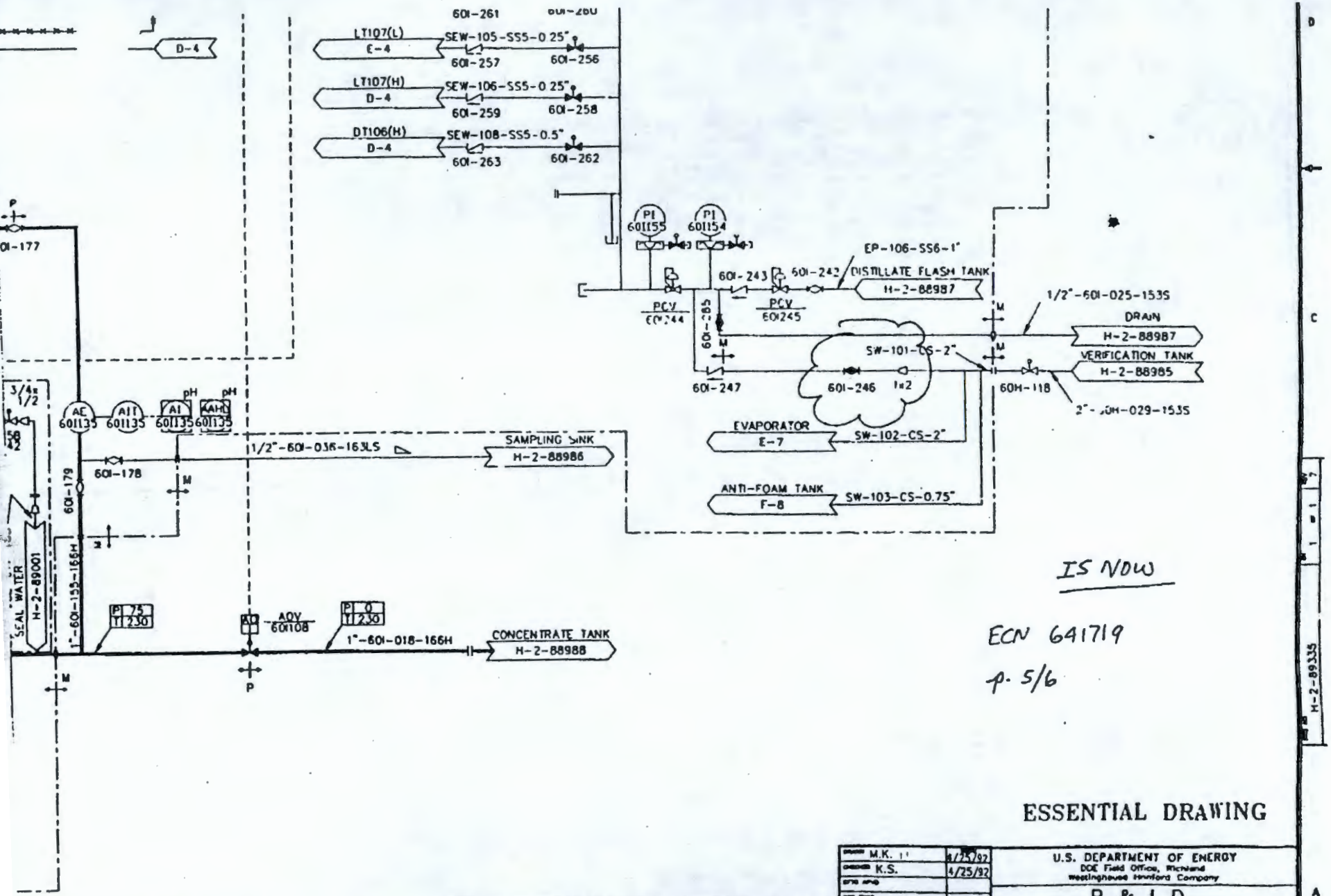
D-4
601-261
601-260
LT107(L)
E-4
SEW-105-SS5-0.25"
601-257
601-256
LT107(H)
D-4
SEW-106-SS5-0.25"
601-259
601-258
DT106(H)
D-4
SEW-108-SS5-0.5"
601-263
601-262
PI 601155
PI 601154
EP-106-SS6-1"
601-243
601-242
DISTILLATE FLASH TANK
H-2-88987
PCV 601244
PCV 601245
601-285
601-247
SW-101-CS-2"
601-246
1x2
1/2"-601-025-153S
DRAIN
H-2-88987
VERIFICATION TANK
H-2-88985
60H-118
2"-60H-029-153S
EVAPORATOR
E-7
SW-102-CS-2"
ANTI-FOAM TANK
F-8
SW-103-CS-0.75"
601-177
3/4x1/2
AE 601135
AIT 601135
AI 601135
AAHL 601135
pH
1/2"-601-036-163LS
SAMPLING SINK
H-2-88986
601-178
601-179
SEAL WATER
H-2-89001
1"-601-155-166H
PI 75
TI 230
AOV 601108
PI 0
TI 230
1"-601-018-166H
CONCENTRATE TANK
H-2-88988
IS NOW
ECN 641719
p. 5/6
ESSENTIAL DRAWING
M.K. 4/25/92
K.S. 4/25/92
B.Y. 4/25/92
U.S. DEPARTMENT OF ENERGY
DOE Field Office, Richland
Westinghouse Hanford Company
P & I D
EVAPORATOR SYSTEM
(1/2)
F
2025E
7004
H-2-89335
7
NONE
7
630942 AND 636742
REVISE PER ECN 630887
REVISIONS
CADFILE B089335A
CADCODE WIN95:ACD2:12.0:SS
REF NUMBER
TITLE
REFERENCES
NEXT USED ON
TRACEABILITY LIST
0-1225-033

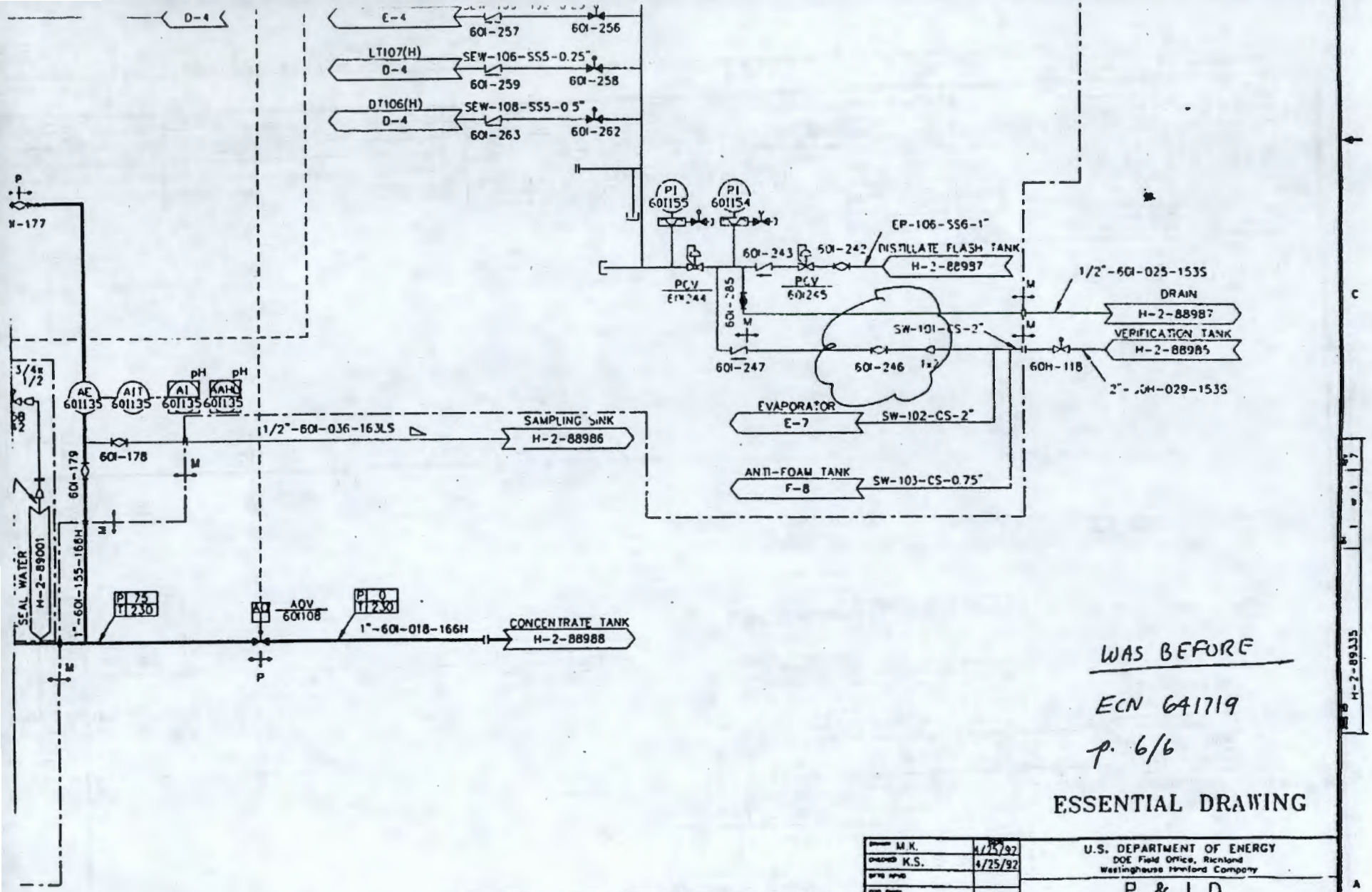

WAS BEFORE

ECN 641719

p. 6/6

ESSENTIAL DRAWING

M.K.	4/25/92	U.S. DEPARTMENT OF ENERGY DOE Field Office, Richland Westinghouse Hanford Company
K.S.	4/25/92	
B.Y.	4/25/92	P & I D EVAPORATOR SYSTEM (1/2)

REV	DESCRIPTION	DRAWN BY	CHECKED BY	ENGR	CHECKED BY	APPROVED BY
7	630942 AND 636742 REVISE PER ECN 630887	BAN 4/30/91	AS 5/6/91	CBS 5/6/91	KSS 5/6/91	

REVISIONS

REF NUMBER	TITLE

REFERENCES

TITLE

TRACEABILITY LIST

NEXT USED ON

CADFILE B089335A

CADCODE WIN95:ACD2:12.0:SS

SIZE	DWG NO	REV NO	DWG NO	REV
F	2025E	7004	H-2-89335	7

SCALE NONE

SHEET 1 OF 1

D-1225-033

S

ENGINEERING CHANGE NOTICE ESSENTIAL

Page 1 of 10

1. ECN 648765

Proj. ECN

cpf 18

2. ECN Category (mark one)	3. Originator's Name, Organization, MSIN, and Telephone No.	4. USQ Required?	5. Date
Supplemental [X] Direct Revision [] Change ECN [] Temporary [] Standby [] Supersedure [] Cancel/Void []	CARMICHAEL,SL, 32730, S6-74, 372-2272	[] Yes [X] No	08/17/98
	6. Project Title/No./Work Order No. REMOVE INSTRUMENTS FROM THIN FILM DRYER ROOM	7. Bldg./Sys./Fac. No. 2025E/60J	8. Approval Designator N/A
	9. Document Numbers Changed by this ECN (includes sheet no. and rev.) SEE BLOCK 13A	10. Related ECN No(s). N/A	11. Related PO No. N/A

12a. Modification Work	12b. Work Package No.	12c. Modification Work Complete	12d. Restored to Original Condition (Temp. or Standby ECN only)
[X] Yes (fill out Blk. 12b) [] No (NA Blks. 12b, 12c, 12d)	EL-96-00561/M	Design Authority/Cog. Engineer Signature & Date	N/A Design Authority/Cog. Engineer Signature & Date

13a. Description of Change 13b. Design Baseline Document? [X] Yes [] No

H-2-89364 SH.1 REV.3 & H-2-89364 SH.4 REV.1:
REMOVE TEMPERATURE TRANSMITTERS, TT-60J-011, TT-60J-018, TT-60J-020 AND TT-60J038 FROM THE THIN FILM DRYER ROOM AND INSTALL THEM ON THE UPPER DECK OF THE THIN FILM DRYER. THE TEMPERATURE ELEMENTS FOR THESE TRANSMITTERS WILL REMAIN IN THE THIN FILM DRYER ROOM AT THEIR PRESENT LOCATIONS.
H-2-89364 SH.1 REV.3 & H-2-89319 SH.1 REV.1:
THE HVAC ROOM TEMPERATURE TRANSMITTER WILL BE MOVED TO THE OUTSIDE WALL BY THE STAIRS WITH THE SENSOR REMAINING IN THE THIN FILM DRYER ROOM.
H-2-88989 SH.1 REV.12 & H-2-89364 SH.2 REV.1:
REMOVE FLOW TRANSMITTER FT-60J-035 FROM THE THIN FILM DRYER ROOM AND LOCATE IT ON THE UPPER DECK OF THE THIN FILM DRYER ON THE POLISHER SIDE. THIS REQUIRES CUTTING THE CONDENSATER DISCHARGE LINE TO THE SURGE (1"-60J-145-153S) AND WELDING IN FLANGES FOR THE TRANSMITTER ORFICE PLATE. THE EXISTING ORFICE WILL BE REMOVED AND A SPACER OR SPOOL PIECE INSTALLED.

14a. Justification (mark one)

Criteria Change	[]	Design Improvement	[X]	Environmental	[]	Facility Deactivation	[]
As-Found	[]	Facilitate Const	[]	Const. Error/Omission	[]	Design Error/Omission	[]

14b. Justification Details

CHANGES MADE TO ALLOW EASIER CALIBRATION OF INSTRUMENTS AND LIMIT THE REQUIRED ENTERIES INTO A RADIOLOGICALLY CONTROLLED AREA.

15. Distribution (include name, MSIN, and no. of copies)

N.J.SULLIVAN	S6-72	1	J.E.GEARY	S6-71	1
A.K.YOAKUM	S6-71	1	J.M.ISDELL	G3-17	1*
D.L.FLYCKT	S6-72	1	D.E.SCULLY	S6-72	1
S.L.CARMICHAEL	S6-74	1 *	WCC PLANNING	S6-72	1*
M.W.BOWMAN	S6-72	1	R.J.HUTH	S6-72	1

* ADVANCED COPY

RELEASE STAMP

AUG 18 1998
HANFORD RELEASE
DATE: STA: 30 ID: 25

A-7900-013-2 (05/96) GEF095

A-7900-013-1

ENGINEERING CHANGE NOTICE	Page 2 of 10	1. ECN (use no. from pg. 1) 648765

16. Design Verification Required	17. Cost Impact						18. Schedule Impact (days)	
	ENGINEERING			CONSTRUCTION				
[X] Yes	Additional	[NA]	$	Additional	[NA]	$	Improvement	[NA]
[ ] No	Savings	[NA]	$	Savings	[NA]	$	Delay	[NA]

19. Change Impact Review: Indicate the related documents (other than the engineering documents identified on Side 1) that will be affected by the change described in Block 13. Enter the affected document number in Block 20.

SDD/DD	[NA]	Seismic/Stress Analysis	[NA]	Tank Calibration Manual	[NA]
Functional Design Criteria	[NA]	Stress/Design Report	[NA]	Health Physics Procedure	[NA]
Operating Specification	[NA]	Interface Control Drawing	[NA]	Spares Multiple Unit Listing	[NA]
Criticality Specification	[NA]	Calibration Procedure	[NA]	Test Procedures/Specification	[NA]
Conceptual Design Report	[NA]	Installation Procedure	[NA]	Component Index	[NA]
Equipment Spec.	[NA]	Maintenance Procedure	[NA]	ASME Coded Item	[NA]
Const. Spec.	[NA]	Engineering Procedure	[NA]	Human Factor Consideration	[NA]
Procurement Spec.	[NA]	Operating Instruction	[NA]	Computer Software	[NA]
Vendor Information	[NA]	Operating Procedure	[NA]	Electric Circuit Schedule	[NA]
OM Manual	[NA]	Operational Safety Requirement	[NA]	ICRS Procedure	[NA]
FSAR/SAR	[NA]	IEFD Drawing	[NA]	Process Control Manual/Plan	[NA]
Safety Equipment List	[NA]	Cell Arrangement Drawing	[NA]	Process Flow Chart	[NA]
Radiation Work Permit	[NA]	Essential Material Specification	[NA]	Purchase Requisition	[NA]
Environmental Impact Statement	[NA]	Fac. Proc. Samp. Schedule	[NA]	Tickler File	[NA]
Environmental Report	[NA]	Inspection Plan	[NA]		[NA]
Environmental Permit	[NA]	Inventory Adjustment Request	[NA]		[NA]

20. Other Affected Documents: (NOTE: Documents listed below will not be revised by this ECN.) Signatures below * indicate that the signing organization has been notified of other affected documents listed below.

Document Number/Revision	Document Number/Revision	Document Number Revision
NONE		

21. Approvals

	Signature	Date		Signature	Date
Design Authority D.E.SCULLY	for DES	8-17-98	Design Agent	for DES	8-17-98
Cog. Eng. D.E.SCULLY	for DES	8-17-98	PE		
Cog. Mgr. N.J.SULLIVAN		8-17-98	QA		
QA			Safety		
Safety			Design		
Environ.			Environ.		
Other			Other		
INFORMAL REVIEW	C M Toure	8/17/98			
INFORMAL REVIEW	S L Cambal	8/17/98			

DEPARTMENT OF ENERGY

Signature or a Control Number that tracks the Approval Signature

ADDITIONAL

^C

^GMACPATH^GEF1000^G

H-2-88989

WAS

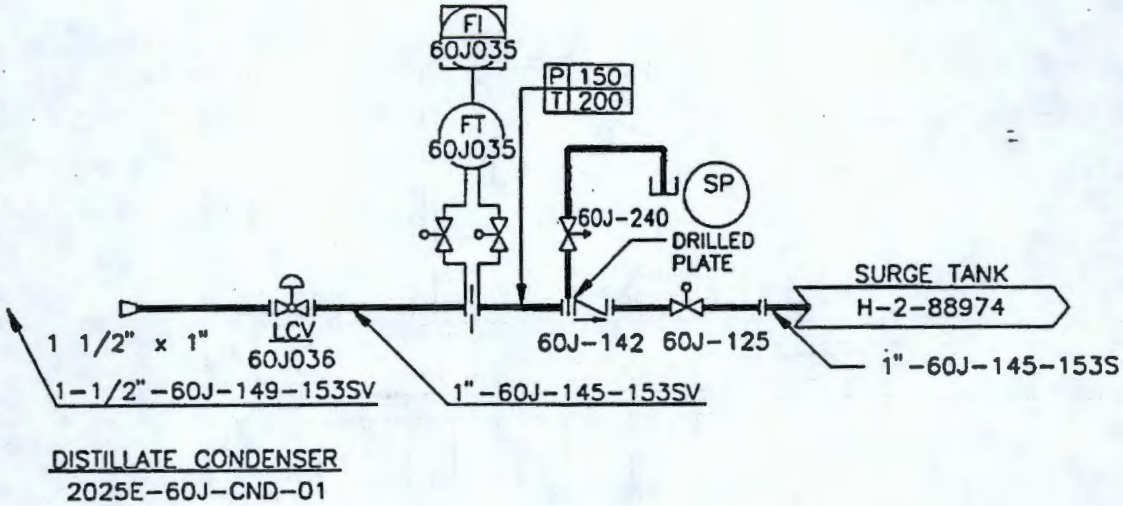

CHANGE TO

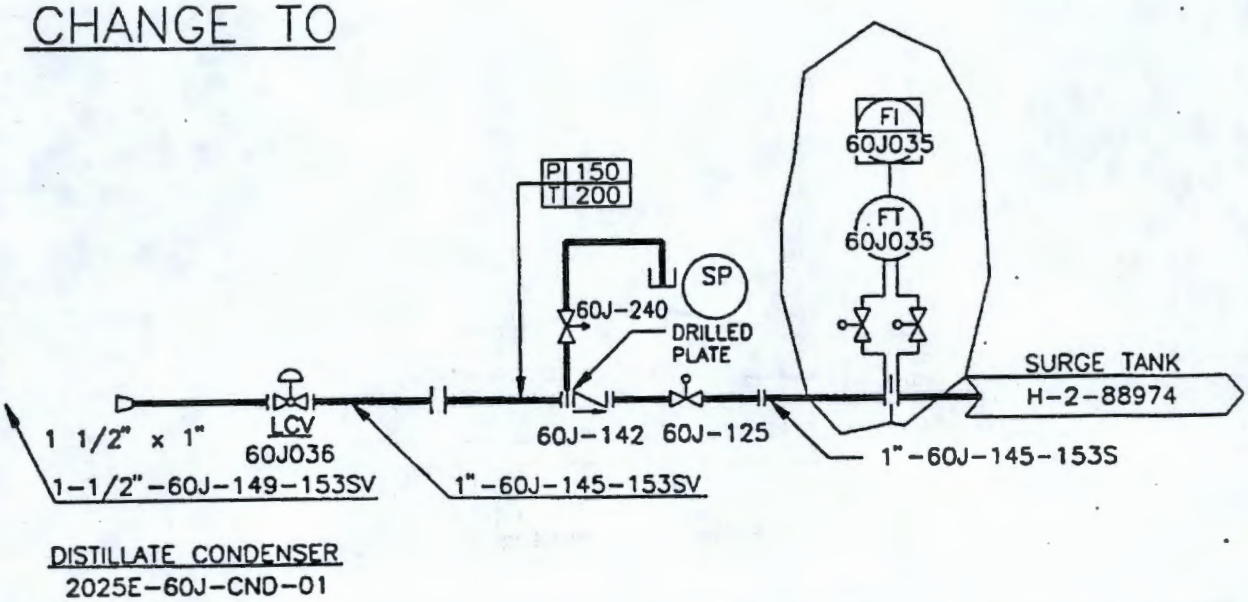

H-2-89364 Sht.2

WAS

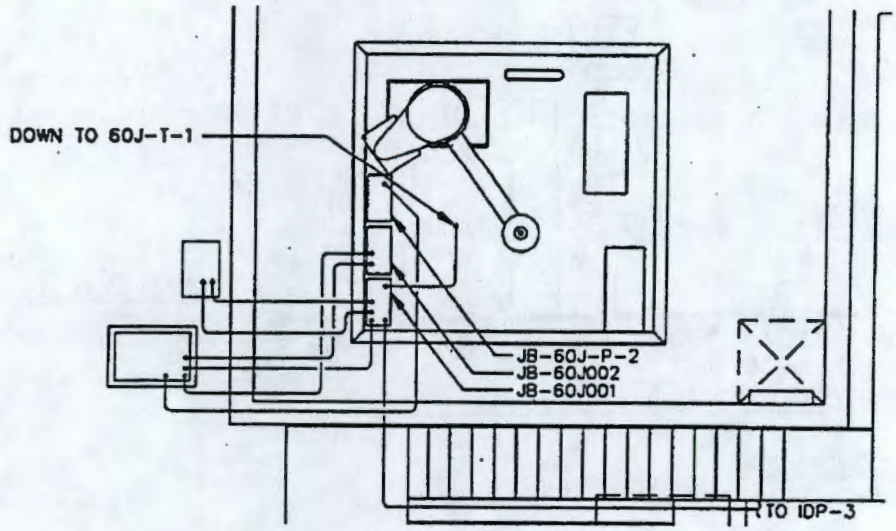

Change To

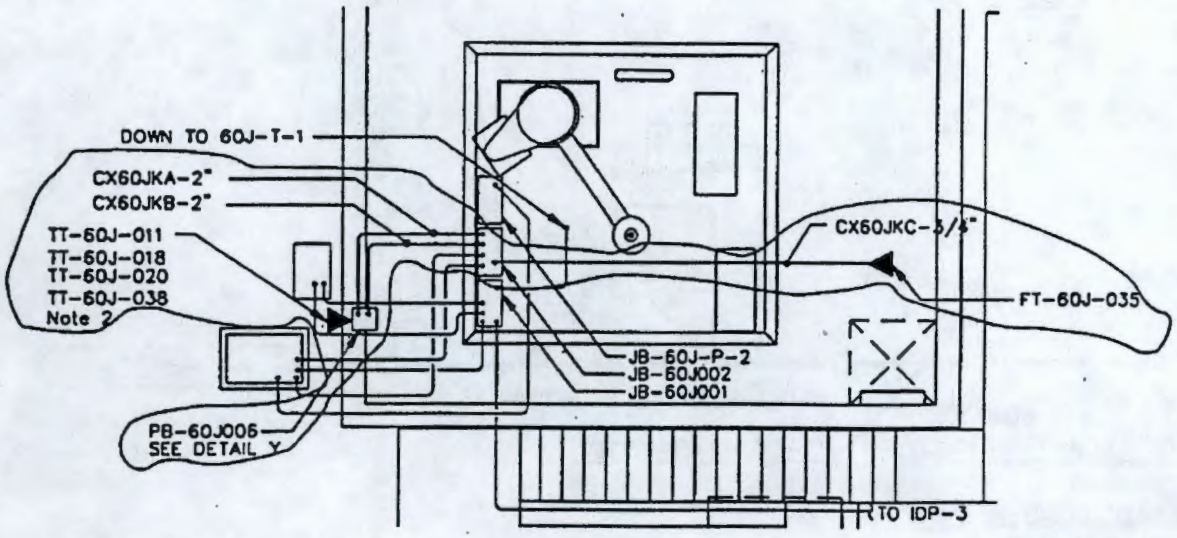

ECN 648765 | Date 08/17/98

ENGINEERING CHANGE NOTICE CONTINUATION SHEET Page 5 of 10

H-2-89364 Sht.2

WAS

NOTE:

FOR PULLBOX CONDUIT DETAILS,
SEE SHEETS 3 & 4 OF THIS DRAWING.

CHANGE TO

NOTE:

1. FOR PULLBOX CONDUIT DETAILS,
   SEE SHEETS 3 & 4 OF THIS DRAWING.
2. TEMPERATURE SENSORS ARE LOCATED INSIDE TFD ROOM.

A-7900-013-4 (04/94) GEF094

H-2-89364 Sht.4

ADD

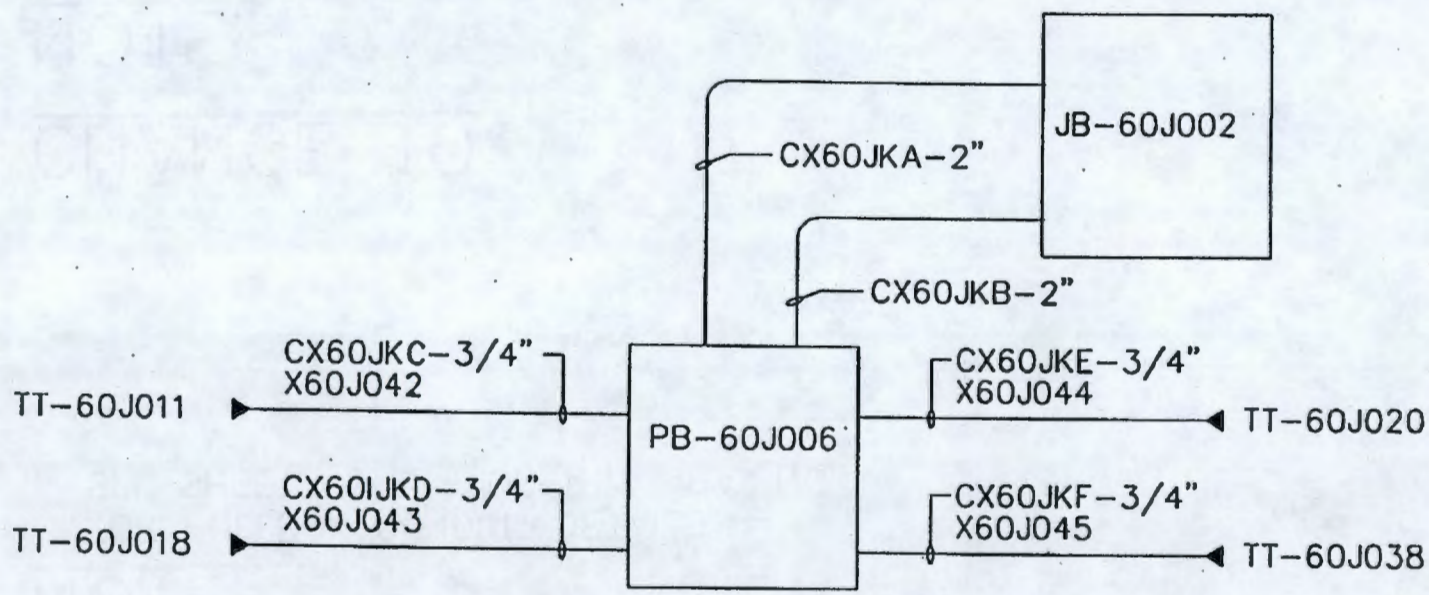

DETAIL Y

N.T.S.

H-2-89364 Sht.1

WAS

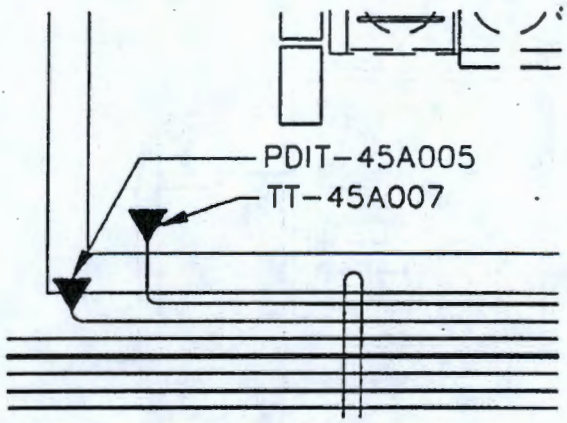

Change To

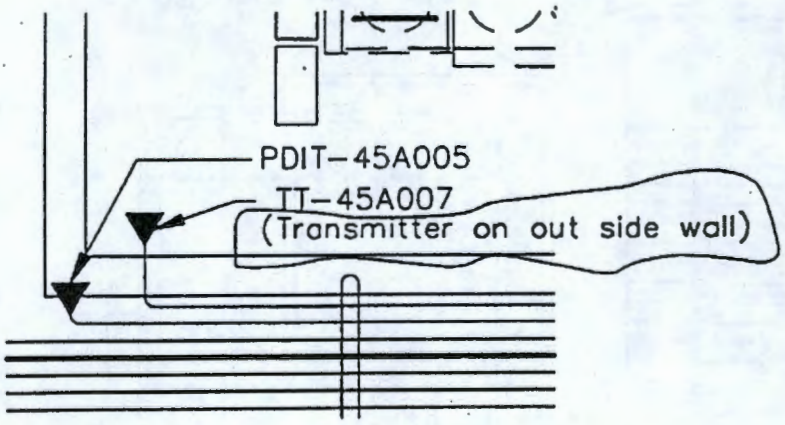

H-2-89319

WAS

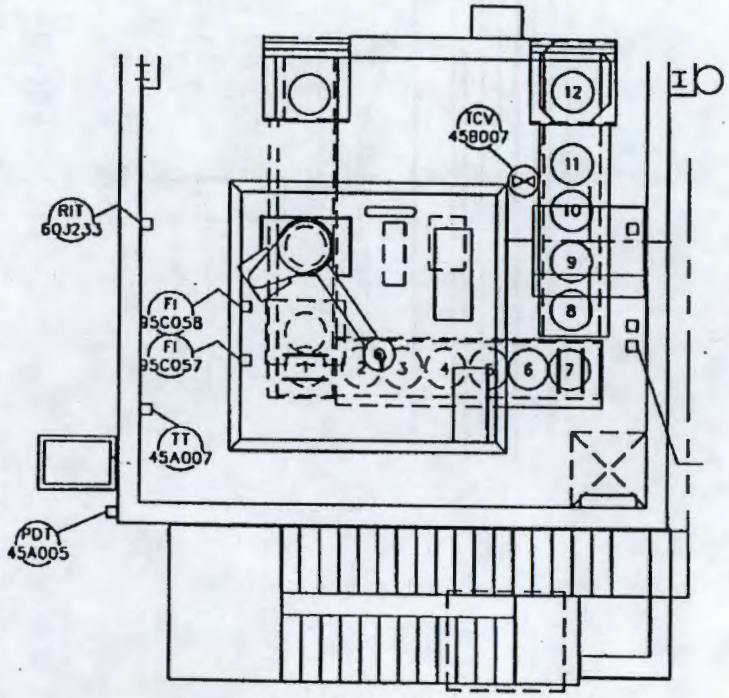

CHANGE TO

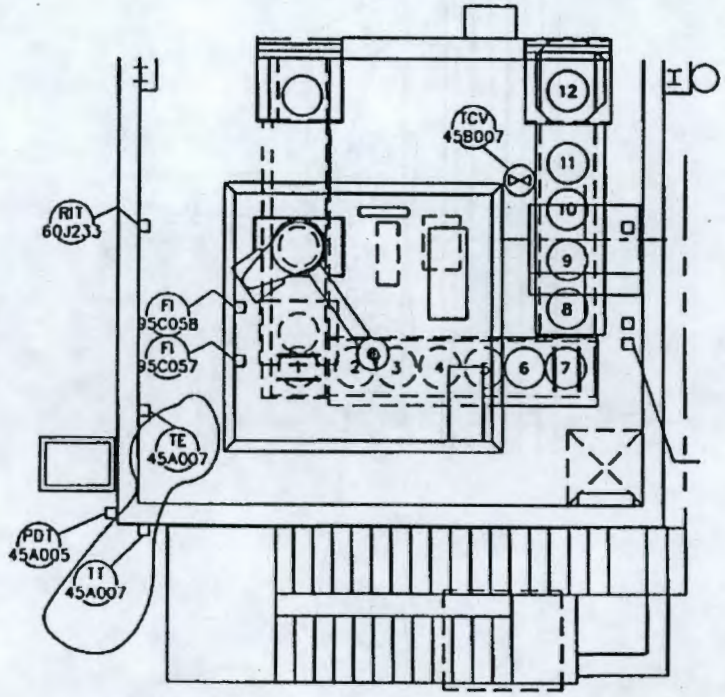

INFORMATION ONLY: Add to the ETF Cable Schedule:

CABLE NO.	CABLE TYPE	FROM	TO	SERVICE	WIRING DIAGRAM	CABLE LENGTH
1.						
X60J042	1TSP18	JB-60J002	TT-60J011	INST		20
RACEWAYS: CX60JKA,CX60JKC						
2.						
X60J043	1TSP18	JB-60J002	TT-60J018	INST		20
RACEWAYS: CX60JKA, CX60JKD						
3.						
X60J044	1TSP18	JB-60J002	TT-60J020	INST		20
RACEWAYS: CX60JKA, CX60JKE						
4.						
X60J045	1TSP18	JB-60J002	TT-60J038	INST		20
RACEWAYS: CX60JKA, CX60JKF						

INFORMATION ONLY: Add to the ETF Raceway Schedule:

RACEWAY NO.	RACEWAY TYPE	FROM	TO	LENGTH (FT)	PERCENT FILL	REMARKS
5.						
CX60JKA	C200R	JB-60J002	PB-60J006	15	20%	
CABLES: X60J042, X60J043, X60J044, X60J045						
6.						
CX60JKB	C200R	JB-60J002	PB-60J006	15	20%	
CABLES: TE-60J011, TE-60J018, TE-60J020, TE-60J038						
7.						
CX60JKC	C075R	PB-60J006	TT-60J011	5	30%	
CABLES: X60J042, TE-60J011						
8.						
CX60JKD	C075R	PB-60J006	TT-60J018	5	30%	
CABLES: X60J043, TE-60J018						

9.

CX60JKE	C075R	PB-60J006	TT-60J020	5	30%	
CABLES: X60J044, TE-60J020						

10.

CX60JKF	C075R	PB-60J006	TT-60J038	5	30%	
CABLES: X60J045, TE-60J038						

S

CPF 18

ENGINEERING CHANGE NOTICE ESSENTIAL

Page 1 of 4

1. ECN 646670

Proj. ECN

2. ECN Category (mark one)	3. Originator's Name, Organization, MSIN, and Telephone No.	4. USQ Required?	5. Date
Supplemental [x] Direct Revision [] Change ECN [] Temporary [] Standby [] Supersedure [] Cancel/Void []	LL Lin, 32230, S6-72, 372-2759	[] Yes [X] No	8/6/98
	6. Project Title/No./Work Order No. Flush Line for Thin Film Dryer Drain/A4055	7. Bldg./Sys./Fac. No. 2025E/60J	8. Approval Designator NA
	9. Document Numbers Changed by this ECN (includes sheet no. and rev.) H-2-88989, sh 1, Rev 12	10. Related ECN No(s).	11. Related PO No. None

12a. Modification Work	12b. Work Package No.	12c. Modification Work Complete	12d. Restored to Original Condition (Temp. or Standby ECN only)
[X] Yes (fill out Blk. 12b) [] No (NA Blks. 12b, 12c, 12d)	EL-98-00537/M	Design Authority/Cog. Engineer Signature & Date	NA Design Authority/Cog. Engineer Signature & Date

13a. Description of Change

13b. Design Baseline Document? [X] Yes [] No

Description of Changes:

Affected document:
H-2-88989, sh 1, Rev 12: P&ID Thin Film Dryer

See pages 3 and 4 of this ECN for change details.

14a. Justification (mark one)

Criteria Change	[]	Design Improvement	[X]	Environmental	[]	Facility Deactivation	[]
As-Found	[]	Facilitate Const	[]	Const. Error/Omission	[]	Design Error/Omission	[]

14b. Justification Details

The drain line off AOV-60J-160 on the Thin Film Dryer is prone to plugging. This modification will route warm distillate water to the drain line for flushing and unplugging.

15. Distribution (include name, MSIN, and no. of copies)

L. L. Lin, S6-72, 1*
N. J. Sullivan, S6-72, 1
D. P. Nelsen, S6-71, 1
D. L. Tubbs, S6-74, 1
M. W. Bowman, S6-72, 1
J. M. Isdell, G3-17, 1 *
WCC, S6-71, 1*
J. E. Geary, S6-71, 1*
D. E. Scully, S6-72, 1*
S. T. Willett, S6-72, 1
D. L. Flyckt, S6-72, 1
C. D. Skogley, S6-72, 1

*Advanced copies

RELEASE STAMP
AUG 13 1998
DATE:
HANFORD RELEASE
STA: 30
ID: 25

A-7900-013-2 (05/96) GEF095

A-7900-013-1

ENGINEERING CHANGE NOTICE	Page 2 of 4	1. ECN (use no. from pg. 1) 646670

16. Design Verification Required	17. Cost Impact						18. Schedule Impact (days)	
	ENGINEERING			CONSTRUCTION				
[X] Yes	Additional	[na]	$	Additional	[na]	$	Improvement	[na]
[] No	Savings	[na]	$	Savings	[na]	$	Delay	[na]

19. Change Impact Review: Indicate the related documents (other than the engineering documents identified on Side 1) that will be affected by the change described in Block 13. Enter the affected document number in Block 20.

SDD/DD	[na]	Seismic/Stress Analysis	[na]	Tank Calibration Manual	[na]
Functional Design Criteria	[na]	Stress/Design Report	[na]	Health Physics Procedure	[na]
Operating Specification	[na]	Interface Control Drawing	[na]	Spares Multiple Unit Listing	[na]
Criticality Specification	[na]	Calibration Procedure	[na]	Test Procedures/Specification	[na]
Conceptual Design Report	[na]	Installation Procedure	[na]	Component Index	[X]
Equipment Spec.	[na]	Maintenance Procedure	[na]	ASME Coded Item	[na]
Const. Spec.	[na]	Engineering Procedure	[na]	Human Factor Consideration	[na]
Procurement Spec.	[na]	Operating Instruction	[na]	Computer Software	[na]
Vendor Information	[na]	Operating Procedure	[X]	Electric Circuit Schedule	[na]
OM Manual	[na]	Operational Safety Requirement	[na]	ICRS Procedure	[na]
FSAR/SAR	[na]	IEFD Drawing	[X]	Process Control Manual/Plan	[na]
Safety Equipment List	[na]	Cell Arrangement Drawing	[na]	Process Flow Chart	[na]
Radiation Work Permit	[na]	Essential Material Specification	[na]	Purchase Requisition	[na]
Environmental Impact Statement	[na]	Fac. Proc. Samp. Schedule	[na]	Tickler File	[na]
Environmental Report	[na]	Inspection Plan	[na]		[]
Environmental Permit	[na]	Inventory Adjustment Request	[na]		[]

20. Other Affected Documents: (NOTE: Documents listed below will not be revised by this ECN.) Signatures below indicate that the signing organization has been notified of other affected documents listed below.

Document Number/Revision	Document Number/Revision	Document Number Revision
POP 60J-001		

21. Approvals

	Signature	Date		Signature	Date
Design Authority	L. L. Lin	8-6-98	Design Agent	L. L. Lin	8-6-98
Cog. Eng.	D. E. Scully	8/6/98	PE		
Cog. Mgr. (Informal Review)	N. J. Sullivan	8-13-98	QA		
QA			Safety		
Safety			Design		
Environ.			Environ.		
Cog. Eng.			Other		

DEPARTMENT OF ENERGY

Signature or a Control Number that tracks the Approval Signature

ADDITIONAL

Installation Instructions (Do not incorporate in drawings)

1. Install flush line for AOV-60J-160 as shown on page 4 of this ECN.

2. Route new 1/2", 304 SS pipe (1/2"-60J-203-153S) from PT-60J007 at 60J-P-3 pump discharge. Connect new pipe to existing pipe 1"-60J-160-153SV.

3. Piping, fittings and jointing methods are to meet the requirements of ETF Piping Specification Class 153S.

4. Install and test the new installation in accordance with ASME B31.3 and Addenda for Category D Fluid Service.

5. Valve 60J-256 shall be 1/2", 304 SS ball valve, part number Worcester 4466TBW, or Engineering approved equal.

6. Valve 60J-257 shall be 1", 304 SS ball valve, part number Worcester 4466TBW, or Engineering approved equal.

7. Field route piping as required to avoid low-spot accumulation. Valves shall be installed to allow ease of operator access. Support valves and piping as necessary.

8. Resolve any installation problems with PIC or cognizant engineer.

ECN No.	Page	
646670	4 of 4	
Ref. Dwg. H-2-88989	Sh. 1	Rev. 12
Prep. By Lilly L Lin		

ZONE C-5

ZONE C-4

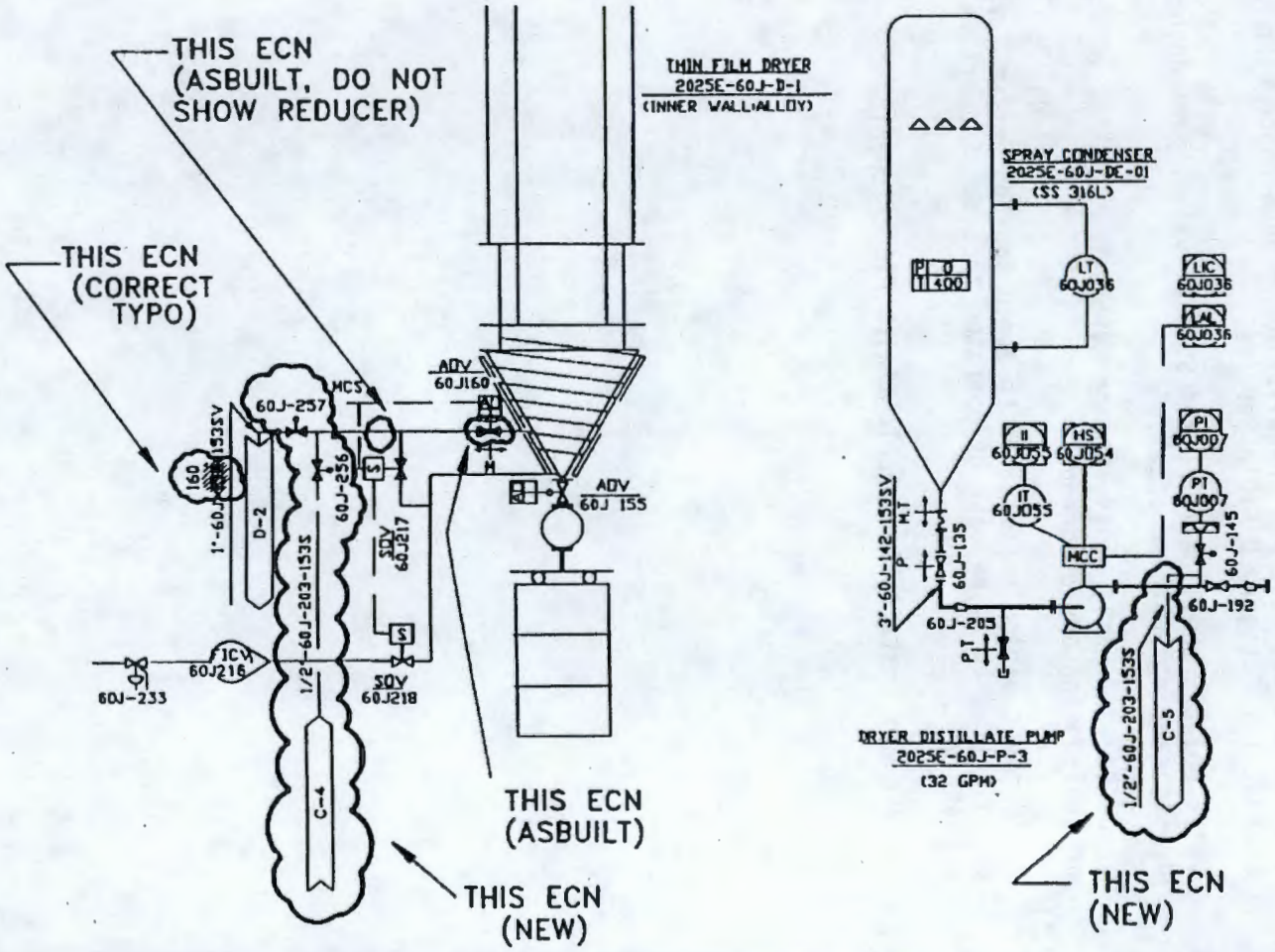

ENGINEERING CHANGE NOTICE CONTINUATION SHEET

Page 4 of 4

ECN 646670

Date 8/6/98

A-7900-013-3 (05/96) GEF096

S

CPF 18

ENGINEERING CHANGE NOTICE ESSENTIAL

1. ECN 646672

Proj. ECN

2. ECN Category (mark one)	3. Originator's Name, Organization, MSIN, and Telephone No.	4. USQ Required?	5. Date
Supplemental [] Direct Revision [] Change ECN [x] Temporary [] Standby [] Supersedure [] Cancel/Void []	LL Lin, 32230, S6-72, 372-2759	[] Yes [X] No	8/28/98
	6. Project Title/No./Work Order No. Change ECN, Flush Line for Thin Film Dryer Drain/A4055	7. Bldg./Sys./Fac. No. 2025E/60J	8. Approval Designator NA
	9. Document Numbers Changed by this ECN (includes sheet no. and rev.) H-2-88989, sh 1, Rev 1~~2~~ 3	10. Related ECN No(s). ECN 646670	11. Related PO No. None

12a. Modification Work	12b. Work Package No.	12c. Modification Work Complete	12d. Restored to Original Condition (Temp. or Standby ECN only)
[X] Yes (fill out Blk. 12b) [] No (NA Blks. 12b, 12c, 12d)	EL-98-00537/M	Design Authority/Cog. Engineer Signature & Date	NA Design Authority/Cog. Engineer Signature & Date

13a. Description of Change

13b. Design Baseline Document? [X] Yes [] No

Description of Changes:

Affected document:
H-2-88989, sh 1, Rev 1~~2~~ 3: P&ID Thin Film Dryer
ECN 646670

On page 3 of ECN 646670, change step 3 to read:

Piping installation is to meet the requirements of ETF Piping Specification Class 153S, except that 3000 lb socket welded fittings per ASTM spec A182-F304 may be used.

14a. Justification (mark one)

Criteria Change	[]	Design Improvement	[]	Environmental	[]	Facility Deactivation	[]
As-Found	[]	Facilitate Const	[X]	Const. Error/Omission	[]	Design Error/Omission	[]

14b. Justification Details

The change is necessary to facilitate the contruction.

15. Distribution (include name, MSIN, and no. of copies)

L. L. Lin, S6-72, 1*
N. J. Sullivan, S6-72, 1
D. P. Nelsen, S6-71, 1
D. L. Tubbs, S6-74, 1
M. W. Bowman, S6-72, 1
J. M. Isdell, G3-17, 1
WCC, S6-71, 1*
J. E. Geary, S6-71, 1
D. E. Scully, S6-72, 1*
S. T. Willett, S6-72, 1
D. L. Flyckt, S6-72, 1
C. D. Skogley, S6-72, 1

*Advanced copies

RELEASE STAMP
AUG 28 1998
DATE:
HANFORD RELEASE
STA: 30
ID: 25

A-7900-013-2 (05/96) GEF095

A-7900-013-1

ENGINEERING CHANGE NOTICE	Page 2 of 2	1. ECN (use no. from pg. 1) 646672

16. Design Verification Required	17. Cost Impact						18. Schedule Impact (days)	
	ENGINEERING			CONSTRUCTION				
[X] Yes	Additional	[na]	$	Additional	[na]	$	Improvement	[na]
[] No	Savings	[na]	$	Savings	[na]	$	Delay	[na]

19. Change Impact Review: Indicate the related documents (other than the engineering documents identified on Side 1) that will be affected by the change described in Block 13. Enter the affected document number in Block 20.

SDD/DD	[na]	Seismic/Stress Analysis	[na]	Tank Calibration Manual	[na]
Functional Design Criteria	[na]	Stress/Design Report	[na]	Health Physics Procedure	[na]
Operating Specification	[na]	Interface Control Drawing	[na]	Spares Multiple Unit Listing	[na]
Criticality Specification	[na]	Calibration Procedure	[na]	Test Procedures/Specification	[na]
Conceptual Design Report	[na]	Installation Procedure	[na]	Component Index	[na]
Equipment Spec.	[na]	Maintenance Procedure	[na]	ASME Coded Item	[na]
Const. Spec.	[na]	Engineering Procedure	[na]	Human Factor Consideration	[na]
Procurement Spec.	[na]	Operating Instruction	[na]	Computer Software	[na]
Vendor Information	[na]	Operating Procedure	[na]	Electric Circuit Schedule	[na]
OM Manual	[na]	Operational Safety Requirement	[na]	ICRS Procedure	[na]
FSAR/SAR	[na]	IEFD Drawing	[na]	Process Control Manual/Plan	[na]
Safety Equipment List	[na]	Cell Arrangement Drawing	[na]	Process Flow Chart	[na]
Radiation Work Permit	[na]	Essential Material Specification	[na]	Purchase Requisition	[na]
Environmental Impact Statement	[na]	Fac. Proc. Samp. Schedule	[na]	Tickler File	[na]
Environmental Report	[na]	Inspection Plan	[na]		[]
Environmental Permit	[na]	Inventory Adjustment Request	[na]		[]

20. Other Affected Documents: (NOTE: Documents listed below will not be revised by this ECN.) Signatures below indicate that the signing organization has been notified of other affected documents listed below.

Document Number/Revision	Document Number/Revision	Document Number Revision

21. Approvals

	Signature	Date		Signature	Date
Design Authority	L. L. Lin	8/28/98	Design Agent	L. L. Lin	8/28/98
Cog. Eng.	D. E. Scully for DES	8-28-98	PE		
Cog. Mgr. (Informal Review)	N. J. Sullivan	8-28-98	QA		
QA			Safety		
Safety			Design		
Environ.			Environ.		
Cog. Eng.			Other		

DEPARTMENT OF ENERGY

Signature or a Control Number that tracks the Approval Signature

ADDITIONAL

ESSENTIAL

CPF18

ENGINEERING CHANGE NOTICE

1. ECN 642797

Proj. ECN

2. ECN Category (mark one)	3. Originator's Name, Organization, MSIN, and Telephone No.	4. USQ Required?	5. Date
Supplemental [X] Direct Revision [] Change ECN [] Temporary [] Standby [] Supersedure [] Cancel/Void []	DE SCULLY/32230/S6-72/373-3592	[] Yes [X] No	01/27/99
	6. Project Title/No./Work Order No. INSTALL ISOLATION VALVES ON 5 DRYER SKID PRESSURE INDICATORS/TRANSMITTERS	7. Bldg./Sys./Fac. No. 2025E/60J	8. Approval Designator NA
	9. Document Numbers Changed by this ECN (includes sheet no. and rev.) 13 nw 2/4/99 H-2-88989, REV 6, Sht 1	10. Related ECN No(s). NONE	11. Related PO No. NONE

12a. Modification Work	12b. Work Package No.	12c. Modification Work Complete	12d. Restored to Original Condition (Temp. or Standby ECN only)
[X] Yes (fill out Blk. 12b) [] No (NA Blks. 12b, 12c, 12d)	EL-98-00865/W	Design Authority/Cog. Engineer Signature & Date	Design Authority/Cog. Engineer Signature & Date

13a. Description of Change

13b. Design Baseline Document? [X] Yes [] No

Install screwed carbon steel isolation gate valves just below the isolation diaphragms for the 4 steam pressure indicators/transmitter [PI(T)-60J-201, -202, -004, -032] as shown on p. 3 of this ECN .

Install a screwed 316 stainless steel isolation ball valve just below the isolation diaphragm for the brine pressure transmitter PT-60J-005 as shown on p. 3 of this ECN.

Install, inspect, and test the new piping installation in accordance with ASME B31.3 and addenda for ~~normal fluid service for valve 60J-262, and~~ category D fluid service. ~~for the remaining valves.~~ 1098 1/27/99

Review and approval by the OSE lead will constitute design review.

14a. Justification (mark one)

Criteria Change	[]	Design Improvement	[X]	Environmental	[]	Facility Deactivation	[]
As-Found	[]	Facilitate Const	[]	Const. Error/Omission	[]	Design Error/Omission	[]

14b. Justification Details

These isolation valves will allow the pressure indicators/transmitters to be calibrated in place.

15. Distribution (include name, MSIN, and no. of copies)

DK Smith	S6-72	1	DE Scully	S6-72	1*
NJ Sullivan	S6-72	1	WCC Planning	S6-71	1*
MW Bowman	S6-72	1			
CD Skogley	S6-71	1	JL Vigue	S6-72	1

RELEASE STAMP

DATE HANFORD RELEASE

STA: 4

ID: 58

FEB 4 1999

A-7900-013-2 (05/96) GEF095

A-7900-013-1

ENGINEERING CHANGE NOTICE	Page 2 of 3	1. ECN (use no. from pg. 1) 647297

16. Design Verification Required	17. Cost Impact				18. Schedule Impact (days)	
	ENGINEERING		CONSTRUCTION			
[X] Yes	Additional	[] $	Additional	[] $	Improvement	[]
[] No	Savings	[] $	Savings	[] $	Delay	[]

19. Change Impact Review: Indicate the related documents (other than the engineering documents identified on Side 1) that will be affected by the change described in Block 13. Enter the affected document number in Block 20.

SDD/CD	[]	Seismic/Stress Analysis	[]	Tank Calibration Manual	[]
Functional Design Criteria	[]	Stress/Design Report	[]	Health Physics Procedure	[]
Operating Specification	[]	Interface Control Drawing	[]	Spares Multiple Unit Listing	[]
Criticality Specification	[]	Calibration Procedure	[]	Test Procedures/Specification	[]
Conceptual Design Report	[]	Installation Procedure	[]	Component Index	[X]
Equipment Spec.	[]	Maintenance Procedure	[]	ASME Coded Item	[]
Const. Spec.	[]	Engineering Procedure	[]	Human Factor Consideration	[]
Procurement Spec.	[]	Operating Instruction	[]	Computer Software	[]
Vendor Information	[]	Operating Procedure	[X]	Electric Circuit Schedule	[]
OM Manual	[]	Operational Safety Requirement	[]	ICRS Procedure	[]
FSAR/SAR	[]	IEFD Drawing	[]	Process Control Manual/Plan	[]
Safety Equipment List	[]	Cell Arrangement Drawing	[]	Process Flow Chart	[]
Radiation Work Permit	[]	Essential Material Specification	[]	Purchase Requisition	[]
Environmental Impact Statement	[]	Fac. Proc. Samp. Schedule	[]	Tickler File	[]
Environmental Report	[]	Inspection Plan	[]		[]
Environmental Permit	[]	Inventory Adjustment Request	[]		[]

20. Other Affected Documents: (NOTE: Documents listed below will not be revised by this ECN.) Signatures below indicate that the signing organization has been notified of other affected documents listed below.

Document Number/Revision	Document Number/Revision	Document Number Revision
POP-60J-001/P-6		

21. Approvals

	Signature	Date		Signature	Date
Design Authority DE Scully	DE Scully	1/27/99	Design Agent DE Scully	DE Scully	1/27/99
Cog. Eng. DE Scully	DE Scully	1/27/99	PE		
Cog. Mgr. NL Sullivan for RJ Nicklas	NL Sullivan	1-27-99	QA		
QA			Safety		
Safety			Design		
Environ.			Environ.		
Other			Other		
Systems Lead					

Notes:
1) The Systems Lead will provide design verification.

DEPARTMENT OF ENERGY

ADDITIONAL

A-7900-013-3 (05/96) GEF096

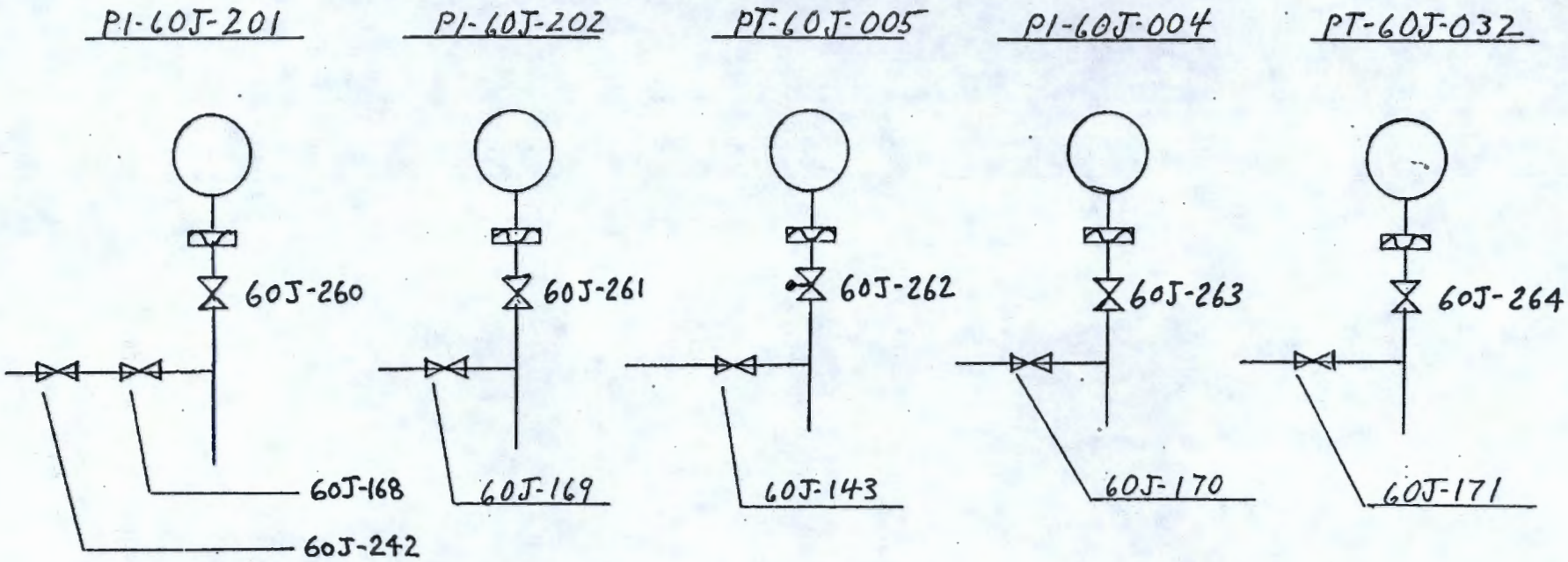

The above valves 60J-260, -261, -262, -263, and -264 are to be incorporated schematically on the P+ID, H-2-88989, rev. ~~6~~. 13.

ECN 642797
p. 3/3

ENGINEERING CHANGE NOTICE

1. ECN ~~614443~~

Prel. ECN W-291H-~~0~~15 DSM/SJG 9/27/94

FILE COPY 10

2. ECN Category (mark one)	3. Originator's Name, Organization, MSIN, and Telephone No.		4. Date
Supplemental [X] Direct Revision [ ] Change ECN [ ] Temporary [ ] Standby [ ] Supersedure [ ] Cancel/Void [ ]	Joe Murphy, ICF KH, ER & SW, G3-17, 373-0867		9-19-94
	5. Project Title/No./Work Order No. W-291H 200 AREA BAT/AKART IMPLEMENTATION	6. Bldg./Sys./Fac. No. ETF TRUCK LOAD IN FACILITY	7. Approval Designator N/A
	8. Document Numbers Changed by this ECN (includes sheet no. and rev.) H-2-817969 SHT 1,2,3,4,5 REV 0 H-2-817975 SHT 1 Construction Spec. W-291H-C2 DSM/SJG 9/27/94	9. Related ECN No(s). W291H-~~0~~10 DSM/SJG 9/27/94	10. Related PO No. N/A/SC/3

11a. Modification Work	11b. Work Package No.	11c. Modification Work Complete	11d. Restored to Original Condition (Temp. or Standby ECN only)
[] Yes (fill out Blk. 11b) [] No (NA Blks. 11b, 11c, 11d) unknown	UNKNOWN	N/A Cog. Engineer Signature & Date	N/A Cog. Engineer Signature & Date

12. Description of Change SC/3

ITEM 1: DWG H-2-817969 SHT 1

a. ZONE C-4; Change alignment of line and add line as shown in sketch on page 5.

ITEM 2: DWG H-2-817969 SHT 2

a. Zone DE-3,4; Change alignment of line L-1 and add 4" line as shown in sketch on page 6.

b. Zone AB-7; Change and add line to profile as shown in sketch on page 7.

c. Zone D-7; Change notes as shown in sketch on page 8.

d. Zone B-6; Change detail as shown in sketch on page 8. Related ECN: W291H-~~0~~10 DSM/SJG 9/27/94

e. Zone B-1; Change note 3 to read as follows:

3. The 4" PVC pipe for line L-1 shall be IAW pipe code A or B of section 02650 of the spec.

SEE CONTINUATION SHEET PAGE 3.

13a. Justification (mark one)							
		Criteria Change	[]	Design Improvement	[X]	Environmental	[]
As-Found	[X]	Facilitate Const.	[X]	Const. Error/Omission	[]	Design Error/Omission	[X]

13b. Justification Details

See Continuation Sheet Page 4.

14. Distribution (include name, MSIN, and no. of copies)

ICF KH DISTRIBUTION			
Const Doc Cntl	S2-53	J. D. Fulcher	S2-32
		O. M. Jaka	R3-08
		E. A. McNarma	K6-90
WHC DISTRIBUTION		K. S. Pedersen (COG)	R3-35
Project Files	R1-28	J. H. Rasmussen	T6-20
M. C. Arntzen Jr.	L4-93	B. T. Tabayoyon	R3-35
J. K. Epperley	R1-29	R. L. Veilleux	T3-28

RELEASE STAMP

OFFICIAL RELEASE BY WHC (5)

DATE SEP 27 1994

Sta. 4

A-7900-013-2 (06/94) GEF095

A-7900-013-1 (04/94)

ENGINEERING CHANGE NOTICE

1. ECN (use no. from pg. 1) W291H-Ø715 DSM/Ga 9/27/94

15. Design Verification Required	16. Cost Impact						17. Schedule Impact (days)	
	ENGINEERING			CONSTRUCTION				
[] Yes	Additional	[]	$ Ø	Additional	[]	$ 5K	Improvement	[] N/A
[] No	Savings	[]	$	Savings	[]	$	Delay	[]

18. Change Impact Review: Indicate the related documents (other than the engineering documents identified on Side 1) that will be affected by the change described in Block 12. Enter the affected document number in Block 19.

SDD/DD	[]	Seismic/Stress Analysis	[]	Tank Calibration Manual	[]
Functional Design Criteria	[]	Stress/Design Report	[]	Health Physics Procedure	[]
Operating Specification	[]	Interface Control Drawing	[]	Spares Multiple Unit Listing	[]
Criticality Specification	[]	Calibration Procedure	[]	Test Procedures/Specification	[]
Conceptual Design Report	[]	Installation Procedure	[]	Component Index	[]
Equipment Spec.	[]	Maintenance Procedure	[]	ASME Coded Item	[]
Const. Spec.	[]	Engineering Procedure	[]	Human Factor Consideration	[]
Procurement Spec.	[]	Operating Instruction	[]	Computer Software	[]
Vendor Information	[]	Operating Procedure	[]	Electric Circuit Schedule	[]
OM Manual	[]	Operational Safety Requirement	[]	ICRS Procedure	[]
FSAR/SAR	[]	IEFD Drawing	[]	Process Control Manual/Plan	[]
Safety Equipment List	[]	Cell Arrangement Drawing	[]	Process Flow Chart	[]
Radiation Work Permit	[]	Essential Material Specification	[]	Purchase Requisition	[]
Environmental Impact Statement	[]	Fac. Proc. Samp. Schedule	[]	Tickler File	[]
Environmental Report	[]	Inspection Plan	[]		[]
Environmental Permit	[]	Inventory Adjustment Request	[]		[]

19. Other Affected Documents: (NOTE: Documents listed below will not be revised by this ECN.) Signatures below indicate that the signing organization has been notified of other affected documents listed below.

Document Number/Revision	Document Number/Revision	Document Number Revision

20. Approvals

Signature	Date	Signature	Date
OPERATIONS AND ENGINEERING		ARCHITECT-ENGINEER	
Cog. Eng. [signature]	9/26/94	PE [signature]	9-23-94
Cog. Mgr. [signature]	9/26/94	QA N/A DSM	9-22-94
QA		Safety N/A DSM	9-22-94
Safety		Design [signature]	9-22-94
Environ.		Environ. N/A DSM	9-22-94
Other		Other	
		DEPARTMENT OF ENERGY	
		Signature or a Control Number that tracks the Approval Signature	
		ADDITIONAL	

12. DESCRIPTION OF CHANGE CONT.

ITEM 3: DWG H-2-817969 SHT 3
a. Zone B-6,7; Remove gate and change notes as shown in sketch on page 9.

ITEM 4: DWG H-2-817969 SHT 4
a. Zone DEF-1,2,3,4; Remove TYP FENCE DETAIL and associated NOTES.

ITEM 5: DWG H-2-817969 SHT 5
a. Zone C-6; Add conduit to detail as shown in sketch on page 10.

ITEM 6: DWG H-2-817975 SHT 1
a. Zone C-1; Change note 6 to read as follows:

6. Pumps shall be supplied by ICF KH and installed by the Contractor IAW manufacturer's recommendations.

ITEM 7: CONSTRUCTION SPECIFICATION W-291H-C2, SECTION 02831
a. Delete Section 02831, Chain Link Fences and Gates.

ITEM 8: CONSTRUCTION SPECIFICATION W-291H-C2, SECTION 02831

a. Pipe Code A: Delete, FLEXIBLE COUPLINGS: COMPRESSION TYPE SLIP ON STEEL; DRESSER TYPE 38 OR 138.

b. Pipe Code C: Add, FLEXIBLE COUPLINGS: COMPRESSION TYPE SLIP ON STEEL; DRESSER TYPE 38 OR 138.

DAVID STEPHEN McSHANE
STATE OF WASHINGTON
0027710
REGISTERED
PROFESSIONAL ENGINEER
9-22-94

EXPIRES [illegible]

13b. JUSTIFICATION DETAILS

ITEM 1:
a. AF, Sanitary Water line must be moved to avoid leak detection risers installed by project C-018. 4" lined installed by project C-018 is added.

ITEM 2:
a. AF, Same as Item 1a.
b. AF, 4" line installed by C-018 crosses line L-2 and is added to profile.
c. DI, Redundancy in note is removed.
d. FC, Pipe material as called out on the drawing made fabrication of pipe expensive and time consuming.

ITEM 3:
a. AF, Fence is no longer necessary, therefore installation of a gate is not needed.

ITEM 4:
a. AF, Fence is no longer necessary, therefore the installation of a gate is not needed.

ITEM 5.
a. DE/O, Conduit penetration was left off of detail.

ITEM 6:
a. DI, Pump installation note is made more clear.

ITEM 7:
a. AF, Same as Item 3a and 4a.

ITEM 8:
a. FC; Because of Item 2d, Compression Coupling is no longer needed in Pipe Code A and is needed in Pipe Code C.

KAISER ENGINEERS HANFORD	ENGINEERING CHANGE NOTICE SKETCH				
Ref. Dwg. H-2-817969	Sh. 1	Rev. 0	Prepared By RC CROSKREY	Checked By	ECN No. W-291H-15

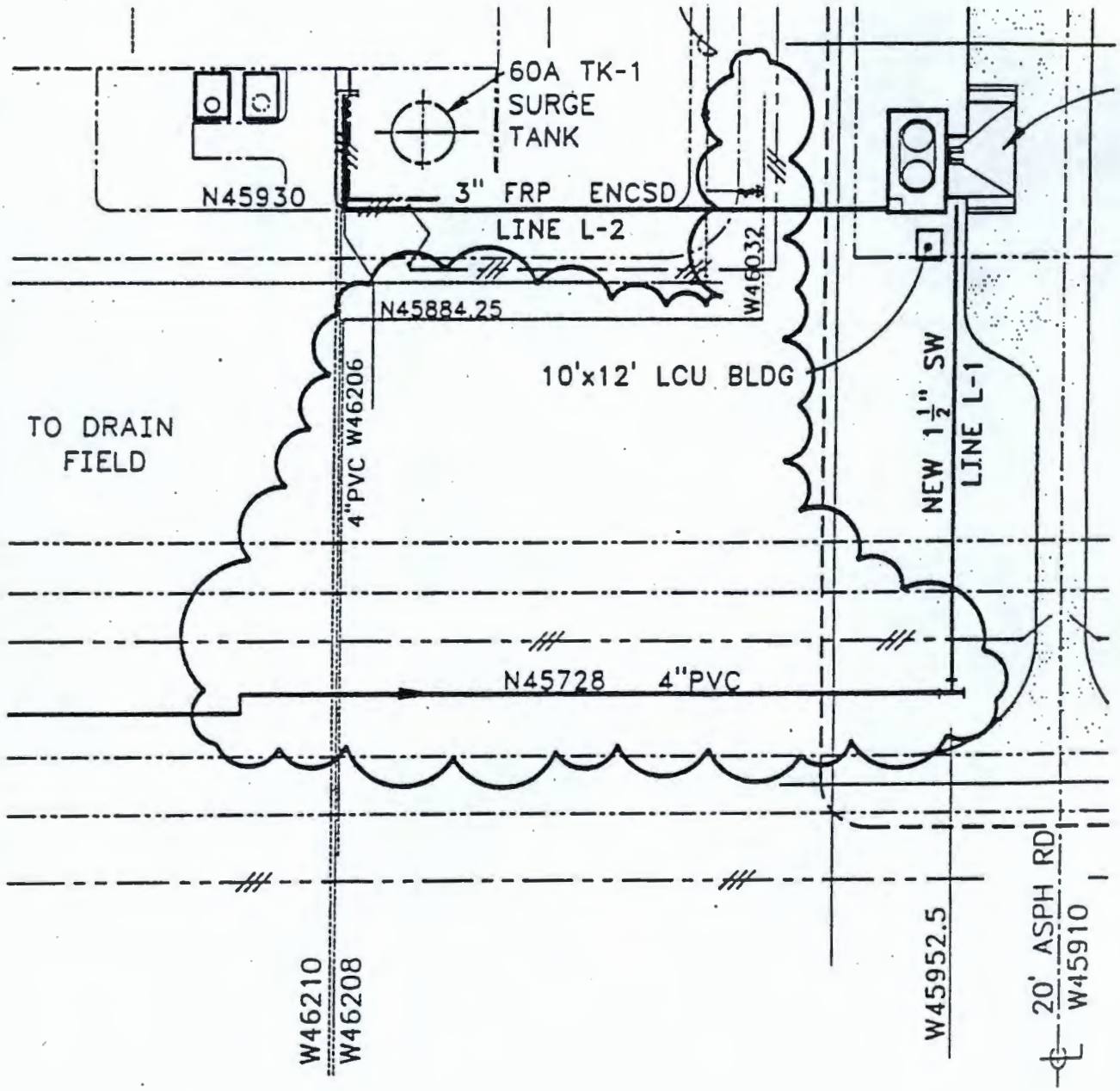

KEH-C159.00 (1/88)

KAISER ENGINEERS HANFORD	ENGINEERING CHANGE NOTICE SKETCH					
Ref. Dwg.	Sh.	Rev.	Prepared By	Checked By	ECN No.	Page
H-2-817969	2	0	RC CROSKREY		W-291H-15	6

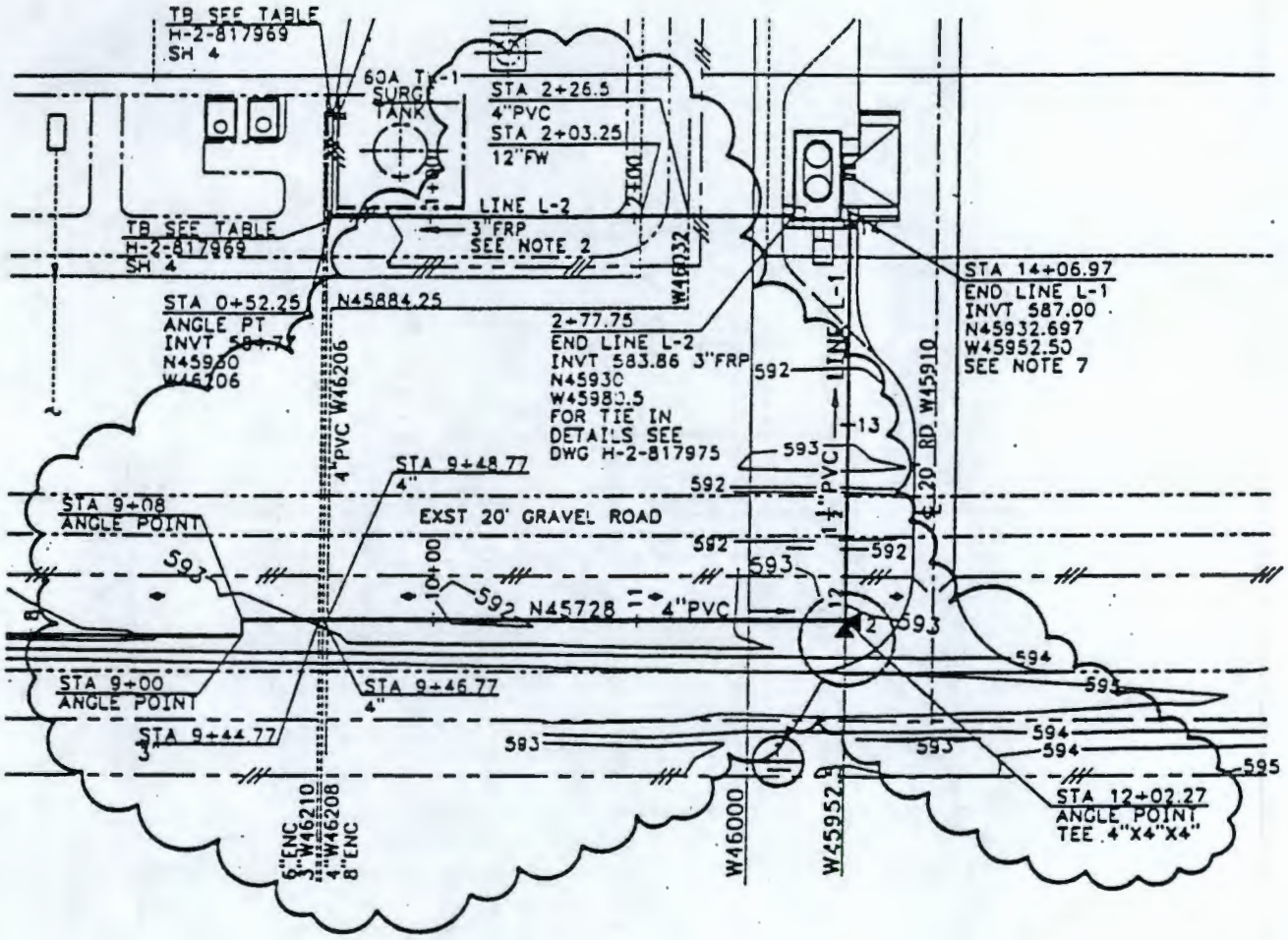

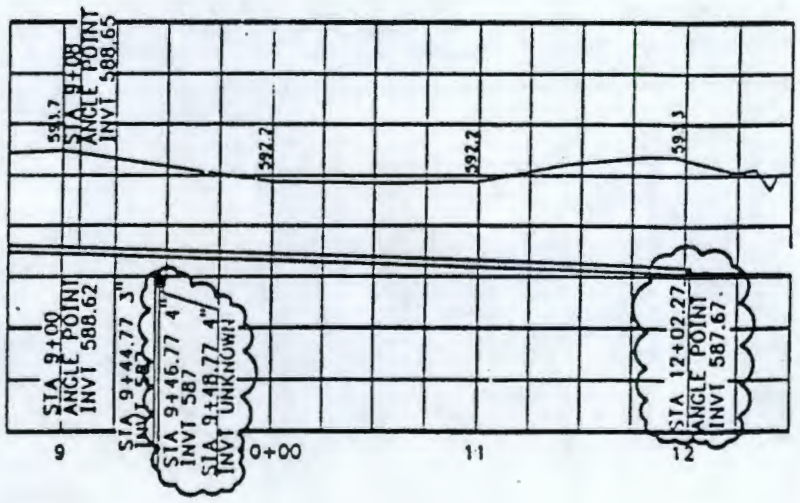

KAISER ENGINEERS HANFORD	ENGINEERING CHANGE NOTICE SKETCH					
Ref. Dwg.	Sh.	Rev.	Prepared By	Checked By	ECN No.	Page
H-2-817969	2	0	RC CROSKREY		W-291H-15	7/10

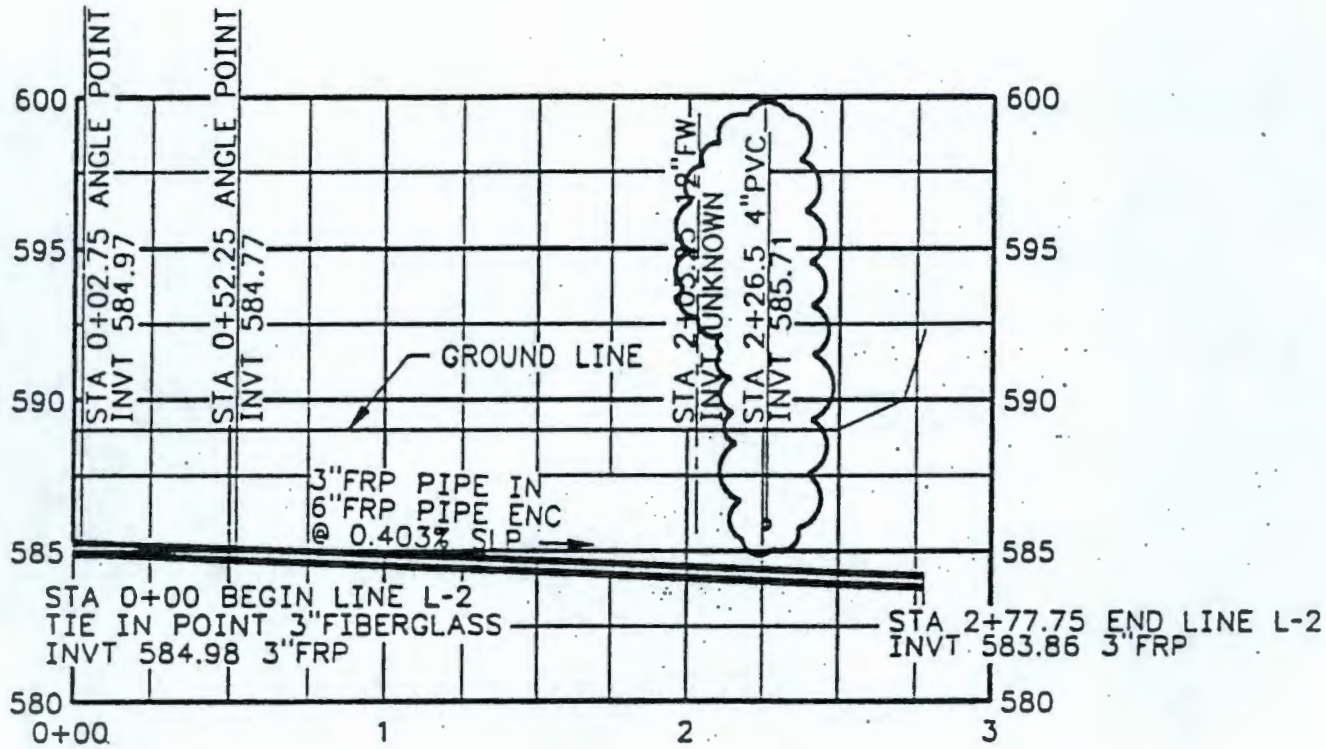

PROFILE LINE L-2

SCALE VERTICAL 1"=5'
HORIZONTAL 1"=50'

KAISER ENGINEERS HANFORD	ENGINEERING CHANGE NOTICE SKETCH					
Ref. Dwg.	Sh.	Rev.	Prepared By	Checked By	ECN No.	Page
H-2-817969	2	0	RC CROSKREY		W-291H-15	8/10

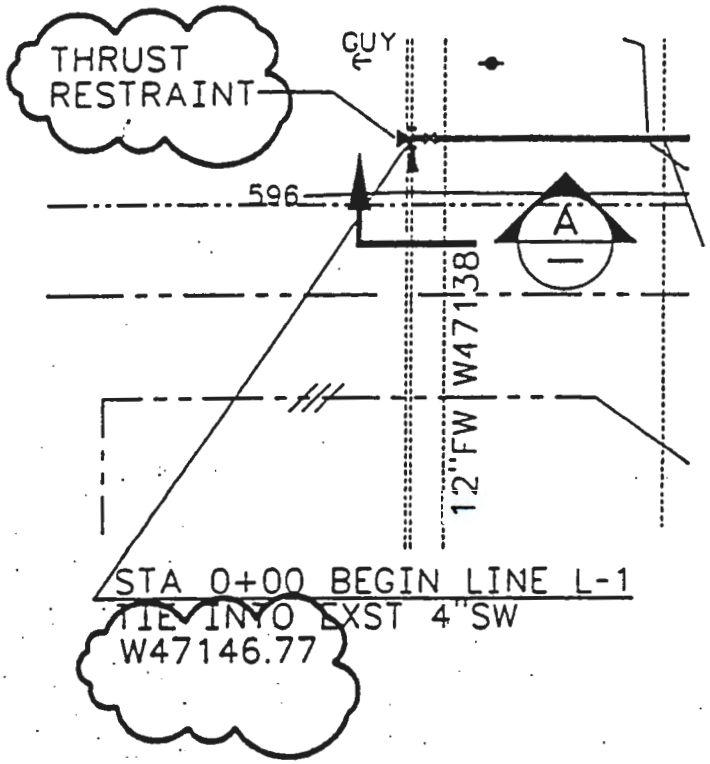

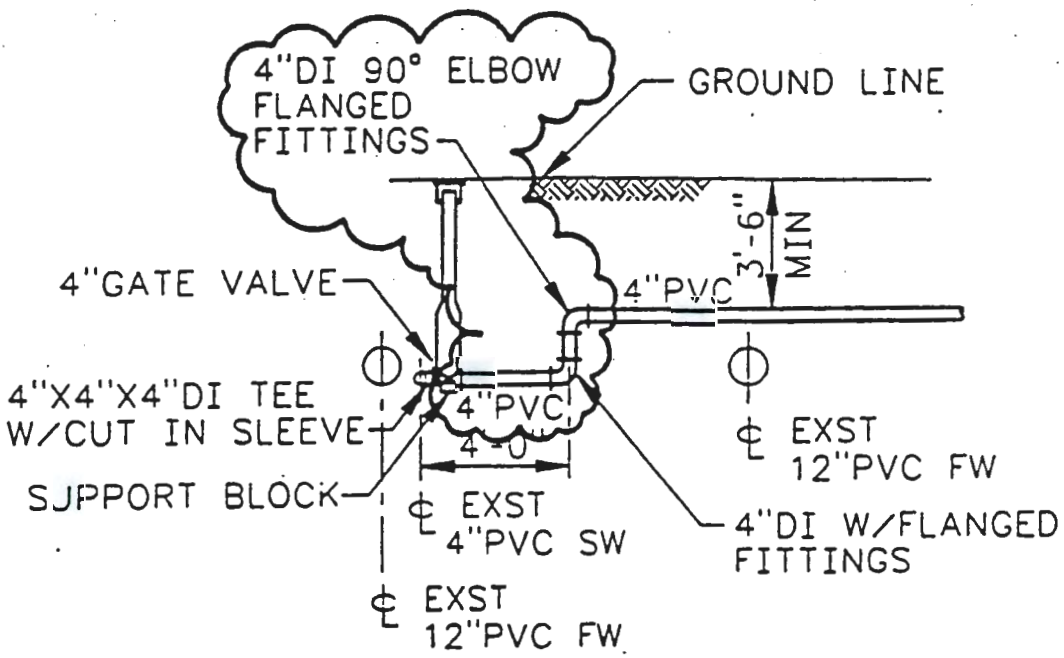

SECTION A

SCALE NONE

KAISER ENGINEERS HANFORD	ENGINEERING CHANGE NOTICE SKETCH					
Ref. Dwg.	Sh.	Rev.	Prepared By	Checked By	ECN No.	Page
H-2-817969	3	0	RC CROSKREY		W-291H-15	9/10

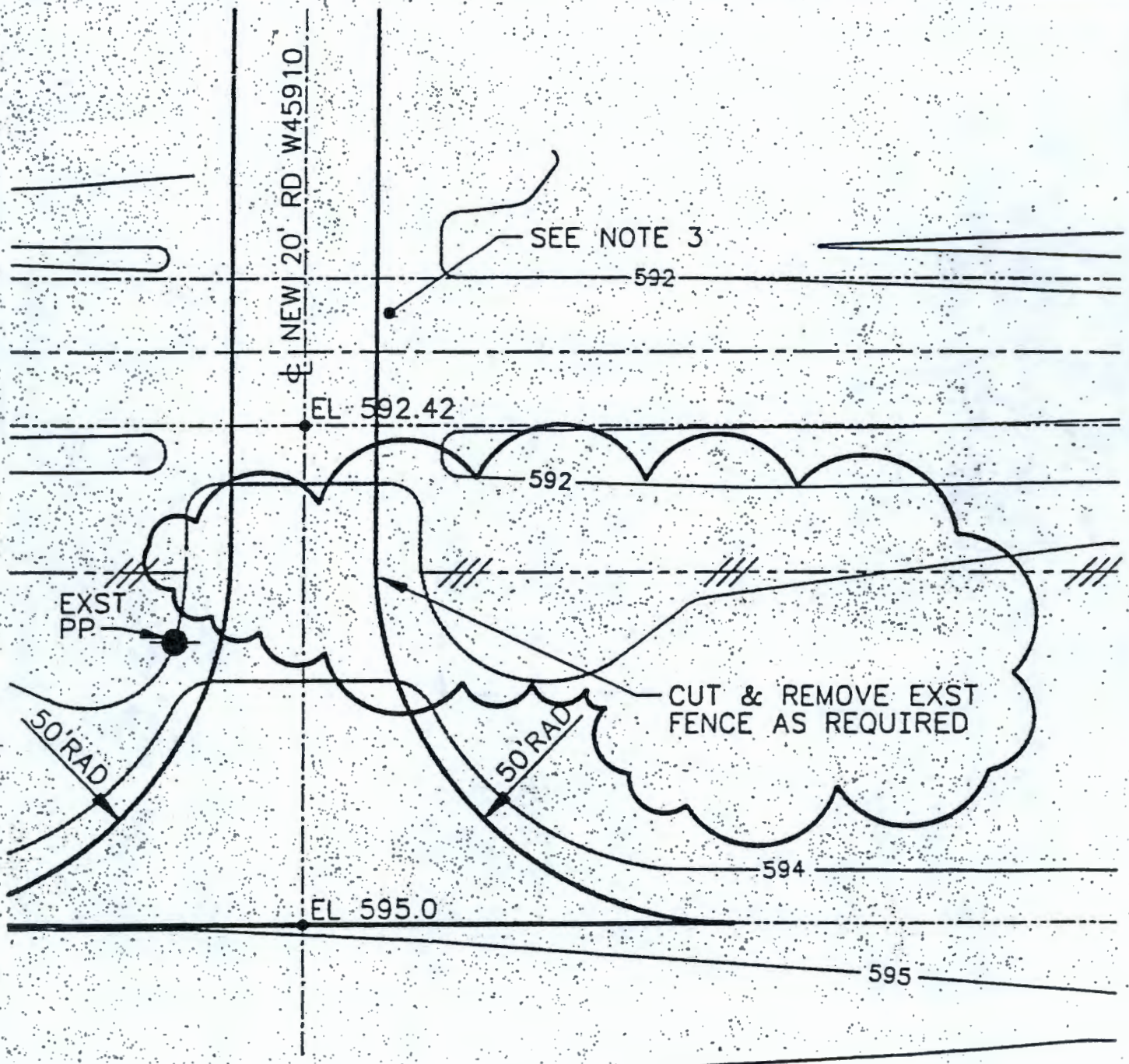

KAISER ENGINEERS HANFORD	ENGINEERING CHANGE NOTICE SKETCH					
Ref. Dwg. H-2-817969	Sh. 5	Rev. 0	Prepared By RC CROSKREY	Checked By	ECN No. W-291H-15	Page 10/10

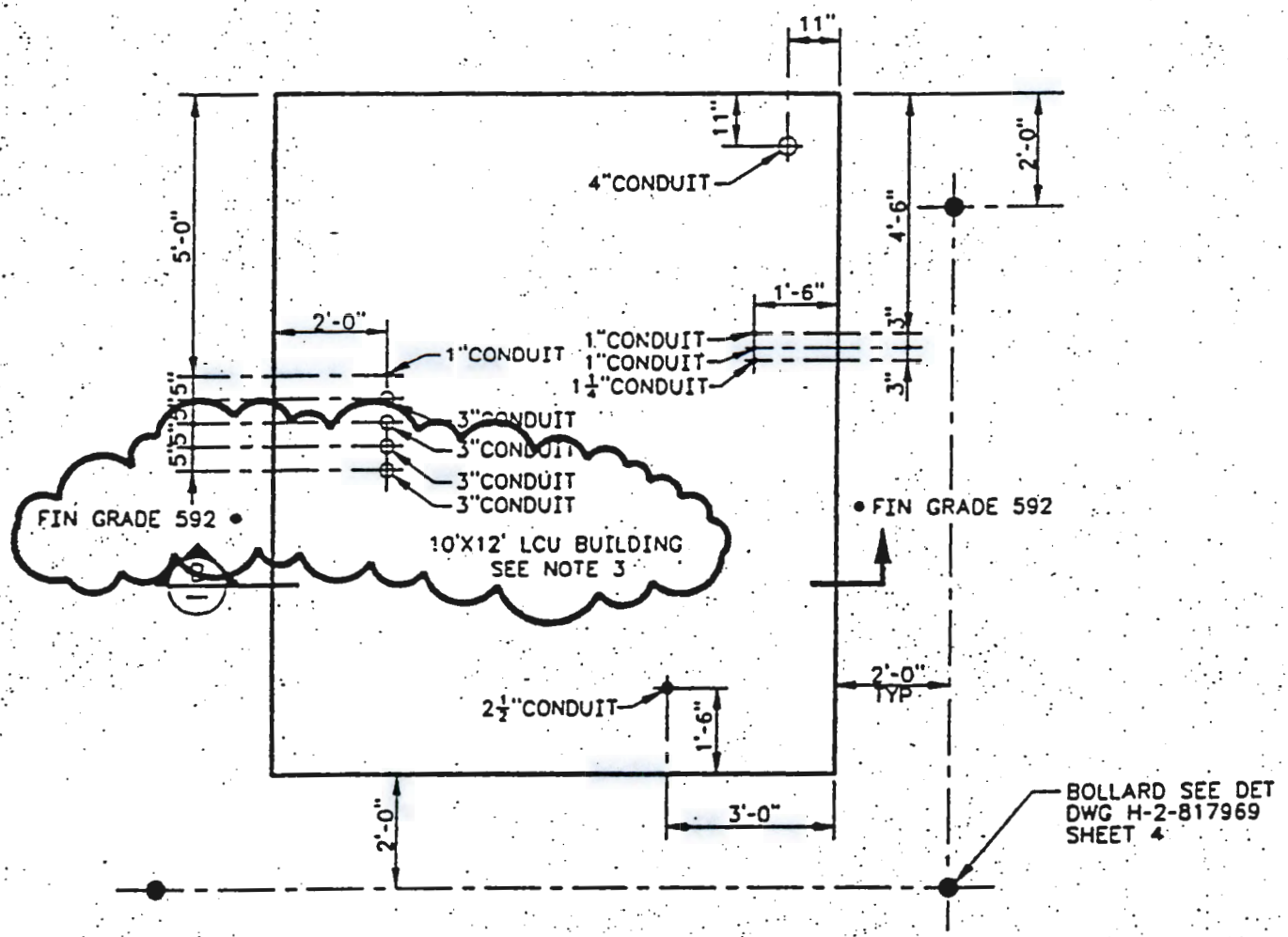

DETAIL 2
SCALE ½"=1'-0" H-2-817969 SH 3

CPF 18

ENGINEERING CHANGE NOTICE

ESSENTIAL

1. ECN 641703

Proj. ECN

2. ECN Category (mark one)	3. Originator's Name, Organization, MSIN, and Telephone No.	4. USQ Required?	5. Date
Supplemental [X] Direct Revision [] Change ECN [] Temporary [] Standby [] Supersedure [] Cancel/Void []	RN Wagner/32200/S6-71/376-4460	[] Yes [X] No	May 13, 1997
	6. Project Title/No./Work Order No. Misc. Mods and As-Builts for ETF Load-In Station	7. Bldg./Sys./Fac. No. 2025E/59A,60M/ 200 Area ETF	8. Approval Designator NA
	9. Document Numbers Changed by this ECN (includes sheet no. and rev.) See Block 13A	10. Related ECN No(s). N/A	11. Related PO No. NA

12a. Modification Work	12b. Work Package No.	12c. Modification Work Complete	12d. Restored to Original Condition (Temp. or Standby ECN only)
[X] Yes (fill out Blk. 12b) [] No (NA Blks. 12b, 12c, 12d)	EL-96-00208, EL-97-00343	Design Authority/Cog. Engineer Signature & Date	NA Design Authority/Cog. Engineer Signature & Date

13a. Description of Change — 13b. Design Baseline Document? [X] Yes [] No

This ECN implements the following changes:

- Remove flow orifice in System 60M transfer line from Load-In Station.
- As-build sample valve and tanker vent valving.
- Add drain lines and valves to Load-In Station pump cases.
- Add bell-reducer funnels and valving to suction of Load-In Station pumps.
- Replace "Facility" with "Station" in all Load-In drawing titles.
- Identify status of Load-In Station drawings to Essential or Support.

Piping, fittings and jointing methods to meet the requirements of Hanford Site piping specification Class M-9. Install, inspect and test the new piping installation in accordance with ASME B31.3 and Addenda for Category D fluid service.

(Block 13a continued on Page 3)

14a. Justification (mark one)

Criteria Change	[]	Design Improvement	[X]	Environmental	[]	Facility Deactivation	[]
As-Found	[X]	Facilitate Const	[]	Const. Error/Omission	[]	Design Error/Omission	[]

14b. Justification Details

- Remove flow orifice in transfer line from Load-In Station to increase flow rate.
- As-build sample valve and tanker vent valving for configuration control.
- Add drain lines and valves to Load-In Station pump cases for improved contamination control.
- Add bell-reducer funnels and valving to allow priming of Load-In Station pumps.
- Replace "Facility" with "Station" in drawing titles to reflect the status of the Load-In Station as part of the 200 Area ETF, rather than a stand-alone facility.
- Identify status of Load-In Station drawings to Essential or Support, as appropriate.

15. Distribution (include name, MSIN, and no. of copies)

N. J. Sullivan	S6-72	1	R. J. Nicklas	S6-72	1
J. E. Geary	S6-71	2	A. K. Yoakum	S6-71	1
R. N. Wagner*	S6-71	2	S. P. Biglin*	S6-74	1
C. M. Towne	S6-74	1	E. A. McNamar*	S6-74	1
J. L. Vigue	S6-74	1	B. S. Darling	S6-72	1
J. F. Berger	S6-74	1	D. P. Nelsen	S6-71	1
T. W. Dallas	S6-71	1	Stations 3/4/5/15/16/30		

(* Advance Copies)

RELEASE STAMP

DATE: MAY 27 1997 HANFORD RELEASE

STA: 30 TOT: 25

A-7900-013-2 (05/96) GEF095

ENGINEERING CHANGE NOTICE	Page 2 of 24	1. ECN (use no. from pg. 1) 641703

16. Design Verification Required	17. Cost Impact				18. Schedule Impact (days)	
	ENGINEERING	NA	CONSTRUCTION		NA	
[X] Yes	Additional	[] $	Additional	[] $	Improvement	[]
[] No	Savings	[] $	Savings	[] $	Delay	[]

19. Change Impact Review: Indicate the related documents (other than the engineering documents identified on Side 1) that will be affected by the change described in Block 13. Enter the affected document number in Block 20.

SDD/DD	[]	Seismic/Stress Analysis	[]	Tank Calibration Manual	[]
Functional Design Criteria	[]	Stress/Design Report	[]	Health Physics Procedure	[]
Operating Specification	[]	Interface Control Drawing	[]	Spares Multiple Unit Listing	[]
Criticality Specification	[]	Calibration Procedure	[]	Test Procedures/Specification	[]
Conceptual Design Report	[]	Installation Procedure	[]	Component Index	[X]
Equipment Spec.	[]	Maintenance Procedure	[]	ASME Coded Item	[]
Const. Spec.	[]	Engineering Procedure	[]	Human Factor Consideration	[]
Procurement Spec.	[]	Operating Instruction	[]	Computer Software	[]
Vendor Information	[X]	Operating Procedure	[]	Electric Circuit Schedule	[]
OM Manual	[]	Operational Safety Requirement	[]	ICRS Procedure	[]
FSAR/SAR	[]	IEFD Drawing	[]	Process Control Manual/Plan	[]
Safety Equipment List	[]	Cell Arrangement Drawing	[]	Process Flow Chart	[]
Radiation Work Permit	[]	Essential Material Specification	[]	Purchase Requisition	[]
Environmental Impact Statement	[]	Fac. Proc. Samp. Schedule	[]	Tickler File	[]
Environmental Report	[]	Inspection Plan	[]		[]
Environmental Permit	[]	Inventory Adjustment Request	[]		[]

20. Other Affected Documents: (NOTE: Documents listed below will not be revised by this ECN.) Signatures below indicate that the signing organization has been notified of other affected documents listed below.

Document Number/Revision	Document Number/Revision	Document Number Revision
JCS Database (Component Index)		

21. Approvals

	Signature	Date		Signature	Date
Design Authority	- R. N. Wagner	5/23/97	Design Agent		
Cog. Eng.	- R. N. Wagner	5/23/97	PE		
Cog. Mgr.	- R. J. Nicklas FOR	5-23-97	QA		
QA			Safety		
Safety			Design		
Environ.			Environ.		
Other			Other		

DEPARTMENT OF ENERGY

Signature or a Control Number that tracks the Approval Signature

ADDITIONAL

Documents changed by this ECN (also see attached drawing changes):

H-2-88766, Sheet 4, Rev. 2
H-2-88779, Sheet 4, Rev. 0
H-9-203, Sheet 1, Rev. 0
H-9-203, Sheet 4, Rev. 0
H-2-817968, Sheet 1, Rev. 1*
H-2-817969, Sheet 1, Rev. 1*
H-2-817969, Sheet 2, Rev. 1*
H-2-817969, Sheet 3, Rev. 1*
H-2-817969, Sheet 4, Rev. 1*
H-2-817969, Sheet 5, Rev. 1*
H-2-817970, Sheet 1, Rev. 1*
H-2-817970, Sheet 2, Rev. 1*
H-2-817971, Sheet 1, Rev. 1*
H-2-817971, Sheet 2, Rev. 1*
H-2-817972, Sheet 1, Rev. 1*
H-2-817973, Sheet 1, Rev. 1*
H-2-817974, Sheet 1, Rev. 2*
H-2-817975, Sheet 1, Rev. 1*
H-2-817976, Sheet 1, Rev. 1*
H-2-817977, Sheet 1, Rev. 1*
H-2-817978, Sheet 1, Rev. 1*
H-2-817980, Sheet 1, Rev. 1*
H-2-817981, Sheet 1, Rev. 1*
H-2-817981, Sheet 2, Rev. 1*
H-2-817981, Sheet 3, Rev. 1*
H-2-817981, Sheet 4, Rev. 1*
H-2-817981, Sheet 5, Rev. 1*
H-2-817983, Sheet 1, Rev. 0*
H-2-817983, Sheet 2, Rev. 1*
H-2-817983, Sheet 3, Rev. 0*
H-2-817983, Sheet 4, Rev. 1*
H-2-817983, Sheet 5, Rev. 0*
H-2-817983, Sheet 6, Rev. 1*
H-2-817983, Sheet 7, Rev. 0*
H-2-817983, Sheet 8, Rev. 0*
H-2-817985, Sheet 1, Rev. 1*
H-2-817985, Sheet 2, Rev. 1*
H-2-817987, Sheet 1, Rev. 1*
H-2-817987, Sheet 3, Rev. 1*
H-2-817987, Sheet 4, Rev. 1*
H-2-817988, Sheet 1, Rev. 1*
H-2-817988, Sheet 2, Rev. 1*
H-2-817988, Sheet 3, Rev. 1*
H-2-817989, Sheet 1, Rev. 1*
H-2-817990, Sheet 1, Rev. 1*
H-2-817991, Sheet 2, Rev. 1*

(* Title and/or Essential/Support status is changed for these drawings per this ECN.)

H-2-88766, Sheet 4, Rev. 2, Zone D-2

IS:

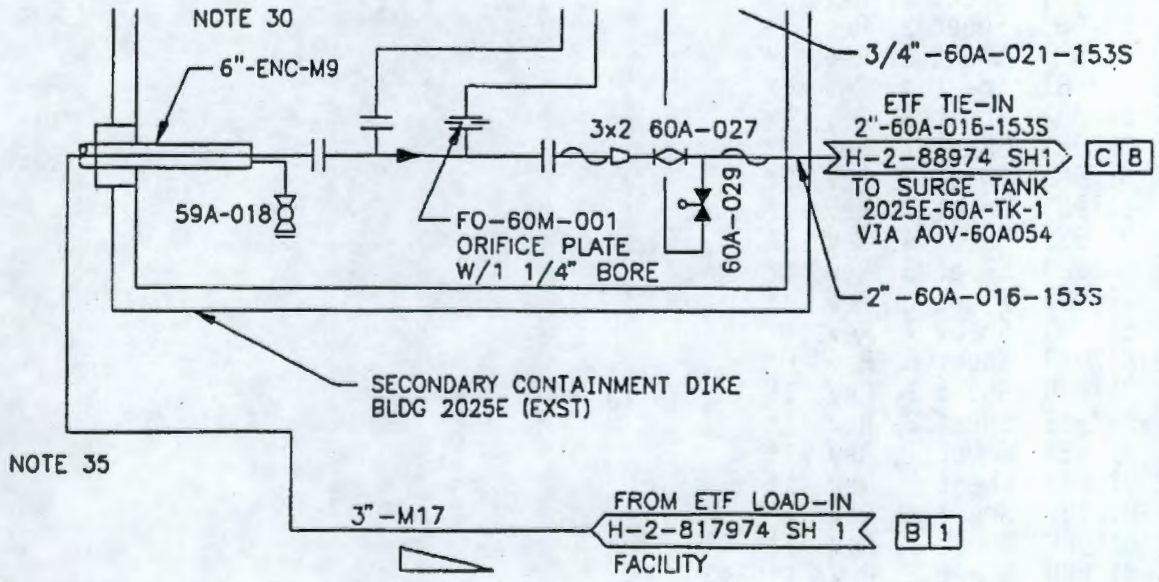

H-2-88766, Sheet 4, Rev. 2, Zone D-2

CHANGE TO:

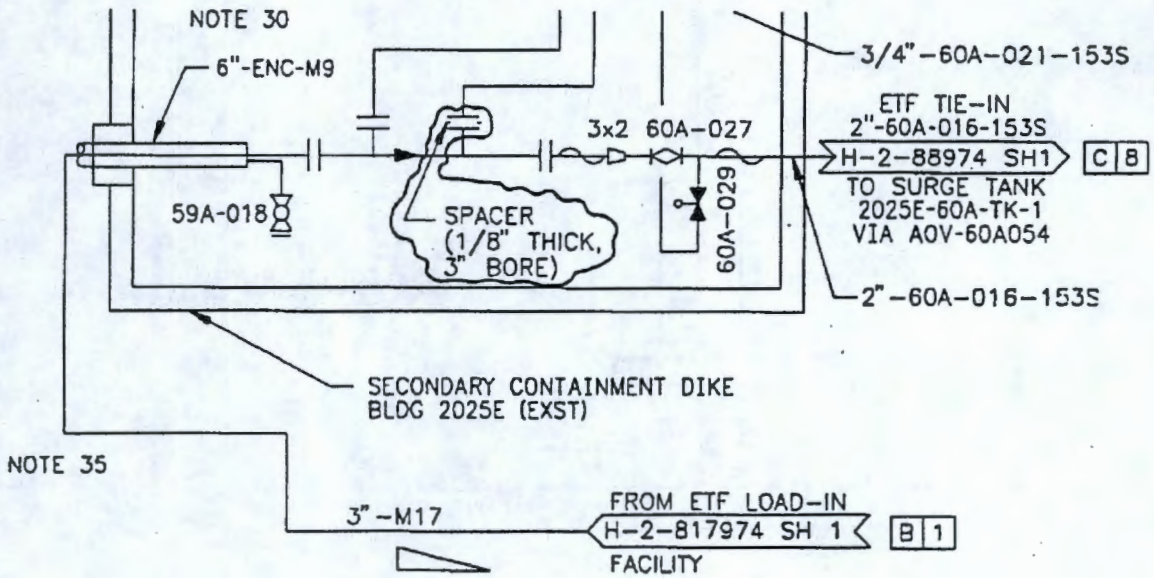

H-2-88779, Sheet 4, Rev. 0, Zone B-2

IS:

B/1 SECTION
SCALE: 3/4" = 1'-0"

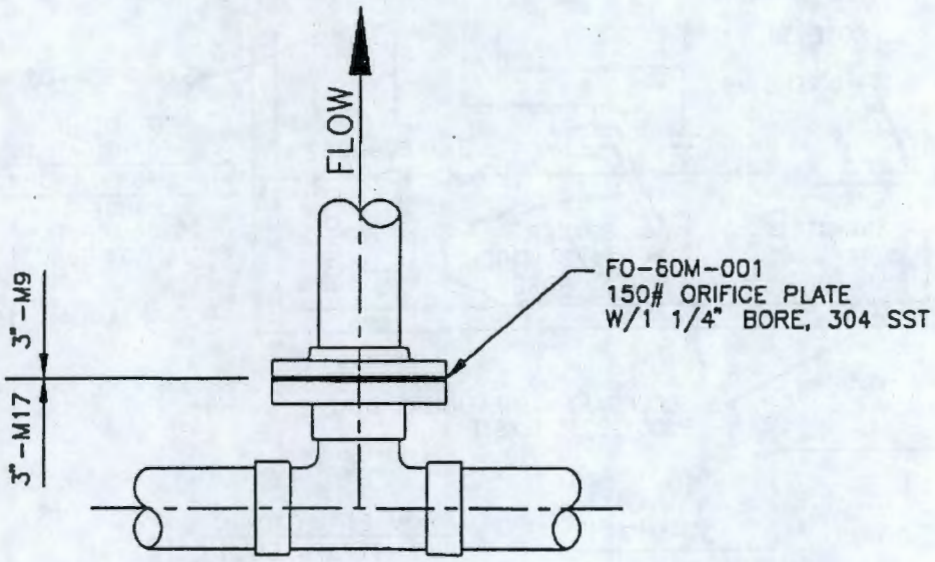

6/1 DETAIL
SCALE: 3/16 SIZE

ECN 641703
Date 5/13/97

H-2-88779, Sheet 4, Rev. 0, Zone B-2

CHANGE TO:

B/1 SECTION
SCALE: 3/4" = 1'-0"

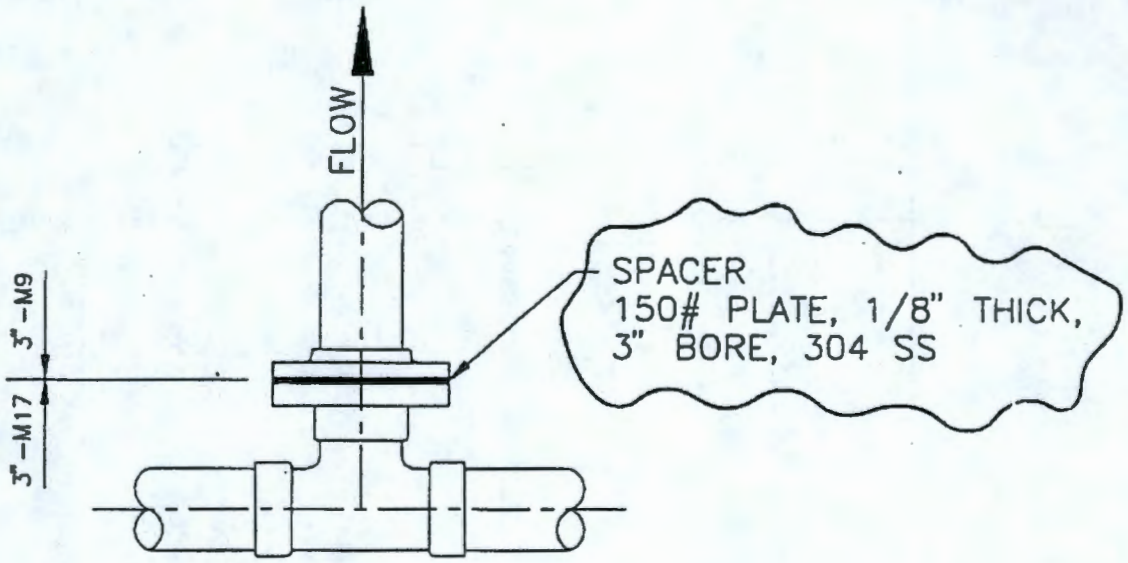

6/1 DETAIL
SCALE: 3/16 SIZE

Sketch for 3" spacer shown in above changes to H-2-88779 and H-2-88766

3" FLANGE SPACER FOR ECN 641703

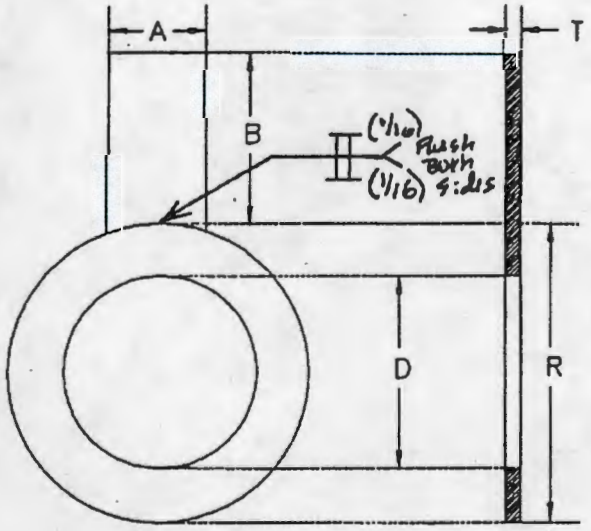

T = 1/8" PLATE THICKNESS

A = 2" (APPROX)
B = 3" (APPROX)

D = 3.00" +/- .05"
R = 5.25" +/- .05"

MATERIAL = 304SS
FLANGE CLASS = 150 LB

H-2-817974, Sheet 1, Rev. 2, Zone C-5

IS:

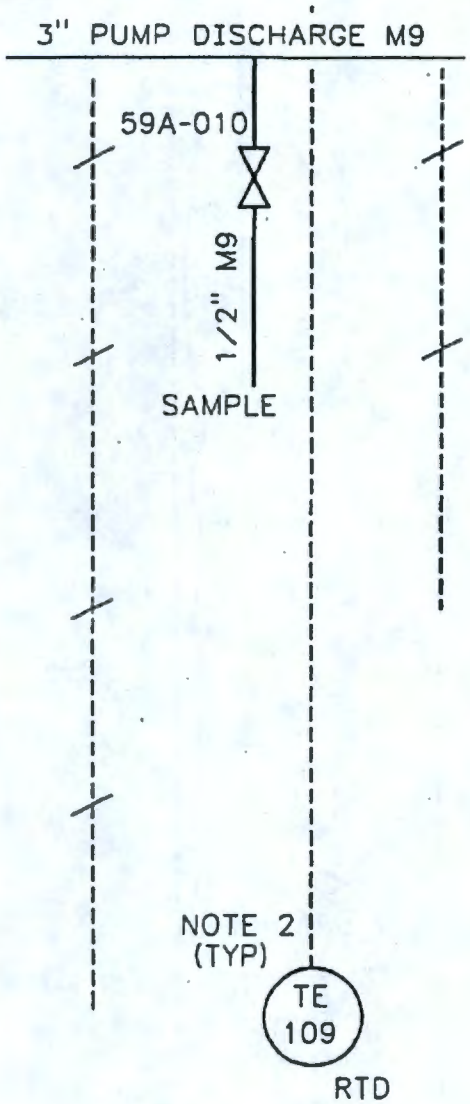

H-2-817974, Sheet 1, Rev. 2, Zone C-5

CHANGE TO:

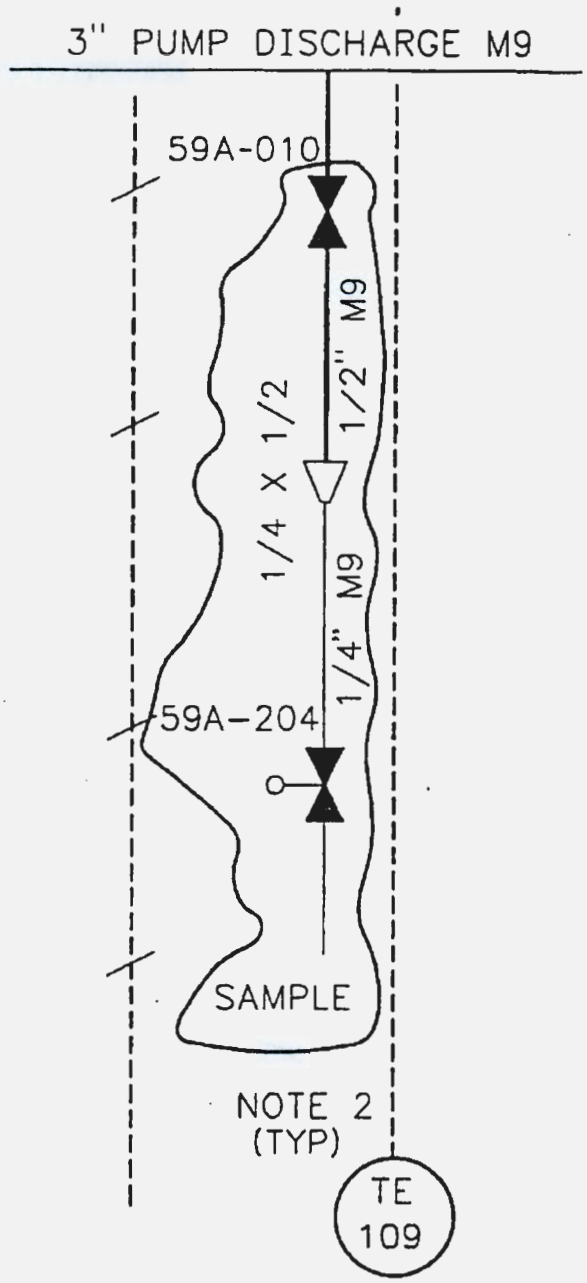

H-2-817974, Sheet 1, Rev. 2, Zone C-7 to D-7

IS:

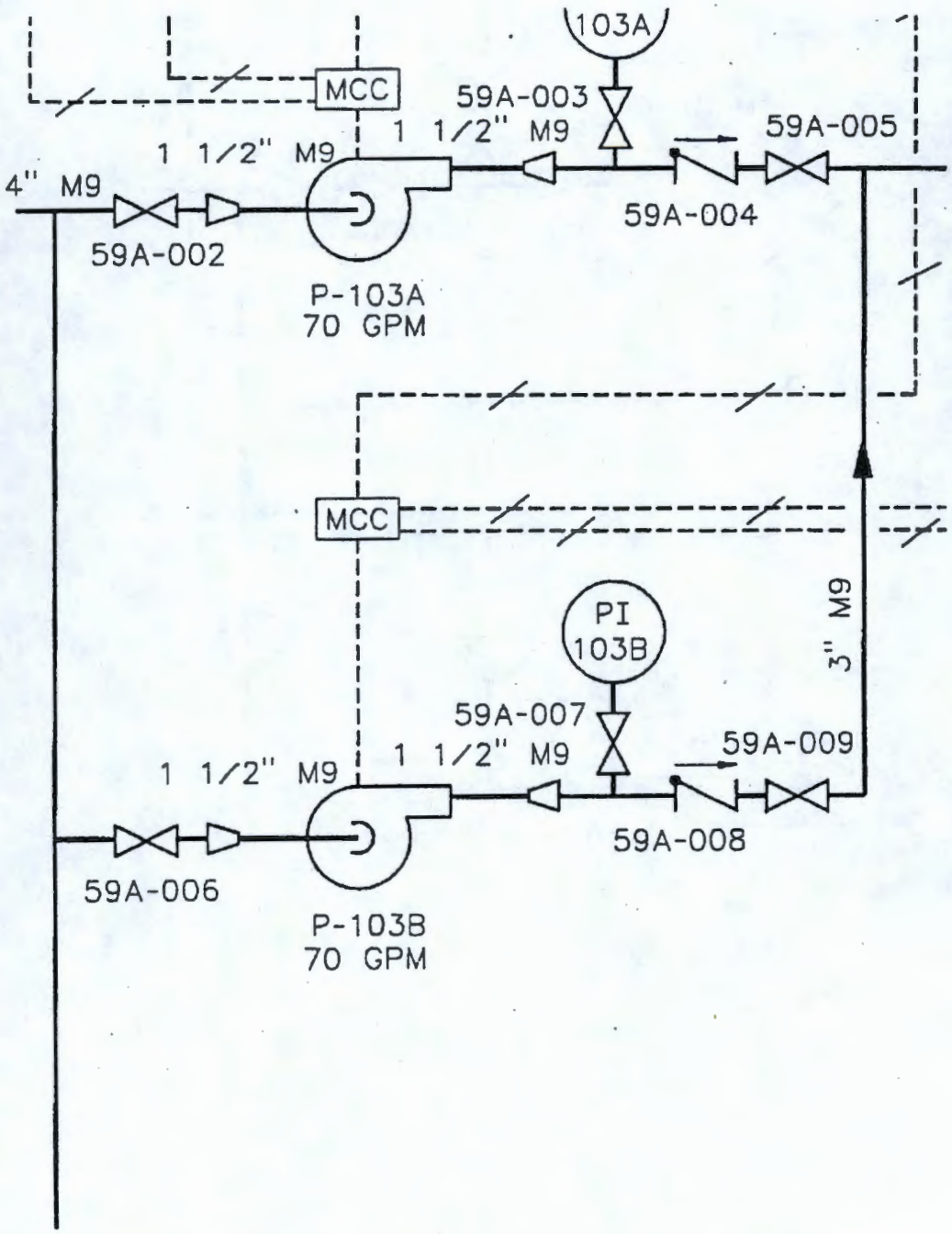

H-2-817974, Sheet 1, Rev. 2, Zone C-7 to D-7

CHANGE TO:

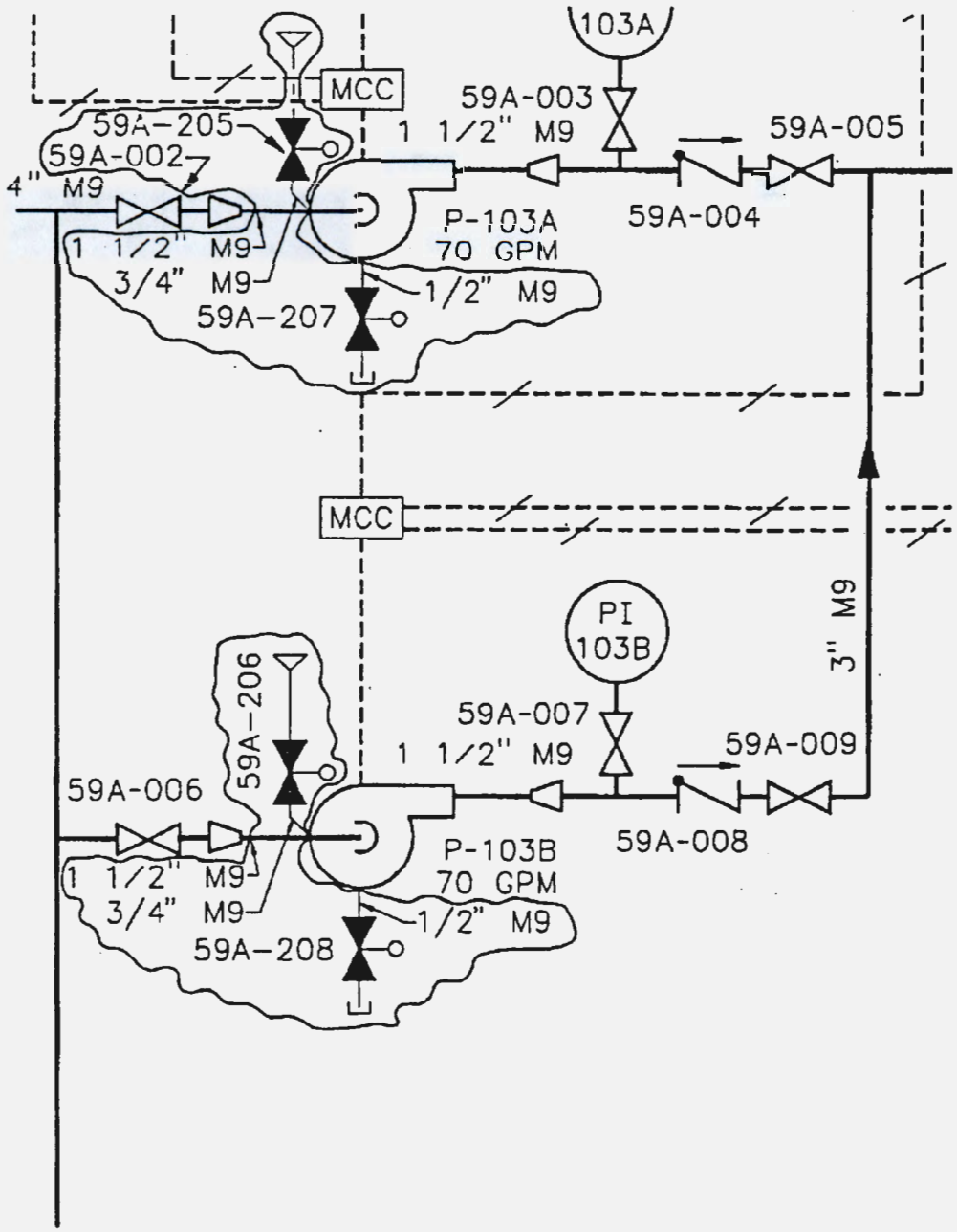

H-9-203, Sheet 1, Rev. 0, Zone E-6

IS:

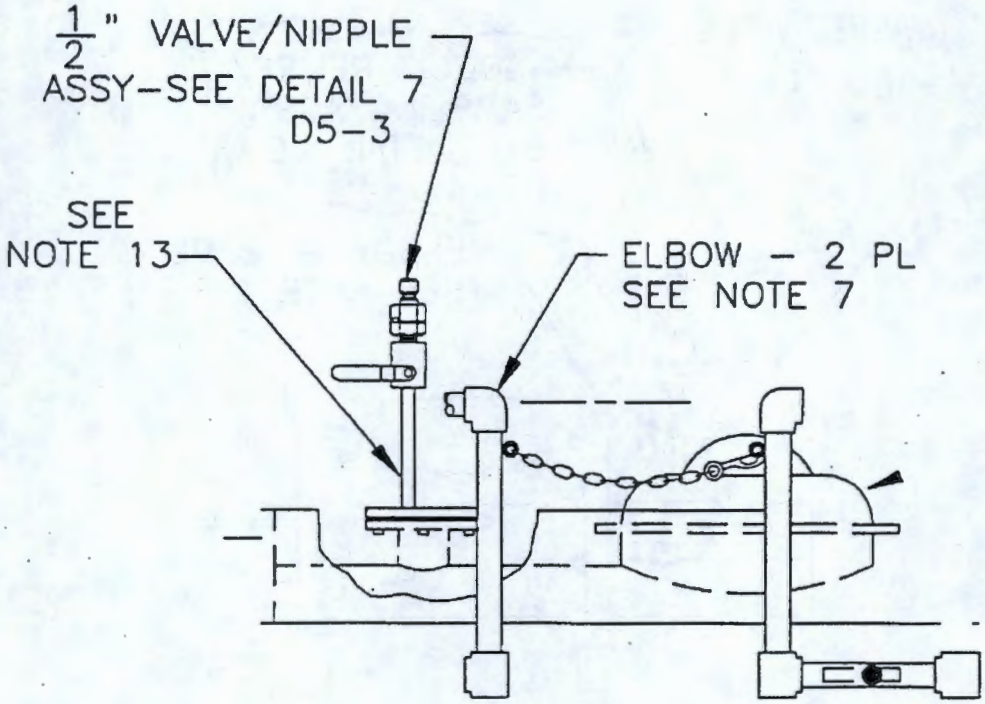

H-9-203, Sheet 1, Rev. 0, Zone E-6

CHANGE TO:

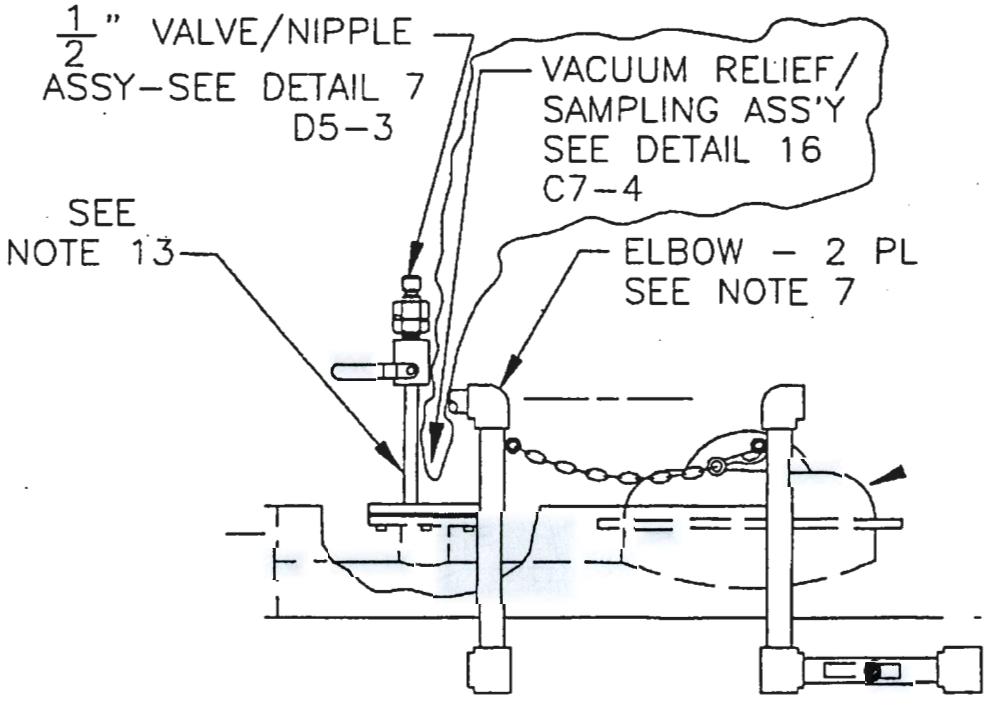

H-9-203, Sheet 4, Rev. 0, Zone D-7

IS:

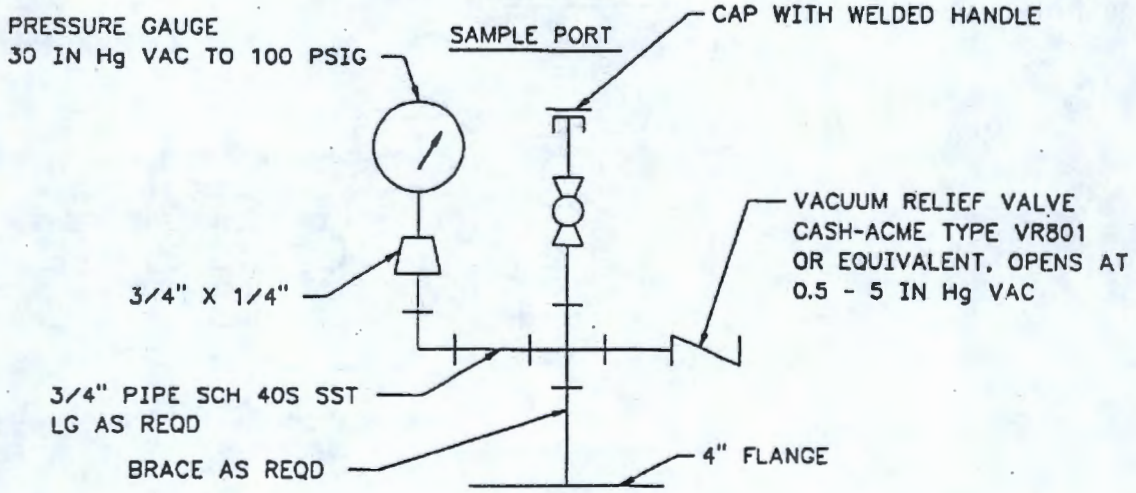

DETAIL 16 C6-2

SCALE: NONE

H-9-203, Sheet 4, Rev. 0, Zone D-7

CHANGE TO:

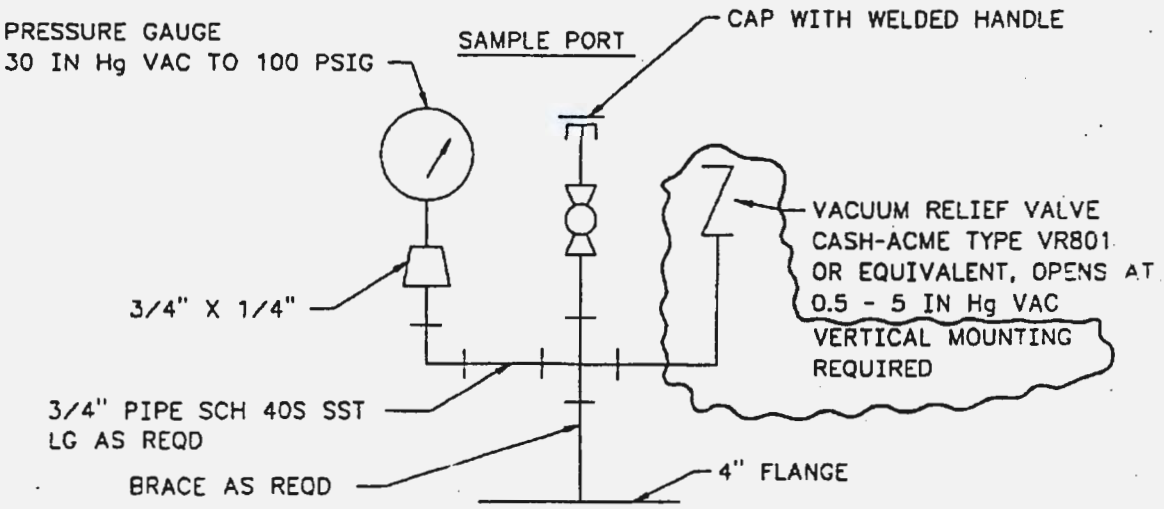

DETAIL 16 C6-2, E6-1

SCALE: NONE

H-2-817968, Sheet 1, Rev. 1, Title

IS: ETF TRUCK LOAD-IN FACILITY LOCATION PLAN & DWG LIST

CHANGE TO: ETF TRUCK LOAD-IN STATION LOCATION PLAN & DWG LIST

Drawing Status: ESSENTIAL

H-2-817969, Sheet 1, Rev. 1, Title

IS: CIVIL ETF TRUCK LOAD-IN FACILITY SITE PLAN

CHANGE TO: CIVIL ETF TRUCK LOAD-IN STATION SITE PLAN

Drawing Status: SUPPORT

H-2-817969, Sheet 2, Rev. 1, Title

IS: CIVIL ETF TRUCK LOAD-IN FACILITY PLAN AND PROFILES

CHANGE TO: CIVIL ETF TRUCK LOAD-IN STATION PLAN AND PROFILES

Drawing Status: SUPPORT

H-2-817969, Sheet 3, Rev. 1, Title

IS: CIVIL ETF TRUCK LOAD-IN FACILITY ENLARGED PLAN

CHANGE TO: CIVIL ETF TRUCK LOAD-IN STATION ENLARGED PLAN

Drawing Status: SUPPORT

H-2-817969, Sheet 4, Rev. 1, Title

IS: CIVIL ETF TRUCK LOAD-IN FACILITY MISCELLANEOUS DETAILS

CHANGE TO: CIVIL ETF TRUCK LOAD-IN STATION MISCELLANEOUS DETAILS

Drawing Status: SUPPORT

H-2-817969, Sheet 5, Rev. 1, Title

IS: CIVIL ETF TRUCK LOAD-IN FACILITY MISCELLANEOUS DETAILS

CHANGE TO: CIVIL ETF TRUCK LOAD-IN STATION MISCELLANEOUS DETAILS

Drawing Status: SUPPORT

H-2-817970, Sheet 1, Rev. 1, Title

IS: STRUCTURAL ETF TRUCK LOAD-IN FACILITY PLAN AND SECTIONS

CHANGE TO: STRUCTURAL ETF TRUCK LOAD-IN STATION PLAN AND SECTIONS

Drawing Status: SUPPORT

H-2-817970, Sheet 2, Rev. 1, Title

IS: STRUCTURAL ETF TRUCK LOAD-IN FACILITY SECTIONS AND DETAILS

CHANGE TO: STRUCTURAL ETF TRUCK LOAD-IN STATION SECTIONS AND DETAILS

Drawing Status: SUPPORT

H-2-817971, Sheet 1, Rev. 1, Title

IS: STRUCTURAL ETF TRUCK LOAD-IN FACILITY STEEL PLAN & SECTIONS

CHANGE TO: STRUCTURAL ETF TRUCK LOAD-IN STATION STEEL PLAN & SECTIONS

Drawing Status: SUPPORT

H-2-817971, Sheet 2, Rev. 1, Title

IS: STRUCTURAL ETF TRUCK LOAD-IN FACILITY STEEL DETAILS

CHANGE TO: STRUCTURAL ETF TRUCK LOAD-IN STATION STEEL DETAILS

Drawing Status: SUPPORT

H-2-817972, Sheet 1, Rev. 1, Title

IS: STRUCTURAL ETF TRUCK LOAD-IN FACILITY SECTIONS AND DETAILS

CHANGE TO: STRUCTURAL ETF TRUCK LOAD-IN STATION SECTIONS AND DETAILS

Drawing Status: SUPPORT

H-2-817973, Sheet 1, Rev. 1, Title

IS: STRUCTURAL ETF TRUCK LOAD-IN FACILITY MISC SECTIONS AND DETAILS

CHANGE TO: STRUCTURAL ETF TRUCK LOAD-IN STATION MISC SECTIONS AND DETAILS

Drawing Status: SUPPORT

H-2-817974, Sheet 1, Rev. 2, Title

IS: P & ID ETF TRUCK LOAD-IN FACILITY

CHANGE TO: P & ID ETF TRUCK LOAD-IN STATION

Drawing Status: ESSENTIAL

H-2-817975, Sheet 1, Rev. 1, Title

IS: PIPING ETF TRUCK LOAD-IN FACILITY PLAN

CHANGE TO: PIPING ETF TRUCK LOAD-IN STATION PLAN

Drawing Status: ESSENTIAL

H-2-817976, Sheet 1, Rev. 1, Title

IS: PIPING ETF TRUCK LOAD-IN FACILITY SECTIONS AND DETAILS

CHANGE TO: PIPING ETF TRUCK LOAD-IN STATION SECTIONS AND DETAILS

Drawing Status: SUPPORT

H-2-817977, Sheet 1, Rev. 1, Title

IS: PIPING ETF TRUCK LOAD-IN FACILITY DETAILS

CHANGE TO: PIPING ETF TRUCK LOAD-IN STATION DETAILS

Drawing Status: SUPPORT

H-2-817978, Sheet 1, Rev. 1, Title

IS: PIPING ETF TRUCK LOAD-IN FACILITY PIPE SUPPORTS

CHANGE TO: PIPING ETF TRUCK LOAD-IN STATION PIPE SUPPORTS

Drawing Status: SUPPORT

H-2-817980, Sheet 1, Rev. 1, Title

IS: INSTRUMENTATION ETF TRUCK LOAD-IN FACILITY LEGEND & SYMBOLS

CHANGE TO: INSTRUMENTATION ETF TRUCK LOAD-IN STATION LEGEND & SYMBOLS

Drawing Status: SUPPORT

H-2-817981, Sheet 1, Rev. 1, Title

IS: INSTRUMENTATION ETF TRUCK LOAD-IN FACILITY LOOP DIAGRAM

CHANGE TO: INSTRUMENTATION ETF TRUCK LOAD-IN STATION LOOP DIAGRAM

Drawing Status: SUPPORT

H-2-817981, Sheet 2, Rev. 1, Title

IS: INSTRUMENTATION ETF TRUCK LOAD-IN FACILITY LOOP DIAGRAM

CHANGE TO: INSTRUMENTATION ETF TRUCK LOAD-IN STATION LOOP DIAGRAM

Drawing Status: SUPPORT

H-2-817981, Sheet 3, Rev. 1, Title

IS: INSTRUMENTATION ETF TRUCK LOAD-IN FACILITY LOOP DIAGRAM

CHANGE TO: INSTRUMENTATION ETF TRUCK LOAD-IN STATION LOOP DIAGRAM

Drawing Status: SUPPORT

H-2-817981, Sheet 4, Rev. 1, Title

IS: INSTRUMENTATION ETF TRUCK LOAD-IN FACILITY LOOP DIAGRAM

CHANGE TO: INSTRUMENTATION ETF TRUCK LOAD-IN STATION LOOP DIAGRAM

Drawing Status: SUPPORT

H-2-817981, Sheet 5, Rev. 1, Title

IS: INSTRUMENTATION ETF TRUCK LOAD-IN FACILITY LOOP DIAGRAM

CHANGE TO: INSTRUMENTATION ETF TRUCK LOAD-IN STATION LOOP DIAGRAM

Drawing Status: SUPPORT

H-2-817983, Sheet 1, Rev. 0, Title

CHANGE TO: Drawing Status: SUPPORT

H-2-817983, Sheet 2, Rev. 1, Title

CHANGE TO: Drawing Status: SUPPORT

H-2-817983, Sheet 3, Rev. 0, Title

CHANGE TO: Drawing Status: SUPPORT

H-2-817983, Sheet 4, Rev. 1, Title

CHANGE TO: Drawing Status: SUPPORT

H-2-817983, Sheet 5, Rev. 0, Title

CHANGE TO: Drawing Status: SUPPORT

H-2-817983, Sheet 6, Rev. 1, Title

CHANGE TO: Drawing Status: SUPPORT

H-2-817983, Sheet 7, Rev. 0, Title

CHANGE TO: Drawing Status: SUPPORT

H-2-817983, Sheet 8, Rev. 0, Title

CHANGE TO: Drawing Status: SUPPORT

H-2-817985, Sheet 1, Rev. 1, Title

IS: INSTRUMENTATION ETF TRUCK LOAD-IN FACILITY SECTIONS AND DETAILS

CHANGE TO: INSTRUMENTATION ETF TRUCK LOAD-IN STATION SECTIONS AND DETAILS

Drawing Status: SUPPORT

H-2-817985, Sheet 2, Rev. 1, Title

IS: INSTRUMENTATION ETF TRUCK LOAD-IN FACILITY SECTIONS AND DETAILS

CHANGE TO: INSTRUMENTATION ETF TRUCK LOAD-IN STATION SECTIONS AND DETAILS

Drawing Status: SUPPORT

H-2-817987, Sheet 1, Rev. 1, Title

IS: ELECTRICAL ETF TRUCK LOAD-IN FACILITY SITE PLAN

CHANGE TO: ELECTRICAL ETF TRUCK LOAD-IN STATION SITE PLAN

Drawing Status: SUPPORT

H-2-817987, Sheet 3, Rev. 1, Title

IS: ELECTRICAL ETF TRUCK LOAD-IN FACILITY SECTIONS & DETAILS

CHANGE TO: ELECTRICAL ETF TRUCK LOAD-IN STATION SECTIONS & DETAILS

Drawing Status: SUPPORT

H-2-817987, Sheet 4, Rev. 1, Title

IS: ELECTRICAL ETF TRUCK LOAD-IN FACILITY SECTIONS & DETAILS

CHANGE TO: ELECTRICAL ETF TRUCK LOAD-IN STATION SECTIONS & DETAILS

Drawing Status: SUPPORT

H-2-817988, Sheet 1, Rev. 1, Title

IS: ELECTRICAL ETF TRUCK LOAD-IN FACILITY PLAN, ONE-LINE & DETAILS

CHANGE TO: ELECTRICAL ETF TRUCK LOAD-IN STATION PLAN, ONE-LINE & DETAILS

Drawing Status: ESSENTIAL

H-2-817988, Sheet 2, Rev. 1, Title

IS: ELECTRICAL ETF TRUCK LOAD-IN FACILITY PLAN, GND & HEAT TRACING

CHANGE TO: ELECTRICAL ETF TRUCK LOAD-IN STATION PLAN, GND & HEAT TRACING

Drawing Status: ESSENTIAL

H-2-817988, Sheet 3, Rev. 1, Title

IS: ELECTRICAL ETF TRUCK LOAD-IN FACILITY PANEL SCHEDULE & DETAILS

CHANGE TO: ELECTRICAL ETF TRUCK LOAD-IN STATION PANEL SCHEDULE & DETAILS

Drawing Status: ESSENTIAL

H-2-817989, Sheet 1, Rev. 1, Title

IS: ELECTRICAL ETF TRUCK LOAD-IN FACILITY ELEMENTARY DIAGRAM

CHANGE TO: ELECTRICAL ETF TRUCK LOAD-IN STATION ELEMENTARY DIAGRAM

Drawing Status: ESSENTIAL

H-2-817990, Sheet 1, Rev. 1, Title

IS: ELECTRICAL ETF TRUCK LOAD-IN FACILITY WIRE & CONDUIT SCHEDULE

CHANGE TO: ELECTRICAL ETF TRUCK LOAD-IN STATION WIRE & CONDUIT SCHEDULE

Drawing Status: ESSENTIAL

H-2-817991, Sheet 2, Rev. 1, Title

IS: ELECTRICAL ETF TRUCK LOAD-IN FACILITY TELECOMMUNICATIONS

CHANGE TO: ELECTRICAL ETF TRUCK LOAD-IN STATION TELECOMMUNICATIONS

Drawing Status: SUPPORT

Hanford Facility RCRA Permit Modification Notification Forms

Part III, Chapter 5 and Attachment 35
242-A Evaporator

Index

Page 2 of 61	Chapter 2, Section 2.1.2.1	Page 32 of 61	Appendix 7A, Section 6.2.1
Page 3 of 61	Chapter 4, Section 4.0.	Page 33 of 61	Appendix 7A, Section 6.2.2
Page 4 of 61	Appendix 7A, Signature Page	Page 34 of 61	Appendix 7A, Section 6.2.3
Page 5 of 61	Appendix 7A, Section 1.0	Page 35 of 61	Appendix 7A, Section 6.2.4
Page 6 of 61	Appendix 7A, Section 1.0	Page 36 of 61	Appendix 7A, Section 6.2.5
Page 7 of 61	Appendix 7A, Section 1.4	Page 37 of 61	Appendix 7A, Section 6.2.6
Page 8 of 61	Appendix 7A, Section 2.0	Page 38 of 61	Appendix 7A, Section 6.3.1
Page 9 of 61	Appendix 7A, Section 3.0	Page 39 of 61	Appendix 7A, Section 6.3.2
Page 10 of 61	Appendix 7A, Section 3.1	Page 40 of 61	Appendix 7A, Section 7.0
Page 11 of 61	Appendix 7A, Section 3.2	Page 41 of 61	Appendix 7A, Section 7.1.2
Page 12 of 61	Appendix 7A, Section 4.0	Page 42 of 61	Appendix 7A, Section 7.2.1.1
Page 13 of 61	Appendix 7A, Section 5.0	Page 43 of 61	Appendix 7A, Section 7.2.1.2
Page 14 of 61	Appendix 7A, Section 5.1	Page 44 of 61	Appendix 7A, Section 7.2.1.3
Page 15 of 61	Appendix 7A, Section 5.3.3	Page 45 of 61	Appendix 7A, Section 7.2.1.5
Page 16 of 61	Appendix 7A, Section 5.5	Page 46 of 61	Appendix 7A, Section 7.2.2
Page 17 of 61	Appendix 7A, Section 6.0	Page 47 of 61	Appendix 7A, Section 7.2.4
Page 18 of 61	Appendix 7A, Section 6.1	Page 48 of 61	Appendix 7A, Section 7.2.5
Page 19 of 61	Appendix 7A, Section 6.1.1.1	Page 49 of 61	Appendix 7A, Section 7.2.6.2
Page 20 of 61	Appendix 7A, Section 6.1.1.2	Page 50 of 61	Appendix 7A, Section 7.2.7
Page 21of 61	Appendix 7A, Section 6.1.1.3	Page 51 of 61	Appendix 7A, Section 7.4.1
Page 22 of 61	Appendix 7A, Section 6.1.2	Page 52 of 61	Appendix 7A, Section 7.4.4
Page 23 of 61	Appendix 7A, Section 6.1.4	Page 53 of 61	Appendix 7A, Section 7.5.3
Page 24 of 61	Appendix 7A, Section 6.1.5	Page 54 of 61	Appendix 7A, Section 8.0
Page 25 of 61	Appendix 7A, Section 6.1.6	Page 55 of 61	Appendix 7A, Section 8.2
Page 26 of 61	Appendix 7A, Section 6.1.7	Page 56 of 61	Appendix 7A, Section 8.3
Page 27 of 61	Appendix 7A, Section 6.1.8.1	Page 57 of 61	Appendix 7A, Section 9.3
Page 28 of 61	Appendix 7A, Section 6.1.8.2	Page 58 of 61	Appendix 7A, Section 11.0
Page 29 of 61	Appendix 7A, Section 6.1.8.3	Page 59 of 61	Appendix 7A, Section 13.0
Page 30 of 61	Appendix 7A, Section 6.1.9	Page 60 of 61	Appendix 7A, Section 14.0
Page 31 of 61	Appendix 7A, Section 6.2	Page 61 of 61	Appendix 7A, Attachment A

Hanford Facility RCRA Permit Modification Notification Form

Unit:	Permit Part & Chapter:
242-A Evaporator	**Part III, Chapter 5 and Attachment 35**

Description of Modification:

Chapter 2, Section 2.1.2.1.:

2.1.2.1. The 207-A Retention Basins

The 207-A retention basins consist of six basins constructed of reinforced concrete, each having about 265,000 liters capacity. The north three basins ~~are~~were used to temporarily store non-contact steam condensate from the 242-A Evaporator for sampling before discharge. Subsequently, the stream condensate was routed directly to the 200 Area Treated Effluent Disposal Facility (TEDF) and the 207-A retention basins are no longer used. The three north basins are included in the 242-A Evaporator waste management unit. The three south basins previously held process condensate mixed waste for sampling and discharge. These basins have been removed from service, emptied, and will be closed under a separate closure plan.

Modification Class: [1 2 3]	Class 1	Class[1]1	Class 2	Class 3
Please check one of the Classes:	X			

Relevant WAC 173-303-830, Appendix I Modification: A.1.

Enter wording of the modification from WAC 173-303-830, Appendix I citation

1. General Permit Provisions
   A. Administrative and Informational changes.

Submitted by Co-Operator:		Reviewed by RL Program Office:		Reviewed by Ecology:		Reviewed by Ecology:	
ESA	12/13/95						
E. S. Aromi	Date	R. F. Guercia	Date	R. J. Julian	Date	L.E. Ruud	Date

[1]Class 1 modifications requiring prior Agency approval.

[2] This is only an advanced notification of an intended Class [1]1, 2, or 3 modification, this should be followed with a formal modification request, and consequently implement the required Public Involvement processes when required.

[3] If the proposed modification does not match any modification listed in WAC 173-303-830 Appendix I, then the proposed modification should automatically be given a Class 3 status. This status may be maintained by the Department of Ecology, or down graded to [1]1, if appropriate.

Hanford Facility RCRA Permit Modification Notification Form

Unit:	Permit Part & Chapter:
242-A Evaporator	**Part III, Chapter 5 and Attachment 35**

Description of Modification:

Chapter 4, Section 4.0.:

Other discharges during 242-A Evaporator processing include condensate from the steam used to heat the waste and cooling water used to condense the vapors. The 242-A Evaporator is designed to prevent contamination of these streams. The fluids on the uncontaminated side of the heat exchangers are maintained at a higher pressure than the waste stream so that uncontaminated fluid migrates toward the contaminated waste if a leak were to occur. The steam condensate is discharged ~~to the 207-A North Retention Basins for storage awaiting transfer~~ to the TEDF. The cooling water is monitored continuously for radiation and discharged ~~directly~~ to TEDF as long as the radiation limits are not exceeded. The steam condensate and cooling water streams were assessed in the stream specific reports (WHC 1990a and WHC 1990b) and are not dangerous waste in accordance with WAC 173-303.

Modification Class: [1 2 3]	Class 1	Class[1]1	Class 2	Class 3
Please check one of the Classes:	X			

Relevant WAC 173-303-830, Appendix I Modification: A.1.

Enter wording of the modification from WAC 173-303-830, Appendix I citation

1. General Permit Provisions
   A. Administrative and Informational changes.

Submitted by Co-Operator:		Reviewed by RL Program Office:		Reviewed by Ecology:		Reviewed by Ecology:	
E. S. Aromi	Date	R. F. Guercia	Date	R. J. Julian	Date	L.E. Ruud	Date

DEC 27 1999

[1]Class 1 modifications requiring prior Agency approval.

[2] This is only an advanced notification of an intended Class [1]1, 2, or 3 modification, this should be followed with a formal modification request, and consequently implement the required Public Involvement processes when required.

[3] If the proposed modification does not match any modification listed in WAC 173-303-830 Appendix I, then the proposed modification should automatically be given a Class 3 status. This status may be maintained by the Department of Ecology, or down graded to [1]1, if appropriate.

Hanford Facility RCRA Permit Modification Notification Form

Unit: 242-A Evaporator	Permit Part & Chapter: Part III, Chapter 5 and Attachment 35

Description of Modification:

Appendix 7A, Signature Page:

This plan covers the following buildings and structures:

242-A Building, 242-AB Building, 242-A-81 Water Service Building, 207-A ~~North~~ Retention Basins.

Approved:

Building Emergency Director Date

Emergency Preparedness Date

Hanford Fire Department Date

242-A Environmental Compliance Officer Date

Modification Class: [1 2 3]	Class 1	Class[1] 1	Class 2	Class 3
Please check one of the Classes:	X			

Relevant WAC 173-303-830, Appendix I Modification: A.1.

Enter wording of the modification from WAC 173-303-830, Appendix I citation

1. General Permit Provisions
   A. Administrative and Informational changes.

Submitted by Co-Operator:		Reviewed by RL Program Office:		Reviewed by Ecology:		Reviewed by Ecology:	
12/13/99							
E. S. Aromi	Date	R. F. Guercia	Date	R. J. Julian	Date	L.E. Ruud	Date

DEC 27 1999

[1]Class 1 modifications requiring prior Agency approval.

[2] This is only an advanced notification of an intended Class [1]1, 2, or 3 modification, this should be followed with a formal modification request, and consequently implement the required Public Involvement processes when required.

[3] If the proposed modification does not match any modification listed in WAC 173-303-830 Appendix I, then the proposed modification should automatically be given a Class 3 status. This status may be maintained by the Department of Ecology, or down graded to [1]1, if appropriate.

Hanford Facility RCRA Permit Modification Notification Form

Unit:	Permit Part & Chapter:
242-A Evaporator	**Part III, Chapter 5 and Attachment 35**

Description of Modification:

Appendix 7A, Section 1.0:

1.0 GENERAL INFORMATION

The 242-A Evaporator, which is part of the 200 Area Liquid Waste Processing Facilities (LWPF), is located on the Hanford Site, a 560-square-mile U.S. Department of Energy (DOE) site in southeastern Washington State. The 242-A Evaporator is located in the southeast portion of the 200 East Area near the center of the Hanford Site. The Hanford Site Emergency Preparedness Program is based upon the incident command system which allows a graded approach for response to emergency events. This plan contains a description of facility specific emergency planning and response. It is used in conjunction with DOE/RL-94-02, *Hanford Emergency Management ~~Response~~ Plan*. Response to events is performed using facility specific and/or site-level emergency procedures.

Modification Class: [1 2 3]	Class 1	Class[1]1	Class 2	Class 3
Please check one of the Classes:	X			

Relevant WAC 173-303-830, Appendix I Modification: A.1.

Enter wording of the modification from WAC 173-303-830, Appendix I citation

1. General Permit Provisions
   A. Administrative and Informational changes.

Submitted by Co-Operator:		Reviewed by RL Program Office:		Reviewed by Ecology:		Reviewed by Ecology:	
E. S. Aromi	12/13/99 Date	R. F. Guercia	Date DEC 27 1999	R. J. Julian	Date	L.E. Ruud	Date

[1]Class 1 modifications requiring prior Agency approval.

[2] This is only an advanced notification of an intended Class [1]1, 2, or 3 modification, this should be followed with a formal modification request, and consequently implement the required Public Involvement processes when required.

[3] If the proposed modification does not match any modification listed in WAC 173-303-830 Appendix I, then the proposed modification should automatically be given a Class 3 status. This status may be maintained by the Department of Ecology, or down graded to [1]1, if appropriate.

Hanford Facility RCRA Permit Modification Notification Form

Unit: 242-A Evaporator	Permit Part & Chapter: Part III, Chapter 5 and Attachment 35

Description of Modification:

Appendix 7A, Section 1.0:

1.2 Facility Location Benton County, Washington; within the 200 East Area.

Buildings/facilities covered by this plan are:

242-A Building

242-AB Building

242-A-81 Water Service Building

207-A ~~North~~ Retention Basins

Modification Class: [1 2 3]	Class 1	Class[1]1	Class 2	Class 3
Please check one of the Classes:	X			

Relevant WAC 173-303-830, Appendix I Modification: A.1.

Enter wording of the modification from WAC 173-303-830, Appendix I citation

1. General Permit Provisions
   A. Administrative and Informational changes.

Submitted by Co-Operator:		Reviewed by RL Program Office:		Reviewed by Ecology:		Reviewed by Ecology:	
12/13/99							
E. S. Aromi	Date	R. F. Guercia	Date	R. J. Julian	Date	L.E. Ruud	Date

DEC 27 1999

[1]Class 1 modifications requiring prior Agency approval.

[2] This is only an advanced notification of an intended Class [1]1, 2, or 3 modification, this should be followed with a formal modification request, and consequently implement the required Public Involvement processes when required.

[3] If the proposed modification does not match any modification listed in WAC 173-303-830 Appendix I, then the proposed modification should automatically be given a Class 3 status. This status may be maintained by the Department of Ecology, or down graded to [1]1, if appropriate.

Hanford Facility RCRA Permit Modification Notification Form

Unit:	Permit Part & Chapter:
242-A Evaporator	**Part III, Chapter 5 and Attachment 35**

Description of Modification:

Appendix 7A, Section 1.4:

1.4 Description of the Facility and Operations

The 242-A Building is a five-story, concrete structure consisting of a main process area (i.e., pump room, load-out room, evaporator room, condenser room), support system area (i.e., aqueous makeup room, heating ventilation and air conditioning (HVAC) room, etc.), and the adjacent office area (i.e., lunch room, lavoratories, offices, etc.). The main process and support system areas are designed and constructed to withstand a 0.25 g horizontal acceleration seismic event, and a 100-mile-per-hour, high wind/tornado.

~~The evaporator room and pump room are posted as high radiation/high contamination/airborne radioactivity areas, with some hot spots inside. The load-out room is posted as a radiological buffer/fixed contamination area with some small contamination areas inside.~~

The 242-AB Building was constructed to house the upgraded 242-A Evaporator monitoring and control system. This building adjoins the 242-A Building and includes the control room (room 18) and electrical room (room 19).

The 207-A ~~North~~ Retention Basins are located east of the 242-A Building, and north of the AP Tank Farm. The Water Service Building (242-A-81) is located directly south of the 242-A Building.

The 242-A Evaporator is connected to Double-Shell Tank (DST) system tanks and valve pits through underground piping that is used for transferring feed and slurry solutions and miscellaneous drainage.

There is a satellite accumulation area located south of the 242-A Building.

Modification Class: [1 2 3]	Class 1	Class[1] 1	Class 2	Class 3
Please check one of the Classes:	X			

Relevant WAC 173-303-830, Appendix I Modification: A.1.

Enter wording of the modification from WAC 173-303-830, Appendix I citation

1. General Permit Provisions
   A. Administrative and Informational changes.

Submitted by Co-Operator:		Reviewed by RL Program Office:		Reviewed by Ecology:		Reviewed by Ecology:	
12/13/99							
E. S. Aromi	Date	R. F. Guercia	Date	R. J. Julian	Date	L.E. Ruud	Date

DEC 27 1999

[1]Class 1 modifications requiring prior Agency approval.

[2] This is only an advanced notification of an intended Class [1]1, 2, or 3 modification, this should be followed with a formal modification request, and consequently implement the required Public Involvement processes when required.

[3] If the proposed modification does not match any modification listed in WAC 173-303-830 Appendix I, then the proposed modification should automatically be given a Class 3 status. This status may be maintained by the Department of Ecology, or down graded to [1]1, if appropriate.

Hanford Facility RCRA Permit Modification Notification Form

Unit: 242-A Evaporator	Permit Part & Chapter: Part III, Chapter 5 and Attachment 35

Description of Modification:

Appendix 7A, Section 2.0:

2.0 PURPOSE

This plan describes both the facility hazards and the impacts of upset and/or emergency conditions. "Emergency" as used in this document includes events meeting the Washington Administrative Code (WAC) 173-303 definition of Emergency as well as DOE-0232.1, "Occurrence Reporting and Processing of Operations Information," categories of Unusual Occurrence and Emergency. These events include spills or releases, fires and explosions, transportation activities, movement of materials, packaging, storage of hazardous materials, and natural and security contingencies. When used in conjunction with DOE/RL-94-02, *Hanford ~~Site~~ Emergency ~~Response~~ Management Plan*, this plan meets the requirements for contingency planning as required by WAC 173-303.

Modification Class: [1 2 3]	Class 1	Class[1]1	Class 2	Class 3
Please check one of the Classes:	X			

Relevant WAC 173-303-830, Appendix I Modification: A.1.

Enter wording of the modification from WAC 173-303-830, Appendix I citation

1. General Permit Provisions
   A. Administrative and Informational changes.

Submitted by Co-Operator:		Reviewed by RL Program Office:		Reviewed by Ecology:		Reviewed by Ecology:	
E. S. Aromi	Date 12/13/99	R. F. Guercia	Date DEC 27 1999	R. J. Julian	Date	L.E. Ruud	Date

[1]Class 1 modifications requiring prior Agency approval.

[2] This is only an advanced notification of an intended Class [1]1, 2, or 3 modification, this should be followed with a formal modification request, and consequently implement the required Public Involvement processes when required.

[3] If the proposed modification does not match any modification listed in WAC 173-303-830 Appendix I, then the proposed modification should automatically be given a Class 3 status. This status may be maintained by the Department of Ecology, or down graded to [1]1, if appropriate.

Hanford Facility RCRA Permit Modification Notification Form

Unit:	Permit Part & Chapter:
242-A Evaporator	**Part III, Chapter 5 and Attachment 35**

Description of Modification:

Appendix 7A, Section 3.0.

3.0 BUILDING EMERGENCY ORGANIZATION

The 242A LWPF is staffed 24 hours each day, and is prepared to respond to emergencies through designated personnel with specific primary, on-call and alternate responsibilities. The 242-A Building Emergency Director (BED) directs the emergency response until the Incident Commander arrives at the event scene. The BED is on duty 24 hours each day. The on-duty Shift Operations Manager is the designated primary BED. There is a designated alternate BED on day shift available for directing emergency response if required. Other personnel required as part of the building emergency organization are also on duty with either primary or alternate responsibilities. The following paragraphs describe this organization and the duties of designated personnel.

Modification Class: [1 2 3]	Class 1	Class[1]1	Class 2	Class 3
Please check one of the Classes:	X			

Relevant WAC 173-303-830, Appendix I Modification: A.1.

Enter wording of the modification from WAC 173-303-830, Appendix I citation

1. General Permit Provisions
   A. Administrative and Informational changes.

Submitted by Co-Operator:		Reviewed by RL Program Office:		Reviewed by Ecology:		Reviewed by Ecology:	
E. S. Aromi	Date 12/13/99	R. F. Guercia	Date DEC 27 1999	R. J. Julian	Date	L.E. Ruud	Date

[1]Class 1 modifications requiring prior Agency approval.

[2] This is only an advanced notification of an intended Class [1]1, 2, or 3 modification, this should be followed with a formal modification request, and consequently implement the required Public Involvement processes when required.

[3] If the proposed modification does not match any modification listed in WAC 173-303-830 Appendix I, then the proposed modification should automatically be given a Class 3 status. This status may be maintained by the Department of Ecology, or down graded to [1]1, if appropriate.

Hanford Facility RCRA Permit Modification Notification Form

Unit:	Permit Part & Chapter:
242-A Evaporator	**Part III, Chapter 5 and Attachment 35**

Description of Modification:

Appendix 7A, Section 3.1.

3.1 Building Emergency Director

Emergency response is directed by the Building Emergency Director (BED) until the Incident Commander arrives. The incident command ~~structure~~ system and staff with supporting on-call personnel fulfill the responsibilities of the Emergency Coordinator as discussed in WAC 173-303-360.

During events, facility personnel perform response duties under the direction of the BED. The Incident Command Post (ICP) is managed by either the senior Hanford Fire Department member present on the scene or senior Hanford Patrol member present on the scene (security events only). These individuals are designated as the Incident Commander (IC) and as such have the authority to request and obtain any resources necessary for protecting people and the environment. The BED becomes a member of the ICP and functions under the direction of the IC. In this role the BED continues to manage and direct facility operations.

A listing of the primary and alternate BEDs by title, work location, and work telephone numbers is contained in Section 13 of this plan. The BED is on the premises or is available through an "on-call" list 24 hours a day. Emergency Preparedness maintains a listing of BED names and work and home telephone numbers at the Patrol Operations Center (POC) in accordance with *Hanford Facility RCRA Permit*, Dangerous Waste Portion, General Condition II.A.4.

Modification Class: [1 2 3]	Class 1	Class[1]1	Class 2	Class 3
Please check one of the Classes:	X			

Relevant WAC 173-303-830, Appendix I Modification: A.1.

Enter wording of the modification from WAC 173-303-830, Appendix I citation

1. General Permit Provisions
   A. Administrative and Informational changes.

Submitted by Co-Operator:		Reviewed by RL Program Office:		Reviewed by Ecology:		Reviewed by Ecology:	
12/13/99							
E. S. Aromi	Date	R. F. Guercia, DEC 7 1999	Date	R. J. Julian	Date	L.E. Ruud	Date

[1]Class 1 modifications requiring prior Agency approval.

[2] This is only an advanced notification of an intended Class [1]1, 2, or 3 modification, this should be followed with a formal modification request, and consequently implement the required Public Involvement processes when required.

[3] If the proposed modification does not match any modification listed in WAC 173-303-830 Appendix I, then the proposed modification should automatically be given a Class 3 status. This status may be maintained by the Department of Ecology, or down graded to [1]1, if appropriate.

Hanford Facility RCRA Permit Modification Notification Form

Unit:	Permit Part & Chapter:
242-A Evaporator	**Part III, Chapter 5 and Attachment 35**

Description of Modification:

Appendix 7A, Section 3.2.

3.2 Other Members

As a minimum, the BED or designee appoints and trains individuals to perform as Personnel Accountability Aides and Staging Area Managers. The accountability aides facilitate the implementation of protective actions (evacuation or take cover) and the accountability of personnel after the protective actions have been implemented. Staging Area Managers coordinate/conduct activities at the staging area. Staging Area Managers and Personnel Accountability Aids are trained annually and are required to participate in two drills per year. In addition, the BED may identify additional support personnel (Radiological Control, Maintenance, Engineering, Hazardous Material Coordinators, etc.) to be part of the building emergency organization. Sections 13.0~~, BUILDING EMERGENCY ORGANIZATION,~~ of this plan discusses the location of information regarding positions, names, and telephone numbers. Copies are distributed to appropriate facility locations and to the Hanford Site Emergency Preparedness organization.

Modification Class: [1,2,3]	Class 1	Class[1]1	Class 2	Class 3
Please check one of the Classes:	X			

Relevant WAC 173-303-830, Appendix I Modification: A.1.

Enter wording of the modification from WAC 173-303-830, Appendix I citation

1. General Permit Provisions
   A. Administrative and Informational changes.

Submitted by Co-Operator:		Reviewed by RL Program Office:		Reviewed by Ecology:		Reviewed by Ecology:	
12/13/99							
E. S. Aromi	Date	R. F. Guercia	Date	R. J. Julian	Date	L.E. Ruud	Date

[1]Class 1 modifications requiring prior Agency approval.

[2] This is only an advanced notification of an intended Class [1]1, 2, or 3 modification, this should be followed with a formal modification request, and consequently implement the required Public Involvement processes when required.

[3] If the proposed modification does not match any modification listed in WAC 173-303-830 Appendix I, then the proposed modification should automatically be given a Class 3 status. This status may be maintained by the Department of Ecology, or down graded to [1]1, if appropriate.

Hanford Facility RCRA Permit Modification Notification Form

Unit:	Permit Part & Chapter:
242-A Evaporator	**Part III, Chapter 5 and Attachment 35**

Description of Modification:

Appendix 7A, Section 4.0.

4.0 IMPLEMENTATION OF THE PLAN

To meet the requirements of WAC 173-303, this plan will be implemented when the BED has determined that a release, fire, or explosion involving dangerous waste or dangerous waste constituents that could threaten human health or the environment (WAC 173-303-350, Emergencies) has occurred at the facility. An incident requiring evacuation of personnel or the summoning of emergency response units will not necessarily indicate that the plan will be implemented. The incident classification process is described in DOE/RL-94-02, Section 4.~~2~~0.

Under DOE guidance, this plan will be implemented whenever the BED determines that one of the incidents listed in Section 6.0 of this plan has or will occur and that the severity is or will be such that there is a potential to endanger human health or the environment ~~(DOE Unusual Occurrence or Emergency)~~.

DOE Declared Emergencies are assigned one of three classifications which in the order of increasing severity are: 1) Alert Emergency, 2) Site Area Emergency, and 3) General Emergency. The 242-A Evaporator implements responses to these DOE emergencies through this plan and criteria identified in DOE-0223, RLEP 1.1, Appendix 1-2.M, and other documents listed in Attachment A of this plan.

The BED assesses each incident to determine the response necessary to protect personnel, the facility, and the environment. If emergency assistance from Hanford Patrol, Hanford Fire Department, or ambulance units is required, the Hanford Emergency Response Number (911) is used to contact the POC and request the desired assistance. To request other resources or assistance from outside the facility, the POC business number is used (373-3800).

Modification Class: [1 2 3]	Class 1	Class[1]1	Class 2	Class 3
Please check one of the Classes:	X			

Relevant WAC 173-303-830, Appendix I Modification: A.1.

Enter wording of the modification from WAC 173-303-830, Appendix I citation

1. General Permit Provisions
   A. Administrative and Informational changes.

Submitted by Co-Operator:		Reviewed by RL Program Office:		Reviewed by Ecology:		Reviewed by Ecology:	
12/13/99							
E. S. Aromi	Date	R. F. Guercia	Date	R. J. Julian	Date	L.E. Ruud	Date

[1]Class 1 modifications requiring prior Agency approval.

[2] This is only an advanced notification of an intended Class [1]1, 2, or 3 modification, this should be followed with a formal modification request, and consequently implement the required Public Involvement processes when required.

[3] If the proposed modification does not match any modification listed in WAC 173-303-830 Appendix I, then the proposed modification should automatically be given a Class 3 status. This status may be maintained by the Department of Ecology, or down graded to [1]1, if appropriate.

Hanford Facility RCRA Permit Modification Notification Form

Unit:	Permit Part & Chapter:
242-A Evaporator	**Part III, Chapter 5 and Attachment 35**

Description of Modification:

Appendix 7A, Section 5.0:

5.0 FACILITY HAZARDS

~~Facility hazards and potential targets are identified and evaluated in a hazards assessment required by DOE Orders for the 242-A Evaporator. The hazards assessment is not used in the Hanford Facility contingency planning program.~~ This section describes hazards that pose significant risks to human health or the environment and identify quantitative values for those risks.

~~Certain information in this plan pertains only to DOE Order considerations (e.g., discussions pertaining to hazards from hazardous materials and radioactive-only materials). Terms such as Emergency Response Protective Guidelines (ERPG), Alert Emergencies, Site Area Emergencies, and General Emergencies pertain only to DOE Order planning considerations. These hazards and terms are not part of the Hanford Facility contingency planning program. The only portion of this section that is part of the Hanford Facility contingency planning program are the chemical constituent hazards discussed in Section 5.3.~~

Modification Class: [1 2 3]	Class 1	Class[1]1	Class 2	Class 3
Please check one of the Classes:	X			

Relevant WAC 173-303-830, Appendix I Modification: A.1.

Enter wording of the modification from WAC 173-303-830, Appendix I citation

1. General Permit Provisions
   A. Administrative and Informational changes.

Submitted by Co-Operator:		Reviewed by RL Program Office:		Reviewed by Ecology:		Reviewed by Ecology:	
E. S. Aromi	Date 12/13/99	R. F. Guercia	Date	R. J. Julian	Date	L.E. Ruud	Date

DEC 2 7 1999

[1]Class 1 modifications requiring prior Agency approval.

[2] This is only an advanced notification of an intended Class [1]1, 2, or 3 modification, this should be followed with a formal modification request, and consequently implement the required Public Involvement processes when required.

[3] If the proposed modification does not match any modification listed in WAC 173-303-830 Appendix I, then the proposed modification should automatically be given a Class 3 status. This status may be maintained by the Department of Ecology, or down graded to [1]1, if appropriate.

Hanford Facility RCRA Permit Modification Notification Form

Unit: 242-A Evaporator	Permit Part & Chapter: Part III, Chapter 5 and Attachment 35

Description of Modification:

Appendix 7A, Section 5.1

5.1 Hazardous Materials

~~M~~Potentially hazardous materials at the 242-A Evaporator ~~defined in DOE Order guidance as potentially hazardous~~ are used for normal maintenance and support functions. These could include acids, caustics, oils, diesel fuel and solvents. Diesel fuel also presents a flammability hazard. A significant release of materials would be classed as a WAC 173-303 or DOE Emergency.

~~An ammonia cylinder, capable of releasing 0.34 cubic meters of 5000 part per million (ppm) ammonia, is located on the third floor level in the northeast corner of the HVAC room. The ammonia is used for calibration of the stack ammonia monitor. The worst case ammonia concentration from release of the entire contents of the cylinder would be less than 25 ppm in the HVAC Room. This is less than the ERPG-1 value and the threshold limit value. No emergency planning is required.~~

Material Safety Data Sheets (MSDSs) are at the following locations:

- 2025EA Building:
  - Room 101
  - Room 104
- 2025E Building
  - Maintenance Shop, Room 103
  - Control Room
- 242-A Evaporator Control Room.

Modification Class: [1 2 3]	Class 1	Class[1]1	Class 2	Class 3
Please check one of the Classes:	X			

Relevant WAC 173-303-830, Appendix I Modification: A.1.

Enter wording of the modification from WAC 173-303-830, Appendix I citation

1. General Permit Provisions
   A. Administrative and Informational changes.

Submitted by Co-Operator:		Reviewed by RL Program Office:		Reviewed by Ecology:		Reviewed by Ecology:	
E. S. Aromi	Date 12/13/99	R. F. Guercia	Date	R. J. Julian	Date	L.E. Ruud	Date

DEC 27 1999

[1]Class 1 modifications requiring prior Agency approval.

[2] This is only an advanced notification of an intended Class [1]1, 2, or 3 modification, this should be followed with a formal modification request, and consequently implement the required Public Involvement processes when required.

[3] If the proposed modification does not match any modification listed in WAC 173-303-830 Appendix I, then the proposed modification should automatically be given a Class 3 status. This status may be maintained by the Department of Ecology, or down graded to [1]1, if appropriate.

Hanford Facility RCRA Permit Modification Notification Form

Unit:	Permit Part & Chapter:
242-A Evaporator	**Part III, Chapter 5 and Attachment 35**

Description of Modification:

Appendix 7A, Section 5.3.3.:

5.3.3. Gaseous Form

A waste blending error in the DST system potentially could generate large amounts of ammonia gas from the 242-A Evaporator vent system during processing. ~~This could require an emergency classification~~

Modification Class: [1 2 3]	Class 1	Class[1]1	Class 2	Class 3
Please check one of the Classes:	X			

Relevant WAC 173-303-830, Appendix I Modification: A.1.

Enter wording of the modification from WAC 173-303-830, Appendix I citation

1. General Permit Provisions
   A. Administrative and Informational changes.

Submitted by Co-Operator:		Reviewed by RL Program Office:		Reviewed by Ecology:		Reviewed by Ecology:	
12/13/99							
E. S. Aromi	Date	R. F. Guercia	Date	R. J. Julian	Date	L.E. Ruud	Date

DEC 2 1 2000

[1]Class 1 modifications requiring prior Agency approval.

[2] This is only an advanced notification of an intended Class [1]1, 2, or 3 modification, this should be followed with a formal modification request, and consequently implement the required Public Involvement processes when required.

[3] If the proposed modification does not match any modification listed in WAC 173-303-830 Appendix I, then the proposed modification should automatically be given a Class 3 status. This status may be maintained by the Department of Ecology, or down graded to [1]1, if appropriate.

Hanford Facility RCRA Permit Modification Notification Form

Unit:	Permit Part & Chapter:
242-A Evaporator	**Part III, Chapter 5 and Attachment 35**

Description of Modification:

Appendix 7A, Section 5.5:

5.5. Criticality

A criticality is not a credible accident at the 242-A Evaporator. ~~Emergency planning is not required.~~

Modification Class: [1 2 3]	Class 1	Class[1]1	Class 2	Class 3
Please check one of the Classes:	X			

Relevant WAC 173-303-830, Appendix I Modification: A.1.

Enter wording of the modification from WAC 173-303-830, Appendix I citation

1. General Permit Provisions
   A. Administrative and Informational changes.

Submitted by Co-Operator:		Reviewed by RL Program Office:		Reviewed by Ecology:		Reviewed by Ecology:	
E. S. Aromi	Date 12/13/99	R. F. Guercia	Date DEC 27 1999	R. J. Julian	Date	L.E. Ruud	Date

[1]Class 1 modifications requiring prior Agency approval.

[2] This is only an advanced notification of an intended Class [1]1, 2, or 3 modification, this should be followed with a formal modification request, and consequently implement the required Public Involvement processes when required.

[3] If the proposed modification does not match any modification listed in WAC 173-303-830 Appendix I, then the proposed modification should automatically be given a Class 3 status. This status may be maintained by the Department of Ecology, or down graded to [1]1, if appropriate.

Hanford Facility RCRA Permit Modification Notification Form

Unit: 242-A Evaporator	Permit Part & Chapter: Part III, Chapter 5 and Attachment 35

Description of Modification:

Appendix 7A, Section 6.0:

6.0 POTENTIAL EMERGENCY CONDITIONS

~~The objective of this section is to identify WAC 173-303 and DOE Order potential emergency conditions and to identify the appropriate DOE Order emergency classification level. Protective action responses based on these classifications are discussed in Section 7.0. Technical justification for the values and limits identified in this section are provided in the hazards assessment required by DOE Orders for the 242-A Evaporator. The hazards assessment is not used in the Hanford Facility contingency planning program.~~

Potential emergency conditions ~~fall into~~ under both WAC 173-303 and DOE guidance may include one of three basic categories: operation~~al~~ (process upsets, fires and explosions, loss of utilities, spills, and releases), natural phenomena (earthquakes and storms), and security contingencies (bomb threats, hostage situations~~). For operational emergencies, event frequency coupled with accident severity provide the criteria for emergency plan response~~, etc.) The following are conditions that may lead to an emergency situation (WAC or DOE defined) at the 242A Evaporator and require the implementation of this plan.

Potential radioactive/dangerous/mixed waste release modes include fires, explosions, spills, or releases. These events are evaluated based on the potential impact to operations and subsequent release of waste materials. Potential consequences to human health or the environment are the ultimate criteria for event classification and protective response actions. Additionally, prolonged small releases are evaluated for their potential to impact human health or the environment.

Modification Class: [1 2 3]	Class 1	Class[1]1	Class 2	Class 3
Please check one of the Classes:	X			

Relevant WAC 173-303-830, Appendix I Modification: A.1.

Enter wording of the modification from WAC 173-303-830, Appendix I citation

1. General Permit Provisions
   A. Administrative and Informational changes.

Submitted by Co-Operator:		Reviewed by RL Program Office:		Reviewed by Ecology:		Reviewed by Ecology:	
E. S. Aromi	12/13/99 Date	R. F. Guercia	Date DEC 27 1999	R. J. Julian	Date	L.E. Ruud	Date

[1]Class 1 modifications requiring prior Agency approval.

[2] This is only an advanced notification of an intended Class [1]1, 2, or 3 modification, this should be followed with a formal modification request, and consequently implement the required Public Involvement processes when required.

[3] If the proposed modification does not match any modification listed in WAC 173-303-830 Appendix I, then the proposed modification should automatically be given a Class 3 status. This status may be maintained by the Department of Ecology, or down graded to [1]1, if appropriate.

Hanford Facility RCRA Permit Modification Notification Form

Unit: 242-A Evaporator	Permit Part & Chapter: Part III, Chapter 5 and Attachment 35

Description of Modification:

Appendix 7A, Section 6.1:

6.1 Operational~~s~~ Emergencies

The conditions for operational~~s~~ emergencies are present only when mixed waste is present in the vapor-liquid separator, C-A-1, recirculation loop, and ancillary equipment.

Modification Class: [1 2 3]	Class 1	Class[1]1	Class 2	Class 3
Please check one of the Classes:	X			

Relevant WAC 173-303-830, Appendix I Modification: A.1.

Enter wording of the modification from WAC 173-303-830, Appendix I citation

1. General Permit Provisions
   A. Administrative and Informational changes.

Submitted by Co-Operator:		Reviewed by RL Program Office:		Reviewed by Ecology:		Reviewed by Ecology:	
ESA 12/13/99							
E. S. Aromi	Date	R. F. Guercia	Date	R. J. Julian	Date	L.E. Ruud	Date

DEC 27 1999

[1]Class 1 modifications requiring prior Agency approval.

[2] This is only an advanced notification of an intended Class [1]1, 2, or 3 modification, this should be followed with a formal modification request, and consequently implement the required Public Involvement processes when required.

[3] If the proposed modification does not match any modification listed in WAC 173-303-830 Appendix I, then the proposed modification should automatically be given a Class 3 status. This status may be maintained by the Department of Ecology, or down graded to [1]1, if appropriate.

Hanford Facility RCRA Permit Modification Notification Form

Unit:	Permit Part & Chapter:
242-A Evaporator	**Part III, Chapter 5 and Attachment 35**

Description of Modification:

Appendix 7A, Section 6.1.1.1:

6.1.1.1 Loss of Electrical Power

A loss of electrical power could lead to a loss of compressed air, causing the vapor-liquid separator, C-A-1, drain valves to open and suddenly dump the contents to DST system tank 241-AW-102. A potential over pressurization and subsequent radiological release could occur from that tank. Mitigating actions for a radiological release from the DST system are taken ~~by Tank Waste Remediation System (TWRS)~~ per the tank farms ~~building~~ emergency ~~plan~~procedures.

A loss of electrical power would interrupt processing but would not produce an emergency event at the 242-A Evaporator.

Modification Class: [1 2 3]	Class 1	Class[1]1	Class 2	Class 3
Please check one of the Classes:	X			

Relevant WAC 173-303-830, Appendix I Modification: A.1.

Enter wording of the modification from WAC 173-303-830, Appendix I citation

1. General Permit Provisions
   A. Administrative and Informational changes.

Submitted by Co-Operator:		Reviewed by RL Program Office:		Reviewed by Ecology:		Reviewed by Ecology:	
12/13/99							
E. S. Aromi	Date	R. F. Guercia DEC 27 1999	Date	R. J. Julian	Date	L.E. Ruud	Date

[1]Class 1 modifications requiring prior Agency approval.

[2] This is only an advanced notification of an intended Class [1]1, 2, or 3 modification, this should be followed with a formal modification request, and consequently implement the required Public Involvement processes when required.

[3] If the proposed modification does not match any modification listed in WAC 173-303-830 Appendix I, then the proposed modification should automatically be given a Class 3 status. This status may be maintained by the Department of Ecology, or down graded to [1]1, if appropriate.

Hanford Facility RCRA Permit Modification Notification Form

Unit: 242-A Evaporator	Permit Part & Chapter: Part III, Chapter 5 and Attachment 35

Description of Modification:

Appendix 7A, Section 6.1.1.2:

6.1.1.2 Loss of Compressed Air

A loss of compressed air would cause the vapor-liquid separator, C-A-1, drain valve to open and suddenly dump the contents to DST system tank 241-AW-102. A potential over pressurization and subsequent radiological release could occur from that tank. Mitigating actions for a radiological release from the DST system are taken ~~by TWRS~~ per the tank farms ~~building~~ emergency ~~plan~~procedures.

A loss of compressed air would interrupt processing but would not produce an emergency event at the 242-A Evaporator.

Modification Class: [1 2 3]	Class 1	Class[1]1	Class 2	Class 3
Please check one of the Classes:	X			

Relevant WAC 173-303-830, Appendix I Modification: A.1.

Enter wording of the modification from WAC 173-303-830, Appendix I citation

1. General Permit Provisions
   A. Administrative and Informational changes.

Submitted by Co-Operator:		Reviewed by RL Program Office:		Reviewed by Ecology:		Reviewed by Ecology:	
E. S. Aromi	Date 12/13/99	R. F. Guercia	Date DEC 17 1999	R. J. Julian	Date	L.E. Ruud	Date

[1]Class 1 modifications requiring prior Agency approval.

[2] This is only an advanced notification of an intended Class [1], 2, or 3 modification, this should be followed with a formal modification request, and consequently implement the required Public Involvement processes when required.

[3] If the proposed modification does not match any modification listed in WAC 173-303-830 Appendix I, then the proposed modification should automatically be given a Class 3 status. This status may be maintained by the Department of Ecology, or down graded to [1]1, if appropriate.

Hanford Facility RCRA Permit Modification Notification Form

Unit:	Permit Part & Chapter:
242-A Evaporator	**Part III, Chapter 5 and Attachment 35**

Description of Modification:

Appendix 7A, Section 6.1.1.3:

6.1.1.3 Loss of Raw Water

Raw water can be used as seal water for the mechanical seals on P-B-1 recirculation pump and P-B-2 slurry pump when the normal supply of process condensate is not available. If raw water is supplied to the seals, and loss of raw water occurs, failure of mechanical seals could occur, causing a spray release of mixed waste into the facility. The spray release scenario is discussed in Section 6.1.8. Interlocks are provided to stop the pumps on low seal water flow.

Raw water supplies cooling water to the EC-1, EC-2, and EC-3 condensers. Loss of raw water during facility operation will cause high temperatures in TK-C-100, which will result in a major process upset.

Raw water supplies cooling to the air compressors, with sanitary water available as a backup. If loss of raw water occurs, and backup cooling by sanitary water is not initiated within 15 to 20 minutes, the air compressors could overheat, causing a loss of compressed air. A loss of compressed air is discussed in section 6.1.1.2.

Modification Class: [1 2 3]	Class 1	Class[1]1	Class 2	Class 3
Please check one of the Classes:	X			

Relevant WAC 173-303-830, Appendix I Modification: A.1.

Enter wording of the modification from WAC 173-303-830, Appendix I citation

1. General Permit Provisions
   A. Administrative and Informational changes.

Submitted by Co-Operator:		Reviewed by RL Program Office:		Reviewed by Ecology:		Reviewed by Ecology:	
ESA	12/13/95						
E. S. Aromi	Date	R. F. Guercia	Date	R. J. Julian	Date	L.E. Ruud	Date

[1]Class 1 modifications requiring prior Agency approval.

[2] This is only an advanced notification of an intended Class [1]1, 2, or 3 modification, this should be followed with a formal modification request, and consequently implement the required Public Involvement processes when required.

[3] If the proposed modification does not match any modification listed in WAC 173-303-830 Appendix I, then the proposed modification should automatically be given a Class 3 status. This status may be maintained by the Department of Ecology, or down graded to [1]1, if appropriate.

Hanford Facility RCRA Permit Modification Notification Form

Unit:	Permit Part & Chapter:
242-A Evaporator	**Part III, Chapter 5 and Attachment 35**

Description of Modification:

Appendix 7A, Section 6.1.2:

6.1.2 Major Process Disruption/Loss of Plant Control

A major process disruption/loss of plant control ~~would~~ can be caused by failure of the Monitor and Control System (MCS) computer. A loss of MCS could cause the vapor-liquid separator, C-A-1, drain valve to open and suddenly dump the contents to DST system tank 241-AW-102. A potential over pressurization and subsequent radiological release could occur from that tank. Mitigating actions for a radiological release from the DST system are taken ~~by TWRS~~ per ~~the~~ tank farms ~~building~~ emergency ~~plan~~procedures.

Modification Class: [1 2 3]	Class 1	Class[1]1	Class 2	Class 3
Please check one of the Classes:	X			

Relevant WAC 173-303-830, Appendix I Modification: A.1.

Enter wording of the modification from WAC 173-303-830, Appendix I citation

1. General Permit Provisions
   A. Administrative and Informational changes.

Submitted by Co-Operator:		Reviewed by RL Program Office:		Reviewed by Ecology:		Reviewed by Ecology:	
12/13/99							
E. S. Aromi	Date	R. F. Guercia	Date	R. J. Julian	Date	L.E. Ruud	Date

DEC 27 1999

[1]Class 1 modifications requiring prior Agency approval.

[2] This is only an advanced notification of an intended Class [1]1, 2, or 3 modification, this should be followed with a formal modification request, and consequently implement the required Public Involvement processes when required.

[3] If the proposed modification does not match any modification listed in WAC 173-303-830 Appendix I, then the proposed modification should automatically be given a Class 3 status. This status may be maintained by the Department of Ecology, or down graded to [1]1, if appropriate.

Hanford Facility RCRA Permit Modification Notification Form

Unit:	Permit Part & Chapter:
242-A Evaporator	**Part III, Chapter 5 and Attachment 35**

Description of Modification:

Appendix 7A, Section 6.1.4:

6.1.4 Fire and/or Explosion

A fire/explosion could generate highly toxic and/or corrosive fumes. Flying debris could result from explosions or compressed gas cylinder failure. Process system disruption, loss of plant control, and breach of process system boundaries could result from the flying debris.

~~An Alert Emergency in accordance with DOE Orders would be declared if~~If mixed waste is present in the vapor-liquid separator, C-A-1, process recirculation loop, and ancillary equipment, and a fire occurs in the control room, aqueous makeup room, HVAC room, condenser room, pump room, or evaporator room lasting longer than 30 minutes and requiring fire department actions for suppression~~.~~

~~An Alert Emergency in accordance with DOE Orders would be declared if~~, emergency classification should be made per criteria stated in DOE-0223, *Emergncy Plan Implemeting Procedure*, Appendix 1-2.M.

If an explosion is confirmed to have occurred at the 242-A Evaporator and the explosion threatens areas containing hazardous chemicals and/or radioactive material~~. An alert Emergency would also be declared~~, or if the explosion breaches the external 242-A Building walls when the vapor-liquid separator contains solution~~. E~~emergency classifications are per ~~site wide procedures listed in Attachment A~~ DOE-0223, *Emergency Plan Implementing Procedure*, Appendix 1-2.M.

Modification Class: [1 2 3]	Class 1	Class[1]1	Class 2	Class 3
Please check one of the Classes:	X			

Relevant WAC 173-303-830, Appendix I Modification: A.1.

Enter wording of the modification from WAC 173-303-830, Appendix I citation

1. General Permit Provisions
   A. Administrative and Informational changes.

Submitted by Co-Operator:	Reviewed by RL Program Office:	Reviewed by Ecology:	Reviewed by Ecology:
12/13/99			
E. S. Aromi Date	R. F. Guercia Date	R. J. Julian Date	L.E. Ruud Date

[1]Class 1 modifications requiring prior Agency approval.

[2] This is only an advanced notification of an intended Class [1]1, 2, or 3 modification, this should be followed with a formal modification request, and consequently implement the required Public Involvement processes when required.

[3] If the proposed modification does not match any modification listed in WAC 173-303-830 Appendix I, then the proposed modification should automatically be given a Class 3 status. This status may be maintained by the Department of Ecology, or down graded to [1]1, if appropriate.

Hanford Facility RCRA Permit Modification Notification Form

Unit:	Permit Part & Chapter:
242-A Evaporator	**Part III, Chapter 5 and Attachment 35**

Description of Modification:

Appendix 7A, Section 6.1.5:

6.1.5 Hazardous Material Spill or Release

A waste blending error in the DST system potentially could generate large amounts of ammonia gas from the 242-A Evaporator vent system during processing. Ammonia stack releases of more than 5 grams per second (40 pounds per hour) ~~meet Alert Emergency criteria in accordance with DOE Orders. Ammonia~~ and ammonia stack releases of more than 38 grams per second (300 pounds per hour) meet ~~Site Area Emergency~~ emergency criteria ~~in accordance with DOE Orders.~~

~~The bounding consequences for mixed waste releases are radiological in nature. Radiological releases are discussed in Section 6.1.8.~~

stated in DOE-0223, *Emergency Plan Implementing Procedure*, Appendix 1-2.M.

Modification Class: [1 2 3]	Class 1	Class[1]1	Class 2	Class 3
Please check one of the Classes:	X			

Relevant WAC 173-303-830, Appendix I Modification: A.1.

Enter wording of the modification from WAC 173-303-830, Appendix I citation

1. General Permit Provisions
   A. Administrative and Informational changes.

Submitted by Co-Operator:		Reviewed by RL Program Office:		Reviewed by Ecology:		Reviewed by Ecology:	
E. S. Aromi	Date	R. F. Guercia	Date	R. J. Julian	Date	L.E. Ruud	Date

DEC 2 7 1999

[1]Class 1 modifications requiring prior Agency approval.

[2] This is only an advanced notification of an intended Class [1]1, 2, or 3 modification, this should be followed with a formal modification request, and consequently implement the required Public Involvement processes when required.

[3] If the proposed modification does not match any modification listed in WAC 173-303-830 Appendix I, then the proposed modification should automatically be given a Class 3 status. This status may be maintained by the Department of Ecology, or down graded to [1]1, if appropriate.

Hanford Facility RCRA Permit Modification Notification Form

Unit:	Permit Part & Chapter:
242-A Evaporator	**Part III, Chapter 5 and Attachment 35**

Description of Modification:

Appendix 7A, Section 6.1.6:

6.1.6 Radioactive/Mixed Waste Spill

The ~~bounding~~ hazards consequences for mixed waste releases are radiological. Radiological releases are discussed in Section 6.1.8.

Modification Class: [1 2 3]	Class 1	Class[1]1	Class 2	Class 3
Please check one of the Classes:	X			

Relevant WAC 173-303-830, Appendix I Modification: A.1.

Enter wording of the modification from WAC 173-303-830, Appendix I citation

1. General Permit Provisions
   A. Administrative and Informational changes.

Submitted by Co-Operator:		Reviewed by RL Program Office:		Reviewed by Ecology:		Reviewed by Ecology:	
E. S. Aromi	Date 12/13/99	R. F. Guercia	Date	R. J. Julian	Date	L.E. Ruud	Date

[1]Class 1 modifications requiring prior Agency approval.

[2] This is only an advanced notification of an intended Class [1]1, 2, or 3 modification, this should be followed with a formal modification request, and consequently implement the required Public Involvement processes when required.

[3] If the proposed modification does not match any modification listed in WAC 173-303-830 Appendix I, then the proposed modification should automatically be given a Class 3 status. This status may be maintained by the Department of Ecology, or down graded to [1]1, if appropriate.

Hanford Facility RCRA Permit Modification Notification Form

Unit: 242-A Evaporator	Permit Part & Chapter: Part III, Chapter 5 and Attachment 35

Description of Modification:

Appendix 7A, Section 6.1.7:

6.1.7 Transportation and/or Packaging Incidents

A transportation and/or packaging incident involving hazardous chemicals or samples could result in exposure to hazardous and radioactive materials. Potential environmental damage by their release could also occur. ~~General criteria discussed in Section 5.0 will be used to classify these events.~~

Modification Class: [1 2 3]	Class 1	Class[1]1	Class 2	Class 3
Please check one of the Classes:	X			

Relevant WAC 173-303-830, Appendix I Modification: A.1.

Enter wording of the modification from WAC 173-303-830, Appendix I citation

1. General Permit Provisions
   A. Administrative and Informational changes.

Submitted by Co-Operator:		Reviewed by RL Program Office:		Reviewed by Ecology:		Reviewed by Ecology:	
12/13/99							
E. S. Aromi	Date	R. F. Guercia	Date	R. J. Julian	Date	L.E. Ruud	Date

[1]Class 1 modifications requiring prior Agency approval.

[2] This is only an advanced notification of an intended Class [1]1, 2, or 3 modification, this should be followed with a formal modification request, and consequently implement the required Public Involvement processes when required.

[3] If the proposed modification does not match any modification listed in WAC 173-303-830 Appendix I, then the proposed modification should automatically be given a Class 3 status. This status may be maintained by the Department of Ecology, or down graded to [1]1, if appropriate.

Hanford Facility RCRA Permit Modification Notification Form

Unit:	Permit Part & Chapter:
242-A Evaporator	**Part III, Chapter 5 and Attachment 35**

Description of Modification:

Appendix 7A, Section 6.1.8.1:

6.1.8.1 Ventilation System Release

If a mixed waste release causes K1 ventilation or vessel ventilation system high radiation, it is necessary to quickly assess whether any radioactive material was released. ~~A Cutie Pie (CP) open window (near contact) reading of ≥ 15 millirad per hour but < 150 millirad per hour on a ventilation system sample filter, requires an Alert Emergency~~ If there is a release of radioactive material, emergency classification ~~in accordance with DOE Orders~~. ~~Results ≥ 150 mr/hr require a Site Area Emergency classification in accordance with DOE Orders~~will be made per criteria stated in DOE-0233, *Emergency Plan Implementing Procedure*, Appendix 1-2.M.

Modification Class: [1 2 3]	Class 1	Class[1]1	Class 2	Class 3
Please check one of the Classes:	X			

Relevant WAC 173-303-830, Appendix I Modification: A.1.

Enter wording of the modification from WAC 173-303-830, Appendix I citation

1. General Permit Provisions
   A. Administrative and Informational changes.

Submitted by Co-Operator:		Reviewed by RL Program Office:		Reviewed by Ecology:		Reviewed by Ecology:	
E. S. Aromi	Date	R. F. Guercia	Date	R. J. Julian	Date	L.E. Ruud	Date

[1]Class 1 modifications requiring prior Agency approval.

[2] This is only an advanced notification of an intended Class [1]1, 2, or 3 modification, this should be followed with a formal modification request, and consequently implement the required Public Involvement processes when required.

[3] If the proposed modification does not match any modification listed in WAC 173-303-830 Appendix I, then the proposed modification should automatically be given a Class 3 status. This status may be maintained by the Department of Ecology, or down graded to [1]1, if appropriate.

Hanford Facility RCRA Permit Modification Notification Form

Unit:	Permit Part & Chapter:
242-A Evaporator	**Part III, Chapter 5 and Attachment 35**

Description of Modification:

Appendix 7A, Section 6.1.8.2:

6.1.8.2 Release of Mixed Waste into Facility

~~An Alert Emergency~~ A catastrophic release of mixed waste into the Pump or Evaporator rooms would necessitate an emergency classification ~~is required for a catastrophic dumping of vapor-liquid separator C-A-1 contents into the evaporator room or pump room.~~

~~A Site Area Emergency Classification is required for a catastrophic dumping of vapor-liquid separator C-A-1 contents into the evaporator room or pump room, the K1 vent system high radiation shutdown interlock fails, and the ventilation system fans continue to operate~~per DOE-0233, *Emergency Plan Implementing Procedure,* Appendix 1-2.M.

Modification Class: [1 2 3]	Class 1	Class[1] 1	Class 2	Class 3
Please check one of the Classes:	X			

Relevant WAC 173-303-830, Appendix I Modification: A.1.

Enter wording of the modification from WAC 173-303-830, Appendix I citation

1. General Permit Provisions
   A. Administrative and Informational changes.

Submitted by Co-Operator:		Reviewed by RL Program Office:		Reviewed by Ecology:		Reviewed by Ecology:	
E. S. Aromi	12/13/99 Date	R. F. Guercia	Date	R. J. Julian	Date	L.E. Ruud	Date

DEC 27 1999

[1]Class 1 modifications requiring prior Agency approval.

[2] This is only an advanced notification of an intended Class [1]1, 2, or 3 modification, this should be followed with a formal modification request, and consequently implement the required Public Involvement processes when required.

[3] If the proposed modification does not match any modification listed in WAC 173-303-830 Appendix I, then the proposed modification should automatically be given a Class 3 status. This status may be maintained by the Department of Ecology, or down graded to [1]1, if appropriate.

Hanford Facility RCRA Permit Modification Notification Form

Unit:	Permit Part & Chapter:
242-A Evaporator	**Part III, Chapter 5 and Attachment 35**

Description of Modification:

Appendix 7A, Section 6.1.8.3:

6.1.8.3 Loss of Confinement

~~An Alert Emergency is required for~~ If a loss of confinement in the 242-A Building, ~~as indicated by activation of two or more Area Radiation Monitors in the AMU and HVAC room, or Continuous Air Monitor alarm in the survey area, and local confirmation [on two of the three contamination area pressure indicators for rooms A, B, or C (located on the HVAC panel)] that pressure is greater than 0.0 inches water gauge~~occurs, along with a loss of negative pressure in radiation areas, emergency classification will be made per DOE-0233, *Emergency Plan Implementing Procedure*, Appendix 1-2.M.

Modification Class: [1 2 3]	Class 1	Class[1]1	Class 2	Class 3
Please check one of the Classes:	X			

Relevant WAC 173-303-830, Appendix I Modification: A.1.

Enter wording of the modification from WAC 173-303-830, Appendix I citation

1. General Permit Provisions
   A. Administrative and Informational changes.

Submitted by Co-Operator:		Reviewed by RL Program Office:		Reviewed by Ecology:		Reviewed by Ecology:	
E. S. Aromi	Date 12/13/99	R. F. Guercia	Date DEC 27 1999	R. J. Julian	Date	L.E. Ruud	Date

[1]Class 1 modifications requiring prior Agency approval.

[2] This is only an advanced notification of an intended Class [1]1, 2, or 3 modification, this should be followed with a formal modification request, and consequently implement the required Public Involvement processes when required.

[3] If the proposed modification does not match any modification listed in WAC 173-303-830 Appendix I, then the proposed modification should automatically be given a Class 3 status. This status may be maintained by the Department of Ecology, or down graded to [1]1, if appropriate.

Hanford Facility RCRA Permit Modification Notification Form

Unit: 242-A Evaporator	Permit Part & Chapter: Part III, Chapter 5 and Attachment 35

Description of Modification:

Appendix 7A, Section 6.1.9:

6.1.9 Criticality

A criticality is not a credible accident at the 242-A Evaporator. ~~Emergency planning is not required.~~

Modification Class: [1 2 3]	Class 1	Class[1]1	Class 2	Class 3
Please check one of the Classes:	X			

Relevant WAC 173-303-830, Appendix I Modification: A.1.

Enter wording of the modification from WAC 173-303-830, Appendix I citation

1. General Permit Provisions
   A. Administrative and Informational changes.

Submitted by Co-Operator:		Reviewed by RL Program Office:		Reviewed by Ecology:		Reviewed by Ecology:	
ESA	12/13/99	RF	DEC 27 1999				
E. S. Aromi	Date	R. F. Guercia	Date	R. J. Julian	Date	L.E. Ruud	Date

[1]Class 1 modifications requiring prior Agency approval.

[2] This is only an advanced notification of an intended Class [1]1, 2, or 3 modification, this should be followed with a formal modification request, and consequently implement the required Public Involvement processes when required.

[3] If the proposed modification does not match any modification listed in WAC 173-303-830 Appendix I, then the proposed modification should automatically be given a Class 3 status. This status may be maintained by the Department of Ecology, or down graded to [1]1, if appropriate.

Hanford Facility RCRA Permit Modification Notification Form

Unit:	Permit Part & Chapter:
242-A Evaporator	**Part III, Chapter 5 and Attachment 35**

Description of Modification:

Appendix 7A, Section 6.2:

6.2 Natural Phenomena

~~The conditions for n~~ Natural phenomena ~~emergencies are present only when mixed waste is present in the vapor-liquid separator, C-A-1, recirculation loop, and ancillary equipment~~ are discussed in the following sections.

Modification Class: [1 2 3]	Class 1	Class [1]1	Class 2	Class 3
Please check one of the Classes:	X			

Relevant WAC 173-303-830, Appendix I Modification: A.1.

Enter wording of the modification from WAC 173-303-830, Appendix I citation

1. General Permit Provisions
   A. Administrative and Informational changes.

Submitted by Co-Operator:		Reviewed by RL Program Office:		Reviewed by Ecology:		Reviewed by Ecology:	
E. S. Aromi	Date	R. F. Guercia	Date	R. J. Julian	Date	L.E. Ruud	Date

DEC 27 1999

[1]Class 1 modifications requiring prior Agency approval.

[2] This is only an advanced notification of an intended Class [1]1, 2, or 3 modification, this should be followed with a formal modification request, and consequently implement the required Public Involvement processes when required.

[3] If the proposed modification does not match any modification listed in WAC 173-303-830 Appendix I, then the proposed modification should automatically be given a Class 3 status. This status may be maintained by the Department of Ecology, or down graded to [1]1, if appropriate.

Hanford Facility RCRA Permit Modification Notification Form

Unit:	Permit Part & Chapter:
242-A Evaporator	**Part III, Chapter 5 and Attachment 35**

Description of Modification:

Appendix 7A, Section 6.2.1:

6.2.1 Seismic Event

Depending on the magnitude of the seismic event, severe structural damage could occur at the 242-AEvaporator, resulting in serious injuries or fatalities and the release of hazardous or radioactive materials to the environment. Damaged electrical circuits and wiring could result in the initiation of fires. Any seismic event that is felt by personnel, with some minor facility damage, and disturbance of tall objects at the 242-A Evaporator locations that house hazardous chemicals and/or radioactive materials requires classification ~~as an Alert~~ per DOE--0223, *Emergency Plan Implmenting Procedure*, Appendix 1-2.M. An emergency classification upgrade could occur based on facility conditions and/or actual hazardous material or radioactive/dangerous/mixed waste releases determined by personnel assessing quake damage.

Modification Class: [1 2 3]	Class 1	Class[1]1	Class 2	Class 3
Please check one of the Classes:	X			

Relevant WAC 173-303-830, Appendix I Modification: A.1.

Enter wording of the modification from WAC 173-303-830, Appendix I citation

1. General Permit Provisions
   A. Administrative and Informational changes.

Submitted by Co-Operator:		Reviewed by RL Program Office:		Reviewed by Ecology:		Reviewed by Ecology:	
12/13/91							
E. S. Aromi	Date	R. F. Guercia	Date	R. J. Julian	Date	L.E. Ruud	Date

DEC

[1]Class 1 modifications requiring prior Agency approval.

[2] This is only an advanced notification of an intended Class [1]1, 2, or 3 modification, this should be followed with a formal modification request, and consequently implement the required Public Involvement processes when required.

[3] If the proposed modification does not match any modification listed in WAC 173-303-830 Appendix I, then the proposed modification should automatically be given a Class 3 status. This status may be maintained by the Department of Ecology, or down graded to [1]1, if appropriate.

Hanford Facility RCRA Permit Modification Notification Form

Unit:	Permit Part & Chapter:
242-A Evaporator	**Part III, Chapter 5 and Attachment 35**

Description of Modification:

Appendix 7A, Section 6.2.2:

6.2.2 Ashfall/Snow Fall Roof Overloading

Ash or snow accumulation causing actual roof or other structural damage to buildings containing hazardous material or radioactive/dangerous/mixed waste ~~is classified as an Alert Emergency~~requires classification per DOE-0223, *Emergency Plan Implementing Procedure,* Appendix 1-2.M. There should be ample warning of an approaching large ashfall to allow the facilities to be placed in a stable condition.

Modification Class: [1 2 3]	Class 1	Class[1]1	Class 2	Class 3
Please check one of the Classes:	X			

Relevant WAC 173-303-830, Appendix I Modification: A.1.

Enter wording of the modification from WAC 173-303-830, Appendix I citation

1. General Permit Provisions
   A. Administrative and Informational changes.

Submitted by Co-Operator:		Reviewed by RL Program Office:		Reviewed by Ecology:		Reviewed by Ecology:	
ESA	12/13/99						
E. S. Aromi	Date	R. F. Guercia	Date	R. J. Julian	Date	L.E. Ruud	Date

[1]Class 1 modifications requiring prior Agency approval.

[2] This is only an advanced notification of an intended Class [1]1, 2, or 3 modification, this should be followed with a formal modification request, and consequently implement the required Public Involvement processes when required.

[3] If the proposed modification does not match any modification listed in WAC 173-303-830 Appendix I, then the proposed modification should automatically be given a Class 3 status. This status may be maintained by the Department of Ecology, or down graded to [1]1, if appropriate.

Hanford Facility RCRA Permit Modification Notification Form

Unit: 242-A Evaporator	Permit Part & Chapter: Part III, Chapter 5 and Attachment 35

Description of Modification:

Appendix 7A, Section 6.2.3:

6.2.3 High Winds/Tornados

~~An Alert Emergency classification is suggested w~~ When sustained wind speeds in excess of 40 meters per second (90 miles per hour) are observed and cause degradation of the facility safety equipment/confinement barriers, emergency classification is made per DOE-0223, *Emergency Plan Implementing Procedure*, Appendix 1-2.M. An emergency classification upgrade could occur based on actual facility damage or release of hazardous materials,

Modification Class: [1 2 3]	Class 1	Class[1]1	Class 2	Class 3
Please check one of the Classes:	X			

Relevant WAC 173-303-830, Appendix I Modification: A.1.

Enter wording of the modification from WAC 173-303-830, Appendix I citation

1. General Permit Provisions
   A. Administrative and Informational changes.

Submitted by Co-Operator:		Reviewed by RL Program Office:		Reviewed by Ecology:		Reviewed by Ecology:	
12/13/99							
E. S. Aromi	Date	R. F. Guercia	Date	R. J. Julian	Date	L.E. Ruud	Date

DEC 27 1999

[1]Class 1 modifications requiring prior Agency approval.

[2] This is only an advanced notification of an intended Class [1]1, 2, or 3 modification, this should be followed with a formal modification request, and consequently implement the required Public Involvement processes when required.

[3] If the proposed modification does not match any modification listed in WAC 173-303-830 Appendix I, then the proposed modification should automatically be given a Class 3 status. This status may be maintained by the Department of Ecology, or down graded to [1]1, if appropriate.

Hanford Facility RCRA Permit Modification Notification Form

Unit:	Permit Part & Chapter:
242-A Evaporator	**Part III, Chapter 5 and Attachment 35**

Description of Modification:

Appendix 7A, Section 6.2.4:

6.2.4 Flood

A flood is not a credible accident at 242-A Evaporator because the facility is not within the Columbia River flood plain. ~~Emergency planning is not required.~~

Modification Class: [1 2 3]	Class 1	Class[1]1	Class 2	Class 3
Please check one of the Classes:	X			

Relevant WAC 173-303-830, Appendix I Modification: A.1.

Enter wording of the modification from WAC 173-303-830, Appendix I citation

1. General Permit Provisions
   A. Administrative and Informational changes.

Submitted by Co-Operator:		Reviewed by RL Program Office:		Reviewed by Ecology:		Reviewed by Ecology:	
E. S. Aromi	Date	R. F. Guercia	Date	R. J. Julian	Date	L.E. Ruud	Date

12/13/99

DEC 27 1999

[1]Class 1 modifications requiring prior Agency approval.

[2] This is only an advanced notification of an intended Class [1]1, 2, or 3 modification, this should be followed with a formal modification request, and consequently implement the required Public Involvement processes when required.

[3] If the proposed modification does not match any modification listed in WAC 173-303-830 Appendix I, then the proposed modification should automatically be given a Class 3 status. This status may be maintained by the Department of Ecology, or down graded to [1]1, if appropriate.

Hanford Facility RCRA Permit Modification Notification Form

Unit:	Permit Part & Chapter:
242-A Evaporator	**Part III, Chapter 5 and Attachment 35**

Description of Modification:

Appendix 7A, Section 6.2.5:

6.2.5 Range Fire

~~An Alert Emergency is suggested i~~In the event that a range fire threatens any 242-A Evaporator building containing hazardous material or radioactive/dangerous/mixed waste, emergency classification is made per DOE-0223, *Emergency Plan Implementing Procedure*, Appendix 1-2.M.

Modification Class: [1 2 3]	Class 1	Class[1]1	Class 2	Class 3
Please check one of the Classes:	X			

Relevant WAC 173-303-830, Appendix I Modification: A.1.

Enter wording of the modification from WAC 173-303-830, Appendix I citation

1. General Permit Provisions
   A. Administrative and Informational changes.

Submitted by Co-Operator:		Reviewed by RL Program Office:		Reviewed by Ecology:		Reviewed by Ecology:	
E. S. Aromi	Date	R. F. Guercia	Date	R. J. Julian	Date	L.E. Ruud	Date

DEC 27 1999

[1]Class 1 modifications requiring prior Agency approval.

[2] This is only an advanced notification of an intended Class [1]1, 2, or 3 modification, this should be followed with a formal modification request, and consequently implement the required Public Involvement processes when required.

[3] If the proposed modification does not match any modification listed in WAC 173-303-830 Appendix I, then the proposed modification should automatically be given a Class 3 status. This status may be maintained by the Department of Ecology, or down graded to [1]1, if appropriate.

Hanford Facility RCRA Permit Modification Notification Form

Unit:	Permit Part & Chapter:
242-A Evaporator	**Part III, Chapter 5 and Attachment 35**

Description of Modification:

Appendix 7A, Section 6.2.6:

6.2.6 Aircraft Crash

~~A Site Area Emergency classification is suggested i~~If an aircraft crash occurs into or near the 242-A Evaporator, emergency classification is made per DOE-0223, *Emergency Plan Implementing Procedure*, Appendix 1-2.M. An emergency classification upgrade could occur based on actual facility damage or release of hazardous material or radioactive/dangerous/mixed waste.

Modification Class: [1 2 3]	Class 1	Class[1]1	Class 2	Class 3
Please check one of the Classes:	X			

Relevant WAC 173-303-830, Appendix I Modification: A.1.

Enter wording of the modification from WAC 173-303-830, Appendix I citation

1. General Permit Provisions
   A. Administrative and Informational changes.

Submitted by Co-Operator:		Reviewed by RL Program Office:		Reviewed by Ecology:		Reviewed by Ecology:	
E. S. Aromi	Date 12/13/99	R. F. Guercia	Date DEC 27 1999	R. J. Julian	Date	L.E. Ruud	Date

[1]Class 1 modifications requiring prior Agency approval.

[2] This is only an advanced notification of an intended Class [1]1, 2, or 3 modification, this should be followed with a formal modification request, and consequently implement the required Public Involvement processes when required.

[3] If the proposed modification does not match any modification listed in WAC 173-303-830 Appendix I, then the proposed modification should automatically be given a Class 3 status. This status may be maintained by the Department of Ecology, or down graded to [1]1, if appropriate.

Hanford Facility RCRA Permit Modification Notification Form

Unit:	Permit Part & Chapter:
242-A Evaporator	**Part III, Chapter 5 and Attachment 35**

Description of Modification:

Appendix 7A, Section 6.3.1:

6.3.1 Bomb Threat/Suspicious Object

~~An Alert~~ Bomb threats may pose a fire or explosion hazard. Fire or explosion from a bomb could lead to the release of hazardous constituents or materials and exposure and bodily harm to personnel. Emergency classification ~~is required if there is a credible bomb threat or a confirmed explosive device located in the 242-A Building rooms housing hazardous chemicals and/or radioactive material,~~ will be made per DOE-0223, *Emergency Plan Implementing Procedure,* Appendix 1-2.M. If the device explodes, classification of the event will be performed as stated in Section 6.1.4.

Modification Class: [1 2 3]	Class 1	Class[1] 1	Class 2	Class 3
Please check one of the Classes:	X			

Relevant WAC 173-303-830, Appendix I Modification: A.1.

Enter wording of the modification from WAC 173-303-830, Appendix I citation

1. General Permit Provisions
   A. Administrative and Informational changes.

Submitted by Co-Operator:		Reviewed by RL Program Office:		Reviewed by Ecology:		Reviewed by Ecology:	
E. S. Aromi	Date	R. F. Guercia	Date	R. J. Julian	Date	L.E. Ruud	Date

DEC 27 1999

[1]Class 1 modifications requiring prior Agency approval.

[2] This is only an advanced notification of an intended Class [1]1, 2, or 3 modification, this should be followed with a formal modification request, and consequently implement the required Public Involvement processes when required.

[3] If the proposed modification does not match any modification listed in WAC 173-303-830 Appendix I, then the proposed modification should automatically be given a Class 3 status. This status may be maintained by the Department of Ecology, or down graded to [1]1, if appropriate.

Hanford Facility RCRA Permit Modification Notification Form

Unit:	Permit Part & Chapter:
242-A Evaporator	**Part III, Chapter 5 and Attachment 35**

Description of Modification:

Appendix 7A, Section 6.3.2:

6.3.2 Hostage Situation/Armed Intruder

A hostage situation or armed intruder(s) at the 242-A Evaporator ~~requires an Alert Emergency~~ results in emergency classification per DOE-0223, *Emergency Plan Implementing Procedure*, Appendix 1-2.M. An emergency classification upgrade could occur based on actual facility damage or release of hazardous material or radioactive/dangerous/mixed waste.

Modification Class: [1 2 3]	Class 1	Class[1]1	Class 2	Class 3
Please check one of the Classes:	X			

Relevant WAC 173-303-830, Appendix I Modification: A.1.

Enter wording of the modification from WAC 173-303-830, Appendix I citation

1. General Permit Provisions
   A. Administrative and Informational changes.

Submitted by Co-Operator:		Reviewed by RL Program Office:		Reviewed by Ecology:		Reviewed by Ecology:	
12/13/99							
E. S. Aromi	Date	R. F. Guerciaco	Date	R. J. Julian	Date	L.E. Ruud	Date

DEC 2 1 1999

[1]Class 1 modifications requiring prior Agency approval.

[2] This is only an advanced notification of an intended Class [1]1, 2, or 3 modification, this should be followed with a formal modification request, and consequently implement the required Public Involvement processes when required.

[3] If the proposed modification does not match any modification listed in WAC 173-303-830 Appendix I, then the proposed modification should automatically be given a Class 3 status. This status may be maintained by the Department of Ecology, or down graded to [1]1, if appropriate.

Hanford Facility RCRA Permit Modification Notification Form

Unit: 242-A Evaporator	Permit Part & Chapter: Part III, Chapter 5 and Attachment 35

Description of Modification:

Appendix 7A, Section 7.0:

7.0 INCIDENT RESPONSE

The initial response to any emergency is to immediately protect the health and safety of persons in the immediate area. Identification of released material is essential to determine appropriate protective actions. Containment, event notifications, treatment, and disposal assessment are secondary responses.

Modification Class: [1 2 3]	Class 1	Class[1]1	Class 2	Class 3
Please check one of the Classes:	X			

Relevant WAC 173-303-830, Appendix I Modification: A.1.

Enter wording of the modification from WAC 173-303-830, Appendix I citation

1. General Permit Provisions
   A. Administrative and Informational changes.

Submitted by Co-Operator:		Reviewed by RL Program Office:		Reviewed by Ecology:		Reviewed by Ecology:	
E. S. Aromi	Date 12/13/99	R. F. Guercia	Date DEC 2 1 1999	R. J. Julian	Date	L.E. Ruud	Date

[1]Class 1 modifications requiring prior Agency approval.

[2] This is only an advanced notification of an intended Class [1]1, 2, or 3 modification, this should be followed with a formal modification request, and consequently implement the required Public Involvement processes when required.

[3] If the proposed modification does not match any modification listed in WAC 173-303-830 Appendix I, then the proposed modification should automatically be given a Class 3 status. This status may be maintained by the Department of Ecology, or down graded to [1]1, if appropriate.

Hanford Facility RCRA Permit Modification Notification Form

Unit:	Permit Part & Chapter:
242-A Evaporator	**Part III, Chapter 5 and Attachment 35**

Description of Modification:

Appendix 7A, Section 7.1.2:

7.2 Response to Operationals Emergencies

Operational activities to isolate, contain, and mitigate the event can be performed in parallel with classification and protective action implementation. The responses are structured to allow parallel activity with clearly established priorities. The division of actions and workload between various personnel is such that coordinated team responses result in the successful implementation of both emergency operating actions and emergency planning requirements. Specific event mitigation strategy for each type of accident is provided in the following sections.

Modification Class: [1 2 3]	Class 1	Class[1]1	Class 2	Class 3
Please check one of the Classes:	X			

Relevant WAC 173-303-830, Appendix I Modification: A.1.

Enter wording of the modification from WAC 173-303-830, Appendix I citation

1. General Permit Provisions
   A. Administrative and Informational changes.

Submitted by Co-Operator:		Reviewed by RL Program Office:		Reviewed by Ecology:		Reviewed by Ecology:	
E. S. Aromi	12/13/99 Date	R. F. Guercia	Date DEC 2 7 1999	R. J. Julian	Date	L.E. Ruud	Date

[1]Class 1 modifications requiring prior Agency approval.

[2] This is only an advanced notification of an intended Class [1]1, 2, or 3 modification, this should be followed with a formal modification request, and consequently implement the required Public Involvement processes when required.

[3] If the proposed modification does not match any modification listed in WAC 173-303-830 Appendix I, then the proposed modification should automatically be given a Class 3 status. This status may be maintained by the Department of Ecology, or down graded to [1]1, if appropriate.

Hanford Facility RCRA Permit Modification Notification Form

Unit: 242-A Evaporator	Permit Part & Chapter: Part III, Chapter 5 and Attachment 35

Description of Modification:

Appendix 7A, Section 7.2.1.1:

7.2.1.1 Loss of Electrical Power

Should there be a loss of electrical power to the 242-A Evaporator, all personnel are evacuated from radiation areas due to the potential loss of radiation monitoring equipment (i.e., continuous air monitors, area radiation monitors). In addition, all non-essential personnel leave the facility. Access into the radiation and adjacent areas is restricted to response personnel who are properly clothed and equipped. Radiation monitoring by radiological control personnel is established, and facility operations are properly shutdown to a safe configuration.

If back-up power is not automatically placed in service, the diesel powered standby generator is manually placed in service. Operation of the Backup K1 Ventilation system exhaust fan is checked and, if not operating, actions are taken to start the fan (K1-5-2), ~~to restart the normal fan,~~ or to secure the confinement area. If an exhaust fan is operating, verification is made that the exhaust stack radiation monitor is returned to service.

If the evaporator is in operation mode and a dump of C-A-1 vessel does occur, AW Tank Farm personnel are notified of impending pressurization of DST system tank 241-AW-102.~~, and all personnel in the AW Tank Farm evacuate to the change trailer.~~ The 200 East Area Tank Farms Shift Manager is notified of the event as is the 242-A Evaporator plant management.

All implementing actions executed by the aides/managers are directed by the emergency response procedures in Attachment A.

Modification Class: [1 2 3]	Class 1	Class[1]1	Class 2	Class 3
Please check one of the Classes:	X			

Relevant WAC 173-303-830, Appendix I Modification: A.1.

Enter wording of the modification from WAC 173-303-830, Appendix I citation

1. General Permit Provisions
   A. Administrative and Informational changes.

Submitted by Co-Operator:		Reviewed by RL Program Office:		Reviewed by Ecology:		Reviewed by Ecology:	
E. S. Aromi	12/13/99 Date	R. F. Guercia	Date	R. J. Julian	Date	L.E. Ruud	Date

DEC 27 1999

[1]Class 1 modifications requiring prior Agency approval.

[2] This is only an advanced notification of an intended Class [1]1, 2, or 3 modification, this should be followed with a formal modification request, and consequently implement the required Public Involvement processes when required.

[3] If the proposed modification does not match any modification listed in WAC 173-303-830 Appendix I, then the proposed modification should automatically be given a Class 3 status. This status may be maintained by the Department of Ecology, or down graded to [1]1, if appropriate.

Hanford Facility RCRA Permit Modification Notification Form

Unit:	Permit Part & Chapter:
242-A Evaporator	**Part III, Chapter 5 and Attachment 35**

Description of Modification:

Appendix 7A, Section 7.2.1.2.:

7.2.1.2. Loss of Compressed Air

Upon loss of the compressed air at the 242-A Evaporator, restoration of the air supply system is immediately attempted. If this fails, non-essential personnel are notified to exit the facility. Automatic dumping of the C-A-1 vessel is stopped; the vessel could dump later when air pressure that holds the drain valve fails open. If a dump of C-A-1 vessel does occur, AW Tank Farm personnel are notified of impending pressurization of DST system tank 241-AW-102~~, and all personnel in the AW Tank Farm evacuate to the change trailer.~~

Plant conditions are monitored as components fail and shutdown interlocks activate, and the facility is placed into a safe shutdown condition. The K1 ventilation system is monitored for potential failure due to loss of damper control (caused by loss of air supply), and plant management is notified of the facility condition. A backup air compressor is placed in service as soon as possible.

Modification Class: [1 2 3]	Class 1	Class[1]1	Class 2	Class 3
Please check one of the Classes:	X			

Relevant WAC 173-303-830, Appendix I Modification: A.1.

Enter wording of the modification from WAC 173-303-830, Appendix I citation

1. General Permit Provisions
   A. Administrative and Informational changes.

Submitted by Co-Operator:	Reviewed by RL Program Office:	Reviewed by Ecology:	Reviewed by Ecology:
12/13/99	DEC 27 1999		
E. S. Aromi Date	R. F. Guercia Date	R. J. Julian Date	L.E. Ruud Date

[1]Class 1 modifications requiring prior Agency approval.

[2] This is only an advanced notification of an intended Class [1]1, 2, or 3 modification, this should be followed with a formal modification request, and consequently implement the required Public Involvement processes when required.

[3] If the proposed modification does not match any modification listed in WAC 173-303-830 Appendix I, then the proposed modification should automatically be given a Class 3 status. This status may be maintained by the Department of Ecology, or down graded to [1]1, if appropriate.

Hanford Facility RCRA Permit Modification Notification Form

Unit: 242-A Evaporator	Permit Part & Chapter: **Part III, Chapter 5 and Attachment 35**

Description of Modification:

Appendix 7A, Section 7.2.1.3.:

7.2.1.3. Loss of Raw Water

On loss of the raw water system, 242-A Evaporator personnel are immediately notified, and non-essential personnel are directed to leave the facility. Essential personnel are directed to the 242-A Evaporator control room for support as required. The P-B-1 and P-B-2 pumps are shutdown to prevent damage to the mechanical seals. If seal water is being supplied by the process condensate system, pump operation may continue through a controlled shutdown. The compressors are placed on sanitary water cooling. If air compressor failure occurs due to loss of cooling water, the automatic dumping of the C-A-1 vessel is terminated; the vessel could dump later when air pressure that holds the drain valve fails open. If a dump of C-A-1 vessel does occur, AW Tank Farm personnel are notified of impending over-pressurization of DST system tank 241-AW-102; ~~and all personnel in the AW Tank Farm evacuate to the change trailer.~~ The 200 East Area Tank Farms Shift Manager is notified of the facility condition.

Facility operations are properly shutdown, and plant management is notified of the facility condition.

Modification Class: [1 2 3]	Class 1	Class[1]1	Class 2	Class 3
Please check one of the Classes:	X			

Relevant WAC 173-303-830, Appendix I Modification: A.1.

Enter wording of the modification from WAC 173-303-830, Appendix I citation

1. General Permit Provisions
   A. Administrative and Informational changes.

Submitted by Co-Operator:		Reviewed by RL Program Office:		Reviewed by Ecology:		Reviewed by Ecology:	
ESA 12/13/99		RF Guercia DEC 27 1999					
E. S. Aromi	Date	R. F. Guercia	Date	R. J. Julian	Date	L.E. Ruud	Date

[1]Class 1 modifications requiring prior Agency approval.

[2] This is only an advanced notification of an intended Class [1]1, 2, or 3 modification, this should be followed with a formal modification request, and consequently implement the required Public Involvement processes when required.

[3] If the proposed modification does not match any modification listed in WAC 173-303-830 Appendix I, then the proposed modification should automatically be given a Class 3 status. This status may be maintained by the Department of Ecology, or down graded to [1]1, if appropriate.

Hanford Facility RCRA Permit Modification Notification Form

Unit:	Permit Part & Chapter:
242-A Evaporator	**Part III, Chapter 5 and Attachment 35**

Description of Modification:

Appendix 7A, Section 7.2.1.5.:

7.2.1.5. Loss of K1 Ventilation System

On loss of the K1 ventilation system, restoration of the primary or backup K1 ventilation exhaust fan is immediately attempted. If the K1 ventilation system cannot be restored immediately, personnel are notified to exit contaminated areas, and non-essential personnel are directed to exit the facility. Essential personnel report to the 242-A control room for support as required. Continued adequate contamination control is ensured by having the K2 ventilation system operating. The K2 ventilation system maintains positive pressure in non-contaminated areas. If the primary and backup K1 ventilation system exhaust fans are not running, actions are taken to shutdown the facility and ~~tape up contamination area entrances~~restrict access to contamination areas. Plant management is notified of facility conditions.

Modification Class: [1 2 3]	Class 1	Class[1]1	Class 2	Class 3
Please check one of the Classes:	X			

Relevant WAC 173-303-830, Appendix I Modification: A.1.

Enter wording of the modification from WAC 173-303-830, Appendix I citation

1. General Permit Provisions
   A. Administrative and Informational changes.

Submitted by Co-Operator:		Reviewed by RL Program Office:		Reviewed by Ecology:		Reviewed by Ecology:	
E. S. Aromi	Date	R. F. Guercia	Date	R. J. Julian	Date	L.E. Ruud	Date

DEC 27 1999

[1]Class 1 modifications requiring prior Agency approval.

[2] This is only an advanced notification of an intended Class [1]1, 2, or 3 modification, this should be followed with a formal modification request, and consequently implement the required Public Involvement processes when required.

[3] If the proposed modification does not match any modification listed in WAC 173-303-830 Appendix I, then the proposed modification should automatically be given a Class 3 status. This status may be maintained by the Department of Ecology, or down graded to [1]1, if appropriate.

Hanford Facility RCRA Permit Modification Notification Form

Unit:	Permit Part & Chapter:
242-A Evaporator	**Part III, Chapter 5 and Attachment 35**

Description of Modification:

Appendix 7A, Section 7.2.2.:

7.2.2. Major Process Disruption/Loss of Plant Control

Upon loss of the MCS, the 242-A Evaporator Shift Operations Manager is notified while an attempt is made to return the MCS to service. If a dump of C-A-1 vessel does occur, AW Tank Farm personnel are notified of impending over-pressurization of DST system tank 241-AW-102.~~, and all personnel in the AW Tank Farm evacuate to the change trailer.~~ Non-essential personnel exit the 242-A Evaporator facility.

Modification Class: [1 2 3]	Class 1	Class[1]1	Class 2	Class 3
Please check one of the Classes:	X			

Relevant WAC 173-303-830, Appendix I Modification: A.1.

Enter wording of the modification from WAC 173-303-830, Appendix I citation

1. General Permit Provisions
   A. Administrative and Informational changes.

Submitted by Co-Operator:		Reviewed by RL Program Office:		Reviewed by Ecology:		Reviewed by Ecology:	
12/13/99							
E. S. Aromi	Date	R. F. Guercia	Date	R. J. Julian	Date	L.E. Ruud	Date

DEC 27 1999

[1]Class 1 modifications requiring prior Agency approval.

[2] This is only an advanced notification of an intended Class [1]1, 2, or 3 modification, this should be followed with a formal modification request, and consequently implement the required Public Involvement processes when required.

[3] If the proposed modification does not match any modification listed in WAC 173-303-830 Appendix I, then the proposed modification should automatically be given a Class 3 status. This status may be maintained by the Department of Ecology, or down graded to [1]1, if appropriate.

Hanford Facility RCRA Permit Modification Notification Form

Unit:	Permit Part & Chapter:
242-A Evaporator	**Part III, Chapter 5 and Attachment 35**

Description of Modification:

Appendix 7A, Section 7.2.4.:

7.2.4. Fire and/or Explosion

On becoming aware of a fire and/or explosion, the discoverer notifies personnel (if any) in the immediate area and directs them to a safe location. The discoverer then activates the nearest fire alarm pull station, contacts 911 to request fire fighting assistance, and contacts the 242-A Evaporator control room to report the fire. As soon as non-essential personnel are notified of a fire (verbally or by fire alarm activation), they immediately exit the facility to a safe upwind location, account for their personnel, and follow the instructions of responding personnel. If personnel are reported as missing, and might be within the facility, the Hanford Fire Department conducts a search.

The BED is notified and initiates activation of the incident ~~event~~ command post and resources.

Operations personnel initiate a plant shutdown with the method (controlled or emergency) depending on the location and severity of the fire and the location and type of hazards in the affected area. A controlled shutdown is performed unless it is unsafe to remain in the control room. An emergency shutdown is performed if the control room must be evacuated. The ~~Shift Operations Manager~~ Building Emergency Director interfaces with the Hanford Fire Department and provides the following:

a. Location and health of personnel, including missing personnel and possible locations for fire fighters to search.
b. Location and severity of fire.
c. Known hazardous (radiological and nonradiological) conditions.
d. Facility operating status.
e. Utility systems status.
f. Support by radiological control personnel (i.e., monitoring, surveys, sampling, decontamination).
g. Facility layout, and facility known hazardous conditions, (i.e., electrical, thermal, flammable materials, pressurized cylinders, toxic gas, pressure systems, batteries, radiation areas, etc.).
h. Support for fire fighter activities as required.

Once the fire is extinguished, the Shift Operations Manager/BED ensures administrative restrictions are implemented to protect the facility, the workers, and the environment. The Shift Operations Manager/BED makes notifications as required and assists with recovery actions.

An incident requiring evacuation of personnel or the summoning of emergency response units does not necessarily indicate that the contingency plan has been implemented.

Modification Class: [1 2 3]	Class 1	Class[1] 1	Class 2	Class 3
Please check one of the Classes:	X			

Relevant WAC 173-303-830, Appendix I Modification: A.1.

Enter wording of the modification from WAC 173-303-830, Appendix I citation

1. General Permit Provisions
   A. Administrative and Informational changes.

Submitted by Co-Operator:		Reviewed by RL Program Office:		Reviewed by Ecology:		Reviewed by Ecology:	
E. S. Aromi	Date 12/13/99	R. F. Guercia	Date DEC 27 1999	R. J. Julian	Date	L.E. Ruud	Date

[1]Class 1 modifications requiring prior Agency approval.

[2] This is only an advanced notification of an intended Class [1]1, 2, or 3 modification, this should be followed with a formal modification request, and consequently implement the required Public Involvement processes when required.

[3] If the proposed modification does not match any modification listed in WAC 173-303-830 Appendix I, then the proposed modification should automatically be given a Class 3 status. This status may be maintained by the Department of Ecology, or down graded to [1]1, if appropriate.

Hanford Facility RCRA Permit Modification Notification Form

Unit:	Permit Part & Chapter:
242-A Evaporator	**Part III, Chapter 5 and Attachment 35**

Description of Modification:

Appendix 7A, Section 7.2.5.:

7.2.5. Hazardous Material, Dangerous and/or Mixed Waste Spills or Releases

The 242A Evaporator has engineering controls to contain or minimize spills. These controls include containment berms, dedicated spill control sumps, remote gauges and level indicators as well as spray shields on chemical pipe flanges. The 242A Evaporator procedures provide alarm response and maintenance actions for leak detection equipment, surveillance of possible leak locations, and response actions for detected spills.

Spills can result from many sources, including process leaks, container spills, or leaks, damaged packages, or shipments, or personnel error. Spills of mixed waste are complicated by the need to deal with the extra hazard induced by the presence of radioactive materials.

If a spill or release is discovered, the discoverer performs the following actions:

1. Notifies the 242-A Evaporator control room and evacuates to a safe area
2. Remains available for consultation with the BED, Hanford Fire Department, or other emergency response personnel.

The control room operator performs the following actions:

1. Uses the public address system to notify the facility occupants of the event
2. Notifies the BED/HFD and relays information received from the event scene
3. Places the facility in a safe condition
4. Remains available to support further notification and response activities

The BED performs or arranges for personnel to perform the following actions:

1. Coordinates response activity and establishes a command post at a safe location
2. Obtains all available information pertaining to the incident and determines if the spill or release warrants implementation of the contingency plan in accordance with Sections 4.0, 6.1.5, and 6.1.8. In the case of ammonia releases, described in Section 6.1.5, this information includes monitoring stack ammonia concentrations.
3. Determines need for assistance from outside agencies and arranges for their mobilization and response
4. Initiates the appropriate announcements, if building or area evacuations are necessary
5. Arranges for care of any injured persons
6. Requests activation of the affected area emergency sirens/crash alarm system if a threat to surrounding facilities
7. Provides for event notification
8. Maintains access control at the incident site by keeping unauthorized personnel and vehicles away from the area. Security personnel can be used to assist in site control if control of the boundary is difficult. In determining controlled access areas, considers environmental factors such as wind speed and direction
9. Arranges for proper remediation of the incident after evaluation
10. Remains available for HFD, Hanford Patrol, and other authorities on the scene and provide all required information
11. Enlists the assistance of alternate BED(s), if around-the-clock work is anticipated
12. ~~Refers media inquiries to the Media Relations/Communications offices of the contractors or DOE-RL.~~
13. Ensures the use of proper protective equipment, remedial techniques (including ignition source control for flammable spills), and decontamination procedures by all involved personnel, if remediation is performed by 242-A Evaporator personnel
14. Remains at the ~~event~~ incident command post to oversee activities and to provide information, if remediation is performed by the HFD Hazardous Materials Response Team or other response teams
15. Ensures proper containerization, packaging, and labeling of recovered spill materials and overpack containers
16. Ensures decontamination (or restocking) and restoration of emergency equipment used in the spill remediation before resuming operations
17. Provides required reports after the incident.

Modification Class: [1 2 3]	Class 1	Class[1]1	Class 2	Class 3
Please check one of the Classes:	X			

Relevant WAC 173-303-830, Appendix I Modification: A.1.

Enter wording of the modification from WAC 173-303-830, Appendix I citation

1. General Permit Provisions
   A. Administrative and Informational changes.

Submitted by Co-Operator:		Reviewed by RL Program Office:		Reviewed by Ecology:		Reviewed by Ecology:	
E. S. Aromi	Date	R. F. Guercia	Date	R. J. Julian	Date	L.E. Ruud	Date

DEC 27 1999

[1]Class 1 modifications requiring prior Agency approval.

[2] This is only an advanced notification of an intended Class [1]1, 2, or 3 modification, this should be followed with a formal modification request, and consequently implement the required Public Involvement processes when required.

[3] If the proposed modification does not match any modification listed in WAC 173-303-830 Appendix I, then the proposed modification should automatically be given a Class 3 status. This status may be maintained by the Department of Ecology, or down graded to [1]1, if appropriate.

Hanford Facility RCRA Permit Modification Notification Form

Unit: 242-A Evaporator	Permit Part & Chapter: Part III, Chapter 5 and Attachment 35

Description of Modification:

Appendix 7A, Section 7.2.6.2.:

7.2.6.2. Release of Mixed Waste into Facility

If a catastrophic dumping of mixed waste from vapor-liquid separator C-A-1 occurs, the facility is immediately shutdown. AW Tank Farm personnel are notified of impending over-pressurization of DST system tank 241-AW-102~~, and all personnel in the AW Tank Farm evacuate to the change trailer.~~ The 200 East Area Tank Farms Shift Manager is notified of facility condition. The actions in Section 7.2.5 are then performed.

If a catastrophic dumping of the vapor-liquid separator causes high radiation alarm on the K1 ventilation system, the actions described in Section 7.2.6.1 are performed.

Modification Class: [1 2 3]	Class 1	Class[1]1	Class 2	Class 3
Please check one of the Classes:	X			

Relevant WAC 173-303-830, Appendix I Modification: A.1.

Enter wording of the modification from WAC 173-303-830, Appendix I citation

1. General Permit Provisions
   A. Administrative and Informational changes.

Submitted by Co-Operator:		Reviewed by RL/Program Office:		Reviewed by Ecology:		Reviewed by Ecology:	
ESA	12/13/99						
E. S. Aromi	Date	R. F. Guercia	Date	R. J. Julian	Date	L.E. Ruud	Date

[1]Class 1 modifications requiring prior Agency approval.

[2] This is only an advanced notification of an intended Class [1]1, 2, or 3 modification, this should be followed with a formal modification request, and consequently implement the required Public Involvement processes when required.

[3] If the proposed modification does not match any modification listed in WAC 173-303-830 Appendix I, then the proposed modification should automatically be given a Class 3 status. This status may be maintained by the Department of Ecology, or down graded to [1]1, if appropriate.

Hanford Facility RCRA Permit Modification Notification Form

Unit:	Permit Part & Chapter:
242-A Evaporator	**Part III, Chapter 5 and Attachment 35**

Description of Modification:

Appendix 7A, Section 7.2.7:

7.2.7 Criticality

A criticality is not a credible accident at the 242-A Evaporator. ~~Emergency planning is not required.~~

Modification Class: [1 2 3]	Class 1	Class[1]1	Class 2	Class 3
Please check one of the Classes:	X			

Relevant WAC 173-303-830, Appendix I Modification: A.1.

Enter wording of the modification from WAC 173-303-830, Appendix I citation

1. General Permit Provisions
   A. Administrative and Informational changes.

Submitted by Co-Operator:		Reviewed by RL Program Office:		Reviewed by Ecology:		Reviewed by Ecology:	
E. S. Aromi	12/17/99 Date	R. F. Guercia	Date	R. J. Julian	Date	L.E. Ruud	Date

DEC

[1]Class 1 modifications requiring prior Agency approval.

[2] This is only an advanced notification of an intended Class [1]1, 2, or 3 modification, this should be followed with a formal modification request, and consequently implement the required Public Involvement processes when required.

[3] If the proposed modification does not match any modification listed in WAC 173-303-830 Appendix I, then the proposed modification should automatically be given a Class 3 status. This status may be maintained by the Department of Ecology, or down graded to [1]1, if appropriate.

Hanford Facility RCRA Permit Modification Notification Form

Unit:	Permit Part & Chapter:
242-A Evaporator	**Part III, Chapter 5 and Attachment 35**

Description of Modification:

Appendix 7A, Section 7.4.1.:

7.4.1. Seismic Event

The Hanford Site emergency response organization's primary role in a seismic event is coordinating the initial response to injuries, fires, and fire hazards, and acting to contain or control radioactive and/or hazardous material releases.

Individuals should remain calm and stay away from windows, steam lines, and hazardous material storage locations. Once the shaking has subsided, individuals evacuate carefully and assist personnel needing help. The locations of any trapped individuals are reported to the BED or are reported to 911 or 373-3800.

The BED takes whatever actions are necessary to minimize damage and personnel injuries, including:

- Coordinating searches for personnel and potential hazardous conditions (fires, spills, etc.),
- Conducting personnel accountability,
- Securing utilities and facility operations,
- Arranging for rescue efforts, and notifying 911 or 373-3800 for assistance,
- Determining if hazardous materials were released,
- Determining current local meteorological conditions,
- Warning other facilities and implementing protective actions if release of hazardous materials poses a danger,
- Providing personnel and resource assistance to other facilities.

Modification Class: [1 2 3]	Class 1	Class[1]1	Class 2	Class 3
Please check one of the Classes:	X			

Relevant WAC 173-303-830, Appendix I Modification: A.1.

Enter wording of the modification from WAC 173-303-830, Appendix I citation

1. General Permit Provisions
   A. Administrative and Informational changes.

Submitted by Co-Operator:		Reviewed by RL Program Office:		Reviewed by Ecology:		Reviewed by Ecology:	
E. S. Aromi	Date 12/13/99	R. F. Guercia	Date DEC 27 1999	R. J. Julian	Date	L.E. Ruud	Date

[1]Class 1 modifications requiring prior Agency approval.

[2] This is only an advanced notification of an intended Class [1]1, 2, or 3 modification, this should be followed with a formal modification request, and consequently implement the required Public Involvement processes when required.

[3] If the proposed modification does not match any modification listed in WAC 173-303-830 Appendix I, then the proposed modification should automatically be given a Class 3 status. This status may be maintained by the Department of Ecology, or down graded to [1]1, if appropriate.

Hanford Facility RCRA Permit Modification Notification Form

Unit:	Permit Part & Chapter:
242-A Evaporator	**Part III, Chapter 5 and Attachment 35**

Description of Modification:

Appendix 7A, Section 7.4.4.:

7.4.4 Flood

Flooding of the 242-A Evaporator is not credible. ~~No emergency planning response is required~~.

Modification Class: [1 2 3]	Class 1	Class[1]1	Class 2	Class 3
Please check one of the Classes:	X			

Relevant WAC 173-303-830, Appendix I Modification: A.1.

Enter wording of the modification from WAC 173-303-830, Appendix I citation

1. General Permit Provisions
   A. Administrative and Informational changes.

Submitted by Co-Operator:		Reviewed by RL Program Office:		Reviewed by Ecology:		Reviewed by Ecology:	
E. S. Aromi	Date 12/13/99	R. F. Guercia	Date DEC 27 1999	R. J. Julian	Date	L.E. Ruud	Date

[1]Class 1 modifications requiring prior Agency approval.

[2] This is only an advanced notification of an intended Class [1]1, 2, or 3 modification, this should be followed with a formal modification request, and consequently implement the required Public Involvement processes when required.

[3] If the proposed modification does not match any modification listed in WAC 173-303-830 Appendix I, then the proposed modification should automatically be given a Class 3 status. This status may be maintained by the Department of Ecology, or down graded to [1]1, if appropriate.

Hanford Facility RCRA Permit Modification Notification Form

Unit:	Permit Part & Chapter:
242-A Evaporator	**Part III, Chapter 5 and Attachment 35**

Description of Modification:

Appendix 7A, Section 7.5.3:

7.5.3 Suspicious Object

The discoverer of a suspicious object reports it to the BED and to the POC via 911 or ~~373-3080~~, 373-3800 and, if possible, ensures that the object is not disturbed.

The BED orders evacuation of the facility and (based on the description provided by the discoverer) attempts to determine the identity or owner of the object. This may be done by questioning facility personnel at the staging area.

If the identity/ownership of the object cannot be determined, then Security assumes command of the incident. The canine unit is used to determine if the package contains explosives. If there is a positive indication of explosives or it cannot be assured that there are no explosives, then the Richland Police Department's Emergency Ordinance Disposal Team is dispatched to the facility to properly dispose of the device.

Modification Class: [1,2,3]	Class 1	Class[1]1	Class 2	Class 3
Please check one of the Classes:	X			

Relevant WAC 173-303-830, Appendix I Modification: A.1.

Enter wording of the modification from WAC 173-303-830, Appendix I citation

1. General Permit Provisions
   A. Administrative and Informational changes.

Submitted by Co-Operator:		Reviewed by RL Program Office:		Reviewed by Ecology:		Reviewed by Ecology:	
ESA	12/13/99						
E. S. Aromi	Date	R. F. Guercia	Date	R. J. Julian	Date	L.E. Ruud	Date

DEC 27 1999

[1]Class 1 modifications requiring prior Agency approval.

[2] This is only an advanced notification of an intended Class [1]1, 2, or 3 modification, this should be followed with a formal modification request, and consequently implement the required Public Involvement processes when required.

[3] If the proposed modification does not match any modification listed in WAC 173-303-830 Appendix I, then the proposed modification should automatically be given a Class 3 status. This status may be maintained by the Department of Ecology, or down graded to [1]1, if appropriate.

Hanford Facility RCRA Permit Modification Notification Form

Unit:	Permit Part & Chapter:
242-A Evaporator	**Part III, Chapter 5 and Attachment 35**

Description of Modification:

Appendix 7A, Section 8.0:

8.0 TERMINATION OF EVENT, INCIDENT RECOVERY, AND RESTART OF OPERATIONS

The DOE/RL-94-02, *Hanford Emergency ~~Response~~ Management Plan*, Section ~~8~~ 9.0, describes these considerations. The extent by which these actions are employed is based upon the incident classification of each event. In addition, DOE/RL-94-02 contains considerations for the management of incompatible wastes, which may apply.

Modification Class: [1 2 3]	Class 1	Class[1] 1	Class 2	Class 3
Please check one of the Classes:	X			

Relevant WAC 173-303-830, Appendix I Modification: A.1.

Enter wording of the modification from WAC 173-303-830, Appendix I citation

1. General Permit Provisions
   A. Administrative and Informational changes.

Submitted by Co-Operator:		Reviewed by RL Program Office:		Reviewed by Ecology:		Reviewed by Ecology:	
ESA	12/13/99						
E. S. Aromi	Date	R. F. Guercia	Date	R. J. Julian	Date	L.E. Ruud	Date

DEC 27 1999

[1]Class 1 modifications requiring prior Agency approval.

[2] This is only an advanced notification of an intended Class [1]1, 2, or 3 modification, this should be followed with a formal modification request, and consequently implement the required Public Involvement processes when required.

[3] If the proposed modification does not match any modification listed in WAC 173-303-830 Appendix I, then the proposed modification should automatically be given a Class 3 status. This status may be maintained by the Department of Ecology, or down graded to [1]1, if appropriate.

Hanford Facility RCRA Permit Modification Notification Form

Unit: 242-A Evaporator	Permit Part & Chapter: Part III, Chapter 5 and Attachment 35

Description of Modification:

Appendix 7A, Section 8.2:

8.2 Incident Recovery and Restart of Operations

A recovery plan is developed when necessary. A recovery plan is needed following an event where further risk could be introduced to personnel, the facility, or the environment through recovery action and/or to maximize the preservation of evidence. Depending on the magnitude of the event and the effort required to recover from the event, recovery planning may involve personnel from DOE-RL and other contractors. If a recovery plan is required, it is reviewed by appropriate personnel and approved by a Recovery Manager before restart. Restart of operations is performed in accordance with the approved plan.

If this plan is to be implemented for a WAC emergency (see Section 4.0), the Washington State Department of Ecology is notified before operations can resume. The DOE/RL-94-02, *Hanford Emergency ~~Response~~ Management Plan*, Section ~~6~~5.1 discusses different reports to outside agencies. This notification is in addition to other required reports and includes information documenting the following conditions:

1. There are no incompatibility issues with the waste and released materials from the incident.
2. All the equipment has been clean, fit for its intended use, and placed back into service. The notification may be made via telephone conference. Additional information that Ecology requests regarding these restart conditions will be included in the required 15-day report identified in WAC 173-303-360(2)(k).

For emergencies not involving activation of the RL-EOC, the BED ensures that conditions are restored to normal before operations are resumed. If the Hanford Site Emergency Organization was activated and the emergency phase is complete, a special recovery organization could be appointed at the discretion of DOE-RL to restore conditions to normal. This process is detailed in DOE-RL and contractor emergency procedures. The makeup of this organization depends on the extent of the damage and its effects. The onsite recovery organization is appointed by the appropriate contractor's management.

Modification Class: [1 2 3]	Class 1	Class[1] 1	Class 2	Class 3
Please check one of the Classes:	X			

Relevant WAC 173-303-830, Appendix I Modification: A.1.

Enter wording of the modification from WAC 173-303-830, Appendix I citation

1. General Permit Provisions
   A. Administrative and Informational changes.

Submitted by Co-Operator:		Reviewed by RL Program Office:		Reviewed by Ecology:		Reviewed by Ecology:	
ESA	12/13/99						
E. S. Aromi	Date	R. F. Guercia	Date	R. J. Julian	Date	L.E. Ruud	Date

DEC 27 1999

[1]Class 1 modifications requiring prior Agency approval.

[2] This is only an advanced notification of an intended Class [1]1, 2, or 3 modification, this should be followed with a formal modification request, and consequently implement the required Public Involvement processes when required.

[3] If the proposed modification does not match any modification listed in WAC 173-303-830 Appendix I, then the proposed modification should automatically be given a Class 3 status. This status may be maintained by the Department of Ecology, or down graded to [1]1, if appropriate.

Hanford Facility RCRA Permit Modification Notification Form

Unit:	Permit Part & Chapter:
242-A Evaporator	**Part III, Chapter 5 and Attachment 35**

Description of Modification:

Appendix 7A, Section 8.3:

8.3 Incompatible Waste

After an event, the BED or the onsite recovery organization ensures that no waste that might be incompatible with the released material is treated, stored, and/or disposed of until cleanup is completed. Cleanup actions are taken by facility personnel or other assigned personnel. DOE/RL-94-02, Section ~~8.3~~9.2, describes actions to be taken.

Waste from cleanup activities is designated and managed as newly generated waste. A field check for compatibility before storage is performed as necessary. Incompatible wastes are not placed in the same container. Containers of waste are placed in storage areas appropriate for their compatibility class.

If incompatibility of wastes was a factor in the incident, the BED or the onsite recovery organization ensures that the cause is corrected.

Modification Class: [1 2 3]	Class 1	Class[1]1	Class 2	Class 3
Please check one of the Classes:	X			

Relevant WAC 173-303-830, Appendix I Modification: A.1.

Enter wording of the modification from WAC 173-303-830, Appendix I citation

1. General Permit Provisions
   A. Administrative and Informational changes.

Submitted by Co-Operator:		Reviewed by RL Program Office:		Reviewed by Ecology:		Reviewed by Ecology:	
E. S. Aromi	Date 12/13/99	R. F. Guercia	Date DEC 2 1 1999	R. J. Julian	Date	L.E. Ruud	Date

[1]Class 1 modifications requiring prior Agency approval.

[2] This is only an advanced notification of an intended Class [1]1, 2, or 3 modification, this should be followed with a formal modification request, and consequently implement the required Public Involvement processes when required.

[3] If the proposed modification does not match any modification listed in WAC 173-303-830 Appendix I, then the proposed modification should automatically be given a Class 3 status. This status may be maintained by the Department of Ecology, or down graded to [1]1, if appropriate.

Hanford Facility RCRA Permit Modification Notification Form

Unit:	Permit Part & Chapter:
242-A Evaporator	**Part III, Chapter 5 and Attachment 35**

Description of Modification:

Appendix 7A, Section 9.3.:

9.3 Communications Equipment/Warning Systems

COMMUNICATIONS EQUIPMENT

TYPE	LOCATION	CAPABILITY
Fire alarms	Located throughout the facility in halls, corridors, and locker rooms.	Audible throughout the 242-A Evaporator Building
Roof siren	242-A Evaporator roof	Provide warning to personnel to take cover or evacuate.
Operations process alarms (from MCS or hard wired alarm panels)	242-A Evaporator control room	Audible in the 242-A Evaporator control room.
Public address system (PAX)	Located throughout the 242-A Evaporator Building (except in pump and evaporator rooms)	Provides communications and public address capabilities.
Portable Radios	242-A control room	Communication to the 242-A control room.
Telephone	242-A control room, office area's, AMU room, and condenser room.	Internal and external communications. Allows notification of outside resources (HFD, Hanford Patrol, etc.)
Crash alarm	242-A control room	Audible in the 242-A control room

Modification Class: [1 2 3]	Class 1	Class[1]1	Class 2	Class 3
Please check one of the Classes:	X			

Relevant WAC 173-303-830, Appendix I Modification: A.1.

Enter wording of the modification from WAC 173-303-830, Appendix I citation

1. General Permit Provisions
   A. Administrative and Informational changes.

Submitted by Co-Operator:		Reviewed by RL Program Office:		Reviewed by Ecology:		Reviewed by Ecology:	
E. S. Aromi	Date 12/13/99	R. F. Guercia	Date	R. J. Julian	Date	L.E. Ruud	Date

DEC 27 1999

[1]Class 1 modifications requiring prior Agency approval.

[2] This is only an advanced notification of an intended Class [1]1, 2, or 3 modification, this should be followed with a formal modification request, and consequently implement the required Public Involvement processes when required.

[3] If the proposed modification does not match any modification listed in WAC 173-303-830 Appendix I, then the proposed modification should automatically be given a Class 3 status. This status may be maintained by the Department of Ecology, or down graded to [1]1, if appropriate.

Hanford Facility RCRA Permit Modification Notification Form

Unit: 242-A Evaporator	Permit Part & Chapter: Part III, Chapter 5 and Attachment 35

Description of Modification:

Appendix 7A, Section 11.0:

11.0 REQUIRED REPORTS

Post incident, written reports are required for certain incidents on the Hanford Site. The reports are described in DOE/RL-94-02, Section ~~6.15~~.1.

Modification Class: [1 2 3]	Class 1	Class[1]1	Class 2	Class 3
Please check one of the Classes:	X			

Relevant WAC 173-303-830, Appendix I Modification: A.1.

Enter wording of the modification from WAC 173-303-830, Appendix I citation

1. General Permit Provisions
   A. Administrative and Informational changes.

Submitted by Co-Operator:		Reviewed by RL Program Office:		Reviewed by Ecology:		Reviewed by Ecology:	
E. S. Aromi	Date 12/13/99	R. F. Guercia	Date DEC 27 1999	R. J. Julian	Date	L.E. Ruud	Date

[1]Class 1 modifications requiring prior Agency approval.

[2] This is only an advanced notification of an intended Class [1]1, 2, or 3 modification, this should be followed with a formal modification request, and consequently implement the required Public Involvement processes when required.

[3] If the proposed modification does not match any modification listed in WAC 173-303-830 Appendix I, then the proposed modification should automatically be given a Class 3 status. This status may be maintained by the Department of Ecology, or down graded to [1]1, if appropriate.

Hanford Facility RCRA Permit Modification Notification Form

Unit:	Permit Part & Chapter:
242-A Evaporator	**Part III, Chapter 5 and Attachment 35**

Description of Modification:

Appendix 7A, Section 13.0.:

13.0 BUILDING EMERGENCY ORGANIZATION

BED	TITLE	WORK LOCATION	WORK PHONE
Primary	Shift Operation Manager (SOM)	242-A Evaporator control room or 200 Area Effluent Treatment Facility Control Room	373-2737, Evap control room 373-4446, Evap shift office 373-0993, ETF shift office 373-9000, ETF control room
Alternate	BED Qualified Shift Technical Authority ~~Operations Manager~~	2025E ~~2025EA Building, Room 101~~	372-0000 ~~373-4565~~

Modification Class: [1 2 3]	Class 1	Class[1]1	Class 2	Class 3
Please check one of the Classes:	X			

Relevant WAC 173-303-830, Appendix I Modification: A.1.

Enter wording of the modification from WAC 173-303-830, Appendix I citation

1. General Permit Provisions
   A. Administrative and Informational changes.

Submitted by Co-Operator:		Reviewed by RL Program Office:		Reviewed by Ecology:		Reviewed by Ecology:	
E. S. Aromi	Date	R. F. Guercia	Date	R. J. Julian	Date	L.E. Ruud	Date

[1]Class 1 modifications requiring prior Agency approval.

[2] This is only an advanced notification of an intended Class [1]1, 2, or 3 modification, this should be followed with a formal modification request, and consequently implement the required Public Involvement processes when required.

[3] If the proposed modification does not match any modification listed in WAC 173-303-830 Appendix I, then the proposed modification should automatically be given a Class 3 status. This status may be maintained by the Department of Ecology, or down graded to [1]1, if appropriate.

Hanford Facility RCRA Permit Modification Notification Form

Unit: 242-A Evaporator	Permit Part & Chapter: **Part III, Chapter 5 and Attachment 35**

Description of Modification:

Appendix 7A, Section 14.0:

14.0 REFERENCES

~~DOE 0223, *Emergency Plan Implementing Procedures:*~~

~~DOE 0232~~DOE-232.1, "Occurrence Reporting and Processing of Operations Information", U.S. Department of Energy, Washington D.C.

DOE/RL-94-02, Hanford ~~Site Emergency Response Plan~~

~~DOE Order 5500.1B,~~ *Emergency Management ~~Systems~~* Plan.

WAC 173-303, "Dangerous Waste Regulations," *Washington Administrative Code*, Washington State Department of Ecology, Olympia, Washington.

29 CFR 1910.120, *Hazardous Waste Operations and Emergency Response*

NIOSH, *Pocket Guide to Chemical Hazards*, National Institute of Occupational Safety and Health, U.S. Department of Health and Human Resources, Public Health Service, Centers for Disease Control, Washington, D.C.

Modification Class: [1 2 3]	Class 1	Class[1]1	Class 2	Class 3
Please check one of the Classes:	X			

Relevant WAC 173-303-830, Appendix I Modification: A.1.

Enter wording of the modification from WAC 173-303-830, Appendix I citation

1. General Permit Provisions
   A. Administrative and Informational changes.

Submitted by Co-Operator:		Reviewed by RL Program Office:		Reviewed by Ecology:		Reviewed by Ecology:	
12/13/99							
E. S. Aromi	Date	R. F. Guercia DEC 27 1999	Date	R. J. Julian	Date	L.E. Ruud	Date

[1]Class 1 modifications requiring prior Agency approval.

[2] This is only an advanced notification of an intended Class [1], 2, or 3 modification, this should be followed with a formal modification request, and consequently implement the required Public Involvement processes when required.

[3] If the proposed modification does not match any modification listed in WAC 173-303-830 Appendix I, then the proposed modification should automatically be given a Class 3 status. This status may be maintained by the Department of Ecology, or down graded to [1]1, if appropriate.

Hanford Facility RCRA Permit Modification Notification Form

Unit: 242-A Evaporator	Permit Part & Chapter: Part III, Chapter 5 and Attachment 35

Description of Modification:

Appendix 7A, Attachment A:

ATTACHMENT A
Listing of Procedures and Guides

Site-Wide Procedures

DOE-0223, *Emergency Plan Implementing Procedures*:

- RLEP-1.1, "Hanford Incident Command System and Event Recognition and Classification," Appendix 1-2.M;
- RLEP-3.4, "Emergency Termination, Reentry, and Recovery."

Facility-Specific Emergency Response Procedures ~~and Guides~~

HNF-IP-1053, *242-A Evaporator Response Manual*
(includes the ERGs and PCPs listed below)

~~Emergency Response Guides~~

- ~~ERG No. 1 Evacuation~~
- ~~ERG No. 2 Take Cover~~
- ~~ERG No. 3 Volcanic Eruption and Ashfall~~
- ~~ERG No. 4 Seismic Event~~
- ~~ERG No. 5 Fire and/or Explosion~~
- ~~ERG No. 6 High Area Radiation~~
- ~~ERG No. 7 Bomb Threat~~

Plant Casualty Plans

- ~~PCP No. 1 Emergency Shutdown of Utility Systems~~
- ~~PCP No. 2 Loss of Electrical Power~~
- ~~PCP No. 3 Loss of the Raw Water System~~
- ~~PCP No. 4 Loss of the K1 Ventilation system~~
- ~~PCP No. 5 Loss of the Steam System~~
- ~~PCP No. 6 Loss of Compressed Air System~~
- ~~PCP No. 7 Loss of MCS Control~~
- ~~PCP No. 8 Pressure Hazard~~
- ~~PCP No. 9 Process Upset~~
- TO-685-001 Emergency Shutdown of Utility Support Systems
- TO-685-002 242A Evaporator Loss of Electrical Power
- TO-685-003 242A Evaporator Loss of Raw Water Systems
- TO-685-004 242A Evaporator Loss of K-1 Ventilation Systems
- TO-685-005 242A Evaporator Loss of Steam Systems
- TO-685-006 242A Evaporator Loss of Compressed Air System
- TO-685-007 242A Evaporator Loss of MCS Control
- TO-685-008 242A Evaporator Pressure Hazards
- TO-685-009 Process Upset
- EP-685-010 242A Evaporator Evacuation
- EP-685-020 242A Evaporator Take Cover
- EP-685-030 242A Evaporator Volcanic Eruption and Ashfall
- EP-685-040 242A Evaporator Seismic Event
- EP-685-050 242A Evaporator Fire and/or Explosion
- EP-685-060 242A Evaporator High Radiation Area
- EP-685-070 242A Evaporator Bomb Threat
- EP-685-080 242A Natural Emergency/Sercurity Contingency Event

Modification Class: [1,2,3]	Class 1	Class [1]1	Class 2	Class 3
Please check one of the Classes:	X			

Relevant WAC 173-303-830, Appendix I Modification: A.1.

Enter wording of the modification from WAC 173-303-830, Appendix I citation

1. General Permit Provisions
   A. Administrative and Informational changes.

Submitted by Co-Operator:		Reviewed by RL Program Office:		Reviewed by Ecology:		Reviewed by Ecology:	
E. S. Aromi	Date	R. F. Guercia	Date	R. J. Julian	Date	L.E. Ruud	Date

[1]Class 1 modifications requiring prior Agency approval.

[2] This is only an advanced notification of an intended Class [1]1, 2, or 3 modification, this should be followed with a formal modification request, and consequently implement the required Public Involvement processes when required.

[3] If the proposed modification does not match any modification listed in WAC 173-303-830 Appendix I, then the proposed modification should automatically be given a Class 3 status. This status may be maintained by the Department of Ecology, or down graded to [1]1, if appropriate.

Hanford Facility RCRA Permit Modification Notification Forms

Part III, Chapter 5 and Attachment 35
242-A Evaporator

Replacement Chapters

Index

Chapter 2

Appendix 4

Appendix 7A

CONTENTS

2.0 FACILITY DESCRIPTION AND GENERAL PROVISIONS [B AND E] 2-1
2.1 242-A EVAPORATOR DESCRIPTION [B-1] 2-1
2.1.1 Process Buildings 2-1
2.1.1.1 Control Room 2-1
2.1.1.2 Aqueous Makeup Room 2-2
2.1.1.3 Evaporator Room 2-2
2.1.1.4 Condenser Room 2-2
2.1.1.5 Pump Room 2-2
2.1.1.6 Loadout and Hot Equipment Storage Room 2-2
2.1.1.7 Loading Room 2-3
2.1.1.8 Heating, Ventilation, and Air Conditioning Room 2-3
2.1.1.9 Ion Exchange Column Room 2-3
2.1.1.10 Miscellaneous Offices, Lunch Room, Lavatories, and Change Rooms 2-3
2.1.2 External Equipment and Structures 2-3
2.1.2.1 The 207-A Retention Basins 2-3
2.1.2.2 Steam Service Supply 2-3
2.1.2.3 Ventilation Exhaust Fans and Filter Housing 2-3
2.1.2.4 Raw Water Service Building 2-4
2.1.3 Other Environmental Permits 2-4
2.1.4 Construction Schedule 2-4
2.2 TOPOGRAPHIC MAP [B-2] 2-4
2.3 ROADWAY TRAFFIC TO THE 242-A EVAPORATOR [B-4] 2-4
2.4 RELEASE FROM SOLID WASTE MANAGEMENT UNITS [E] 2-4

APPENDIX

2A TOPOGRAPHIC MAP ..... APP 2A-i

FIGURES

Figure 2-1. 242-A Evaporator Simplified Schematic. F2-1
Figure 2-2. 242-A Evaporator Perspective. F2-2
Figure 2-3. 242-A Evaporator First Floor Plan. F2-3
Figure 2-4. 242-A Evaporator Second Floor Plan. F2-4
Figure 2-5. Side View of 242-A and 242-AB Buildings. F2-5

This page intentionally left blank.

2.0 FACILITY DESCRIPTION AND GENERAL PROVISIONS [B AND E]

The 242-A Evaporator is an existing waste management unit located in the 200 East Area (Chapter 1.0).

The 242-A Evaporator treats mixed waste from the Double-Shell Tank System (DST System) (DOE/RL-90-39) by removing water and most volatile organics. The mixed waste is separated into a slurry stream and a process condensate stream.

A more detailed discussion of waste types and manifesting, and the identification of the processes and equipment, are provided in Chapters 3.0 and 4.0 respectively. Although the treatment, storage, and/or disposal of radioactive waste (i.e., source, special nuclear, and by-product materials as defined by the *Atomic Energy Act of 1954*) are not within the scope of *Resource Conservation and Recovery Act* (RCRA) *of 1976* or WAC 173-303, information is provided for general knowledge.

2.1 242-A EVAPORATOR DESCRIPTION [B-1]

The following sections provide general descriptions of the 242-A Evaporator process components (Figure 2-1). Detailed process information for each component is provided in Chapter 4.0.

2.1.1 Process Buildings

The principle process components of the 242-A Evaporator system are located in the 242-A and 242-AB Buildings (Figure 2-2), along with supporting service and operating areas. These buildings enclose the following areas that handle mixed waste:

- Evaporator room
- Condenser room
- Pump room
- Loadout and hot equipment storage room
- Loading room
- Ion exchange column room.

In addition, 242-A and 242-AB Buildings enclose the following areas that do not contain or handle mixed waste.

- Control room (242-AB Building)
- Aqueous makeup (AMU) room
- Heating, ventilation, and air conditioning (HVAC) room
- Miscellaneous offices, lunch room, lavatories, and change rooms.

Figures 2-3 and 2-4 provide floor plans for the first and second floors of the 242-A and 242-AB Buildings and Figure 2-5 provides building elevations.

2.1.1.1 Control Room

The new control room, located in the 242-AB Building, contains the centralized monitoring and control system (MCS). The MCS computer monitors process parameters and controls the parameters where required. Once the configuration parameters and other process control functions are set, the MCS functions independently of the operator, maintaining process parameters within specified ranges by sending output signals that operate specific pieces of equipment (e.g., control valves).

The control room also has instrumentation that monitors alarms at 241-AW, 241-AN, 241-AP, 241-A, and 242-AX Tank Farms, as well as computer terminals for the computer automated surveillance system (CASS) and the laboratory computer system (for access to sample results).

2.1.1.2 Aqueous Makeup Room

The AMU room, located on the south end of the 242-A Building, is used for receiving and mixing chemicals and transferring these into the process. The room contains the antifoam tank (E-102), a 378-liter (100-gallon) tank used to hold antifoam added to the process, the eluant tank (E-101), a 15,900-liter tank that is no longer used, and the decontamination tank (E-104), a 2,350-liter tank used to hold decontamination solutions, such as water or citric acid.

2.1.1.3 Evaporator Room

The evaporator room contains the vapor-liquid separator where evaporative separation and concentration take place, and the reboiler, which heats process solution to the required temperature. The room is set 3.0 meters belowgrade and extends approximately five stories abovegrade with work platforms located at each level.

Personnel entries to the evaporator room are made only for nonroutine maintenance and inspections. Such entries require that the evaporator vessel be drained and flushed with water or decontamination solution to reduce radiation exposure to personnel.

2.1.1.4 Condenser Room

The condenser room, like the adjacent evaporator room, is approximately five stories abovegrade, with the floor set 3.0 meters belowgrade. Condensed vapors from three condensers drain by gravity to the condensate collection tank located on the bottom floor. The condenser room also houses the vacuum condenser system, process condensate pump, condensate recycle pump, process instrumentation, and other equipment.

Also located in the condenser room is the vessel ventilation system. The vessel ventilation system is used to filter and exhaust noncondensable vapors from the 242-A Evaporator process vessels. The system consists of a deentrainment unit, prefilter, heater, high-efficiency particulate air (HEPA) filters, and an exhauster.

2.1.1.5 Pump Room

The pump room is located directly south of the evaporator room and houses the recirculation pump and slurry pump. Equipment in the pump room is designed to be maintained remotely using a bridge-type service crane. Concrete cover blocks (that can be moved by the crane) cover the pump room to provide confinement of contaminants.

A portion of the pump room floor is set 3.0 meters belowgrade to contain potential spills. Located in this section of the floor is a 1.5-meter by 1.5-meter by 1.8-meter deep sump lined with stainless steel to collect spills from various floor drains.

2.1.1.6 Loadout and Hot Equipment Storage Room

The loadout and hot equipment storage room is located adjacent to the pump room and is open to the overhead crane gallery. Failed pump room equipment (pumps, jumpers, etc.) are placed here by crane, decontaminated, and either repaired or packaged for disposal.

A shielded sampling enclosure is located within the room along a portion of the wall that is common with the pump room. Sampling lines run from the pump room to this enclosure. Valve handles outside the enclosure and a shielded viewing window allow the remote collection of feed and slurry samples.

2.1.1.7 Loading Room

The loading room is located in the southwest corner of the 242-A Building. The ceiling of the loading room is formed by a rollup, nylon-vinyl curtain-type door enclosure that can be rolled open to allow transfer of equipment between the loading room and the loadout and hot equipment storage room using the overhead crane.

2.1.1.8 Heating, Ventilation, and Air Conditioning Room

The HVAC room is located on the second floor, directly above the AMU room. The HVAC room contains the supply ventilation equipment for the 242-A Building.

2.1.1.9 Ion Exchange Column Room

The ion exchange enclosure is a small area that holds the ion exchange column for process condensate treatment. The enclosure is located on the north wall of the condenser room.

2.1.1.10 Miscellaneous Offices, Lunch Room, Lavatories, and Change Rooms

The offices, lunch room, lavatories, and change rooms are located on the first floor away from contaminated areas.

2.1.2 External Equipment and Structures

In addition to the equipment and structures housed within the 242-A and 242-AB Buildings, some external equipment and structures are required for 242-A Evaporator operation. These external units include the following:

- The 207-A retention basins
- Steam service supply
- Ventilation exhaust fans and HEPA filter housing
- Raw water service building.

2.1.2.1 The 207-A Retention Basins

The 207-A retention basins consist of six basins constructed of reinforced concrete, each having about 265,000 liters capacity. The north three basins were used to temporarily store non-contact steam condensate from the 242-A Evaporator for sampling before discharge. Subsequently, the stream condensate was routed directly to the 200 Area Treated Effluent Disposal Facility (TEDF) and the 207-A retention basins are no longer used. The three north basins are included in the 242-A Evaporator waste management unit. The three south basins previously held process condensate mixed waste for sampling and discharge. These basins have been removed from service, emptied, and will be closed under a separate closure plan.

2.1.2.2 Steam Service Supply

Steam needed for the 242-A Evaporator process currently is supplied by the 200 East Area powerhouse, 284-E Building, which supplies a high-pressure steam loop serving many units in the 200 East Area. A 6-inch steam line supplies 1,550 kilopascals gauge pressure steam to the 242-A Evaporator Building. In the future, the 284-E Building will be shut down and steam will be provided to units in the 200 East Area (including the 242-A Evaporator) by several package boilers. The 284-E Building and the package boilers are not part of the 242-A Evaporator.

2.1.2.3 Ventilation Exhaust Fans and Filter Housing

The exhaust fans and the HEPA filter system are located north of the 242-A Evaporator. There is no dangerous or mixed waste associated with this exhaust system, which ventilates the various rooms within the building for contamination control.

2.1.2.4 Raw Water Service Building

The raw water service building (242-A-81) houses the valves and strainers for routing raw process water to the 242-A Evaporator. Columbia River water is supplied to the water service building from the 284-E Water Supply Reservoir. Water used to backflush strainers in the water service building is routed to TEDF. No dangerous or mixed waste is present in the raw water service building. The 284-E Water Supply Reservoir is not considered part of the 242-A Evaporator.

2.1.3 Other Environmental Permits

All environmental permits that are required to support operation of the 242-A Evaporator are identified in the *Annual Hanford Site Environmental Permitting Status Report* (e.g., DOE/RL-96-63).

2.1.4 Construction Schedule

Any proposed new construction for mixed waste operations will be managed as described in the Hanford Facility RCRA Permit.

2.2 TOPOGRAPHIC MAP [B-2]

A topographic map (Drawing H-13-000039) is located in Appendix 2A.

2.3 ROADWAY TRAFFIC TO THE 242-A EVAPORATOR [B-4]

General traffic information for the Hanford Facility is presented in the General Information Portion (DOE/RL-91-28). Access to the 242-A Evaporator is provided by 4th Street to the south and Canton Avenue to the east. These roads are constructed of bituminous asphalt that provides satisfactory all-weather access. Paved parking areas are provided for 242-A Evaporator personnel.

2.4 RELEASE FROM SOLID WASTE MANAGEMENT UNITS [E]

Information concerning releases from solid waste management units is discussed in the General Information Portion (DOE/RL-91-28).

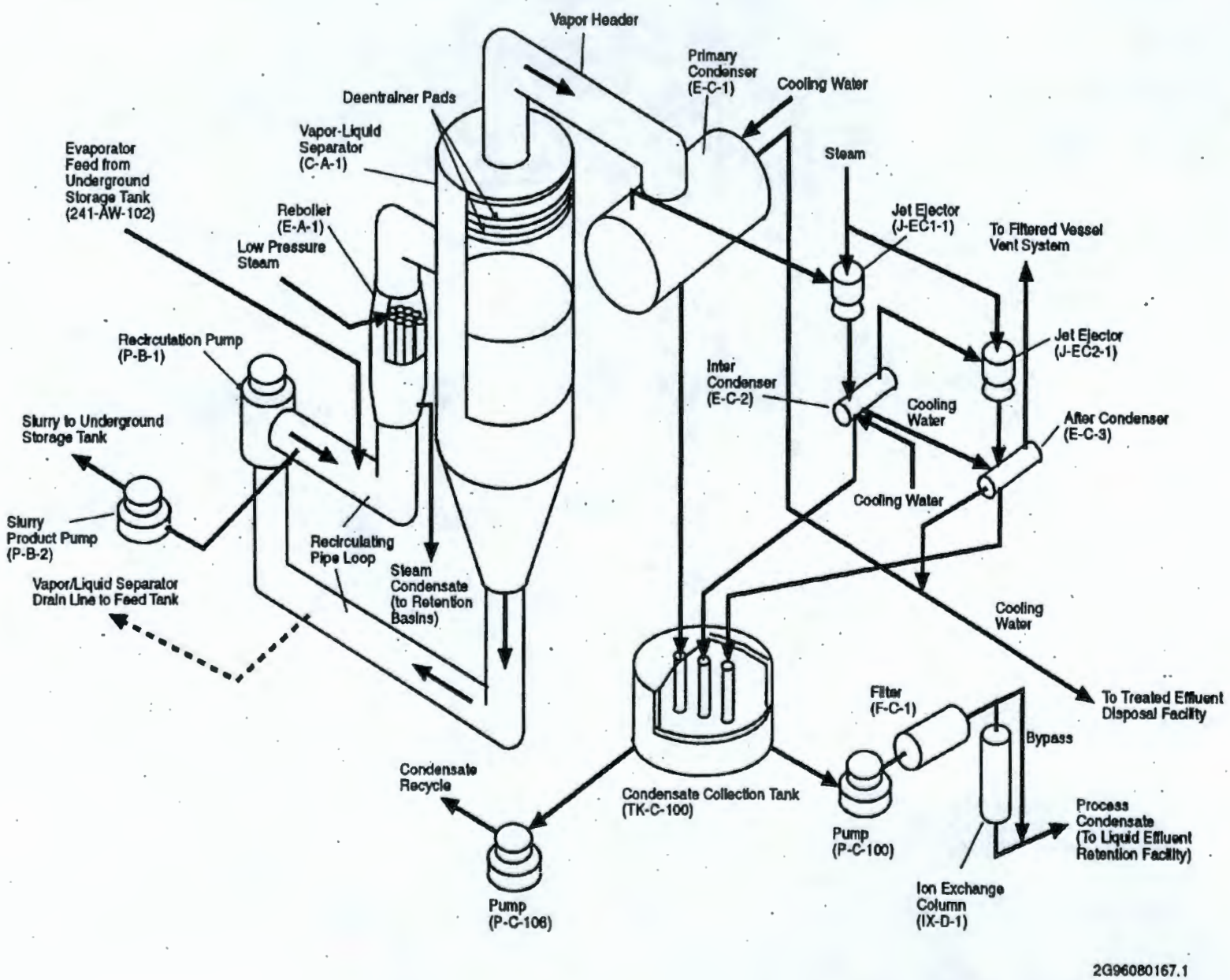

Figure 2-1. 242-A Evaporator Simplified Schematic.

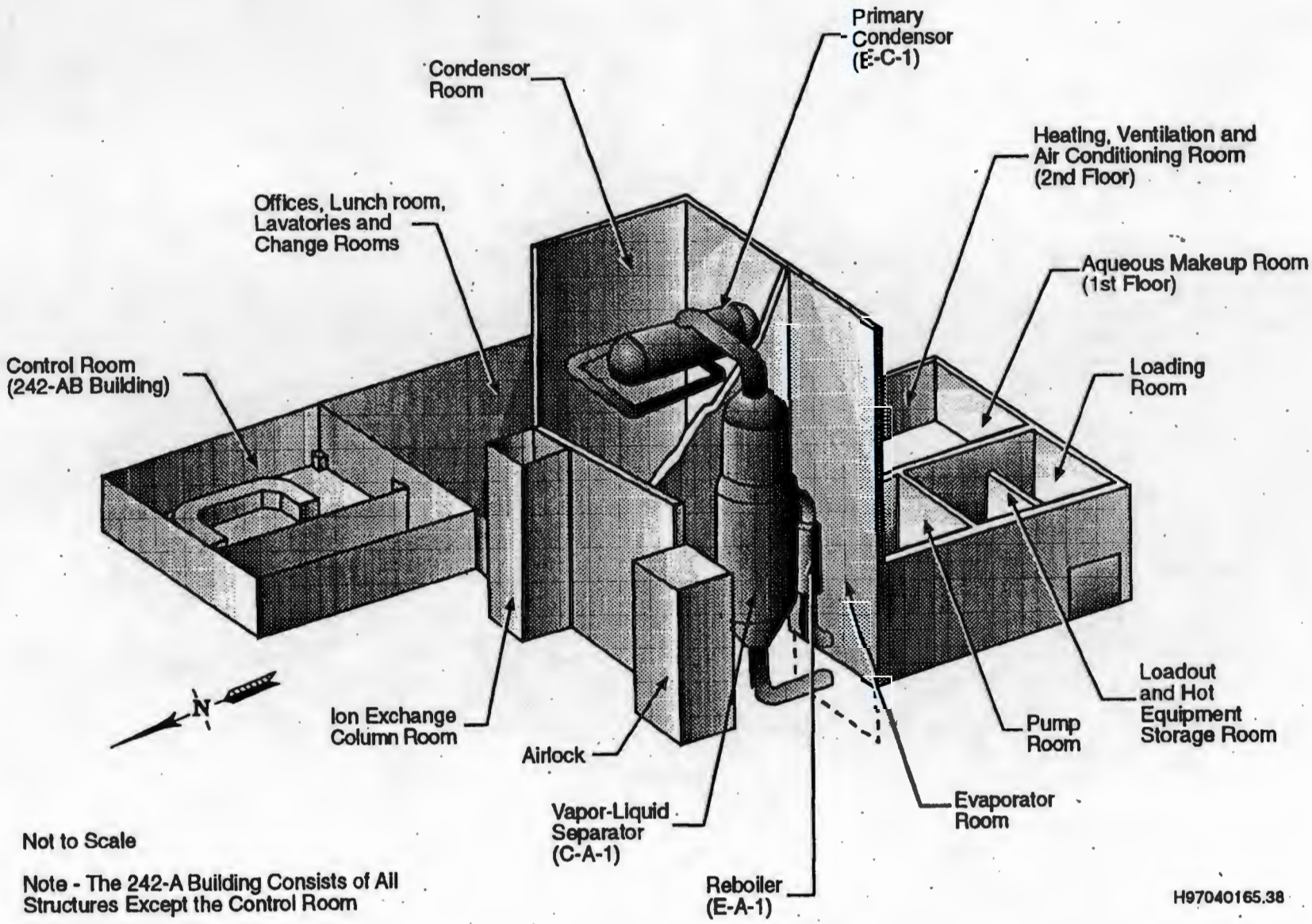

Not to Scale

Note - The 242-A Building Consists of All Structures Except the Control Room

Figure 2-2. 242-A Evaporator Perspective.

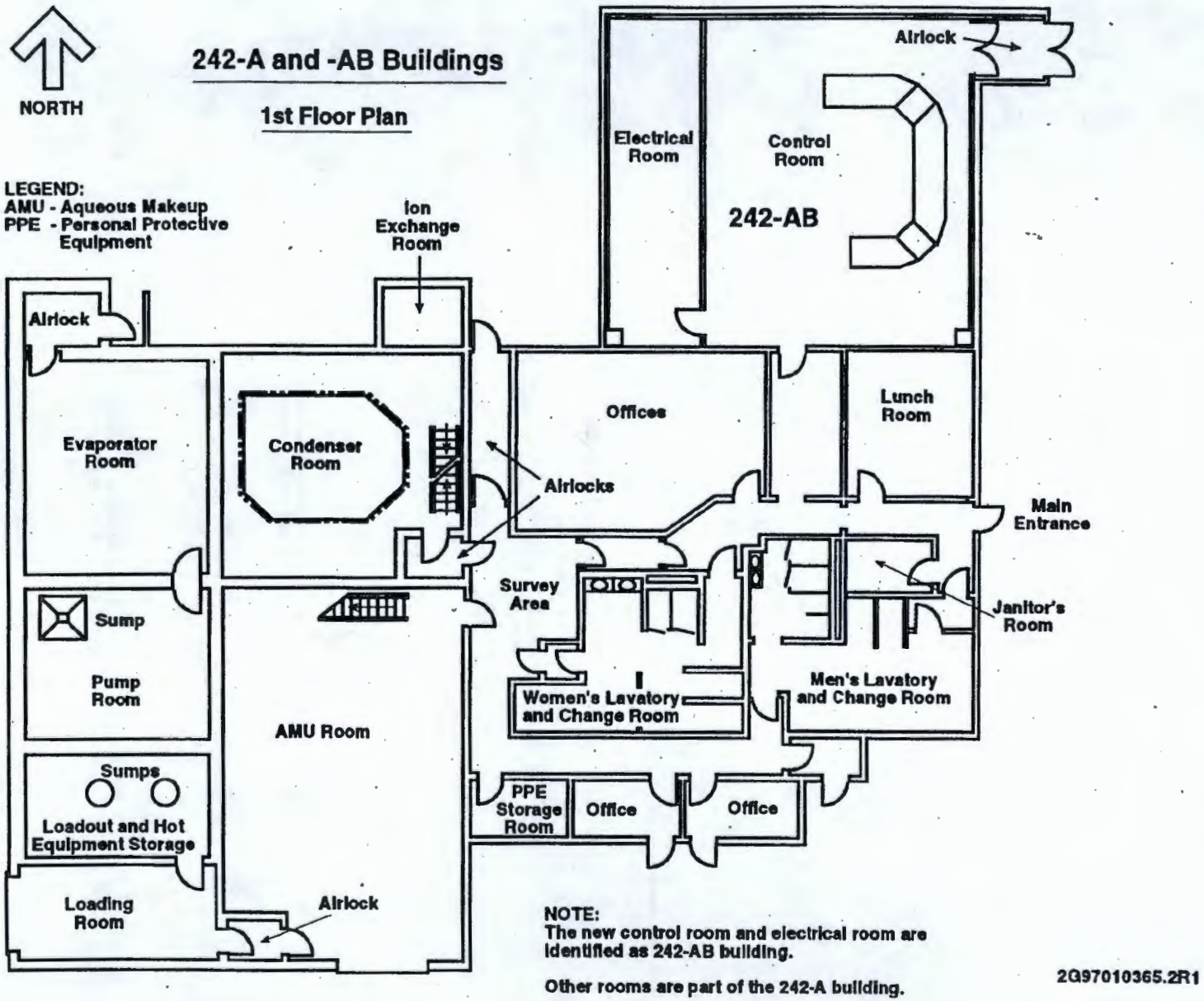

Figure 2-3. 242-A Evaporator First Floor Plan.

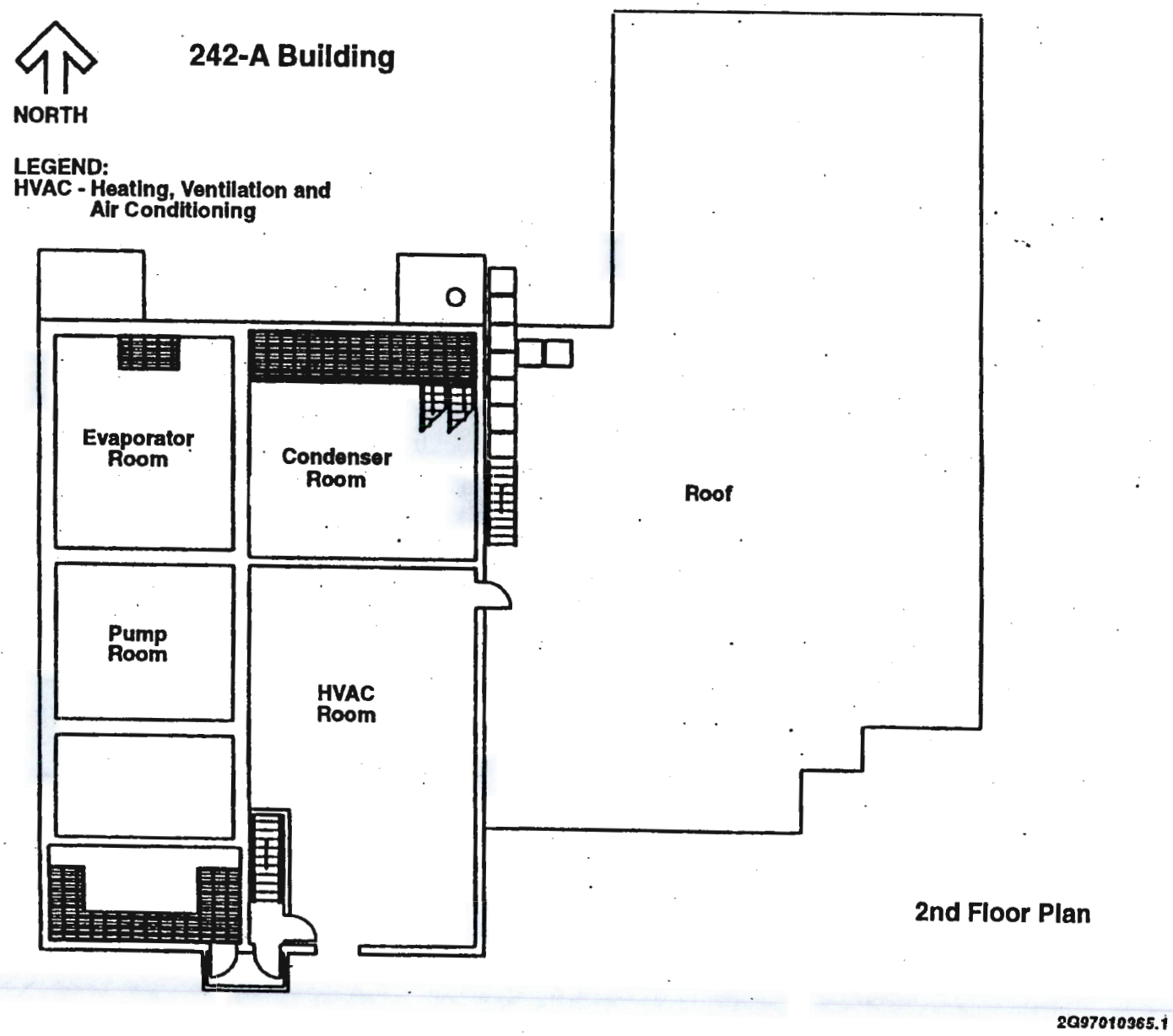

Figure 2-4. 242-A Evaporator Second Floor Plan.

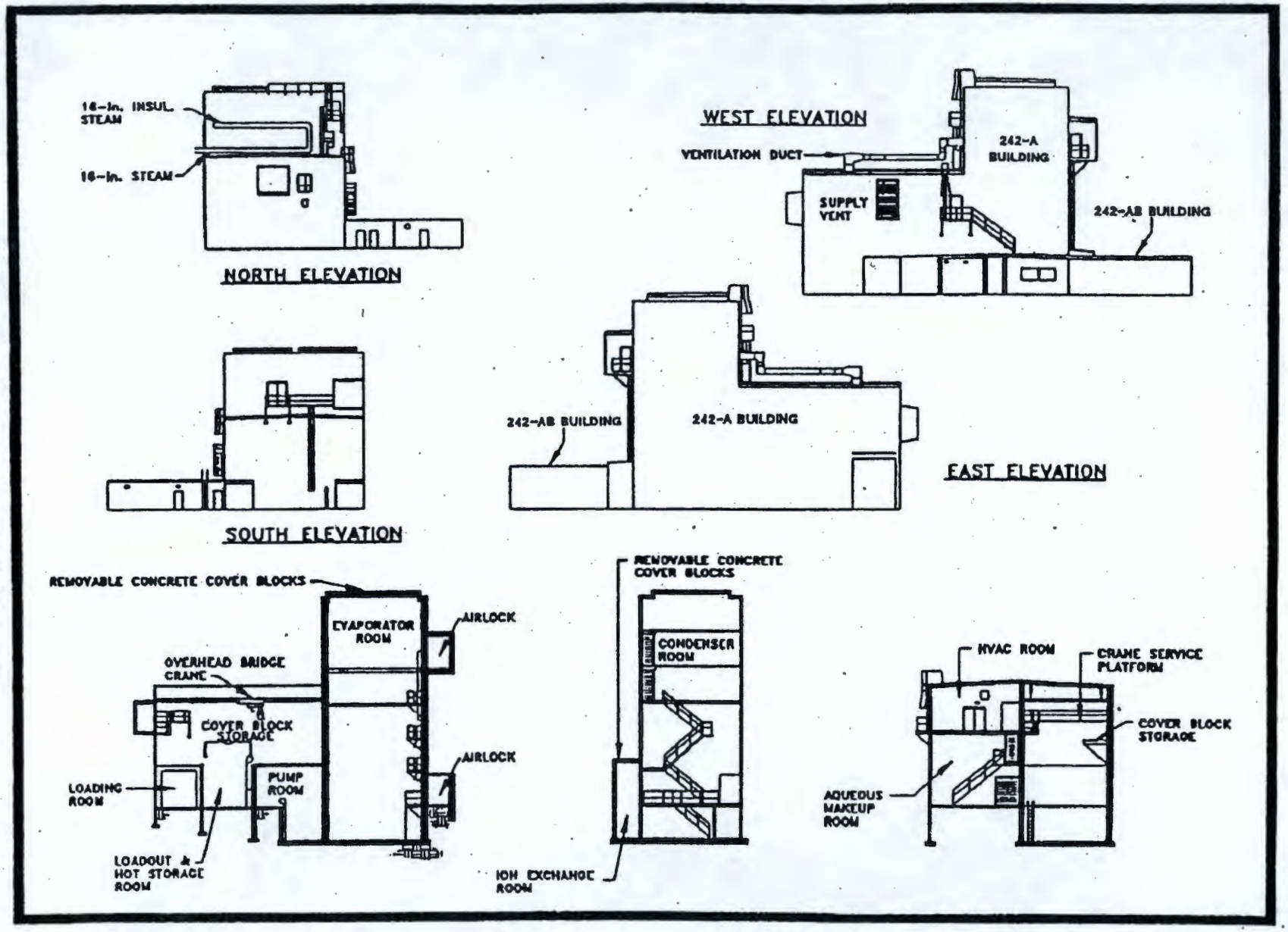

Figure 2-5. Side View of 242-A and 242-AB Buildings.

This page intentionally left blank.

CONTENTS

4.0 PROCESS INFORMATION [D] 4-1

4.1 TANK SYSTEMS [D-2] 4-2
4.1.1 Design Requirements [D-2a(1)] 4-2
4.1.1.1 Vapor-Liquid Separator (C-A-1) and Ancillary Equipment 4-3
4.1.1.2 Condensate Collection Tank (C-100) and Ancillary Equipment 4-5
4.1.2 Integrity Assessments [D-2a(2)] 4-7
4.1.3 Additional Requirements for Existing Tanks [D-2a(3)] 4-8
4.1.4 Secondary Containment and Release Detection for Tank Systems [D-2b] 4-8
4.1.4.1 Requirements for All Tank Systems [D-2b(1)] 4-8
4.1.4.2 242-A Building Secondary Containment 4-8
4.1.4.3 Transfer Line Containment 4-11
4.1.4.4 Additional Requirements for Specific Types of Systems [D-2b(2)] 4-12
4.1.5 Variances from Secondary Containment Requirements [D-2c] 4-13
4.1.6 Tank Management Practices [D-2d] 4-13
4.1.7 Labels or Signs [D-2e] 4-14
4.1.8 Air Emissions [D-2f] 4-14
4.1.9 Management of Ignitable or Reactive Wastes in Tank Systems [D-2g] 4-14
4.1.10 Management of Incompatible Wastes in Tank Systems [D-2h] 4-15

4.2 AIR EMISSIONS CONTROL [D-8 and D-8a] 4-15
4.2.1 Applicability of Subpart AA Standards [D-8a(1)] 4-15
4.2.2 Process Vents - Demonstrating Compliance [D-8a(2)] 4-15
4.2.2.1 Basis for Meeting Limits/Reductions [D-8a(2)(a)] 4-16
4.2.2.2 Demonstrating Compliance [D-8a(2)(b)] 4-16
4.2.2.3 Reevaluating Compliance with Subpart AA Standards [D-8a(2)(d)] 4-16

4.3 WASTE MINIMIZATION [D-9] 4-16

APPENDICES

4A ENGINEERING DRAWINGS 4A-i

4B THE 242-A EVAPORATOR/CRYSTALLIZER TANK SYSTEM INTEGRITY ASSESSMENT REPORT 4B-i

FIGURES

Figure 4-1. 242-A Evaporator Simplified Process Flow Diagram.....F4-1
Figure 4-2. 242-A Evaporator Process Loop. F4-2
Figure 4-3. 242-A Evaporator Slurry System. F4-3
Figure 4-4. 242-A Evaporator Process Condensate System. F4-4
Figure 4-5. 242-A Evaporator Vacuum Condenser System.....F4-5
Figure 4-6. 242-A Evaporator Drain System. F4-6

TABLE

Table 4-1. Chemical Composition of Clinoptilolite.....T4-1

4.0 PROCESS INFORMATION [D]

The 242-A Evaporator receives mixed waste from the DST System that contain inorganic and organic constituents and radionuclides. A 242-A Evaporator simplified process flow diagram is given in Figure 4-1. The 242-A Evaporator separates the mixed waste received from the DST System, generating the following waste streams:

- A concentrated aqueous waste stream (slurry) containing the nonvolatile components, including most of the radionuclides, inorganic constituents, and nonvolatile organics such as tri-butyl phosphate
- A dilute aqueous waste stream (process condensate) containing the volatile components, primarily water with low concentrations of radionuclides, inorganic constituents, and volatile constituents such as ammonia and acetone.

The slurry is routed back to the DST System pending further treatment. The process condensate is transferred to the LERF for storage until processed through the ETF.

The 242-A Evaporator process employs a conventional forced circulation, vacuum evaporation system to concentrate the DST System waste solution. The major components of this system include the reboiler, vapor-liquid separator, recirculation pump and pipe loop, slurry product pump, condenser, jet vacuum system, condensate collection tank, and an optional ion exchange system.

The vapor-liquid separator, C-A-1, also called the evaporator vessel, and the condensate collection tank, C-100, meet the definition of a tank in WAC 173-303-040. Other process equipment associated with these tank systems is considered ancillary equipment. Drawings that aid in understanding the systems are provided in Appendix 4A.

The 242-A Evaporator receives waste from a DST System tank, 241-AW-102 that serves as the 242-A Evaporator feed tank. The feed enters the recirculation line and blends with the main process slurry stream, which is pumped to the reboiler.

In the reboiler, the mixture is heated to the specified operating temperature, normally 38 to 77°C, using 21 to 69 kilopascals gauge pressure steam. The low-pressure steam provides adequate heat input, and the resulting low-temperature differential across the reboiler minimizes scale formation on the heat transfer surfaces. The static pressure of the waste in the reboiler is sufficient to suppress the boiling point so the waste does not boil in the reboiler tubes. Boiling occurs only near or at the liquid surface in the vapor-liquid separator.

The heated slurry stream is discharged from the reboiler to the vapor-liquid separator (C-A-1) that typically is maintained at an absolute pressure of 5.3 to 10.7 kilopascals. Under this reduced pressure, a fraction of the water in the heated slurry flashes to steam and the steam is drawn through two wire mesh deentrainer pads into a 42-inch diameter vapor line that leads to the primary condenser, leaving behind a more concentrated slurry solution in the vapor-liquid separator.

After a brief residence time in the vapor-liquid separator, the slurry exits from the bottom through the lower recirculation line and is recirculated by the recirculation pump (P-B-1). The pump discharges the slurry back to the reboiler via the upper recirculation line, thus completing the recirculation loop.

The specific gravity of the waste liquid is monitored closely to ensure that the target density, established before the beginning of the campaign, is not exceeded. A portion of the slurry is removed from the upper recirculation line using the slurry pump (P-B-2) and transferred through an encased underground pipeline (pipe-within-a-pipe) to a designated slurry receiver tank in the DST System.

Vapors are drawn from the vapor-liquid separator through a 42-inch diameter vapor line and enter a series of three condensers where the vapors are condensed using raw water. The condensed vapors, called process condensate, are collected in tank C-100. Steam jets are used to create a vacuum on the

vapor-liquid separator drawing the process vapors into and through the condensers. Noncondensable vapors are drawn from the condensers through a series of particulate filters and vented to the atmosphere. The air discharges are monitored continuously when the 242-A Evaporator is operating to verify that standards for radionuclide and ammonia emissions are met.

Process condensate contains the volatile constituents of the waste and trace quantities of inorganic materials and radionuclides. The process condensate could be passed through an ion exchange column to reduce the radionuclide content if necessary. The process condensate is pumped from tank C-100 through an encased underground pipeline (pipe-within-a-pipe) to the LERF.

During a campaign, the evaporation process is continuous with typical feed flow rates of 260 to 450 liters per minute, process condensate flow rates of 150 to 230 liters per minute, and slurry flow rates of 110 to 230 liters per minute. The evaporator process is shutdown when the desired endpoint concentration of the slurry is met. Endpoints are established at the beginning of the campaign, based on allowable waste volume reduction (WVR) and defined operating limits. If the evaporation rate cannot achieve the desired endpoint, slurry in the DST System serving as the slurry receiver is transferred to the feed tank for one or more additional passes through the 242-A Evaporator. At the end of each campaign, the 242-A Evaporator process equipment is shutdown, emptied, flushed with raw water, and placed in a safe standby mode.

Other discharges during 242-A Evaporator processing include condensate from the steam used to heat the waste and cooling water used to condense the vapors. The 242-A Evaporator is designed to prevent contamination of these streams. The fluids on the uncontaminated side of the heat exchangers are maintained at a higher pressure than the waste stream so that uncontaminated fluid migrates toward the contaminated waste if a leak were to occur. The steam condensate is discharged to the TEDF. The cooling water is monitored continuously for radiation and discharged to TEDF as long as the radiation limits are not exceeded. The steam condensate and cooling water streams were assessed in the stream specific reports (WHC 1990a and WHC 1990b) and are not dangerous waste in accordance with WAC 173-303.

The 242-A Evaporator process is controlled by the MCS. The MCS computer monitors all process parameters and controls the parameters where required. Once the configuration parameters and other process control inputs are set, the MCS functions independently of the operator, maintaining the process parameters within specified ranges by sending output signals that operate specific pieces of equipment (e.g., control valves).

4.1 TANK SYSTEMS [D-2]

This section discusses information associated with design requirements, integrity assessments, and any additional requirements for tanks used to treat and store mixed waste in the 242-A Evaporator.

4.1.1 Design Requirements [D-2a(1)]

The following design requirements are addressed in the *242-A Evaporator/Crystallizer Tank System Integrity Assessment Report* (IAR) (Appendix 4B):

- Minimum design wall thicknesses and measured wall thicknesses at various points throughout the tank systems
- Design standards used in construction, including references
- Waste characteristics
- Materials of construction and compatibility of materials with the waste being processed

- Corrosion protection
- Seismic design basis evaluation.

The conclusion of the IAR is that the 242-A Evaporator system is not leaking and is fit for use. The inspections, tests, and analyses performed provide assurance that the tank system has adequate design, sufficient structural strength, and sufficient compatibility with the waste to not collapse, rupture, or fail during operation. The report also states that a review of construction files indicates that the building structure was designed and constructed to withstand a design-basis earthquake.

4.1.1.1 Vapor-Liquid Separator (C-A-1) and Ancillary Equipment

The following sections describe the vapor-liquid separator (C-A-1) and ancillary equipment.

Waste Feed System. Feed to the 242-A Evaporator is supplied via a pump located in the 241-AW-102 feed tank. The feed pump transfers the waste to the 242-A Evaporator through a 3-inch diameter carbon steel transfer pipeline encased in a 6-inch diameter carbon steel pipe to provide secondary containment. The feed pipeline is equipped with a leak detection system.

Samples can be taken from the waste feed when needed. The feed sampler (SAMP-F-1) is located in a sample enclosure located in the loadout and hot equipment storage room.

Evaporator Process Loop. The 242-A Evaporator process loop equipment components are as follows:

- Reboiler (E-A-1)
- Vapor-liquid separator (C-A-1)
- Recirculation pump (P-B-1)
- Recirculation loop.

Figure 4-2 is a simplified process flow diagram showing the major components of the process loop.

Reboiler (E-A-1). Waste is heated as the waste passes through the reboiler before entering the vapor-liquid separator. The reboiler is a vertical tube unit with steam on the shell-side and process solution on the tube-side. The 364 tubes in the reboiler are enclosed in a 1.03 meter outside diameter, 4.6-meter-long stainless steel shell. Both the reboiler shell and tubes are constructed of 304L stainless steel. The shell is 0.64 centimeter thick and the tubes are 14 gauge steel. The reboiler is designed to distribute steam evenly and to prevent tube damage from water droplets that may be present in the steam.

Vapor-Liquid Separator (C-A-1). Process solution from the reboiler enters the vapor-liquid separator via the upper recirculation line. Some of the solution flashes into vapor, which exits through a vapor line at the top of the vapor-liquid separator. The remaining solution (slurry) exits through the recirculation line at the bottom.

The separator consists of a lower and upper section. The lower (liquid) section is a stainless steel shell 4.3 meters in diameter having an 85,200 to 94,600 liter normal operating capacity (including recirculation loop and reboiler). The maximum design capacity is 103,000 liters. The upper (vapor) section is a stainless steel shell 3.5 meters in diameter containing two deentrainment pads. These wire mesh pads remove liquids and solids that entrain into the vapor section of the vessel. Spray nozzles, using recycled process condensate or filtered raw water, wash collected solids from the deentrainment pads and vessel walls. Both sections of the vapor-liquid separator are constructed of 0.95-centimeter-thick stainless steel.

Pressure in the vapor-liquid separator is monitored to provide an indication of process problems such as slurry foaming, deentrainer flooding, or excessive vapor temperatures. Instrumentation also is available to monitor the liquid levels in the vapor-liquid separator. Interlocks are activated when high pressures or

high- or low-liquid levels are detected, shutting down the evaporation process and placing the facility in a safe configuration.

The vapor-liquid separator and recirculation loop can be flushed to remove any residual solids from the system and/or to reduce radiation levels. The most common flush solution is water, but dilute nitric or citric acid solutions could be used. All acidic flush solutions are chemically adjusted to meet DST acceptance criteria before transfer to the DST System. The capability also exists to add an antifoam solution (at very low flowrates - approximately 0.04 to 0.4 liters per minute) to the vessel to prevent foaming. The antifoam solution is a noncorrosive, nonregulated silicone-based solution that is compatible with the evaporator components.

Recirculation Pump. The stainless steel recirculation pump (P-B-1), is constructed as part of the recirculation loop to the reboiler. The 28-inch diameter axial flow pump has a 60,900 liters per minute output. The recirculation pump is designed to handle slurry up to 30 percent undissolved solids by volume at specific gravities up to 1.8. The recirculation pump moves waste at high velocities through the reboiler to improve heat transfer, keep solids in suspension, and reduce fouling of the heat transfer surfaces.

The recirculation pump is equipped with shaft seals with high pressure recycled process condensate (or water) introduced between the seals to prevent the waste solution from leaking out of the system. Seal water pressure and flow are monitored and controlled to shut down the recirculation pump if conditions are not adequate to prevent waste liquid from migrating into the seal water. The used seal water is routed to the feed tank.

Recirculation Loop. The recirculation loop consists of a 28-inch diameter stainless steel pipe that connects the vapor-liquid separator to the recirculation pump and reboiler. The lower loop runs from the bottom of the vapor-liquid separator to the recirculation pump inlet. The upper loop connects the pump discharge to the reboiler and the reboiler to the vapor-liquid separator. The feed line from the feed tank and the slurry line to underground storage tanks are connected to the upper recirculation line.

Slurry System. The slurry system draws a portion of the concentrated waste from the upper recirculation loop and transfers it to the DST System. The major components of the slurry system are the slurry pump and the slurry transfer pipelines. Figure 4-3 shows a simplified flow diagram of the slurry system. These components are described in the following paragraphs.

The slurry pump (P-B-2) is used to transfer slurry from the recirculation loop to the underground storage tanks. The pump is driven by a variable speed motor and is constructed of 304L stainless steel. The slurry pump is designed to generate high pressures to alleviate the possibility of a transfer line plugging.

Interlocks control the operation of the slurry pump. The slurry pump (P-B-2) is shutdown if any of the following occur:

- Excessive pressure is detected in the slurry lines to 241-AW Tank Farm
- A leak is detected in the secondary containment or cleanout boxes (COB) (COB-AW-1 and COB-AW-2) located on the slurry transfer lines
- A leak is detected in the 241-AW Tank Farm process pits where the transfer lines enter the DST System.

The slurry pump uses a shaft seal with recycled process condensate (or water) and pressure and flow controls similar to the system described above for the recirculation pump.

Transfer pipelines are 2-inch diameter, carbon steel encased lines which route slurry to a designated underground DST within the 200 East Area. All transfer pipelines are encased in a secondary containment pipe and equipped with leak detectors between the primary and encasement piping. The

pipelines are sloped to drain to the valve pit. The detection of any leak automatically shuts off the slurry pump.

The flow rate of the slurry transfer to the DST System is monitored and a decrease in flow below a specified value automatically will shut down the slurry pump (P-B-2) and initiate a line flush with water. The objective of flushing the transfer line is to prevent settling of solids, which precludes plugging the slurry transfer lines.

Samples can be taken from the slurry line when needed via a sampler (SAMP-F-2) that is located near the feed sampler in the loadout and hot equipment storage room.

4.1.1.2 Condensate Collection Tank (C-100) and Ancillary Equipment

The following section discuss the condensate collection tank (C-100) and ancillary equipment. This equipment collects process condensate via the condensers in the vacuum condenser system, filters the condensate, removes additional radionuclides, if necessary, and pumps the process condensate to LERF. Figure 4-4 provides a simplified process flow diagram showing the major components of the process condensate system. The following major components make up the process condensate system:

- Vacuum condenser system
- Condensate collection tank (C-100)
- Process condensate pump (P-C-100)
- Condensate filters (F-C-1, F-C-2, and F-C-3)
- Ion exchange column (IX-D-1)
- Radiation monitoring and sampling system (RC-3)
- Seal pot
- Condensate Recycle System.

Vacuum Condenser System. Vapors removed from the vapor-liquid separator flow to a series of three condensers where the vapors are condensed using raw water. Condensate drains to the condensate collection tank (C-100). The vacuum condenser system consists of the following major components:

- Primary condenser (E-C-1)
- Intercondenser (E-C-2)
- Aftercondenser (E-C-3)
- Steam jet ejectors (J-EC1-1 and J-EC2-2).

Figure 4-5 provides a simplified process flow diagram showing the major components of the vacuum condenser system. These system components are discussed in the following sections.

Primary Condenser (E-C-1). The vapors drawn from the vapor-liquid separator flow through the 42-inch vapor line into the E-C-1 condenser where the majority of the condensation takes place. Noncondensed vapors exit to the intercondenser (E-C-2) while the condensed vapors (process condensate) drain to the condensate collection tank (C-100). Cooling water passes through the cooling tubes and exits to TEDF.

The carbon steel condenser shell measures approximately 5.3 meters long and has a 2.2 meter inside diameter. The condenser consists of 2,950 equally spaced carbon steel tubes that are 3.6 meters long with a 1.9 centimeter outside diameter.

Intercondenser (E-C-2). Noncondensed vapors from E-C-1 enter the intercondenser. The vapor stream contacts the cooling tubes in the condenser where cooling water provides additional condensation. The condensate drains to the condensate collection tank (C-100). Noncondensed vapors and used cooling water are routed to the aftercondenser.

The carbon steel intercondenser measures 2.2 meters long with a 0.39 meter inside diameter. This heat exchanger contains 144 tubes that are 1.7 meters long with a 1.9 centimeter outside diameter.

Aftercondenser (E-C-3). Vapor discharged from the intercondenser enters the aftercondenser. Cooling is supplied to the aftercondenser by the cooling water from the intercondenser. Condensate is routed to the condensate collection tank (C-100), while the noncondensed vapors are filtered, monitored, and discharged to the atmosphere through the vessel ventilation system. The cooling water is discharged to TEDF.

The carbon steel aftercondenser measures 2.3 meters long and has a 0.20 meter inside diameter. This heat exchanger contains 45 tubes that are 1.8 meters long with a 1.9 centimeter outside diameter.

Steam Jet Ejectors. The vacuum that draws the vapors from C-A-1 into the condensers is created by a two-stage steam jet ejector system. The first-stage jet ejector (J-EC1-1) maintains a vacuum on the primary condenser, which in turn creates a vacuum on the vapor-liquid separator. The ejector consists of a steam jet, pressure controller, and air bleed-in valve. Steam and noncondensed vapors from the primary condenser are ejected from J-EC1-1 into the intercondenser. The desired vacuum is obtained by controlling steam pressure and bleeding ambient air as necessary into the vapor header through an air intake filter. The second-stage jet ejector (J-EC2-1) creates the vacuum that moves vapors from the intercondenser through the aftercondenser.

Condensate Collection Tank (C-100). Process condensate from the primary condenser, intercondenser, aftercondenser, and the vessel ventilation system drain to the condensate collection tank (C-100). The tank is 4.3 meters in diameter, 5.8 meters high, and is constructed of 0.79-centimeter-thick stainless steel. The tank has a maximum design capacity of 67,400 liters. Normal operating volume is approximately 50 percent of the tank capacity. A carbon steel base supports the tank. An agitator is installed but not used while pumping process condensate to LERF.

In the event of a tank overflow, the solution is routed through an overflow line to the drain system, which returns waste to the feed tank (241-AW-102). Overflow occurs when the volume exceeds about 60,600 liters. The overflow line is equipped with a liquid filled trap to isolate the drain system from the tank.

The potential exists for the condensate collection tank to receive small amounts of immiscible organics with the condensed waste. There is instrumentation installed on the condensate collection tank to detect a separate organic phase based on interface density at the surface of the waste in the tank. If detected, the organic is removed by overflowing tank C-100 back to the feed tank 241-AW-102. In addition, the liquid level in the tank is controlled well above the discharge pump intake point to ensure that an organic layer cannot be pumped to LERF.

Process Condensate Pump. A pump (P-C-100) moves the process condensate from tank C-100 through the condensate filter and the ion exchange column (if in service) to LERF. The process condensate pump is a centrifugal pump constructed of 316 stainless steel.

Condensate Filters. After leaving the condensate collection tank, the process condensate is filtered to remove solids. The primary condensate filter (F-C-1) has a welded steel housing. A second filter system (F-C-3), installed downstream of the ion exchange column, is also used to filter the process condensate. This system has duplex in-line filters in a cast iron housing. Only one of the filters is used at a time. Both filters employ a filter material that is compatible with the process condensate.

Ion Exchange Column. Ion exchange column (IX-D-1) is available to reduce the cesium and strontium content in the process condensate if necessary. The determination whether the column is needed is made before the start of a campaign based on the evaluation of the expected radionuclide levels in the process condensate using candidate feed tank data.

The ion exchange column is 1.2 meters in diameter and 4.9 meters high. The shell is 0.95 centimeters thick, A-36 carbon steel.

Clinoptilolite is used as the ion exchange media. Clinoptilolite is a zeolon material, which is a family of inorganic crystalline aluminosilicate compounds (Table 4-1). Clinoptilolite fines could cause partial plugging of the bed and an increase in the column differential pressure, restricting the flow of condensate. The column can be backflushed with process condensate or raw water to remove the fines. Spent ion exchange media is flushed to the feed tank (241-AW-102). Interlocks shutdown the process condensate pump if excessive differential pressure is detected across the column or across the upper or lower screens that hold the clinoptilolite in the column.

Radiation Monitoring and Sampling. The process condensate transferred to LERF is monitored continuously for radiation. If radiation levels exceed established limits, an alarm is received and interlocks immediately divert the stream back to the condensate collection tank (or the feed tank) and shut off the process condensate pump. This ensures process condensate containing excessive radionuclides due to an accidental carryover from the vapor-liquid separator is not transferred to LERF.

Seal Pot. The condensate collection tank receives condensed liquids from the vessel ventilation system. A seal pot collects the drainage before discharge into the condensate collection tank and isolates the tank from the vessel ventilation system.

Condensate Recycle System. For waste minimization, a portion of the process condensate from tank C-100 is recycled for use as decontamination solution for the deentrainment pad sprays and seal water for the recirculation pump (P-B-1) and slurry pump (P-B-2). Use of process condensate instead of raw water results in approximately 10 percent reduction in waste volume generated during continuous operation of the 242-A Evaporator. Raw water also is available as a backup for sprays and seal water. A 2-inch diameter carbon steel line, stainless steel centrifugal pump (P-C106), and filters (F-C-5 and F-C-6) supply process condensate from tank C-100 to the pad sprays and pump seals. The filters are disposable cartridge filters in carbon steel housings arranged in parallel with one filter in service while the other is in standby.

4.1.2 Integrity Assessments [D-2a(2)]

The IAR (Appendix 4B) discusses:

- The standards used during design and construction of the 242-A Evaporator and the adequacy of those standards
- The characteristics of the DST waste processed
- The adequacy of the materials of construction to provide corrosion protection from the waste processed
- The age of the tanks and the affect of age on tank integrity
- The results of the leak tests, visual inspections, and tank wall thickness inspections
- The frequency and scope of future integrity assessment
- Deficiencies in secondary containment design. These deficiencies are discussed in Section 4.1.5.

The integrity assessment was certified by an independent, qualified registered professional engineer.

The inspections, tests, and analyses performed provide assurance that the 242-A Evaporator tank system has adequate design, sufficient structural strength, and sufficient compatibility with the waste to not collapse, rupture, or fail during operation. No evidence of degradation was noted during the visual test, ultrasonic test, or leak test. Both condensate collection tank C-100 and the vapor-liquid separator/reboiler loop passed leak tests. Based on the results of the integrity assessment, an assessment frequency of 5 years or 8,000 hours of operation has been established.

4.1.3 Additional Requirements for Existing Tanks [D-2a(3)]

The requirements of this section, including measuring tank wall thicknesses, evaluating corrosion protection, and performing leak tests, have been discussed in Section 4.1.2 and the IAR.

4.1.4 Secondary Containment and Release Detection for Tank Systems [D-2b]

This section describes the design and operation of secondary containment sumps, drain lines, and leak detection systems for the 242-A Evaporator.

4.1.4.1 Requirements for All Tank Systems [D-2b(1)]

The *Construction Specification for 242-A Evaporator-Crystallizer Facilities Project B-100* (Vitro 1974) was used during preparation, design, and construction of the tank and secondary containment systems. Table 2 of the IAR details how the construction specification relates to the national codes and standards.

Constructing the building and vessels per this specification ensures that foundations are capable of supporting tank and secondary containment systems and that uneven settling and failures from pressure gradients do not occur. The IAR states that the 242-A Evaporator "...has adequate design, sufficient structural strength, and sufficient compatibility with the wastes to not collapse, rupture, or fail during service loads associated with normal operations" and "...the building structure was designed and constructed to withstand a design basis earthquake".

Section 2.2.7 of the IAR describes the building and secondary containment system. This system is designed to ensure any release is detected within 24 hours. The secondary containment system also is designed to contain 100 percent of the maximum operating capacity of the vapor-liquid separator/reboiler loop, and the drain systems are sloped to allow collection of solution and have sufficient capacity to drain this volume in less than the required 24 hours.

Section 2.2.7 of the IAR describes the protective coating material and sealant used to protect concrete and joints from attack by leaks to the secondary containment. The materials of construction for the sump and drain lines are also compatible with the waste processed at the 242-A Evaporator.

4.1.4.2 242-A Building Secondary Containment

The 242-A Building serves as a secondary containment vault for the vapor-liquid separator (C-A-1), condensate collection tank (C-100), and ancillary equipment used for transferring mixed waste at the 242-A Evaporator. The concrete for the operating area was poured to form a monolithic structure. Where needed, joints in the concrete were fabricated with preformed filler conforming to the standards of the American Society of Testing and Materials. Joint filler is sealed with a polysulfide sealant per the requirements of the construction specifications (Vitro 1974).

Before restart in 1994, a new acrylic special protective coating was applied to the concrete in the pump, evaporator, and condenser rooms. The coating meets the requirements of the construction specifications (Vitro 1974), including resistance to very high radiations doses, temperatures of 77°C, and spills of 25 percent caustic solution.

The following five rooms contain equipment used to process mixed waste:

- Pump room
- Evaporator room
- Condenser room
- Ion exchange room
- Loadout and hot equipment storage room.

4.1.4.2.1 Pump Room

The pump room secondary containment walls are 0.38- to 0.56-meter-thick reinforced concrete. The secondary containment floor is 0.51-meter-thick reinforced concrete. The pump room floor is lined with 0.64-centimeter stainless steel and the concrete walls and ceiling coverblocks are painted with a special protective coating. The pump room contains pipe jumpers used to transport feed and slurry solutions between the vapor-liquid separator and the DST System, and the process recirculation loop, recirculation pump (P-B-1), and slurry pump (P-B-2).

Leaks in the pump room collect in the pump room sump, a 1.5-meter by 1.5-meter by 1.8-meter deep sump with a 0.64-centimeter stainless steel liner. The pump room sump collects spills from various sources for transfer to the feed tank, 241-AW-102. Figure 4-6 provides a simplified process flow schematic of sources which drain to the pump room sump. Drainage to the sump includes:

- Leaks to the pump room floor from equipment in the pump room
- Evaporator room floor drain
- Loadout and hot equipment storage room floor drain
- Loading room floor drain
- Decontamination room sump drains (including feed and slurry sampler drains)
- Raw water backflow preventer drain.

Solution in the pump room sump is transferred to the feed tank (241-AW-102) using a steam jet. A 10-inch secondary containment overflow line is provided for draining large volumes of solution should a catastrophic tank failure occur. Because the overflow line provides a direct path between the air space of tank 241-AW-102 and the pump room, a minimum level of water must be maintained in the sump to prevent cross ventilation. A leak into the pump room sump would be detected by a rise in the sump level. Instrumentation is provided that alarms on high sump level.

The recirculation and slurry pumps in the pump room are equipped with mechanical seals having pressurized water introduced between the seals. The seal water is maintained at a pressure that exceeds the process pressure at the seal to ensure water leaks into the process solution, but waste solution does not leak out. Water from seal leakage is collected in funnels in the pump room and routed to feed tank 241-AW-102 via the 10-inch overflow line described previously.

4.1.4.2.2 Evaporator Room

The evaporator room secondary containment walls are 0.56-meter-thick reinforced concrete. The secondary containment floor is 0.51-meter-thick reinforced concrete. The evaporator room contains the vapor-liquid separator vessel (C-A-1), part of the recirculation loop, the reboiler, the 42-inch vapor line, and line used to empty the vapor-liquid separator to feed tank 241-AW-102.

Leaks in the evaporator room flow to a floor drain that routes through a 3-inch line to the pump room sump described in Section 4.1.4.2.1. A leak in the evaporator room would be detected by a rise in the pump room sump level. The floor of the evaporator room and a portion of the pump room floor are 3.0 meters below grade to contain the entire contents of the vapor-liquid separator, reboiler, and recirculation loop in the event of a catastrophic failure. The floor and walls of the evaporator room up to an elevation of 1.8 meters are painted with a special protective coating.

4.1.4.2.3 Condenser Room

The condenser room secondary containment walls are 0.36- to 0.56-meter-thick reinforced concrete. The secondary containment floor is 0.51-meter-thick reinforced concrete. The condenser room contains all the components of the process condensate system described in Section 4.1.1.2, including tank C-100. The exception is the ion exchange column, which is located in a separate room.

Leaks in the condenser room flow to two floor drains that join and route through a 6-inch line to feed tank 241-AW-102. Leaks in the condenser room are detected by the following:

- Unexpected changes in liquid level in tank C-100. Instrumentation is provided to monitor liquid level in the tank, including high- and low-level alarms.
- Daily visual inspections of process condensate system components and piping.

The floor and walls of the condenser room up to an elevation of 1.2 meters are painted with a special protective coating.

4.1.4.2.4 Ion Exchange Room

The ion exchange room secondary containment walls are 0.30-meter-thick reinforced concrete. The secondary containment floor is 0.13-meter-thick-reinforced concrete. The room contains the ion exchange column (IX-D-1), which could be used to provide further radionuclide decontamination of the process condensate. The room also contains a line to empty the column to tank 241-AW-102. This double-encased line leaves the building and combines with the pump room sump overflow line.

Leaks in the ion exchange room flow to a floor drain that connects with the condenser room drain line routed to feed tank 241-AW-102. Leaks are detected by opening the hatch between the condenser room and the ion exchange room daily when the ion exchange column is in service and performing a visual inspections of the piping and floor drain. The floor, walls, and ceiling of the room are completely painted with a special protective coating.

4.1.4.2.5 Loadout and Hot Equipment Storage Room

The loadout and hot equipment storage room secondary containment walls are 0.30- to 0.56-meter-thick reinforced concrete. The secondary containment floor is 0.15-meter-thick reinforced concrete. The room contains two recirculation lines and samplers used to sample the feed and slurry streams. The lines and samplers are located in a shielded enclosure adjacent to the pump room wall.

The loadout and hot equipment storage room contains two sumps: the drain sump and decontamination sump. The sumps are 0.91 meter in diameter, about 1.2 meters deep, and lined with stainless steel. Both sumps drain via a 3-inch drain line to the pump room sump described in Section 4.1.4.2.1. The sumps, floor, and walls of the loadout and hot equipment storage room up to an elevation of 3.8 meters are painted with a special protective coating.

Leaks in the sampler piping flow into two drains in the sample enclosure, which drain via a 2-inch line to the decontamination sump, which drains to the pump room sump (described in 4.1.4.2.1). Leaks in the sampler piping would be detected by leak detectors in the sampler enclosures or a rise in the pump room sump level.

4.1.4.2.6 242-A Building Drain Lines

Figure 4-6 provides a simplified process flow schematic of sources routed to the 242-A Building drain lines. Three lines serve to drain the 242-A Building and equipment to feed tank 241-AW-102:

- Pump room sump drain line (DR-334): a 10-inch carbon steel line that transfers overflow and empty-out of the pump room sump
- Vapor-liquid separator vessel drain line (DR-335): a 10-inch carbon steel line that allows gravity drain of the vessel to the feed tank
- Condenser room drain line (DR-343): a 6-inch carbon steel line that drains leakage from the condenser room and ion exchange room.

In addition, the ion exchange column drain has a separate drain line (DR-338) that also routes process condensate that has been diverted because of high radiation levels. This 3-inch carbon steel line exits the building and connects with the pump room sump drain line (DR-334) outside of the building.

The three lines are sloped to drain about 170 meters to feed tank 241-AW-102 via the drain pit (241-AW-02D). Although WAC 173-303-640(1)(c) exempts systems that serve as secondary containment from requiring secondary containment, drain lines DR-334, DR-335, and DR-338 have outer encasement piping.

The drain lines are connected to a cathodic protection system to prevent external corrosion from contact with the soil. The cathodic protection system consists of:

- A rectifier that converts supplied alternating current voltage to an adjustable direct current voltage
- Numerous anodes buried near the underground piping and connected to the rectifier.
- Return wiring that connect the piping to the rectifier, completing the circuit.

The rectifiers are inspected to component degradation has not occurred. Test stations along the system are checked annually to verify 0.85 volt is maintained on the system, as required by the National Association of Corrosion Engineers. These inspections are discussed in Chapter 6.0, Section 6.2.2.4.

4.1.4.3 Transfer Line Containment

This section describes the design and operation of secondary containment and leak detection systems for transfer lines between the DST System and the 242-A Evaporator. The transfer line for process condensate to LERF also has secondary containment and a leak detection system (DOE/RL-97-03). The transfer lines are protected with the same cathodic protection system described in Section 4.1.4.2.6.

4.1.4.3.1 Feed Line Piping

Two feed lines (SN-269 and SN-270) (one in service and one spare), each consist of 3-inch transfer piping within a 6-inch secondary containment encasement piping. Both the transfer and encasement pipes are constructed of Schedule 40 carbon steel. The lines run below grade about 120 meters from pump pit 241-AW-02E (above feed tank 241-AW-102) to the 242-A Building.

To detect transfer piping failures, leak detector risers equipped with conductivity probes are installed on the encasement lines. The transfer piping and encasements are sloped towards the conductivity probe, which, on leak detection, annunciates an alarm in the 242-A Evaporator control room. A valve in the pump pit (241-AW-02E) can be opened to drain solution from the encasement pipe into the pit, which drains to feed tank 241-AW-102.

4.1.4.3.2 Slurry Line Piping

The slurry pump (P-B-2) transfers solution through one of two transfer lines: SL-167, for transfer to valve pit 241-AW-B (standard configuration), or SL-168 for transfer to valve pit 241-AW-A (alternate configuration, presently out of service). Slurry solution can be routed via double-encased piping from these valve pits to any designated DST slurry receiver. Both slurry transfer lines consist of 2-inch transfer piping within a 4-inch secondary containment encasement piping. Both the transfer and encasement pipes are constructed of Schedule 40 carbon steel. The lines run below grade about 73 meters between the 242-A Building and the valve pits.

These slurry lines contain leak detector risers and conductivity probes similar to the feed line piping described in Section 4.1.4.3.1.

Each slurry line has four COBs located along their length. The COBs were installed to allow the introduction of a 'water snake' to dislodge plugs in the slurry line. Because of difficulties encountered in their use and the low frequency with which plugging occurs, the COBs are no longer used; however, the COBs still form part of the primary containment for the slurry transfer lines. Each COB has three 1-inch carbon steel lines. Two lines are connected to the slurry line for cleanout, while a third line connects via a 2-inch encasement pipe to the feed transfer line for drainage. The three lines extend to sealed flanges at ground level.

Secondary containment for each COB is provided by a 0.63-centimeter-thick carbon steel plate caisson (measuring 0.6 meter in diameter and 0.6 meter high) mounted on a 0.3 meter diameter carbon steel riser. Each caisson has a flange cover and vent line to prevent pressure buildup in the secondary confinement air space.

To drain liquids that might collect in the COB secondary containment, a 1-inch diameter floor drain line and valve are provided. When the drain valve is opened, solution in the COB drains to the slurry line secondary containment encasement piping. Leaks are detected by a conductivity probe mounted to the floor of the COB, which annunciates in the 242-A Evaporator control room.

4.1.4.4 Additional Requirements for Specific Types of Systems [D-2b(2)]

This section addresses additional requirements in WAC 173-303-640 for vault systems like the 242-A Building to ensure no buildup of ignitable vapors nor infiltration of precipitation occurs. This section also addresses secondary containment for ancillary equipment and piping associated with the tank systems.

4.1.4.4.1 Vault Systems [D-2b(2)(a)]

The 242-A Building is a vault constructed partially below ground, providing secondary containment for the tank systems. The DST System waste processed at the 242-A Evaporator is designated ignitible and reactive because of the presence of nitrite and nitrate salts, which are considered oxidizers per 49 CFR 173. Because of their low volatility, these compounds are unlikely to be present in the vapor phase of the tank systems at the 242-A Evaporator. However, to prevent the spread of contamination, the vapor-liquid separator (C-A-1) is ventilated and maintained at lower air pressure than the building air space. This ensures air leakage is from uncontaminated building air space into the tank vapor space. Vapors from the vapor-liquid separator flow to the vacuum condenser system described in Section 4.1.1.2.

The condensate collection tank (C-100), collects process condensate that is not designated ignitible nor reactive.

The tank systems and ancillary equipment are located within the 242-A Building, which is completely enclosed to prevent run-on and infiltration of precipitation into the secondary containment system.

4.1.4.4.2 Ancillary Equipment [D-2b(2)(c)]

The 242-A Building provides secondary containment for ancillary equipment. Double containment is provided for the feed and slurry transfer lines between the 242-A Building and the AW Tank Farm by pipe-in-pipe arrangements. Therefore, all ancillary equipment has secondary containment and the daily inspection requirements in WAC 173-303-640(4)(f) are not applicable.

4.1.5 Variances from Secondary Containment Requirements [D-2c]

Section 7.2 of the IAR discusses the following three deficiencies associated with the secondary containment system:

Pump Room Sump. The pump room sump does not comply with secondary containment requirements because liquid must be kept in the sump to provide a seal to prevent airflow between the pump room and feed tank 241-AW-102. Although the sump has a 0.63-centimeter-thick stainless steel liner to prevent corrosion of the concrete floor, the sump does not have secondary containment.

Routine Discharges through Secondary Containment. The configuration of the 242-A Evaporator process requires routine, batch discharges of dangerous waste through secondary containment drain lines. These routine discharges include the following.

- Steam condensate, cooling water, and process condensate sample stations drain to the feed tank, 241-AW-102, through drain line DR-343. Total discharge is about 38 liters per month during operation.
- Sample bottle water spray down in the feed and slurry sample stations drain to the decontamination sump in the loadout and hot equipment storage room. The decontamination sump then drains to the pump room sump. Total discharge is about 76 liters per month during operation.
- Ion exchange column backflushed with water drains through line DR-338 to the feed tank 241-AW-102. Backflushes are performed as needed when the ion exchange column is in use.

Transfer Piping Wall Penetrations. Three dangerous waste transfer line piping sections passing through the 242-A Building wall are single-walled, i.e., no secondary confinement in the wall (about 56-centimeter-thick reinforced concrete).

These deficiencies were identified to Ecology in a presentation on October 28, 1993 and a letter response from Ecology was provided (Ecology 1993). The response stated, "No physical revision of the pipe wall penetrations or the floor drains in the evaporator pump room will be required prior to evaporator restart." The letter required the following.

- "If at any time leakage is seen or detected from either of these installations, or if for any reason these installations are repaired or rebuilt, they will be rebuilt or repaired in accordance with regulations."
- "Should a spill occur in the evaporator pump room, the sump and the piping shall be rinsed three times as required in WAC 173-303-160 as appropriate. "Appropriate" in this case means that the original regulation was written for a free container, not a sump, so that judgement will have to be used in the application of the regulation. The rinsate shall be transferred to the double-shell tanks."

4.1.6 Tank Management Practices [D-2d]

All waste to be processed at the 242-A Evaporator must be sampled to determine if the waste is compatible with the materials of construction at the 242-A Evaporator. Before each campaign, candidate feed tanks are sampled per the requirements of the waste analysis plan (Chapter 3.0, Appendix 3A). Based on the results, three possible options are implemented.

- The waste is acceptable for processing without further actions.

- The waste is unacceptable for processing as a single batch, but is acceptable if blended with other waste that is going to be processed.
- The waste is unacceptable for processing.

The 242-A Evaporator process is controlled by the MCS. The MCS computer monitors liquid levels in the vapor-liquid separator (C-A-1) and condensate collection tank (C-100) and has alarms that annunciate on high-liquid level to notify operators that actions must be taken to prevent overfilling of these vessels.

An interlock is activated when high-liquid level in the vapor-liquid separator (C-A-1) is detected, automatically shutting down the feed transfer pump at feed tank 241-AW-102, thereby preventing overfilling of the vessel and carryover of slurry into the process condensate system. The condensate collection tank (C-100) has an overflow line that routes solution to feed tank 241-AW-102 in case of overfilling.

Process and instrumentation drawings are provided in Appendix 4A.

4.1.7 Labels or Signs [D-2e]

A labeling upgrade was completed before restart in 1994 for tank C-100 to identify the waste contents and major risks associated with waste stored within the tank. Tank C-100 ancillary piping is labeled "PROCESS CONDENSATE" to alert trained personnel which pipes in the condenser room contain dangerous waste. The vapor-liquid separator (C-A-1) is located in the evaporator room, a normally unoccupied area. This area is posted as a high radiation area with access controlled and limited to trained personnel only. The tank labels are visible from the walls of the tank enclosure rooms, which are less than 15 meters from the tank systems; therefore, label visibility requirements are met.

4.1.8 Air Emissions [D-2f]

Tank systems that contain extremely hazardous waste that is acutely toxic by inhalation must be designed to prevent the escape of such vapors. The DST System waste in the vapor-liquid separator, C-A-1, is designated extremely hazardous waste; however, no determination has been performed to determine if the waste is acutely or chronically toxic. Most of the toxic compounds in the DST waste are not volatile, but because of the high radioactivity of the waste, controls are included to prevent or mitigate the release of tank vapors. The vapor-liquid separator is maintained under vacuum to ensure air leakage is from uncontaminated building air space into the tank vapor space. The boiling vapor in C-A-1 passes through deentrainment pads and sprays to prevent liquid and solid carryover into the vapor section of the tank. The vapor stream passes through three condensers that remove the condensable components. The noncondensable vapors pass through HEPA filters before being discharged to the environment.

4.1.9 Management of Ignitable or Reactive Wastes in Tank Systems [D-2g]

Although the DST System waste reprocessed at the 242-A Evaporator is designated ignitible because of the presence of oxidizers (nitrates and nitrites), the waste does not meet the definition of a combustible or flammable liquid given in National Fire Protection Association (NFPA) code number 30 (NFPA 1996). The buffer zone requirements in NFPA-30, which require tanks containing combustible or flammable solutions be a safe distance from each other and from public way, are not applicable.

An analysis is performed on the DST System waste to be processed to verify the waste does not react exothermically at the elevated temperatures at the 242-A Evaporator. The waste analysis plan (Chapter 3.0, Appendix 3A) discusses waste acceptance requirements due to reactive waste designation.

4.1.10 Management of Incompatible Wastes in Tank Systems [D-2h]

Data Quality Objectives for Tank Farm Waste Compatibility Program (WHC 1995a) was established to ensure that waste transferred within the DST System is compatible before mixing. Waste transferred to the 242-A Evaporator also must meet these requirements. Waste compatibility with tank system construction material is discussed in Section 4.3.3 of the IAR (Appendix 4B). The waste analysis plan (Chapter 3.0, Appendix 3A) also includes waste compatibility requirements.

4.2 AIR EMISSIONS CONTROL [D-8 and D-8a]

This section addresses the requirements of Air Emission Standards for Process Vents, under Subpart AA (incorporated by reference in WAC 173-303-690).

4.2.1 Applicability of Subpart AA Standards [D-8a(1)]

The 242-A Evaporator performs distillation that specifically requires evaluation of process vents for the applicability of 40 CFR 264 Subpart AA.

Waste processed at the 242-A Evaporator routinely contains greater than 10 parts per million organic concentrations; therefore, organic air emissions are subject to 40 CFR 264.1032, which requires organic emissions from all affected vents at the Hanford Facility be less than 1.4 kilograms per hour and 2.8 megagrams per year, or control devices be installed to reduce organic emissions by 95%. For a list of applicable vents at the Hanford Facility, refer to the General Information Portion (DOE/RL-91-28, Chapter 4.0).

The 242-A Evaporator has one process ventilation system that vents both the vapor-liquid separator (C-A-1) and the condensate collection tank (C-100). The vent lines from both tanks combine before entering an off-gas system consisting of a deentrainer, a prefilter/demister, HEPA filters, and an exhaust fan. The vessel vent off-gas system is located on the third floor of the condenser room, with the exhaust stack extending horizontally through the east wall of the building at an elevation of 14.7 meters above ground level. The exhaust stack bends to run vertically with the discharge point 18.6 meters above ground level.

The annual average flowrate for the vessel vent is given in *Radionuclide Air Emissions Report for the Hanford Site - Calendar Year 1995* (DOE-RL 1996) as 18 cubic meters per minute and the total annual flow was 9.6 E+06 cubic meters. During waste processing, the airflow is about 20.5 cubic meters per minute, with about 4.3 cubic meters per minute ventilated from tank C-100 and the remainder from the vapor-liquid separator and air inleakage.

Organic emissions occur during waste processing, which is less than 6 months (182 days) each year. This is the maximum annual operating time for the 242-A Evaporator, as shutdowns are required during the year for maintenance outages, candidate feed tank analysis, and establishing transfer routes for staging waste in the DST System. The total operating time for the two campaigns in 1994 was 86 days.

4.2.2 Process Vents - Demonstrating Compliance [D-8a(2)]

This section outlines how the 242-A Evaporator complies with the requirements of 40 CFR 264, Subpart AA, including a discussion of the basis for meeting the organic emission limits, calculations demonstrating compliance, and conditions for reevaluating compliance.

4.2.2.1 Basis for Meeting Limits/Reductions [D-8a(2)(a)]

The TSD units at the Hanford Facility subject to 40 CFR 264, Subpart AA meet the organic air emission limits of 1.4 kilograms per hour and 2.8 megagrams per year, established in 40 CFR 264.1032, by the design of the facility. The 242-A Evaporator and the other TSD units collectively can meet these standards without the use of air pollution control devices.

4.2.2.2 Demonstrating Compliance [D-8a(2)(b)]

Process vent organic air emissions are controlled by establishing limits for acceptance of waste at the 242-A Evaporator. Before startup of each campaign, the waste to be processed is sampled in the DST System to determine the organic content. If the concentrations of organic constituents are less than the limits in the waste analysis plan (Chapter 3.0, Appendix 3A), the waste can be processed, provided the Hanford Facility will not exceed 1.4 kilograms per hour and 2.8 megagrams per year. The waste acceptance limits in the waste analysis plan are based on equilibrium calculations and assumptions given in *Organic Emission Calculations for the 242-A Evaporator Vessel Vent System* (WHC 1996). The calculation to determine organic emissions consists of the following steps:

1. Determine the emission rate of each candidate feed tank organic constituent by multiplying the constituent concentration by the corresponding partition factor in *Organic Emission Calculations for the 242-A Evaporator Vessel Vent System* (WHC 1996).
2. Sum the emission rates of all organic constituents to determine the emission rate for the candidate feed tank. The maximum emission rate for the campaign is the rate from the candidate tank with the greatest emission rate.
3. Determine the total amount of emission during the campaign by using operating time and a weighted average emission rate, based on the volume of each candidate feed tank processed.

The organic emission rates and quantity of organics emitted during the campaign are determined using these calculations and are included in the operating record for each campaign, as required by 40 CFR 264.1035. The Hanford Facility has a system to ensure organic emissions from units subject to 40 CFR 264, Subpart AA are less than the limits of 1.4 kilograms per hour and 2.8 megagrams per year. Records documenting total organic emissions are available for Ecology review on request.

4.2.2.3 Reevaluating Compliance with Subpart AA Standards [D-8a(2)(d)]

Calculations to determine compliance with Subpart AA will be reviewed when any of the following conditions occur at the 242-A Evaporator:

- Changes in the configuration or operation that affect the assumptions given in *Organic Emission Calculations for the 242-A Evaporator Vessel Vent System* (WHC 1996).
- Annual operating time exceeds 182 days.

4.3 WASTE MINIMIZATION [D-9]

Waste minimization is discussed in Chapter 10.0.

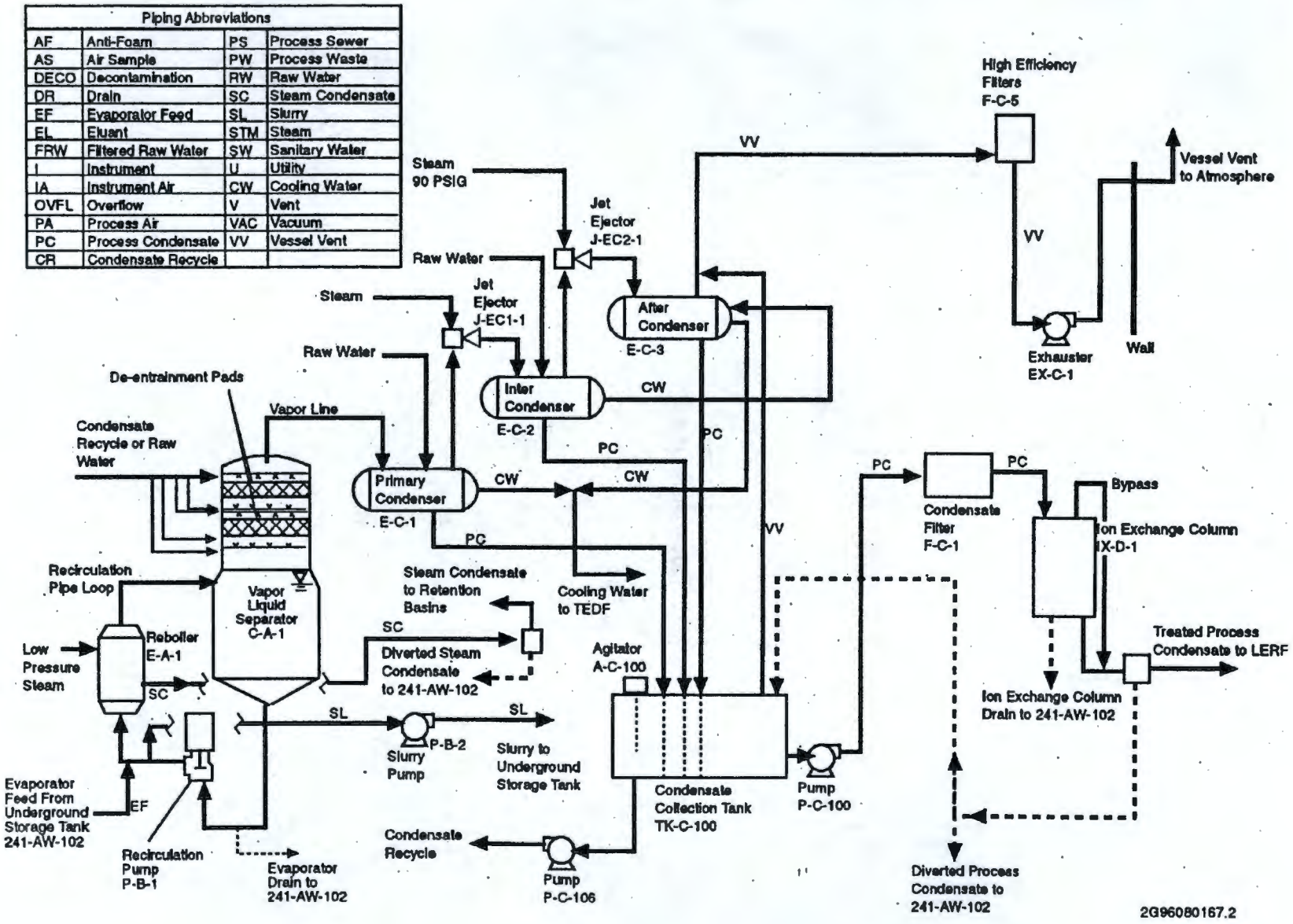

Figure 4-1. 242-A Evaporator Simplified Process Flow Diagram.

AF	Anti-Foam	PS	Process Sewer
AS	Air Sample	PW	Process Waste
DECO	Decontamination	RW	Raw Water
DR	Drain	SC	Steam Condensate
EF	Evaporator Feed	SL	Slurry
EL	Eluant	STM	Steam
FRW	Filtered Raw Water	SW	Sanitary Water
I	Instrument	U	Utility
IA	Instrument Air	CW	Cooling Water
OVFL	Overflow	V	Vent
PA	Process Air	VAC	Vacuum
PC	Process Condensate	VV	Vessel Vent
CR	Condensate Recycle		

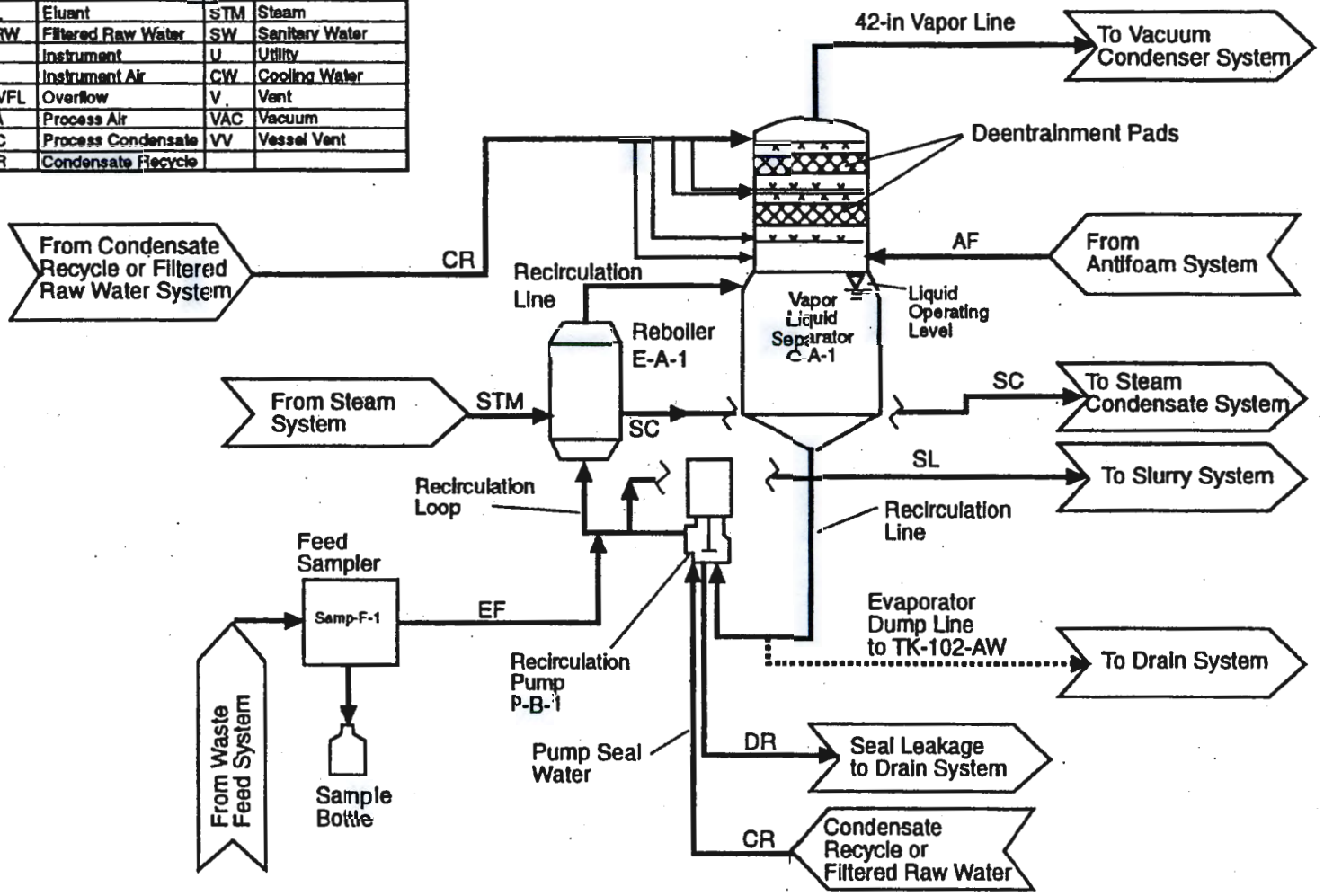

Figure 4-2. 242-A Evaporator Process Loop.

Piping Abbreviations			
AF	Anti-Foam	PS	Process Sewer
AS	Air Sample	PW	Process Waste
DECO	Decontamination	RW	Raw Water
DR	Drain	SC	Steam Condensate
EF	Evaporator Feed	SL	Slurry
EL	Eluant	STM	Steam
FRW	Filtered Raw Water	SW	Sanitary Water
I	Instrument	U	Utility
IA	Instrument Air	CW	Cooling Water
OVFL	Overflow	V	Vent
PA	Process Air	VAC	Vacuum
PC	Process Condensate	VV	Vessel Vent
CR	Condensate Recycle		

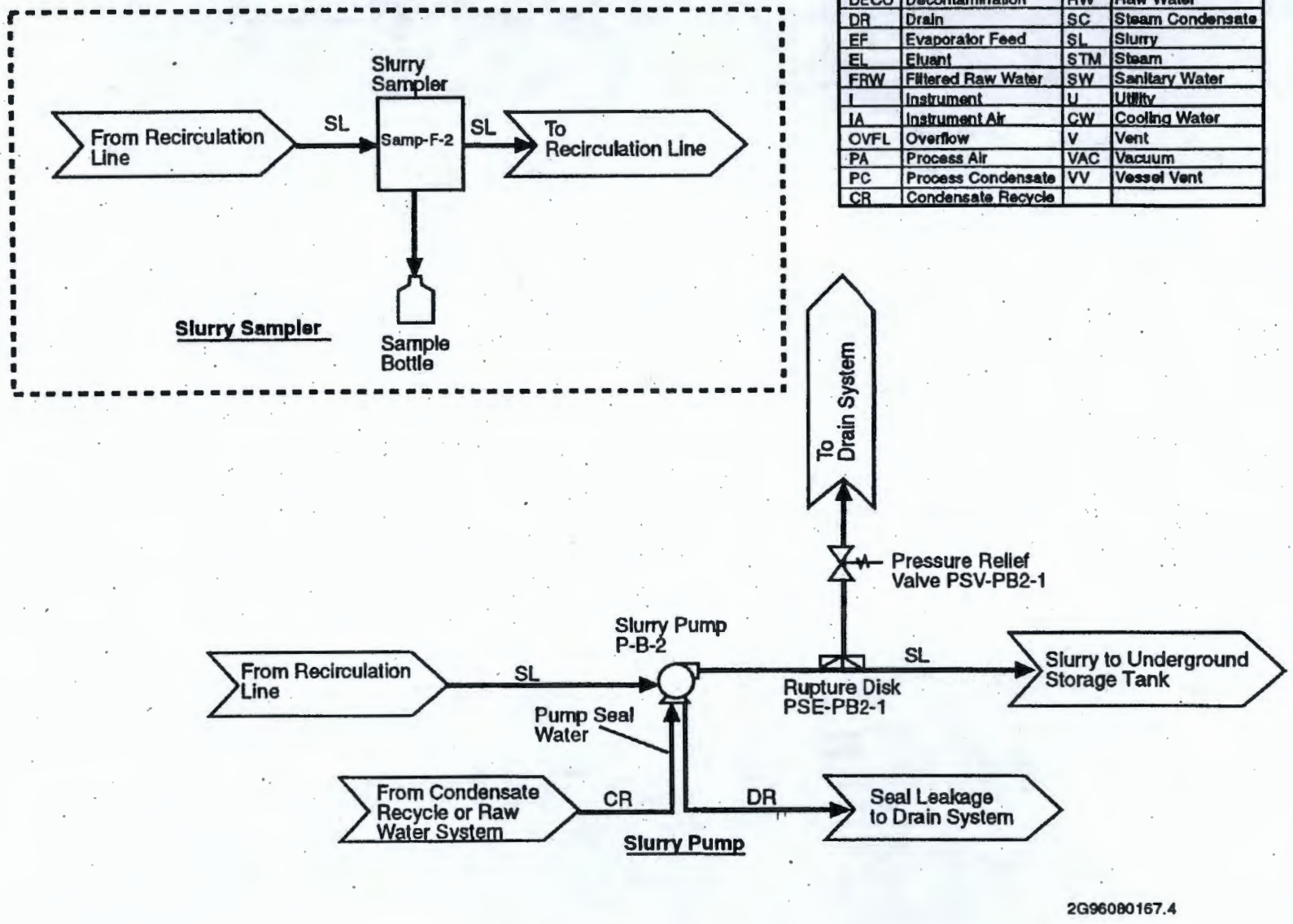

Figure 4-3. 242-A Evaporator Slurry System.

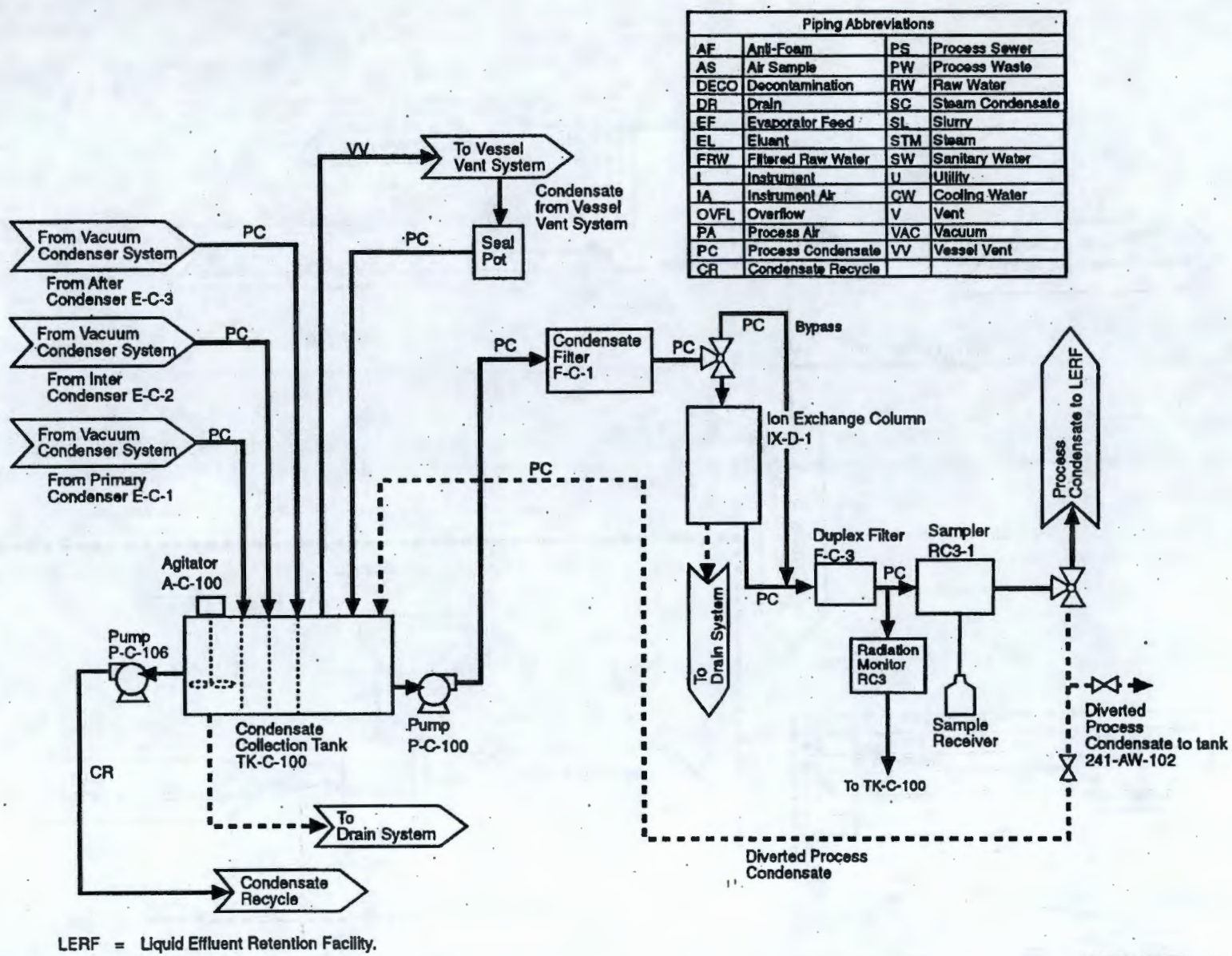

Figure 4-4. 242-A Evaporator Process Condensate System.

Piping Abbreviations			
AF	Anti-Foam	PS	Process Sewer
AS	Air Sample	PW	Process Waste
DECO	Decontamination	RW	Raw Water
DR	Drain	SC	Steam Condensate
EF	Evaporator Feed	SL	Slurry
EL	Eluant	STM	Steam
FRW	Filtered Raw Water	SW	Sanitary Water
I	Instrument	U	Utility
IA	Instrument Air	CW	Cooling Water
OVFL	Overflow	V	Vent
PA	Process Air	VAC	Vacuum
PC	Process Condensate	VV	Vessel Vent
CR	Condensate Recycle		

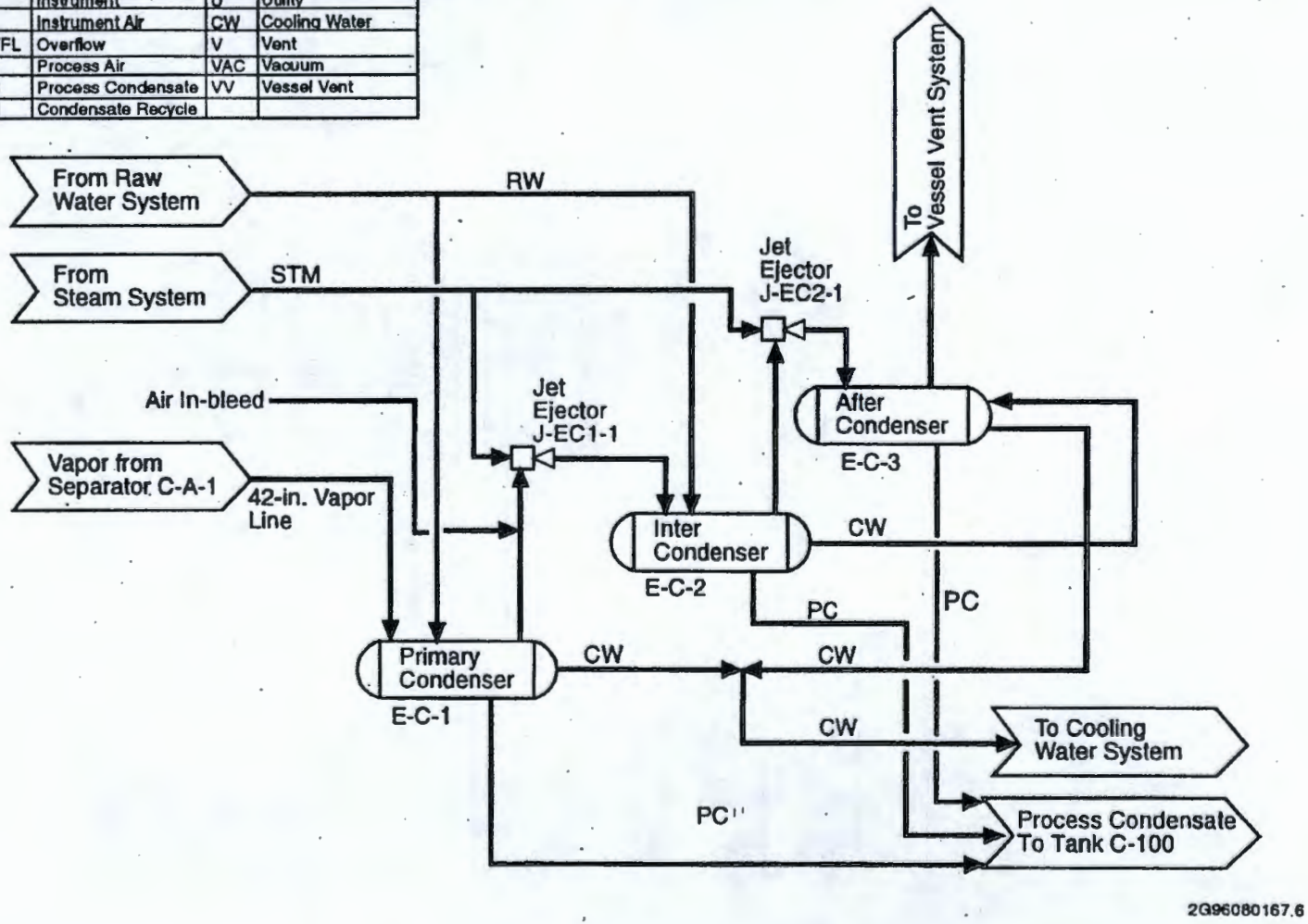

Figure 4-5. 242-A Evaporator Vacuum Condenser System.

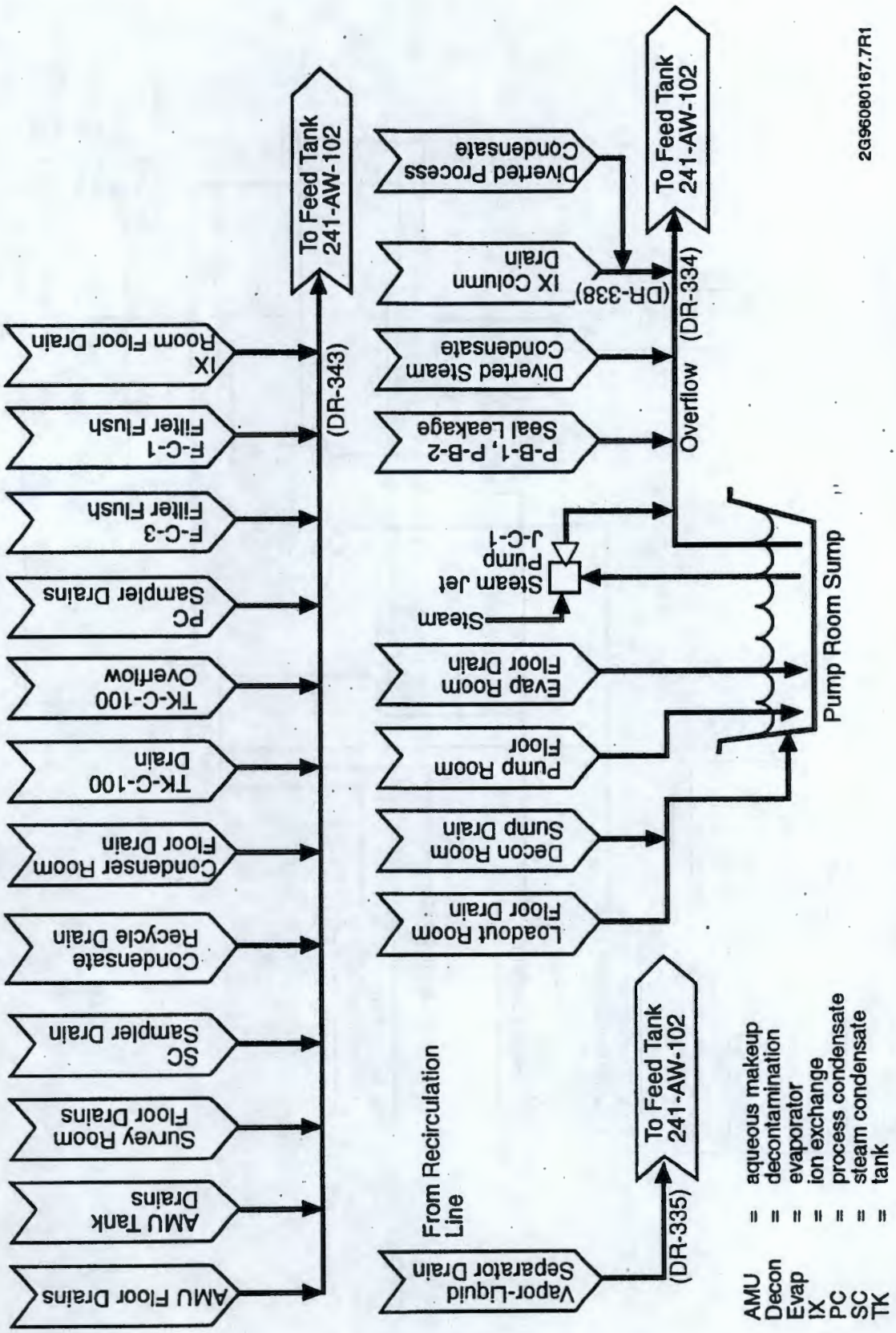

Figure 4-6. 242-A Evaporator Drain System.

Table 4-1. Chemical Composition of Clinoptilolite.

Components	Typical analysis percentage
SiO_2	72.2
Al_2O_3	12.9
CaO	0.8
MgO	0.5
Na_2O	3.7
K_2O	4.4
Fe_2O_3	0.7
MnO	0.024

This page intentionally left blank.

This plan covers the following buildings and structures:

242-A Building, 242-AB Building, 242-A-81 Water Service Building, 207-A Retention Basins.

Approved:

Building Emergency Director	9/7/99 Date
Emergency Preparedness	9-30-99 Date
Hanford Fire Department	9/28/99 Date
242-A Environmental Compliance Officer	10/6/99 Date

This document will be reviewed annually and updated if necessary by the Building Emergency Director unless Hanford Facility RCRA Permit coordination requirements provides otherwise. The document will be approved by the primary Building Emergency Director, and approved by the Manager of Emergency Preparedness (or delegate) and the Hanford Fire Department.

TABLE OF CONTENTS

1.0 GENERAL INFORMATION 1
1.1 Facility Name 1
1.2 Facility Location 1
1.3 Owner 1
1.4 Description of the Facility and Operations 1
1.5 Building Evacuation Routing 2

2.0 PURPOSE 2

3.0 BUILDING EMERGENCY ORGANIZATION 2
3.1 Building Emergency Director 5
3.2 Other Members 5

4.0 IMPLEMENTATION OF THE PLAN 5

5.0 FACILITY HAZARDS 6
5.1 Hazardous Materials 6
5.2 Industrial Hazards 6
5.3 Dangerous/Mixed Waste Hazards 7
5.3.1 Solid Form 7
5.3.2 Liquid Form 7
5.3.3 Gaseous Form 7
5.4 Radioactive Materials 7
5.5 Criticality 8

6.0 POTENTIAL EMERGENCY CONDITIONS 8
6.1 Operations Emergencies 8
6.1.1 Loss of Utilities 8
6.1.2 Major Process Disruption/Loss of Plant Control 10
6.1.3 Pressure Release 10
6.1.4 Fire and/or Explosion 10
6.1.5 Hazardous Material Spill or Release 11
6.1.6 Radioactive/Mixed Waste Spill 11
6.1.7 Transportation and/or Packaging Incidents 11
6.1.8 Radiological Material Release 11
6.1.9 Criticality 11
6.2 Natural Phenomena 11
6.2.1 Seismic Event 12
6.2.2 Ashfall/Snow Fall Roof Overloading 12
6.2.3 High Winds/Tornados 12
6.2.4 Flood 12
6.2.5 Range Fire 12
6.2.6 Aircraft Crash 12
6.3 Security Contingencies 13
6.3.1 Bomb Threat/Suspicious Object 13
6.3.2 Hostage Situation/Armed Intruder 13

6.3.3 Suspicious Object 13

7.0 INCIDENT RESPONSE 13
7.1 Protective Actions Responses 13
7.1.1 Evacuation 13
7.1.2 Take Cover 14
7.2 Response to Operations Emergencies 14
7.2.1 Loss of Utilities 15
7.2.2 Major Process Disruption/Loss of Plant Control 16
7.2.3 Pressure Release 17
7.2.4 Fire and/or Explosion 17
7.2.5 Hazardous Material, Dangerous and/or Mixed Waste Spills or Releases 18
7.2.6 Radiological Material Release 19
7.2.7 Criticality 20
7.3 Prevention of Recurrence or Spread of Fires, Explosions, or Releases 20
7.4 Response to Natural Phenomena 20
7.4.1 Seismic Event 21
7.4.2 Volcanic Eruption/Ashfall 21
7.4.3 High Winds/Tornados 22
7.4.4 Flood 22
7.4.5 Range Fire 22
7.4.6 Aircraft Crash 22
7.5 Security Contingencies 22
7.5.1 Bomb Threat/Suspicious Object 22
7.5.2 Hostage Situation/Armed Intruder 22
7.5.3 Suspicious Object 23

8.0 TERMINATION OF EVENT, INCIDENT RECOVERY, AND RESTART OF OPERATIONS 23
8.1 Termination of Event 23
8.2 Incident Recovery and Restart of Operations 23
8.3 Incompatible Waste 24
8.4 Post-Emergency Equipment Maintenance and Decontamination 24

9.0 EMERGENCY EQUIPMENT 25
9.1 Fixed Emergency Equipment 25
9.2 Portable Emergency Equipment 25
9.3 Communications Equipment/Warning Systems 26
9.4 Personal Protective Equipment 26
9.5 Spill Control and Containment Supplies 27
9.6 Emergency Response Center 27

10.0 COORDINATION AGREEMENTS 27

11.0 REQUIRED REPORTS 27

12.0 PLAN LOCATION 27

13.0 BUILDING EMERGENCY ORGANIZATION 28

14.0 REFERENCES 28

ATTACHMENT A Listing of Procedures and Guides 29

FIGURES

Figure 1, 242-A Evaporator Evacuation Routes 3
Figure 2, 242-A Evaporator Staging Areas 4

1.0 GENERAL INFORMATION

The 242-A Evaporator, which is part of the 200 Area Liquid Waste Processing Facilities (LWPF), is located on the Hanford Site, a 560-square-mile U.S. Department of Energy (DOE) site in southeastern Washington State. The 242-A Evaporator is located in the southeast portion of the 200 East Area near the center of the Hanford Site. The Hanford Site Emergency Preparedness Program is based upon the incident command system which allows a graded approach for response to emergency events. This plan contains a description of facility specific emergency planning and response. It is used in conjunction with DOE/RL-94-02, *Hanford Emergency Management Plan*. Response to events is performed using facility specific and/or site-level emergency procedures.

1.1 Facility Name: U.S. Department of Energy Hanford Site,
200 Area Liquid Waste Processing Facility,
242-A Evaporator.

1.2 Facility Location: Benton County, Washington; within the 200 East Area.

Buildings/facilities covered by this plan are:

242-A Building
242-AB Building
242-A-81 Water Service Building
207-A Retention Basins

1.3 Owner: U.S. Department of Energy
Richland Operations Office
825 Jadwin Avenue
Richland, Washington 99352

FACILITY MANAGER: Waste Management Federal Services of Hanford, Inc.
P.O. Box 700
Richland, Washington 99352

1.4 Description of the Facility and Operations

The 242-A Building is a five-story, concrete structure consisting of a main process area (i.e., pump room, load-out room, evaporator room, condenser room), support system area (i.e., aqueous makeup room, heating ventilation and air conditioning (HVAC) room, etc.), and the adjacent office area (i.e., lunch room, lavoratories, offices, etc.). The main process and support system areas are designed and constructed to withstand a 0.25 g horizontal acceleration seismic event, and a 100-mile-per-hour, high wind/tornado.

The 242-AB Building was constructed to house the upgraded 242-A Evaporator monitoring and control system. This building adjoins the 242-A Building and includes the control room (room 18) and electrical room (room 19).

The 207-A Retention Basins are located east of the 242-A Building, and north of the AP Tank Farm. The Water Service Building (242-A-81) is located directly south of the 242-A Building.

The 242-A Evaporator is connected to Double-Shell Tank (DST) system tanks and valve pits through underground piping that is used for transferring feed and slurry solutions and miscellaneous drainage.

There is a satellite accumulation area located south of the 242-A Building.

1.5 Building Evacuation Routing

Figure 1 shows 242-A Evaporator evacuation routes. Figure 2 shows 242-A Evaporator staging areas.

2.0 PURPOSE

This plan describes both the facility hazards and the impacts of upset and/or emergency conditions. "Emergency" as used in this document includes events meeting the Washington Administrative Code (WAC) 173-303 definition of Emergency as well as DOE-232.1, "Occurrence Reporting and Processing of Operations Information," categories of Unusual Occurrence and Emergency. These events include spills or releases, fires and explosions, transportation activities, movement of materials, packaging, storage of hazardous materials, and natural and security contingencies. When used in conjunction with DOE/RL-94-02, *Hanford Emergency Management Plan*, this plan meets the requirements for contingency planning as required by WAC 173-303.

3.0 BUILDING EMERGENCY ORGANIZATION

The 242A LWPF is staffed 24 hours each day, and is prepared to respond to emergencies through designated personnel with specific primary, on-call and alternate responsibilities. The 242-A Building Emergency Director (BED) directs the emergency response until the Incident Commander arrives at the event scene. The BED is on duty 24 hours each day. The on-duty Shift Operations Manager is the designated primary BED. There is a designated alternate BED on day shift available for directing emergency response if required. Other personnel required as part of the building emergency organization are also on duty with either primary or alternate responsibilities. The following paragraphs describe this organization and the duties of designated personnel.

Figure 1, 242-A Evaporator Evacuation Routes

RCT: radiation control technologist

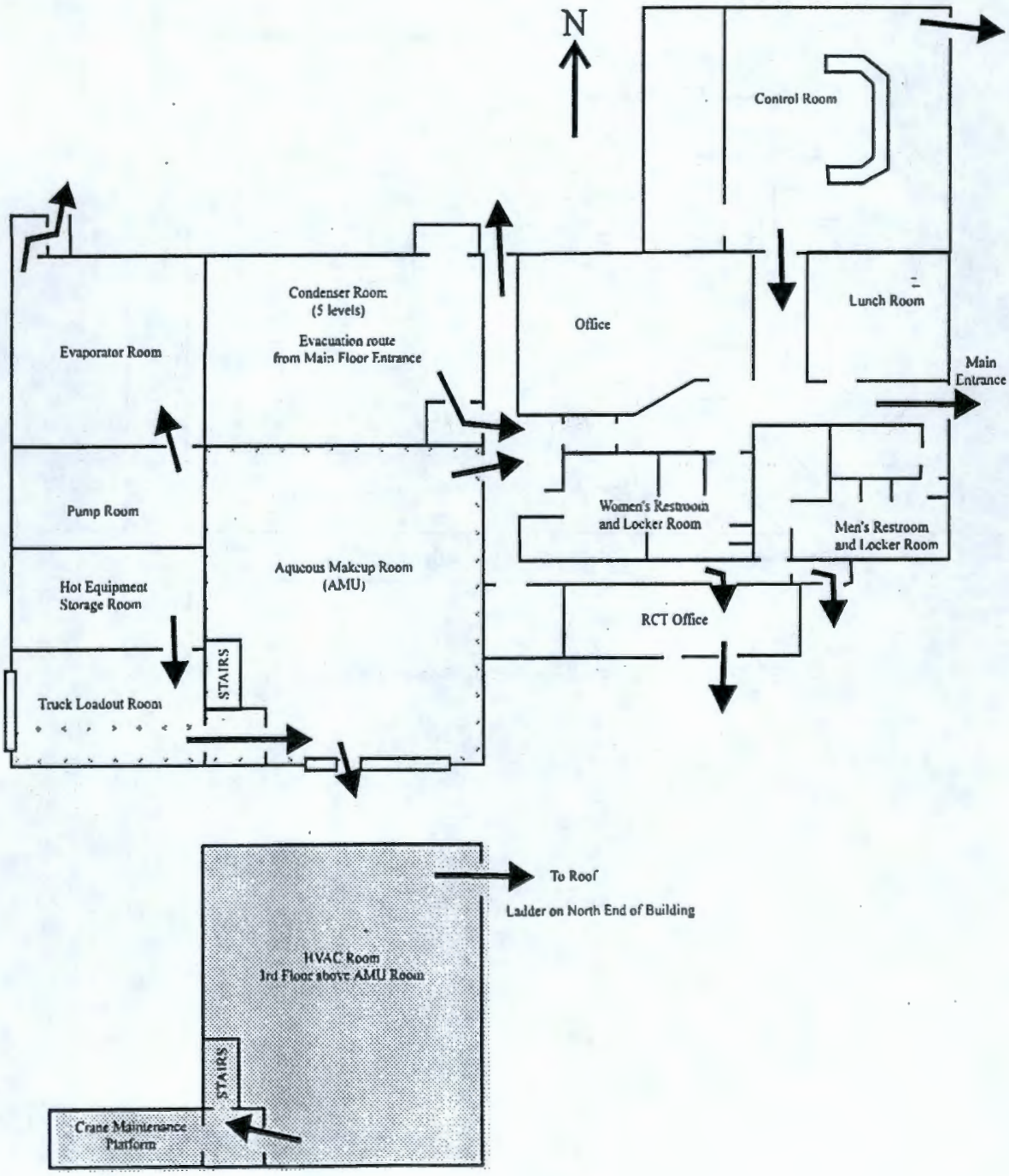

HVAC: heating, ventilation, and air conditioning

Figure 2, 242-A Evaporator Staging Areas

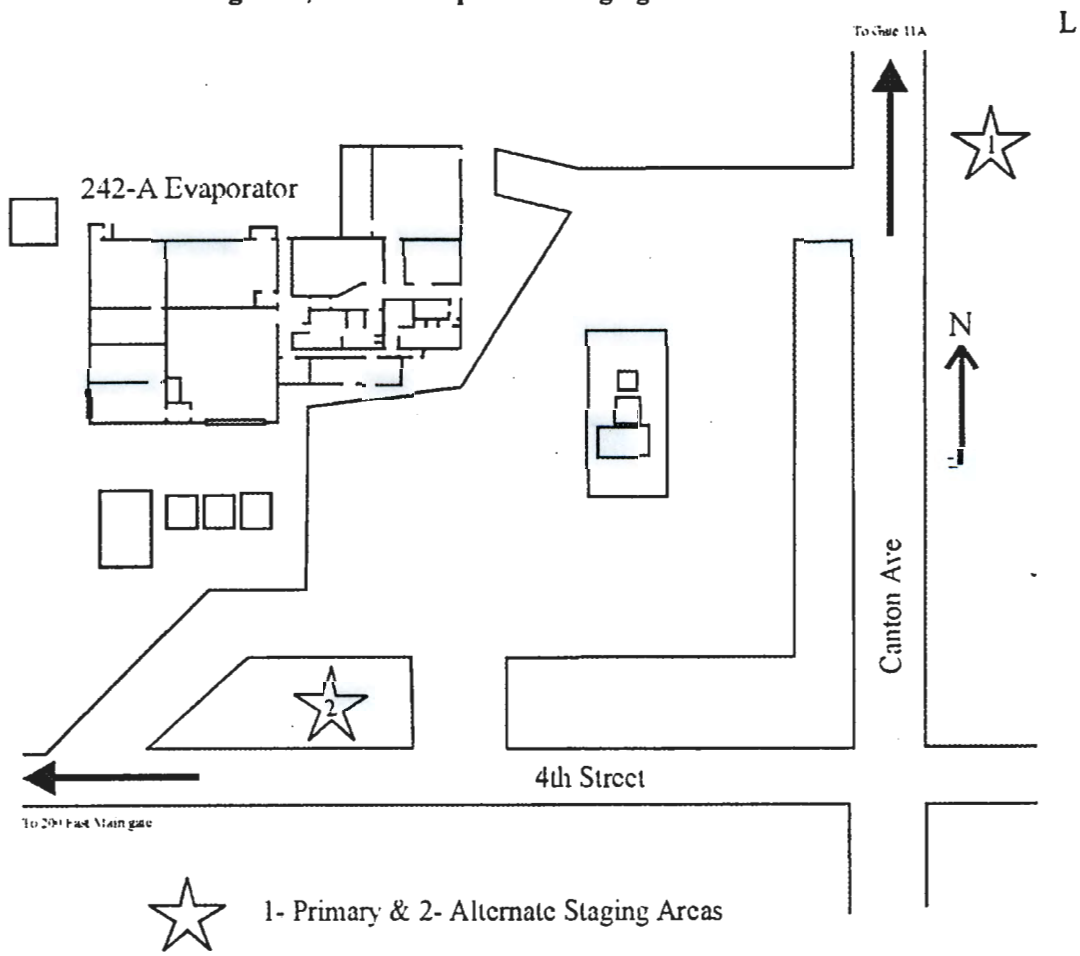

3.1 Building Emergency Director

Emergency response is directed by the Building Emergency Director (BED) until the Incident Commander arrives. The incident command system and staff with supporting on-call personnel fulfill the responsibilities of the Emergency Coordinator as discussed in WAC 173-303-360.

During events, facility personnel perform response duties under the direction of the BED. The Incident Command Post (ICP) is managed by either the senior Hanford Fire Department member present on the scene or senior Hanford Patrol member present on the scene (security events only). These individuals are designated as the Incident Commander (IC) and as such have the authority to request and obtain any resources necessary for protecting people and the environment. The BED becomes a member of the ICP and functions under the direction of the IC. In this role the BED continues to manage and direct facility operations.

A listing of the primary and alternate BEDs by title, work location, and work telephone numbers is contained in Section 13 of this plan. The BED is on the premises or is available through an "on-call" list 24 hours a day. Emergency Preparedness maintains a listing of BED names and work and home telephone numbers at the Patrol Operations Center (POC) in accordance with *Hanford Facility RCRA Permit*, Dangerous Waste Portion, General Condition II.A.4.

3.2 Other Members

As a minimum, the BED or designee appoints and trains individuals to perform as Personnel Accountability Aides and Staging Area Managers. The accountability aides facilitate the implementation of protective actions (evacuation or take cover) and the accountability of personnel after the protective actions have been implemented. Staging Area Managers coordinate/conduct activities at the staging area. Staging Area Managers and Personnel Accountability Aids are trained annually and are required to participate in two drills per year. In addition, the BED may identify additional support personnel (Radiological Control, Maintenance, Engineering, Hazardous Material Coordinators, etc.) to be part of the building emergency organization. Sections 13.0 of this plan discusses the location of information regarding positions, names, and telephone numbers. Copies are distributed to appropriate facility locations and to the Hanford Site Emergency Preparedness organization.

4.0 IMPLEMENTATION OF THE PLAN

To meet the requirements of WAC 173-303, this plan will be implemented when the BED has determined that a release, fire, or explosion involving dangerous waste or dangerous waste constituents that could threaten human health or the environment (WAC 173-303-350, Emergencies) has occurred at the facility. An incident requiring evacuation of personnel or the summoning of emergency response units will not necessarily indicate that the plan will be implemented. The incident classification process is described in DOE/RL-94-02, Section 4.0.

Under DOE guidance, this plan will be implemented whenever the BED determines that one of the incidents listed in Section 6.0 of this plan has or will occur and that the severity is or will be such that there is a potential to endanger human health or the environment.

DOE Declared Emergencies are assigned one of three classifications which in the order of increasing severity are: 1) Alert Emergency, 2) Site Area Emergency, and 3) General Emergency. The 242-A Evaporator implements responses to these DOE emergencies through this plan and criteria identified in DOE-0223, RLEP 1.1, Appendix 1-2.M, and other documents listed in Attachment A of this plan.

The BED assesses each incident to determine the response necessary to protect personnel, the facility, and the environment. If emergency assistance from Hanford Patrol, Hanford Fire Department, or ambulance units is required, the Hanford Emergency Response Number (911) is used to contact the POC and request the desired assistance. To request other resources or assistance from outside the facility, the POC business number is used (373-3800).

5.0 FACILITY HAZARDS

This section describes hazards that pose significant risks to human health or the environment and identify quantitative values for those risks.

5.1 Hazardous Materials

Potentially hazardous materials at the 242-A Evaporator are used for normal maintenance and support functions. These could include acids, caustics, oils, diesel fuel and solvents. Diesel fuel also presents a flammability hazard. A significant release of materials would be classed as a WAC 173-303 or DOE Emergency.

Material Safety Data Sheets (MSDSs) are at the following locations:

- 2025EA Building:
  - Room 101
  - Room 104
- 2025E Building
  - Maintenance Shop, Room 103
  - Control Room
- 242-A Evaporator Control Room.

5.2 Industrial Hazards

Industrial hazards associated with the 242-A Evaporator include electrical equipment, pressurized equipment, high temperature equipment, rotating equipment, confined spaces, and compressed gas cylinders. These industrial hazards do not pose a threat to the health and safety of the general public or the environment. Industrial hazards are addressed in the building health and safety plan and maintenance programs.

5.3 Dangerous/Mixed Waste Hazards

5.3.1 Solid Form

Dangerous/mixed waste is generated at the 242-A Evaporator during sampling, decontamination, and maintenance activities. This waste is accumulated in a designated accumulation area south of the 242-A Building and transported to a 90-day accumulation area when required.

5.3.2 Liquid Form

Highly radioactive mixed waste solution is processed at the 242-A Evaporator and contained in the vapor-liquid separator, C-A-1, and ancillary equipment. Low radioactive, mixed waste solution is contained in the condensate collection tank, C-100, and ancillary equipment. Although the mixed waste solution contains chemicals that are hazardous (primarily ammonia and sodium hydroxide), the bounding consequence for spills or releases of this waste are based on its radiological components. Major radioactive isotopes and potential concentrations in the waste are shown in Table 1.

Table 1. Major Contributors to the 242-A Evaporator Waste Bounding Source Term

Isotope	Bq/L	Ci/L
Sr-90	8.14E+09	2.20E-01
Ru-106	1.96E+09	5.30E-02
Cs-137	5.55E+10	1.50E+00
Pu-239	5.92E+06	1.60E-04
Pu-241	5.55E+08	1.50E-02
Am-241	3.70E+07	1.00E-03

The total volume of the vapor-liquid separator and recirculation loop (85,000 to 95,000 liters) is used to determine the potential radiological hazard. Sr-90 and Cs-137, along with their daughter products (Y-90 and Ba-137m), are the primary radiological hazards. Ru-106, Pu-239, Pu-241, and Am-241 also are significant contributors.

5.3.3 Gaseous Form

A waste blending error in the DST system potentially could generate large amounts of ammonia gas from the 242-A Evaporator vent system during processing.

5.4 Radioactive Materials

Radioactive material in solid form consists of waste materials which have not contacted mixed waste solutions. Radioactive waste materials removed from radiation areas are packaged and transported to an approved radioactive waste storage facility.

Radioactive materials in liquid form are mixed wastes and are described in Section 5.3.2.

Radioactive materials in gaseous form are emitted from the vessel vent and building exhaust ventilation systems. These systems have HEPA filters to remove radioactive particulate, reducing emissions to acceptable discharge levels. Failure of HEPA filters could result in a loss of confinement as described in Section 6.1.8.

5.5 Criticality

A criticality is not a credible accident at the 242-A Evaporator.

6.0 POTENTIAL EMERGENCY CONDITIONS

Potential emergency conditions, under both WAC 173-303 and DOE guidance, may include one of three basic categories: operations (process upsets, fires and explosions, loss of utilities, spills, and releases), natural phenomena (earthquakes and storms), and security contingencies (bomb threats, hostage situations, etc.). The following are conditions that may lead to an emergency situation (WAC or DOE defined) at the 242A Evaporator and require the implementation of this plan.

Potential radioactive/dangerous/mixed waste release modes include fires, explosions, spills, or releases. These events are evaluated based on the potential impact to operations and subsequent release of waste materials. Potential consequences to human health or the environment are the ultimate criteria for event classification and protective response actions. Additionally, prolonged small releases are evaluated for their potential to impact human health or the environment.

6.1 Operations Emergencies

The conditions for operations emergencies are present only when mixed waste is present in the vapor-liquid separator, C-A-1, recirculation loop, and ancillary equipment.

6.1.1 Loss of Utilities

6.1.1.1 Loss of Electrical Power

A loss of electrical power could lead to a loss of compressed air, causing the vapor-liquid separator, C-A-1, drain valves to open and suddenly dump the contents to DST system tank 241-AW-102. A potential over pressurization and subsequent radiological release could occur from that tank. Mitigating actions for a radiological release from the DST system are taken per the tank farms emergency procedures.

A loss of electrical power would interrupt processing but would not produce an emergency event at the 242-A Evaporator.

6.1.1.2 Loss of Compressed Air

A loss of compressed air would cause the vapor-liquid separator, C-A-1, drain valve to open and suddenly dump the contents to DST system tank 241-AW-102. A potential over pressurization and subsequent radiological release could occur from that tank. Mitigating actions for a radiological release from the DST system are taken per the tank farms emergency procedures.

A loss of compressed air would interrupt processing but would not produce an emergency event at the 242-A Evaporator.

6.1.1.3 Loss of Raw Water

Raw water can be used as seal water for the mechanical seals on P-B-1 recirculation pump and P-B-2 slurry pump when the normal supply of process condensate is not available. If raw water is supplied to the seals, and loss of raw water occurs, failure of mechanical seals could occur, causing a spray release of mixed waste into the facility. The spray release scenario is discussed in Section 6.1.8. Interlocks are provided to stop the pumps on low seal water flow.

Raw water supplies cooling water to the EC-1, EC-2, and EC-3 condensers. Loss of raw water during facility operation will cause high temperatures in TK-C-100, which will result in a major process upset.

Raw water supplies cooling to the air compressors, with sanitary water available as a backup. If loss of raw water occurs, and backup cooling by sanitary water is not initiated within 15 to 20 minutes, the air compressors could overheat, causing a loss of compressed air. A loss of compressed air is discussed in section 6.1.1.2.

6.1.1.4 Loss of Sanitary Water

If sanitary water is supplying cooling to the air compressors with raw water unavailable, the air compressors could overheat causing a loss of compressed air. A loss of compressed air is discussed in section 6.1.1.2.

6.1.1.5 Loss of K1 or Vessel Ventilation System

The K1 ventilation system maintains contaminated areas of the 242-A Building at a negative pressure (with respect to atmospheric) to prevent contamination spread to uncontaminated areas. The ventilation system includes two stages of high efficiency particulate air (HEPA) filters, two exhaust fans, and stack sampling and monitoring equipment. Both fans are electrically powered, however the backup fan can be powered by a diesel powered standby generator. The fans are interlocked so that if primary electrical power is lost, the backup fan automatically starts once the generator is on line. The K1 ventilation system is interlocked to shut down the primary fan and prevent the secondary fan from starting if high radioactive particulate level is detected in the exhaust stream.

The vessel ventilation system maintains the condenser vent system and the C-100 tank under vacuum to prevent contamination spread from the processing equipment to the rooms. The vessel vent system includes a demister, prefilter, heater, two HEPA filters in series, an exhaust fan, and stack sampling and monitoring equipment. The vessel ventilation monitoring system alarms in the control room if high radiation is detected.

The K1 and vessel ventilation systems are required for 242-A Evaporator processing. A loss of either ventilation system would require the 242-A Evaporator to be shut down but would not result in an emergency condition. A ventilation system shutdown due to a radiological material release is discussed in section 6.1.8.1. A loss of confinement is discussed in section 6.1.8.3.

6.1.1.6 Loss of Steam

A loss of steam would interrupt the processing but would not produce an emergency event. Emergency planning is not required.

6.1.2 Major Process Disruption/Loss of Plant Control

A major process disruption/loss of plant control can be caused by failure of the Monitor and Control System (MCS) computer. A loss of MCS could cause the vapor-liquid separator, C-A-1, drain valve to open and suddenly dump the contents to DST system tank 241-AW-102. A potential over pressurization and subsequent radiological release could occur from that tank. Mitigating actions for a radiological release from the DST system are taken per tank farms emergency procedures.

6.1.3 Pressure Release

Consequences of a pressure release of mixed waste during processing are radiological in nature and are discussed in Section 6.1.8.

6.1.4 Fire and/or Explosion

A fire/explosion could generate highly toxic and/or corrosive fumes. Flying debris could result from explosions or compressed gas cylinder failure. Process system disruption, loss of plant control, and breach of process system boundaries could result from the flying debris.

If mixed waste is present in the vapor-liquid separator, C-A-1, process recirculation loop, and ancillary equipment, and a fire occurs in the control room, aqueous makeup room, HVAC room, condenser room, pump room, or evaporator room lasting longer than 30 minutes and requiring fire department actions for suppression, emergency classification should be made per criteria stated in DOE-0223, *Emergency Plan Implementing Procedure*, Appendix 1-2.M.

If an explosion is confirmed to have occurred at the 242-A Evaporator and the explosion threatens areas containing hazardous chemicals and/or radioactive material, or if the explosion breaches the external 242-A Building walls when the vapor-liquid separator contains solution, emergency classifications are per DOE-0223, *Emergency Plan Implementing Procedure*, Appendix 1-2.M.

6.1.5 Hazardous Material Spill or Release

A waste blending error in the DST system potentially could generate large amounts of ammonia gas from the 242-A Evaporator vent system during processing. Ammonia stack releases of more than 5 grams per second (40 pounds per hour and ammonia stack releases of more than 38 grams per second (300 pounds per hour) meet emergency criteria stated in DOE-0223, *Emergency Plan Implementing Procedure*, Appendix 1-2.M.

6.1.6 Radioactive/Mixed Waste Spill

The hazards consequences for mixed waste releases are radiological. Radiological releases are discussed in Section 6.1.8.

6.1.7 Transportation and/or Packaging Incidents

A transportation and/or packaging incident involving hazardous chemicals or samples could result in exposure to hazardous and radioactive materials. Potential environmental damage by their release could also occur.

6.1.8 Radiological Material Release

6.1.8.1 Ventilation System Release

If a mixed waste release causes K1 ventilation or vessel ventilation system high radiation, it is necessary to quickly assess whether any radioactive material was released. If there is a release of radioactive material, emergency classification will be made per criteria stated in DOE-0223, *Emergency Plan Implementing Procedure*, Appendix 1-2.M.

6.1.8.2 Release of Mixed Waste into Facility

A catastrophic release of mixed waste into the Pump or Evaporator rooms would necessitate an emergency classification per DOE-0223, *Emergency Plan Implementing Procedure*, Appendix 1-2.M.

6.1.8.3 Loss of Confinement

If a loss of confinement in the 242-A Building occurs, along with a loss of negative pressure in radiation areas, emergency classification will be made per DOE-0223, *Emergency Plan Implementing Procedure*, Appendix 1-2.M.

6.1.9 Criticality

A criticality is not a credible accident at the 242-A Evaporator.

6.2 Natural Phenomena

Natural phenomena are discussed in the following sections.

6.2.1 Seismic Event

Depending on the magnitude of the seismic event, severe structural damage could occur at the 242-A Evaporator, resulting in serious injuries or fatalities and the release of hazardous or radioactive materials to the environment. Damaged electrical circuits and wiring could result in the initiation of fires.

Any seismic event that is felt by personnel, with some minor facility damage, and disturbance of tall objects at the 242-A Evaporator locations that house hazardous chemicals and/or radioactive materials requires classification per DOE-0223, *Emergency Plan Implementing Procedure*, Appendix 1-2.M. An emergency classification upgrade could occur based on facility conditions and/or actual hazardous material or radioactive/dangerous/mixed waste releases determined by personnel assessing quake damage.

6.2.2 Ashfall/Snow Fall Roof Overloading

Ash or snow accumulation causing actual roof or other structural damage to buildings containing hazardous material or radioactive/dangerous/mixed waste requires classification per DOE-0223, *Emergency Plan Implementing Procedure*, Appendix 1-2.M. There should be ample warning of an approaching large ashfall to allow the facilities to be placed in a stable condition.

6.2.3 High Winds/Tornados

When sustained wind speeds in excess of 40 meters per second (90 miles per hour) are observed and cause degradation of the facility safety equipment/confinement barriers, emergency classification is made per *DOE-0223, Emergency Plan Implementing Procedure*, Appendix 1-2.M. An emergency classification upgrade could occur based on actual facility damage or release of hazardous materials, radioactive/dangerous/mixed waste.

6.2.4 Flood

A flood is not a credible accident at 242-A Evaporator because the facility is not within the Columbia River flood plain.

6.2.5 Range Fire

In the event that a range fire threatens any 242-A Evaporator building containing hazardous material or radioactive/dangerous/mixed waste, emergency classification is made per DOE-0223, *Emergency Plan Implementing Procedure*, Appendix 1-2.M.

6.2.6 Aircraft Crash

If an aircraft crash occurs into or near the 242-A Evaporator, emergency classification is made per DOE-0223, *Emergency Plan Implementing Procedure*, Appendix 1-2.M. An emergency classification upgrade could occur based on actual facility damage or release of hazardous material or radioactive/dangerous/mixed waste.

6.3 Security Contingencies

6.3.1 Bomb Threat/Suspicious Object

Bomb threats may pose a fire or explosion hazard. Fire or explosion from a bomb could lead to the release of hazardous constituents or materials and exposure and bodily harm to personnel. Emergency classification will be made per DOE-0223, *Emergency Plan Implementing Procedure*, Appendix 1-2.M. If the device explodes, classification of the event will be performed as stated in Section 6.1.4.

6.3.2 Hostage Situation/Armed Intruder

A hostage situation or armed intruder(s) at the 242-A Evaporator results in emergency classification per DOE-0223, *Emergency Plan Implementing Procedure*, Appendix 1-2.M. An emergency classification upgrade could occur based on actual facility damage or release of hazardous material or radioactive/dangerous/mixed waste.

6.3.3 Suspicious Object

The major effect on the facility due to recognizing a suspicious object is that the facility should be placed in a safe configuration, if time permits, and the facility evacuated.

7.0 INCIDENT RESPONSE

The initial response to any emergency is to immediately protect the health and safety of persons in the immediate area. Identification of released material is essential to determine appropriate protective actions. Containment, event notifications, treatment, and disposal assessment are secondary responses.

The following sections describe the process for implementing basic protective actions as well as descriptions of response actions for the events listed in Section 6.0. DOE/RL-94-02, Section 1.3, provides concept of operations for emergency response on the Hanford Site.

Incident responses are coordinated from the 242-A Evaporator control room or a designated alternate location.

7.1 Protective Actions Responses

7.1.1 Evacuation

The objective of a facility evacuation order is to limit personnel exposure to hazardous materials or radioactive/dangerous/mixed waste by increasing the distance between personnel and the hazard. The scope of the evacuation includes evacuation of the facility due to an event at the facility as well as evacuation of the facility in response to a site evacuation order. Evacuation is directed by the BED when conditions warrant and applies to all personnel not actively involved in the event response or in emergency plan-related activities.

The BED initiates the evacuation by directing an announcement be made to evacuate along with the evacuation location over the public address system and facility radios, activate the evacuation siren for three minutes, and, as conditions warrant, by activating the 200 Area evacuation alarms by calling the POC using 911 (preferred) or 373-3800. Personnel proceed to a predetermined staging area (shown in Figure 1), or other safe upwind location, as determined by the BED. The BED determines the operating configuration of the facility and identifies any additional protective actions to limit personnel exposure to the hazard.

Emergency organization personnel or assigned operations personnel conduct a sweep of occupied buildings to ensure that all non-essential personnel and visitors have evacuated. For an immediate evacuation, accountability is performed at the staging area. The BED assigns personnel as accountability aides and staging area managers with the responsibility to ensure that evacuation actions are taken at the 242-A and 242-AB Buildings. All implementing actions executed by the aides/managers are directed by the emergency response procedures identified in Attachment A. When evacuation actions are complete, the aides/managers provide a status report to the BED. The BED provides status to the Incident Commander.

7.1.2 Take Cover

The objective of the take cover order is to limit personnel exposure to hazardous or radioactive/dangerous/mixed waste when evacuation is inappropriate or not practical. Evacuation might not be practical or appropriate because of extreme weather conditions or the material release might limit the ability to safely evacuate personnel.

The BED initiates the take cover by directing an announcement be made over the public address system and facility radios, by activating the take cover siren for three minutes, and, as conditions warrant, by activating the 200 Area take cover alarms by calling the POC using 911 (preferred) or 373-3800. Actions to complete a facility take cover order are directed by the emergency response procedure in Attachment A. Protective actions associated with operations include configuring, or shutting down, the ventilation systems. Determination of additional take cover actions is based on operating configuration, weather conditions, amount and duration of release, and other conditions, as applicable to the event and associated hazard. As a minimum, personnel exposure to the hazard are minimized. The BED assigns personnel as accountability aides with responsibility to ensure that take cover actions are taken at all occupied buildings at the 242-A Evaporator. All implementing actions executed by the aides/managers are directed by the emergency response procedures in Attachment A. When take cover actions are complete the aides/managers provide the BED with a status report.

7.2 Response to Operations Emergencies

Operational activities to isolate, contain, and mitigate the event can be performed in parallel with classification and protective action implementation. The responses are structured to allow parallel activity with clearly established priorities. The division of actions and workload between various personnel is such that coordinated team responses result in the successful implementation of both emergency operating actions and emergency planning requirements. Specific event mitigation strategy for each type of accident is provided in the following sections.

7.2.1 Loss of Utilities

7.2.1.1 Loss of Electrical Power

Should there be a loss of electrical power to the 242-A Evaporator, all personnel are evacuated from radiation areas due to the potential loss of radiation monitoring equipment (i.e., continuous air monitors, area radiation monitors). In addition, all non-essential personnel leave the facility. Access into the radiation and adjacent areas is restricted to response personnel who are properly clothed and equipped. Radiation monitoring by radiological control personnel is established, and facility operations are properly shutdown to a safe configuration.

If back-up power is not automatically placed in service, the diesel powered standby generator is manually placed in service. Operation of the Backup K1 Ventilation system exhaust fan is checked and, if not operating, actions are taken to start the fan (K1-5-2), or to secure the confinement area. If an exhaust fan is operating, verification is made that the exhaust stack radiation monitor is returned to service.

If the evaporator is in operation mode and a dump of C-A-1 vessel does occur, AW Tank Farm personnel are notified of impending pressurization of DST system tank 241-AW-102. The 200 East Area Tank Farms Shift Manager is notified of the event as is the 242-A Evaporator plant management.

All implementing actions executed by the aides/managers are directed by the emergency response procedures in Attachment A.

7.2.1.2 Loss of Compressed Air

Upon loss of the compressed air at the 242-A Evaporator, restoration of the air supply system is immediately attempted. If this fails, non-essential personnel are notified to exit the facility. Automatic dumping of the C-A-1 vessel is stopped; the vessel could dump later when air pressure that holds the drain valve fails open. If a dump of C-A-1 vessel does occur, AW Tank Farm personnel are notified of impending pressurization of DST system tank 241-AW-102.

Plant conditions are monitored as components fail and shutdown interlocks activate, and the facility is placed into a safe shutdown condition. The K1 ventilation system is monitored for potential failure due to loss of damper control (caused by loss of air supply), and plant management is notified of the facility condition. A backup air compressor is placed in service as soon as possible.

7.2.1.3 Loss of Raw Water

On loss of the raw water system, 242-A Evaporator personnel are immediately notified, and non-essential personnel are directed to leave the facility. Essential personnel are directed to the 242-A Evaporator control room for support as required. The P-B-1 and P-B-2 pumps are shutdown to prevent damage to the mechanical seals. If seal water is being supplied by the process condensate system, pump operation may continue through a

controlled shutdown. The compressors are placed on sanitary water cooling. If air compressor failure occurs due to loss of cooling water, the automatic dumping of the C-A-1 vessel is terminated; the vessel could dump later when air pressure that holds the drain valve fails open. If a dump of C-A-1 vessel does occur, AW Tank Farm personnel are notified of impending over-pressurization of DST system tank 241-AW-102. The 200 East Area Tank Farms Shift Manager is notified of the facility condition.

Facility operations are properly shutdown, and plant management is notified of the facility condition.

7.2.1.4 Loss of Sanitary Water

On loss of the sanitary water, 242-A Evaporator Operations personnel perform the following:

1. Notify facility personnel
2. Ensure all air compressors are placed on raw water cooling
3. Ensure all chemical operations are terminated until safety showers and eye wash stations are operational (i.e., return of sanitary water system).

7.2.1.5 Loss of K1 Ventilation System

On loss of the K1 ventilation system, restoration of the primary or backup K1 ventilation exhaust fan is immediately attempted. If the K1 ventilation system cannot be restored immediately, personnel are notified to exit contaminated areas, and non-essential personnel are directed to exit the facility. Essential personnel report to the 242-A control room for support as required. Continued adequate contamination control is ensured by having the K2 ventilation system operating. The K2 ventilation system maintains positive pressure in non-contaminated areas. If the primary and backup K1 ventilation system exhaust fans are not running, actions are taken to shutdown the facility and restrict access to contamination areas. Plant management is notified of facility conditions.

7.2.2 Major Process Disruption/Loss of Plant Control

Upon loss of the MCS, the 242-A Evaporator Shift Operations Manager is notified while an attempt is made to return the MCS to service. If a dump of C-A-1 vessel does occur, AW Tank Farm personnel are notified of impending over-pressurization of DST system tank 241-AW-102. Non-essential personnel exit the 242-A Evaporator facility.

The system condition is assessed, and corrective actions are implemented. Operations are placed on recirculation by securing the slurry pump and waste feed to the plant. Facility shutdown is accomplished by performing manual, localized actions such as system isolation, equipment shutdown, etc.

7.2.3 Pressure Release

If mixed waste release occurs, perform actions identified in Section 7.2.5.

7.2.4 Fire and/or Explosion

On becoming aware of a fire and/or explosion, the discoverer notifies personnel (if any) in the immediate area and directs them to a safe location. The discoverer then activates the nearest fire alarm pull station, contacts 911 to request fire fighting assistance, and contacts the 242-A Evaporator control room to report the fire. As soon as non-essential personnel are notified of a fire (verbally or by fire alarm activation), they immediately exit the facility to a safe upwind location, account for their personnel, and follow the instructions of responding personnel. If personnel are reported as missing, and might be within the facility, the Hanford Fire Department conducts a search.

The BED is notified and initiates activation of the incident command post and resources.

Operations personnel initiate a plant shutdown with the method (controlled or emergency) depending on the location and severity of the fire and the location and type of hazards in the affected area. A controlled shutdown is performed unless it is unsafe to remain in the control room. An emergency shutdown is performed if the control room must be evacuated. The Building Emergency Director interfaces with the Hanford Fire Department and provides the following:

a. Location and health of personnel, including missing personnel and possible locations for fire fighters to search.

b. Location and severity of fire.

c. Known hazardous (radiological and nonradiological) conditions.

d. Facility operating status.

e. Utility systems status.

f. Support by radiological control personnel (i.e., monitoring, surveys, sampling, decontamination).

g. Facility layout, and facility known hazardous conditions, (i.e., electrical, thermal, flammable materials, pressurized cylinders, toxic gas, pressure systems, batteries, radiation areas, etc.).

h. Support for fire fighter activities as required.

Once the fire is extinguished, the Shift Operations Manager/BED ensures administrative restrictions are implemented to protect the facility, the workers, and the environment. The Shift Operations Manager/BED makes notifications as required and assists with recovery actions.

An incident requiring evacuation of personnel or the summoning of emergency response units does not necessarily indicate that the contingency plan has been implemented.

7.2.5 Hazardous Material, Dangerous and/or Mixed Waste Spills or Releases

The 242A Evaporator has engineering controls to contain or minimize spills. These controls include containment berms, dedicated spill control sumps, remote gauges and level indicators as well as spray shields on chemical pipe flanges. The 242A Evaporator procedures provide alarm response and maintenance actions for leak detection equipment, surveillance of possible leak locations, and response actions for detected spills.

Spills can result from many sources including process leaks, container spills or leaks, damaged packages or shipments, or personnel error. Spills of mixed waste are complicated by the need to deal with the extra hazard induced by the presence of radioactive materials.

If a spill or release is discovered, the discoverer performs the following actions:

1. Notifies the 242-A Evaporator control room and evacuates to a safe area
2. Remains available for consultation with the BED, Hanford Fire Department, or other emergency response personnel.

The control room operator performs the following actions:

1. Uses the public address system to notify the facility occupants of the event
2. Notifies the BED/HFD and relays information received from the event scene
3. Places the facility in a safe condition
4. Remains available to support further notification and response activities

The BED performs or arranges for personnel to perform the following actions:

1. Coordinates response activity and establishes a command post at a safe location
2. Obtains all available information pertaining to the incident and determines if the spill or release warrants implementation of the contingency plan in accordance with Sections 4.0, 6.1.5, and 6.1.8. In the case of ammonia releases, described in Section 6.1.5, this information includes monitoring stack ammonia concentrations.
3. Determines need for assistance from outside agencies and arranges for their mobilization and response
4. Initiates the appropriate announcements, if building or area evacuations are necessary
5. Arranges for care of any injured persons

6. Requests activation of the affected area emergency sirens/crash alarm system if a threat to surrounding facilities

7. Provides for event notification

8. Maintains access control at the incident site by keeping unauthorized personnel and vehicles away from the area. Security personnel can be used to assist in site control if control of the boundary is difficult. In determining controlled access areas, considers environmental factors such as wind speed and direction

9. Arranges for proper remediation of the incident after evaluation

10. Remains available for HFD, Hanford Patrol, and other authorities on the scene and provide all required information

11. Enlists the assistance of alternate BED(s), if around-the-clock work is anticipated

12. Ensures the use of proper protective equipment, remedial techniques (including ignition source control for flammable spills), and decontamination procedures by all involved personnel, if remediation is performed by 242-A Evaporator personnel

13. Remains at the incident command post to oversee activities and to provide information, if remediation is performed by the HFD Hazardous Materials Response Team or other response teams

14. Ensures proper containerization, packaging, and labeling of recovered spill materials and overpack containers

15. Ensures decontamination (or restocking) and restoration of emergency equipment used in the spill remediation before resuming operations

16. Provides required reports after the incident.

7.2.5.1 Damaged and/or Unacceptable Shipments

The 242-A Evaporator does not receive dangerous or mixed waste shipments.

7.2.6 Radiological Material Release

7.2.6.1 K1 Ventilation or Vessel Ventilation System Release

If high radiation alarms or HEPA filter failure indicate a radiological material release from the K1 ventilation or vessel ventilation system, the ventilation system is immediately shutdown. A near contact radiation survey is performed on a ventilation system sample filter to determine extent of the radiological material released. The actions described in Section 7.2.5 are then performed.

7.2.6.2 Release of Mixed Waste into Facility

If a catastrophic dumping of mixed waste from vapor-liquid separator C-A-1 occurs, the facility is immediately shutdown. AW Tank Farm personnel are notified of impending over-pressurization of DST system tank 241-AW-102. The 200 East Area Tank Farms Shift Manager is notified of facility condition. The actions in Section 7.2.5 are then performed.

If a catastrophic dumping of the vapor-liquid separator causes high radiation alarm on the K1 ventilation system, the actions described in Section 7.2.6.1 are performed.

7.2.6.3 Loss of Confinement

If a loss of confinement occurs, the proper operation and lineup of the K1/K2 ventilation systems are verified. The actions described in Section 7.2.5 are performed. If the high radiation alarm on the K1 ventilation system is actuated, the actions described in Section 7.2.6.1 are performed. If the loss of confinement results in a radiological release outside the facility, the actions described in Section 7.1.2 are performed.

7.2.7 Criticality

A criticality is not a credible accident at the 242-A Evaporator.

7.3 Prevention of Recurrence or Spread of Fires, Explosions, or Releases

The BED, in coordination with emergency response organizations, takes the steps necessary to ensure that a secondary release, fire, or explosion does not occur. The area of the initial incident is isolated by shutting off power, closing off ventilation systems, etc. The affected area containment is inspected for leaks, cracks, or other damage and for toxic vapor generation. Released material and waste remaining inside of containment structures are removed as soon as possible, and residual waste material is contained and isolated using dikes and adsorbents. Outside areas where residual released materials remain are covered or otherwise stabilized to prevent migration or spread from wind or precipitation run-off.

New structures, systems, or equipment are installed as required based on engineering evaluations to enable better management of hazardous materials or dangerous waste. Adjacent operations in affected areas are reactivated only after residual waste materials are removed to levels acceptable to control contamination spread.

7.4 Response to Natural Phenomena

If other emergency conditions arise as a result of a natural phenomena event, response is appropriate for the condition created. For example: A fire due to lightning initiates the fire response actions and a spill of hazardous material due to an earthquake initiates spill response actions.

7.4.1 Seismic Event

The Hanford Site emergency response organization's primary role in a seismic event is coordinating the initial response to injuries, fires, and fire hazards, and acting to contain or control radioactive and/or hazardous material releases.

Individuals should remain calm and stay away from windows, steam lines, and hazardous material storage locations. Once the shaking has subsided, individuals evacuate carefully and assist personnel needing help. The locations of any trapped individuals are reported to the BED or are reported to 911 or 373-3800.

The BED takes whatever actions are necessary to minimize damage and personnel injuries, including:

- Coordinating searches for personnel and potential hazardous conditions (fires, spills, etc.),
- Conducting personnel accountability,
- Securing utilities and facility operations,
- Arranging for rescue efforts, and notifying 911 or 373-3800 for assistance,
- Determining if hazardous materials were released,
- Determining current local meteorological conditions,
- Warning other facilities and implementing protective actions if release of hazardous materials poses a danger,
- Providing personnel and resource assistance to other facilities.

7.4.2 Volcanic Eruption/Ashfall

When notified of an impending ashfall, the BED implements measures to minimize the impact of the ashfall, including the following:

- Installing filter media over building ventilation intakes,
- Installing filter media or protective coverings on outdoor equipment that could be adversely affected by the ash (diesel generators, equipment rooms etc.),
- Shutting down some or all operations and processes,
- Sealing secondary use exterior doors,

7.4.3 High Winds/Tornados

On notification of impending high winds, the BED takes steps necessary to secure all outside doors and windows, and secure all outdoor waste and hazardous material handling activities. All doors and windows are shut, and personnel are warned to use extreme caution when entering or exiting the building.

7.4.4 Flood

Flooding of the 242-A Evaporator is not credible.

7.4.5 Range Fire

Responses to range fires are handled by preventive measures (i.e., keeping hazardous material and waste accumulation areas free of combustible materials such as weeds and brush). If a range fire breaches the facility boundary, the response is as described for a fire.

7.4.6 Aircraft Crash

Response to an aircraft crash is appropriate for the condition created. For example, a fire due to explosion or electrical shorts, initiates the fire response actions specified in Section 7.2.4.

7.5 Security Contingencies

7.5.1 Bomb Threat/Suspicious Object

7.5.1.1 Telephone Threat

Personnel receiving telephoned threats attempt to get as much information as possible from the caller. A form is available for personnel to keep by their telephone to use as a guide for getting useful information from the caller. On conclusion of the call, personnel notify the BED and Security.

The BED evacuates the facility and questions personnel at the staging area regarding any suspicious objects in the facility. When Security personnel arrive, their instructions are followed.

7.5.1.2 Written Threat

Receivers of written threats handle the letter as little as possible and notify the BED and Security. Depending on the content of the letter, the facility may or may not be evacuated. The letter is turned over to Security personnel and their instructions are followed.

7.5.2 Hostage Situation/Armed Intruder

The discoverer of a hostage situation/armed intruder reports the situation to the BED and to the POC via 911 or 373-3800, if possible. The BED, after conferring with Security personnel, may

covertly evacuate areas of the facility not observable by the hostage taker(s)/intruder. No alarms will be sounded.

Security will determine the remaining response actions and will activate the Hostage Negotiating Team, if necessary.

7.5.3 Suspicious Object

The discoverer of a suspicious object reports it to the BED and to the POC via 911 or 373-3800, and, if possible, ensures that the object is not disturbed.

The BED orders evacuation of the facility and (based on the description provided by the discoverer) attempts to determine the identity or owner of the object. This may be done by questioning facility personnel at the staging area.

If the identity/ownership of the object cannot be determined, then Security assumes command of the incident. The canine unit is used to determine if the package contains explosives. If there is a positive indication of explosives or it cannot be assured that there are no explosives, then the Richland Police Department's Emergency Ordinance Disposal Team is dispatched to the facility to properly dispose of the device.

8.0 TERMINATION OF EVENT, INCIDENT RECOVERY, AND RESTART OF OPERATIONS

The DOE/RL-94-02, *Hanford Emergency Management Plan*, Section 9.0, describes these considerations. The extent by which these actions are employed is based upon the incident classification of each event. In addition, DOE/RL-94-02 contains considerations for the management of incompatible wastes, which may apply.

8.1 Termination of Event

For events where the DOE-RL Emergency Operations Center (RL-EOC) is activated, the DOE-RL Emergency Manager has the authority to declare event termination. This decision is based on input from the BED, Incident Commander, and other emergency response organization members. For events where the RL-EOC is not activated, the incident command system and staff declare event termination.

8.2 Incident Recovery and Restart of Operations

A recovery plan is developed when necessary. A recovery plan is needed following an event where further risk could be introduced to personnel, the facility, or the environment through recovery action and/or to maximize the preservation of evidence. Depending on the magnitude of the event and the effort required to recover from the event, recovery planning may involve personnel from DOE-RL and other contractors. If a recovery plan is required, it is reviewed by appropriate personnel and approved by a Recovery Manager before restart. Restart of operations is performed in accordance with the approved plan.

If this plan is to be implemented for a WAC emergency (see Section 4.0), the Washington State Department of Ecology is notified before operations can resume. The DOE/RL-94-02, *Hanford Emergency Management Plan*, Section 5.1 discusses different reports to outside agencies. This notification is in addition to other required reports and includes information documenting the following conditions:

1. There are no incompatibility issues with the waste and released materials from the incident.

2. All the equipment has been clean, fit for its intended use, and placed back into service. The notification may be made via telephone conference. Additional information that Ecology requests regarding these restart conditions will be included in the required 15-day report identified in WAC 173-303-360(2)(k).

For emergencies not involving activation of the RL-EOC, the BED ensures that conditions are restored to normal before operations are resumed. If the Hanford Site Emergency Organization was activated and the emergency phase is complete, a special recovery organization could be appointed at the discretion of DOE-RL to restore conditions to normal. This process is detailed in DOE-RL and contractor emergency procedures. The makeup of this organization depends on the extent of the damage and its effects. The onsite recovery organization is appointed by the appropriate contractor's management.

8.3 Incompatible Waste

After an event, the BED or the onsite recovery organization ensures that no waste that might be incompatible with the released material is treated, stored, and/or disposed of until cleanup is completed. Cleanup actions are taken by facility personnel or other assigned personnel. DOE/RL-94-02, Section 9.2, describes actions to be taken.

Waste from cleanup activities is designated and managed as newly generated waste. A field check for compatibility before storage is performed as necessary. Incompatible wastes are not placed in the same container. Containers of waste are placed in storage areas appropriate for their compatibility class.

If incompatibility of wastes was a factor in the incident, the BED or the onsite recovery organization ensures that the cause is corrected.

8.4 Post-Emergency Equipment Maintenance and Decontamination

All equipment used during an incident is decontaminated (if practicable) or disposed of as spill debris. Decontaminated equipment is checked for proper operation before storage for subsequent use. Consumable and disposed materials are restocked. Fire extinguishers are recharged or replaced.

The BED ensures that all equipment is cleaned and fit for its intended use before operations are resumed. Depleted stocks of neutralizing and absorbing materials are replenished, self-contained breathing apparatus are cleaned and refilled, protective clothing is cleaned or disposed of and restocked, etc.

9.0 EMERGENCY EQUIPMENT

Hanford Site emergency resources and equipment are described and listed in DOE/RL-94-02, Appendix C.

9.1 Fixed Emergency Equipment

FIXED EMERGENCY EQUIPMENT		
TYPE	LOCATION	CAPABILITY
Safety shower/eye wash station	1 - Aqueous makeup room -south side. Next to truck load-in airlock and chem storage tank. 1 - Condenser room basement, SE corner. 1 - Condenser room 4th floor	Assist in flushing chemicals/materials from body and/or eyes and face.
Wet pipe sprinkler system	Located throughout the facility.	Assist in the control of fire.
Fire alarm pull boxes	Located throughout the facility.	Activates the building fire alarm and notifies the HFD.
Emergency lighting - (lanterns)	Located throughout the facility	Provide 1 hour of temporary lighting.
Back-up diesel generator	50 ft SE of the 242-A main entrance	Provide back-up power.

9.2 Portable Emergency Equipment

PORTABLE EMERGENCY EQUIPMENT		
TYPE	LOCATION	CAPABILITIES
General purpose fire extinguishers	Throughout the 242-A Evaporator facility.	Fire suppression for class A,B,C, fires.
Halon fire extinguishers	Two in control room.	Suppress electrical fires.

9.3 Communications Equipment/Warning Systems

COMMUNICATIONS EQUIPMENT		
TYPE	LOCATION	CAPABILITY
Fire alarms	Located throughout the facility in halls, corridors, and locker rooms.	Audible throughout the 242-A Evaporator Building
Roof siren	242-A Evaporator roof	Provide warning to personnel to take cover or evacuate.
Operations process alarms (from MCS or hard wired alarm panels)	242-A Evaporator control room	Audible in the 242-A Evaporator control room.
Public address system (PAX)	Located throughout the 242-A Evaporator Building (except in pump and evaporator rooms)	Provides communications and public address capabilities.
Portable Radios	242-A control room	Communication to the 242-A control room.
Telephone	242-A control room, office area's, AMU room, and condenser room.	Internal and external communications. Allows notification of outside resources (HFD, Hanford Patrol, etc.)
Crash alarm	242-A control room	Audible in the 242-A control room

9.4 Personal Protective Equipment

PERSONNEL PROTECTIVE EQUIPMENT		
TYPE	LOCATION	CAPABILITY
Self-contained breathing apparatus (SCBA)	Two located in the 242-A Evaporator control room	Provides breathable air for initial response to emergency, and recovery activities when required
Respirators	242-A respirator storage room	Filtered air for recovery of known hazards

9.5 Spill Control and Containment Supplies

SPILL KITS AND SPILL CONTROL EQUIPMENT		
TYPE	LOCATION	CAPABILITY
Organic and inorganic spill kits.	Survey area next to personnel protective equipment storage room, wall mounted	Provides spill control for organic and inorganic materials

9.6 Emergency Response Center

For emergencies not requiring evacuation, the BED and support personnel will assemble in the 242-A Evaporator control room, or other location as identified by the BED.

10.0 COORDINATION AGREEMENTS

DOE-RL has established a number of coordination agreements, or memoranda of understanding (MOU) with various agencies to ensure proper response resource availability for incidents involving the Hanford Site. A description of the agreements is contained in DOE/RL-94-02, Table 3-1.

11.0 REQUIRED REPORTS

Post incident written reports are required for certain incidents on the Hanford Site. The reports are described in DOE/RL-94-02, Section 5.1.

12.0 PLAN LOCATION

Copies of this plan are maintained at the following locations:

- 242-A Evaporator Control Room
- 200 Area Effluent Treatment Facility Control Room
- Operations Managers Office (Building 2025EA Room 101)
- 200 Area LWPF Regulatory File

13.0 BUILDING EMERGENCY ORGANIZATION

BED	TITLE	WORK LOCATION	WORK PHONE
Primary	Shift Operation Manager (SOM)	242-A Evaporator control room or 200 Area Effluent Treatment Facility Control Room	373-2737, Evap control room 373-4446, Evap shift office 373-0993, ETF shift office 373-9000, ETF control room
Alternate	BED Qualified Shift Technical Authority	2025E	372-0000

The complete building emergency organization listing of positions, names, work locations and telephone numbers for essential LWPF personnel is maintained in the organization administrative procedures. Copies are distributed to appropriate facility locations and to Emergency Preparedness. In addition, work and home telephone numbers of the BEDs and alternates are available from the POC (373-3800) in accordance with Hanford Facility RCRA Permit, Dangerous Waste Portion, General Condition II.A.4.

14.0 REFERENCES

DOE-232.1, "Occurrence Reporting and Processing of Operations Information," U.S Department of Energy, Washington D.C.

DOE/RL-94-02, *Hanford Emergency Management Plan*.

WAC 173-303, "Dangerous Waste Regulations," *Washington Administrative Code*, Washington State Department of Ecology, Olympia, Washington.

29 CFR 1910.120, *Hazardous Waste Operations and Emergency Response*

NIOSH, *Pocket Guide to Chemical Hazards*, National Institute of Occupational Safety and Health, U.S. Department of Health and Human Resources, Public Health Service, Centers for Disease Control, Washington, D.C.

ATTACHMENT A

Listing of Procedures and Guides

Site-Wide Procedures

DOE-0223, *Emergency Plan Implementing Procedures*:

- RLEP-1.1, "Hanford Incident Command System and Event Recognition and Classification," Appendix 1-2.M;
- RLEP-3.4, "Emergency Termination, Reentry, and Recovery."

Facility-Specific Emergency Response Procedures

- TO-685-001 Emergency Shutdown of Utility Support Systems
- TO-685-002 242A Evaporator Loss of Electrical Power
- TO-685-003 242A Evaporator Loss of Raw Water Systems
- TO-685-004 242A Evaporator Loss of K-1 Ventilation Systems
- TO-685-005 242A Evaporator Loss of the Steam Systems
- TO-685-006 242A Evaporator Loss of Compressed Air System
- TO-685-007 242A Evaporator Loss of MCS Control
- TO-685-008 242A Evaporator Pressure Hazards
- TO-685-009 Process Upset

- EP-685-010 242A Evaporator Evacuation
- EP-685-020 242A Evaporator Take Cover
- EP-685-030 242A Evaporator Volcanic Eruption and Ashfall
- EP-685-040 242A Evaporator Seismic Event
- EP-685-050 242A Evaporator Fire and/or Explosion
- EP-685-060 242A Evaporator High Radiation Area
- EP-685-070 242A Evaporator Bomb Threat
- EP-685-080 242A Natural Emergency/Security Contingency Event

Hanford Facility RCRA Permit Modification Notification Forms
for
305-B Storage Facility
Part III, Chapter 2, Attachment 18

Index

Page 2 of 10:	Section 8, Figure 8-1:
Page 3 of 10:	Section 8.1.4, page 8-4, lines 45-48:
Page 4 of 10:	Section 8.1.5, page 8-5, lines 36-38:
Page 5 of 10:	Omitted
Page 6 of 10:	Section 7.4.4.4, page 7-7, lines 1-17:
Page 7 of 10:	Section 7.7. page 7-17, line 23:
Page 8 of 10:	Section 7, Figure 7.3:
Page 9 of 10:	Section 6.1.1.1, page 6-3, lines 6-12:
Page 10 of 10:	Section 6.3.1.3, page 6-10, lines 31-35 and page 6-11, lines 1-5:

Hanford Facility RCRA Permit Modification Notification Form

Unit:	Permit Part & Chapter:
305-B Storage Facility	**Part III, Chapter 2 and Attachment 18**

Description of Modification:

Chapter 8, Figure 8-1: change represents current course titles.

TRAINING COURSE NAME	STAFF POSITION[1] OS	E	TS	C
Building Emergency/Contingency Plan	A[2]	A	A	A
~~Handheld Radio Operator~~	~~I~~	~~I~~	~~I~~	~~I~~
General Radiation Safety	B	B	B	N
Radiation Safety for Females[3]	I	I	I	I
Respiratory Protection	A	A	A	N
TSD Operator (24 hour w/8-hour refresher)	I/A	I/A	I/A	I/A
SCBA Training	A	A	A	N
Fire Extinguisher Use	A	A	A	A
Worker Right-To-Know	I	I	I	I
Vehicle Accident Prevention	T	T	T	T
Crane, Hoist and Rigging Safety	N	N	T	N
Safe Forklift Operation	N	N	T	N
Hazardous Waste Shipment Certification	T	T	T	N
~~Radioactive Material Shipping Representative~~ Radioactive Mixed Waste Shipment Certification	~~B~~[4]	~~B~~[4]	~~B~~[4]	N
~~305-B Safe~~ annual review of facility operating procedures	A	A	A	A
Advanced Hazardous Waste Training	A	A	A	N
Hazardous Waste Operations Supervisor	I	N	N	N
Waste Designation Training	I	I[5]	I[5]	N

[1]Staff Position Key: OS Unit Operations Supervisor
E Waste Management Engineers
TS Waste Management Technicians and Scientist/Engineering Associates
C Waste Management Clerks

[2]Requirements Key: A Annually; B Biennially; T Triennially; I Initially upon assignment to the unit; N Not Required.

[3]Required for female staff only. This information is given in the various radiation safety classes and is not a separate stand-alone class.

[4] Required for Radioactive Mixed Waste Management staff (TS or E) only. Successful completion of this course meets the requirements of the Hazardous Waste Shipment Certification course

[5]Required for any TS that has the assigned duty of making waste designations.

Modification Class: [1 2 3]	Class 1	Class[1] 1	Class 2	Class 3
Please check one of the Classes:	X			

Relevant WAC 173-303-830, Appendix I Modification: A.1.

Enter wording of the modification from WAC 173-303-830, Appendix I citation:

A. General Permit Provisions
1. Administrative and Informational changes.

Submitted by Co-Operator:	Reviewed by RL Program Office:	Reviewed by Ecology:	Reviewed by Ecology:
Alice K. Ikenberry 12/13/99	TK Christensen 1/4/00		
A.K. Ikenberry Date	R.F. Christensen Date	A.B. Stone Date	L.E. Ruud Date

[1]Class 1 modifications requiring prior Agency approval.

[2] This is only an advanced notification of an intended Class [1]1, 2, or 3 modification, this should be followed with a formal modification request, and consequently implement the required Public Involvement processes when required.

[3] If the proposed modification does not match any modification listed in WAC 173-303-830 Appendix I, then the proposed modification should automatically be given a Class 3 status. This status may be maintained by the Department of Ecology, or down graded to [1]1, if appropriate.

Hanford Facility RCRA Permit Modification Notification Form	
Unit: **305-B Storage Facility**	Permit Part & Chapter: **Part III, Chapter 2 and Attachment 18**

Description of Modification:
Section 8.1.4, page 8-4, lines 45-48: Revised course enables staff to ship waste as well as material.

- Radioactive Mixed Waste Certification – Triennial: This training ensures that these persons understand their responsibilities and liabilities in the shipment of hazardous waste, and radioactive material/waste and that staff understand which regulations are applicable and how they must achieve compliance. ~~Radioactive Material Shipping Representative – Triennial: This course provides training in the onsite radioactive material shipping procedures and requirements. Successful completion of this course is required to receive authorization to sign for onsite radioactive shipments (onsite RSRs).~~

Modification Class: [1 2 3]	Class 1	Class[1]1	Class 2	Class 3
Please check one of the Classes:	X			

Relevant WAC 173-303-830, Appendix I Modification: A.1.

Enter wording of the modification from WAC 173-303-830, Appendix I citation:

A. General Permit Provisions
1. Administrative and Informational changes

Submitted by Co-Operator:	Reviewed by RL Program Office:	Reviewed by Ecology:	Reviewed by Ecology:
Alice K. Ikenberry 12/13/99	RF Christensen 1/4/00		
A.K. Ikenberry Date	R.F. Christensen Date	A.B. Stone Date	L.E. Ruud Date

[1]Class 1 modifications requiring prior Agency approval.

[2] This is only an advanced notification of an intended Class [1]1, 2, or 3 modification, this should be followed with a formal modification request, and consequently implement the required Public Involvement processes when required.

[3] If the proposed modification does not match any modification listed in WAC 173-303-830 Appendix I, then the proposed modification should automatically be given a Class 3 status. This status may be maintained by the Department of Ecology, or down graded to [1]1, if appropriate.

Hanford Facility RCRA Permit Modification Notification Form	
Unit: **305-B Storage Facility**	Permit Part & Chapter: **Part III, Chapter 2 and Attachment 18**

Description of Modification:

Section 8.1.5, page 8-5, lines 36-38: Hand help radios have been upgraded to cellular phones:

- ~~Hand Held Radio Operator: conducted initially, this briefing makes the employee familiar with the operation of the hand-held and truck- mounted radios for both everyday and emergency operation. This briefing also includes a discussion on radio etiquette.~~

Modification Class: [1 2 3]	Class 1	Class[1]1	Class 2	Class 3
Please check one of the Classes:	X			

Relevant WAC 173-303-830, Appendix I Modification: A.1.

Enter wording of the modification from WAC 173-303-830, Appendix I citation:

A. General Permit Provisions
   1. Administrative and Informational changes

Submitted by Co-Operator:		Reviewed by RL Program Office:		Reviewed by Ecology:		Reviewed by Ecology:	
A.K. Ikenberry	12/13/99 Date	R.F. Christensen	1/4/00 Date	A.B. Stone	Date	L.E. Ruud	Date

[1]Class 1 modifications requiring prior Agency approval.

[2] This is only an advanced notification of an intended Class [1]1, 2, or 3 modification, this should be followed with a formal modification request, and consequently implement the required Public Involvement processes when required.

[3] If the proposed modification does not match any modification listed in WAC 173-303-830 Appendix I, then the proposed modification should automatically be given a Class 3 status. This status may be maintained by the Department of Ecology, or down graded to [1]1, if appropriate.

This form was intentionally omitted.

Hanford Facility RCRA Permit Modification Notification Form	
Unit: **305-B Storage Facility**	Permit Part & Chapter: **Part III, Chapter 2 and Attachment 18**

Description of Modification:

Section 7.4.4.4, page 7-7, lines 1-17:

Building Emergency Director (BED) (or alternate)

1. Go directly to the unit to coordinate further activity. Take command of the scene from discovering unit employee.
2. Obtain all immediately available information pertaining to the incident. Determine need for assistance from agencies listed in Section 7.6 and arrange for their mobilization and response through the Single Point Contact.
3. If building evacuation is necessary, sound the fire alarm.
4. Arrange for care of any injured employees and provide for any additional help necessary to safely evacuate any disabled staff, or visitors.
5. If a threat to surrounding facilities/operations exists. The BED (or alternate) will identify the hazards and any appropriate actions needed in the case of an unplanned release and activate the Emergency Operations Center (EOC).

Modification Class: [1 2 3]	Class 1	Class[1]1	Class 2	Class 3
Please check one of the Classes:	X			

Relevant WAC 173-303-830, Appendix I Modification: A.1.

Enter wording of the modification from WAC 173-303-830, Appendix I citation:

A. General Permit Provisions
   1. Administrative and Informational changes

Submitted by Co-Operator:		Reviewed by RL Program Office:		Reviewed by Ecology:		Reviewed by Ecology:	
A.K. Ikenberry	12/13/99 Date	R.F. Christensen	1/4/00 Date	A.B. Stone	Date	L.E. Ruud	Date

[1]Class 1 modifications requiring prior Agency approval.

[2] This is only an advanced notification of an intended Class [1]1, 2, or 3 modification, this should be followed with a formal modification request, and consequently implement the required Public Involvement processes when required.

[3] If the proposed modification does not match any modification listed in WAC 173-303-830 Appendix I, then the proposed modification should automatically be given a Class 3 status. This status may be maintained by the Department of Ecology, or down graded to [1]1, if appropriate.

Hanford Facility RCRA Permit Modification Notification Form	
Unit: **305-B Storage Facility**	Permit Part & Chapter: **Part III, Chapter 2 and Attachment 18**

Description of Modification:

Section 7.7, page 7-17, line 23: This modification makes reference to the map showing the entire facility evacuation route.

7.7 EVACUATION PLAN [G-7]

The 305-B unit has an evacuation plan, which includes emergency signal identification and staging area location. In the event an evacuation is required, 305-B unit personnel depart by one of the exit doors noted in Figure 7.2 and proceed through the north gate. They are to assemble in the north parking lot Figure 7.3, Lane 2 accountability area for accounting. If the north gate is blocked by the emergency, personnel may escape through the Apple Street (west) gate opening to Stevens Drive or the south gate.

Modification Class: [1 2 3]	Class 1	Class[1] 1	Class 2	Class 3
Please check one of the Classes:	X			

Relevant WAC 173-303-830, Appendix I Modification: A.1.

Enter wording of the modification from WAC 173-303-830, Appendix I citation:

A. General Permit Provisions
   1. Administrative and Informational changes

Submitted by Co-Operator:		Reviewed by RL Program Office:		Reviewed by Ecology:		Reviewed by Ecology:	
Alice K. Ikenberry	12/13/99	RF Christensen	1/4/00				
A.K. Ikenberry	Date	R.F. Christensen	Date	A.B. Stone	Date	L.E. Ruud	Date

[1]Class 1 modifications requiring prior Agency approval.

[2] This is only an advanced notification of an intended Class [1]1, 2, or 3 modification, this should be followed with a formal modification request, and consequently implement the required Public Involvement processes when required.

[3] If the proposed modification does not match any modification listed in WAC 173-303-830 Appendix I, then the proposed modification should automatically be given a Class 3 status. This status may be maintained by the Department of Ecology, or down graded to [1]1, if appropriate.

Hanford Facility RCRA Permit Modification Notification Form

Unit:	Permit Part & Chapter:
305-B Storage Facility	**Part III, Chapter 2 and Attachment 18**

Description of Modification:

Chapter 7, Figure 7.3:

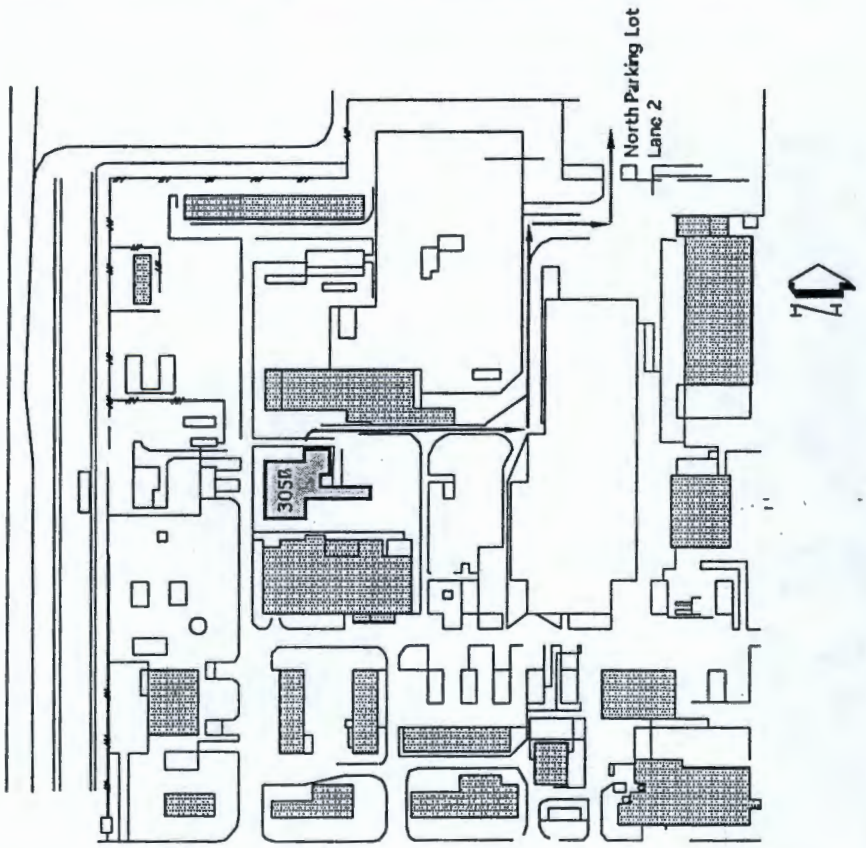

Modification Class: [1 2 3]	Class 1	Class [1]1	Class 2	Class 3
Please check one of the Classes:	X			

Relevant WAC 173-303-830, Appendix I Modification: A.1.

Enter wording of the modification from WAC 173-303-830, Appendix I citation:

A. General Permit Provisions
   1. Administrative and Informational changes.

Submitted by Co-Operator:	Reviewed by RL Program Office:	Reviewed by Ecology:	Reviewed by Ecology:
Alan K. Ikenberry 12/13/99	R.F. Christensen 1/4/00		
A.K. Ikenberry Date	R.F. Christensen Date	A.B. Stone Date	L.E. Ruud Date

[1]Class 1 modifications requiring prior Agency approval.

[2] This is only an advanced notification of an intended Class [1]1, 2, or 3 modification, this should be followed with a formal modification request, and consequently implement the required Public Involvement processes when required.

[3] If the proposed modification does not match any modification listed in WAC 173-303-830 Appendix I, then the proposed modification should automatically be given a Class 3 status. This status may be maintained by the Department of Ecology, or down graded to [1]1, if appropriate.

Hanford Facility RCRA Permit Modification Notification Form

Unit:	Permit Part & Chapter:
305-B Storage Facility	**Part III, Chapter 2 and Attachment 18**

Description of Modification:
Section 6.1.1.1, page 6-3, lines 6-12: This allows access for untrained staff to the office areas of the facility to perform routine maintenance on computer systems, and facility equipment.

Entry to the unit is controlled through the use of locked entrances. The 305-B Storage Unit is kept locked at all times except when in use. Physical control of keys and records of key distributions are maintained by PNNL Security. Distribution of keys to 305-B is subject to approval by the building manager, and the facility operating supervisor, and a list of those personnel in possession of keys is kept in the Operating Record for 305-B. Personnel in possession of keys have been instructed to admit only persons having official business. ~~Waste management organization personnel must escort all visitors to the unit.~~ 305-B facility staff must escort all untrained visitors (personnel without 24/40-hour hazawoper training) in the waste storage areas.

Modification Class: [1 2 3]	Class 1	Class[1]1	Class 2	Class 3
Please check one of the Classes:	X			

Relevant WAC 173-303-830, Appendix I Modification: A.1.

Enter wording of the modification from WAC 173-303-830, Appendix I citation:

A. General Permit Provisions
   1. Administrative and Informational changes.

Submitted by Co-Operator:		Reviewed by RL Program Office:		Reviewed by Ecology:		Reviewed by Ecology:	
A.K. Ikenberry	12/13/99 Date	R.F. Christensen	1/4/00 Date	A.B. Stone	Date	L.E. Ruud	Date

[1]Class 1 modifications requiring prior Agency approval.

[2] This is only an advanced notification of an intended Class [1]1, 2, or 3 modification, this should be followed with a formal modification request, and consequently implement the required Public Involvement processes when required.

[3] If the proposed modification does not match any modification listed in WAC 173-303-830 Appendix I, then the proposed modification should automatically be given a Class 3 status. This status may be maintained by the Department of Ecology, or down graded to [1]1, if appropriate.

Hanford Facility RCRA Permit Modification Notification Form	
Unit: **305-B Storage Facility**	Permit Part & Chapter: **Part III, Chapter 2 and Attachment 18**

Description of Modification:
Section 6.3.1.3, page 6-10, lines 31-35 and page 6-11, lines 1-5: The Halon extinguisher is being replaced with an ABC extinguisher.

Emergency Equipment [F-3a(3)]

Emergency equipment available for trained 305-B personnel includes portable fire extinguishers, a fire suppression system, spill response equipment, and decontamination equipment. Seven portable 10-lb ABC fire extinguishers, and one 15-lb (or larger) Class D fire extinguisher for combustible metals, ~~and one portable 14-lb Halon fire extinguisher~~ are available at various locations throughout 305-B, as shown in Figure 6-4. The 10-lb ABC extinguishers are located: (1) next to the east entrance; (2) northwest end of the basement; (3) southwest end of the high bay; (4) outside of the bulking module door; (5) north of Cell No. 4 entrance; and (6) north-west end of high bay. (7) office area. A 15-lb ABC extinguisher is located outside cell 7. The 15-lb (or larger) class D extinguisher is located on the exterior of the organics cell wall north of the entrance. ~~The one Halon fire extinguisher is located in the office area.~~

Modification Class: [1 2 3]	Class 1	Class[1]1	Class 2	Class 3
Please check one of the Classes:	X			

Relevant WAC 173-303-830, Appendix I Modification: A.1.

Enter wording of the modification from WAC 173-303-830, Appendix I citation:

A. General Permit Provisions
   1. Administrative and Informational changes

Submitted by Co-Operator:		Reviewed by RL Program Office:		Reviewed by Ecology:		Reviewed by Ecology:	
A.K. Ikenberry	Date	R.F. Christensen	Date	A.B. Stone	Date	L.E. Ruud	Date

[1]Class 1 modifications requiring prior Agency approval.

[2] This is only an advanced notification of an intended Class [1]1, 2, or 3 modification, this should be followed with a formal modification request, and consequently implement the required Public Involvement processes when required.

[3] If the proposed modification does not match any modification listed in WAC 173-303-830 Appendix I, then the proposed modification should automatically be given a Class 3 status. This status may be maintained by the Department of Ecology, or down graded to [1]1, if appropriate.

Hanford Facility RCRA Permit

305-B Storage Facility
Part III, Chapter 2, and Attachment 18

Replacement Chapters

Index

Chapter 6
Chapter 7
Chapter 8

6.0 CONTENTS

6.0 CONTENTS **6-I**
6.0 PROCEDURES TO PREVENT HAZARDS [F] **6-1**
6.1 SECURITY [F-1] 6-1
6.1.1 Security Procedures and Equipment [F-1a] *6-1*
6.1.1.1 24-Hour Surveillance System [F-1a(1)] 6-1
6.1.1.2 Warning Signs [F-1a(3)] 6-3
6.1.2 Waiver [F-1b(1), (2)] *6-3*
6.2 INSPECTION SCHEDULE [F-2] 6-3
6.2.1 General Inspection Requirements [F-2a] *6-3*
6.2.1.1 Types of Problems [F-2a(1)] 6-3
6.2.1.2 Frequency of Inspections [F-2a(2)] 6-7
6.2.2 Specific Process Inspection Requirements [F-2b] *6-7*
6.2.2.1 Container Inspection [F-2b(1)] 6-7
6.2.2.2 Tank Inspection [F-2b(2)] 6-9
6.2.2.3 Waste Pile Inspection [F-2b(3)] 6-9
6.2.2.4 Surface Impoundment Inspection [F-2b(4)] 6-9
6.2.2.5 Incinerator Inspection [F-2b(5)] 6-9
6.2.2.6 Landfill Inspection [F-2b(6)] 6-9
6.2.2.7 Land Treatment Facility Inspection [F-2b(7)] 6-9
6.3 WAIVER OR DOCUMENTATION OF PREPAREDNESS AND PREVENTION REQUIREMENTS [F-3] 6-9
6.3.1 Equipment Requirements [F-3a] *6-9*
6.3.1.1 Internal Communications [F-3a(1)] 6-9
6.3.1.2 External Communications [F-3a(2)] 6-10
6.3.1.3 Emergency Equipment [F-3a(3)] 6-10
6.3.1.4 Water for Fire Control [F-3a(4)] 6-11
6.3.2 Aisle Space Requirements [F-3b] *6-11*
6.4 PREVENTIVE PROCEDURES, STRUCTURES, AND EQUIPMENT [F-4] 6-11
6.4.1 Unloading Operations [F-4a] *6-11*
6.4.2 Run-Off [F-4b] *6-13*
6.4.3 Water Supplies [F-4c] *6-13*
6.4.4 Equipment and Power Failure [F-4d] *6-14*
6.4.5 Personnel Protection Equipment [F-4e] *6-14*
6.5 PREVENTION OF REACTION OF IGNITABLE, REACTIVE, OR INCOMPATIBLE WASTES [F-5] 6-14
6.5.1 Precautions to Prevent Ignition or Reaction of Ignitable or Reactive Waste [F-5a] *6-14*
6.5.2 General Precautions for Handling Ignitable or Reactive Waste and Mixing of Incompatible Waste [F-5b] *6-15*

FIGURES

FIGURE 6-1. NORMAL SITE ACCESS - ENTRANCE AT THE SOUTHERN END OF WISCONSIN AVENUE AND THE NORTH END OF THE 300 AREA BARRIER AND MEANS TO CONTROL ENTRY [F-1A(2)(A), (2)(B)] 6-2
FIGURE 6-2. MONTHLY INSPECTION CHECKLIST 6-8
FIGURE 6-3. 305-B STORAGE UNIT BUILDING PLAN AND LOCATION OF EMERGENCY EQUIPMENT 6-12

TABLES

TABLE 6-1. EMERGENCY SIGNALS AND RESPONSES 6-10

TABLE 6-2 . MATERIAL AND EQUIPMENT FOR SPILL CONTAINMENT AND CLEANUP 6-13

6.0 PROCEDURES TO PREVENT HAZARDS [F]

The 305-B Storage Unit is operated to minimize exposure of the general public and operating personnel to dangerous and mixed wastes.

6.1 SECURITY [F-1]

Security for 305-B is provided by a combination of the overall security system for the 300 Area, and a specific security system for the waste storage unit. The former controls access to the 300 Area proper, while the latter controls access to 305-B.

The 305-B Storage Unit is located within the Hanford 300 Area. As part of the Hanford Site, the 300 Area is subject to a restricted access and personnel security system for the protection of Government property, classified information, and special nuclear materials. The 300 Area is a controlled access area with access limited to persons authorized to enter and having appropriate security clearances or escorts.

The security program for 305-B, in addition to 300 Area access, is designed to limit building access to those personnel within the 300 Area authorized to enter the unit. Access to 305-B can be gained through five walk-in doors, and two large roll up doors, which facilitate loading and unloading activities. All doors to 305-B are kept locked at all times except when in use. All requests for keys are reviewed and approved by the unit operating supervisor and the building manager, and a record of the personnel issued keys is kept in the Operating Record at all times.

Keys to the unit are issued only to unit personnel, security personnel, and emergency response personnel. The unit operating supervisor approves any additions to this list, and the building. Specific aspects of the security programs for both the 300 Area and 305-B Storage Unit are described in more detail below.

6.1.1 Security Procedures and Equipment [F-1a]

The following sections describe the 24-hour surveillance system, barrier, and warning signs used to provide security and control access to the 305-B Storage Unit.

6.1.1.1 24-Hour Surveillance System [F-1a(1)]

The 305-B unit does not maintain a 24-hour surveillance system. Entrances to the building are kept locked except when the building is in use to prevent unauthorized access. Normal working hours for the unit is 8:00 A.M. to 4:30 P.M. Monday through Friday except holidays. The Hanford Patrol maintains frequent drive-by surveillance of the 300 Area buildings, including 305-B, on a 24-hour basis to ensure that no unauthorized access to the area has occurred.

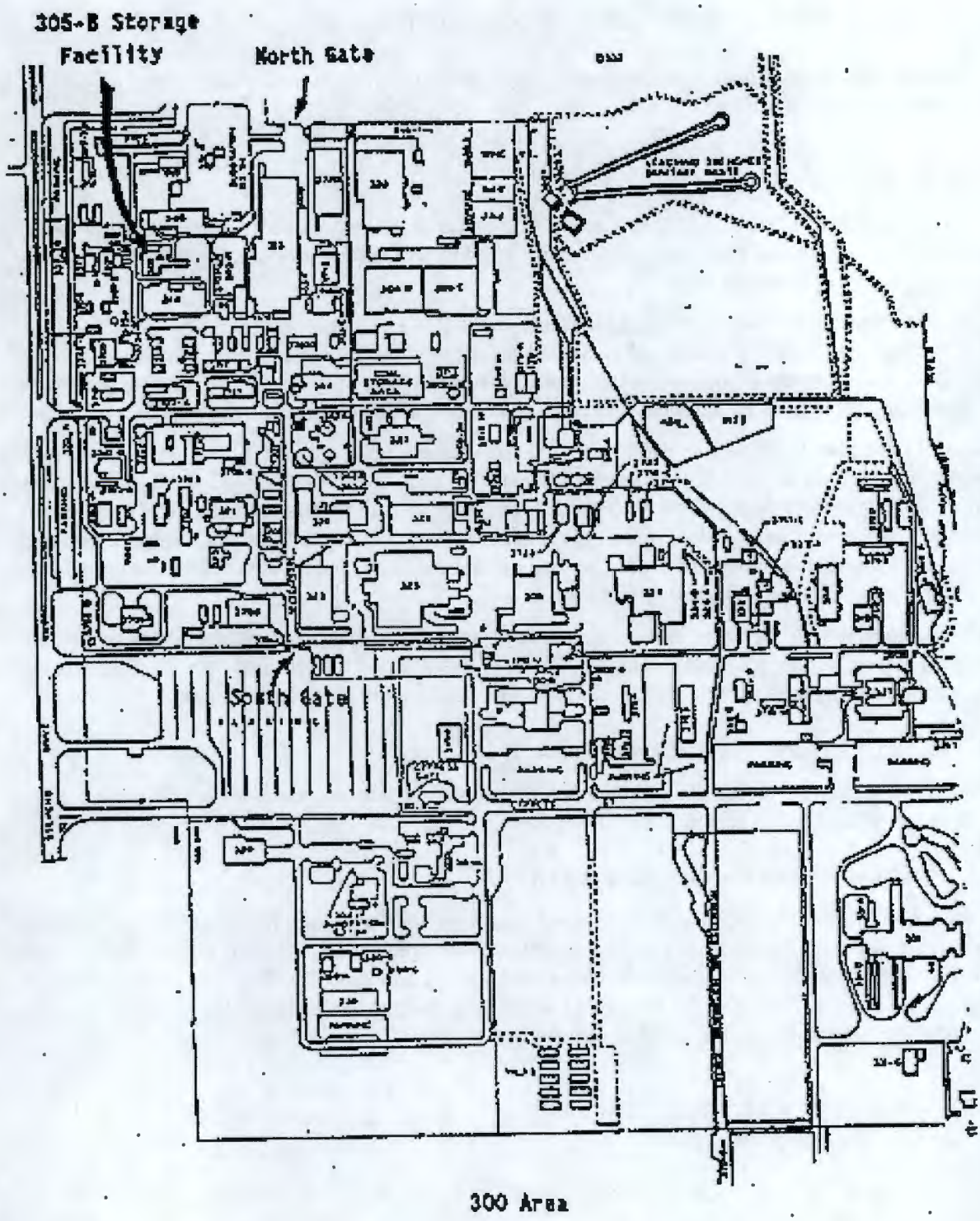

Figure 6-1. Normal Site Access - Entrance at the Southern End of Wisconsin Avenue and the North End of the 300 Area Barrier and Means to Control Entry [F-1a(2)(a), (2)(b)]

The entire 300 Area is surrounded by an 8-ft chain link fence topped with three strands of barbed wire. There is no separate fence surrounding the 305-B unit. All waste management activities, however, are conducted within the unit. The facility itself, therefore, provides a barrier completely surrounding the active waste management operations.

Entry to the unit is controlled through the use of locked entrances. The 305-B Storage Unit is kept locked at all times except when in use. Physical control of keys and records of key distributions are maintained by PNNL Security. Distribution of keys to 305-B is subject to approval by the building manager, and the facility operating supervisor, and a list of those personnel in possession of keys is kept in the Operating Record for 305-B. Personnel in possession of keys have been instructed to admit only persons having official business. 305-B facility staff must escort all untrained visitors (personnel without 24/40-hour hazawoper training) in the waste storage areas.

6.1.1.2 Warning Signs [F-1a(3)]

The 305-B Storage Unit is posted with "DANGER - UNAUTHORIZED PERSONNEL KEEP OUT" and "305-B CHEMICAL WASTE STORAGE BUILDING" signs near each entrance on all sides of the unit. The signs are clearly visible from the required distance of 25 ft.

6.1.2 Waiver [F-1b(1), (2)]

Waivers of the security procedures and equipment requirements for 305-B are not required and will not be requested.

6.2 INSPECTION SCHEDULE [F-2]

The purpose and intent of implementing inspection procedures at 305-B are to prevent malfunctions, deterioration, operator errors, and/or discharges which may cause or lead to the release of regulated waste to the environment or threats to human health. A system of daily, weekly, monthly, quarterly, once every four months, and annual inspections involving various PNNL departments and levels of management are implemented at 305-B.

6.2.1 General Inspection Requirements [F-2a]

The content and frequency of inspections performed at 305-B are described in this section. Also, described is maintenance of inspection records.

6.2.1.1 Types of Problems [F-2a(1)]

Daily, weekly, monthly, quarterly, once every four months, and annual inspections are performed at 305-B. The types of problems addressed by each of these inspections are described below.

Daily Inspections. The 305-B Storage Unit is inspected daily whenever waste packaging, transfer, shipping, or movement operations are being carried out. Daily inspections monitor container condition and integrity, the building waste containment system, and other building areas where wastes are handled. Specific inspection points include:

- Inspection of stored containers for leaks or damage
- Mislabeled or opened containers
- Improper storage (e.g., incompatible waste storage)
- Disorderliness or uncleanliness of a storage unit

- Check for accumulation of wastes in containment systems

Results of these daily inspections are recorded in the daily operating logbook, which is part of the permanent 305-B Operating Record.

Weekly Inspections. Waste management organization personnel conduct weekly inspections of both safety and operating equipment in 305-B. Safety and emergency equipment are inspected for functionality and adequacy of supply. The weekly inspection is conducted by two personnel on the last workday of each week using the inspection Logbook and the most current version of the Weekly Inspection Checklist Form that is on file at 305-B. An example of a Weekly Inspection Checklist is shown in Fig. 6-2. The Inspection Checklist and Inspection Logbook become a permanent part of the 305-B Operating Record.

Specific problems to be looked for with each of the items inspected are identified on the Inspection Checklist Form. The use of this form enhances inspection effectiveness by providing a consistent and detailed listing of areas of potential problems and those safeguards in place to prevent them. There is space provided on the form for the inventory summary, comments, required remedial actions (if any), as well as the date such actions are accomplished. The inspector is required to sign and date the inspection checklist after performing the inspection. In addition, a space is provided for the dated signature of the co-inspector. A copy of the completed inspection form with any assigned action items is distributed to the responsible operating personnel. All corrective actions required must be completed within one week of the inspection, which found them deficient, unless there are documentation and reason for further delay. When corrective action has been completed, the responsible personnel date and initial the form.

Monthly Inspections. Monthly oversight inspections are conducted by the manager of the Environmental Management Services Department or their designee. This monthly inspection is conducted on or near the last workday of each month using the most current version of the Monthly Inspection Checklist Form. An example of a Monthly Inspection Form is shown in (Fig. 6-3). Items targeted for monthly inspection include, but are not limited to, equipment function and condition, housekeeping, chemical inventory, weekly inspections and corresponding corrective actions, safety equipment operation, spill control and cleanup supplies, and general packaging material inventory. Specific problems to be looked for with each of the items inspected are identified on the Inspection Checklist Form. Copies of the inspection report memorandum are provided to operations personnel and maintained in the files of the waste management organization. Any corrective action noted on the management inspection checklist or deterioration or malfunctions in equipment discovered by the inspector are delegated to responsible individuals in the operations group. Corrective actions identified in the monthly management inspection must be completed before the next inspection cycle unless there are documentation and reason for further delay. Monthly management inspection reports memos and corrective action response documentation is part of the 305-B Operating Record.

Quarterly, Once Every Four Months, and Annual Inspections. In addition to the several layers of management inspection of 305-B, safety inspections are performed to assure the fire protection system, eye wash/shower unit, and walk-in hood ventilation system are in working order. The Hanford 300 Area Fire Department performs "once every four months" an inspection of fire suppressant and notification systems (i.e., sprinkler system and pull boxes). This inspection includes flow tests of the sprinklers to assure no blockage in the system lines as well as activation of the alarm system to assure proper operation of pull boxes. On an annual basis, the Fire Department performs a full inspection of the sprinkler system, heat detectors, and pull boxes. A complete flow test is performed from the furthest valve to assure flow through

Weekly Inspection Form

305-B Chemical Waste Storage Unit

Inspector Name (print): _____ Inspector Signature: _____ Time/Date: _____

Co-Inspector Name (print): _____ Co-Inspector Signature: _____ Time/Date: _____

Waste Containment Locations (Y=Yes, N=No)

Earliest PCB Accumulation Date in Cell 2: _____ **Earliest RMW PCB Accumulation Date:** _____

Cell:	1 Oxidizer Acids	2 Poison, PCB, Class 9	3 Caustic WSDW Non-Reg.	4 Flammable, Combustible, Aerosols	5 Flammable Bulking Cylinders	6 Asbestos	7 Non-Flammable RMW	8 Flammable Drum Storage	9 Flammable RMW	10 Non-Reg. Yard	11 WSDW, Class 9 Non-Reg. Drums	12 Oxidizer Drums	13 Acid Drums	14 Alkaline Drums	15 Explosives Magazine
Container integrity good?															
Containers properly sealed?															
Containers properly labeled?															
Containers properly segregated?															
floor free of major cracks/gaps?															
sumps empty and dry?															

Minimum aisle space present? _____ (44" leading to building exits, 36" all other aisles per NFPA 101, UBS 3315(b)1 and WAC 173-303

Inventory below 30, 000 gallon design capacity? _____ Estimated Volume = _____ gallons

Inventory below UBC Class B limits? _____ (<480 gallons 1-A, 1-B, 1-C total and/or <240 gallons 1B

daily inspections logged? _____

Figure 6-2. Example of Weekly Inspection Checklist Form. (Page 1 of 2)

Weekly Inspection Form
305-B Chemical Waste Storage Unit

Emergency Equipment and Supplies (Y=Yes, N=No)

North eyewash safety shower: clear access?	____	Inventory as noted and in working order?	____
South eyewash safety shower: clear access?	____	4 each full face respirators with combination organic vapor/HEPA filters?	____
Portable eyewash outside of east bay door pressurized?	____	4 each full face shields?	____
Spill control station stocked for acid, base, solvent and other spills?	____	6 each Tyvek suits?	____
Fire extinguishers (8) inspected and have clear access?	____	6 each acid suits?	____
Facility phone (376-4293) operational?	____	20 pair eye protection, glasses and/or goggles?	____
Facility public address system (376-1885) operational?	____	synthetic, rubber, leather gloves stocked?	____
Formaldehyde spill kit (Cell 2) fully stocked with 11 lbs neutralizer?	____	3 each SCBA units?	____

Corrective Action and/or Clean-up Performed

Action	Date Corrected

Figure 6-2. Example of Weekly Inspection Checklist Form. (Page 2 of 2)

the entire system. Fire extinguishers are also checked for proper pressure and function. Records of these fire inspections and their results are kept by the Hanford Fire Department. Documentation of any required corrective actions is kept in the 305-B Operating Record.

PNNL facilities support staff perform additional documented inspections of the two emergency eye wash/shower units, and the walk-in hood air flow. The safety showers and air flow of the walk-in hood are inspected quarterly. The emergency eyewash/safety showers are checked for proper operation, and the walk-in hood ventilation face velocity must meet a 125-fpm minimum requirement. Records of these safety equipment inspections and their results, as well as documentation of any required corrective actions, are maintained by the preventive maintenance staff in PNNL's Facilities Management Department and Technical Services Department.

6.2.1.2 Frequency of Inspections [F-2a(2)]

Inspections are conducted on a daily, weekly, monthly, quarterly, and annual basis, as described in Section 6.2.1.1.

The frequency of inspections is based on specific regulatory requirements and on the rate of possible deterioration of equipment and probability of environmental or human health incidents.

Areas where dangerous and mixed wastes are actively handled, including the high bay area, storage cells, and flammable liquid bulking module, are considered to be areas subject to spills. These areas are given daily inspections when in use, as required by WAC 173-303-320(2)(c).

The containment system (i.e., floors and sumps) is inspected daily when in use for accumulation of spilled material. The containment system itself is inspected weekly for structural integrity, (i.e., no cracks, gaps, leaks, etc. which could result in environmental release of wastes in the event of a spill). This frequency is based on the need to perform timely corrective actions in the event that problems are noted.

Aisle space between containers is inspected weekly. This frequency is based on the consideration of the rate of container transfers and movement within 305-B. Weekly inspections will allow container spacing problems to be identified and corrected before they become major problems.

Emergency and safety equipment and personal protective equipment is inspected weekly. This frequency is based on consideration of the expected rate of use of this equipment. Use of emergency equipment should not occur more than once during any one-week period. Weekly inspections will assure that this equipment is always functional and available in adequate supply.

6.2.2 Specific Process Inspection Requirements [F-2b]

The following sections detail the inspections to be performed at the 305-B Storage Unit.

6.2.2.1 Container Inspection [F-2b(1)]

When in use, dangerous and mixed waste storage areas, as well as containers stored at 305-B are inspected daily for leakage, evidence of damage or deterioration, proper and legible labeling, and proper lid and bung closure. When work is being performed, the containment system is also checked on a daily basis for accumulation of any wastes, which may have been spilled into them. Structural integrity of the containment systems is checked on a weekly basis.

1 **305-B MONTHLY MANAGEMENT INSPECTION CHECKLIST**

2

Date/Time _____ Inspector (Print/Sign) _____

	Check if Working/ Present	Comments*
Check for working condition:		
Lights		
Exhaust fans (2 in highbay)		
Eye wash/showers (3)		
Fire extinguishers		
Check housekeeping:		
Inside		
Outside		
Aisles/walkway clear		
Sumps dry		
Check waste storage:		
Weekly inspection conducted/filed?		
Facility crowded?		
Container condition		
Proper segregation		
Check supply and condition of safety equipment:		
Gloves - leather and disposable		
Goggles		
Face shields		
Coverall/lab coats		
Masks and cartridges		
Check spill control and cleanup supplies:		
Spill pillows – general		
Neutralizers		
Mercury		
Solvent		
Check packaging material:		
Drums - 5 gallon		
Drums - 30 gallon		
Drums - 55 gallon		
Absorbent - oil dry		
Absorbent – vermiculite		
Labels		
Marking supplies: pens/spray paint		

*Corrective actions are required within the next inspection cycle.

3

4 **Figure 6-2. Monthly Inspection Checklist**

Daily and weekly inspections are performed and documented in accordance with Section 6.2.1.1. Specific inspection items are enumerated in Section 6.2.1.1 in association with the inspection description and frequency. Response to problems, and documentation of corrective actions are as described in Section 6.2.1.1.

6.2.2.2 Tank Inspection [F-2b(2)]

This section does not apply to the 305-B Storage Unit because wastes are not stored or treated in tanks.

6.2.2.3 Waste Pile Inspection [F-2b(3)]

This section does not apply to the 305-B Storage Unit because wastes are not placed in waste piles.

6.2.2.4 Surface Impoundment Inspection [F-2b(4)]

This section does not apply to the 305-B Storage Unit because wastes are not placed in surface impoundments.

6.2.2.5 Incinerator Inspection [F-2b(5)]

This section does not apply to the 305-B Storage Unit because wastes are not incinerated.

6.2.2.6 Landfill Inspection [F-2b(6)]

This section does not apply to the 305-B Storage Unit because wastes are not placed in landfills.

6.2.2.7 Land Treatment Facility Inspection [F-2b(7)]

This section does not apply to the 305-B Storage Unit because wastes are not treated in land treatment units.

6.3 WAIVER OR DOCUMENTATION OF PREPAREDNESS AND PREVENTION REQUIREMENTS [F-3]

The following documents the preparedness and prevention measures taken at the 305-B Storage Unit.

6.3.1 Equipment Requirements [F-3a]

The following sections describe the internal and external communications and emergency equipment in use at 305-B.

6.3.1.1 Internal Communications [F-3a(1)]

Internal communication systems are used to provide immediate emergency instruction to personnel in 305-B. Internal communications address general emergencies which may occur in the 300 Area as well as specific emergencies which may occur in 305-B.

Because of the nature of activities, which occur in the 300 Area, the potential exists for emergencies outside of 305-B (e.g., release of radioactive materials) which could impact operations and staff in 305-B. For this reason, the general emergency signals for the 300 Area are applicable to 305-B. These signals are summarized in Table 6-1. Fire alarm signals are located in each building throughout the 300 Area. The nearest emergency siren for "area evacuation" and "take cover" is located 300 yards southeast of 305-B, on top of the 326 Building, and is audible in all parts of 305-B. Because fissile materials are not handled in 305-B, there is no criticality alarm for the unit.

Internal communications to provide emergency instruction in the event of an emergency in 305-B are fire alarms, public address (PA) system, and telephones. The fire alarms are to be used to provide notification for immediate evacuation of 305-B. Fire alarm pull boxes are located at all exits of the facility such that operating personnel have immediate access to one in all portions of 305-B. Four fire alarm bells are located within the 305-B and are audible at all locations within the building. The locations of the fire alarm bells are shown in Figure 6-4 and are as follows: (1) an office wing on the northeast hall; (2) an office wing next to the east entrance; (3) on the south wall of the basement; and (4) on the northeast wall of the high bay. The PA system is to be used for building-wide broadcasting of verbal emergency instructions to 305-B staff. The PA system can be accessed from any unit telephone by dialing 6-1885. The PA system speakers are located in the high bay, in the basement, and in the office wing of 305-B.

Table 6-1. Emergency Signals and Responses

Signal	Meaning	Response
Gong	Fire	Evacuate building. Move upwind. Keep clear of emergency vehicles.
Siren - steady 3-5 minute blast	Area Evacuation	Proceed promptly to north parking area. Stand by to follow instructions from emergency director.
Wavering Siren	Take Cover	Close up the 305-B Building, turn off all intake ventilation and go to the 314 Building south of the facility. Contact Laboratory Safety (337 Building) with your whereabouts. If this cannot be accomplished, stay in the 305-B Building until notified that it is safe to leave
Howler (Aa-oo-gah)	Criticality	Run immediately at least 100 yards away from the signal and take cover. Personnel inside the 305-B Building should follow the "take cover" procedure and wait for further instructions.
ALL EMERGENCY SIGNALS CAN BE HEARD BY PHONING 373-2345		

The telephone system is to be used to provide verbal emergency instructions to 305-B staff. The telephone can also be used to verbally transmit emergency data to non-305-B staff, and to request emergency services. A network of telephones covers both floors of the facility. Locations of telephones are shown in Figure 6-4. In addition to the telephone communication system at 305-B, operation personal have access to hand held radios.

6.3.1.2 External Communications [F-3a(2)]

As mentioned in Section 6.3.1.1 above, both a fire alarm system and telephone network system are in place at 305-B. Both systems can be used to summon emergency assistance. The fire alarm system summons direct response from the Hanford Fire Department's 300 Area Station. The telephone system can be used to access Hanford's Emergency Network directly at 375-2400 or by dialing the emergency number, 911. Locations of fire alarm pull boxes and telephones are given in Figure 6-4.

6.3.1.3 Emergency Equipment [F-3a(3)]

Emergency equipment available for trained 305-B personnel includes portable fire extinguishers, a fire suppression system, spill response equipment, and decontamination equipment. Seven portable 10-lb ABC fire extinguishers, and one 15-lb (or larger) Class D fire extinguisher for combustible metals, are available at various locations throughout 305-B, as shown in Figure 6-4. The 10-lb ABC extinguishers are located: (1) next to the east entrance; (2) northwest end of the basement; (3) southwest end of the

high bay; (4) outside of the bulking module door; (5) north of Cell No. 4 entrance; and (6) north-west end of high bay. (7) office area. A 15-lb ABC extinguisher is located outside cell 7. The 15-lb (or larger) class D extinguisher is located on the exterior of the organics cell wall north of the entrance.

The facility is also equipped with an automatic fire suppression system consisting of galvanized steel, schedule 40 per ASTM A120 pipe and 150-lb malleable iron per ANSI B16.3 fittings. All components are UL-listed or FM-approved, and installation of the fire sprinkler system has been conducted in accordance with NFPA 13 for ordinary hazard. Spill cleanup supplies and equipment maintained are summarized in Table 6-2. Two emergency eye wash/showers are available for emergency personnel decontamination. The locations of the emergency eye wash/showers are shown in Figure 6-4. If needed, additional emergency equipment can be provided by the Hanford Fire Department. Emergency equipment available through the Hanford Fire Department for hazardous materials response is identified in Appendix 6A.

6.3.1.4 Water for Fire Control [F-3a(4)]

Adequate water volume and pressure are supplied by the large diameter line, which services 305-B for potable use and fire protection. Three fire hydrants are located in immediate proximity to serve the 305-B facility: (1) 80 ft directly north of the northwest corner of 305-B; (2) 40 ft directly south of the southwest corner of 305-B; and (3) 60 ft directly east of the southeast corner of 305-B. In addition, the Hanford Fire Department's 300 Area Station is located within 0.25 mile of 305-B.

6.3.2 Aisle Space Requirements [F-3b]

Containers stored in the 305-B unit are placed to provide aisle space clearance in accordance with WAC 173-303-340(3) and applicable standards of the Uniform Building Code and Life Safety Code. The proper maintenance of aisle space is inspected weekly and noted on the weekly inspection checklist (Figure 6-2).

6.4 PREVENTIVE PROCEDURES, STRUCTURES, AND EQUIPMENT [F-4]

The following sections describe preventive procedures, structures, and equipment.

6.4.1 Unloading Operations [F-4a]

Procedures have been developed at 305-B to prevent hazards and minimize the potential for breakage, punctures, or the accidental opening of containers during waste unloading. All waste unloading is performed inside the 305-B Storage Unit. The large bay door is opened and the appropriate transporting vehicle (usually a pickup truck) is driven inside. As described in Section 4.1.1.3, the unloading area has secondary containment. By unloading all wastes inside the fully-contained facility, spills during unloading operations will be contained. Procedures for unloading and transferring wastes to storage areas have been designed to minimize hazards. All wastes are inspected prior to shipment to 305-B to ensure that they are in appropriate containers and that the containers are in good condition. Inspection of containers prior to acceptance at 305-B minimizes the potential for spills during unloading operations. The potential for spills during waste handling is minimized through the use of appropriate container handling equipment. Large waste items such as drums of nonflammable RMW are lowered into the basement of the facility for storage using an overhead crane or winch assembly. The containers are immediately transported, via a hand lift, into the concrete lined storage vault. Forklifts may also be used to unload heavy waste items. Small waste items can be unloaded by hand. Each small waste item is removed from the secondary containment unit in which it was transported (i.e., plastic storage tub) and placed in the appropriate storage location.

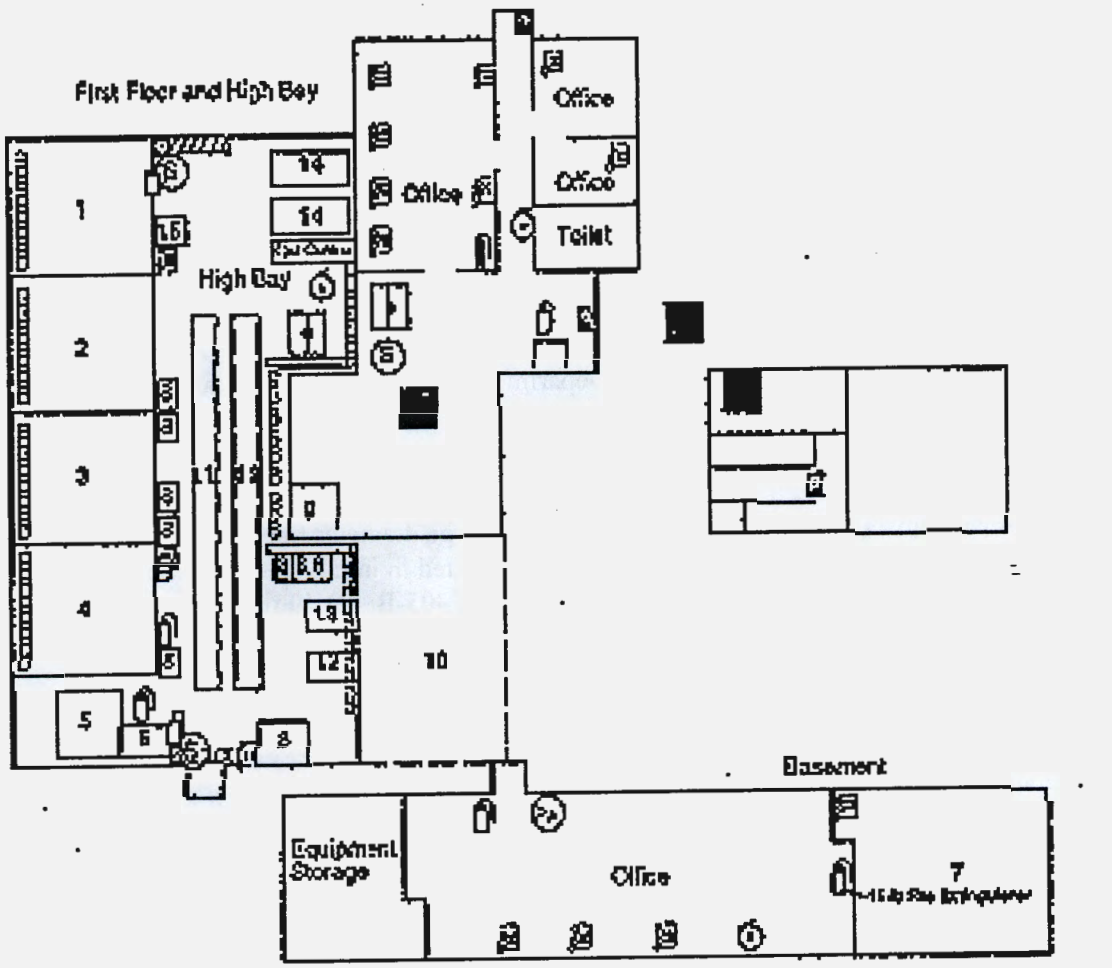

Legend

1. Acids, Oxidizers
2. Poisons, Class B's
3. Alkalines, WSDW, Organic Peroxides
4. Organics and Compressed Aerosols
5. Flammable Liquid Bulking Module and compressed gases
6. Asbestos Cabinet
7. RMW Storage Cell
8. Flammable Storage
9. Small Quantity Flammable RMW
10. Outdoor Non-Regulated Drum Storage
11. WSDW/DRM/Non-Reg Drums
12. Oxidizer Drums
13. Acid Drums
14. Alkaline Drums
15. Explosives Magazine

Safety Shower/Eyewash
Phone
Fire Alarm Bell
Fire Alarm Pull Box
14-lb Halon Fire Extinguisher
10-lb ABC Fire Extinguisher
15-lb or larger Class D Fire Extinguisher
Removable Access to Basement
Emergency Equipment Cabinet
Collection Sumps

Figure 6-3. 305-B Storage Unit Building Plan and Location of Emergency Equipment

Table 6-2 . Material and Equipment for Spill Containment and Cleanup

Materials/Equipment			Notes
Diatomaceous Earth	30-gallon drum	To absorb small spills of oils, solvents, aqueous materials. Not used for acids or caustics unless first neutralized.	Stored in high bay of 305-B.
Vermiculite	55-gallon drum	To absorb small spills of oils, solvents, aqueous materials. Not used for acids or caustics unless first neutralized.	Stored in high bay of 305-B.
Absorbent Pillows or Booms	Three cartons, each containing booms or 12 pillows	To be used for diking or damming and absorption of spilled materials	Each boom or pillow can absorb slightly more than 1 L of liquid.
Acid- and base-specific and solvent absorbents or neutralizers	50-lb box of each in 305-B, and a 32-oz bottle of each in transport vehicle.	Neutralization of known chemical spills.	J.T. Baker™ brand or equivalent.
Citric Acid	30-gallon drum	Neutralization of alkaline spills	Stored in high bay of 305-B.
Sodium Bicarbonate	30-gallon drum	Neutralization of acid spills.	Stored in high bay of 305-B.

6.4.2 Run-Off [F-4b]

The 305-B Storage Unit was designed to eliminate the likelihood of off-site migration via run-off. Because the facility is completely enclosed (i.e., complete roof and no open walls), run-off of precipitation is not a factor. In addition, floors are bermed and sloped toward sumps in the loading/unloading area and each storage cell is similarly bermed, sloped, and individually sumped to eliminate the possibility of spills interacting or migrating offsite. The main high bay area and each storage cell are fully contained by at least a 6-in. high dike or ramp. Each door from the waste handling areas to the outside has a collection trench to intercept any potential run-off. The containment system for 305-B is described in more detail in Section 4.1.1.3.

6.4.3 Water Supplies [F-4c]

305-B is designed and operated to safely contain wastes and prevent any contamination of water supplies. The containment system described in Section 4.1.1.3 prevents infiltration of wastes, which could contaminate groundwater and prevents run-off of wastes, which could contaminate surface water. The nearest water supply is the 300 Area water intake, which is located on the Columbia River 0.5 mile from 305-B.

6.4.4 Equipment and Power Failure [F-4d]

The 305-B Storage Unit does not have any systems, which would cause release of dangerous waste or RMW during a power failure or equipment failure. Interruption of power to any of the systems utilizing electrical power (HVAC system, crane, forklift) merely causes the equipment to stop operating. The unit has an emergency lighting system, which operates automatically during power failure incidents.

For actions to be taken in the event of power failure to unit systems or equipment, see the unit Contingency Plan (Section 7).

6.4.5 Personnel Protection Equipment [F-4e]

Protective clothing and equipment are provided to employees during normal and emergency operations. During routine operations, the maximum number of employees working in the 305-B unit is less than fifteen. For dry chemical handling activities, such as labpacking, the minimum protection requirement is eye protection (safety glasses with side shields or chemical goggles), lab coat, and chemical resistant gloves (plastic or other construction as appropriate). Protection levels for other operations, such as bulking, and emergency situations are determined in consultation with a PNNL industrial hygienist, and staffing levels are revised according to the availability of proper protective equipment as shown below. Protective clothing and equipment available in the 305-B Storage Unit includes:

- 6 sets of chemically resistant suits, aprons, boots, and gloves
- 20 pairs of extra protective eyeglasses
- 3 SCBA
- 5 pairs of chemical goggles
- 4 face shields
- 4 full-face respirators with appropriate cartridges.

This protective equipment is stored in cabinets located outside of the operating area east entrance and is well stocked at all times. The location of the storage cabinets is given in Figure 6-4. This equipment is periodically replaced as it is used. The above inventory reflects the quantities of each type of PPE that are typically present at 305-B. Minimum quantities required to be present are given in the weekly inspection checklist, Figure 6-2.

6.5 PREVENTION OF REACTION OF IGNITABLE, REACTIVE, OR INCOMPATIBLE WASTES [F-5]

The following sections describe prevention of reaction of ignitable, reactive, and incompatible waste.

6.5.1 Precautions to Prevent Ignition or Reaction of Ignitable or Reactive Waste [F-5a]

305-B may be used to store a variety of ignitable wastes. Precautions to prevent ignition of ignitable wastes involve separation of wastes from sources of ignition and use of procedures, which minimize the potential for accidental ignition. There are no routine sources of ignition or open flame in 305-B. Work with ignition or heat sources, if required, is limited and controlled by PNNL management and is performed in compliance with internal PNNL health and safety procedures for elimination of ignition sources. These internal procedures:

- Prohibit use of open flame equipment when working with flammable liquids
- Prohibit smoking around flammable liquids [No smoking is allowed at 305-B]

- Require electrical equipment used in flammable or explosive atmospheres to comply with the National Electrical Code, NFPA 70
- Require use of equipment with automatic, adjustable temperature controls and high-temperature limit switches to prevent overheating
- Prohibit placement of flammable liquids on hot surfaces
- Require all static electricity sources to be grounded in areas where ignitable vapors may be present
- Require bonding of conductive containers when transferring flammable liquids.
- Require use of non-sparking tools in flammable waste storage areas

All maintenance or modifications that require work with ignition sources must receive prior approval by a PNNL Safety Engineer. Smoking is not allowed in 305-B at any time and the interior and exterior of the facility are clearly posted with "No Smoking" signs. Waste storage areas are not heated by any radiant heat source. All tools used to open ignitable waste containers are constructed of nonsparking materials.

Ignitable waste storage areas are inspected annually by a PNNL fire safety engineer familiar with the Uniform Fire Code. This inspection is documented in the Operating Record. There are also storage restrictions at 305-B for combustible wastes as part of fire safety requirements. The storage restrictions defined in the Uniform Building Code for Class B Occupancy apply to 305-B (International Conference of Building Officials 1988). The weekly inspection for 305-B includes checking to see if the inventory of combustibles is below these limits. These inspections are documented in the Operating Record.

6.5.2 General Precautions for Handling Ignitable or Reactive Waste and Mixing of Incompatible Waste [F-5b]

As described in Section 6.5.1, ignitable wastes are managed in a manner, which protects the wastes from sources of ignition or open flame. Ignitable waste containers are maintained in good condition and inspected weekly to minimize the potential for releases which could result in fire. Containers of ignitable waste are protected from high temperature to prevent the potential for pressurization and buildup of ignitable vapors. Containers of ignitable waste are stored in flammable material storage cabinets within waste storage cells, as described in Section 4.1.1.6. Limitations on sizes of containers and amounts of storage in cabinets are found in Section 4.3.1.

Because of the wide variety of wastes, which may be accepted at 305-B, the potential exists for storage of incompatible wastes. Mixing of incompatible wastes is prevented through waste segregation and storage procedures. Chemical wastes stored in 305-B are separated by compatibility and hazard class and stored in separate storage cells. Separate storage shelves and cabinets are used within the storage cells, as described in Section 4.1.1.6, to provide further waste segregation. The following general guidance is used to segregate and separate chemicals:

- Store acids on a low storage shelf or in acid storage cabinets.
- Separate acids from bases and alkaline metals such as potassium or sodium
- Separate oxidizing acids from organic acids and flammable or combustible materials
- Store bases away from acids and store solutions of inorganic hydroxides in polyethylene containers
- Store oxidizers away from flammable or combustible materials and reducing agents such as zinc, alkaline metals, and formic acid

- Store peroxide-forming chemicals in airtight containers in a dark, cool, and dry place (inside of cabinets)
- Store flammable materials in approved containers or cabinets
- Separate flammable materials from oxidizing acids and oxidizers and keep them away from sources of ignition
- Clearly mark cabinets to identify the hazards associated with their contents.
- The potential for waste ignition or reaction at 305-B is also minimized through storage restrictions on hazardous material quantities. The storage restrictions defined in the Uniform Building Code for Class B Occupancy apply to 305-B (International Conference of Building Officials 1988). The weekly inspection of 305-B includes checking to see if waste inventories are below these limits. These inspections are documented in the Operating Record.

CONTENTS

7.0 CONTINGENCY PLAN [G] 1

7.1 GENERAL INFORMATION [G-1] 1
7.2 EMERGENCY COORDINATORS [G-2] 2
7.3 IMPLEMENTATION OF THE CONTINGENCY PLAN [G-3] 2
7.4 EMERGENCY RESPONSE PROCEDURES [G-4] 2
7.4.1 Notification [G-4a] 2
7.4.2 Identification of Hazardous/Dangerous Materials [G-4b] 4
7.4.3 Hazard Assessment [G-4c] 4
7.4.4 Control Procedures [G-4d] 4
7.4.5 Prevention of Recurrence or Spread of Fires, Explosions, or Releases [G-4e] 9
7.4.6 Storage and Treatment of Released Material [G-4f] 9
7.4.7 Post-Emergency Equipment Maintenance [G-4h] 10
7.4.8 Response to Container Spills or Leaks [G-4i] 10
7.4.9 Response to Tank Spills or Leaks [G-4j] 11
7.4.10 Surface Impoundment Spills and Leakage [G-4k] 11
7.4.11 Waste Pile Spills and Leakage [G-4l] 11
7.4.12 Incineration Spills and Leakage [G-4m] 11
7.4.13 Landfill Leakage [G-4n] 11
7.4.14 Land Treatment Facility Spills and Leakage [G-4o] 11
7.5 EMERGENCY EQUIPMENT [G-5] 11
7.5.1 Communication Equipment 11
7.5.2 Fire Control Equipment 11
7.5.3 Personal Protective Equipment 12
7.5.4 Spill Control and Containment Supplies 12
7.5.5 Hanford Site Emergency Equipment 14
7.6 COORDINATION AGREEMENTS [G-6] 14
7.6.1 Local, State, and Federal Authorities 14
7.6.2 Hanford Fire Department Mutual Aid 14
7.6.3 Medical and First Aid 14
7.6.4 Ambulance Service 15
7.6.5 Unified Dose Assessment Center 15
7.6.6 Hanford Patrol Mutual Aid 15
7.6.7 River Evacuation 15
7.6.8 Meteorological Information 16
7.6.9 Washington Public Power Supply System 16
7.7 EVACUATION PLAN [G-7] 16
7.8 REQUIRED REPORTS [G-8] 19
7.8.1 Report to Ecology/EPA 19
7.8.2 DOE Occurrence Reporting 19
7.8.3 Off-Normal Event Reporting 19
7.9 CONTINGENCY PLAN LOCATION 20

FIGURES

Figure 7-1. 305-B Storage Unit Emergency Equipment Locations 7-14
Figure 7-2. 305-B Evacuation Exits 7-19
Figure 7-3. 305-B Evacuation Route 7-20

This page intentionally left blank.

7.0 CONTINGENCY PLAN [G]

The information contained in this chapter is the unit contingency plan, as required under WAC 173-303-806(4)(a)(vii). This chapter is also the Building Emergency Plan (BEP) as required under the DOE-RL Hanford Emergency Response Plan and PNNL Manual, PNL-MA-11. It supersedes all previous contingency plans and building emergency plans (BEPs). It is to be maintained in the locations shown in Section 7.9 of this plan.

A BEP is required under the DOE-RL Hanford Emergency Response Plan for each building on the Hanford Site. This Contingency Plan has been designed to meet the requirements for a BEP as well as the Ecology requirements for a contingency plan for the 305-B unit. The Hanford Emergency Response Plan details the membership of the DOE-RL Site Management Team (SMT) mentioned in Section 7.4 and following sections, and the procedure for notifying and mobilizing the team.

This plan provides for the safety of employees, other contractor personnel, visitors, and members of the general public in the event of an emergency. It also is designed to minimize hazards resulting from fires, explosions, or any other unplanned sudden or non-sudden release of dangerous waste or dangerous waste constituents to air, soil, or water. The provisions of the plan will be carried out immediately whenever there is a fire, explosion, or release of dangerous waste or dangerous waste constituents, which could threaten human health or the environment.

DOE-RL or PNNL shall review and immediately amend, if necessary, this plan whenever:

- Applicable regulations or the facility permit are revised;
- The plan fails in an emergency;
- The facility changes (in its design, construction, operation, maintenance, or other circumstances) in a way that materially increases the potential for fires, explosions, or releases of dangerous waste or dangerous waste constituents, or in any way that changes the response necessary in an emergency;
- The list of emergency coordinators changes; or
- The list of emergency equipment changes.

Amendments to the plan, if necessary following review, will be made in accordance with Section 1.5 of the 305-B Part B permit application.

7.1 GENERAL INFORMATION [G-1]

The 305-B Storage Unit is a dangerous and radioactive mixed waste storage facility located in the 300 Area of the Hanford Site. The unit is owned and operated by DOE-RL and co-operated by PNNL. It is used for the collection, consolidation, and packaging of containerized dangerous and radioactive mixed waste. Typically, 305-B handles various types of small volume wastes from research laboratory activities. A more detailed description of 305-B activities is located in Chapter 2.

7.2 EMERGENCY COORDINATORS [G-2]

The overall responsibility for implementation of this Plan lies with the Building Emergency Director (BED) or the designated alternates. The BED has the responsibilities of the Emergency Coordinator as named in WAC 173-303-360. The BED and alternates are on call 24 hours per day and have the authority to commit all necessary resources (both equipment and personnel) to respond to any facility emergency.

Response by an emergency coordinator is usually obtained through the PNNL Single Point Contact at (509) 375-2400. The Single Point Contact has been designated as the contact point to mobilize a response to any PNNL emergency on the Hanford Site. The Single Point Contact is available at all times and has the responsibility to contact the BED or alternate to begin responses to emergencies under this plan.

Due to the security requirements at the Hanford Site, DOE-RL does not submit names or phone numbers of personnel acting as emergency contacts as part of permit applications or other public documents. All emergency notifications to the BED, building managers, etc. are made through the PNNL Single Point Contact. A complete Building Emergency Organization listing of positions, names, work and home telephone numbers for the 305-B Unit is maintained in a separate, internally controlled, facility document. Copies are distributed, as a minimum, to appropriate facility locations, the Single Point Contact, and with the contingency plan at the 305-B Unit.

7.3 IMPLEMENTATION OF THE CONTINGENCY PLAN [G-3]

The decision by the BED or alternate to implement this Plan depends on whether an incident in progress may threaten human health or the environment. Immediately after being notified of an emergency, the BED or alternate will go to the site and evaluate the situation. Based on evaluation of the event, the BED or alternate will implement this plan to the extent necessary to protect human health or the environment. Incidents discovered by unit personnel trained in emergency response may be responded to according to the procedures given in this plan prior to the arrival of the BED. However, immediate notification of the BED is still required prior to implementing these procedures.

7.4 EMERGENCY RESPONSE PROCEDURES [G-4]

Emergency response procedures have been established for the 305-B Storage Unit and are described below.

7.4.1 Notification [G-4a]

<u>Discoverer</u>

1. If within the unit, notify unit personnel of discovery of spill or release.
2. Immediately notify the PNNL Single Point Contact (375-2400) and provide all known information, including:
   - Name(s) of chemical(s) involved and amount(s) spilled, on fire, or otherwise involved, or threatened by, the incident.
   - Name and callback phone number of person reporting the incident.
   - Location of spill or discharge (pinpoint as closely as possible).
   - Time incident began or was discovered.

- Where the materials involved are going or may go, such as into secondary containment, under doors, through air ducts, etc.
- Source and cause, if known, of spill or discharge.
- Name(s) of anyone contaminated or injured in connection with the incident.
- Any corrective actions in progress.
- Anyone else who the caller has contacted.

NOTE: DOE-RL and other (non-PNNL) contractor personnel are trained to notify Hanford Emergency number (911 from onsite telephones) operated by the Hanford Patrol who then notifies the PNNL Single Point Contact.

Single Point Contact

1. The single point contact will notify the BED or one of his alternates if the BED cannot be immediately reached, to arrange immediate response to the incident.
2. The single point contact will arrange for immediate response from Hanford Fire Department for fire or ambulance services as needed based on the report of the discoverer.
3. The single point contact will notify EMSD of the spill or release incident.
4. The single point contact will support the BED in providing further notification and coordination of response activities if needed. Potential activities requiring single point contact participation are:
   - Activate the general evacuation alarm for the 300 Area, if the BED determines that evacuation is necessary.
   - Notify the Emergency Operations Center (EOC) operated for DOE by Project Hanford Management Contractor (PHMC) if evacuation of the 300 Area or adjacent areas is necessary.
   - Notify the DOE-RL Site Management Team (SMT) in accordance with the Hanford Emergency Response Plan if necessary to evacuate areas lying outside the Hanford Site.
   - Any other activities found in the DOE-RL Hanford Emergency Response Plan.

Building Emergency Director (BED) (or alternate)

1. Notify the Single Point Contact if an evacuation is needed. EXCEPTION: If only 305-B needs to be evacuated, activate the fire alarm first, then notify the Single Point Contact.
2. Arrange for care of any injured employees, utilizing the Single Point Contact for notification of ambulance services.
3. Notify the Single Point Contact of any need to activate the Emergency Operations Center (EOC) described in the Hanford Emergency Response Plan. Activation of the EOC should be done whenever technical assistance in evaluating a spill is required, when the emergency may affect other neighboring buildings, or when otherwise deemed necessary by the BED. See Section 7.5.5.
4. Provide for off-normal event notification in accordance with DOE Order 232.1, PNL-MA-07, and PNL-MA-11 and other established site procedures, within 30 minutes of discovery. (Normally this is done through the Single Point Contact.)
5. Provide details on incident to ES&H, as they become available.

Environmental, Safety & Health

1. Provide telephone notification of incident to DOE-RL contact personnel. Sections 12.4.1.5.1 and 12.4.1.6 of the permit application.

DOE-RL

1. Provide notification of releases to the National Response Center and to Ecology in accordance with the site-wide hazardous waste permit, 40 CFR 302.6, and WAC 173-303-145.

7.4.2 Identification of Hazardous/Dangerous Materials [G-4b]

The BED or alternate will immediately identify the character, exact source, amount, and extent of the hazardous material or dangerous wastes involved in the incident to the degree possible. Identification of waste may be made by visual inspection of involved containers, by sampling, by reference to facility inventory records or shipping manifests, or by consulting with unit operations personnel. The 305-B operating record includes information on the characteristics and storage location of all wastes stored in the unit.

This information is referenced to container identification numbers and can be used to identify containers involved in the emergency.

Samples of materials involved in an emergency can be analyzed by PNNL, HEHF, or other analytical laboratories as appropriate. Samples of spilled or released material(s) shall be taken in accordance with the WAP found in Section 3.2.

7.4.3 Hazard Assessment [G-4c]

Once the materials involved in the incident have been identified by the procedure above, it should be possible to determine the extent of the danger posed by the incident. The BED or alternate on scene should assess both direct and indirect hazards posed by the incident. The EOC is available to assist the BED if needed. Possible aid may be in the form of determining the extent of an emergency, identifying the hazards associated with the materials involved in the incident, assisting in response to the incident, or coordinating the mobilization of special equipment or supplies to the incident site.

If assessment of all available information does not yield a positive assessment of the danger posed by the incident, a worst-case condition will be presumed and evacuation procedures will be initiated. The BED (or alternate) present on scene is responsible to initiate any evacuation through the steps shown in Section 7.4.1 above.

7.4.4 Control Procedures [G-4d]

The initial response to any emergency will be to immediately protect the health and safety of persons in the immediate area. Identification, containment, treatment, and disposal assessment will be the secondary response.

The following is presented to define specific emergency actions for personnel assigned to 305-B for different types of emergencies which could be encountered during normal operations.

7.4.4.1 Area-wide Evacuation. (Signal: Steady siren of 3-5 minutes' duration) In the event of an area-wide evacuation of the 300 Area, 305-B personnel will shut down equipment, secure wastes (especially RMW), and secure classified documents (or carry them with them), if time permits. They will then report to the north parking lot accountability area. The zone warden will account for all facility personnel.

7.4.4.2 Take Cover. (Signal: Wavering siren) In the event a take cover alarm is sounded, 305-B personnel will stay inside the 305-B Storage Unit, close all exterior doors, and turn off all intake ventilation. They will secure all wastes and classified documents. Personnel will then contact Environmental Management Services with their whereabouts and request a call back for status.

7.4.4.3 Response to Minor Spills or Releases. (Signal: None) Unit personnel will generally perform immediate cleanup of minor spills or releases using unit equipment, absorbents and emergency equipment noted in Section 7.5. Personnel detecting such spills or releases shall contact the PNNL Single Point

Contact (375-2400) to notify of the detection of such release and arrange for notification of the BED. For spills or releases occurring within individual storage cells during routine handling and storage, see Section 4.1.1.8.

A spill or release of hazardous material or dangerous waste is considered "minor" if all of the following are true:

- The spill is minor in size (generally less than five gallons of liquid or 50 lbs. of solids);
- The composition of the material or waste is known or can be immediately determined from label, manifest, MSDS, or disposal request information;
- The spill does not threaten the health and safety of building occupants, i.e. an evacuation is not necessary;
- Unit personnel have received appropriate training in accordance with Section 8.1.5; and
- Unit personnel have appropriate protective equipment, respiratory protection, and emergency response equipment to immediately respond and remediate the spill or release.

If one or more of the foregoing conditions are not met, the provisions of Section 7.4.4.4 should be followed.

Notification of the spill shall take place as shown in Section 7.4.1.

7.4.4.4 Major Dangerous Waste and/or RMW Spill or Material Release. (Signal: None) The following actions will be taken in the event of a major release:

<u>Discoverer</u>

1. If within the unit, notify unit personnel of discovery of spill or release by sounding the fire alarm.
2. Immediately notify the PNNL Single Point Contact (375-2400) and provide all known information, including:
    - Name(s) of chemical(s) involved and amount(s) spilled, on fire, or otherwise involved, or threatened by, the incident.
    - Name and callback phone number of person reporting the incident.
    - Location of spill or discharge (pinpoint as closely as possible).
    - Time incident began or was discovered.
    - Where the materials involved are going or may go, such as into secondary containment, under doors, through air ducts, etc.
    - Source and cause, if known, of spill or discharge.
    - Name(s) of anyone contaminated or injured in connection with the incident.
    - Any corrective actions in progress.
    - Anyone else who the caller has contacted.
3. Take action to contain and/or stop the spill if all of the following are true:
    - The identity of the substance(s) involved is known;
    - Appropriate protective equipment and control/cleanup supplies are immediately available;
    - The employee can perform the action(s) contemplated without assistance, or assistance is immediately available from other trained unit employees; and

- Time is of the essence; i.e. the spill/discharge will get worse if immediate action is not taken.

If any of the above conditions are not met, or there is doubt, the employee should evacuate the area and remain outside the unit and upwind from it pending the arrival of the BED. He/she should remain available for consultation with the BED, Hanford Fire Department, or other emergency response personnel.

Single Point Contact

1. The single point contact will notify the BED or one of the alternates if the BED cannot be immediately reached, to arrange immediate response to the incident.
2. The single point contact will remain available to the BED to support further notification and response activities if needed. Potential activities requiring single point contact participation are shown in Section 7.4.1 and in the DOE-RL Hanford Emergency Response Plan.

Building Emergency Director (BED) (or alternate)

1. Go directly to the unit to coordinate further activity. Take command of the scene from discovering unit employee.
2. Obtain all immediately available information pertaining to the incident. Determine need for assistance from agencies listed in Section 7.6 and arrange for their mobilization and response through the Single Point Contact.
3. If building evacuation is necessary, sound the fire alarm.
4. Arrange for care of any injured employees, and provide for any additional help necessary to safely evacuate any disabled staff or visitors.
5. If a threat to surrounding facilities/operations exists. The BED (or alternate) will identify the hazards and any appropriate actions needed in the case of an unplanned release and activate the Emergency Operations Center (EOC).
6. Provide for event notification in accordance with Section 7.4.1.
7. Maintain access control at the site by keeping unauthorized personnel and vehicles away from the area. Security personnel may be used to assist in site control if control of the boundary is difficult, e.g. repeated incursions. In determining controlled-access areas, be sure to consider environmental factors such as wind velocity and direction.
8. Arrange for proper remediation of the incident after evaluation in accordance with Sections 7.4.2 and 7.4.3. Remain available to fire, police, and other authorities on scene and provide all required information. If round-the-clock work is anticipated, enlist the assistance of alternate BEDs to provide coverage. Make no comment to media unless authorized to do so. Refer media inquiries to the Media Relations office.
9. If remediation is performed by unit personnel, ensure use of proper protective equipment, proper remedial techniques (including ignition source control for flammable spills), and decontamination procedures by all involved personnel. Consult a PNNL industrial hygienist for assistance in determining necessary equipment or procedures.
10. If remediation is performed by outside agencies such as the Hanford Hazardous Materials Response Team or other remedial contractors, remain at the site to oversee activities and provide information.
11. Ensure proper containerization, packaging, and labeling of recovered spill materials and overpacked containers.

12. Ensure decontamination (or restocking) and restoration of emergency equipment used in the spill remediation prior to resumption of unit operations in compliance with Section 12.4.1.5.3 of this permit application.

13. Provide reports after the incident in accordance with Section 12.4.1.6.

7.4.4.5 Response to Fire or Explosion. (Signal: Gong -- 2 gongs/second) In the event of a fire or explosion, the discoverer will pull one of the manual fire alarms and call the Single Point Contact. Automatic initiation of a fire alarm (through the smoke detectors and sprinkler systems) is also possible. The personnel operating the facility are trained in the use of portable fire extinguishers. They will use their best judgment whether to extinguish a fire or evacuate. Under no circumstances will personnel remain in the facility to extinguish a fire if unusual hazards exist. The following actions will be taken in the event of a fire or explosion:

1. Upon actuation of the fire alarm, personnel will shut down equipment, secure wastes (especially RMW), and lock up classified documents (or carry them with them), ONLY if time permits.
2. The alarm automatically signals both the 300 Area Hanford Fire Department station and the 300 Area Hanford Patrol Headquarters. Both will respond immediately.
3. Personnel shall leave 305-B by the nearest safe exit, and move upwind, keeping the driveway clear.
4. The Single Point Contact shall be immediately notified, who shall in turn notify the BED (or alternate).
5. The BED will go directly to the scene.
6. The BED will obtain all necessary information pertaining to the incident.
7. The BED will contact the Single Point Contact and advise whether to notify the PNNL Occurrence Representative, depending on the severity of the event. Inform the Single Point Contact as to the extent of the emergency (including estimates of dangerous waste or RMW quantities released to the environment) and any actions necessary to protect nearby facilities.
8. Activation of the Emergency Operations Center (EOC) sets into motion the notification process for DOE, other Hanford contractors, and outside agencies.
9. The Hanford Patrol will set up roadblocks within the area to route traffic away from the emergency scene.
10. Emergency medical technicians will remove injured personnel to a safe location, apply first aid, and prepare for transport to the medical department (DOE/HEHF) or to hospitals. Medical personnel are on standby at the medical facility 24 hours/day.
11. The Hanford Fire Department will extinguish the fire.
12. All emergency equipment will be cleaned and restored for its intended use immediately after completion of cleanup procedures.

7.4.4.6 Unusual, Irritating, or Strong Odors. (Signal: None) If an unusual, irritating, or strong odor is detected, and the person detecting it has reason to believe that the odor may be the result of an uncontrolled release of a toxic or dangerous material, they shall:

- Immediately activate the building fire alarm system to evacuate the building, and
- Notify the Single Point Contact, the building manager, and cognizant line management.

In the event that the discoverer has knowledge of the source and scope of the release and believes that the release poses no immediate threat to others, the release shall immediately be reported to the building

manager and to the discoverer's manager. Measures shall be taken to contain the release and ventilate the area, if safe and advisable to do so.

In the event that an unusual odor is detected within the facility, and the source of the odor is unknown, the BED must consider whether the facility should be evacuated.

7.4.4.7 Criminal Activity. (Signal: None) In the event of sabotage, threatened action, or a bomb or suspicious object is discovered, unit personnel will clear the immediate area. The Single Point Contact will be notified immediately. Facility personnel shall take whatever steps are necessary to assure that suspicious objects are not moved, opened, or otherwise disturbed. If practicable and safe to do so, personnel may place warning signs, barricades, or guards to protect the object pending the arrival of qualified personnel.

7.4.4.8 "Off-Shift" Conditions. (Signal: None) If a staff member is working outside normal facility working hours, and the need to evacuate the facility occurs, the following procedure should be followed:

- Ensure that anyone else in the facility leaves through the nearest safe exit; provide assistance if necessary.
- Follow the facility evacuation procedure (Section 7.4.4.).
- In case of fire, activate the fire alarm, located at each building exit, and leave the building.
- Stay in a safe place nearby and inform the responding fire personnel of the nature and location of the emergency.
- Notify the Single Point Contact.

7.4.4.9 Power Failure. (Signal: None) In the event of power failure, all containers of waste will be checked for closure and, if the duration of the outage exceeds 30 minutes, will be returned to their storage cells if they have been removed for labpacking or bulking. Facility equipment will be shut down to allow orderly restoration of power.

In a power failure incident, the Building Manager and the BED are to be notified. The Building Manager is responsible to arrange for restoration of power service to the unit. The BED is responsible to evaluate whether the Contingency Plan should be implemented as described in Section 7.3, or whether an evacuation is advisable. If the Contingency Plan is not implemented immediately, site personnel may be required to monitor the unit for continuing release potential during extreme temperature periods. The BED will determine the need for, and extent of, any such monitoring, in consultation with an industrial hygienist if appropriate.

In the event of power loss to site equipment, which results in failure of the equipment, the Building Manager is to be contacted to arrange for repair of the affected equipment and/or provide restoration of power. The BED should be contacted in the event that any failure results in a release or potential release to the environment as described in Section 7.3.

7.4.4.10 Damaged Unacceptable Shipments. (Signal: None) When a damaged shipment of hazardous material or dangerous waste arrives at the unit, the shipment is unacceptable for receipt under the criteria of Section 2.8.3 of this permit application. The damaged shipment should not be moved. Unit personnel should instead perform the following steps:

1. If the release from damaged packagings is a "minor spill" under the criteria of Section 7.4.4.3:
    - Immediately notify the Single Point Contact to advise of the situation. The Single Point Contact will notify the BED, who will respond and assist in the evaluation of, and response to, the incident.

- Notify the generator of the damaged shipment, and obtain any chemical information necessary to assist the response.
- Unit personnel may proceed with remedial action, including overpacking of damaged containers, cleanup of spilled material, or other necessary actions to contain the spill.

2. If the release does not meet the criteria of a "minor spill" as noted above, or the extent of the spill cannot be immediately determined, the unit contingency plan will be implemented as described in Section 7.3.

7.4.5 Prevention of Recurrence or Spread of Fires, Explosions, or Releases [G-4e]

The BED is responsible for taking the steps necessary to ensure that a secondary release, fire, or explosion does not occur after the initial incident. Procedures that will be implemented may include:

- Inspection of containment for leaks, cracks, or other damage
- Inspection for toxic vapor generation
- Isolation of residual waste materials and debris
- Reactivation of adjacent operations in affected areas only after cleanup of residual waste materials is achieved.

7.4.6 Storage and Treatment of Released Material [G-4f]

Restart of operations after an emergency is conducted in accordance with established procedures for recovery from off-normal events. Treatment and/or storage and disposal of released material and contaminated debris is part of the recovery process leading to restart. These procedures call for cognizant PNNL line management and Laboratory Safety staff to determine the need for a recovery plan. A recovery plan is needed following an event when further risk could be introduced to personnel, a facility, or the environment through recovery action and/or to maximize the preservation of evidence. If a recovery plan is required, it must be approved by PNNL line management before restart. Restart of operations must be performed in accordance with the approved plan.

For emergencies not involving activation of the EOC, the BED is responsible for ensuring that conditions are restored to normal before operations are resumed. If the EOC was activated and the emergency phase is complete, a special recovery organization may be appointed at the discretion of the BED to restore conditions to normal. The makeup of this organization will be dependent upon the extent of the damage and its effects. The recovery organization will be appointed by the Site Emergency Director.

Immediately after an emergency, the BED or the recovery organization will make arrangements for the cleanup phase. Procedures for treatment, storage, and/or disposal of released material and contaminated debris are implemented at this time.

Released material and contaminated debris will be managed in the same manner as wastes received from outside the unit (see Section 4.3 for procedures). All waste so generated will be containerized in drums or other appropriate containers and stored in an appropriate storage area pending analysis and determination of final treatment/disposal requirements. Environmental Management Services will be contacted for support and guidance during this phase of operations.

Cleanup actions will be taken by unit operations personnel or other personnel meeting the training requirements of Chapter 8 of the unit Part B permit application. Actions to be taken may include, but are not limited to, any of the following:

- Neutralization of corrosive spills
- Chemical treatment of reactive materials to reduce hazard

- Overpacking or transfer of contents from leaking containers
- Using absorbents to contain and/or absorb leaking liquids for containerization and disposal
- Decontamination of solid surfaces impacted by released material, e.g. intact containers, facility equipment, floors, containment systems, etc.
- Disposal of contaminated porous materials which cannot be decontaminated, and any contaminated soil
- Containerization and sampling of recovered materials for classification and determination of proper disposal technique
- Follow up sampling of decontaminated surfaces to determine adequacy of cleanup techniques as appropriate.

Wastes from cleanup activities will be analyzed and stored in the same manner as are wastes received from outside the unit, in the manner prescribed in Chapter 4 of the Part B permit application for 305-B. A field check for compatibility prior to first storage, if necessary, will be performed as described in A Method for Determining the Compatibility of Hazardous Waste (EPA 1980). Incompatible wastes will not be placed in the same container. Containers of waste will be placed in storage areas appropriate for their compatibility class.

If it is determined that incompatibility of wastes was a factor in the incident, the BED or the recovery organization will ensure that the cause is corrected. Corrective examples would be modification of an incompatibility chart, or increased scrutiny of wastes from a generating unit (in accordance with Section 3.2 of the Part B permit application) when incorrectly designated wastes caused or contributed to an incident.

7.4.7 Post-Emergency Equipment Maintenance [G-4h]

All equipment used during an incident will be decontaminated (if practicable) or disposed of as spill debris. Decontaminated equipment will be checked for proper operation prior to storage for subsequent use. Consumables and disposed materials will be restocked in the quantities shown in the inventories of Section 7.5. Fire extinguishers will be recharged or replaced.

The BED is responsible to ensure that all equipment is cleaned and fit for its intended use prior to the resumption of operations. Depleted stocks of neutralizing and absorbing materials will be replenished, SCBAs cleaned and refilled, protective clothing cleaned or disposed and restocked, etc. Notification of state and local authorities will be made through DOE-RL of completion of cleanup, decontamination and emergency equipment re-supply activities pursuant to WAC 173-303-360(2)(j). Upon notification and approval of PNNL line management, normal facility operations may be resumed.

7.4.8 Response to Container Spills or Leaks [G-4i]

In addition to the foregoing contingency plan provisions, the following specific actions may be taken for leaks or spills from containers at the unit:

- Container leaks will be stopped as soon as possible through tightening closures, tipping the container to stop the leak, use of plugging or patching materials, or overpacking. Appropriate protective equipment will be used.
- If it is inadvisable to approach the container, build a containment of absorbent materials and restrict access pending notification of the BED and implementation of the contingency plan.
- Contents of leaking containers may be transferred to appropriate non-leaking containers. Transfer procedures for fire safety will be followed for ignitable or reactive wastes (e.g., use of non-sparking

tools, bonding and grounding of containers, isolation of ignition sources, and use of explosion-proof electrical equipment).

- Overpacked containers will be marked and labeled in the same manner as the contents. All containers of spill debris, recovered product, etc. will be managed in the same manner as waste containers received from outside the unit. Overpacks in use at the facility will be marked with information pertaining to their contents, and noting whether the container inside the overpack, is leaking or is in good condition.

7.4.9 Response to Tank Spills or Leaks [G-4j]

This section is not applicable to 305-B because wastes are not stored in tanks.

7.4.10 Surface Impoundment Spills and Leakage [G-4k]

This section is not applicable to 305-B because wastes are not placed in surface impoundments.

7.4.11 Waste Pile Spills and Leakage [G-4l]

This section is not applicable to 305-B because wastes are not stored in waste piles.

7.4.12 Incineration Spills and Leakage [G-4m]

This section is not applicable to 305-B because wastes are not incinerated.

7.4.13 Landfill Leakage [G-4n]

This section is not applicable to 305-B because wastes are not placed in landfills.

7.4.14 Land Treatment Facility Spills and Leakage [G-4o]

This section is not applicable to 305-B because wastes are not treated in land treatment units.

7.5 EMERGENCY EQUIPMENT [G-5]

The emergency equipment available for use during an emergency at the 305-B Storage Unit and at adjacent portions of the Hanford 300 Area are discussed in the following sections. The location of emergency equipment in the 305-B unit is shown in Figure 7-1.

7.5.1 Communication Equipment

The 305-B Storage Unit has an alarm system that is monitored by the Hanford Fire Department. A manual fire alarm pull box is located near each exit door. Unit operations personnel may also use telephones, the building PA system, or portable radios located throughout the unit to summon assistance. Further description of communication equipment is located in Sections 6.3.1.1 and 6.3.1.2 of Chapter 6 of the Part B permit application.

7.5.2 Fire Control Equipment

The 305-B Storage Unit is constructed of noncombustible materials and equipped with an automatic fire-suppression (sprinkler) system. A portable fire extinguisher is located in each working area in compliance with NFPA safety codes. Each Class ABC extinguisher is capable of suppressing fires involving ordinary combustible materials, flammable liquids, oils, paints, flammable gases, and fires involving electrical equipment. The Class D extinguisher is capable of extinguishing Class D (reactive metals) fires. The Halon extinguisher is capable of extinguishing Class ABC fires where Halon would be

more appropriate, e.g. fires involving large electrical equipment. All extinguishers comply with the National Fire Code standards for portable extinguishers and are inspected monthly by the building manager. The inspections are recorded on tags attached to each extinguisher.

7.5.3 Personal Protective Equipment

The unit has a safety shower and eyewash unit at each end of the high bay. Drainage from these units flows into the containment trenches. In addition to these units, a portable eyewash unit is maintained at the protective equipment storage area just outside the high bay, adjacent to the office area. These eyewash/shower units are inspected for clear and unobstructed accesses weekly in accordance with Section 6.2 of the Part B permit application.

Protective clothing and respiratory protective equipment are maintained at the facility for use during both routine and emergency operations. This protective equipment includes at a minimum:

- 6 sets of chemically resistant suits, aprons, boots, and gloves
- 20 protective glasses
- 5 pair chemical goggles
- 4 face shields
- 4 full face respirators
- Respirator cartridges (variety)
- 3 self-contained breathing apparatus (30 minute type).

This protective equipment is stored in cabinets located outside of the high bay east entrance. Personnel assigned to 305-B are available to assist other trained personnel (e.g., firefighters) in emergency situations or possible Immediately Dangerous to Life or Health (IDLH) spill cleanup situations.

7.5.4 Spill Control and Containment Supplies

Supplies of absorbent pillows are located in the high bay operating area near the east entrance. These pillows absorb organic or inorganic materials and have a rated absorption capacity of approximately one liter of waste each. They may be used for barriers to contain liquid spills as well as for absorbent purposes. The work area also has an ample supply of diatomaceous earth or vermiculite for absorption of liquid waste spills. Neutralizing absorbent is available for response to acid or caustic spills. A supply of empty drums (DOT UN1A1 closed head and DOT UN1A2 open head) and salvage drums (overpacks) is maintained in the high bay area along with brooms, shovels, and miscellaneous spill response supplies.

Figure 7-1. 305-B Storage Unit Emergency Equipment Locations

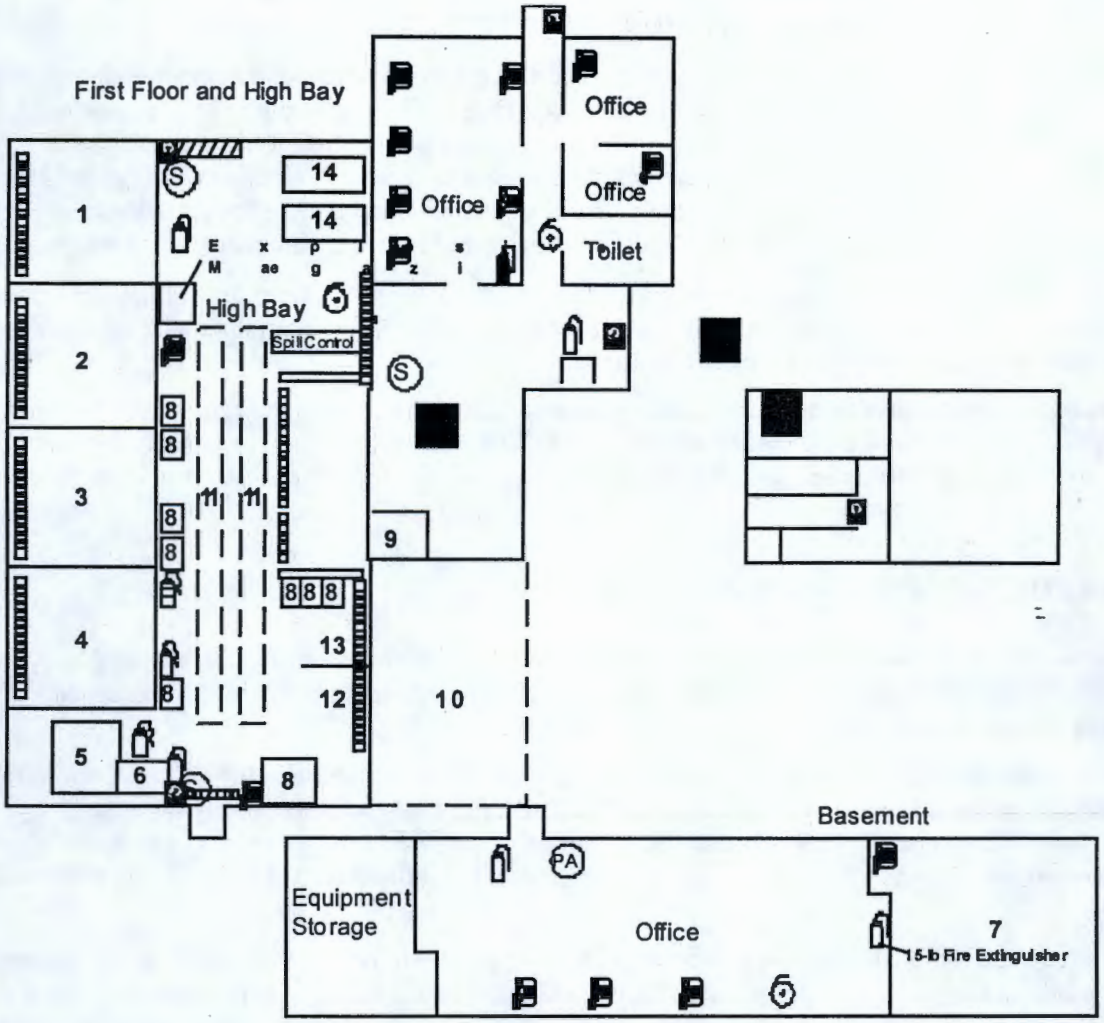

Legend

1. Acids, Oxidizers
2. Poisons, Class 9's
3. Alkalines, WSDW, Organic Peroxides
4. Organics and Compressed Aerosols
5. Flammable Liquid Bulking Module and compressed gases
6. Asbestos Cabinet
7. RMW Storage Cell
8. Flammable Storage
9. Small Quantity Flammable RMW
10. Outdoor Non-Regulated Drum Storage
11. WSDW/ORM/Non-Reg Drums
12. Oxidizer Drums
13. Acid Drums
14. Alkaline Drums

Safety Shower/Eyewash
Phone
Fire Alarm Bell
Fire Alarm Pull Box
14-lb Halon Fire Extinguisher
10-lb ABC Fire Extinguisher
15-lb Class D Fire Extinguisher
Removable Access to Basement
Emergency Equipment Cabinet
Collection Sumps

1

7.5.5 Hanford Site Emergency Equipment

The Hanford Site has fire and patrol personnel trained and equipped to respond in emergency situations. These personnel are employees of the site operating contractor. The Hanford Fire Department's Hazardous Material Response Team is trained for mobilization and control of hazardous material emergencies. The Hanford Fire Department will take control of the incident scene until the incident is under control and personnel rescue is complete. A list of available equipment for hazardous materials responses available through the Hazardous Material Response Team is given in Appendix 6A.

The Hanford Patrol provides support to the Fire Department during an incident, including such activities as activation of area crash alarm telephone systems or area sirens (for evacuation or take cover), access control, traffic control, and emergency notifications.

If an emergency threatens other facilities and/or there is a danger of release of hazardous materials to the environment, the 300 Area EOC will be activated. The EOC will provide any assistance requested by the BED, coordinate protective response actions and notifications, and furnish any necessary technical assistance.

7.6 COORDINATION AGREEMENTS [G-6]

This section refers to a number of coordination agreements "Memorandum of Understanding" and (MOU) established by and through DOE-RL to assure proper response resources availability for incidents involving the 305-B unit.

An MOU among the four major site contractors (PHMC, PNNL, BHI and HEHF) defines the interfaces and notifications required during an emergency. DOE-RL has overall responsibility for emergency preparedness. Per the MOU, PHMC has responsibility for Site-wide emergency preparedness while each contractor retains responsibility for emergency preparedness at individual units they co-operate with DOE-RL.

MOUs have been established with a number of offsite authorities to reduce the impact to human health and the environment in the event that an incident has off-site public health implications, or if an on-site emergency warrants off-site assistance. These MOUs are generally activated through the emergency notification of DOE-RL as stated in Section 7.4.1 and in Appendix 7A.

7.6.1 Local, State, and Federal Authorities

Various MOUs have been established between DOE-RL and Benton, Franklin, and Grant Counties and the states of Washington and Oregon. These MOUs describe the cooperative agreements between these agencies for any onsite emergency that warrants off-site assistance, and they describe the planning for, communication of, and response to emergencies at the Hanford Site that might have off-site consequences.

7.6.2 Hanford Fire Department Mutual Aid

The Hanford Fire Department provides fire department services for the Hanford Site. Mutual aid agreements have been established with Richland, Kennewick, and Pasco fire departments; with Benton County Fire Districts 1,2, and 4; Franklin County Fire District 3; and Walla Walla Fire District 5 for support. In events where fire and/or toxic smoke threatens more than one facility, the 300 Area EOC is activated.

7.6.3 Medical and First Aid

Professional medical help is provided by DOE-RL onsite through HEHF. Doctors and/or nurses are available for emergency assistance Monday-Friday, 0730-1600. These medical personnel are trained in

procedures to assist personnel contaminated with hazardous and/or radioactive material. Emergency call lists are maintained to provide professional medical consultation at all times. For all other times the 300 Area fire station can be contacted for emergency or ambulance service by calling 375-2400.

Referral to offsite hospital facilities is made by the HEHF physician providing emergency assistance by phone or in person. The primary hospital utilized in emergencies is Kadlec Hospital, Richland. Kennewick General Hospital, Kennewick, and Our Lady of Lourdes Hospital, Pasco, are backup facilities. MOUs between these hospitals and DOE-RL dated February 24, 1989 are in place and incorporated in the DOE-RL Hanford Emergency Response Plan.

7.6.4 Ambulance Service

Ambulance service is provided by the Hanford Fire Department, which uses qualified emergency medical technicians as attendants. This service is available to the 305-B unit from the 300 Area fire station on a 24-hour, 7-day basis. Additional ambulance service is available from other site fire stations and from other local fire departments through the mutual aid agreements noted in Section 7.6.2. An MOU has also been specifically established between DOE-RL and the City of Richland to provide backup ambulance services.

7.6.5 Unified Dose Assessment Center

The Unified Dose Assessment Center (UDAC) is the technical extension of the DOE-RL SMT, providing services to the EOC. The primary mission of the UDAC is to provide recommendations for protective actions, dose calculations and projections, and consultation in the area of industrial hygiene for hazardous materials, biology, environmental monitoring, and meteorology to support the EOC. Industrial hygiene and biological consultants at the UDAC advise and assist in determining proper response procedures for spills or releases of toxic, flammable, carcinogenic, and pathogenic materials. UDAC staff is responsible to provide a central unified assessment of the dispersion and impact of environmental releases from the Hanford Site. In communication with the ECC, UDAC coordinates the assessment of impacts and assists in determination of actual and potential release scenarios.

7.6.6 Hanford Patrol Mutual Aid

The Hanford Patrol serves as the security and enforcement agency for the Hanford Site. In the event of an emergency, the Hanford Patrol provides services such as activating the crash alarm systems or area sirens, coordinating the movement of emergency responders through security gates, assisting evacuation, establishing barricades, and making necessary notifications through the Single Point Contact. MOUs have also been established with the Tri-Cities police departments to provide additional backup capabilities if required.

7.6.7 River Evacuation

An MOU among DOE-RL, the Washington Public Power Supply System (WPPSS), Benton and Franklin Counties, and the Thirteenth Coast Guard District exists to ensure safety on the Columbia River during an emergency at the Hanford Site and to coordinate response activities for a river evacuation.

EMERGENCY SIGNALS

Signal	Meaning	Response
Gong (2 gongs/sec)	Fire	Evacuate building. Move upwind. Keep clear of emergency vehicles.
Siren (steady blast)	Area Evacuation	Proceed promptly to north parking lot accountability area. Follow instructions.
Wavering Siren	Take Cover	Close all exterior doors, turn off all intake ventilation and notify EMSD of your whereabouts. Request call back for status and monitor portable radios.
Howler (Aa-oo-gah)	Criticality	Follow "take cover" instructions above. (No criticality will take place in 305-B since fissile materials are not accepted for storage.)
To hear these signals and a description of actions to take, call 373-2345.		

7.6.8 Meteorological Information

A MOA is in place between the DOE-RL and the National Weather Service to define mutual responsibilities for providing meteorological information in an emergency situation. Additional meteorological information can be obtained from the Hanford weather station.

7.6.9 Washington Public Power Supply System

An MOA has been established between DOE-RL and WPPSS for providing mutual assistance as needed and available in the use of facilities and equipment for personnel decontamination, first aid, evacuation and re-assembly areas, respiratory protective equipment, protective clothing, radiological survey equipment, resources for river evacuation, and radiological assistance response.

7.7 EVACUATION PLAN [G-7]

The 305-B unit has an evacuation plan, which includes emergency signal identification and staging area location. In the event an evacuation is required, 305-B unit personnel depart by one of the exit doors noted in Figure 7.2 and proceed through the north gate. They are to assemble in the north parking lot Figure 7.3, Lane 2 accountability area for accounting. If the north gate is blocked by the emergency, personnel may escape through the Apple Street (west) gate opening to Stevens Drive or the south gate.

Figure 7-1. 305-B Evacuation Exits

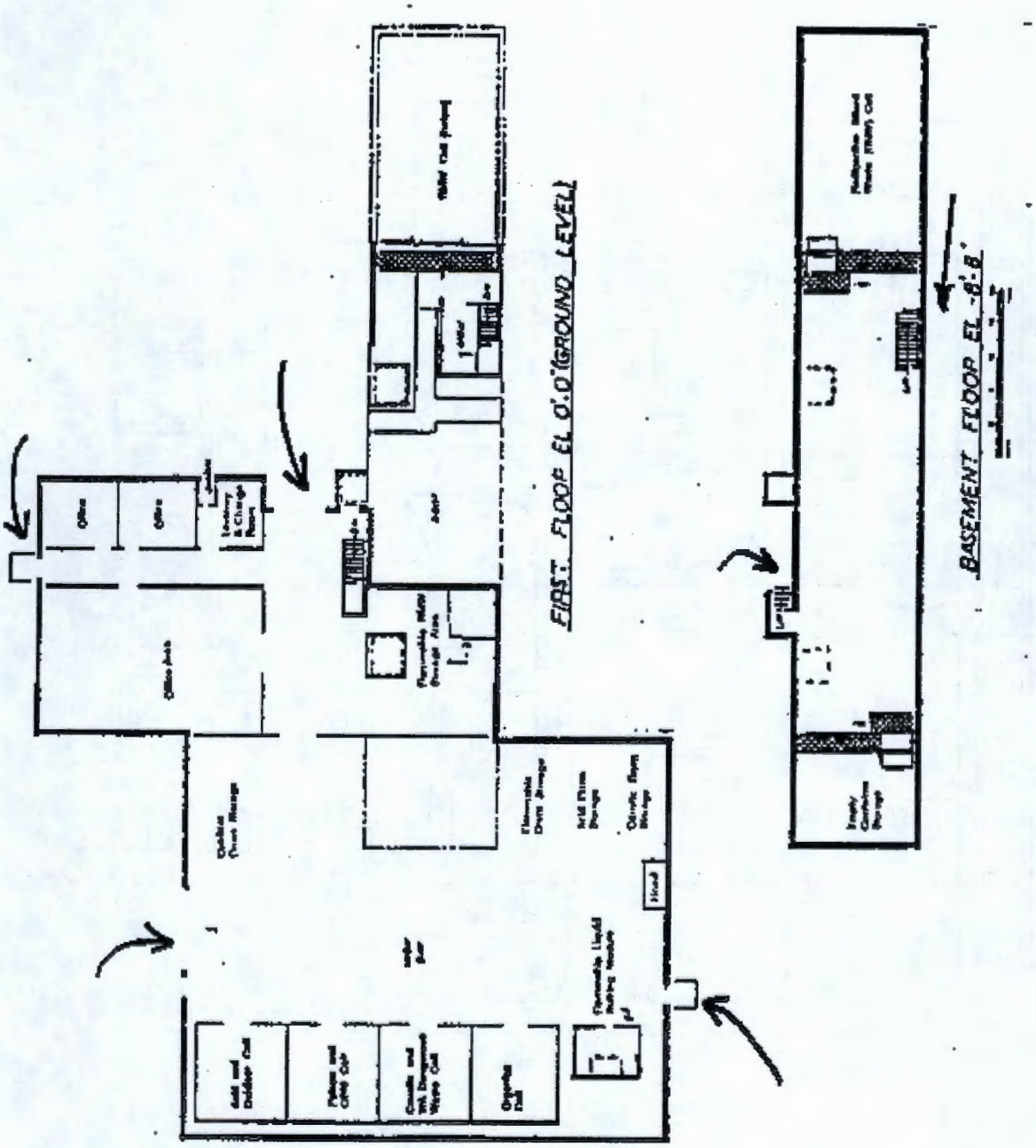

Figure 7-2. 305-B Evacuation Route

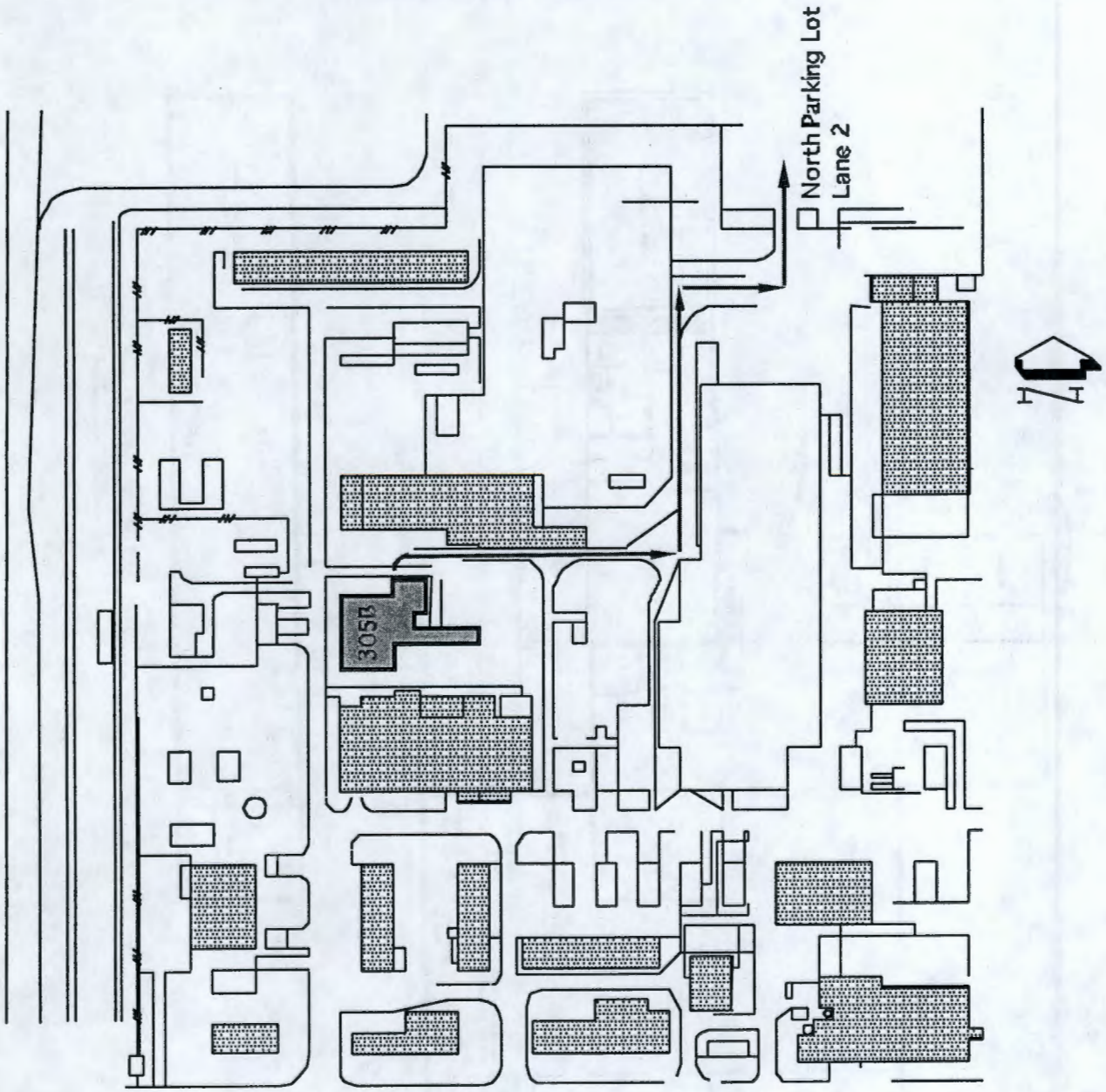

7.8 REQUIRED REPORTS [G-8]

Three types of written post-incident reports, summarized below are required for incidents at the 305-B unit.

7.8.1 Report to Ecology/EPA

Within 15 days of the incident, a written report will be submitted to Ecology concerning the incident. The report must include:

- Name, address, and telephone number of DOE-RL contact;
- Name, address, and telephone number of 305-B unit;
- Date, time, and type of incident (e.g. fire, explosion);
- Name and quantity of material(s) involved;
- The extent of any injuries;
- Assessment of any actual or potential hazards to human health or the environment caused by the incident;
- Estimated quantity and disposition of recovered material that resulted from the incident;
- Cause of the incident; and
- Description of corrective action taken to prevent recurrence of the incident.

7.8.2 DOE Occurrence Reporting

Under DOE Order 232.1, an occurrence report is required for incidents occurring at the 305-B unit involving hazardous materials release, fire, etc. Specific details of this reporting system are found in the Order. To summarize, the BED is responsible to file the following occurrence reports with DOE-RL under the Order:

- Within 24 hours of discovery, file a Notification Report.
- File an updated Occurrence Report whenever significant new information relating to the incident becomes available.
- File a final Occurrence Report when cause of the incident has been analyzed, root cause and contributing causes determined, corrective actions determined and scheduled, and "lessons learned" identified.

7.8.3 Off-Normal Event Reporting

Under off-normal event reporting procedures, occurrences shall be promptly investigated, reported, and analyzed to ensure that effective corrective actions are taken in compliance with contractual, statutory, and corporate requirements. All incidents are recorded in the building manager's logbook, and the logbook is audited to assure that incidents were reported and handled properly. In the DOE reporting system, four levels of incidents are described in descending order of severity: emergency, unusual occurrence, off-normal occurrences, and logbook entry only.

An "off-normal event" is a significant deviation from normal operation that requires categorization and reporting as noted above. PNNL management is required to evaluate an event to determine the depth of investigation and level of reporting required.

Reporting of emergencies, unusual occurrences, and off-normal occurrences takes place as described under Section 7.8.2.

The BED is responsible for investigating each event in his/her area(s) of responsibility and submitting the appropriate report.

7.9 CONTINGENCY PLAN LOCATION

Copies of the 305-B contingency plan are maintained at the following locations:

- The 305-B Storage Unit
- Hanford Fire Department (300 Area Fire Station)
- The DOE-RL/EOC, Federal Building, Richland
- All local police and fire departments, hospitals, and state and local response teams that may be called upon to provide emergency services.

Building Emergency Organization

1) Building Emergency Director

The BED or alternate have the responsibility for the welfare and safety of the building personnel and for the directing efforts to control and termination the event if the event occurs in his or her building.

		Work	Home
Building Emergency Director	GT Thornton	376-7688	967-2456
First Alternate	GM Bartel-Bailey	376-4189	546-6380(P)
Second Alternate	LD Upton	376-9726	588-1985

2) Zone Warden

Zone Wardens are responsible for determining if all personnel have left their zone, reporting the occupancy status to the staging area supervisor, and determining if aid and/ or rescue is required. The zone Warden is to assist anyone requiring help in evacuating the building.

		Work	Home
Primary	GM Bartel-Bailey	376-4189	546-6380(P)
Secondary	LD Upton	376-9726	588-1985

3) Staging Area Supervisor

The Staging Area Supervisor shall direct all activities at the Building Staging Area and is responsible for notifying the Building Emergency Director if all personnel are accounted for or if help is needed.

		Work	Home
Staging Area Supervisor	GM Bartel-Bailey	376-4189	546-6380(P)
First Alternate	LD Upton	376-9726	588-1985

Emergency Telephone Numbers

PNNL Single-point Contact		375-2400
If 375-2400 is inoperative, call:	Hanford Fire	911
	Hanford Ambulance	911
	Hanford Patrol	911
If calling from a cellular phone	Hanford Patrol	373-3800
Building Emergency Director	GT Thornton	376-7688
Alternate	GM Bartel-Bailey	376-4189
PNNL Duty Officer(s)	(Safety-Security)	375-2154
Kadlec Hospital		946-4611
Off-Normal Events		375-2400

8.0 CONTENTS

8.0 CONTENTS **8-I**

8.0 PERSONNEL TRAINING [H] **8-1**

8.1 OUTLINE OF TRAINING PROGRAM [H-1] 8-1
8.1.1 Job Titles and Job Descriptions [H-1a] *8-1*
8.1.2 Training Content, Frequency, and Techniques [H-1b] *8-3*
8.1.3 Training Coordinator [H-1c] *8-3*
8.1.4 Relevance of Training to Job Position [H-1d] *8-4*
8.1.5 Training for Emergency Response [H-1e] *8-5*
8.2 IMPLEMENTATION OF TRAINING PROGRAM [H-2] 8-6

FIGURE

FIGURE 8-1. 305-B TRAINING REQUIREMENTS 8-2

This page intentionally left blank.

8.0 PERSONNEL TRAINING [H]

The information contained in this chapter outlines the Personnel Training Program for PNNL personnel associated with the operation of the 305-B Storage Unit. The program is instituted in accordance with WAC 173-303-330. A copy of this training plan is kept at 305-B.

8.1 OUTLINE OF TRAINING PROGRAM [H-1]

The training program for personnel at 305-B is instituted to meet the requirements of WAC 173-303-330. PNNL combines classroom instruction and on-the-job training to teach all personnel to perform their duties (specific to each job classification) in a way that ensures the facility's compliance with WAC 173-303, teaches personnel dangerous waste management procedures (including contingency plan implementation) relevant to the positions in which they are employed, and ensures that personnel are able to respond effectively to emergencies. The training requirements for 305-B operating personnel are depicted graphically in Figure 8.1. PNNL personnel not assigned to the 305-B facility may, on an occasional basis, assist with specific operations at this TSD unit. Proper training for the job will be given to the personnel in these situations before the beginning of any unsupervised work. This training shall be documented by the training coordinator and kept on file for future reference.

8.1.1 Job Titles and Job Descriptions [H-1a]

The Unit Operating Supervisor is responsible for the daily operation of 305-B in compliance with regulations administered under RCRA, the State of Washington Dangerous Waste Regulations (WAC 173-303), and PNNL waste operating procedures.

The Unit Operating Supervisor is ultimately responsible for assessing 305-B compliance, conducting inspections and overseeing any corrective actions which may result from them, ensuring waste handling and storing procedures are followed, and serving as BED to implement proper emergency procedures when necessary. In addition to the responsibilities mentioned above, it is the role of the Unit Operating Supervisor to direct new employees so that successful completion of introductory and on-the-job training will be accomplished in the first six months of employment.

The RMW Waste Management staff-is responsible for the mixed waste operation of 305-B. The staff members must review all mixed waste disposal requests and ensure their accuracy and reliability. In addition, the RMW Waste Management staff-will dispatch a pickup team and oversee mixed waste pickup and transportation to the 305-B Storage Unit. When adequate volumes of mixed waste have accumulated to warrant disposal of the waste, the RMW Waste Management staff-is responsible for readying the waste for shipment. These duties include packaging, labeling, manifesting, and recordkeeping.

The Waste Management Engineers are responsible for evaluating unit compliance, managing the PNNL PCB waste stream, managing the waste designation database, and overseeing waste designations. Waste Management Engineers also perform waste management operations such as pickup and lab packing of small containers. They also oversee offsite shipping of wastes and ensure compliance with DOT regulations.

TRAINING COURSE NAME	STAFF POSITION[1]			
	OS	E	TS	C
Building Emergency/Contingency Plan	A[2]	A	A	A
General Radiation Safety	B	B	B	N
Radiation Safety for Females[3]	I	I	I	I
Respiratory Protection	N	A	A	N
TSD Operator (24 hour w/8-hour refresher)	I/A	I/A	I/A	I/A
SCBA Training	N	A	A	N
Fire Extinguisher Use	A	A	A	A
Worker Right-To-Know	I	I	I	I
Vehicle Accident Prevention	T	T	T	T
Crane, Hoist and Rigging Safety	N	N	T	N
Safe Forklift Operation	N	N	T	N
Hazardous Waste Shipment Certification	T	T	T	N
Radioactive Mixed Waste Shipment Certification	T[4]	T[4]	T[4]	N
Annual review of facility operating procedures	A	A	A	A
Advanced Hazardous Waste Training	A	A	A	N
Hazardous Waste Operations Supervisor	I	N	N	N
Waste Designation Training	I	I[5]	I[5]	N

[1]Staff Position Key: OS Unit Operations Supervisor
E Waste Management Engineers
TS Waste Management Technicians and Scientist/Engineering Associates
C Waste Management Clerks

[2]Requirements Key: A Annually; B Biennially; T Triennially; I Initially upon assignment to the unit; N Not Required.

[3]Required for female staff only. This information is given in the various radiation safety classes and is not a separate stand-alone class.

[4] Required for Radioactive Mixed Waste Management staff (TS or E) only. Successful completion of this course meets the requirements of the Hazardous Waste Shipment Certification course

[5]Required for any TS that has the assigned duty of making waste designations.

1 **Figure 8-1. 305-B Training Requirements**

Waste Management Technical Specialists, Technicians, and clerks are responsible for the physical operations at 305-B. The persons in these positions are responsible for packaging, labeling, and preparing wastes for shipment to disposal facilities and will assist in any sampling activities and/or waste pickups. One or more of these staff members will also serve as alternate BEDs and zone wardens for 305-B in the event of an off-normal event or an emergency. As zone warden, the primary responsibility is to account for the safe evacuation of plant personnel and report this to the BED. They are also responsible for performing minor maintenance and upkeep of the 305-B building.

Waste Management Clerks are responsible for recordkeeping and database maintenance at the 305-B Storage Unit. It is the role of the Waste Management Clerk to enter data and update the databases as required. Verification of waste inventories is also the clerk's responsibility; other roles include reporting, preparation of labels, manifests and associated paperwork, and unit upkeep.

The operations supervisor and all engineer positions require, at a minimum, a college science or engineering degree. The technical specialist positions require, at a minimum, a high school diploma or equivalent, with one year of college science/chemistry or an equivalent year of job specific experience. The technician positions require, at a minimum, a high school diploma or equivalent, with college level science/chemistry or equivalent job experience. The clerk position requires, at a minimum, a high school diploma or equivalent. For all positions, requisite skills, and qualifications required are: (1) previous experience performing similar tasks, as detailed in the job description, and/or (2) specific specialized course work intended to train and qualify the individual for tasks similar or equal to those detailed in the specific job description.

A current list of the personnel filling the above-mentioned positions can be found in Appendix 8A. The personnel list will be updated as the names of responsible personnel change.

8.1.2 Training Content, Frequency, and Techniques [H-1b]

A number of training courses are required of 305-B personnel on periodic basis. A brief description of required courses is given in this chapter (Figure 8-1). Equivalent training may be taken in place of the training identified in Figure 8-1 with approval from the 305-B Unit operating Supervisor or the Environmental Management Services Department Manager. Documentation of the training substitution will be placed in the operating record (within 7 days after the training was received), accompanied by a narrative explanation, and the date of the training. The documentation shall be made available to Ecology or EPA during inspections for assessment. If Ecology or EPA determines that the training substitution was not equivalent to the original, the original training will be taken or an acceptable substitution will be found.

New employees at 305-B must successfully complete the training program within 6 months after their employment at or assignment to the unit. At a minimum, the training familiarizes personnel with emergency equipment and procedures, unit operations, and Occupational Safety and Health Administration (OSHA) regulations.

8.1.3 Training Coordinator [H-1c]

Training at PNNL is provided by a number of specialists in their fields, including a Training Coordinator from the waste management organization who is responsible for coordinating dangerous waste training. The position of Training Coordinator is filled by facility staff members-having "hands-on" experience .

with handling chemical wastes. PNNL also has a unit, which tracks and monitors training for PNNL employees. This coordination includes a system for "flagging" affected employees when additional training and/or follow-up is warranted.

8.1.4 Relevance of Training to Job Position [H-1d]

Titles and job descriptions of personnel involved in operating 305-B are set forth in Section 8.1.1. All training is relevant to the positions in which the unit personnel are employed; for normal operating conditions the training includes:

- Advanced Hazardous Waste Management — Annual: This training covers internal PNNL hazardous and mixed waste procedures and issues, and regulatory requirements applicable to PNNL operations for 90-day areas and TSD operations.

- Worker Right-to-Know — Initial: This course familiarizes the employee with their rights under the right-to-know statutes. Information on material safety data sheets and their availability and on standard industrial hygiene terms is also covered.

- Vehicle Accident Prevention — Initial and triennial refresher: This course is intended to familiarize employees with safe driving rules and with the requirements for operation of government-owned and PNNL-owned vehicles.

- General Radiation Safety — Biennial: This course gives staff members information on the basic characteristics of radiation, natural and manmade sources, biological effects and risks of radiation exposure, ALARA, contamination control, and warnings and alarms. This course requirement can be met by taking any of the radiation safety courses such as Radiation Worker II, Radiation Worker I or General Employee Radiation Training.

- NCRP Report 39 — Initial: For female radiation workers only. The briefing informs the female radiation worker of the potential hazards of radiation to women of reproductive age. This information is provided in the various radiation safety classes including Radiation Worker I/II and General Employee Radiation Training and is not a separate stand-alone class.

- 305-B Safe Operating Procedures — Annual or whenever procedure content is revised, whichever is more frequent: reading and studying the written procedures fulfills this requirement.

- Hazardous Waste Shipment Certification — Triennial: This course provides training to those who supervise and prepare hazardous waste shipments and who certify that these shipments have been properly prepared in compliance with applicable laws and regulations. This training ensures that these persons understand their responsibilities and liabilities in the shipment of hazardous waste and that they have a basic understanding of which regulations are applicable and how they must achieve compliance.

- Radioactive Mixed Waste Shipment Certification — Triennial: This training ensures that these persons understand their responsibilities in the shipment of hazardous waste, and radioactive material/waste and that staff understand which regulations are applicable and how they must achieve compliance.

- Crane Hoist and Rigging Safety — Triennial: This course provides instruction in the safe operation of cranes and in proper rigging techniques.

- Safe Forklift Operation — Triennial: This course provides instruction in the safe operation of forklifts.

- Hazardous Waste Operations Supervisor — This training course gives hazardous waste operation instruction from a manager's standpoint.

- Waste Designation Training — This course gives instruction on proper designation of waste in accordance with WAC 173-303.

Training is tracked and documented by PNNL and by the unit training coordinator. Training records and class documentation are held on file in the waste management operations office in 305-B as part of the Operating Record. The waste organization manager is responsible for ensuring the necessary training is provided to the 305-B staff.

8.1.5 Training for Emergency Response [H-1e]

Training is adequate to ensure that personnel are able to respond effectively to emergencies and are familiar with emergency procedures, emergency equipment, and emergency systems. Emergency response training includes, but is not limited to:

- Using, inspecting, repairing, and replacing unit emergency and monitoring equipment

- Activating and responding to communications and alarm systems

- Response to fires and explosions

- Shutdown of operations.

Procedures for Using, Inspecting, Repairing, and Replacing Unit Emergency and Monitoring Equipment. Personnel operating 305-B are adequately trained to ensure prompt and effective response to emergency situations that may arise during operation of the unit. The following required safety courses outline procedures for using, inspecting, repairing, and replacing unit emergency and monitoring equipment.

- Building Emergency Preparedness (contingency plan): conducted annually or when changes are made, whichever is more frequent, to familiarize the employee with the written contingency plan and specific responsibilities of emergency procedures.

- Respiratory Protection (SAF-RP-001): conducted annually, the course familiarizes the operating staff with the proper use of air purifying respirators and their limitations. It also makes the staff aware of potential respiratory hazards, how to recognize them, and what actions to take.

- Treatment, Storage, or Disposal (TSD) Facility Operator Safety (SAF-WM-007): consists of 24-hour initial training and an 8-hour annual refresher. This course provides extensive instruction on the use of field survey instruments such as combustible gas indicators, oxygen meters, detector tube systems, photo and flame ionization instruments, organic vapor analyzer

(OVA) meters, and atmospheric sampling instruments. Other topics covered include heat-induced illnesses, OSHA's Emergency Response Standards, lists of personal protective equipment, hazardous materials classification systems, confined space work practices, liquid storage tanks, contamination control, toxicology, medical monitoring, and many others.

- SCBA: conducted annually, this course instructs the employee of the advantages and limitations of the SCBA equipment. Key items covered in the course content of this will include equipment inspection, modes of operation, donning procedures, recognition and response to malfunctions, maintenance and repair, and practical demonstrations.

- Fire Extinguisher Use: conducted annually, this 30-minute course consists of a videocassette, lecture, and reading materials. Its intent is to familiarize all personnel with proper discharging, inspecting, and maintenance procedures for fire extinguishers to be used during an emergency.

Key Parameters for Automatic Waste Feed Cut-Off Systems. This section is not applicable because there are no automatic waste feed systems at 305-B.

Communications or Alarm Systems. Personnel operating 305-B are properly trained in both handling communication devices and alarm systems and recognizing alarm sirens as to their meaning. A Hand-Held Radio Operator training course (outlined above) is required to be a part of all 305-B employee training. In addition, the Contingency Plan, also required reading for all the operating staff at 305-B, details communication and alarm systems, as well as proper response to each system during an emergency.

Response to Fires. Personnel at 305-B are adequately trained to respond to fires at the unit. All staff is trained annually in implementation of the contingency plan, which outlines each person's immediate and sequential actions in case of a fire emergency. In addition, all staff receives training for proper handling, maintenance, and discharge of on-site fire extinguishers, and proper activation of alarm and fire suppressant systems.

Response to Groundwater Contamination Incidents. This section is not applicable because groundwater monitoring is not required at 305-B.

Shutdown of Operations. Procedures for shutdown of operations of 305-B because of an emergency situation are outlined in the contingency plan. As mentioned previously, all staff is trained annually in implementation of the contingency plan. The person responsible for the decision to shut down is the BED or alternate.

8.2 IMPLEMENTATION OF TRAINING PROGRAM [H-2]

The training program is currently being implemented. All employees will receive training within six months of their date of hire or their transfer to a new position at the unit. Personnel will not work in unsupervised positions until they successfully complete the training course. Records of each individual's formal training are maintained at the 305-B unit; backup files are kept at the office of the Laboratory Training Coordinator. Training records of current employees will be kept until closure of the unit. Records of former employees are kept for at least three years from the date the employee last worked at the unit.

The training outline is on file in the Laboratory Training Coordination office and at 305-B and is available for review by all waste handling and management personnel, emergency response personnel, and all regulatory agencies. Provisions are made for updating and reviewing courses, as necessary, to ensure compliance with WAC 173-303.

This page was intentionally left blank.