START

0035547

46

ENGINEERING CHANGE NOTICE

Page 1 of 2

1. ECN 160587

Proj. ECN

2. ECN Category (mark one)	Supplemental	[]	Change ECN	[]	Supersedure	[]	
Cancel/Void	[]	Direct Revision	[X]	Temporary	[]	Discovery	[]

3. Originator's Name, Organization, MSIN, and Telephone No. G.S. Hunacek Jr/100N Environ. Safety/X0-41/373-1673		4. Date 10/26/92
5. Project Title/No./Work Order No. N Reactor/1325N Operations	6. Bldg./Sys./Fac. No. 1325N	7. Impact Level 3EQ
8. Document Number Affected (include rev. and sheet no.) WHC-SD-NR-PLN-008 REV. ~~X0~~ 12/2/92	9. Related ECN No(s). NA	10. Related PO No. NA

11a. Modification Work	11b. Work Package Doc. No.	11c. Complete Installation Work	11d. Complete Restoration (Temp. ECN only)
[] Yes (fill out Blk. 11b) [X] No (NA Blks. 11b, 11c, 11d)	NA	NA Cog. Engineer Signature & Date	NA Cog. Engineer Signature & Date

12. Description of Change

This ECN modifies the N Reactor Effluent Sampling and Analysis Plan, WHC-SD-NR-PLN-008, Rev. ~~X0~~ in its entirety. 12/2/92

The N Reactor Effluent Sampling and Analysis Plan was revised to incorporate comments from the U.S. Evironmental Protection Agency and the Washington Department of Ecology. The sampling data quality objectives were also revised to expand and clarify data requirements.

13a. Justification (mark one)	Criteria Change	[]	Environmental	[X]	Facilitate Const.	[]	
Design Error/Omission	[]	Design Improvement	[]	As-Found	[]	Const. Error/Omission	[]

13b. Justification Details

Incorporation of regulatory agency comments

14. Distribution (include name, MSIN, and no. of copies)

G.S. Hunacek, Jr	X0-41	(10)
D.J. Watson	X0-41	(5)
C.D. Lucas	X0-35	(5)
K.A. Gano	X0-21	(2)
J.C. Plastino	X1-80	(2)
D.R. Speer	R1-48	(5)

MAR 1994 RECEIVED EPIC

RELEASE STAMP

OFFICIAL RELEASE 48 BY WHC DATE DEC 2 1992 Station 19

A-7900-013-2 (11/88) (EF) GEF095
Engineering Change Notice

A-7900-013-1 (11/88)

START

ENGINEERING CHANGE NOTICE

1. ECN (use no. from pg. 1): 160587

15. Design Verification Required	16. Cost Impact						17. Schedule Impact (days)		
	ENGINEERING			CONSTRUCTION					
[] Yes	Additional	[]	$NA	Additional	[]	$NA	Improvement	[]	NA
[X] No	Savings	[]	$NA	Savings	[]	$NA	Delay	[]	NA

18. Change Impact Review: Indicate the related documents (other than the engineering documents identified on Side 1) that will be affected by the change described in Block 12. Enter the affected document number in Block 19.

SDD/DD	[]	Seismic/Stress Analysis	[]	Tank Calibration Manual	[]
Functional Design Criteria	[]	Stress/Design Report	[]	Health Physics Procedure	[]
Operating Specification	[]	Interface Control Drawing	[]	Spares Multiple Unit Listing	[]
Criticality Specification	[]	Calibration Procedure	[]	Test Procedures/Specification	[]
Conceptual Design Report	[]	Installation Procedure	[]	Component Index	[]
Equipment Spec.	[]	Maintenance Procedure	[]	ASME Coded Item	[]
Const. Spec.	[]	Engineering Procedure	[]	Human Factor Consideration	[]
Procurement Spec.	[]	Operating Instruction	[]	Computer Software	[]
Vendor Information	[]	Operating Procedure	[]	Electric Circuit Schedule	[]
OM Manual	[]	Operational Safety Requirement	[]	ICRS Procedure	[]
FSAR/SAR	[]	IEFD Drawing	[]	Process Control Manual/Plan	[]
Safety Equipment List	[]	Cell Arrangement Drawing	[]	Process Flow Chart	[]
Radiation Work Permit	[]	Essential Material Specification	[]	Purchase Requisition	[]
Environmental Impact Statement	[]	Fac. Proc. Samp. Schedule	[]	NA	[X]
Environmental Report	[]	Inspection Plan	[]		[]
Environmental Permit	[]	Inventory Adjustment Request	[]		[]

19. Other Affected Documents: (NOTE: Documents listed below will not be revised by this ECN.) Signatures below indicate that the signing organization has been notified of other affected documents listed below.

Document Number/Revision	Document Number/Revision	Document Number Revision
NA	NA	NA

20. Approvals

	Signature	Date		Signature	Date
OPERATIONS AND ENGINEERING			ARCHITECT-ENGINEER		
Cog./Project Engineer	G.S. Hunacek Jr	11/17/92	OSM M.S. Hendrix	Michelle Hendrix	11-17-92
Cog./Project Engr. Mgr.	J.P. Schmidt	11/17/92	QA D.G. Farwick	D.G. Farwick	11/19/92
QA 100N	J.C. Plastino	11/17/92	PROJECTS D.L. Flyckt		11/17/92
H&WC	C.D. Lucas	11/17/92	SM&L C.D. Morrison	Bayer for	11/17/92
ENVIRONMENTAL SAFETY	D.J. Watson	11/17/92	LEGAL S.W. Berglin	see YRR form for signature	
Proj. Prog./Dept. Mgr.	D.R. Speer	11/17/92	ENVIRONMENTAL L.P. Diediker		11-17-92
100N ENNIRONMENTAL	~~K.A. Cano~~ B.L. Curn	11/17/92	DEPARTMENT OF ENERGY H.R. Trumble	H.R. Trumble	11/20/92
IRM DEPT	J.D. Hudspeth	11/17/92			
N REACTOR MANAGER H.L Debban		11/18/92	DEPARTMENT OF ENERGY ~~J.M. Hennig~~ L.S. Mamich		11/17/92
ADDITIONAL					

RECEIVED EPIC

A-7900-013-3 (11/88) (EF) GEF096
Engineering Change Notice (Page 2)

9413206.1228

Date Received: 11/23/92

INFORMATION RELEASE REQUEST

Reference: WHC-CM-3-4

Complete for all Types of Release

Purpose

[] Speech or Presentation
- [] Full Paper
- [] Summary
- [] Abstract
- [] Visual Aid

(Check only one suffix)

[] Speakers Bureau
[] Poster Session
[] Videotape

[] Reference
[] Technical Report
[] Thesis or Dissertation
[] Manual
[] Brochure/Flier
[] Software/Database
[] Controlled Document
[X] Other Sample Plan

ID Number (include revision, volume, etc.): WHC-SD-NR-PLN-008 REV. 1

List attachments.

Date Release Required: 11-24-92

Title: N REACTOR EFFLUENT SAMPLING AND ANALYSIS PLAN

Unclassified Category: UC-

Impact Level: 3E Q

New or novel (patentable) subject matter? [X] No [] Yes
If "Yes", has disclosure been submitted by WHC or other company?
[] No [] Yes Disclosure No(s).

Information received from others in confidence, such as proprietary data, trade secrets, and/or inventions?
[X] No [] Yes (Identify)

Copyrights? [X] No [] Yes
If "Yes", has written permission been granted?
[] No [] Yes (Attach Permission)

Trademarks?
[X] No [] Yes (Identify)

Complete for Speech or Presentation

Title of Conference or Meeting: NA

Group or Society Sponsoring: NA

Date(s) of Conference or Meeting

City/State

Will proceedings be published? [] Yes [] No
Will material be handed out? [] Yes [] No

Title of Journal

CHECKLIST FOR SIGNATORIES

Review Required per WHC-CM-3-4	Yes	No	Reviewer - Signature Indicates Approval: Name (printed)	Signature	Date
Classification/Unclassified Controlled Nuclear Information	[X]	[]	R.J. Pyzel		11-17-92
Patent - General Counsel	[X]	[]	S.W. Berglin		11/19/92
Legal - General Counsel	[X]	[]	S.W. Berglin		11/19/92
Applied Technology/Export Controlled Information or International Program	[]	[X]			
WHC Program/Project	[X]	[]	D.R. Speer		11-19-92
Communications	[]	[X]			
RL Program/Project	[X]	[]	~~J.M. Henning~~ L.S. Mannina H.R. Trumble		11/20/92
Publication Services	[X]	[]	J.D. Hudspeth		11/19/92
Other Program/Project	[]	[X]			

Information conforms to all applicable requirements. The above information is certified to be correct.

	Yes	No
References Available to Intended Audience	[X]	[]
Transmit to DOE-HQ/Office of Scientific and Technical Information	[]	[X]

Author/Requestor (Printed/Signature) Date
G.S. Hunacek Jr. 11/17/92

Intended Audience
[] Internal [] Sponsor [X] External

Responsible Manager (Printed/Signature) Date
J.P. Schmidt

INFORMATION RELEASE ADMINISTRATION APPROVAL STAMP

Stamp is required before release. Release is contingent upon resolution of mandatory comments.

APPROVED FOR RELEASE
V.B.
11/23/92

Date Cancelled

Date Disapproved

BD-7600-062 (08/91) WEF074

Part 1

THIS PAGE INTENTIONALLY
LEFT BLANK

SUPPORTING DOCUMENT

1. Total Pages 41

2. Title	3. Number	4. Rev No.
N REACTOR SAMPLING AND ANALYSIS PLAN	WHC-SD-NR-PLN-008	1

5. Key Words

N Reactor, NPDES, Sampling, 1325N

APPROVED FOR PUBLIC RELEASE

G. Burkland 11/23/92

6. Author

Name: G.S. Hunacek Jr

Signature

Organization/Charge Code KN311 11120

7. Abstract

The objective of the Sampling and Analysis Plan is to confirm stream characteristics; collect data to support NPDES permitting (if required); collect data on chemical and radiological constituents to determine loading and migration of of those constituents in the soil column and cofirm conclusions in the "N Reactor Effluent Stream-Specific Report, WHC-EP-0342, Addendum 3, that the 1325N stream is non-designated stream. Plan addresses sources of effluent, use of the effluent, location, type, and frequency of sampling.

WHC (1991): N Reactor Sampling and Analysis Plan, WHC-SD-NR-PLN-008, REV. 1
Author, Hunacek, Jr., G.S.

8. PURPOSE AND USE OF DOCUMENT - This document was prepared for use within the U.S. Department of Energy and its contractors. It is to be used only to perform, direct, or integrate work under U.S. Department of Energy contracts. This document is not approved for public release until reviewed.

PATENT STATUS - This document copy, since it is transmitted in advance of patent clearance, is made available in confidence solely for use in performance of work under contracts with the U.S. Department of Energy. This document is not to be published nor its contents otherwise disseminated or used for purposes other than specified above before patent approval for such release or use has been secured, upon request, from the Patent Counsel, U.S. Department of Energy Field Office, Richland, WA.

DISCLAIMER - This report was prepared as an account of work sponsored by an agency of the United States Government. Neither the United States Government nor any agency thereof, nor any of their employees, nor any of their contractors, subcontractors or their employees, makes any warranty, express or implied, or assumes any legal liability or responsibility for the accuracy, completeness, or any third party's use or the results of such use of any information, apparatus, product, or process disclosed, or represents that its use would not infringe privately owned rights. Reference herein to any specific commercial product, process, or service by trade name, trademark, manufacturer, or otherwise, does not necessarily constitute or imply its endorsement, recommendation, or favoring by the United States Government or any agency thereof or its contractors or subcontractors. The views and opinions of authors expressed herein do not necessarily state or reflect those of the United States Government or any agency thereof.

9. Impact Level 3EQ

10. RELEASE STAMP

OFFICIAL RELEASE BY WHC 48
DATE DEC 2 1992
Station 19

9413206.1230

WHC-SD-NR-008.
PLN Rev 1
12/2/92

TRADEMARK DISCLAIMER

Reference herein to any specific commercial product, process, or service by trade name, trademark, manufacturer, or otherwise, does not necessarily constitute or imply its endorsement, recommendation, or favoring by the United States Government or any agency thereof or its contractors or subcontractors.

This report has been reproduced from the best available copy.

Printed in the United States of America

DISCLM-4 CHP (1-91)

9413206.123

RECORD OF REVISION	(1) Document Number WHC-SD-NR-PLN-008	Page 1

(2) Title
N REACTOR SAMPLING AND ANALYSIS PLAN

CHANGE CONTROL RECORD

(3) Revision	(4) Description of Change - Replace, Add, and Delete Pages	Authorized for Release (5) Cog. Engr.	(6) Cog. Mgr. Date
X	(7) REV 0, EDT 126225, Dated September 27, 1992	G.S.Hunacek Jr	J.P. Schmidt
RS 1 11/2/92	Revised to incorporate comments from Ecology and EPA ECN 160587	11/17/92	11/17/92

9413206.1232

A-7320-005 (08/91) (EF) WEF168

THIS PAGE INTENTIONALLY
LEFT BLANK

CONTENTS

A. SAMPLING OBJECTIVES A-1
A.1 INTRODUCTION A-1
A.2 OBJECTIVES A-2
A.3 APPROACH A-2

B. SITE BACKGROUND B-1
B.1 N REACTOR FACILITY DESCRIPTION B-1
B.2 STREAM DESCRIPTION B-1
B.2.1 Parent Water Supply Sources B-1
B.2.1.1 Export Water System B-1
B.2.1.2 Filtered Water System B-4
B.2.1.3 Potable Water System B-4
B.2.1.4 Demineralized Water System B-4
B.2.1.5 Stormwater Intrusion B-4
B.2.2 Sources and Activities Contributing Potential Effluent to 1325-N LWDF B-4
B.2.2.1 Sources Contributing to Effluent Going to 1325-N LWDF B-4
B.2.2.1.1 Potable Water System and Fire System Leaks B-4
B.2.2.1.2 Fire System Runoff B-4
B.2.2.1.3 Stormwater Intrusion B-4
B.2.2.1.4 105-N Fuel Basin Activities B-4
B.2.2.1.5 105-N Lift Station and 105-N Decon Stations B-5
B.2.2.2 Activities Generating Effluent Going to 1325-N LWDF B-5
B.2.2.2.1 Radiation Zone Reduction B-5
B.2.2.2.2 105-N Fuel Basin Hardware Decontamination B-5
B.2.2.2.3 Draining and Decontamination of Pits and Sumps B-5
B.2.2.2.4 Draining and Decontamination of 105-N Fuel Basin B-5
B.2.2.2.5 Draining of D Reactor Test Loop . . B-5
B.2.3 Future Source Terms to Outfall 009 . . . . . B-6
B.2.3.1 Noncontaminated Effluent Discharging Source Term Presently Going to Outfall 009 . . B-6
B.2.3.1.1 Potable Water System and Fire System Leaks B-6
B.2.3.1.2 Cooling Water B-6
B.2.3.1.3 Stormwater Intrusion B-6
B.2.3.2 Contaminated Effluent Discharging Source Term Presently going to 1325-N LWDF B-6
B.3 DISPOSAL FACILITY DESCRIPTION B-6
B.3.1 1325-N Liquid Waste Disposal Facility Description . . . B-6
B.3.2 Outfall 009 . . . . . B-7

9413206.1233

CONTENTS (continued)

C. RESPONSIBILITIES C-1
C.1 EFFLUENT TREATMENT PROGRAMS C-1
C.2 N REACTOR ENVIRONMENTAL SAFETY C-1
C.3 N REACTOR HAZARDOUS AND RADIOLOGICAL WASTE CONTROL FUNCTION . . C-1
C.4 ENVIRONMENTAL PROCESS AND WASTE SAMPLING ENGINEER C-1
C.5 OFFICE OF SAMPLE MANAGEMENT C-2
C.6 N REACTOR OPERATIONS ORGANIZATION C-2
C.7 N REACTOR HEALTH AND SAFETY ORGANIZATION C-3
C.8 SAMPLING AND MOBILE LABORATORY ORGANIZATION C-3
C.9 QUALITY ASSURANCE ORGANIZATION C-3

D. SAMPLE LOCATION AND FREQUENCY D-1
D.1 SAMPLE LOCATION AND FLOW D-1
D.2 FREQUENCY D-2
D.2.1 Liquid Effluent Characterization Samples D-2
D.2.1.1 Sample Frequency Rationale D-2
D.2.1.2 Frequency of Liquid Effluent Characterization Samples D-2
D.2.1.3 Frequency of QA/QC Samples D-2
D.2.2 Routine Samples D-2

E. SAMPLE DESIGNATION E-1
E.1 LIQUID EFFLUENT CHARACTERIZATION SAMPLE LABELING E-1
E.2 ROUTINE SAMPLE LABELING E-1

F. SAMPLING EQUIPMENT AND PROCEDURES F-1
F.1 LIQUID EFFLUENT CHARACTERIZATION SAMPLES F-1
F.2 ROUTINE SAMPLES F-2

G. SAMPLE HANDLING AND ANALYSIS G-1
G.1 LIQUID EFFLUENT CHARACTERIZATION SAMPLING G-1
G.1.1 Rationale for Liquid Effluent Characterization Sample Analyte Selection G-1
G.1.2 Analytes and Methods of Analysis G-1
G.1.3 Liquid Effluent Characterization Sample Handling G-1
G.2 ROUTINE MONITORING G-6

H. REFERENCES H-1

APPENDIX

A TENTATIVE CONTAINERS AND PRESERVATION TECHNIQUES A-1

9413206.1234

LIST OF FIGURES

1 N Reactor Current Discharge to 1325-N Sample Location B-2

2 N Reactor Anticipated Future Discharge to Outfall 009 . . . . . B-3

LIST OF TABLES

1 Sample Location for N Reactor Streams D-1

2 Analytes and Analysis Methods G-2

3 Sampling Requirements N Reactor G-4

4 Routine Sampling Requirements N Reactor G-6

9143206.1245

LIST OF TERMS

BAT	best available technology
BOD	biochemical oxygen demand
CERCLA	*Comprehensive Environmental Response Compensation, and Liability Act of 1980*
CFR	Code of Federal Regulations
COD	chemical oxygen demand
DMR	discharge monitoring report
DOE	U.S. Department of Energy
Ecology	Washington State Department of Ecology
EDMC	Environmental Data Management Center
EPA	U.S. Environmental Protection Agency
EPWS	Environmental Process and Waste Sampling Engineer
ETP	Effluent Treatment Programs
FEMP	facility effluent monitoring plan
FSP	Field Sampling Plan
FY	fiscal year
HEIS	Hanford Environmental Information System
HPT	health physics technician
HRWC	Hazardous and Radiological Waste Control
LEMIS	Liquid Effluent Monitoring System
LWDF	liquid water disposal facility
NPDES	National Pollutant Discharge Elimination System
OSM	Office of Sample Management
PCB	polychlorinated biphenyl
QAPP	quality assurance program plan
RWP	radiation work permit
SAP	sample and analysis plan
Semi-VOA	semi-volatile organics
TDS	total dissolved solids
TOC	total organic carbon
Tri-Party Agreement	*Hanford Federal Facility Agreement and Consent Order*
VOA	volatile organics
WAC	Washington Administrative Code
Westinghouse Hanford	Westinghouse Hanford Company

9413206.1236

A. SAMPLING OBJECTIVES

A.1 INTRODUCTION

The *Hanford Federal Facility Agreement and Consent Order* (Tri-Party Agreement) (Ecology et al. 1990) was signed by the Washington State Department of Ecology (Ecology), the U.S. Environmental Protection Agency (EPA), and the U.S. Department of Energy (DOE) on May 15, 1989. Restrictions on the disposal of liquid effluents to the soil column at the Hanford Site are found in Tri-Party Agreement Milestone M-17-00 and corresponding interim milestones. Sample and Analysis Plans (SAP) are required for the 33 Phase I and Phase II streams that are discharged to the soil column. These SAPs are subject to the approval of EPA and Ecology.

9413206.1237

A SAP was prepared for the N Reactor wastewater. The *N Reactor Effluent Sampling and Analysis Plan*, WHC-SD-NR-PLN-008 (WHC 1991a), establishes the requirements and guidelines used by Westinghouse Hanford Company (Westinghouse Hanford) in implementing the liquid effluent sampling program for the N Reactor wastewater. It also provides for representative sampling of the N Reactor wastewater stream and accounts for expected variations in volumes and contaminant concentrations caused by facility operational conditions. Revision 0 of the SAP was submitted on September 30, 1991, to fulfill Tri-Party Agreement Milestone M-17-12. This document, Revision 1 of the N Reactor SAP, incorporates comments from EPA and Ecology on Revision 0. Guidance from EPA and DOE-Headquarters on the establishment of data quality objectives has also been incorporated into this document.

The requirements in this document are in addition to the *Liquid Effluent Sampling Quality Assurance Program Plan* (QAPP), WHC-SD-WM-QAPP-011 (WHC 1992). The QAPP provides the Hanford Site guidelines and quality assurance requirements for liquid effluent sampling activities, which include: overall scope and direction to the sampling activities, control of samples, laboratory analyses, processing and control of data, quality assurance requirements, and corrective actions used in obtaining high quality data for the Liquid Effluent Sampling Program. The data are obtained from controlled grab or composite samples called liquid effluent characterization samples that are used to characterize the distribution of analytes in the effluent.

The SAP is a facility-specific document for describing how the requirements of the QAPP shall be implemented for activities occurring at the facility. The SAP format and content is based on guidance for conducting remedial investigations and feasibility studies under Comprehensive Environmental Response Compensation, and Liability Act of 1980 (CERCLA) (EPA 1988) for a field sampling plan (FSP). The SAP provides a general description and identifies procedures that will be used to execute the work needed to implement the QAPP requirements.

An existing liquid effluent monitoring program is in place to meet the requirements of DOE Order 5400.1 (DOE 1990). The DOE order requires each facility develop a facility effluent monitoring plan (FEMP). The routine monitoring program complies with the requirements in the *Quality Assurance Program Plan for the Facility Effluent Monitoring Plan*, WHC-EP-0446 (WHC 1991b).

The QAPP was written to allow each facility some flexibility in accommodating the Hanford Site requirements. One primary reason for this flexibility is because of differences in procedures for surveying radiation sources at each facility. The QAPP requirements for chain of custody, laboratory analysis, validation of data, control of records, and corrective actions shall not be modified by this SAP.

A.2 OBJECTIVES

This SAP provides information on how sampling and analysis of the N Reactor wastewater will be performed to accomplished the desired objectives. The primary objectives are to:

- Obtain several sets of known data to develop a long-term sampling plan
- Confirm the analyte concentration data reported in the N Reactor Effluent Stream-Specific Report (WHC-EP-0342, Addendum 3) (WHC 1990a) and the conclusions that the stream does not contain dangerous waste as defined in Washington Administrative Code (WAC) 173-303, "Dangerous Waste Regulations," as amended (WAC 1989)
- Collect data as necessary to support applicable National Pollutant Discharge Elimination System (NPDES) permitting requirements for rerouting the effluent from the 1325-N Liquid Waste Disposal Facility (LWDF) to Outfall 009 following treatment by best available technology (BAT).

The secondary objectives are to meet future needs and do the following.

- Collect data on chemical and radiological constituents to support preparation of a groundwater impact assessment (per Tri-Party Agreement Milestone M-17-13) for continued discharge to the 1325 N LWDF until rerouting of the N Reactor effluent to Outfall 009 after treatment is complete.
- Provide data to support trend analysis and statistical evaluation of the waste from N Reactor.
- Provide data as necessary to support the design of a wastewater treatment system.

A.3 APPROACH

This SAP has been structured to obtain comprehensive quality sampling data that will identify the types of contaminants found in the liquid effluent streams from N Reactor. The data will come from grab samples, composite samples, and liquid effluent characterization samples that have quality controlled and verifiable methods for collecting, transporting, and analyzing the sample media; statistically evaluating the analytical results, and storing the sample records. All liquid effluent characterization sample work will be performed according to approved written procedures.

9413206.1238

Liquid effluent characterization samples will be obtained during two sampling events per year for a 2-year period starting from the date the plan is approved or the date when an analytical laboratory is found that can conduct the analyses herein described.

Because the N Reactor effluent stream is being permitted under the NPDES, sampling and analyses will be completed in accordance with EPA 40 Code of Federal Regulations (CFR) 136, Guidelines Established Test Procedures for the Analysis of Pollutants (EPA 1973).

Personnel associated with collecting liquid effluent characterization samples, processing the samples, processing the data, and controlling the records will comply with the procedures related to their responsibilities. The personnel will sign a document (form letter) verifying that they have read and understood the procedures. The signed document will become part of the field training records. The liquid effluent characterization samples are grab samples because some characterization constituents (volatile organics, ammonia) are unstable with time. Grab samples are used to minimize the holding time from sample collection to laboratory analysis to prevent a significant loss of these unstable analytes. In addition, liquid effluent characterization samples shall be obtained on the export (raw water), filtered/potable, and demineralized water systems. These samples will be analyzed for chemical constituents selected from Appendix A of the QAPP that are of concern for designating dangerous waste characteristics. Chemical analytes that are not found will be eliminated from the list of analytes in future liquid effluent characterization samples. Chemical analytes found in both the effluent and export (raw water) systems at equivalent concentration levels will also be eliminated from the list of analytes. The amended list shall be a Class 3 change in accordance with the Tri-Party Agreement, as stated in the QAPP.

The liquid effluent characterization sample data will also be used to provide a quality control check on the procedures and methods used in the existing routine monitoring sampling program. During the sampling for a liquid effluent characterization sample, extra sample containers will be obtained and sent to an onsite or offsite laboratory for routine analyses. The routine sample results will be compared with the liquid effluent characterization sample results for common analytes and concentrations. Recurring differences between routine and liquid effluent characterization data for similar analysis may require additional sampling and analysis to explain the differences.

The existing routine samples are taken at the 105-N Lift Station and the 105-N Fuel Basin. If liquid effluent are being discharged to the 1325-N LWDF, a sample will also be pulled at the 1325-N LWDF (see Table 1).

These samples have a very limited list of analytes because they are used for process control. The routine samples are collected, transported, and analyzed according to existing procedures at the Hanford Site. These existing procedures will not be modified unless it is determined that the existing routine monitoring program needs to be improved.

9413206.1239

The past routine samples provide an important pool of historical data. The number of samples provide soil column and process equipment solids loading information for future remediation studies, treatment process design, and permitting documentation. The data from the SAP samples will also be used to determine the causes of variations in the quality of the liquid effluent. The SAP includes the existing routine sampling program for the accumulation of historical information and to provide a baseline data pool for comparing the reliability and validity of past data.

9413206.1240

B. SITE BACKGROUND

B.1 N REACTOR FACILITY DESCRIPTION

N Reactor is located in the 100-N Area along the Columbia River approximately 29 mi north of Richland, Washington. From 1963 to 1987 it was operated by DOE and its contractors to produce special nuclear materials and steam for producing electricity. N Reactor currently is in dry lay-up configuration and shutdown activities have been started as a prerequisite to decommissioning.

Several radioactive and nonradioactive liquid effluent streams were produced by N Reactor during operations.. The effluent streams that were known to contain radioactivity, such as reactor cooling systems and the fuel storage basin, were routed to the 1325-N LWDF. The flow to the 1325-N LWDF during reactor operations from more than 20 process streams was 3,000 to 6,000 L/min (800 to 1,600 gal/min).

When the reactor was placed into dry lay-up status in 1990, the majority of the dischargers to the 1325-N LWDF ceased. Additionally, source controls implemented before the shutdown of the reactor have reduced the volumes of effluent routed to the 1325-N LWDF to less than 7.6 L/min (2 gal/min). This limit was established by Tri-Party Agreement Milestone M-17-15A.

9413206.1241

B.2 STREAM DESCRIPTION

Tri-Party Agreement Milestone M-17-15 requires that discharge of N Reactor Wastewater to 1325-N LWDF cease by June 1995. In addition to this requirement, and the flow restriction of 2 M gal/min, a flow cap of 1.8 M gal of effluent has been establish by the Tri-Party Agreement for continued discharge to the 1325-N LWDF until June 1995. At present, there has been no flow to 1325-N LWDF since April 1991. It is anticipated that, except for emergencies, no flow will go to 1325-N.

The wastewater will be routed to a treatment system before disposal at N Reactor's NPDES Permitted Outfall 009. The revised NPDES permit was submitted to EPA and Ecology in June 1992 in accordance with Tri-Party Agreement Milestone M-17-15D. The effluent streams from the N Reactor are described as follows in terms of its parent water supply sources, sources and activities contributing potential effluent to 1325-N LWDF (Figure 1) and future source terms to Outfall 009 (Figure 2).

B.2.1 Parent Water Supply Sources

B.2.1.1 Export Water System. The Columbia River is the source of water for the 100-N Area. Water intake structures at the 100-B/100-D reactor areas draw water from the river and pump it through a distribution network, referred to as the export water system.

Figure 1. N Reactor Current Discharge to 1325-N Sample Location.

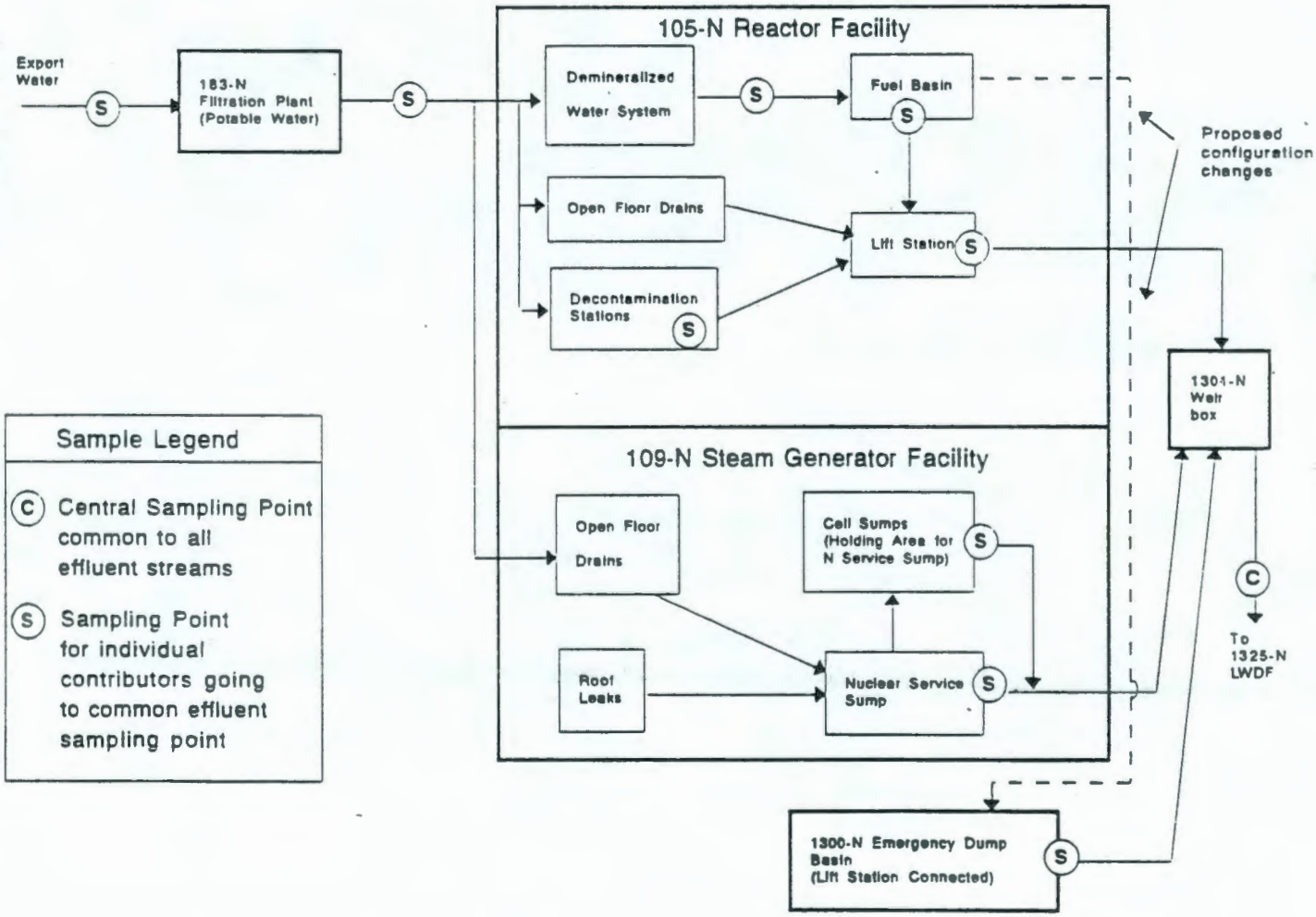

9413206.1242

Figure 2. N Reactor Anticipated Future Discharge to Outfall 009.

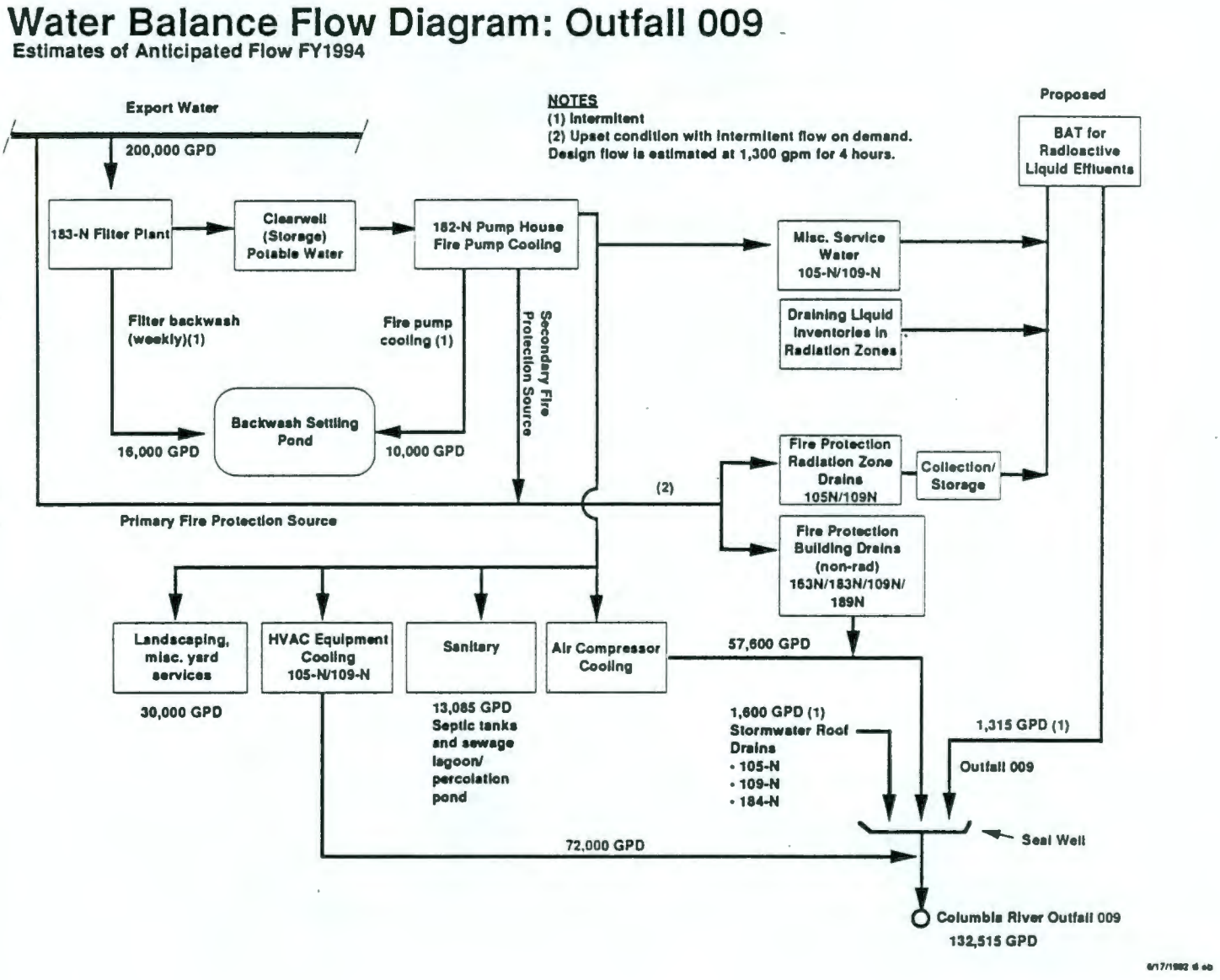

9413206.1243

This water distribution system serves the 100 and 200 Areas at the Hanford Site. This water to 100-N is then routed to the 183-N Filter Water Facility for further purification.

B.2.1.2 Filtered Water System. At the 183-N Filter Water Facility, the raw water is chemically treated with chlorine and alum in a mix tank, piped to a coagulator where polyacrylamide is added, and passes through sand filters.

B.2.1.3 Potable Water System. The potable water system uses filtered water with chlorine added to provide drinking water.

B.2.1.4 Demineralized Water System. Potable water is used as the water supply source to a small demineralization ion exchange column located in the 105-N Reactor Facility, for demineralized water makeup to N Basin.

B.2.1.5 Stormwater Intrusion. Stormwater runoff from the roof of the 109-N Building collects in radioactivity-contaminated sumps within the building. Stormwater from leaks in the 189-D roof is collected in a sump and periodically shipped by tanker truck to N Reactor for disposal. Approximately 5,000 gal of wastewater per year are shipped from the 189-D sump to N Reactor.

9413206.1244

B.2.2 Sources and Activities Contributing Potential Effluent to 1325-N LWDF

B.2.2.1 Sources Contributing to Effluent Going to 1325-N LWDF. There are five sources of wastewater that could discharge to the 1325-N LWDF (Figure 1). Most of these wastewater sources are intermittent. Based on water levels measured at the 105-N Lift Station over a 4-month period from April to August 1991, these sources could contribute on the order of 100,000 to 150,000 gal/yr of wastewater.

B.2.2.1.1 Potable Water System and Fire System Leaks. Wastewater from leaks in the potable and fire water systems in the 105-N and 109-N Building are discharged via floor drains, which potentially contain radioactivity, to the 1325-N LWDF. The volume of this discharge is unknown.

B.2.2.1.2 Fire System Runoff. If a fire occurred in contaminated areas of either the 105-N or 109-N Buildings, the water from fire fighting would be discharged to the 1325-N LWDF via the floor drains.

B.2.2.1.3 Stormwater Intrusion. Storm water from leaks in the roof of the 109-N Building collected in the building sumps is discharged to the 1325-N LWDF via the floor drains. Leaks in the 189-D facility roof cause rainfall to be collected in a sump within the 189-D facility. The waster water is periodically shipped by tanker truck to N Reactor for disposal. Approximately 5,000 gal of wastewater is collected yearly.

B.2.2.1.4 105-N Fuel Basin Activities. Water in the 105-N Fuel Basin overflows into the 105-N Lift Station and would be discharged to 1325-N LWDF. Overflow of the basin can be caused by moving large pieces of equipment or contaminated materials within the fuel basin. Wastewater from equipment and area decontamination activities within the fuel basin building is also discharged to the 105-N Lift Station. The total volume of wastewater

contributed to the discharge by 105-N Fuel Basin activities is unknown; average flow rates during Fuel Basin decontamination activities in April 1991 were on the order of 0.75 to 1.0 gal/min.

B.2.2.1.5 105-N Lift Station and 105-N Decon Stations. These are the decontamination stations for personnel and equipment within the 105-N Lift Station. The volume of wastewater contributed to the 105-N Lift Station is unknown. Currently, maintenance and operation activities within the 105-N Building have been substantially curtailed. As a result, the contribution of this source to the total 105-N Lift Station wastewater discharge is believed to be small.

B.2.2.2 Activities Generating Effluent Going to 1325-N LWDF

9413206.1245

Many of the activities to support the shutdown and cleanout of the N Reactor facility will generate quantities of wastewater (Figure 1). These activities are also described in greater detail in the *N Reactor Shutdown Program Plan* (WHC 1991c).

B.2.2.2.1 Radiation Zone Reduction. Contaminated areas within the 105-N and 109-N Buildings will be decontaminated to DOE requirements during the N Reactor shutdown. During this decontamination, substantial quantities of water will be used to flush and scrub contaminated areas. Approximately 400,000 gal of wastewater are anticipated to be generated by this activity annually during fiscal years (FY) 1994, 1995, and 1996.

B.2.2.2.2 105-N Fuel Basin Hardware Decontamination. Approximately 200,000 lb of underwater equipment and hardware that remains in the 105-N Fuel Basin must be removed and decontaminated before disposal. These activities are anticipate to generate approximately 150,000 gal of wastewater per year in FYs 1994 and 1995, and 1,110,000 gal of wastewater in FY 1997.

B.2.2.2.3 Draining and Decontamination of Pits and Sumps. The C and D Elevator Pits within the 105-N Fuel Basin area and wastewater sumps in the 105-N and 109-N Buildings will be drained and decontaminated. These activities are anticipated to generate a total of 570,000 gal of wastewater during FYs 1992, 1994, 1997, 1998, and 1999.

B.2.2.2.4 Draining and Decontamination of 105-N Fuel Basin. Water in the 105-N Fuel Storage Basin will be drained and the basin decontaminated. This activity is anticipated to generate approximately 150,000 gal of wastewater in FY 1996, 600,000 gal of wastewater in FY 1997, and 1,000,000 gal of wastewater in FY 1998.

B.2.2.2.5 Draining of D Reactor Test Loop. Approximately 45,000 gal of wastewater are scheduled to be drained from the D Reactor Test Loop in the 189-D facility in FY 1994; the disposal of this wastewater would involve processing at the N Reactor.

B.2.3 Future Source Terms to Outfall 009

There are two source terms of wastewater that will be discharged at the NPDES Outfall 009 (Figure 2). These are noncontaminated water sources presently permitted by NPDES permit number WA-000374-3 and those sources currently being discharged to 1325-N.

B.2.3.1 Noncontaminated Effluent Discharging Source Term Presently Going to Outfall 009

B.2.3.1.1 Potable Water System and Fire System Leaks. Leaks from the potable water and fire systems that occur in nonradiologically contaminated areas are collected in floor drains and discharged to the Columbia River at the Outfall 009. This flow is intermittent and of variable rate and volume.

B.2.3.1.2 Cooling Water. Between 60 and 80 gal/min of cooling water (raw water) from equipment and air conditioning units at the N Reactor are discharged to the Columbia River via Outfall 009.

B.2.3.1.3 Stormwater Intrusion. Stormwater runoff from roof and drains at the N Reactor is discharged to the Columbia River via Outfall 009. The volume and rate of this discharge is both intermittent and variable.

B.2.3.2 Contaminated Effluent Discharging Source Term Presently going to 1325-N LWDF. These sources as listed will be routed to Outfall 009 after treatment. A NPDES permit application was submitted in June 1992 per Tri-Party Agreement Milestone M-17-15D.

B.3 DISPOSAL FACILITY DESCRIPTION

It is necessary to describe both the 1325-N LWDF (active till June 1995) and permitted Outfall 009 (proposed reroute after BAT) because they both have potential to receive N Reactor effluent.

B.3.1 1325-N Liquid Waste Disposal Facility Description

The 1325-N LWDF consists of a 73-by-76-m (240-by-250-ft) rectangular crib, which can accommodate liquid to a depth of at least 0.6 m (2.0 ft) before overflowing into a trench. The trench extends from the crib in a northeast direction. The trench measures 910 m (3,000 ft) long, 17 m (55 ft) wide, and 2.1 m (7 ft) deep and is divided into four equal sections by a series of overflow weirs.

The trench was added after the crib was built because the slow percolation in the crib rendered it inadequate to handle the volume of wastewater discharged. Soon after the trench was built, the reactor was placed in standby and the effluent flow was reduced. As a result, on only two occasions has the level of liquid wastes in the 1325-N LWDF been high enough to spill into the first of four sections of the trench. The remaining three sections have never been wetted by the N Reactor discharges.

9413206.1246

Since it was opened in 1985, the 1325-N LWDF has received a maximum discharge of 7,570 L/min. By the time the reactor was prepared for its present cold standby status in January 1987, the flow rate had progressively decreased by flow reduction measures and draining of systems. During the recent sampling effort conducted for the stream-specific report, between October 1989 and March 1990, the 1325-N LWDF received wastewater at an average rate of less than 300 gal/min. Since March 1990, flows have been less than 2 gal/min.

Since April of 1991 there has been no flow to 1325-N LWDF.

B.3.2 Outfall 009

N Reactor Outfall 009 is contained in NPDES Permit WA-000374-3. A NPDES application for modification to the permit was submitted in June 1992 per Tri-Party Agreement Milestone M-17-15D. The discharge to the Columbia River is through a 102-in. outfall that originates in the 105-N Reactor Building and the 109-N Heat Exchange Building.

9413206.2147

This page intentionally left blank.

9413206.1248

C. RESPONSIBILITIES

The responsibility descriptions below are related to wastewater sampling activities at N Reactor as described in this SAP. Overall responsibilities for other components of the sampling program are described in the Liquid Effluent Sampling QAPP current version.

C.1 EFFLUENT TREATMENT PROGRAMS

- Coordinate the overall program.
- Act as the liaison between facilities and RL.
- Prepare the Quality Assurance Program Plan.
- Provide the Program Manager.
- Manage input of validated data into the Liquid Effluent Monitoring Information System (LEMIS).
- Issue a liquid effluent characterization annual report to EPA and Ecology.

C.2 N REACTOR ENVIRONMENTAL SAFETY

- Prepare the N Reactor effluent sampling and analysis plan.
- Coordinate N Reactor sampling with other Westinghouse Hanford activities.
- Review the liquid effluent characterization annual report.
- Ensure that the primary and secondary objectives in Section A.2 are met.

C.3 N REACTOR HAZARDOUS AND RADIOLOGICAL WASTE CONTROL FUNCTION

- Appoint the environmental process and waste sampling engineer (EPWS) who will be the sample task leader at N Reactor.

C.4 ENVIRONMENTAL PROCESS AND WASTE SAMPLING ENGINEER

- Sample task leader to coordinate sampling activities at N Reactor.
- Ensure that procedures are prepared and updated to support the routine sampling at N Reactor.
- Initiate scheduling of personnel required for sampling.

9413206.1249

- Provide technical support for sampling activities.
- Review data logs and sampling activities.
- Ensures chain-of-custody procedures are followed at the facility.
- Ensure liquid effluent characterization sampling data and flow information are transferred to the Environmental Data Management Center (EDMC) for filing with Effluent Treatment Programs (ETP).
- Reviews liquid effluent characterization sampling data for completeness and consistency, initiating corrective action if necessary.
- Provide flow data for the Effluent Treatment Programs.
- Provide routine sampling data for N Reactor wastewater to the Effluent Treatment Programs.
- Transmit copies of the validated data, from the liquid effluent characterization sampling and routine sampling, to Effluent and Emissions Monitoring for inclusion in the annual report of environmental releases, if requested.

9413206.1250

C.5 OFFICE OF SAMPLE MANAGEMENT

- Validate the data for a Level C validation per "Data Validation for RCRA Analysis," WHC-CM-5-3, Section 2.0 (WHC 1990b).
- Select a laboratory for liquid effluent characterization samples from previous Westinghouse Hanford approved laboratories.
- Transmit validated data packages to the EDMC, which include a copy of the chain-of-custody documentation.

C.6 N REACTOR OPERATIONS ORGANIZATION

- Provides a trained operator for escort during liquid effluent characterization sampling.
- Provides sampling and transportation of routine monitoring program samples.
- Completes sample log sheets for routine monitoring program samples.
- Assists the liquid effluent characterization samplers as required.

C.7 N REACTOR HEALTH AND SAFETY ORGANIZATION

- Provides a health physics technician (HPT) for radiation surveying of liquid effluent characterization sample packages.
- Provides the radiation work permit (RWP) instructions for zone entry.
- Verifies radiation worker training requirements of sampling personnel.
- Stops work if there is undue risk to health or safety.

C.8 SAMPLING AND MOBILE LABORATORY ORGANIZATION

- Provides trained samplers for liquid effluent characterization sampling activities. One sampler shall have a Westinghouse Hanford Certificate of Qualification from the sampling and mobile laboratories organization. Certificated sampler will direct liquid effluent characterization sampling, packaging, and shipping.
- Prepares the N Reactor wastewater liquid effluent characterization sampling procedure.
- Documents sampling activities in a log book.
- Transports liquid effluent characterization samples to laboratory or shipping center.
- Initiates "chain-of-custody" documentation for liquid effluent characterization samples.
- Packages liquid effluent characterization samples for shipping.
- Ensures that copies of field logs and other sampling data sheets are filed with N Reactor Environmental Process and Waste Sampling Engineer.

C.9 QUALITY ASSURANCE ORGANIZATION

- Provides surveillance of the liquid effluent characterization sampling program.
- Audits records and procedures.
- Issues a stop work order if procedures are not being followed.

This page intentionally left blank.

9413206.1252

D. SAMPLE LOCATION AND FREQUENCY

D.1 SAMPLE LOCATION AND FLOW

Sample locations have been selected based on the current reduced flow for the N Reactor shutdown configuration to sample the effluent sources to the 1325-N LWDF that are accessible and can provide a sufficient volume of water for the effluent flow to provide a representative sample. Effluent flow rates will be measured, recorded, and included in the sample data package for each sampling location. Table 1 identifies the 12 sample locations by facility and the specific area or room.

Table 1. Sample Location for N Reactor Streams.

Sample	Location
Parent Sources	
Export Water	183-N Coagulation Pump Room
Filtered water/potable water	183-N Control Room
Demineralized water	105-N Room 192
Stormwater Intrusion	189-D (D Reactor)
Source Terms	
Fuel Basin	105-N Room 192
Lift Station	105-N Lift Station Pump Well Room 43
Decontamination Stations	105-N Various Locations (as required)
Cell Sumps	109-N (sumps)
Nuclear Sump	109-N Room 23
Emergency Dump Basin	1300-N Emergency Dump Basin
Point of Release	
Outfall 009	Outfall 009 NPDES Permit
1325-N LWDF	Common point for discharges
Treated N Reactor Effluent	Future sampling

As indicated in Figure 1, the combined discharge sampling point will be taken at the 1325-N LWDF. The limit is 2 gal/min (per M-17-15A September 1991 Tri-Party Agreement milestone). These are not continuous streams, but are batch discharges. The lift station, sumps, and emergency dump basin would be discharged separately and at different times. Discharge flow rate would be determined by measuring the sumps before and after pumping or by monitoring at the discharge to the 1325-N LWDF.

9413206.1253

D.2 FREQUENCY

D.2.1 Liquid Effluent Characterization Samples

D.2.1.1 Sample Frequency Rationale. Sampling frequency is based on the N Reactor shutdown status and the fact that no effluent has gone to the 1325-N LWDF since April 1991. Except for upset conditions, those activities that will generate radioactive effluent in the future will be treated by a BAT process, then discharged to the Columbia River. Upset conditions resulting from a pipe break or activation of the fire protection system would generate a water inventory that would have to be discharged to 1325-N LWDF until June 1995. Sample frequencies and parameters will be part of the revised NPDES permit.

9413206.1254

D.2.1.2 Frequency of Liquid Effluent Characterization Samples. Liquid effluent characterization sampling will be initiated within 3 months after approval of this SAP or after a qualified laboratory has been selected to conduct the analysis.

At present no liquid is going to 1325-N LWDF. At least one sampling round will be taken before any N Reactor activity is initiated that would cause effluent to be discharged to the 1325-N LWDF.

Liquid effluent characterization samples will be obtained during two sampling events per year for 2 years starting from the date the plan is approved or the date when an analytical laboratory has been approved, that has the capability to conduct the analysis here in described.

D.2.1.3 Frequency of QA/QC Samples. Field duplicate samples, field blanks, and trip blanks will be taken during each sampling event. Field duplicate samples are samples taken at approximately the same time under identical conditions and prepared the same way to verify the repeatability of sample collection, preservation, storage, and laboratory data. Field blanks and trip blanks are reverse osmosis/deionized or ASTM Type II water used to check for possible contamination originating from the reagent, sampling environment, container preparation, shipment, handling, or storage. Equipment blanks may not be necessary because samples are collected in a precleaned container on a stick. Duplicate and blank results will be used in the validation of the laboratory data per Section 2 of WHC-CM-5-3 (WHC 1990b).

D.2.2 Routine Samples

Routine sampling for the N Reactor effluent stream to the 1325-N LWDF is performed weekly using a grab sample. If there is no flow, a sample is taken at the 105-N Lift Station (Figure 1). A monthly sample is also taken at the 105-N Fuel Basin. See Figure 1 and Section G.2, "Routine Monitoring." Sampling frequency at the Outfall 009 is specified in the current NPDES permit and reported monthly to EPA by a discharge monitoring report (DMR).

E. SAMPLE DESIGNATION

E.1 LIQUID EFFLUENT CHARACTERIZATION SAMPLE LABELING

Sample labels for liquid effluent characterization samples shall be furnished by the sampling team from the Sampling and Mobile Laboratories. The labels will require the following information to be recorded by a member of the sampling team.

- Identification of the person in charge of collecting the sample.
- A unique sample identification number.
- Date and time the sample was collected.
- The place the sample was collected.
- The stream identification.
- The analysis to be performed on the sample.
- The preservative added.

The unique sample number shall be obtained from the Hanford Environmental Information System (HEIS). In addition to identification numbers, the samples will require labeling to indicate potential hazards. Any preneutralized-solution sample container must bear a dangerous waste designation number D002. All sample containers requiring a radiation sticker will be labeled with a radiation sticker before release.

9413206.1255

E.2 ROUTINE SAMPLE LABELING

Sample labeling shall be at the direction of the EPWS. The numbers on the label will be assigned by the EPWS.

The general numbering method will be as follows:

U - 000000 - 00000 A
(date) - (seq. #) (bottle letter)

Date = last two digits of month, day, and year. (Date is optional in abbreviation of reports and labels.)

Sequence number = laboratory log book control number.

Container letter = sequential lettering of multiple bottles.

(Container letter is optional for single bottle samples.)

The samples also will have the time preceding the assigned number.

In addition to identification numbers, the samples will require labeling that meets Department of Transportation shipping requirements to indicate radiation/chemical hazards.

This page intentionally left blank.

9413206.1256

F. SAMPLING EQUIPMENT AND PROCEDURES

F.1 LIQUID EFFLUENT CHARACTERIZATION SAMPLES

The liquid effluent characterization sampling will comply with specific procedures prepared for the sampling of the liquid effluent streams from N Reactor. Those procedures will be based on recommended practices found in SW-846, Chapter 9 (EPA 1982, 1984, 1985) and QAPP Section 2.4. The sampling procedure, prepared by Sampling and Mobile Laboratory organization, will identify N Reactor specific requirements, which include the following:

- A description of sampling equipment, containers and reagents
- Safety precautions including personal protective equipment
- Steps for collecting each sample
- Instructions for completing field logbook entries, sample labels, and sample chain-of-custody forms
- Sampling equipment, maintenance, and calibration.

Sampling will be surveyed at random by a cognizant Quality Assurance person.

9413206.1257

Sampling equipment for the liquid effluent characterization samples may be by a long-handled dipstick for lowering the sample containers. The export, filter/potable, and demineralized water shall be run through a purged pipe tap into sample containers. Samples shall be collected in new commercially available certified precleaned containers. Sampling equipment may not require maintenance and calibration procedures.

When an analyses requires that a preservative be added to the sample container, the preservative is added in a clean laboratory environment prior to traveling to the sampling site. At that time a container chain-of-custody is completed and follows that container into the field. The sample container is stored in a cooler sealed with tamper evident tape and all custody transfers are noted on the container chain-of-custody form. When the container is used to collect a sample, a sample chain-of-custody form is initiated which follows the sample until its ultimate delivery to the analytical laboratory. The container chain-of-custody form is maintained in the Sampler's file as a quality record. Samples will be packed in accordance with a Processing and Analytical Laboratory Procedure similar to the *Environmental Investigations and Site Characterization Manual*, WHC-CM-7-7, Procedure EII 5.11 "Sampling Packaging and Shipping." This procedure will be provided by the Sampling and Mobile Laboratory organization for liquid effluent characterization samples.

Field logs will be completed in accordance with a Processing and Analytical Laboratory Procedure similar to the *Environmental Investigations and Site Characterization Manual*, WHC-CM-7-7, Procedure EII 1.5 "Field Logbooks" (WHC 1988) at the time of sampling by the sampling team. This procedure will be provided by the Sampling and Mobile Laboratory organization. A field logbook that contains information pertinent to the sampling shall be maintained; the information shall be quality record documents.

Sample data that has been validated will be transferred to ETP for inclusion in the EDMC files and be prepared for public release.

The N Reactor export, filter, potable, and demineralized water will be drawn under similar conditions and on the same day the sample is taken. If there is no flow, the samples may be grab samples using a long-handled dipstick for lowering the containers. The sample may be a 24-h composite if there is flowing effluent, using a long-handled dipstick for lowering the containers.

Grab samples will be collected for pH, temperature, cyanide, total phenols, residual chlorine, and oil and grease. For all other analytes, 24-h composite grab sample are used. However, a minimum of one grab sample may be taken for effluent from basins, sumps, etc., with a retention period of greater than 24 h, as stated in EPA 40 CFR 122, "Administered Permit Programs: The National Pollutant Discharge Elimination System" (EPA 1983).

9413206.1258

F.2 ROUTINE SAMPLES

The routine process sampling is conducted by facility operational staff trained to comply with N Reactor Procedure, "Sample Liquid Effluent Stream" and N Reactor Procedure "Pack and Ship Samples." Each sample is two 500-ml polyethylene containers with plastic-lined caps. The containers shall be new polyethylene containers.

The samples are labeled with a sample tag containing sample point identification, an unique sample number, date and time. The samples are taken to the designated onsite/offsite laboratory for analysis.

Data sheets are filled out at the time of sampling with the contain date, time, batch number, stream flow (if any) and operator initials. The completed data sheets are delivered to EPWS. The data sheets are reviewed and filed by EPWS with the completed analytical results from the laboratory.

N Reactor wastewater discharges are determined by measuring the building basin, lift station, or sump levels before and after pumping or through monitoring of the discharge to the 1325-N LWDF.

Data and sample results that have been reviewed will be transferred to ETP and to Effluent and Emissions Monitoring for the annual report of environmental releases.

G. SAMPLE HANDLING AND ANALYSIS

G.1 LIQUID EFFLUENT CHARACTERIZATION SAMPLING

G.1.1 Rationale for Liquid Effluent Characterization Sample Analyte Selection

These analytes were selected based on constituents known or suspected to be associated with the wastewater. They were chosen after review of data from past characterization activities, especially sampling for the *N Reactor Effluent Stream-Specific Report* (WHC-EP-0342, Addendum 3), to fulfill the data quality objectives from Section A.2 of this SAP for background water sources.

Conductivity, pH, sulfate, nitrate, and metals were selected because they give a good indication of overall wastewater quality. Volatile and semi-volatile analyses were selected because they were detected in some of the samples taken for the *N Reactor Effluent Stream-Specific Report*. It is believed to be an anomaly, so future sampling should confirm the absence of volatile and semi-volatiles in the wastewater.

Radionuclide analysis for $^{238,239,240}Pu$ and total alpha/beta will provide information on radionuclide content of the wastewater at the time sampling was performed and will provide a basis for comparison against routine monitoring program data. These radionuclides will be analyzed by the selected analytical laboratory's method because there is no prescribed standard method.

Analysis for total dissolved solids (TDS), total oil and grease, chemical oxygen demand (COD), alkalinity, were added to provide data necessary for the permit process.

G.1.2 Analytes and Methods of Analysis

Liquid effluent characterization samples will be analyzed for the substances listed in Table 2.

Sampling at N Reactor is identified by an "X" in Table 3. These analytes will be tested by methods identified in the QAPP or SAP.

G.1.3 Liquid Effluent Characterization Sample Handling

Liquid effluent characterization samples and quality control samples will be collected in commercially available, individually certified containers. The certification of the precleaned condition shall accompany the container. The laboratory sample volume, container type, and preservative should be confirmed with Table II, "Required Containers, Preservation Techniques, and Holding Times" of 40 CFR 136 NPDES. Tentative container types, and preservatives are in the QAPP and Appendix A of the SAP. The sample volumes and number of containers are prescribed by the analytical laboratory and are subject to change. The QAPP will be updated to meet the requirements for preservation techniques and holding times as stated in 40 CFR 136.

9413206.1259

Table 2. Analytes and Analysis Methods.

Analyte list	EPA method of analysis[A]
Sulfide	376.1/376.2
Semi-volatile organics	625
Volatile organics	624
Organochlorine pesticides and PCB's	608
Phenolics	420.1/420.2/420.3
Purgeable aromatics	602
Purgeable halocarbons	601
Tin	282.1/282.2
Mercury	245.1/245.2
ICP metals	200.7
Lead	239.2
Arsenic	206.2
Selenium	270.2
Oil and Grease	413.1
Sulfate	375.1/375.3/375.4
Nitrogen, Kjeldahl, total	351.1/351.2/351.3/351.4
Bromide	320.1
Chloride	325.1/325.2/325.3
Cyanide	335.2/335.3
Fluoride	340.1/340.2
Ammonia (asN)	350.1/350.2/350.3
Nitrate-nitrite	353.3
Titanium	283.1/283.2
Thallium	279.2
Alkalinity	310.1/310.2

9413206.1260

Table 2. Analytes and Analysis Methods.

Analyte list	EPA method of analysis[A]
Total dissolved solids	160.1
pH	150.1[C]
Conductivity	120.1[C]
Acidity	305.1
Chemical oxygen demand	410.1/410.2/410.3/410.4
Total organic carbon	415.1
Biochemical oxygen demand	405.1
Phosphorus	365.2/365.3
Chlorine, total residual	330.1/330.2/330.3/330.4/330.5[C]
Total alpha/total beta	[B]
Gamma scan determination	[B]
Radium 226	[B]
Radium total	[B]
Strontium 89/90	[B]
Tritium	[B]
Plutonium 238/239/240	[B]
Uranium	[B]

[A]Before collection of a sample for metals, a decision will be made as to the type of data desired, that is dissolved, suspended or total, so that appropriate preservation and pretreatment steps may be accomplished. (Metal samples should include both total and total recoverable metal analysis.)
[B]Westinghouse Hanford approved laboratory method for radionuclides.
[C]Field tested.

9413206.1261

Table 3. Sampling Requirements N Reactor.

Parameter	Dupl	Field blank	Trip blank	Routine Split	Export water	Filter water	Demin water	Total recoverable metals	Total metals
Sulfide	x								
Semi-VOA	x	x	x		x	x	x		
VOA	x	x	x		x	x	x		
PCBs/Pesticides	x								
Phenolics	x								
Purgeable aromatics	x								
Purgeable halocarbons	x								
Tin	x							x	x
Mercury	x							x	x
ICP metals	x				x	x	x	x	x
Lead	x				x	x	x	x	x
Arsenic	x				x	x	x	x	x
Selenium	x				x	x	x	x	x
Oil and grease	x								
Sulfate	x								
Nitrogen Kjeldahl	x								
Bromide	x								
Chloride	x								
Cyanide	x								
Fluoride	x				x	x	x		
Ammonia	x								
Nitrate-nitrite	x								
Titanium	x							x	x
Thallium	X							x	x
Alkalinity	x								
TDS	x								
pH	x			x					
Conductivity	x			x					
Acidity	x								
COD	x								
TOC	x								
BOD	x								
Phosphorous	x								
Chlorine	x								
Alpha/Beta	x			x					
Radionuclides	x			x					

9413206.1262

Field notes will be kept by sampling personnel who will identify date, time, weather conditions, plant operational status, and any other relevant information from each sampling event. The field log for each sampling event will identify which intermittent wastewater contributors are operating for each location sampled. This information will be given to the samplers by the EPWS.

A chain-of-custody form will be filled out at the time of container preparation (preservative addition and prelabeling) and will accompany each sample. A sample may consist of several containers. The chain of custody will account for each container and may be filled out for a maximum of 20 containers or one cooler. Once the sample has been drawn, it must be in the physical control or view of the custodian, locked in an area where it can not be tampered with, or prepared for shipping with tamper-evident tape applied. The definition of physical control includes being in the sight of the custodian, being in a room that will signal an alarm when entered, or being locked in a cabinet.

9413206.1263

When more than one person is involved in sampling, one person alone shall be designated to sign as sampler. The sampler is the custodian until the samples are transferred to another location or group; he or she shall sign when releasing the samples to designated receiver. Any private carrier used to transport the samples and chain-of-custody documentation shall be bonded.

The liquid effluent characterization samples will be routed to an approved Westinghouse Hanford participant contractor or subcontractor laboratory for analysis consistent with 40 CFR 136 NPDES requirements.

The data will be considered representative so long as at least 90 percent of the data points meet the established requirements in the QAPP for precision and accuracy. Data that do not meet this objective will be reviewed to determine whether the data can be used or whether corrective action should be taken. Corrective action measures are described in Section 14.0 of the QAPP. If necessary, corrective action will consist of repeating the sampling and/or analysis activity. Validated data will be sent by the Office of Sample Management (OSM) to the Environmental Data Management Center. The data will be part of the administrative record for Tri-Party Agreement Milestone M-17-15. An electronic database (LEMIS) for managing these data is being developed and will be accessible by EPA and Ecology when it becomes available.

Copies of all sampling and analytical data will be maintained by the sampling task leader as quality records. The field logs will be maintained by Sampling and Mobile Laboratories. The original shipping papers will accompany the sample. Within 24 hours of sample shipment, the field samplers will transmit copies of the Sample Analysis Request Form, chain-of-custody documentation, and shipping papers to the OSM. Samplers must notify OSM of samples shipped to offsite laboratories on the day before a weekend on a holiday. The laboratory faxes a copy of the chain-of-custody and the sample analysis request to OSM to verify sample receipt. The record copy of the chain-of-custody and sample analysis request will be transmitted to OSM with the data packages.

G.2 ROUTINE MONITORING

Routine sampling is completed on the 105-N Lift Station and the 105-N Fuel Basin. If wastewater is being discharged to the 1325-N LWDF, a sample would also be pulled at the 1325-N LWDF. The effluent is collected in two clean 500-ml polyethylene container. This container is surveyed by a HPT and released. A chain-of-custody form accompanies all routine sampling.

Table 4 identifies the analytes to be evaluated and the sampling frequency for each routine sampling point.

Table 4. Routine Sampling Requirements N Reactor.

Parameter	105N Lift Station	105N Fuel Basin	1325N*
Gamma	weekly	monthly	weekly
Alpha	weekly	monthly	weekly
Beta	weekly	monthly	weekly
Sr-90	weekly	monthly	weekly
H_3	weekly	monthly	weekly
Pu 238/239/240	weekly	monthly	weekly
Temperature		weekly	
pH		weekly	
Conductivity		weekly	

*When there is no flow to the 1325N LWDF the sample is taken at the 105N Lift Station.

9413206.1264

H. REFERENCES

DOE, 1990, *General Environmental Protection Program*, DOE Order 5400.1, U.S. Department of Energy, Washington, D.C.

Ecology, EPA, and DOE, 1990, *Hanford Federal Facility Agreement and Consent Order*, 2 vols., as amended, Washington State Department of Ecology, U.S. Environmental Protection Agency, U.S. Department of Energy, Olympia, Washington.

EPA, 1973, 40 CFR 136, "Guidelines Establishing Test Procedures for the Analysis of Pollutants," Title 40, Code of Federal Regulations, Part 136, as amended, U.S. Environmental Protection Agency, Washington, D.C.

EPA, 1983, 40 CFR 122, "Administered Permit Programs: The National Pollutant Discharge Elimination System," as amended, U.S. Environmental Protection Agency, Washington, D.C.

EPA, 1988, *Guidance for Conducting Remedial Investigations and Feasibility Studies Under CERCLA*, EPA/530/6-89/004, OSWER Directive 9355.03-01, U.S. Environmental Protection Agency, Washington, D.C.

EPA, 1990, *Test Methods for Evaluating Solid Waste - Physical/Chemical Methods*, SW-846, 3rd Edition, U.S. Environmental Protection Agency/Office of Solid Waste and Emergency Response, Washington, D.C.

WAC, 1989, 173-303, "Dangerous Waste Regulation," Washington Administrative Code, as amended, Chapter 173-303, Washington State Department of Ecology, Olympia, Washington.

WAC, 1990, "State Waste Discharge Permit Program," Washington Administrative Codes, Chapter 173-216, Washington State Department of Ecology, Olympia, Washington.

WAC, 1990, 173-200, "Water Quality Standards for Groundwaters of the State of Washington," Washington State Department of Ecology, Olympia, Washington.

WHC, 1988, *Environmental Investigations and Site Characterization Manual*, WHC-CM-7-7, Westinghouse Hanford Company, Richland, Washington.

WHC, 1990a, *N Reactor Effluent Stream Specific Report*, WHC-EP-0432, Addendum 3, Westinghouse Hanford Company, Richland, Washington.

WHC, 1990b, *Sample Management and Administration*, WHC-CM-5-3, Westinghouse Hanford Company, Richland, Washington.

WHC, 1991a, *N Reactor Effluent Sampling and Analysis Plan*, WHC-SD-NR-PLN-008, Westinghouse Hanford Company, Richland, Washington.

WHC, 1991b, *Quality Assurance Project Plant for Facility Effluent Monitoring Plan Activities*, WHC-EP-0446, Westinghouse Hanford Company, Richland, Washington.

9413206.1265

WHC, 1991c, *N Reactor Shutdown Program Plan*, WHC-SP-0615, as amended, Westinghouse Hanford Company, Richland, Washington.

WHC, 1992, *Liquid Effluent Sampling Quality Assurance Program Plan*, WHC-SD-WM-QAPP-011, Rev. 2A, as amended, Westinghouse Hanford Company, Richland, Washington.

9413206.1266

APPENDIX A

TENTATIVE CONTAINERS AND PRESERVATION TECHNIQUES

9413206.267

This page intentionally left blank.

9413206.1268

APPENDIX A

1. A 500 ml polyethylene container, adjusted by adding zinc acetate plus sodium hydroxide to a pH >9 for sulfide.

2. Four 1-L amber glass containers with tetrofluoroethylene-lined caps, for semi-volatile organics, filled without bubble formation and with no head space. If residual chlorine is present, add 80 mg of sodium thiosulfate per liter of sample and mix well.

3. Two duplicate 40-ml amber glass containers with tetrofluoro-ethylene-lined system caps, for volatile organics, filled without bubble formation and with no head space. If residual chlorine is present, add 80 mg of sodium thiosulfate per liter of sample and mix well.

4. Four 1-L amber glass container with tetrafluoroethylene-lined cap, with no preservatives for organic chlorine pesticides and PCBs. If the sample will not be extracted within 72 h of collection, the sample should be adjusted to a pH range of 5.0 to 9.0 with sodium hydroxide solution or sulfuric acid. Record the volume of acid or base used. If aldrin is to be determined, add sodium thiosulfate when residual chlorine is present.

5. One 1-L glass container with tetrafluoroethylene-lined cap, adjusted with sulfric acid to a pH <2 for phenolics.

6. Collect about 500 ml of sample in a clean container for purgeable aromatics. Adjust the pH of the sample to about 2 by adding 1 + 1 HCL. Fill sample container so there are no air bubbles. If the sample contains free or combined chlorine, add sodium thiosulfate preservative (10 mg/40 ml is sufficient for up to 5 ppm CL_2) to the empty sample container just prior to shipping to the sampling site.

7. Two duplicate 40-ml amber glass containers with tetrafluoroethylene-lined septrum caps, for purgeable holocarbons, filled without bubble formation and with no head space. If the sample contains free or combined chlorine, add sodium thiosulfate preservative (10 mg/40 ml is sufficient for up to 5 ppm (Cl_2) to the empty sample container just prior to shipping to the sampling site.

8. A 1-L polyethylene container, will be used to collect the sample for tin. Before collection of the sample the EPWS will determine what type of data is desired, that is dissolved, suspended or total, so that the appropriate preservation and pretreatment steps may be accomplished. Filtration, acid preservation, etc., are to be performed at the time the sample is collected or as soon as possible thereafter. See number ten ICP metals for preservation techniques for dissolved, suspended, or total elements.

9. A 1-L polyethylene container, will be used to collect the sample for mercury. Before collection of the sample the EPWS will determine

9413206.1269

what type of data is desired, that is dissolved, suspended or total, so that the appropriate preservation and pretreatment steps may be accomplished. Filtration, acid preservation, etc., are to be performed at the time the sample is collected or as soon as possible thereafter. See number ten ICP metals for preservation techniques for dissolved, suspended, or total elements.

10. A 1-L polyethylene container will be used to collect the sample for ICP metals. Before collection of the sample, the EPWS will determine what type of data is desired, this is; dissolved, suspended or total, so that the appropriate preservation and pretreatment steps may be accomplished. Filtration, acid preservation, etc., are to be performed at the time the sample is collected or as soon as possible thereafter.

    For the determination of dissolved elements the sample must be filtered through a 0.45-μm membrane filter as soon as practical after collection. (Glass or plastic filtering apparatus are recommended to avoid possible contamination.) Use the first 50-100 ml to rinse the filter flask. Discard this portion and collect the required volume of filtrate. Acidity the filtrate with (1 + 1) HNO_3 to a pH of 2 or less. Normally, 3 ml of (1 + 1) acid per liter should be sufficient to preserve the sample.

    For the determination of suspended elements, a measured volume of unpreserved sample must be filtered through a 0.45-μm membrane filter as soon as practical after collection. The filter plus suspended material should be transferred to a suitable container for storage and/or shipment. No preservative is required.

    For the determination of total and total recoverable elements, the sample is acidified with (1 + 1) HNO_3 to pH of 2 or less as soon as possible, preferably at the time of collection. The sample is not filtered before processing.

11. A 1-L polyethylene container, will be used to collect the sample for lead. Before collection of the sample the EPWS will determine what type of data is desired, that is dissolved, suspended or total, so that the appropriate preservation and pretreatment steps may be accomplished. Filtration, acid preservation, etc., are to be performed at the time the sample is collected or as soon as possible thereafter. See number ten ICP metals for preservation techniques for dissolved, suspended or total elements.

12. A 1-L polyethylene container, will be used to collect the sample for arsenic. Before collection of the sample the EPWS will determine what type of data is desired, that is dissolved, suspended or total, so that the appropriate preservation and pretreatment steps may be accomplished. Filtration, acid preservation, etc., are to be performed at the time the sample is collected or as soon as possible thereafter. See number ten ICP metals for preservation techniques for dissolved, suspended or total elements.

9413206.1270

13. A 1-L polyethylene container, will be used to collect the sample for selenium. Before collection of the sample the EPWS will determine what type of data is desired, that is dissolved, suspended or total, so that the appropriate preservation and pretreatment steps may be accomplished. Filtration, acid preservation, etc., are to be performed at the time the sample is collected or as soon as possible thereafter. See number ten ICP metals for preservation techniques for dissolved, suspended or total elements.

14. A 2-L glass container with a tetrafluoroethylene-lined cap, adjusted with sulfuric acid to a pH <2 for total oil and grease.

15. A 250-ml polyethylene container, adjusted with sulfric acid to a pH <2 for Kheldahl Nitrogen.

16. A 1-L polyethylene container having no preservative, for nitrate.

17. A 500-ml polyethylene container having no preservative, for bromide.

18. A 125-ml polyethylene container, having no preservative, for chloride.

19. A 1-L polyethylene container, adjusted with sodium hydroxide to pH >12 for cyanide.

20. A 1-L polyethylene container, having no preservative for fluoride.

21. A 1-L polyethylene container, adjusted with sulfric acid to a pH <2 for ammonia.

22. A 250-ml polyethylene container, adjusted with sulfuric acid to a pH <2 for nitrate-nitrite.

23. A 1-L polyethylene container will be used to collect the sample for titanium. Before collection of the sample the EPWS will determine what type of data is desired, that is dissolved, suspended or total, so that the appropriate preservation and pretreatment steps may be accomplished. Filtration, acid preservation, etc., are to be performed at the time the sample is collected or as soon as possible thereafter. See number ten ICP metals for preservation techniques for dissolved, suspended or total elements.

24. A 1-L polyethylene container will be used to collect the sample for thallium. Before collection of the sample the EPWS will determine what type of data is desired, that is dissolved, suspended or total, so that the appropriate preservation and pretreatment steps may be accomplished. Filtration, acid preservation, etc., are to be performed at the time the sample is collected or as soon as possible thereafter. See number ten ICP metals for preservation techniques for dissolved, suspended or total elements.

25. A 125-ml polyethylene container, having no preservative, for alkalinity.

26. A 250-ml polyethylene container, having no preservative, for total dissolved solids.

27. A 125-ml polyethylene container, having no preservative, for pH.

28. A 125-ml polyethylene container, having no preservative, for conductivity.

29. A 125-ml polyethylene container, having no preservative, for acidity.

30. A 125-ml polyethylene container, adjusted with sulfuric acid to a pH <2 for chemical oxygen demand.

31. A 125-ml polyethylene container with tetrofluoroethylene-lined system caps for total organic carbon, filled without bubble function and with no head space. Use HCl or sulfric acid to adjust pH <2.

32. A 1-L polyethylene container, having no preservative, for biochemical oxygen demand.

33. A 125-ml polyethylene container, adjusted with sulfuric acid to pH <2, for phosphorus.

34. A 600-ml polyethylene container, having no preservative, for chlorine, total residual.

35. A 2-L polyethylene container; adjusted to a pH <2 by nitric acid; for total alpha and total beta; gamma scan determination; ^{226}Ra and radium total; $^{89/90}Sr$; tritium; $^{238,239,240}Pu$ and uranium total.

For the determination of total metals the sample is acidified with 1:1 redistilled HNO_3 to a pH of less than 2 at the time of collection. The sample is not filtered before processing.

To determine total recoverable metals, acidify the entire sample at the time of collection with concentrated redistilled HNO_3 5 ml/l. Preservatives required above will be vendor supplied and added to the containers where practiced in the field. The preferred method is in the laboratory. The containers will be labeled, then individually logged and relogged. The outer log will be topped with tamper-evident tape. The samples will be refrigerated at 4 °C until ready to ship, and will then be placed in a cooler containing ice.

9413206.1272