Attachment 51 – Appendix 8.11
Pretreatment Building
IQRPE Reports

Where information regarding treatment, management, and disposal of the radioactive source, byproduct material, and/or special nuclear components of mixed waste (as defined by the Atomic Energy Act of 1954, as amended) has been incorporated into this permit, it is not incorporated for the purpose of regulating the radiation hazards of such components under the authority of this permit and chapter 70.105 RCW. In the event of any conflict between Permit Condition III.10.A. and any statement relating to the regulation of source, special nuclear, and byproduct material contained in portions of the permit application that are incorporated into this permit, Permit Condition III.10.A. will prevail.

Additional appendices will be added to this appendix as new information is incorporated into this permit.

Drawings and Documents

Attachment 51 – Appendix 8.11
Pretreatment Building
IQRPE Reports

The following drawings have been incorporated into Appendix 8.11 and can be viewed at the Ecology Richland Office. **New drawings are in bold lettering.**

Drawing/Document Number	**Description**
24590-CM-HC4-HXYG-00138-01-01, Rev 0	IQRPE Integrity Assessment Report for Secondary Containment El. -45
24590-CM-HC4-HXYG-00138-01-02, Rev 00C	IQRPE Integrity Assessment Report for Below Grade PWD Ancillary Equipment
24590-CM-HC4-HXYG-00138-01-07, Rev 00B	IQRPE Integrity Assessment Report for Below Grade PWD Tanks
24590-CM-HC4-HXYG-00138-01-13, Rev 00A	IQRPE Integrity Assessment Report for El. 28 Secondary Containment
24590-CM-HC4-HXYG-00138-01-15, Rev 00A	IQRP Integrity Assessment Report for Below Grade PWD Transfer Lines, Secondary Containment, Ancillary Equipment and Corrosion Assessment
24590-CM-HC4-HXYG-00138-01-18, Rev 00A	IQRP Integrity Assessment Report for UFP Vessels
24590-CM-HC4-HXYG-00138-02-00013, Rev 00A	IQRPE Integrity Assessment Report for PWD Ancillary Equipment
24590-CM-HC4-HXYG-00138-02-00014, Rev A	IQRP Integrity Assessment Report for PWD-VSL-00015/16/44
24590-CM-HC4-HXYG-00138-02-00015, Rev 00A	IQRPE Integrity Assessment Report for RLD-VSL-00017A/B
24590-CM-HC4-HXYG-00138-02-00017, Rev 00A	IQRP Integrity Assessment Report for El. 0 RLD Ancillary Equipment
24590-CM-HC4-HXYG-00138-02-00019, Rev 00A	IQRPE Integrity Assessment Report FEP Vessels, Miscellaneous Treatment Units, and Ancillary Equipment
24590-CM-HC4-HXYG-00138-02-00020, Rev 00A	IQRPE Integrity Assessment Report for FEP-VSL-00017A/B, FEP-VSL-00005, FEP-SEP-00001A/B, and FEP-RBLR-00001A/B
24590-CM-HC4-HXYG-00138-02-00021, Rev 00A	IQRPE Integrity Assessment Report for TLP Ancillary Equipment
24590-CM-HC4-HXYG-00138-02-00022, Rev 00A	IQRPE Integrity Assessment Report for El. 56 Miscellaneous Treatment Units Secondary Containment
24590-CM-HC4-HXYG-00138-02-00023, Rev 00A	IQRPE Integrity Assessment Report for TLP Miscellaneous Treatment Units and Vessels
24590-CM-HC4-HXYG-00138-02-00027, Rev 00A	IQRPE Integrity Assessment Report for RDP-VSL-00002A/B/C
24590-CM-HC4-HXYG-00138-02-00028, Rev 00A	IQRPE Integrity Assessment Report RDP Ancillary Equipment
24590-CM-HC4-HXYG-00138-02-00031, Rev 00A	IQRPE Integrity Assessment Report for El. 77 Miscellaneous Treatment Units Secondary Containment
24590-CM-HC4-HXYG-00138-02-00033, Rev 00A	IQRPE Integrity Assessment Report for CXP Vessels
24590-CM-HC4-HXYG-00138-02-00034, Rev 00A	IQRPE Integrity Assessment Report El. 0 CXP Ancillary Equipment
24590-CM-HC4-HXYG-00138-02-00035, Rev 00C	IQRPE Integrity Assessment Report El. 0 PVP Ancillary Equipment
24590-CM-HC4-HXYG-00138-02-00036, Rev 00A	IQRPE Impendent Assessment Report for CNP-VSL-00001/3/4
24590-CM-HC4-HXYG-00138-02-00037, Rev 00B	IQRPE Impendent Assessment Report for CNP Ancillary Equipment
24590-CM-HC4-HXYG-00138-02-00040, Rev 00A	IQRPE Integrity Assessment Report for RDP-VSL-00004
24590-CM-HC4-HXYG-00138-02-00041, Rev 00A	IQRPE Integrity Assessment Report El. 0 RDP-VSL-00004 Ancillary Equipment
24590-CM-HC4-HXYG-00138-02-00045, Rev 00B	IQRPE Integrity Assessment Report CNP Miscellaneous Treatment Units
24590-CM-HC4-HXYG-00138-02-00046, Rev 00A	IQRPE Impendent Assessment Report for PJV-VSL-00002
24590-CM-HC4-HXYG-00138-02-00047, Rev 00A	IQRPE Impendent Assessment Report for El. 0 PJV Ancillary Equipment
24590-CM-HC4-HXYG-00138-02-00051, Rev 00A	IQRPE Integrity Assessment Report for PVP-VSL-00001, PVP-SCB-00002
24590-CM-HC4-HXYG-00138-02-00054, Rev 00A	IQRPE Integrity Assessment Report for TLP-VSL-00009A/B

Drawing/Document Number	**Description**
24590-CM-HC4-HXYG-00138-02-00057, Rev 00A	IQRPE Integrity Assessment Report for E1. -2'.0" RLD Tanks RLD-TK-00006 A/B
24590-CM-HC4-HXYG-00138-02-01A, Rev A	IQRPE Integrity Assessment Report for El. 0 Secondary Containment
24590-CM-HC4-HXYG-00138-02-02, Rev 00A	IQRPE Integrity Assessment Report for FRP Ancillary Equipment, Rev. 1
24590-CM-HC4-HXYG-00138-02-03, Rev 00B	IQRPE Integrity Assessment Report for FRP-VSL-00002A/B/C/D
24590-CM-HC4-HXYG-00138-02-04, Rev 00B	IQRPE Integrity Assessment Report for TCP-VSL-00001
24590-CM-HC4-HXYG-00138-02-05, Rev 00A	IQRPE Integrity Assessment Report for TCP Ancillary Equipment
24590-CM-HC4-HXYG-00138-02-06, Rev 00A	IQRPE Integrity Assessment Report for UFP Ancillary Equipment
24590-CM-HC4-HXYG-00138-02-09, Rev 00A	IQRPE Integrity Assessment Report for HLP Ancillary Equipment
24590-CM-HC4-HXYG-00138-02-10, Rev 00A	IQRPE Integrity Assessment Report for HLP-VSL-00022, 00027A/B, and 00028
RESERVED	RESERVED

Bechtel Systems
&
Infrastructure, Inc.

JOB No. 24590

SUPPLIER DOCUMENT STATUS

1. ☐ WORK MAY PROCEED
2. ☒ REVISE AND RESUBMIT. WORK MAY PROCEED SUBJECT TO RESOLUTION OF INDICATED COMMENTS
3. ☐ REVISE AND RESUBMIT. WORK MAY NOT PROCEED
4. ☐ REVIEW NOT REQUIRED. WORK MAY PROCEED.

PERMISSION TO PROCEED DOES NOT CONSTITUTE ACCEPTANCE OR APPROVAL OF DESIGN DETAILS, CALCULATIONS, ANALYSES, TEST METHODS, OR MATERIALS DEVELOPED OR SELECTED BY THE SUPPLIER AND DOES NOT RELIEVE SUPPLIER FROM FULL COMPLIANCE WITH CONTRACTUAL OBLIGATIONS.

	M	P	ML	H	MH	E	C&I	CS&A	PD	PT	ESH
REVIEWED											BR

G-321 DOCUMENT CATEGORY N/A
[From Supplement A to G-321-E (E) or G-321-V (V), as applicable]
RESPONSIBLE ENGINEER for C.E. Kartiveam DATE 7/12/02

24590-CM-HC4-HXYG-00138-01-01

SUBCONTRACT SUBMITTAL

7/12/02 7/12/02

Processed/ Data Entry ☒ Copied/ QA ☐ Scanned ☐ Filed

STRUCTURAL INTEGRITY ASSESSMENT OF THE WASTE TREATMENT AND IMMOBILIZATION PLANT

PRETREATMENT SECONDARY CONTAINMENT ELEVATION -45' -0" DESIGN PACKAGE

COGEMA-IA-001
Rev. 0

RPP-WTP
RECEIVED
JUL 0 8 2002
BY PDC

24590-CM-HC4-HXYG-00138-01-01

IQRPE REVIEW – PRETREATMENT SECONDARY CONTAINMENT ELEVATION -45'-0" DESIGN PACKAGE

"I, John T. Baxter have reviewed, and certified a portion of the design of a new tank system or component located at the Hanford Waste Treatment Plant, owned/operated by Department of Energy, Office of River Protection, Richland, Washington. My duties were independent review of the current design for the Pretreatment Secondary Containment Elevation -45'-0" Design Package as required by the Dangerous Waste Regulations, namely, WAC 173-303-640(3) (applicable paragraphs (i.e., (a) through (g)). ~~The project is still in the early phase of final design and parts of the package are still preliminary in detail~~; ~~however~~, the ~~materials~~ documentation reviewed indicate that the design intent fully satisfies the requirements of the WAC.

"I certify under penalty of law that I have personally examined and am familiar with the information submitted in this document and all attachments and that, based on my inquiry of those individuals immediately responsible for obtaining the information, I believe that the information is true, accurate, and complete. I am aware that there are significant penalties for submitting false information, including the possibility of fine and imprisonment."

The attached review is 3 sheets numbered 1 through 3.

JOHN T. BAXTER
STATE OF WASHINGTON
16978
REGISTERED
PROFESSIONAL ENGINEER

EXPIRES: 10 / 28 / 02

John T. Baxter

July 3, 2002

Signature Date

24590-CM-HC4-HXYG-00138-01-01

	Information Assessed	Y/N	Source of Information	Assessment
Tank Foundation	Description of Subsurface Conditions and Soil Bearing Capacity are Adequate.	Y	Engineering Specifications: 24590-BOF-3PS-C000-T0001, Rev. 1, Material Testing Services; 24590-BOF-3PS-CE01-T0001, Rev. 2, Excavation and Backfill; 24590-WTP-DC-ST-01-001, Rev. 0, Structural Design Criteria; H-1616-51, RPP-WTP Geotechnical Investigation Report by Shannon & Wilson, Inc., May 2000 (Not Reviewed).	1. The Structural Design Criteria adequately presents design guidance for both mat and spread footings based on the geotechnical site investigation for the facility (H-1616-51). Bearing capacity and settlement design parameters are furnished for the dense Hanford Upper and Lower Sand Units and Structural Fill. Use of the loose wind blown sands for foundations is precluded. 2. The Excavation and Backfill Specification provides structural backfill requirements based on the geotechnical report and adequate current codes and standards for selection, placing, and compacting structural backfill including testing of candidate fill materials and completed backfills. 3. The Specification for Material Testing Services provides current adequate codes and standards for testing of candidate structural fill materials and in-situ testing of structural fills as they are constructed. The codes and standards are consistent with those called out in the Excavation and Backfill specification.
	Foundation Design Loads (including full tanks) and Estimated Settlement are Adequately Considered	Y	24590-WTP-DC-ST-01-001, Rev. 0, Structural Design Criteria	The Structural Design Criteria uses current adequate standards to define design loads and load combinations (ASCE 7-98). Dead and Fluid loads are included in these loads and load combinations. Settlement design parameters are included in the Structural Design Criteria subsection on geotechnical parameters and foundation design.
	Design Calculation Approach and Design Basis of Footings with Design Standard References (e.g., ACI) are Adequate	Y	24590-WTP-DC-ST-01-001, Rev. 0, Structural Design Criteria; RPT-W375-RU00002, Issue 2, TWRS-P Facility Design Basis Earthquake - Peak Ground Acceleration, Seismic Response Spectra, and Seismic Design Approach; 24590-WTP-DB-ENG-01-001, Rev. 0, Basis of Design.	The Structural Design Criteria references current adequate design criteria for the design of concrete foundations and footings. ACI 318-99 is referenced for the design of commercial grade structures and ACI 349-01 is referenced for "safety" grade structures.
	Foundation Material is Compatible with the Soil	Y	24590-WTP-DC-ST-01-001, Rev. 0, Structural Design Criteria; 24590-WTP-DB-ENG-o1-001, Rev. 0, Basis of Design; 24590-WTP-3PS-DB01-t0001, Rev. 1, Engineering Specification for Furnishing and Delivering Ready Mix Concrete; 24590-BOF-3PS-C000-T0001, Rev. 1, Material Testing Services; 24590-WTP-3PS-D000-T0001, Rev. 0, Engineering Specification for Concrete Work.	ICD28 in the Basis of Design indicates that aggregate for the foundation concrete will be taken from Pit 30 as described in the ICD. The specification for Furnishing and Delivering Ready-Mix Concrete provides adequate current requirements for the selection of coarse and fine aggregates and the procurement of cementitious materials. Aggregates from Pit 30 should be checked for potential Alkali-Silica Reactivity since the coarse aggregates are mostly siliceous rock. Adequate test procedures are provided in the Material Testing Services specification for testing candidate aggregates. Instructions for mixing and delivering Ready-Mix Concrete are adequate and current. The specification for Concrete Work provides adequate requirements for forming the foundations, placing embedments for liners and reinforcing steel, and pouring the concrete. As noted in the Basis of Design document, the water table lies about 200 feet below the deepest foundations so there is little reason to expect compatibility problems between the concrete foundations and the site soils.

24590-CM-HC4-HXY6-00188-01-0

	Information Assessed	Y/N	Source of Information	Assessment
	Foundation will Withstand the Effects of Frost Heave	Y	24590-WTP-DC-ST-01-001, Rev. 0, Structural Design Criteria	The Structural Design Criteria includes adequate provisions to preclude frost heave in the section addressing Lateral Earth Pressure loads. All foundations are required to extend into the soil more than 30 inches below finish grade. The frost line is 30 inches below finished grade.
	Seismic Considerations are Adequate	Y	24590-WTP-DC-ST-01-001, Rev. 0, Structural Design Criteria; RPT-W375-RU00002, Issue 2, TWRS-P Facility Design Basis Earthquake - Peak Ground Acceleration, Seismic Response Spectra, and Seismic Design Approach; 24590-WTP-DB-ENG-01-001, Rev. 0, Basis of Design.	The Structural Design Criteria provides current adequate codes and standards for the design of the secondary containment structures and their liners. Lateral force design requirements for safety grade structures are consistent with guidance in RPT-W375-RU-00002, Issue 2. Lateral force requirements for commercial grade structures are taken from the Uniform Building Code (1997) which is appropriate. Design codes for safety grade structures are ACI 349-01 and AISC N690-1994 for concrete and steel structures respectively. Design codes for commercial grade structures are ACI-318 and AISC M016-89 for concrete and steel respectively.
Secondary Containment	COMPATIBILITY & STRENGTH			
	The stored waste is compatible with its SC and leak detection hardware based on a detailed chemical and physical analysis of the waste(s) used and other information sources	Y	1. Bechtel Letter Contract: BRN-HXYG-0138-105, July 1, 2002 2. 24590-WTP-PER-M-02-001, Material Selections for Building Secondary Containment/Leak Detection, July 1, 2002.	The secondary containment (SC) and leak detection equipment is compatible with the expected stored waste and corrosive chemical spills. The cells and sumps are appropriately lined and any spills are removed and flushed within 24-hr. Two tanks at -45 ft (PWD-VSL-00045 and -00033, per reference 1) are assumed to be catch tanks for cell drains and process overflows. One sump serves both tanks. The tank cell floor and walls are to be lined with leak-tight type 304L stainless steel. The wet sump is made of appropriate materials as defined in reference 2. The leak detection equipment material is to have equal or better corrosion resistance than the sump material.
	The design indicates that the SC has sufficient strength and thickness to prevent failure owing to pressure gradients, static head during a release, physical contact with the waste, climatic conditions, and the stress of daily operations (e.g. vehicular traffic).	Y	24590-WTP-DB-ENG-01-001, Rev. 0, Basis of Design; 24590-WTP-PER-CSA-02-001, Rev. 0, Secondary Containment Design	These general requirements are stated as general design goals in the Basis of Design document. The explicit design codes and standards, loads and load combinations are stated in the Secondary Containment Design document. These requirements and codes and standards are adequate for the design. Since the secondary containments are located in vaults in the Pretreatment Building rather than directly buried, pressure gradients and vehicular traffic are not applicable load cases.
	The SC system has sufficient strength in the presence of operational stresses from site-specific conditions (i.e. traffic, heavy equipment, precipitation, frost).	Y	24590-WTP-DB-ENG-01-001, Rev. 0, Basis of Design; 24590-WTP-PER-CSA-02-001, Rev. 0, Secondary Containment Design; 24590-WTP-3PS-NLLR-T0002, Rev. 0, Engineering Specification for Furnishing, Detailing, Fabrication, Delivery and Installation of Stainless Steel Liner Plates.	Because the secondary containment is installed inside the pretreatment building, precipitation and frost are not applicable load cases. The procurement subcontract specification for furnishing the liner plates includes specific provisions for protection of completed liners during the construction process.
	FOUNDATION INTEGRITY			
	The SC is properly supported by a foundation or base in order to prevent failure from settlement, compression, or uplift, including the residual effects of installation	Y	24590-WTP-DB-ENG-01-001, Rev. 0, Basis of Design; 24590-WTP-PER-CSA-02-001, Rev. 0, Secondary Containment Design; 24590-WTP-DC-ST-01-001, Rev. 0, Structural Design Criteria.	These conditions are fully addressed in the reference design criteria documents. The design requirements and codes and standards specified are adequate to satisfy these requirements.
	The placement, structural support, and type of material used for backfill around and below the SC are appropriate.	Y	24590-BOF-3PS-CE01-T0001, Rev. 2, Engineering Specification for Excavation and Backfill; 24590-BOF-3PS-C000-T0001, Rev. 1, Technical Specification for Material Testing Services.	The Excavation and Backfill and Material Testing specifications contain current adequate industry standards for selecting and testing fill materials, placing and compacting backfills, and testing after each lift to assure adequate compaction. Requirements for testing and record keeping are current and adequate for both safety grade fills and commercial grade fills.

24590-CN-HCH-HXYG-00138-01-01 DO 718002

	Information Assessed	Y/N	Source of Information	Assessment
	LINER SYSTEM			
Secondary Containment	Designed to contain 100% of the capacity of the largest tank within its boundary.	Y	24590-WTP-DB-ENG-01-001, Rev. 0 Basis of Design.	This requirement is specified the Environmental section of the Basis of Design document. Reference materials furnished for the review are general design requirements, design and contract specifications and preliminary drawings that reflect the design intent. The draft WTP operating permit indicates the design will meet this requirement.
	The design or operation (e.g. diking & curbing) prevents run-on or infiltration of precipitation into the SC system unless the collection system has sufficient excess capacity (25 yr rainfall) to contain the run-on or precipitation.	Y	24590-WTP-DB-ENG-01-001, Rev. 0 Basis of Design. WTP Draft Operating Permit # WA 7890008967.	This requirement is specified in the Environmental section of the Basis of Design document. In addition, all secondary containments for tanks being reviewed are located in the interiors of the Pretreatment, Low-Activity Waste Vitrification and High-Level Waste Vitrification buildings.
	The design includes an external moisture barrier or other means to prevent moisture from entering the vault.	Y	24590 PTF P1 P01T P0006, Rev. 0, PRETREATMENT FACILITY GENERAL ARRANGEMENT PLAN AT EL (-)45'-0"; 24590 PTF P1 P01T P0009, Rev. 0, PRETREATMENT FACILITY GENERAL ARRANGEMENT SECTION C-C; 24590-WTP-DB-ENG-01-001, Rev. 0, Basis of Design.	The tanks and vaults shown on the general arrangement plan at elevation (-) 45'-0" lie below the Pretreatment Building which shields them from surface water percolation. Presumably, the Pretreatment Building will have provisions for control of rainwater runoff consistent with the Hanford Site State Waste Discharge Permit Number ST 4510 discussed in the Basis of Design document. The ground water table is located about 200 feet below the floor of the vault at elevation (-) 45'-0" as noted above.
	The containment area is free of cracks or gaps and the design discusses methods of their minimization (e.g. waterstops, installation practices).	Y	Prime Subcontract 24590-QL-SRA-MTF5-00001, Rev. 1, Service Requisition - 4 Pack/SS Liner Plate; 24590-WTP-3PS-NLLR-T0002, Rev. 0, Engineering Specification for Furnishing, Detailing, Fabrication, Delivery and Installation of Stainless Steel Liner Plates; 24590-WTP-3PS-SS00-T0002, Rev. 1, Specification for Welding of Structural Stainless Steel and Welding of Structural Carbon Steel to Structural Stainless Steel ; 24590-WTP-PER-CSA-02-001, Rev. 0, Secondary Containment Design.	Both the Secondary Containment Design documentation and the Prime Subcontract documentation provide current adequate requirements and codes and standards to provide leak tight stainless steel liners for secondary containment. Construction processes are adequately described and appropriate for installation of the liners. Standard details shown in the Secondary Containment Design package are consistent with the Prime Subcontract for the S/S liners.
	The design has considered the compatibility of the concrete liner or coatings and waste and presents information on coatings planning to be used from the manufacturer addressing compatibilities with the stored waste. The lining or coating must prevent the waste from migrating into the concrete.	Y	24590-WTP-PER-M-02-001, Rev. 0, Material Selections for Building Secondary Containment/Leak Detection; 24590-PTF-M6-PWD-00012, Rev. B, P&ID - PTF Plant Wash & Disposal System C5/R5 Process Cell Sumps (Q)	The Material Selection Study contains general information on the compatibility of planned stainless steel liners and protective coatings with the secondary containment concrete. Based on the P&ID for PWD-SUMP-00040 the liner in the (-) 45'-0" elevation cells is stainless steel. See the first item under the heading COMPATIBILITY & STRENGTH for additional assessment information.
	The seals (e.g. waterstops) used in the joints are compatible with the waste.	N/A	Not Applicable	The (-) 45'-0" elevation secondary containments are lined with stainless steel. Waterstops are not required.

24590-CM-HCH-HXX6 - 00138-01-01

RECEIVED

JUL 08 2002

BNI-Subcontracts

COGEMA ENGINEERING

July 8, 2002

COGEMA-02-0280

RPP-WTP
RECEIVED
JUL 08 2002
BY PDC

M. T. Rogers
Bechtel National, Inc. MS9-B
Waste Treatment Plant
3000 George Washington Way
Richland, Washington 99352

Dear Mr. Rogers:

STRUCTURAL INTEGRITY ASSESSMENT OF THE PRETREATMENT SECONDARY CONTAINMENT ELEVATION -45' -0" DESIGN PACKAGE FOR THE WASTE TREATMENT AND IMMOBILIZATION PLANT.

The subject integrity assessment has been completed per the contract requirements and is attached for your use and comment. The assessment found the design intent is sufficient to ensure the foundation and secondary containment will be adequately designed and that the foundation and secondary containment will have sufficient structural strength, compatibility with the waste(s) to be stored or treated, and corrosion protection to ensure that it will not collapse, rupture, or fail.

If you have any questions, please contact me at (509) 376-5445, or via facsimile at (509) 372-0504.

Sincerely,

K V Scott

K. V. Scott, Manager
Facilities, Structures & Components

kld

Attachment

cc: D. C. Pfluger MS4-E2 w/ attachment

DD 7/8/02

HXYG

24590-CM-HC4-HXG-00138-01-01

2425 Stevens Center Place, Second Floor, Richland, Washington 99352 Tel: (509) 372-3572 - Fax: (509) 372-3169
COGEMA Engineering Corporation

Bechtel National, Inc.

Job No. 24590

SUPPLIER DOCUMENT STATUS

1.	**Work may proceed.**
2.	**Revise and resubmit. Work may proceed subject to resolution of indicated comments.**
3.	**Revise and resubmit. Work may not proceed.**
4.	**Review not required. Work may proceed.**

Permission to proceed does not constitute acceptance or approval of design details, calculations, analyses, test methods, or materials developed or selected by the supplier and does not relieve supplier from full compliance with contractual obligations.

REVIEWED										ENS

G-321 Document Category N/A
[From Supplement A to G-321 (E) or G-321-V (V), as applicable, or "N/A" if SSRS is used]

Supersedes BNI Document No. N/A Rev. _____
[When applicable]

Accepted by Dan Pfluger (Print Name) DC Pfluger (Signature) 8/14/03 (Date)

Released by _____ (Print Name) _____ (Signature) _____ (Date)
[When applicable]

416 GP&S 6-03

24590-CM-HC4-HXYG-00138-01-15
REV. 00A

SUBCONTRACT SUBMITTAL

8/14/03 8/14/03

(B) ☒ Processed/ Data Entry ☒ Copied/ QA ☐ Scanned ☐ Filed

(A) KU 8/14/03

(C) fmp 8/14/03

RPP-WTP
RECEIVED
AUG 1 4 2003
BY PDC

R10111558

STRUCTURAL INTEGRITY ASSESSMENT OF THE PRETREATMENT FACILITY BELOW GRADE PLANT WASH AND DISPOSAL WASTE TREATMENT PLANT TRANSFER LINES, SECONDARY CONTAINMENT, ANCILLARY EQUIPMENT, AND CORROSION ASSESSMENT

COGEMA-IA-015
REV. 0

8/14/03 8/14/03
(B) Processed/ Data Entry Copied/ QA Scanned Filed
(A) KJ 8/14/03
(C) KJ 8/14/03

Please note that source, special nuclear and byproduct materials, as defined in the Atomic Energy Act of 1954 (AEA), are regulated at the U.S. Department of Energy (DOE) facilities exclusively by DOE acting pursuant to its AEA authority. DOE asserts, that pursuant to the AEA, it has sole and exclusive responsibility and authority to regulate source, special nuclear, and byproduct materials at DOE-owned nuclear facilities. Information contained herein on radionuclides is provided for process description purposes only.

24590-CM-HC4-HXYG-00138-01-15 Rev 00A

Scope	Scope of this Integrity Assessment	This integrity assessment addresses the Pretreatment Facility Below Grade Plant Wash & Disposal System Transfer Lines. It considers the ancillary equipment, secondary containment, and the corrosion assessment for each of these transfer lines. These lines are the direct buried double-walled pipe transfer lines that terminate in the Waste Treatment Plant (WTP) Pretreatment Facility (PTF). These transfer lines are associated with several process systems. They include: Waste Feed Receipt Process System transfer lines from the Tank Farm/WTP Contractor Interface to the PTF (FRP-PZ-01749-W62F-03, FRP-PZ-01750-W62F-03 and FRP-PZ-01751-W62F-03); High Level Waste (HLW) Lag Storage and Feed Blending System feed transfer lines from the PTF to the HLW Vitrification Facility (HLP-PC-00036-S32B-03, HLP-PC-00037-S32B-03, HLP-PC-00038-S32B-03 and HLP-PC-00039-32B-03); Treated Low Activity Waste (LAW) Concentrate Storage Process System transfer lines from the PTF to the LAW Vitrification Facility (TCP-PH-00117-S32B-03, TCP-PH-00118-S32B-03 and TCP-PH-00119-S32B-03); Radioactive Liquid Waste Disposal System transfer lines from the HLW Vitrification Facility to the PTF (RLD-ZH-00050-W31A-03, RLD-ZH-00051-W31A-03, RLD-ZH-00052-W31A-03 and RLD-ZF-03396-W31A-03); Radioactive Liquid Waste Disposal System transfer lines from the LAW Vitrification Facility to the PTF (RLD-ZS-03385-W31A-03 and RLD-ZF-02176-W31A-03); LAW Secondary Offgas/Vessel Vent Process System transfer lines from the LAW Vitrification Facility to the PTF (LVP-ZY-00127-W31A-03 and LVP-ZY-00128-W31A-03); and a Radioactive Liquid Waste Disposal System transfer line from the Laboratory to the PTF (RLD-ZN-02993-W31A-03). **Independent Corrosion Expert (ICE) Report:** Attachment A, Corrosion Integrity Assessment of Waste Transfer Pipelines in the Hanford Waste Treatment Plant, Corrosion Control Specialists, Kent, Washington, Dennis P. Helgeson, P.E., 4 pages, 08/11/03. Attachment B, Buried Pipeline and Ancillary Equipment vs Soil Environment Compatibility Report, Ibid., 6 pages, 08//11/03.
References	Drawings	24590-PTF-M6-PWD-P0057, Rev. 0, P&ID PLANT WASH & DISPOSAL SYSTEM UNDERGROUND TRANSFER LINES (Q); 24590-PTF-M6-PWD-P0058, Rev. 0, P&ID-PTF PLANT WASH & DISPOSAL SYSTEM UNDERGROUND TRANSFER LINES (Q); 24590-PTF-M6-PWD-P0002, Rev. 1, P&ID-PTF PLANT WASH & DISPOSAL SYSTEM EFFLUENT COLLECTION PWD-VSL-00033/00043/00044 (Q); 24590-WTP-M6-50-P0001, Rev. 0, P&ID SYMBOLS AND LEGEND SHEET 1 OF 6; 24590-WTP-M6-50-P0002, Rev. 0, P&ID SYMBOLS AND LEGEND SHEET 2 OF 6; 24590-WTP-M6-50-P0003, Rev. 0, P&ID SYMBOLS AND LEGEND SHEET 3 OF 6; 24590-WTP-M6-50-P0004, Rev. 0, P&ID SYMBOLS AND LEGEND SHEET 4 OF 6; 24590-WTP-M6-50-P0005, Rev. 0, P&ID SYMBOLS AND LEGEND SHEET 5 OF 6;

Summary of Assessment: For each item of "Information Assessed" (i.e., Criteria) on the following pages, the items listed under "Source of Information" were reviewed and found to furnish adequate design controls and requirements to assure the design intent fully satisfies the WAC requirements.

	Information assessed	Source of Information	Discussion
Design	Ancillary equipment design standards are appropriate and adequate for the equipment's intended use.	24590-WTP-DC-PS-01-001, Rev 1, Pipe Stress Design Criteria; 24590-WTP-PER-PL-02-001, Rev. 2, Piping Material Class Description; 24590-WTP-3PS-PS02-T0001, Rev. 2, Engineering Specification for Shop Fabrication of Piping; 24590-WTP-3PN-PS-02-00008, Specification Change Notice to 24590-WTP-3PS-PS02-T0001, Rev. 2; 24590-PTF-M6-PWD-P0057, Rev. 0, P&ID Plant Wash and Disposal System Underground Transfer Lines (Q); 24590-PTF-M6-PWD-P0058, Rev. 0, P&ID Plant Wash and Disposal System Underground Transfer Lines (Q)	The Pipe Stress Design Criteria document identifies American Society of Mechanical Engineers (ASME) B31.3 Process Piping as the design code for both safety grade and commercial grade piping systems of the WTP. To satisfy more stringent seismic requirements, the design criteria includes methodology provided in the ASME Boiler & Pressure Vessel Code, Section III Rules for Construction of Nuclear Facility Components (ASME Section III) to supplement the design rules of ASME B31.3 code for analysis and design of safety grade piping. The Piping Material Class Description document identifies the design conditions including limiting pressure and temperature service conditions and the corrosion/erosion allowance for each Piping Material Class, the piping material and wall thickness, and the appropriate design code(s). The description for each class identifies the ancillary equipment requirements for pipe, fittings, flanges, valves, and gaskets for the service conditions in which they will be employed. The Material Classes for the transfer lines being considered are W62F, S32B, and W31A. All of the transfer lines considered here are double-walled pipe containing a 3 in. nominal pipe size stainless steel carrier pipe inside a 6 in. nominal pipe size carbon steel seamless encasement pipe. The transfer lines are identified on the P&ID drawings as Quality Level (QL-1) and Seismic Category (SC-1). These codes and standards are acceptable and adequate for the design of the double-walled transfer lines.
	If the ancillary equipment to be used is not built to a design standard, the design calculations demonstrate sound engineering principles of construction.	24590-WTP-DC-PS-01-001, Rev 1, Pipe Stress Design Criteria;	This item is Not Applicable because the ancillary equipment piping is to be designed in accordance with ASME B31.3 for all applicable load conditions and load combinations as noted above.

Best Available Copy

	Information assessed	Source of Information	Discussion
Design	Ancillary equipment has adequate strength at the end of its design life to withstand the operating pressure, operating temperature, thermal expansion or contraction, and seismic loads. Equipment is protected against physical damage and excessive stress due to settlement or vibration.	24590-WTP-DC-PS-01-001, Rev 1, Pipe Stress Design Criteria; 24590-WTP-PER-M-02-002, Rev 0, Materials for Ancillary Equipment 24590-WTP-PER-PL-02-001, Rev. 2, Piping Material Class Description; ME101, Linear Elastic Analysis of Piping, Version N6 software, Bechtel Corporation, Computer Services Library, 50 Beale St., San Francisco, California; 24590-WTP-VV-PS-01-001, Rev 1, Verification and Validation Report for ME101, Linear Elastic Analysis of Piping Version N6	The Pipe Stress Design Criteria document specifies the ASME B31.3 code to address operating pressure, operating temperature, thermal expansion/contraction, settlement or support displacements, corrosion, and vibration and seismic loads. Elements of the ASME B&PV Code, Section III (Subsection NC and Appendices F and N) are used to supplement the requirements of ASME B31.3 for seismic design of Seismic Category (SC-I/II) ancillary equipment. Details of the seismic design methods are discussed in the Pipe Stress Design Criteria document. The ME101Linear Elastic Analysis of Piping program is used for static and dynamic design analysis for the more complex ancillary equipment such as the underground transfer lines. The program has been verified and validated. The Piping Material Class Description document provides enveloping values for design pressure and temperature limits for the primary carrier pipes and the secondary encasement pipes for each pipe class. A bounding corrosion/erosion allowance is furnished for the primary pipe for each class. These codes and standards are adequate and appropriate to assure that the ancillary equipment has adequate strength at the end of design life.

Best Available Copy

	Information assessed	Source of Information	Discussion
Equipment Supports	Ancillary equipment supports are adequately designed.	24590-WTP-PER-PS-02-001, Rev. 3, Ancillary Equipment Pipe Support Design; 24590-WTP-DC-PS-01-001, Rev 1, Pipe Stress Design Criteria; ME101, Linear Elastic Analysis of Piping, Version N6 software, Bechtel Corporation, Computer Services Library, 50 Beale St., San Francisco, California; 24590-WTP-VV-PS-01-001, Rev 1, Verification and Validation Report for ME101, Linear Elastic Analysis of Piping Version N6	Pipe supports for the primary transfer line inside the secondary containment pipe consist of small support plates and spacers installed between the exterior surface of the primary pipe and the inside surface of the secondary containment pipe. A standard set of typical details is provided in the Ancillary Equipment Pipe Support Design document. An adequate set of horizontal supports, guides, and pipe anchor typical details is furnished to the fabricator to allow production of the spools. Additional details are furnished for closure of encasements at field connections, installation of insulation with an outer wrapping and elbow assemblies. The final design evaluations for the pipe-in-pipe transfer lines will be accomplished with ME101 models that represent the primary and secondary pipes, internal supports, guides and anchors, the surrounding soil, and the final line routings (geometries). The Pipe Stress Design Criteria document is organized around the design requirements of ASME B31.3 Process Piping supplemented by ASME Section III, Division 1, Subsection NC and Appendices F and N requirements for seismic design analysis. For safety grade supports, design allowable stresses are based on allowables for normal loads as defined in ASME Section III, Division I. Analysis is by manual calculation or approved computer programs. These codes and standards are appropriate and adequate for mixed waste transfer lines over the range of conditions identified for these systems. Use of approved and validated computer programs to analyze piping designs is appropriate.

Best Available Copy

	Information assessed	Source of Information	Discussion
Connections	Seams and connections are adequately designed.	24590-WTP-PER-PS-02-001, Rev. 3, Ancillary Equipment Pipe Support Design; 24590-WTP-3PS-PS02-T0001, Rev. 2, Engineering Specification for Shop Fabrication of Piping; 24590-WTP-3PN-PS-02-00008, Specification Change Notice to 24590-WTP-3PS-PS02-T0001, Rev. 2	The Engineering Specification for Shop Fabrication of Piping shows that the double-walled transfer lines use welded butt joints for all connections. The transfer lines are Quality Level 1 (QL-1). Welding requirements are in accordance with ASME B31.3. Welder qualifications are in accordance with the ASME Boiler and Pressure Vessel Code (B&PV) Section IX, Welding and Brazing Qualifications. Nondestructive examinations are to be conducted in accordance with ASME B&PV Section V as specified in the Engineering Specification for Shop Fabrication of Piping, Appendix A. The Ancillary Equipment Pipe Support Design document shows examples of standard assemblies for the transfer lines and encasements. These are adequate and appropriate design and fabrication codes and standards for the ancillary equipment being evaluated.
Frost Heave	The system will withstand the effects of frost heave.	24590-WTP-DC-ST-01-001, Rev. 1, Structural Design Criteria; 24590-WTP-DB-ENG-01-001, Rev. 0, Basis of Design	The Structural Design Criteria identifies the frost line as being 30 in. below grade. The Civil, Structural, Architectural Basis of Design section requires that all underground pipes be installed with the top of pipe at least 30 in. below grade so that the pipes are not subject to frost heave.
Waste Characteristics	Characteristics of the waste to be stored or treated have been identified (ignitable, reactive, toxic, specific gravity, vapor pressure, flash point, temperature)	24590-WTP-PSAR-ESH-01-002-02, Rev. 0a, Preliminary Safety Analysis Report to Support Construction Authorization; PT Facility Specific Information; 24590-WTP-DB-ENG-01-001, Rev. 0, Basis of Design; 24590-PTF-PER-M-02-003, Rev. 1, Underground Pipe Protection; 24590-WTP-PER-PL-02-001, Rev. 2, Piping Material Class Description	Chapter 4 of the Preliminary Safety Analysis Report identifies the Important to Safety functions for the waste transfer lines. They are listed as maintaining structural integrity for their design life while resisting a high radiation environment, corrosive effects of the process streams, and the erosive nature of the suspended solids. In addition, the waste transfer lines must maintain structural integrity during and after a seismic event. The Underground Pipe Protection document and the Piping Material Class Description document provide the basis for the corrosion/erosion allowances and list the allowances for each pipe class. Flammable gas is not identified as a concern for the waste transfer lines. Transfer lines originating or terminating in source or downstream receiving tanks typically include a dip tube that terminates below the surface of the low level heel in each tank. The dip tubes isolate the lines from any potential flammable gas buildup in the tank vapor spaces. The Basis of Design document requires a facility wide grounding system to be in place, including process equipment, to control ignition sources. The design has included adequate and appropriate features to address the waste characteristics including pressure, temperature, corrosion, erosion and control of potential flammable gases in ancillary equipment.

Best Available Copy

	Information assessed	Source of Information	Discussion
Waste Characteristics	Ancillary equipment is designed to handle the wastes with the characteristics defined above and any treatment reagents.	24590-WTP-DB-ENG-01-001, Rev. 0, Basis of Design; 24590-PTF-PER-M-02-003, Rev. 1, Underground Pipe Protection	The Basis of Design requires that dangerous waste tank systems meet the requirements of WAC 173-303-640. The Underground Pipe Protection document discusses the rationale for material selection for the underground transfer lines. The primary lines from the Hanford Tank Farms are 304L stainless steel because they are used to transfer alkaline wastes to the WTP. The intraplant transfer lines in the WTP use primary lines of 316L stainless steel to provide for transferring less alkaline solutions. The primary pipelines will be flushed with inhibited water after each use for corrosion control. Carbon steel was selected for the secondary encasement lines. During normal operations, the annulus between the exterior of the primary pipelines and the interior of the encasement lines remains dry which limits corrosion. The carbon steel encasement lines have sufficient wall thickness to resist internal corrosion from a waste leak for a period of time adequate to detect the leak and allow for flushing of the secondary line. The exteriors of the secondary encasements for the intraplant transfer lines are protected with a cathodic protection system. The exteriors of the secondary encasements for the transfer lines from the Hanford Tank Farms are enclosed in closed-cell bonded foam insulation with a waterproof outer jacket of High Density Polyethylene to prevent exterior corrosion.

Best Available Copy

	Information assessed	Source of Information	Discussion
Waste Characteristics	The pH range of the waste, waste temperature, and the corrosion behavior of the structural materials are adequately addressed. Ancillary equipment material and protective coatings ensure the ancillary equipment structure is adequately protected from the corrosive effects of the waste stream and external environments. The protection is sufficient to ensure the equipment will not leak or fail for the design life of the system.	See drawings listed above; 24590-PTF-PER-M-02-003, Rev. 1, Underground Pipe Protection; 24590-WTP-3YD-CPE-00001, Rev. C, System Description for Cathodic Protection; 24590-WTP-3PS-EQ00-T0002, Rev. 2, Engineering Specification for Cathodic Protection; Specification No. 24590-WTP-3PS-PX04-T0004, Rev. 0, Engineering Specification for Epoxy Coating of Stainless Steel Items that are Buried, Embedded or Insulated; Specification No. 24590-WTP-3PS-PX04-T0001, Rev. 0, Engineering Specification for Shop Applied Fusion Bonded Epoxy Coating for Underground Carbon Steel Pipe; Requisition Number: 24590-QL-MRA-PSO2-00008, Rev. 2, SECTION 2 - TECHNICAL SPECIFICATIONS	The Underground Pipe Protection report identifies that two grades of stainless steel have been selected for the underground transfer lines. The primary transfer lines from the Hanford Tank Farms are 304L stainless steel because they are used to transfer alkaline wastes to the WTP. The intraplant transfer lines in the WTP use primary lines of 316L stainless steel to provide for transferring less alkaline solutions. All primary transfer lines are to be flushed with inhibited water after each use. Secondary encasement lines are designed to be sufficiently internally corrosion resistant to provide leak protection from the time a primary leak starts until the leak has been detected and the transfer line has been isolated. The soil side of the secondary encasement lines is to be protected with cathodic protection in accordance with National Association of Corrosion Engineers (NACE) International Recommended Practices (except for the Waste Feed Receipt Process System transfer lines). A System Description document identifies the overall scope of the WTP Cathodic Protection System that will be applied to the waste transfer lines. Detailed specifications for design and construction are furnished in the Engineering Specification for Cathodic Protection. Transfer lines evaluated in this integrity assessment have carbon steel secondary encasements. An impressed current cathodic protection system is to be used to protect these secondaries from corrosion where they are buried. The specification for "Shop Applied Fusion Bonded Epoxy Coating" describes the epoxy coating that will be applied to the outside of the transfer lines to control current flow in the cathodic protection system. Consideration was given to service life and cumulative anticipated radiation exposure of candidate epoxy coatings during development of the specifications. The Waste Feed Receipt Process (FRP) System waste transfer lines are furnished with additional external corrosion protection by adding an external waterproof barrier to the lines in lieu of cathodic protection. This barrier consists of a 2 in. layer of sprayed or injected closed-cell polyurethane foam with an external jacket of extruded high density polyethylene (HDPE) pipe with a minimum thickness of 150 mils. The Technical Notes in the Material Requisition (MRA) require the foam to be fully bonded to the epoxy coating on the outside of the encasement pipe and fully bonded to the inside of the HDPE jacket. Independent Corrosion Expert (ICE) Report: The corrosion protection provisions for the transfer lines considered in this Integrity Assessment have been reviewed by an ICE, Mr. Dennis Helgeson, P.E. His reports are included as attachment A and B to this assessment.

Best Available Copy

	Information assessed	Source of Information	Discussion
Corrosion Allowance	Corrosion allowance is adequate for the intended service life of the ancillary equipment.	24590-WTP-DB-ENG-01-001, Rev. 0, Basis of Design; 24590-WTP-DC-PS-01-001, Rev 1, Pipe Stress Design Criteria; 24590-PTF-PER-M-02-003, Rev. 1, Underground Pipe Protection; 24590-WTP-PER-PL-02-001, Rev. 2, Piping Material Class Description	The required service life of 40 years for mechanical systems, e.g. piping, is identified in the Basis of Design. The Pipe Stress Design Criteria identifies ASME B31.3 as the design code for WTP piping. Consideration of corrosion, including corrosion allowance, is a mandatory requirement of ASME B31.3. The Underground Pipe Protection document identifies the choice of 304L and 316L stainless steel as conservative for the primary underground transfer lines which are free-draining, operated only periodically during transfers, and are flushed with inhibited water after each transfer. The corrosion/erosion allowances for underground transfer pipe classes S32B, W31A and W62F are listed in the Piping Material Class Description document.
Pressure Controls	Pressure controls (vents and relief valves) are adequately designed to ensure pressure relief if normal operating pressures in the tank are exceeded.	24590-WTP-DC-PS-01-001, Rev 1, Pipe Stress Design Criteria.	The Pipe Stress Design Criteria identifies ASME B31.3 as the design code for the ancillary equipment piping. ASME B31.3 requires provision be made to safely contain or relieve any pressure to which the piping may be subjected. ASME B31.3 piping not protected by a pressure relieving device, or that can be isolated from a pressure relieving device must be designed for at least the highest pressure that the system can develop. This requirement applies to the primary transfer lines. The transfer lines all terminate in dip tubes which are free-draining to the heels in the tanks. The maximum internal pressure is therefore limited by the design configuration.
	Maximum flows and any unusual operating stresses are identified	24590-PTF-M6-PWD-P0057, Rev. 0, P&ID Plant Wash and Disposal System Underground Transfer Lines (Q); 24590-PTF-M6-PWD-P0058, Rev. 0, P&ID Plant Wash and Disposal System Underground Transfer Lines (Q); 24590-WTP-PER-PL-02-001, Rev. 2, Piping Material Class Description	The expected flow paths for the ancillary equipment are identified on the reference P&ID drawings. As noted in the adjacent item above, ASME B31.3 requires piping to be designed to the highest pressure that a system can develop. The bounding maximum design temperature and pressure are listed for each piping material class in the Piping Material Class Description. ASME B31.3 and the associated standards are appropriate and adequate for the design of the transfer lines.

Best Available Copy

	Information assessed	Source of Information	Discussion
Foundations and Leak Detection	Ancillary equipment is designed with secondary containment that is constructed of materials compatible with the waste and of sufficient strength to prevent failure (pressure gradients, waste, climatic conditions, daily operations), provided with a leak-detection system, and designed to drain and remove liquids.	24590-PTF-PER-M-02-003, Rev. 1, Underground Pipe Protection; 24590-WTP-DC-PS-01-001, Rev 1, Pipe Stress Design Criteria; 24590-WTP-PER-J-02-002, Rev. 1, Low Point Leak Detection in Secondary Containment Systems for Buried Co-Axial Transfer Lines; 24590-PTF-M6-PWD-P0057, Rev. 0, P&ID Plant Wash and Disposal System Underground Transfer Lines (Q); 24590-PTF-M6-PWD-P0058, Rev. 0, P&ID Plant Wash and Disposal System Underground Transfer Lines (Q); 24590-BOF-3PS-C000-T0002, Rev. 0, Engineering Specification for Excavation and Backfill of Underground Radioactive Waste Transfer Lines; 24590-BOF-3PS-CE01-T0001, Rev. 4, Engineering Specification for Excavation and Backfill	The 6 in. diameter carbon steel secondary encasement pipes shown on the P&IDs must be designed to ASME B31.3 as noted in the Pipe Stress Design Criteria. ASME B31.3 requires piping to be designed for superimposed dead loads such as the soil overburden for the buried transfer lines and potential vehicular loads. The Underground Pipe Protection document identifies that the secondary containments have sufficient corrosion endurance to assure that the secondary lines will not leak for a time period sufficient to detect a leaking primary and isolate the transfer line from service. The Excavation and Backfill specifications have specific provisions for the use of controlled density fills for backfilling trench excavations for outside buried piping. They also address granular pipe bedding material that conforms to ASTM D 422 and a proviso that controlled density fill conforming to the ASTM is also acceptable. Installation instructions are provided for installing bedding material to line and grade with dimensional tolerances for minimum and maximum bedding material installation and appropriate lift and compaction requirements. The installation of bedding materials is coordinated with the backfill and compaction requirements for subgrade preparation for roads and paved areas. Testing Procedures and Record Keeping procedures are defined for quality control testing of bedding installation as each lift is placed. The fill and compaction requirements for the installation of underground transfer lines are appropriate and adequate to assure that the lines will perform as designed. The P&IDs show that each transfer line has a low point drain and leak detection to identify primary line leaks. Details of the leak detection system are discussed in the Low Point Leak Detection in Secondary Containment Systems for Buried Co-Axial Transfer Lines document. Flushing capabilities are provided at the high point end of each transfer line for removing leaked waste or accumulated liquid in the secondary lines by flushing to the low point drains.

Best Available Copy

ATTACHMENT A

CORROSION INTEGRITY ASSESSMENT OF WASTE TRANSFER PIPELINES IN THE HANFORD WASTE TREATMENT PLANT

Corrosion Control Specialist,
Dennis P. Helgeson, P.E.

(5 pages including coversheet)

C C S **Corrosion Control Specialists**

P.O. Box 5303
Kent, Washington 98064-5303
Phone (253) 520-3424 • Fax (253) 520-3425

CORROSION INTEGRITY ASSESSMENT OF

Waste Transfer Pipelines in the
Hanford Waste Treatment Plant
Owned/Operated by the U. S. Department of Energy
Office of River Protection, Richland Washington
per WAC 173-303-640(3)(a) through (g)

This corrosion certification is for the waste transfer pipelines at the Hanford Waste Treatment Plant Richland, Washington. The transfer pipelines included in this certification are shown on drawings 24590-PTF-M6-PWD-P0057 AND –P0058 with the exception of the two lines on hold (RLD-ZS-03382-F10A AND RLD-03383-F10A-03). This corrosion integrity assessment was conducted to identify components of the environment or the piping network that could lead to corrosion damage to the pipe that could lead to failure of the pipe. The assessment evaluated the corrosion protection measures taken to assure that they were correctly designed and compatible with the environment in which they are to operate. This assessment is provided as a subcontract from COGEMA Engineering. This assessment has considered:

A. CORROSION/CORROSION CONTROL STANDARDS, DESIGN STANDARDS AND ENGINEERING DOCUMENTS:

NFPA 70 - 1996	National Electrical Code (NEC)
NACE International RP-0169-1996	Recommended Practice. "Control of External Corrosion on Underground or Submerged Metallic Piping Systems"
WAC 173-303-640 - October 3, 2001"	Washington Administrative Code, Title 173, WAC Department of Ecology, Dangerous Waste Regulations for Tank Systems
NACE-RP-0274	High Voltage Electrical Inspection of Pipeline Coatings

Steel Structures Painting Council (SSPC)

SSPC-SPI	Solvent Cleaning
SSPC-SPIO	Near-White Blast Cleaning
SSPC-SP11	Power Tool Cleaning to Bare Metal
SSPC-VISI	Visual Standards for Abrasive Blast Cleaned Steel
SSPC-PA2	Measurement of Dry Paint Thickness with Magnetic Gauges

Bechtel Document 24590-WTP-DB-ENG-01-001, REV 0 – Basis for Design

NACE Publication Corrosion Data Survey compiled by Norman E. Hamner – Metals Section

B PLANT DESIGN DOCUMENTS REVIEWED IN PREPARATION OF THE ASSESSMENT

24590-BOF-3PS-CE01-T0001, Rev. 4	Engineering Spec for Excavation and Backfill
24590-WTP-PER-J-02-002, Rev. 1	Low-Point Leak Detection in Secondary Containment Systems for Buried Co-Axial Transfer Lines
24590-PTF-PER-M-02-003, Rev. 1	Underground Pipe Protection
24590-WTP-PER-PS-02-001, Rev. 3	Ancillary Equipment Pipe Support Design
24590-WTP-PER-PL-02-001, Rev 2	Piping Material Class Description
24590-WTP-3PS-NWP0-T0001, Rev.1	Engineering Specification for General Welding and NDE Requirements for Supplier Fabricated Piping _
24590-WTP-3PS-PB01-T0001, Rev. 0	Engineering Specification for Technical Supply Conditions for Pipe, Fittings, and Flanges
SCN NO. 24590-WTP-3PN-PB01-00001	Change Notice for the specification listed above
24590-WTP-3PS-PS02-T0001, Rev. 2	Engineering Specification for Shop Fabrication of Piping
SCN NO. 24590-WTP-3PN-PS-02-00008	Change Notice for the specification listed above
24590-WTP-3PS-PS02-T0002, Rev. 1	Engineering Specification for Cold Bending of Pipe
SCN NO. 24590-WTP-3PN-PS02-00010	Change Notice for the specification listed above
24590-WTP-3PS-PX04-TP001, Rev. 0	Specification for Shop Applied Fusion Bonded Epoxy Coating for Underground Carbon Steel Pipe
24590-WTP-3PS-PX04-T0004, Rev. 0	Engineering Specification for Epoxy Coating of Stainless Steel Items that Are Buried, Embedded or Insulated
24590-WTP-3PS-G000-T0001, Rev. 0	General Specification for Supplier Quality Assurance Program Requirements
24590-WTP-3PS-EQ00-T0002, Rev. 2	Engineering Specification for Cathodic Protection
24590-WTP-3YD-CPE-00001, Rev. C	System Description for Cathodic Protection
WTSC99-1036-42-17	RPP-WTP Geo-technical Investigation Final Report, Shannon & Wilson, 2000
24590-PTF-M6-PWD-P0057, Rev. 0	P&ID Plant Wash & Disposal System Underground Transfer Lines (Q)
24590-PTF-M6-PWD-P0058, Rev. 0	P&ID Plant Wash & Disposal System Underground Transfer Lines (Q)
24590-PTF-3YD-PWD-00001, Rev. 0	System Description for Plant Wash and Disposal System PWD and Radioactive Liquid Waste Disposal System RLD
24590-WTP-3PS-DB01-T0001, Rev. 6	Engineering specification for Furnishing and delivering Ready Mix Concrete
24590-BOF-3PS-C000-T0002, Rev. 0	Engineering Specification for Excavation and Backfill of Underground Radioactive Waste Transfer Lines
24590-PTF-M6-PWD-P0002, Rev. 1	P&ID Plant Wash & Disposal System Effluent Collection System PWD-VSL-00033/00043/00044
24590-BOF-C2-C12T-00002, Rev. 3	RPP-WTP General Arrangement Plan
24590-PTF-P1-P01T-P0011, Rev. 3	Pretreatment Facility General Arrangement Section E-E
24590-PTF-P1-P01T-P0008, Rev. 2	Pretreatment Facility General Arrangement Section B-B

C. CHARACTERISTICS OF THE SOILS SURROUNDING THE PIPELINES AND THE RATES OF CORROSION THAT MIGHT BE EXPECTED

See "Buried Pipeline and Ancillary Equipment vs. Soil Environment Compatibility Report for Buried Pipelines at River Protection Project – Waste Treatment Plant dated August 11, 2003 attached.

D. PLANNED CORROSION PROTECTION MEASURES:

1 Impressed current cathodic protection

2 Fusion bonded epoxy coating

3. Corrosion allowance included in pipe material specification.

OR

1 Isolation of the steel pipe from contact with the soil

2 Corrosion allowance included in pipe material specification.

E: COMMENTS:

COGEMA Engineering has provided all documents requested in completing this assessment. COGEMA personnel interviewed were fully responsive to all inquires about the subject pipelines, their operation, or the soil environment into which they are to be placed. Notwithstanding the statements or information contained herein, this assessment conducted by Corrosion Control Specialists is based on that data and information supplied by COGEMA.

F CERTIFICATION LIMITATIONS;

This certification is only for the identified pipe material, coating, and cathodic protection specified in the design documents reviewed. If the materials of construction change or if the planned operation or use is changed or if a significant structural change is made, a new assessment certification is required.

CORROSION INTEGRITY ASSESSMENT CERTIFICATION

I, Dennis Helgeson have reviewed, and certified a portion of a design of a new tank system or component located at the Hanford Waste Treatment Plant, owned/operated by the U. S. Department of Energy, Office of River Protection, Richland Washington. My duties, as an independent corrosion expert, were to review the design for the waste transfer piping inside the plant to determine if it was compatible with the soils at the site and would not fail as a result of corrosion damage, as required by the Dangerous Waste Regulations, namely, WAC 173-303-640(3) (a).

I certify under penalty of law that I have personally examined and am familiar with the information submitted in this document and all attachments and that, based on my inquiry of those individuals immediately responsible for obtaining the information, I believe that the information is true, accurate, and complete. I am aware that there are significant penalties for submitting false information, including the possibility of fine and imprisonment.

The undersigned is a registered professional engineer in the state of Washington.

Signature: Dennis R Helgen Date: 8/11/03

Company: Corrosion Control Specialists
P. O. Box 5303
Kent, WA 98064

Telephone: (253) 520-3424 Fax: (253) 520-3425

DENNIS R. HELGES
STATE OF WASHINGTON
8231
REGISTERED
PROFESSIONAL ENGINEER
EXPIRES 12/24/04

ATTACHMENT B

BURIED PIPELINE AND ANCILLARY EQUIPMENT vs. SOIL ENVIRONMENT COMPATIBILITY REPORT

Corrosion Control Specialist,
Dennis P. Helgeson, P.E.

(7 pages including coversheet)

CCS **Corrosion Control Specialists**

P.O. Box 5303
Kent, Washington 98064-5303
Phone (253) 520-3424 • Fax (253) 520-3425

BURIED PIPELINE AND ANCILLARY EQUIPMENT VS SOIL ENVIRONMENT COMPATIBILITY REPORT

for the
River Protection Project - Waste Treatment Plant
Hanford, Washington

The U.S. Department of Energy (DOE) plans to construct a dangerous waste Waste Treatment Plant (WTP) at their Hanford, Washington facility. Construction of the plant is part of the DOE River Protection Project. Mixed waste will be received, pretreated, and vitrified in three primary waste treatment facilities. Waste will be transferred into the WTP, between WTP waste treatment facilities, and out of the WTP in buried piping. That transfer piping is the subject of this compatibility report. This report addresses only pipelines that will have active cathodic protection.

This report is being prepared to assure compliance with the state of Washington Department of Ecology regulation described in WAC 173-303-640(3) and its guidance 94-114.

Pipeline Design

The buried transfer piping for the WTP will be a sloped coaxial system. The coaxial system for transfer of the waste is made up of a carrier pipe made of 316L stainless steel to contain the waste. That carrier pipe will run inside an encasement pipe that is made of carbon steel. The encasement pipe is a secondary containment system in the event of a leak from the carrier pipe. The encasement pipe also isolates the carrier pipe from corrosion by the surrounding soils. The encasement pipes are to be 6-inch diameter Schedule 40 carbon steel. The pipe will have a nominal wall thickness of 0.280 inches. A leak detection system is incorporated into the pipeline design to provide an alarm in the event of a leak. The exterior of the encasement pipe is to be coated with a factory applied fusion bonded epoxy (FBE). The FBE is a primary method of corrosion control by isolating the pipe from contact with the soil. Specifications for the coating and its application are described in Bechtel documents 24590-WTP-3PS-PX04-T0001, Rev 0 and 24590-WTP-3PS-PX04-T0004, Rev 0. The specification for the WTP recognizes that the FBE may not be 100 percent effective and calls for the installation of cathodic protection to

supplement it. Details of the Bechtel's plan for cathodic protection are described in their documents 24590-WTP-3PS-EQ00-T0002, Rev 2 and 24590-WTP-3YD-CPE-00001, Rev C.

The drawings 24590-PTF-M6-PWD-P0057 and –P0058 identify the transfer pipelines that are the subject of this report. All of the pipelines shown on these drawings are within the scope of this report with the exception of the two lines on hold (RLD-ZS-03383-F10-03 and RLD-ZS-03382-F10A-04) which are the effluent lines from the Waste Treatment Plant to the Hanford site disposal facilities, the LERF and ETF facilities. Also the three transfer lines from the Hanford Tank Farms to the Pretreatment Facility (FRP-PZ-01749-W62F-03, FRP-PZ-01750-W62F-03, and FRP-PZ-01751-W62F-03) are excluded from the cathodic protection engineering specification, and are therefore not the subjects of cathodic protection discussed in this report. This report considers the metallic pipe that makes up the transfer piping at the WTP. It does not address any FRP piping nor does it address any steel piping that is isolated from the soil environment by encasement in high-density polyethylene pipe.

The compatibility of the carrier pipe with the wastes being transferred inside it is not the subject of this report. That compatibility is the responsibility of others. Any corrosion that might occur in the annular air space between the carrier pipe and the encasement pipe should be minimal to nil but that compatibility evaluation is also the responsibility of others.

This report is to evaluate if the FBE coating and cathodic protection system make the encasement pipe compatible with the soils at the site.

A detailed description of the make up of the piping network at the WTP is described in the following Bechtel documents:

24590-BOF-3PS-CE0I-T0001, Rev. 4
24590-WTP-PER-J-02-002, Rev. 1
24590-PTF-PER-M-02-003, Rev. 1
24590-WTP-PER-PL-02-001, Rev. 2
24590-WTP-3PS-NWP0-T0001, Rev. 1
24590-WTP-3PS-PB01-T0001, Rev. 0
24590-WTP-3PS-PS02-T0001, Rev. 2
24590-WTP-3PS-PS02-T0002, Rev. 1
24590-WTP-3PS-G000-TP002, Rev. 1

Soil Environment

To evaluate the relative corrosion performance of different soils a number of properties of the soil are evaluated. The principal properties evaluated are outlined in WAC 173-303–640(3)(a)(iii)(A)(I-VIII) to include:

(I) Soil moisture content
(II) Soil pH
(III) Soil sulfides level

(IV) Soil resistivity
(V) Structure to Soil Potentials
(VI) Influence of nearby underground metallic structures
(VII) Existence of stray electric currents
(VIII) Existing corrosion protection methods

The moisture content of soils at the WTP site varies seasonally between 2-4 %. The pH of the soils recently measured at the site ranged from 5.84 to 7.94 with an average of 6.88. Sulfates and chlorides measured at the site were below detectable limits or below any threshold that would impact corrosion of carbon steel. In-situ soil resistivity ranged from 14,300 to 143,000 ohm-cm with an average of 61,300 ohm-cm. Laboratory testing indicated resistivity between 61,000 and over a million ohm-cm. In as much as this is a planned facility no structure to soil potentials have been recorded. The site for the WTP is near the 200 East area and evaluation of the nearby buried tanks are a consideration as well as any stray current that might result from cathodic protection of those tanks. Interaction between cathodic protection systems in the 200 East Area and cathodic protection systems at the WTP site would be a design consideration for waste transfer lines routed between the sites. A summary of all the soil properties is tabulated and discussed in the Shannon & Wilson Report WTSC99-1036-42-17.

Other Corrosion Considerations

The corrosion of steel in soils is an electrochemical process and not just chemical interaction of the soil with the metal. The electrochemical theory is that four elements are necessary for corrosion to occur. The four elements are anodes on the metal surface, cathodes on the metal surface, a metallic path between the anode and cathode (the metal itself) and an electrolyte (soil). This model of corrosion is referred to as a corrosion cell. If all four elements are present, direct current flows from the anode areas into the soils, through the soil and onto the cathode areas, and through the metal back to the anode. Anodes and cathodes occur on the metal surface caused by a wide variety of reasons including:

Alloying of the metals
Differential aeration of the soil
Different resistivity of the electrolyte
Cold working of metal surface
Coupling of two different metal in the electrolyte
Welded areas vs. un-welded areas of metal surface
Coated or un-coated areas of metal surface
Stray Current

Many of these conditions are present for the intra plant-piping network planned for this WTP site. The encasement pipe as specified is alloyed carbon steel creating the initial anode – cathodes cells. The FBE coating specified is an excellent coating and tight quality control is planned for factory application. However the coating will still have some holidays that go undetected and the coating will experience some undetected nicks and scrapes during installation. Additionally the piping will

be inter-tied with valves, pumps, leak detection probes, etc which will be made up of different metals creating galvanic couples. Moreover field coating of the weld joints cannot fully match the quality achieved at the factory. Further the piping in the plant may pass under roads or paved areas in one area while in other areas in may be under native soil. Areas under the paved areas will have reduced moisture content and a lower aeration content than the native soil areas. The encasement clearly will experience corrosion by interaction with the soil environment.

Discussion

The Table shown below was published as part of the National Association of Corrosion Engineers (NACE) Basic Corrosion Course. It is intended to be a guideline of possible corrosion in homogenous soil. Considering the soil conditions at the WTP described above, the soils would be classified as only progressively less corrosive to carbon steel.

Rough Indications of Soil
Corrosivity vs. Resistivity

Ohm-cm	Description
Below 500	Very corrosive
500-1,000	Corrosive
1,000-2,000	Moderately corrosive
2,000-10,000	Mildly corrosive
Above 10,000	Progressively less corrosive

If one uses it as a guide for the WTP, it suggests the WTP_would expect very little corrosion of buried metals at the site. However, since the resistivity at the site is not homogenous but rather is heterogeneous, the different corrosion cells created by different resistivities at the site will increase corrosion above that indicated by the above table.

A NACE publication "Corrosion Data Survey" has compiled empirical historical data on corrosion rates of carbon steel in various soil resistivities. From this information we find a range of corrosion rates for the resistivity at the WTP. Corrosion rates could be less than 2 mils per year to as high as 10 mils per year. If this relative guide were used we would expect serious damage from anywhere from 15 to 70 years. Since most of the resistivity data is well above the 10,000 ohm-cm level it more likely closer to the 70 years than 15. However this determination of corrosion rates is subjective based on the experience of the corrosion engineer. Neither use of this approach nor the table above provides a satisfactory way for determining compatibility of the piping network at the WTP site.

If it were known the metals were buried in a homogenous soil then laboratory testing could be conducted to determine a more objective prediction of corrosion rates. The laboratory approach would be to complete a linear polarization curve to determine the polarization resistance. Then, the data would be combined with the electrochemical constant and the surface area of the test sample in an equation that results in corrosion rates in mils per year. However nonuniform soils

are present at the site, thus precluding use of this approach. Moreover the pipelines on the site will be subjected to some increased corrosion as indicated by the other corrosion consideration noted above. The corrosion impact of these factors would be left out of any corrosion rate calculation.

The determination in this case as in most soils leaves the expected corrosion rates determination to a subjective determination of a corrosion engineer based on his experience. Even if a corrosion rate for the WTP site could be defined, the other information needed to determine the pipe-soil compatibility is the planned life of the pipelines. The amount of waste to be processed at the WTP and the time needed to process the waste are just estimates. Therefore with only a rough indication corrosion rate in these soils and a planned design life of 40 years for the_WTP corrosion mitigating measures are required to assure pipe-soil compatibility.

The methods available to mitigate corrosion cells include the following:

1. Remove or insulate the electrical path between anodes and cathodes
2. Change or treat the soil
3. Isolate the pipe from the soil.
4. Apply anodic or cathodic protection

The first two approaches are not practical for any buried piping network. The most common method of accomplishing the third approach is to apply a non-conductive coating to the pipeline surface. A good coating system effectively isolates nearly all the pipe from the soil. However pinholes and holidays may exist in most coatings and some metal will remain in contact with the soil. Some corrosion can be expected to continue. Anodic protection is impractical for a buried pipeline system A correctly designed and operated cathodic protection system will effectively mitigate all corrosion on the pipeline by sacrificing another material (anode) that is remote from the metal surface. With an effective cathodic protection system installed at the WTP, there wouldn't be any corrosion of the pipeline and it would be considered compatible with the soil.

Applying cathodic protection to a bare steel pipeline results in high installation cost and high operating expenses. Good engineering practice is to apply a coating to the pipeline and also install cathodic protection. The cost of installing and operating a cathodic protection system for a coated pipeline is 5% or less of that required for a bare pipe. The cathodic protection system for a coated pipeline is protecting just the pinholes or holidays in the coating that comes in contact with the soil. The WTP plan calls for this approach of applying cathodic protection to a coated piping network. This plan for the WTP piping is good engineering practice. The question remains is the coating system specified and the cathodic protection specified adequate to make the pipelines at the WTP compatible with the site soils?

The selection of FBE coating for the WTP is an excellent choice for this application because it is environmentally compatible with the soils and will provide an excellent barrier between the pipe and soil with the minimum of holidays. The FBE coating called out in the project specifications is of the highest quality. The specifications outlines excellent application procedures. The specification requires detailed inspection procedures for quality control for application of the

coating. Moreover the storage, handling and shipping procedures for the pipe in route to the WTP site should ensure the pipe is placed in the ground in excellent condition.

The cathodic protection system specification for the WTP requires the quality of all system components to be met with the national standards by the designer. It provides the designer with direction on what installation practices may be used at the site. It requires the designer establish quality assurance procedures for the design, procurement, and installation of the system. A cathodic protection system designed and installed in accordance with the specification will provide a system that will mitigate all corrosion of the pipelines at the WTP.

In my professional opinion that if the piping is coated with FBE in accordance with the specification and is cathodically protected in accordance with the specification the pipelines will be compatible with the soils at this WTP.

Dennis R. Helgeson, P. E.
Corrosion Specialists # 2736

8/11/03
Date

IQRPE REVIEW – PRETREATMENT FACILITY BELOW GRADE PLANT WASH AND DISPOSAL WASTE TREATMENT PLANT TRANSFER LINES, SECONDARY CONTAINMENT, ANCILLARY EQUIPMENT, AND CORROSION ASSESSMENT

"I, John T. Baxter, have reviewed, and certified a portion of the design of a new tank system or component located at the Hanford Waste Treatment Plant, owned/operated by Department of Energy, Office of River Protection, Richland, Washington. My duties were independent review of the current design for the Pretreatment Facility Below Grade PWD WTP Transfer Lines, Secondary Containment, Ancillary Equipment, and Corrosion Assessment as required by the Dangerous Waste Regulations, namely, WAC 173-303-640(3) applicable paragraphs, i.e., (a) through (g)."

"I certify under penalty of law that I have personally examined and am familiar with the information submitted in this document and all attachments and that, based on my inquiry of those individuals immediately responsible for obtaining the information, I believe that the information is true, accurate, and complete. I am aware that there are significant penalties for submitting false information, including the possibility of fine and imprisonment."

The documentation reviewed indicate that the design intent fully satisfies the requirements of the WAC.

The attached review is 9 sheets numbered 1 through 9.

JOHN T. BAXTER
STATE OF WASHINGTON
18978
REGISTERED PROFESSIONAL ENGINEER
EXPIRES: 10/28/04

John T. Baxter 08/13/03

Signature Date

1 of 3

RECEIVED
AUG 13 2003
BNI-Subcontracts

COGEMA ENGINEERING

August 13, 2003

COGEMA-03-0255

T. A. O'Toole
Bechtel National, Inc.
Waste Treatment Plant
2435 Stevens Center
Richland, Washington 99352

Dear Ms. O'Toole:

STRUCTURAL INTEGRITY ASSESSMENT OF THE PRETREATMENT FACILITY BELOW GRADE PLANT WASH AND DISPOSAL WASTE TREATMENT PLANT TRANSFER LINES, SECONDARY CONTAINMENT, ANCILLARY EQUIPMENT, AND CORROSION ASSESSMENT

The integrity assessment has been completed per the contract requirements and is attached for your use. The assessment found the design intent is sufficient to ensure the below grade Plant Wash and Disposal (PWD) Waste Treatment Plant (WTP) transfer lines, secondary containment and ancillary equipment will be adequately designed and that the below grade PWD WTP transfer lines, secondary containment and ancillary equipment will have sufficient structural strength, compatibility with the waste(s) to be stored or treated, and corrosion protection to ensure that they will not collapse, rupture, or fail.

If you have any questions, please contact me at (509) 376-5445, or via facsimile at (509) 372-0504.

Sincerely,

K V Scott

K. V. Scott, Manager
Facilities, Structures & Components

kld

Attachment

cc: D. C. Pfluger MS4-E2 w/ attachment

2003

2425 Stevens Center Place, Second Floor, Richland, Washington 99352 Tel: (509) 372-3572 - Fax: (509) 372-3169
COGEMA Engineering Corporation

MASTER DISTRIBUTION SCHEDULE

Project Name: RPP-WTP

Document Distribution: 24590-CM-HC4-HXYG-00138

Document Number: **Revision:**

Insert rows as necessary ↑

Name	MSIN	Controlled	Uncontrolled	Size				Comments
				8 ½ x 11	11 x 17	Full	As Is	
Dan Pfluger	MS4-E2							LEAD REVIEWER
Brad Erlundson								Reviewer
Trisha O'Toole								Info

Insert rows as necessary ↑

DAN PFLUGER
Approver's Name (Print)

Approver's Signature

8/27/2002
Date

3083

Bechtel Systems
&
Infrastructure, Inc.

JOB No. 24590

SUPPLIER DOCUMENT STATUS

1. ☒	WORK MAY PROCEED
2. ☐	REVISE AND RESUBMIT. WORK MAY PROCEED SUBJECT TO RESOLUTION OF INDICATED COMMENTS
3. ☐	REVISE AND RESUBMIT. WORK MAY NOT PROCEED
4. ☐	REVIEW NOT REQUIRED. WORK MAY PROCEED.

PERMISSION TO PROCEED DOES NOT CONSTITUTE ACCEPTANCE OR APPROVAL OF DESIGN DETAILS, CALCULATIONS, ANALYSES, TEST METHODS, OR MATERIALS DEVELOPED OR SELECTED BY THE SUPPLIER AND DOES NOT RELIEVE SUPPLIER FROM FULL COMPLIANCE WITH CONTRACTUAL OBLIGATIONS.

	M	P	ML	H	MH	E	C&I	CS&A	PD	PT	ESH
REVIEWED											

G-321 DOCUMENT CATEGORY N/A
[From Supplement A to G-321-E (E) or G-321-V (V), as applicable]
RESPONSIBLE ENGINEER DCPflugner DATE 4/1/03

24590-CM-HC4-HXYG-00138-01-02
REV. 00C

SUBCONTRACT SUBMITTAL

4/2/03

Processed/ Data Entry ☒ Copied/ QA ☐ Scanned ☐ Filed

4-2-03 MC

R10029733

IQRPE REVIEW – PRETREATMENT FACILITY BELOW GRADE PLANT WASH AND DISPOSAL SYSTEM ANCILLARY EQUIPMENT

"I, John T. Baxter, have reviewed, and certified a portion of the design of a new tank system or component located at the Hanford Waste Treatment Plant, owned/operated by Department of Energy, Office of River Protection, Richland, Washington. My duties were independent review of the current design for the Pretreatment Facility Below Grade Plant Wash and Disposal System Ancillary Equipment as required by the Dangerous Waste Regulations, namely, WAC 173-303-640(3) (applicable paragraphs (i.e., (a) through (g))."

"I certify under penalty of law that I have personally examined and am familiar with the information submitted in this document and all attachments and that, based on my inquiry of those individuals immediately responsible for obtaining the information, I believe that the information is true, accurate, and complete. I am aware that there are significant penalties for submitting false information, including the possibility of fine and imprisonment."

The documentation reviewed indicates that the design intent fully satisfies the requirements of the WAC.

The attached review is 7 sheets numbered 1 through 7.

JOHN T. BAXTER
STATE OF WASHINGTON
18978
REGISTERED
PROFESSIONAL ENGINEER

EXPIRES: 10/28/04

John T. Baxter 03/31/03

Signature Date

24590-CM-HC4-HX4G-00138-01-02 Rev 00C

STRUCTURAL INTEGRITY ASSESSMENT OF THE PRETREATMENT FACILITY BELOW GRADE PLANT WASH AND DISPOSAL SYSTEM ANCILLARY EQUIPMENT

COGEMA-IA-002
REV. 3

Pretreatment Facility (PTF) Below Grade Plant Wash Disposal System Ancillary Equipment			COGEMA-IA-002, Rev 3
Information assessed	Y/N	Source of Information	Assessment
Ancillary equipment design standards are appropriate and adequate for the equipment's intended use.	Y	24590-WTP-DC-PS-01-001, Rev 1, Pipe Stress Design Criteria; 24590-WTP-DC-PS-01-002, Rev 1, Pipe Support Design Criteria; 24590-PTF-M6-PWD-P0002, Rev 1, Drawing, P&ID-PTF Plant Wash & Disposal System Effluent Collection PWD-VSL-00033/00043/00044 (Q); 24590-PTF-M6-PWD-P0041, Rev 1, Drawing, P&ID-PTF Plant Wash & Disposal System C2 Area Floor Drains Collection Vessel; 24590-PTF-M6-PWD-P0043, Rev 1, Drawing; P&ID-PTF Plant Wash & Disposal System C3 Area Floor Drains; 24590-PTF-3YD-PWD-00001, Rev 0, System Description for Plant Wash and Disposal System PWD and Radioactive Liquid Waste Disposal System RLD; COGEMA-IA-009, current revision, Structural Integrity Assessment of the Pretreatment Facility Below Grade Plant Wash and Disposal System Tanks	The ancillary equipment evaluated in this integrity assessment of the PTF Plant Wash and Disposal System is the ancillary equipment associated with tanks PWD-VSL-00033/-00043/-00046. Design standards for tank internal equipment are discussed in COGEMA IA-009, the integrity assessment for the Plant Wash and Disposal System tanks. Pipe Stress Design Criteria identifies ASME B31.3 as the design code for piping systems of the WTP. Due to more stringent seismic requirements, the design criteria includes methodology provided in ASME Section III Code to supplement the design rules of ASME B31.3 Code for SC-I and SC-II piping. SC-III or SC-IV piping systems will be designed per UBC for seismic loads. Table 1 in Pipe Stress Design Criteria identifies categories of piping and the applicable design code and analysis methods, seismic loads and seismic analysis methods, and acceptance criteria. The codes and methods identified in Table 1 are appropriate for piping containing aqueous mixed waste over the range of conditions identified for this system. Pipe Support Design Criteria considers significant loadings identified in B31.3 and identifies ASME Section III as the applicable code for SC-1 through SC-IV linear pipe supports. These are appropriate loadings and codes for linear pipe supports of an aqueous mixed waste piping system over the range of conditions identified for this system.
If the ancillary equipment to be used is not built to a design standard, the design calculations demonstrate sound engineering principles of construction.	N/A	24590-WTP-DC-PS-01-001, Rev 1, Pipe Stress Design Criteria; 24590-WTP-DC-PS-01-002, Rev 1, Pipe Support Design Criteria.	The ancillary equipment is built to design standards. The WTP piping is to be designed per ASME B31.3 supplemented by ASME Section III, and the UBC as identified in the Pipe Stress Design Criteria. The piping supports are designed using load ratings for Component Standard type pipe supports and are otherwise designed using allowables from ASME Section III.

Pretreatment Facility (PTF) Below Grade Plant Wash Disposal System Ancillary Equipment			COGEMA-IA-002, Rev 3
Information assessed	Y/N	Source of Information	Assessment
Ancillary equipment has adequate strength at the end of its design life to withstand the operating pressure, operating temperature, thermal expansion, and seismic loads. Equipment is protected against physical damage and excessive stress due to settlement, vibration, expansion, or contraction.	Y	24590-WTP-DC-PS-01-001, Rev 1, Pipe Stress Design Criteria; 24590-WTP-DC-PS-01-002, Rev 1, Pipe Support Design Criteria; 24590-WTP-PER-M-02-002, Rev 0, Materials for Ancillary Equipment; 24590-PTF-3YD-PWD-00001, Rev 0, System Description for Plant Wash and Disposal System PWD and Radioactive Liquid Waste Disposal System RLD; 24590-WTP-DB-ENG-01-001, Rev 0, Basis of Design.	For piping design, rules for consideration of operating pressure, operating temperature, thermal expansion, and seismic loads are provided by ASME B31.3 (ASME B31.3 is identified as the design code for WTP in Pipe Stress Design Criteria). ASME B31.3 includes vibration, settlement and corrosion allowance as design considerations. The ASME Section III Code is used to supplement the design rules of the ASME B31.3 Code to provide appropriate seismic design requirements. Pipe Support Design Criteria considers all significant loadings identified in ASME B31.3. The required design life of 40 years for ancillary equipment is identified in the Basis of Design. Components in non-maintainable areas are to be designed to last the entire design life of the plant. Corrosion analyses and Mechanical Data Sheets for the vessels, and vessel internal equipment, identify corrosion allowances for a 40 year life. Materials for Ancillary Equipment identifies a conservative approach such that ancillary equipment downstream of a source vessel is constructed of the same or better material and with the same corrosion allowance as the source vessel itself. Since the vessels all have detailed corrosion analyses, using the same or better materials ensures that the material will be appropriate for the wastes for the entire design life. If the material for the ancillary equipment is to be different from the source vessel, an analysis by the materials group is required (Materials for Ancillary Equipment).

Pretreatment Facility (PTF) Below Grade Plant Wash Disposal System Ancillary Equipment			COGEMA-IA-002, Rev 3
Information assessed	Y/N	Source of Information	Assessment
Ancillary equipment supports are adequately designed.	Y	24590-WTP-DC-PS-01-002, Rev 1, Pipe Support Design Criteria; 24590-WTP-PL-PS-01-001, Rev 1, Verification and Validation Test Plan for Bechtel's ME150 Pipe Support Family of Programs (PCFAPPS); 24590-WTP-VV-PS-01-001, Rev 1, Verification and Validation Report for ME101, Linear Elastic Analysis of Piping Version N6. COGEMA-IA-009, current revision, Structural Integrity Assessment of the Pretreatment Facility Below Grade Plant Wash and Disposal System Tanks.	The Pipe Support Design Criteria considers the significant loadings (operating pressure, operating temperature, thermal expansion, vibration, settlement and seismic loads). Supporting components are to be designed to allow a minimum of heat to be transferred to the building structures (building structure not to exceed 150 deg F for concrete and 200 deg F for steel, Pipe Support Design Criteria). The Design criteria specifically addresses component standard type pipe supports, linear type pipe supports, design of welds, attachments to building structures, requirements for bolted joints, loads, load conditions, allowable stresses, clearances, multiple pipe frame supports, and clamps and attachments to pipe. Loads are evaluated against the design criteria provided in ASME Section III (using allowable limits for normal load conditions for SC-I/SC-II supports and allowable limits for faulted load conditions for SC-III/SC-IV supports). Analysis is by manual calculation or approved computer programs. The subjects covered in Pipe Support Design Criteria and the use of ASME Section III design criteria are appropriate and adequate for an aqueous mixed waste piping system over the range of conditions identified for this system. Use of approved and validated computer programs to analyze piping designs is appropriate. Design standards for vessel internal equipment supports are discussed in COGEMA-IA-009, the integrity assessment for the Plant Wash and Disposal System tanks.
Seams and connections are adequately designed.	Y	24590-WTP-DB-ENG-01-001, Rev 0, Basis of Design; 24590-WTP-DC-PS-01-001, Rev. 1, Pipe Stress Design Criteria.	The Basis of Design states that in-cell and in-cave process and service piping connections will be designed to minimize the potential for liquid waste leakage or seepage when disconnected. Basis of Design also states that in-cell pipework that is non-maintainable will be fully welded. Pipe Stress Design Criteria specifies ASME B31.3 design code for the piping systems supplemented by ASME III, Div. 1 for seismic design. ANSI B16.5 is applied for flange designs. Welding is per ASME B31.3 and ASME IX. These are appropriate basis of design and design codes for the aqueous mixed waste piping system being evaluated.

Pretreatment Facility (PTF) Below Grade Plant Wash Disposal System Ancillary Equipment			COGEMA-IA-002, Rev 3
Information assessed	Y/N	Source of Information	Assessment
The system will withstand the effects of frost heave.	N/A	24590-PTF-3YD-PWD-00001, Rev 0, System Description for Plant Wash and Disposal System PWD and Radioactive Liquid Waste Disposal System RLD.	The ancillary equipment considered in this assessment is located below grade at the (-) 19'-0" and (-) 45'-0" elevations of the Pretreatment Facility. These locations are below the frost line.
Characteristics of the waste to be stored or treated have been identified (ignitable, reactive, toxic, specific gravity, vapor pressure, flash point, temperature)	Y	24590-PTF-3YD-PWD-00001, Rev 0, System Description for Plant Wash and Disposal System PWD and Radioactive Liquid Waste Disposal System RLD; 24590-WTP-PSAR-ESH-01-002-02, Rev. 0, Preliminary Safety Analysis Report to Support Construction Authorization; PT Facility Specific Information.	The ancillary equipment considered in this assessment will handle wastes with the same characteristics as do the source vessels. Operating pressures for ancillary equipment will be different from those of the vessels, enveloping pressures and temperatures are reflected in the pipe class assigned to each pipe run. Mechanical Systems Data Sheets for the source vessels contain information on the characteristics of the waste carried by the downstream ancillary equipment (refer to the integrity assessment of the source vessel for waste characteristics for each pipe run). The Preliminary Safety Analysis Report (PSAR) provides a summary of potential hazardous conditions associated with each Pretreatment Facility vessel and the design provisions that are to be used to provide adequate control of each hazard. These hazards range from flammable gas accumulations in the vapor space of the PWD tanks to criticality. Design provisions for control of these hazards are listed in the PSAR. For example, the Pretreatment Vessel Vent Process System provides flammable gas dilution and control in the PWD tanks and ancillary equipment. A facility wide grounding system is furnished to control ignition sources in the same tanks and ancillary equipment.
Ancillary equipment is designed to handle the wastes with the characteristics defined above and any treatment reagents.	Y	24590-WTP-PER-M-02-002, Rev 0, Materials for Ancillary Equipment.	As noted in the adjacent entry above, source vessels are designed to store the waste and treatment reagents (if any) that they receive. The ancillary equipment materials that contact the waste are to be equal to or better than the upstream vessel.

Pretreatment Facility (PTF) Below Grade Plant Wash Disposal System Ancillary Equipment			COGEMA-IA-002, Rev 3
Information assessed	Y/N	Source of Information	Assessment
The pH range of the waste, waste temperature, and the corrosion behavior of the structural materials are adequately addressed. Ancillary equipment material and protective coatings ensure the ancillary equipment structure is adequately protected from the corrosive effects of the waste stream and external environments. The protection is sufficient to ensure the equipment will not leak or fail for the design life of the system.	Y	24590-PTF-3YD-PWD-00001, Rev 0, System Description for Plant Wash and Disposal System PWD and Radioactive Liquid Waste Disposal System RLD; 24590-WTP-PER-M-02-002, Rev 0, Materials for Ancillary Equipment; 24590-WTP-3PS-NN00-T0001, Rev 0, Engineering Specification for Hot and Anti-Sweat Thermal Insulation.	The Basis of Design identifies a service design life of 40 years for the ancillary equipment. All non-maintainable items will be designed to last the life of the facility. The Materials for Ancillary Equipment document requires that the material selection and corrosion/erosion allowances for ancillary equipment in contact with the waste will be equal to or better than the material and corrosion allowance of the waste source vessel. The pH range and temperature of the waste are identified on the mechanical data sheets for the source vessels. Corrosion interactions with the materials are addressed by the corrosion reports for the upstream vessels (refer to the integrity assessments for the source vessels). The Thermal Insulation specification requires that all insulating materials used in the building be pre-approved for use on austenitic stainless steel in accordance with applicable ASTM procedures and tests.
Corrosion allowance is adequate for the intended service life of the ancillary equipment.	Y	24590-WTP-PER-M-02-002, Rev 0, Materials for Ancillary Equipment; 24590-WTP-DC-PS-01-001, Rev. 1, Pipe Stress Design Criteria.	ASME B31.3 is the code for the WTP piping. Consideration of corrosion, including corrosion allowance, is a mandatory requirement of ASME B31.3. As noted above, the required service life of 40 years is identified in the Basis of Design and System Description. An appropriate corrosion allowance for a 40 year service life is identified on the Mechanical Data Sheets and corrosion reports for each of the source vessels. The Materials for Ancillary Equipment document requires that downstream ancillary equipment is to be constructed of equal or better materials, and with the same corrosion allowance as the source vessel.

Information assessed	Y/N	Source of Information	Assessment
Pressure controls (vents and relief valves) are adequately designed to ensure pressure relief if normal operating pressures in the tank are exceeded.	Y	24590-WTP-DC-PS-01-001, Rev. 1, Pipe Stress Design Criteria.	Pressure controls related to the PWD-VSL-00033/-00043/-00046 vessels themselves are discussed in their structural integrity assessments. ASME B31.3 is the design code for the WTP piping. ASME B31.3 requires provision be made to safely contain or relieve any pressure to which the piping may be subjected. ASME B31.3 piping not protected by a pressure relieving device, or that can be isolated from a pressure reliving device must be designed for at least the highest pressure that can be developed.
Maximum flows and any unusual operating stresses are identified	Y	24590-PTF-M5K-V17T-00001, Rev B, Simplified Process Flow Diagram Pretreatment Facility (Sheet 1of 2); 24590-PTF-M5K-V17T-00002, Rev B, Simplified Process Flow Diagram Pretreatment Facility (Sheet 2 of 2); 24590-PTF-M5-V17T-P0022002, Rev 1, Process Flow Diagram Pretreatment Plant Wash and Drain System PWD; 24590-WTP-DB-ENG-01-001, Rev 0, Basis of Design.	The expected flow paths for the ancillary equipment are identified on the Process Flow Diagrams. The maximum flows will be determined later in detail design; however, ASME B31.3 requires piping to be designed to the highest pressure that can be developed assuring that maximum operating stresses remain within code allowables.

Pretreatment Facility (PTF) Below Grade Plant Wash Disposal System Ancillary Equipment			COGEMA-IA-002, Rev 3
Information assessed	Y/N	Source of Information	Assessment
Ancillary equipment is designed with secondary containment that is constructed of materials compatible with the waste and of sufficient strength to prevent failure (pressure gradients, waste, climatic conditions, daily operations), provided with a leak-detection system, and designed to drain and remove liquids.	Y	24590-PTF-M6-PWD-P0002, Rev 1, P&ID-PTF Plant Wash & Disposal System Effluent Collection PWD-VSL-00033/00043/00044 (Q); 24590-PTF-M6-PWD-P0041, Rev 1, P&ID-PTF Plant Wash & Disposal System C2 Area Floor Drains Collection Vessel; 24590-PTF-M6-PWD-P0043, Rev 1, P&ID-PTF Plant Wash & Disposal System C3 Area Floor Drains; 24590-PTF-3YD-PWD-00001, Rev 0, System Description for Plant Wash and Disposal System PWD and Radioactive Liquid Waste Disposal System RLD; 24590-WTP-DB-ENG-01-001, Rev 0, Basis of Design.	The ancillary equipment considered in this assessment is located below grade within the Pretreatment facility. Tanks -00033 and -00043 are located in a (-) 45'-0" elevation pit with limited remote access. Tank -00046 is located in a C3 cell of the Pretreatment facility at elevation (-) 19'-0". Secondary containment for ancillary equipment within the cells is provided by the liners and sumps within the cells. The liners and the sumps are discussed separately in the PTF below grade secondary containment integrity assessment. Where process pipes exit cells, the secondary containment is to be either a co-axial pipeline system or an appropriately lined enclosure. All secondary containments will be provided with leak detection systems. The P&ID indicates that RLD drain lines to PWD from the High-Level Waste building are coaxial lines with leak detection.

R10045585

COGEMA ENGINEERING

RECEIVED

APR 01 2003

BNI-Subcontracts

March 31, 2003

COGEMA-03-0101

T. A. O'Toole
Bechtel National, Inc.
Waste Treatment Plant
2435 Stevens Center
Richland, Washington 99352

Dear Ms. O'Toole:

STRUCTURAL INTEGRITY ASSESSMENT OF THE PRETREATMENT FACILITY BELOW GRADE PLANT WASH AND DISPOSAL SYSTEM ANCILLARY EQUIPMENT

The integrity assessment has been completed per the contract requirements and is attached for your use. The assessment found the design intent is sufficient to ensure the ancillary equipment will be adequately designed and that the ancillary equipment will have sufficient structural strength, compatibility with the waste(s) to be stored or treated, and corrosion protection to ensure that they will not collapse, rupture, or fail.

If you have any questions, please contact me at (509) 376-5445, or via facsimile at (509) 372-0504.

Sincerely,

K. V. Scott, Manager
Facilities, Structures & Components

kld

Attachment

cc: D. C. Pfluger w/ attachment

MASTER DISTRIBUTION SCHEDULE

Project Name: RPP-WTP

Document Distribution: 24590-CM-HC4-HXYG-00138

Document Number: **Revision:**

Insert rows as necessary ↑

Name	MSIN	Controlled	Uncontrolled	Size				Comments
				8 ½ x 11	11 x 17	Full	As Is	
Dan Pfluger	MS4-E2							LEAD REVIEWER
Brad Erlundson								Reviewer
Trisha O'Toole								Info

Insert rows as necessary ↑

DAN PFLUGER
Approver's Name (Print)

Approver's Signature

8/27/2002
Date

Bechtel Systems
&
Infrastructure, Inc.

JOB No. 24590

SUPPLIER DOCUMENT STATUS

1. ☒ WORK MAY PROCEED
2. ☐ REVISE AND RESUBMIT. WORK MAY PROCEED SUBJECT TO RESOLUTION OF INDICATED COMMENTS
3. ☐ REVISE AND RESUBMIT. WORK MAY NOT PROCEED
4. ☐ REVIEW NOT REQUIRED. WORK MAY PROCEED.

PERMISSION TO PROCEED DOES NOT CONSTITUTE ACCEPTANCE OR APPROVAL OF DESIGN DETAILS, CALCULATIONS, ANALYSES, TEST METHODS, OR MATERIALS DEVELOPED OR SELECTED BY THE SUPPLIER AND DOES NOT RELIEVE SUPPLIER FROM FULL COMPLIANCE WITH CONTRACTUAL OBLIGATIONS.

	M	P	ML	H	MH	E	C&I	CS&A	PD	PT	ESH
REVIEWED											

G-321 DOCUMENT CATEGORY N/A
[From Supplement A to G-321-E (E) or G-321-V (V), as applicable]

RESPONSIBLE ENGINEER [signature] DATE 3/31/03

24590-CM-HC4-HXYG-00138-01-07
REV. 00B

SUBCONTRACT SUBMITTAL

4/1/03

☒ Processed/ Data Entry ☒ Copied/ QA ☐ Scanned ☐ Filed

4-3-03

R10045242

RECEIVED

MAR 2 8 2003

BNI-Subcontracts

STRUCTURAL INTEGRITY ASSESSMENT OF THE WASTE TREATMENT AND IMMOBILIZATION PLANT

PRETREATMENT FACILITY BELOW GRADE PLANT WASH AND DISPOSAL SYSTEM TANKS

COGEMA-IA-009
REV. 1

24590-CM-HC4-HXY6-00138-01-07 Rev. 00B

STRUCTURAL INTEGRITY ASSESSMENT OF THE PRETREATMENT FACILITY BELOW GRADE PLANT WASH AND DISPOSAL SYSTEM TANKS

"I, John T. Baxter have reviewed, and certified a portion of the design of a new tank system or component located at the Hanford Waste Treatment Plant, owned/operated by Department of Energy, Office of River Protection, Richland, Washington. My duties were independent review of the current design for the Pretreatment Facility Below Grade Plant Wash And Disposal System Tanks as required by The Dangerous Waste Regulations, Namely, WAC 173-303-640(3) (applicable paragraphs (i.e., (a) through (g)."

"I certify under penalty of law that I have personally examined and am familiar with the information submitted in this document and all attachments and that, based on my inquiry of those individuals immediately responsible for obtaining the information, I believe that the information is true, accurate, and complete. I am aware that there are significant penalties for submitting false information, including the possibility of fine and imprisonment."

The documentation reviewed indicate that the design intent fully satisfies the requirements of the WAC.

The attached review is 17 sheets numbered 1 through 17.

JOHN T. BAXTER
STATE OF WASHINGTON
18978
REGISTERED
PROFESSIONAL ENGINEER

EXPIRES: 10 / 28 / 04

John T. Baxter 03/28/03

Signature Date

PRETREATMENT WASTE TANK (PWD) EL (-) 45'-0" (Ultimate Overflow Vessel -00033) COGEMA-IA-009, Rev. 1			
Information assessed	Y/N	Source of Information	Assessment
Tank design standards are appropriate and adequate for the tank's intended use.	Y	24590-PTF-M6-PWD-P0002, Rev. 1, P & ID – PTF PLANT WASH & DISPOSAL SYSTEM EFFLUENT COLLECTION PWD-VSL-00033/00043/00044 (Q); 24590-PTF-MV-PWD-P0001001, Rev. 1, EQUIPMENT ASSEMBLY ULTIMATE OVERFLOW VESSEL PWD-VSL-00033 (Q) SHEET 1 OF 2; 24590-PTF-MV-PWD-P0001002, Rev. 1, EQUIPMENT ASSEMBLY ULTIMATE OVERFLOW VESSEL PWD-VSL-00033 (Q) SHEET 2 OF 2; Mechanical Systems Data Sheet 24590-PTF-MVD-PWD-P0001, Rev. 1, PLANT ITEM No. 24590-PTF-MV-PWD-VSL-00033; 24590-WTP-3PS-MV00-TP001, Rev. 0, Engineering Specification for Pressure Vessel Design and Fabrication; 24590-WTP-3PS-MV00-TP003, Rev. 1, Engineering Specification for Pressure Vessel Fatigue Analysis.	The Ultimate Overflow Vessel (PWD-VSL-00033) and all appurtenances are to be designed to ASME Section VIII, Division I rules which are appropriate for an unfired pressure vessel operating with aqueous mixed waste solutions over the pressure and temperature range specified for this vessel. Supplementary requirements are specified in the Engineering Specification for Pressure Vessel Design and Fabrication. These supplementary requirements address pressure vessel fatigue analysis, positive material identification, standard fabrication tolerances, acceptable welding procedures for the tank and appurtenances, welder qualifications and testing records, NDE inspections and records, quality assurance requirements, and packaging, shipping, handling and storage requirements. Some of the tank internal equipment is subject to cyclic loading. The pulse jet mixer design pressure pulses and the number of lifetime cycles are conservative. The fatigue design standards (ASME Section VIII, Division 2) are appropriate for components with a high number of load cycles These are acceptable codes and standards. The Ultimate Overflow Vessel (PWD-VSL-00033) is a vertical tank with a 288 in. ID and a vertical length of 89 in. tangent to tangent supported on a cylindrical skirt. Top and bottom heads are flanged and dished torispherical heads. The shell and heads are to have a minimum thickness of 1 inch. Materials for the shell, heads and internals are to be SA-240 316L stainless steel. The operating volume is to be about 29,580 gallons and the total volume is to be 41,650 gallons.

PRETREATMENT WASTE TANK (PWD) EL (-) 45'-0" (Ultimate Overflow Vessel -00033) COGEMA-IA-009, Rev. 1			
Information assessed	Y/N	Source of Information	Assessment
If a non-standard tank is to be used, the design calculations demonstrate sound engineering principles of construction.	N/A	24590-WTP-3PS-MV00-TP001, Rev. 0, Engineering Specification for Pressure Vessel Design and Fabrication.	The Engineering Specification for Pressure Vessel Design and Fabrication requires that the ASME Section VIII, Division 1 vessels (PWD-VSL-00033) be delivered after design, fabrication, inspection and testing with an ASME U stamp and that the tank be registered with the National Board. It is a shop fabricated tank for mixed waste service in the Pretreatment Facility. As discussed in the item immediately above, the tank design standards are appropriate and adequate for the tank's intended use.
Tank has adequate strength, after consideration of the corrosion allowance, to withstand the operating pressure, operating temperature, and seismic loads.	Y	24590-WTP-3PS-MV00-TP001, Rev. 0, Engineering Specification for Pressure Vessel Design and Fabrication; 24590-WTP-3PS-MV00-TP002, Rev. 1, Engineering Specification for Seismic Qualification Criteria for Pressure Vessels; 24590-WTP-3PI-SS90-T0001, Rev. 0, Seismic Qualification of Seismic Category I/II Equipment and Tanks; 24590-PTF-MV-PWD-P0001001, Rev. 1, EQUIPMENT ASSEMBLY ULTIMATE OVERFLOW VESSEL PWD-VSL-00033 (Q) SHEET 1 OF 2; 24590-PTF-MV-PWD-P0001002, Rev. 1, EQUIPMENT ASSEMBLY ULTIMATE OVERFLOW VESSEL PWD-VSL-00033 (Q) SHEET 2 OF 2; Mechanical Systems Data Sheet 24590-PTF-MVD-PWD-P0001, Rev. 1, PLANT ITEM No. 24590-PTF-MV-PWD-VSL-00033.	The Engineering Specification for Pressure Vessel Design and Fabrication requires specific consideration of the operating pressures and temperatures, seismic loads, and corrosion in the design process in accordance with the requirements of ASME Section VIII, Div. I for the vessel and internal ancillary equipment. Supplementary design criteria are specified in the Engineering Specifications for Seismic Qualification Criteria for Pressure Vessels and Seismic Qualification of Seismic Category I/II Equipment and Tanks to provide for the seismic design analysis. The Mechanical Systems Data Sheet identifies the tank operating pressure and temperature ranges and the requirement for seismic qualification in the design and specifies SA-240 316L stainless steel as the shell and head materials. The assembly drawings specify a 1 in. minimum thickness for the tank shell and heads.

PRETREATMENT WASTE TANK (PWD) EL (-) 45'-0" (Ultimate Overflow Vessel -00033) COGEMA-IA-009, Rev. 1			
Information assessed	Y/N	Source of Information	Assessment
Tank foundation will maintain the load of a full tank.	Y	24590-WTP-3PS-MV00-TP001, Rev. 0, Engineering Specification for Pressure Vessel Design and Fabrication; 24590-WTP-PER-CSA-02-001, Rev. 3, Secondary Containment Design; 24590-PTF-MV-PWD-P0001001, Rev. 1, EQUIPMENT ASSEMBLY ULTIMATE OVERFLOW VESSEL PWD-VSL-00033 (Q) SHEET 1 OF 2; 24590-PTF-MV-PWD-P0001002, Rev. 1, EQUIPMENT ASSEMBLY ULTIMATE OVERFLOW VESSEL PWD-VSL-00033 (Q) SHEET 2 OF 2.	The Ultimate Overflow Vessel (PWD-VSL-00033) is supported by a cylindrical skirt. The fabricator will determine the skirt thickness based on the design requirements in the Engineering Specification for Pressure Vessel Design and Fabrication. It is a general requirement of ASME VIII, Division 1 that vessels shall be so supported and the supporting members shall be arranged and/or attached to the vessel wall in such a way as to provide for the maximum imposed loadings. A ring beam is provided at the base of the skirt to spread the tank loads on the foundation ring and provide for anchor bolting. Typical anchorage details are shown in the Secondary Containment Design document.
If in an area subject to flooding, the tank is anchored.	Y	24590-WTP-3PS-MV00-TP001, Rev. 0, Engineering Specification for Pressure Vessel Design and Fabrication.	Buoyant forces of an empty tank in a flooded room are a standard design load case in the specification for Pressure Vessel Design and Fabrication.
Tank system will withstand the effects of frost heave.	Y	24590-PTF-3YD-PWD-00001, Rev. 0, System Description for Plant Wash and Disposal System PWD and Radioactive Liquid Waste Disposal System RLD.	The Ultimate Overflow Vessel (PWD-VSL-00033) is located in a cell at the (-) 45'-0" elevation in the Pretreatment Plant. This location is below the annual frost line.

PRETREATMENT WASTE TANK (PWD) EL (-) 45'-0" (Ultimate Overflow Vessel -00033) COGEMA-IA-009, Rev. 1			
Information assessed	Y/N	Source of Information	Assessment
Characteristics of the waste to be stored or treated have been identified (ignitability, reactivity, toxicity, pH range, specific gravity, vapor pressure, flash point, storage temperature)	Y	24590-WTP-PSAR-ESH-01-002-02, Rev. 0, Preliminary Safety Analysis Report to Support Construction Authorization; PT Facility Specific Information; 24590-PTF-3YD-PWD-00001, Rev. 0, System Description for Plant Wash and Disposal System PWD and Radioactive Liquid Waste Disposal System RLD; 24590-PTF-MV-PWD-P0001001, Rev. 1, EQUIPMENT ASSEMBLY ULTIMATE OVERFLOW VESSEL PWD-VSL-00033 (Q) SHEET 1 OF 2; 24590-PTF-MV-PWD-P0001002, Rev. 1, EQUIPMENT ASSEMBLY ULTIMATE OVERFLOW VESSEL PWD-VSL-00033 (Q) SHEET 2 OF 2; Mechanical Systems Data Sheet 24590-PTF-MVD-PWD-P0001, Rev. 1, PLANT ITEM No. 24590-PTF-MV-PWD-VSL-00033; VESSEL/TANK MATERIAL SELECTION DATA SHEET, 24590-PTF-N1D-PWD-P0005, Rev. 1, PWD-VSL-00033 (PTF) Ultimate Overflow Vessel.	Based on the Mechanical Systems Data Sheet operating parameters are: Design specific gravity 1.57, Operating temperature 160 °F, Vessel design temperature 185 °F, Internal operating pressure 0 psig, Internal design pressure 15 psig, External operating pressure 0.22 psig, External vessel design condition full vacuum in the tank. The System Description identifies that vessel PWD-VSL-00033 functions to receive and transfer laboratory drains, secondary containment drains for transfer lines, and all Pretreatment overflows. The tank's primary safety functions are to provide containment for potential high level mixed waste overflow streams and control of hydrogen build-up in the tank head space. The hydrogen mitigation funtion is provided by internal ancillary equipment (Pulse Jet Mixers), an air in-bleed system to dilute hydrogen generated through radiolysis, and the PTF Process Vessel Vent System which provides offgas control for the tank. Grounding lugs are included in the tank design to protect against static buildup and discharge. The Vessel/Tank Material Selection Data Sheet states that wastes in PWD-VSL-00033 are expected to be around pH 8 during normal operations and may range from acid to alkaline and include acid conditions with elevated halides and temperatures.
Tank is designed to store or treat the wastes with the characteristics defined above and any treatment reagents.	Y	24590-PTF-3YD-PWD-00001, Rev. 0, System Description for Plant Wash and Disposal System PWD and Radioactive Liquid Waste Disposal System RLD;	The System Description document does not identify any treatment reagents that will be used in this tank during normal operations. Vessel PWD-VSL-00033 is equipped with spray rings to allow for acid and caustic flushes for tank internal maintenance.

PRETREATMENT WASTE TANK (PWD) EL (-) 45'-0" (Ultimate Overflow Vessel -00033) COGEMA-IA-009, Rev. 1			
Information assessed	Y/N	Source of Information	Assessment
The waste types are compatible with each other.	Y	24590-PTF-3YD-PWD-00001, Rev. 0, System Description for Plant Wash and Disposal System PWD and Radioactive Liquid Waste Disposal System RLD; VESSEL/TANK MATERIAL SELECTION DATA SHEET, 24590-PTF-N1D-PWD-P0005, Rev. 1, PWD-VSL-00033 (PTF) Ultimate Overflow Vessel.	The Ultimate Overflow Vessel (PWD-VSL-00033) receives laboratory and other drains and plant overflows. All potential sources of inflows to vessel PWD-VSL-00033 are tabulated in the System Description. This includes both normal and abnormal operations. The range of chemistries for the potential inflows is considered in the Vessel/Tank Material Selection Data Sheet where 316L stainless steel with a maximum carbon content of 0.030% is selected (dual certified) for the tank primary containment. Normal operating conditions are considered to range from acidic to alkaline. Alkaline conditions may exist at elevated temperatures. Acid conditions with elevated halides and temperatures were also considered.
Tank material and protective coatings ensure the tank structure is adequately protected from the corrosive effects of the waste stream and external environments (expected to not leak or fail for the design life of the system)	Y	24590-PTF-3YD-PWD-00001, Rev. 0, System Description for Plant Wash and Disposal System PWD and Radioactive Liquid Waste Disposal System RLD; Mechanical Systems Data Sheet 24590-PTF-MVD-PWD-P0001, Rev. 1, PLANT ITEM No. 24590-PTF-MV-PWD-VSL-00033; VESSEL/TANK MATERIAL SELECTION DATA SHEET, 24590-PTF-N1D-PWD-P0005, Rev. 1, PWD-VSL-00033 (PTF) Ultimate Overflow Vessel.	The materials selected for the tank on the Mechanical Systems Data Sheet are of the same type as the minimum recommended material listed in the Vessel/Tank Material Selection Data Sheet for the vessel PWD-VSL-00033. Design life for the tank is specified as 40 years on the Mechanical Systems Data Sheet. The material selected for the primary tank boundary and all internal ancillary equipment is 316L stainless steel (maximum 0.030% Carbon, dual certified). Wastes in the Ultimate Overflow Vessel are expected to range from acidic to alkaline.

PRETREATMENT WASTE TANK (PWD) EL (-) 45'-0" (Ultimate Overflow Vessel -00033) COGEMA-IA-009, Rev. 1			
Information assessed	Y/N	Source of Information	Assessment
Corrosion allowance is adequate for the intended service life of the tank.	Y	24590-PTF-3YD-PWD-00001, Rev. 0, System Description for Plant Wash and Disposal System PWD and Radioactive Liquid Waste Disposal System RLD; 24590-WTP-3PS-MV00-TP001, Rev. 0, Engineering Specification for Pressure Vessel Design and Fabrication; Mechanical Systems Data Sheet 24590-PTF-MVD-PWD-P0001, Rev. 1, PLANT ITEM No. 24590-PTF-MV-PWD-VSL-00033; VESSEL/TANK MATERIAL SELECTION DATA SHEET, 24590-PTF-N1D-PWD-P0005, Rev. 1, PWD-VSL-00033 (PTF) Ultimate Overflow Vessel.	The Vessel/Tank Material Selection Data Sheet for vessel PWD-VSL-00033 identifies 316L stainless steel with a 0.080 inch corrosion allowance as an acceptable material for a 40 year design life. 316L stainless steel (maximum 0.030% Carbon, dual certified) has been identified in the Material Selection Data Sheet as the minimum recommended material for resistance to stress corrosion cracking, crevice corrosion, and pitting corrosion under normal conditions. The materials chosen, welding processes selected, surface preparation, and preservice inspections are appropriate for a combined acid/caustic waste service. For tank ancillary equipment inside the tank, the Pressure Vessel Design and Fabrication specification requires that the corrosion allowance be applied to each surface exposed to process vapors or liquids. For example, the Pulse Jet Mixers shall have the corrosion allowance applied to both internal and external surfaces.
Pressure controls (vents and relief valves) are adequately designed to ensure pressure relief if normal operating pressures in the tank are exceeded.	Y	24590-PTF-M5-V17T-P0022002, Rev. 0, PROCESS FLOW DIAGRAM PRETREATMENT PLANT WASH AND DRAIN SYSTEM PWD; 24590-PTF-MV-PWD-P0001001, Rev. 1, EQUIPMENT ASSEMBLY ULTIMATE OVERFLOW VESSEL PWD-VSL-00033 (Q) SHEET 1 OF 2; 24590-PTF-MV-PWD-P0001002, Rev. 1, EQUIPMENT ASSEMBLY ULTIMATE OVERFLOW VESSEL PWD-VSL-00033 (Q) SHEET 2 OF 2.	The Ultimate Overflow Vessel (PWD-VSL-00033) receives laboratory and other transfer drains and pretreatment overflows. This tank is also designed to handle the highest overflow rate for any C3/C5 area fire protection system for 30 minutes. The tank is equipped with a 10 in. diameter overflow line that flows first to the HLW Effluent Transfer Vessel (PWD-VSL-00043) and then via an unrestricted overflow line to a sump where the tank is located at elevation (-) 45'-0". The overflow line is equal in diameter to the largest of the inlet lines entering the tank to ensure it can handle the expected flows.
ID = Internal Diameter OD = Outside Diameter N/A = Not Applicable psig = pounds per square inch gage Y=Yes N=No			

PRETREATMENT WASTE TANK (PWD) EL (-) 45'-0" (HLW Effluent Transfer Vessel -00043)			COGEMA-IA-009, Rev. 1
Information assessed	Y/N	Source of Information	Assessment
Tank design standards are appropriate and adequate for the tank's intended use.	Y	24590-PTF-M6-PWD-P0002, Rev. 1, P & ID – PTF PLANT WASH & DISPOSAL SYSTEM EFFLUENT COLLECTION PWD-VSL-00033/00043/00044 (Q); 24590-PTF-MV-PWD-P0003001, Rev. 1, EQUIPMENT ASSEMBLY HLW EFFLUENT TRANSFER VESSEL PWD-VSL-00043 (Q) SHEET 1 OF 2; 24590-PTF-MV-PWD-P0003002, Rev. 1, EQUIPMENT ASSEMBLY HLW EFFLUENT TRANSFER VESSEL PWD-VSL-00043 (Q) SHEET 2 OF 2; Mechanical Systems Data Sheet 24590-PTF-MVD-PWD-P0003, Rev. 1, PLANT ITEM No. 24590-PTF-MV-PWD-VSL-00043 24590-WTP-3PS-MV00-TP001, Rev. 0, Engineering Specification for Pressure Vessel Design and Fabrication; 24590-WTP-3PS-MV00-TP003, Rev. 1, Engineering Specification for Pressure Vessel Fatigue Analysis.	The High Level Waste (HLW) Transfer Vessel (PWD-VSL-00043) and all appurtenances are to be designed to ASME Section VIII, Division I rules which are appropriate for an unfired pressure vessel operating with aqueous mixed waste solutions over the pressure and temperature range specified for this vessel. Supplementary requirements are specified in the Engineering Specification for Pressure Vessel Design and Fabrication. These supplementary requirements address pressure vessel fatigue analysis, positive material identification, standard fabrication tolerances, acceptable welding procedures for the tank and appurtenances, welder qualifications and testing records, NDE inspections and records, quality assurance requirements, and packaging, shipping, handling and storage requirements. Some of the tank internal equipment is subject to cyclic loading. The pulse jet mixer design pressure pulses and the number of lifetime cycles are conservative. The fatigue design standards (ASME Section VIII, Division 2) are appropriate for components with a high number of load cycles. These are acceptable codes and standards. The HLW Transfer Vessel (PWD-VSL-00043) is a vertical tank with a 288 in. ID and a vertical length of 89 in. tangent to tangent supported on a cylindrical skirt. Top and bottom heads are flanged and dished torispherical heads. The shell and heads are to have a minimum thickness of 1 inch. Materials for the shell, heads and internals are to be SA-240 316L stainless steel. The operating volume is to be about 29,580 gallons and the total volume is to be about 41,650 gallons.

PRETREATMENT WASTE TANK (PWD) EL (-) 45'-0" (HLW Effluent Transfer Vessel -00043) COGEMA-IA-009, Rev. 1			
Information assessed	Y/N	Source of Information	Assessment
If a non-standard tank is to be used, the design calculations demonstrate sound engineering principles of construction.	N/A	24590-WTP-3PS-MV00-TP001, Rev. 0, Engineering Specification for Pressure Vessel Design and Fabrication.	The Engineering Specification for Pressure Vessel Design and Fabrication requires that the ASME Section VIII, Division 1 vessels (PWD-VSL-00043) be delivered after design, fabrication, inspection and testing with an ASME U stamp and that the tank be registered with the National Board. It is a shop fabricated tank for mixed waste service in the Pretreatment Facility. As discussed in the item immediately above, the tank design standards are appropriate and adequate for the tank's intended use.
Tank has adequate strength, after consideration of the corrosion allowance, to withstand the operating pressure, operating temperature, and seismic loads.	Y	24590-WTP-3PS-MV00-TP001, Rev. 0, Engineering Specification for Pressure Vessel Design and Fabrication; 24590-WTP-3PS-MV00-TP002, Rev. 1, Engineering Specification for Seismic Qualification Criteria for Pressure Vessels; 24590-WTP-3PI-SS90-T0001, Rev. 0, Seismic Qualification of Seismic Category I/II Equipment and Tanks; 24590-PTF-MV-PWD-P0003001, Rev. 1, EQUIPMENT ASSEMBLY HLW EFFLUENT TRANSFER VESSEL PWD-VSL-00043 (Q) SHEET 1 OF 2; 24590-PTF-MV-PWD-P0003002, Rev. 1, EQUIPMENT ASSEMBLY HLW EFFLUENT TRANSFER VESSEL PWD-VSL-00043 (Q) SHEET 2 OF 2; Mechanical Systems Data Sheet 24590-PTF-MVD-PWD-P0003, Rev. 1, PLANT ITEM No. 24590-PTF-MV-PWD-VSL-00043.	The Engineering Specification for Pressure Vessel Design and Fabrication requires specific consideration of the operating pressures and temperatures, seismic loads, and corrosion in the design process in accordance with the requirements of ASME Section VIII, Div. I for the vessel and internal ancillary equipment. Supplementary design criteria are specified in the Engineering Specifications for Seismic Qualification Criteria for Pressure Vessels and Seismic Qualification of Seismic Category I/II Equipment and Tanks to provide for the seismic design analysis. The Mechanical Systems Data Sheet identifies the tank operating pressure and temperature ranges and the requirement for seismic qualification in the design and specifies SA-240 316L stainless steel as the shell and head materials. The assembly drawings specify a 1 in. minimum thickness for the tank shell and heads.

PRETREATMENT WASTE TANK (PWD) EL (-) 45'-0" (HLW Effluent Transfer Vessel -00043) COGEMA-IA-009, Rev. 1			
Information assessed	Y/N	Source of Information	Assessment
Tank foundation will maintain the load of a full tank.	Y	24590-WTP-3PS-MV00-TP001, Rev. 0, Engineering Specification for Pressure Vessel Design and Fabrication; 24590-WTP-PER-CSA-02-001, Rev. 3, Secondary Containment Design; 24590-PTF-MV-PWD-P0003001, Rev. 1, EQUIPMENT ASSEMBLY HLW EFFLUENT TRANSFER VESSEL PWD-VSL-00043 (Q) SHEET 1 OF 2; 24590-PTF-MV-PWD-P0003002, Rev. 1, EQUIPMENT ASSEMBLY HLW EFFLUENT TRANSFER VESSEL PWD-VSL-00043 (Q) SHEET 2 OF 2.	The HLW Effluent Transfer Vessel (PWD-VSL-00043) is supported by a cylindrical skirt. The fabricator will determine the skirt thickness based on the design requirements in the Engineering Specification for Pressure Vessel Design and Fabrication. It is a general requirement of ASME VIII, Division 1 that vessels shall be so supported and the supporting members shall be arranged and/or attached to the vessel wall in such a way as to provide for the maximum imposed loadings. A ring beam is provided at the base of the skirt to spread the tank loads on the foundation ring and provide for anchor bolting. Typical anchorage details are shown in the Secondary Containment Design document.
If in an area subject to flooding, the tank is anchored.	Y	24590-WTP-3PS-MV00-TP001, Rev. 0, Engineering Specification for Pressure Vessel Design and Fabrication.	Buoyant forces of an empty tank in a flooded room are a standard design load case in the specification for Pressure Vessel Design and Fabrication.
Tank system will withstand the effects of frost heave.	Y	24590-PTF-3YD-PWD-00001, Rev. 0, System Description for Plant Wash and Disposal System PWD and Radioactive Liquid Waste Disposal System RLD.	The HLW Effluent Transfer Vessel (PWD-VSL-00043) is located in a cell at the (-) 45'-0" elevation in the Pretreatment Facility. This location is below the annual frost line.

PRETREATMENT WASTE TANK (PWD) EL (-) 45'-0" (HLW Effluent Transfer Vessel -00043) COGEMA-IA-009, Rev. 1			
Information assessed	Y/N	Source of Information	Assessment
Characteristics of the waste to be stored or treated have been identified (ignitability, reactivity, toxicity, pH range, specific gravity, vapor pressure, flash point, storage temperature)	Y	24590-WTP-PSAR-ESH-01-002-02, Rev. 0, Preliminary Safety Analysis Report to Support Construction Authorization; PT Facility Specific Information; 24590-PTF-3YD-PWD-00001, Rev. 0, System Description for Plant Wash and Disposal System PWD and Radioactive Liquid Waste Disposal System RLD; 24590-PTF-MV-PWD-P0003001, Rev. 1, EQUIPMENT ASSEMBLY HLW EFFLUENT TRANSFER VESSEL PWD-VSL-00043 (Q) SHEET 1 OF 2; 24590-PTF-MV-PWD-P0003002, Rev. 1, EQUIPMENT ASSEMBLY HLW EFFLUENT TRANSFER VESSEL PWD-VSL-00043 (Q) SHEET 2 OF 2; Mechanical Systems Data Sheet 24590-PTF-MVD-PWD-P0003, Rev. 1, PLANT ITEM No. 24590-PTF-MV-PWD-VSL-00043; VESSEL/TANK MATERIAL SELECTION DATA SHEET, 24590-PTF-N1D-PWD-P0002, Rev. 1, PWD-VSL-00043 (PTF) HLW Effluent Transfer Vessel.	Based on the Mechanical Systems Data Sheet operating parameters are: Design specific gravity 1.57, Operating temperature 160 °F, Vessel design temperature 185 °F, Internal operating pressure 0 psig, Internal design pressure 15 psig, External operating pressure 0.22 psig, External vessel design condition full vacuum in the tank. The System Description identifies that vessel PWD-VSL-00043 functions to receive and store waste from the HLW Vitrification Plant, from the pit sump where the tank is located, and from various line drains. Waste is transferred from PWD-VSL-00043 to the Plant Wash Vessel PWD-VSL-00044 for treatment. The tank's primary safety functions are to provide containment for waste from the HLW Vitrification Plant and control of hydrogen build-up in the tank head space. The hydrogen mitigation function is provided by internal ancillary equipment (Pulse Jet Mixers), an air in-bleed system to dilute hydrogen generated through radiolysis, and the PTF Process Vessel Vent System which provides offgas control for the tank. Grounding lugs are included in the tank design to protect against static buildup and discharge. The Vessel/Tank Material Selection Data Sheet states that wastes in PWD-VSL-00043 are expected to be around pH 8 during normal operations. The tank is equipped with internal wash rings for use of neutral and acid washes for flushing the tank as a maintenance activity.
Tank is designed to store or treat the wastes with the characteristics defined above and any treatment reagents.	Y	24590-PTF-3YD-PWD-00001, Rev. 0, System Description for Plant Wash and Disposal System PWD and Radioactive Liquid Waste Disposal System RLD;	The System Description document does not identify any treatment reagents that will be used in this tank during normal operations. The System Description states that the tank is only used to receive and then transfer wastes. Vessel PWD-VSL-00043 is equipped with spray rings to allow for acid and neutral flushes for tank internal maintenance.

PRETREATMENT WASTE TANK (PWD) EL (-) 45'-0" (HLW Effluent Transfer Vessel -00043) COGEMA-IA-009, Rev. 1			
Information assessed	Y/N	Source of Information	Assessment
The waste types are compatible with each other.	Y	24590-PTF-3YD-PWD-00001, Rev. 0, System Description for Plant Wash and Disposal System PWD and Radioactive Liquid Waste Disposal System RLD; VESSEL/TANK MATERIAL SELECTION DATA SHEET, 24590-PTF-N1D-PWD-P0002, Rev. 1, PWD-VSL-00043 (PTF) HLW Effluent Transfer Vessel.	The HLW Effluent Transfer Vessel (PWD-VSL-00043) receives and stores waste from the HLW Vitrification Plant. All potential sources of inflows to vessel PWD-VSL-00043 are tabulated in the System Description. This includes both normal and abnormal operations. The range of chemistries for the potential inflows is considered in the Vessel/Tank Material Selection Data Sheet where 316L stainless steel with a maximum carbon content of 0.030% is selected (dual certified) for the tank primary containment. Operating conditions are considered to range from almost neutral pH 8 to acidic conditions.
Tank material and protective coatings ensure the tank structure is adequately protected from the corrosive effects of the waste stream and external environments (expected to not leak or fail for the design life of the system)	Y	24590-PTF-3YD-PWD-00001, Rev. 0, System Description for Plant Wash and Disposal System PWD and Radioactive Liquid Waste Disposal System RLD; Mechanical Systems Data Sheet 24590-PTF-MVD-PWD-P0003, Rev. 1, PLANT ITEM No. 24590-PTF-MV-PWD-VSL-00043; VESSEL/TANK MATERIAL SELECTION DATA SHEET, 24590-PTF-N1D-PWD-P0002, Rev. 1, PWD-VSL-00043 (PTF) HLW Effluent Transfer Vessel.	The materials selected for the tank on the Mechanical Systems Data Sheet are of the same type as the minimum recommended material listed in the Vessel/Tank Material Selection Data Sheet for the vessel PWD-VSL-00043. Design life for the tank is specified as 40 years on the Mechanical Systems Data Sheet. The material selected for the primary tank boundary and all internal ancillary equipment is 316L stainless steel (maximum 0.030% Carbon, dual certified). Wastes in the HLW Effluent Transfer Vessel are expected to range from neutral pH to acidic conditions.

PRETREATMENT WASTE TANK (PWD) EL (-) 45'-0" (HLW Effluent Transfer Vessel -00043) COGEMA-IA-009, Rev. 1			
Information assessed	Y/N	Source of Information	Assessment
Corrosion allowance is adequate for the intended service life of the tank.	Y	24590-PTF-3YD-PWD-00001, Rev. 0, System Description for Plant Wash and Disposal System PWD and Radioactive Liquid Waste Disposal System RLD; 24590-WTP-3PS-MV00-TP001, Rev. 0, Engineering Specification for Pressure Vessel Design and Fabrication; Mechanical Systems Data Sheet 24590-PTF-MVD-PWD-P0003, Rev. 1, PLANT ITEM No. 24590-PTF-MV-PWD-VSL-00043; VESSEL/TANK MATERIAL SELECTION DATA SHEET, 24590-PTF-N1D-PWD-P0002, Rev. 1, PWD-VSL-00043 (PTF) HLW Effluent Transfer Vessel.	The Vessel/Tank Material Selection Data Sheet for vessel PWD-VSL-00043 identifies 316L stainless steel with a 0.080 inch corrosion allowance as an acceptable material for a 40 year design life. 316L stainless steel (maximum 0.030% Carbon, dual certified) has been identified in the Material Selection Data Sheet as the minimum recommended material for resistance to stress corrosion cracking, crevice corrosion, and pitting corrosion under normal conditions. The materials chosen, welding processes selected, surface preparation, and preservice inspections are adequate and appropriate for waste service ranging from almost neutral pH 8 to acidic conditions. For tank ancillary equipment inside the tank, the Pressure Vessel Design and Fabrication specification requires that the corrosion allowance be applied to each surface exposed to process vapors or liquids. For example, the Pulse Jet Mixers shall have the corrosion allowance applied to both internal and external surfaces.
Pressure controls (vents and relief valves) are adequately designed to ensure pressure relief if normal operating pressures in the tank are exceeded.	Y	24590-PTF-M5-V17T-P0022002, Rev. 0, PROCESS FLOW DIAGRAM PRETREATMENT PLANT WASH AND DRAIN SYSTEM PWD; 24590-PTF-MV-PWD-P0003001, Rev. 1, EQUIPMENT ASSEMBLY HLW EFFLUENT TRANSFER VESSEL PWD-VSL-00043 (Q) SHEET 1 OF 2; 24590-PTF-MV-PWD-P0003002, Rev. 1, EQUIPMENT ASSEMBLY HLW EFFLUENT TRANSFER VESSEL PWD-VSL-00043 (Q) SHEET 2 OF 2.	The HLW Effluent Transfer Vessel (PWD-VSL-00043) receives and stores waste from the HLW Vitrification Plant. This tank is also designed to handle the highest overflow rate for any C3/C5 area fire protection system for 30 minutes because the overflow is coupled to Tank PWD-VSL-00033 overflows with an overflow transfer line. The tank is equipped with a 10 in. diameter overflow line that matches the size of the overflow transfer line from Tank PWD-VSL-00033 and exceeds the size of all other inlet lines entering the tank. The overflow is via an unrestricted overflow line to a sump where the tank is located at elevation (-) 45'-0".
ID = Internal Diameter OD = Outside Diameter N/A = Not Applicable psig = pounds per square inch gage Y=Yes N=No			

PRETREATMENT WASTE TANK (PWD) EL (-) 19'-0" (C3 Floor Drain Collection Vessel -00046) COGEMA-IA-009, Rev. 1			
Information assessed	Y/N	Source of Information	Assessment
Tank design standards are appropriate and adequate for the tank's intended use.	Y	24590-PTF-M6-PWD-P0043, Rev. 1, P & ID – PTF PLANT WASH & DISPOSAL SYSTEM C3 AREA FLOOR DRAINS; 24590-PTF-MV-PWD-P0005, Rev. 1, EQUIPMENT ASSEMBLY C3 FLOOR DRAIN COLLECTION VESSEL PWD-VSL-00046; Mechanical Systems Data Sheet 24590-PTF-MVD-PWD-P0010, Rev. 1, PLANT ITEM No. 24590-PTF-MV-PWD-VSL-00046; 24590-WTP-3PS-MV00-TP001, Rev. 0, Engineering Specification for Pressure Vessel Design and Fabrication.	The C3 Floor Drain Collection Vessel (PWD-VSL-00046) and all appurtenances are to be designed to ASME Section VIII, Division I rules which are appropriate for an unfired pressure vessel operating with aqueous mixed waste solutions over the pressure and temperature range specified for this vessel. Supplementary requirements are specified in the Engineering Specification for Pressure Vessel Design and Fabrication. These supplementary requirements address positive material identification, standard fabrication tolerances, acceptable welding procedures for the tank and appurtenances, welder qualifications and testing records, NDE inspections and records, quality assurance requirements, and packaging, shipping, handling and storage requirements. These are acceptable codes and standards. The C3 Floor Drains Collection Vessel (PWD-VSL-00046) is a horizontal tank with a 96 in. ID and a horizontal length of 126 in. tangent to tangent supported on two saddle supports. The heads are ASME 2:1 elliptical heads. The shell and heads are to have a minimum thickness of 7/16 inch. Materials for the shell, heads and internals are to be SA-240 316L stainless steel. The operating volume is to be about 4792 gallons and the total volume is to be about 4982 gallons.
If a non-standard tank is to be used, the design calculations demonstrate sound engineering principles of construction.	N/A	24590-WTP-3PS-MV00-TP001, Rev. 0, Engineering Specification for Pressure Vessel Design and Fabrication.	The Engineering Specification for Pressure Vessel Design and Fabrication requires that the ASME Section VIII, Division 1 vessels (PWD-VSL-00046) be delivered after design, fabrication, inspection and testing with an ASME U stamp and that the tank be registered with the National Board. It is a shop fabricated tank for mixed waste service in the Pretreatment Facility. As discussed in the item immediately above, the tank design standards are appropriate and adequate for the tank's intended use.

PRETREATMENT WASTE TANK (PWD) EL (-) 19'-0" (C3 Floor Drain Collection Vessel -00046) COGEMA-IA-009, Rev. 1			
Information assessed	Y/N	Source of Information	Assessment
Tank has adequate strength, after consideration of the corrosion allowance, to withstand the operating pressure, operating temperature, and seismic loads.	Y	24590-WTP-3PS-MV00-TP001, Rev. 0, Engineering Specification for Pressure Vessel Design and Fabrication; 24590-WTP-3PS-MV00-TP002, Rev. 1, Engineering Specification for Seismic Qualification Criteria for Pressure Vessels; 24590-WTP-3PI-FB01-T0001, Rev.0, Engineering Specification for Structural Design Loads for Seismic Category III and IV Equipment and Tanks; 24590-PTF-MV-PWD-P0005, Rev. 1, EQUIPMENT ASSEMBLY C3 FLOOR DRAIN COLLECTION VESSEL PWD-VSL-00046; Mechanical Systems Data Sheet 24590-PTF-MVD-PWD-P0010, Rev. 1, PLANT ITEM No. 24590-PTF-MV-PWD-VSL-00046.	The Engineering Specification for Pressure Vessel Design and Fabrication requires specific consideration of the operating pressures and temperatures, seismic loads, and corrosion in the design process in accordance with the requirements of ASME Section VIII, Div. I for the vessel and internal ancillary equipment. Supplementary design criteria are specified in the Engineering Specifications for Seismic Qualification Criteria for Pressure Vessels and Structural Design Loads for Seismic Category III and IV Equipment and Tanks to provide for the seismic design analysis. The Mechanical Systems Data Sheet identifies the tank operating pressure and temperature ranges and the requirement for seismic qualification in the design and specifies SA-240 316L stainless steel as the shell and head materials. The assembly drawing specifies a 7/16 in. minimum thickness for the tank shell and heads.
Tank foundation will maintain the load of a full tank.	Y	24590-WTP-3PS-MV00-TP001, Rev. 0, Engineering Specification for Pressure Vessel Design and Fabrication; 24590-WTP-PER-CSA-02-001, Rev. 3, Secondary Containment Design; 24590-PTF-MV-PWD-P0005, Rev. 1, EQUIPMENT ASSEMBLY C3 FLOOR DRAIN COLLECTION VESSEL PWD-VSL-00046;	The horizontal C3 Floor Drain Collection Vessel (PWD-VSL-00046) is supported by two saddle supports. The fabricator will determine the saddle support thickness and dimensions based on the design requirements in the Engineering Specification for Pressure Vessel Design and Fabrication. Typical anchorage details for the saddle supports are shown in the Secondary Containment Design document. It is a general requirement of ASME VIII, Division 1 that vessels shall be so supported and the supporting members shall be arranged and/or attached to the vessel wall in such a way as to provide for the maximum imposed loadings.
If in an area subject to flooding, the tank is anchored.	Y	24590-WTP-3PS-MV00-TP001, Rev. 0, Engineering Specification for Pressure Vessel Design and Fabrication.	Buoyant forces of an empty tank in a flooded room are a standard design load case in the specification for Pressure Vessel Design and Fabrication.

PRETREATMENT WASTE TANK (PWD) EL (-) 19'-0" (C3 Floor Drain Collection Vessel -00046) COGEMA-IA-009, Rev. 1			
Information assessed	Y/N	Source of Information	Assessment
Tank system will withstand the effects of frost heave.	Y	24590-PTF-3YD-PWD-00001, Rev. 0, System Description for Plant Wash and Disposal System PWD and Radioactive Liquid Waste Disposal System RLD.	The C3 Floor Drain Collection Vessel (PWD-VSL-00046) is located in a cell at the (-) 19'-0" elevation in the Pretreatment Facility. This location is below the annual frost line.
Characteristics of the waste to be stored or treated have been identified (ignitability, reactivity, toxicity, pH range, specific gravity, vapor pressure, flash point, storage temperature)	Y	24590-WTP-PSAR-ESH-01-002-02, Rev. 0, Preliminary Safety Analysis Report to Support Construction Authorization; PT Facility Specific Information; 24590-PTF-3YD-PWD-00001, Rev. 0, System Description for Plant Wash and Disposal System PWD and Radioactive Liquid Waste Disposal System RLD; 24590-PTF-MV-PWD-P0005, Rev. 1, EQUIPMENT ASSEMBLY C3 FLOOR DRAIN COLLECTION VESSEL PWD-VSL-00046; Mechanical Systems Data Sheet 24590-PTF-MVD-PWD-P0010, Rev. 1, PLANT ITEM No. 24590-PTF-MV-PWD-VSL-00046; VESSEL/TANK MATERIAL SELECTION DATA SHEET, 24590-PTF-N1D-PWD-P0006, Rev. 1, PWD-VSL-00046 (PTF) C3 Floor Drain Collection Vessel.	Based on the Mechanical Systems Data Sheet operating parameters are: Design specific gravity 1.12, Operating temperature 200 °F, Vessel design temperature 225 °F, Internal operating pressure 58 psig, Internal design pressure 68 psig, External operating pressure 4.5 psig, External vessel design condition full vacuum in the tank. The System Description identifies that vessel PWD-VSL-00046 functions to receive floor drains from all C3 areas in the PT facility generated from normal cleanup activities or small leaks. This tank also receives all sprinkler water discharges from the C3 areas fire protection systems. Sprinkler discharges may overflow the tank and fill the pit in which the tank is located. The pit is sized to safely contain the sprinkler volume. No waste treatment activities are conducted in PWD-VSL-00046. The System Description states that the tank provides no important to safety functions. During normal operations the tank will receive domestic water mixed with small quantities of caustic or nitric acid as noted in the Vessel/Tank Material Selection Data Sheet. Grounding lugs are included in the tank design for corrosion protection.
Tank is designed to store or treat the wastes with the characteristics defined above and any treatment reagents.	Y	24590-PTF-3YD-PWD-00001, Rev. 0, System Description for Plant Wash and Disposal System PWD and Radioactive Liquid Waste Disposal System RLD;	The System Description document does not identify any treatment reagents that will be used in this tank during normal operations. The System Description states that the tank is only used to receive and then transfer wastes C3 floor drain wastes.

PRETREATMENT WASTE TANK (PWD) EL (-) 19'-0" (C3 Floor Drain Collection Vessel -00046) COGEMA-IA-009, Rev. 1			
Information assessed	Y/N	Source of Information	Assessment
The waste types are compatible with each other.	Y	24590-PTF-3YD-PWD-00001, Rev. 0, System Description for Plant Wash and Disposal System PWD and Radioactive Liquid Waste Disposal System RLD; VESSEL/TANK MATERIAL SELECTION DATA SHEET, 24590-PTF-N1D-PWD-P0006, Rev. 1, PWD-VSL-00046 (PTF) C3 Floor Drain Collection Vessel.	The C3 Floor Drain Collection Vessel (PWD-VSL-00046) receives and stores waste from the PT facility C3 areas floor drains. All potential sources of inflows to vessel PWD-VSL-00046 are tabulated in the System Description. This includes both normal and abnormal operations. The range of chemistries for the potential inflows is considered in the Vessel/Tank Material Selection Data Sheet where 316L stainless steel with a maximum carbon content of 0.030% is selected (dual certified) for the tank primary containment.
Tank material and protective coatings ensure the tank structure is adequately protected from the corrosive effects of the waste stream and external environments (expected to not leak or fail for the design life of the system)	Y	24590-PTF-3YD-PWD-00001, Rev. 0, System Description for Plant Wash and Disposal System PWD and Radioactive Liquid Waste Disposal System RLD; Mechanical Systems Data Sheet 24590-PTF-MVD-PWD-P0010, Rev. 1, PLANT ITEM No. 24590-PTF-MV-PWD-VSL-00046; VESSEL/TANK MATERIAL SELECTION DATA SHEET, 24590-PTF-N1D-PWD-P0006, Rev. 1, PWD-VSL-00046 (PTF) C3 Floor Drain Collection Vessel.	The materials selected for the tank on the Mechanical Systems Data Sheet are of the same type as the minimum recommended material listed in the Vessel/Tank Material Selection Data Sheet for the C3 Floor Drain Collection Vessel (PWD-VSL-00046). Design life for the tank is specified as 40 years on the Mechanical Systems Data Sheet. The material selected for the primary tank boundary and all internal ancillary equipment is 316L stainless steel (maximum 0.030% Carbon, dual certified). During normal operations, wastes in vessel PWD-VSL-00046 are expected to be domestic water with small amounts of either nitric acid or caustic..

PRETREATMENT WASTE TANK (PWD) EL (-) 19'-0" (C3 Floor Drain Collection Vessel -00046) COGEMA-IA-009, Rev. 1			
Information assessed	Y/N	Source of Information	Assessment
Corrosion allowance is adequate for the intended service life of the tank.	Y	24590-PTF-3YD-PWD-00001, Rev. 0, System Description for Plant Wash and Disposal System PWD and Radioactive Liquid Waste Disposal System RLD; 24590-WTP-3PS-MV00-TP001, Rev. 0, Engineering Specification for Pressure Vessel Design and Fabrication; Mechanical Systems Data Sheet 24590-PTF-MVD-PWD-P0010, Rev. 1, PLANT ITEM No. 24590-PTF-MV-PWD-VSL-00046; VESSEL/TANK MATERIAL SELECTION DATA SHEET, 24590-PTF-N1D-PWD-P0006, Rev. 1, PWD-VSL-00046 (PTF) C3 Floor Drain Collection Vessel.	The Vessel/Tank Material Selection Data Sheet for vessel PWD-VSL-00046 identifies 316L stainless steel with a 0.04 inch corrosion allowance as an acceptable material for a 40 year design life. 316L stainless steel (maximum 0.030% Carbon, dual certified) has been identified in the Material Selection Data Sheet as the minimum recommended material for resistance to stress corrosion cracking, crevice corrosion, and pitting corrosion under normal conditions. The materials chosen, welding processes selected, surface preparation, and preservice inspections are adequate and appropriate for waste service ranging from neutral pH 7 to slightly acidic or caustic conditions.
Pressure controls (vents and relief valves) are adequately designed to ensure pressure relief if normal operating pressures in the tank are exceeded.	Y	24590-PTF-M6-PWD-P0043, Rev. 1, P & ID – PTF PLANT WASH & DISPOSAL SYSTEM C3 AREA FLOOR DRAINS; 24590-PTF-MV-PWD-P0005, Rev. 1, EQUIPMENT ASSEMBLY C3 FLOOR DRAIN COLLECTION VESSEL PWD-VSL-00046.	The C3 Floor Drain Collection Vessel (PWD-VSL-00046) receives floor drains from all C3 areas in the PT facility generated from normal cleanup activities or small leaks. This tank also receives all sprinkler water discharges from the C3 areas fire protection systems. Sprinkler discharges may overflow the tank and fill the pit in which the tank is located. The tank is equipped with a 6 in. diameter overflow line that matches the size of the floor drain lines in each of the PTF C3 areas. The overflow is via an unrestricted overflow line to the pit floor where the tank is located at elevation (-) 19'-0".
ID = Internal Diameter OD = Outside Diameter N/A = Not Applicable psig = pounds per square inch gage Y=Yes N=No			

MASTER DISTRIBUTION SCHEDULE

Project Name: RPP-WTP

Document Distribution: 24590-CM-HC4-HXYG-00138

Document Number: **Revision:**

Insert rows as necessary ↑

Name	MSIN	Controlled	Uncontrolled	Size				Comments
				8 ½ x 11	11 x 17	Full	As Is	
Dan Pfluger	MS4-E2							LEAD REVIEWER
Brad Erlundson								Reviewer
Trisha O'Toole								Info

Insert rows as necessary ↑

DAN PFLUGER
Approver's Name (Print)

Approver's Signature

8/27/2002
Date

Bechtel Systems
&
Infrastructure, Inc.

JOB No. 24590

SUPPLIER DOCUMENT STATUS

1. [X] WORK MAY PROCEED
2. [ ] REVISE AND RESUBMIT. WORK MAY PROCEED SUBJECT TO RESOLUTION OF INDICATED COMMENTS
3. [ ] REVISE AND RESUBMIT. WORK MAY NOT PROCEED
4. [ ] REVIEW NOT REQUIRED. WORK MAY PROCEED.

PERMISSION TO PROCEED DOES NOT CONSTITUTE ACCEPTANCE OR APPROVAL OF DESIGN DETAILS, CALCULATIONS, ANALYSES, TEST METHODS, OR MATERIALS DEVELOPED OR SELECTED BY THE SUPPLIER AND DOES NOT RELIEVE SUPPLIER FROM FULL COMPLIANCE WITH CONTRACTUAL OBLIGATIONS.

	M	P	ML	H	MH	E	C&I	CS&A	PD	PT	ESH
REVIEWED											HW

G-321 DOCUMENT CATEGORY N/A
[From Supplement A to G-321-E (E) or G-321-V (V), as applicable]

RESPONSIBLE ENGINEER DCPfluger DATE 6/27/03

24590-CM-HC4-HXYG-00138-01-13
REV. 00A

SUBCONTRACT SUBMITTAL

6/30/03 7-1-03
(B) [ ] Processed/ Data Entry [X] Copied/ QA [ ] Scanned [ ] Filed
(A) KS 6/27/03
(C) VT 6/30/03

COGEMA-IA-016, Rev. 1

R10081969

RPP-WTP
RECEIVED
JUN 27 2003
BY PDC

STRUCTURAL INTEGRITY ASSESSMENT OF THE PRETREATMENT FACILITY (PTF) ELEVATION 28'-0" SECONDARY CONTAINMENT

"I, John T. Baxter have reviewed, and certified a portion of the design of a new tank system or component located at the Hanford Waste Treatment Plant, owned/operated by Department of Energy, Office of River Protection, Richland, Washington. My duties were independent review of the current design for the Pretreatment Facility (PTF) Elevation 28'-0" Secondary Containment as required by The Dangerous Waste Regulations, namely, WAC 173-303-640(3) applicable paragraphs (i.e., (a) through (g))."

"I certify under penalty of law that I have personally examined and am familiar with the information submitted in this document and all attachments and that, based on my inquiry of those individuals immediately responsible for obtaining the information, I believe that the information is true, accurate, and complete. I am aware that there are significant penalties for submitting false information, including the possibility of fine and imprisonment."

The documentation reviewed indicate that the design intent fully satisfies the requirements of the WAC.

The attached review is 8 sheets numbered 1 through 8.

JOHN T. BAXTER
STATE OF WASHINGTON
18978
REGISTERED
PROFESSIONAL ENGINEER

EXPIRES: 10/28/04

John T. Baxter 06/26/2003
Signature Date

6-27-03
Processed/ Data Entry | Copied/ QA | Scanned | Filed
(A) SD 6/27/03
(C)

24590-CM-HC4-HXYG-00138-01-13, REV. 00A

STRUCTURAL INTEGRITY ASSESSMENT OF THE PRETREATMENT FACILITY (PTF) ELEVATION 28'-0" SECONDARY CONTAINMENT

COGEMA-IA-016
REV. 1

Please note that source, special nuclear and byproduct materials, as defined in the Atomic Energy Act of 1954 (AEA), are regulated at the U.S. Department of Energy (DOE) facilities exclusively by DOE acting pursuant to its AEA authority. DOE asserts, that pursuant to the AEA, it has sole and exclusive responsibility and authority to regulate source, special nuclear, and byproduct materials at DOE-owned nuclear facilities. Information contained herein on radionuclides is provided for process description purposes only.

Scope	Scope of this Integrity Assessment	This integrity assessment addresses Pretreatment Facility Secondary Containment at Elevation 28'-0" and below. The specific cells considered in this assessment are: P-0201, P-0201A, P-0203, P-0203A, P-0203B, P0204, P-0206, P-0207, P-0208, P-0209, P-0210 and P-0212. A Process Bulge is shown on the drawings; however, integrity assessments for process bulges are included with the ancillary equipment integrity assessments for each process tank and are not part of this assessment.
	Drawings	The drawings are the general arrangement plan at elevation 28'-0" and associated sections. 24590-PTF-P1-P01T-P0002, Rev. 1, PRETREATMENT FACILITY GENERAL ARRANGEMENT PLAN AT EL. 28'-0"; 24590-PTF-P1-P01T-P0007, Rev. 3, PRETREATMENT FACILITY GENERAL ARRANGEMENT SECTION A-A; 24590-PTF-P1-P01T-P0011, Rev. 4, PRETREATMENT FACILITY GENERAL ARRANGEMENT SECTION E-E; 24590-PTF-P1-P01T-P0013, Rev. 3, PRETREATMENT FACILITY GENERAL ARRANGEMENT SECT. H-H AND SECT. J-J; 24590-PTF-P1-P01T-P0014, Rev. 5, PRETREATMENT FACILITY GENERAL ARRANGEMENT SECT. L-L AND SECT. K-K; 24590-PTF-P1-P01T-P0015, Rev. 5, PRETREATMENT FACILITY GENERAL ARRANGEMENT SECT. M-M AND SECT. N-N; 24590-PTF-P1-P01T-P0016, Rev. 3, PRETREATMENT FACILITY GENERAL ARRANGEMENT SECT. P-P AND SECT. Q-Q; 24590-PTF-P1-P01T-P0017, Rev. 3, PRETREATMENT FACILITY GENERAL ARRANGEMENT SECT. R-R; 24590-PTF-M6-PWD-P0043, Rev. 1, P&ID - PTF Plant Wash & Disposal System C3 Area Floor Drains

Summary of Assessment: For each item of "Information Assessed" (i.e., Criteria) on the following pages, the items listed under "Source of Information" were reviewed and found to furnish adequate design controls and requirements to assure the design intent fully satisfies the WAC requirements.

3

	Information Assessed	Source of Information	Discussion
Foundation Design	Description of subsurface conditions and soil bearing capacity are adequate.	24590-WTP-DC-ST-01-001, Rev. 1, Structural Design Criteria; 24590-BOF-3PS-CE01-T0001, Rev. 4, Engineering Specification for Excavation and Backfill; 24590-BOF-3PS-C000-T0001, Rev. 2, Engineering Specification for Material Testing Services; WTSC99-1036-42-17, RPP-WTP Geotechnical Investigation Final Report, Shannon & Wilson, 2000	The Structural Design Criteria adequately presents design guidance for both mat and spread footings based on the geotechnical site investigation for the facility (WTSC99-1036-42-17, Shannon & Wilson, 2000). Bearing capacity and settlement design parameters are furnished for the dense Hanford Upper and Lower Sand Units and Structural Fill. Use of the loose wind blown (dune) sands for foundations is precluded. The Excavation and Backfill specification provides structural backfill requirements based on the geotechnical report and adequate current codes and standards for selection, placing, and compacting structural backfill including testing of candidate fill materials and completed backfills. The Specification for Material Testing Services provides current adequate codes and standards for testing of candidate structural fill materials and in-situ testing of structural fills as they are constructed. The codes and standards are consistent with those called out in the Excavation and Backfill specification.
	Foundation design loads (including full tanks) and estimated settlement are adequately considered.	24590-WTP-DC-ST-01-001, Rev. 1, Structural Design Criteria	The Structural Design Criteria uses current adequate standards to define design loads and load combinations (ASCE 7-98, ACI 349-01, ACI 349R-01). Dead and Fluid loads are included in these loads and load combinations. Settlement design parameters are included in the Structural Design Criteria subsection on geotechnical parameters and foundation design.
	Design calculation approach and design basis of footings with design standard references (e.g., ACI) are adequate.	24590-WTP-DB-ENG-01-001, Rev. 0, Basis of Design; 24590-WTP-DC-ST-01-001, Rev. 1, Structural Design Criteria	The Structural Design Criteria references current adequate design criteria for the design of concrete foundations and footings. ACI 318-99 is referenced for the strength design of commercial grade structures and ACI 349-01 is referenced for "safety" grade structures.

Pretreatment Facility (PTF) Elevation 28'-0" Secondary Containment			COGEMA-IA-016, REV. 1
	Information Assessed	Source of Information	Discussion
Foundation Design	Foundation material is compatible with the soil.	24590-WTP-3PS-DB01-T0001, Rev. 6, Engineering Specification for Furnishing and Delivering Ready-Mix Concrete; 24590-BOF-3PS-C000-T0001, Rev. 2, Engineering Specification for Material Testing Services; 24590-WTP-DB-ENG-01-001, Rev. 0, Basis of Design	The specification for Furnishing and Delivering Ready-Mix Concrete provides adequate current requirements for the selection of coarse and fine aggregates and the procurement of cementitious materials. The Material Testing Services specification lists appropriate tests for evaluating candidate aggregates to assure adequate concrete durability. Requirements for mixing and delivering Ready-Mix Concrete are adequate and current. As noted in the Basis of Design document (section 4.7), the water table lies about 200 feet below the deepest foundations so there is little reason to expect compatibility problems between the concrete foundations and the site soils.
	Foundation will withstand the effects of frost heave.	24590-WTP-DC-ST-01-001, Rev. 1, Structural Design Criteria	The Structural Design Criteria includes adequate provisions to preclude frost heave in the section addressing Lateral Earth Pressure loads. The frost line is identified to be 30 inches below finished grade. All structural foundations are required to extend into the soil more than 30 inches below finish grade to preclude frost heave.

5

Pretreatment Facility (PTF) Elevation 28'-0" Secondary Containment			COGEMA-IA-016, REV. 1
	Information Assessed	Source of Information	Discussion
Seismic Design	Seismic considerations have been adequately addressed.	24590-WTP-PER-CSA-02-001, Rev. 3, Secondary Containment Design; 24590-WTP-DC-ST-01-001, Rev. 1, Structural Design Criteria; ACI 349, Code Requirements for Nuclear Safety-Related Concrete Structures; ASCE 4, Seismic Analysis of Safety Related Nuclear Structures and Commentary; ANSI/AISC N690, Specification for the Design, Fabrication and Erection of Steel Safety-Related Structures for Nuclear Facilities; AISC MO16-89, Manual of Steel Construction - Allowable Stress Design, Ninth Edition.	The Secondary Containment Design document specifies the appropriate design methodologies, materials, loads, and load combinations (including seismic loads) for the PTF secondary containment components. The Structural Design Criteria provides detailed discipline specific codes and standards for the design of Seismic Category I and II (SC-I/II) PTF secondary containment foundations, structures, and liners by the design engineers. ACI-349-01 and ACI 349R-01 provide the design code and load combinations for design of the secondary containment reinforced concrete foundations and structures. Structural steel components of the secondary containment are to be designed using ANSI/ASCE N690 and the AISC Allowable Stress Design code. ASCE 4-98 is used for guidance on seismic analysis of safety-related nuclear structures. Lateral force response spectra for design of SC-I/II secondary containments and liners are provided in the Structural Design Criteria for input to the overall building seismic analysis models. Seismic design considerations have been adequately addressed.

	Information Assessed	Source of Information	Discussion
Compatibility & Strength	The stored waste is compatible with its Secondary Containment and leak detection hardware based on a detailed chemical and physical analysis of the wastes used and other information sources.	24590-WTP-DB-ENG-01-001, Rev. 0, Basis of Design; 24590-WTP-PER-M-02-001, Rev. 2, Material Selections for Building Secondary Containment/Leak Detection; 24590-WTP-PER-CSA-02-001, Rev. 3, Secondary Containment Design; 24590-PTF-M6-PWD-P0043, Rev. 1, P&ID - PTF Plant Wash & Disposal System C3 Area Floor Drains; 24590-PTF-PER-M-03-002, Rev. 0, Sump and Drain Data at 28Ft Level for PT Facility;	The Basis of Design states that cells are appropriately lined and any spills are removed and flushed within 24-hr or as timely as possible. Based on detailed analysis of the corrosive properties of expected waste process operations, the Material Selection report identifies appropriate corrosion resistant materials for Secondary Containment special protective coatings. The Secondary Containment Design report provides adequate typical construction details for installation of special protective coatings. The rooms considered in this assessment are all R2/C3 equipment rooms. These rooms are provided with C3 floor drains as shown on the P&ID for the Plant Wash and Disposal System C3 Area Floor Drains. Floor drains for each of the rooms considered in this assessment are itemized in the Sump and Drain Data at 28 Ft Level for PTF document. Individual floor drains are not equipped with leak detection.
	The design shows that the Secondary Containment has sufficient strength and thickness to prevent failure owing to pressure gradients, static head during a release, physical contact with the waste, climatic conditions, and the stress of daily operations (e.g., vehicular traffic).	24590-WTP-DB-ENG-01-001, Rev. 0, Basis of Design; 24590-WTP-PER-CSA-02-001, Rev. 3, Secondary Containment Design; 24590-PTF-P1-P01T-P0002, Rev. 1, PRETREATMENT FACILITY GENERAL ARRANGEMENT PLAN AT EL. 28'-0" and the associated cross-section drawings listed above.	These general requirements are stated as design goals in the Basis of Design document. The explicit design codes and standards and loads and load combinations for design are listed in the Secondary Containment Design requirements document. These requirements and codes and standards are adequate for the secondary containment design. Since the secondary containment being considered is located in rooms inside the Pretreatment Facility rather than directly buried, pressure gradients and vehicular traffic are not applicable load cases. The drawings show the general arrangement of the secondary containment.

Pretreatment Facility (PTF) Elevation 28'-0" Secondary Containment			COGEMA-IA-016, REV. 1
	Information Assessed	Source of Information	Discussion
Strength	The Secondary Containment system has sufficient strength in the presence of operational stresses from site-specific conditions (i.e., traffic, heavy equipment, precipitation, frost).	24590-WTP-DB-ENG-01-001, Rev. 0, Basis of Design; 24590-WTP-PER-CSA-02-001, Rev. 3, Secondary Containment Design	Because the secondary containment being considered is installed inside the Pretreatment Facility, precipitation, frost and vehicle wheel loads are not applicable load cases. The Secondary Containment Design document identifies the applicable load cases (operational stresses) from site specific conditions that must be considered in the design.
Foundation Integrity	The Secondary Containment is properly supported by a foundation or base in order to prevent failure from settlement, compression, or uplift, including the residual effects of installation.	24590-WTP-DC-ST-01-001, Rev. 1, Structural Design Criteria; 24590-WTP-PER-CSA-02-001, Rev. 3, Secondary Containment Design; 24590-PTF-P1-P01T-P0002, Rev. 1, PRETREATMENT FACILITY GENERAL ARRANGEMENT PLAN AT EL. 28'-0" and the associated cross-section drawings listed above	These conditions are fully addressed in the Structural Design Criteria and the Secondary Containment Design document. The design requirements and codes and standards specified are adequate to satisfy these performance goals. The design and construction specifications adequately provide for proper foundation construction and installation of the Secondary Containment to preclude these failure modes. The general arrangement plan drawing for elevation 28'-0" and the associated cross-sections provide an adequate description of the Secondary Containment being considered.
	The placement, structural support, and type of material used for backfill around and below the Secondary Containment are appropriate.	24590-BOF-3PS-CE01-T0001, Rev. 4, Engineering Specification for Excavation and Backfill; 24590-BOF-3PS-C000-T0001, Rev. 2, Engineering Specification for Material Testing Services	The Excavation and Backfill and Material Testing specifications contain current adequate industry standards for selecting and testing fill materials, placing and compacting backfills, and testing not less than once each lift to assure adequate compaction. Requirements for testing and record keeping are current and adequate for both safety grade fills and commercial grade fills. The Excavation and Backfill specification also provides for the use of Controlled Density Fill.

Pretreatment Facility (PTF) Elevation 28'-0" Secondary Containment			COGEMA-IA-016, REV. 1
	Information Assessed	Source of Information	Discussion
Infiltration	The design or operation (e.g., diking & curbing) prevents run-on or infiltration of precipitation into the Secondary Containment system unless the collection system has sufficient excess capacity (25 yr rainfall) to contain the run-on precipitation.	24590-WTP-DB-ENG-01-001, Rev. 0 Basis of Design; 24590-PTF-PER-M-03-002, Rev. 0, Sump and Drain Data at 28 Ft Level for PT Facility; 24590-PTF-P1-P01T-P0002, Rev. 1, PRETREATMENT FACILITY GENERAL ARRANGEMENT PLAN AT EL. 28'-0" and the associated cross-section drawings listed above	This requirement is specified in the Environmental section of the Basis of Design document. All secondary containments being reviewed are located inside the Pretreatment Facility as shown in the drawings and are protected from precipitation and run-on by the building envelope. The general arrangement plan and drawings show that the regulated R2/C3 equipment alcoves are separated from C2 areas with curbs to contain any leak and spills or fire protection discharges. Each alcove is equipped with a drain(s) to direct these liquids to the C3 floor drain collection vessel (PWD-VSL-00046).
	The design includes an external moisture barrier or other means to prevent moisture from entering the cell.	24590-WTP-DB-ENG-01-001, Rev. 0, Basis of Design; 24590-PTF-P1-P01T-P0002, Rev. 1, PRETREATMENT FACILITY GENERAL ARRANGEMENT PLAN AT EL. 28'-0" and the associated cross-section drawings listed above	The Secondary Containment shown on the general arrangement plan at elevation 28'-0" and the associated cross-sections is located inside the Pretreatment Facility building which shields it from surface water percolation. The ground water table is located about 200 feet below the local grade level as noted in the Basis of Design.

	Information Assessed	Source of Information	Discussion
Liner System	The containment area is free of cracks or gaps and the design discusses methods of their minimization.	24590-WTP-PER-CSA-02-001, Rev. 3, Secondary Containment Design; 24590-PTF-PER-M-03-002, Rev. 0, Sump and Drain Data at 28Ft Level for PT Facility; 24590-PTF-P1-P01T-P0002, Rev. 1, PRETREATMENT FACILITY GENERAL ARRANGEMENT PLAN AT EL. 28'-0" and the associated cross-sections listed above	The Secondary Containment Design document provides current adequate requirements and codes and standards to provide leak tight special protective coatings for secondary containment. The Secondary Containment Design document (CSA-02-001) includes appropriate details for installation of protective coatings free of cracks and gaps. R2/C3 areas that are adjacent to R2/C2 operations areas are separated from the R2/C2 areas with curbs so that potential waste spills are contained in the C3 areas and routed to the floor drains as noted in the Sump and Drain Data document. These areas are shown on the general arrangement plan.
	The design has considered the compatibility of the concrete liner or coatings and waste and presents information on coatings planning to be used from the manufacturer addressing compatibility with the stored waste. The lining or coating must prevent the waste from migrating into the concrete.	24590-WTP-PER-M-02-001, Rev. 2, Material Selections for Building Secondary Containment/Leak Detection; 24590-WTP-PER-CSA-02-001, Rev. 3, Secondary Containment Design; 24590-PTF-P1-P01T-P0002, Rev. 1, PRETREATMENT FACILITY GENERAL ARRANGEMENT PLAN AT EL. 28'-0" and the associated cross-section drawings listed above	The Material Selection Study contains general information on the compatibility of planned special protective coatings with the secondary containment concrete. Adequate typical details are furnished in the Secondary Containment Design document for installation of the special protective coatings. The general arrangement drawing for the Pretreatment Facility and the associated cross-sections show the rooms where secondary containment will be furnished.

10

COGEMA ENGINEERING

RECEIVED
JUN 2 6 2003
BNI-Subcontracts

June 26, 2003

COGEMA-03-0208

T. A. O'Toole
Bechtel National, Inc.
Waste Treatment Plant
2435 Stevens Center
Richland, Washington 99352

Dear Ms. O'Toole:

STRUCTURAL INTEGRITY ASSESSMENT OF THE PRETREATMENT FACILITY (PTF) ELEVATION 28'-0" SECONDARY CONTAINMENT, REVISION 1

The integrity assessment has been completed per the contract requirements and is attached for your use. The assessment found the design intent is sufficient to ensure the foundations and secondary containments will be adequately designed and will have sufficient structural strength, compatibility with the waste(s) to be stored or treated, and corrosion protection to ensure that they will not collapse, rupture, or fail.

If you have any questions, please contact me at (509) 376-5445, or via facsimile at (509) 372-0504.

Sincerely,

K. V. Scott, Manager
Facilities, Structures & Components

kld

Attachment

cc: D. C. Pfluger w/ attachment

29590-CM-HC4-HX4G-00138

11

2425 Stevens Center Place, Second Floor, Richland, Washington 99352 Tel: (509) 372-3572 - Fax: (509) 372-3169
COGEMA Engineering Corporation

MASTER DISTRIBUTION SCHEDULE

Project Name: RPP-WTP

Document Distribution: 24590-CM-HC4-HXYG-00138

Document Number: **Revision:**

Insert rows as necessary ↑

Name	MSIN	Controlled	Uncontrolled	Size				Comments
				8 ½ x 11	11 x 17	Full	As Is	
Dan Pfluger	MS4-E2							LEAD REVIEWER
Brad Erlundson								Reviewer
Trisha O'Toole								Info

Insert rows as necessary ↑

DAN PFLUGER
Approver's Name (Print)

Approver's Signature

8/27/2002
Date

Job No. 24590

Bechtel National, Inc.

SUPPLIER DOCUMENT STATUS

1. [X] **Work may proceed.**
2. [ ] **Revise and resubmit. Work may proceed subject to resolution of indicated comments.**
3. [ ] **Revise and resubmit. Work may not proceed.**
4. [ ] **Review not required. Work may proceed.**

Permission to proceed does not constitute acceptance or approval of design details, calculations, analyses, test methods, or materials developed or selected by the supplier and does not relieve supplier from full compliance with contractual obligations.

REVIEWED										EGNS BMC

G-321 Document Category N/A
[From Supplement A to G-321-E (E) or G-321-V (V), as applicable, or "N/A" if SSRS is used]

Supersedes BNI Document No. N/A Rev. _____
[When applicable]

Accepted by DC Pfluger (Print Name) DC Pfluger (Signature) 12/17/03 (Date)

Released by _____ (Print Name) _____ (Signature) _____ (Date)
[When applicable]

416 GP&S 7-03

24590-CM-HC4-HXYG-00138-01-18
REV. 00A

SUBCONTRACT SUBMITTAL

Best Available Copy

R10163277

COGEMA-IA-029, Rev. 0

IQRPE REVIEW
Of
THE PREATREATMENT FACILITY
ULTRAFILTRATION PROCESS SYSTEM (UFP) VESSELS

"I, Tarlok S. Hundal, have reviewed and certified a portion of the design of a new tank system or component located at the Hanford Waste Treatment Plant, owned/operated by Department of Energy, Office of River Protection, Richland, Washington. My duties were independent review of the current design for the Pretreatment Facility (PTF) Ultrafiltration Process System (UFP) Vessels as required by The Dangerous Waste Regulations, namely, WAC 173-303-640(3) applicable paragraphs [i.e., (a) through (g)]."

"I certify under penalty of law that I have personally examined and am familiar with the information submitted in this document and all attachments and that, based on my inquiry of those individuals immediately responsible for obtaining the information, I believe that the information is true, accurate, and complete. I am aware that there are significant penalties for submitting false information, including the possibility of fine and imprisonment."

The documentation reviewed indicates that the design intent fully satisfies the requirements of the WAC.

The attached review is eight (8) pages numbered one (1) through eight (8) for the Ultrafilters, UFP-FILT-00001,2,3 A/B; seven (7) pages numbered nine (9) through fifteen (15) for the Ultrafiltration Feed Preparation Vessels, UFP-VSL-00001 A/B; seven (7) pages numbered sixteen (16) though twenty two (22) for the Ultrafiltration Feed Vessels, UFP-VSL-00002 A/B; and seven (7) pages numbered twenty three (23) though twenty nine (29) for the Ultrafiltration Permeate Collection Vessels, UFP-VSL-00062 A/B/C.

TARLOK SINGH HUNDAL
STATE OF WASHINGTON
20213
REGISTERED
PROFESSIONAL ENGINEER

EXPIRES: 02/15/04

Signature

12-12-03
Date

24590-CM-HC4-HXYG-00138-01-18 Rev00A

STRUCTURAL INTEGRITY ASSESSMENT OF THE PRETREATMENT FACILITY ULTRAFILTRATION PROCESS SYSTEM (UFP) VESSELS

COGEMA-IA-029
REV. 0

Please note that source, special nuclear and byproduct materials, as defined in the Atomic Energy Act of 1954 (AEA), are regulated at the U.S. Department of Energy (DOE) facilities exclusively by DOE acting pursuant to its AEA authority. DOE asserts, that pursuant to the AEA, it has sole and exclusive responsibility and authority to regulate source, special nuclear, and byproduct materials at DOE-owned nuclear facilities. Information contained herein on radionuclides is provided for process description purposes only.

Scope	Scope of this Integrity Assessment	This integrity assessment includes: The six Ultrafiltration Process System, Ultrafilters: UFP-FILT-00001, 2, 3 A/B which are located in the process cells at Elevation 0'-0" in the Pretreatment Facility.
References	Drawings and Mechanical Data Sheets	Drawings: 24590-PTF-P1-P01T-P0001, Rev. 2, Pretreatment Facility General Arrangement Plan at El. 0'-0"; 24590-PTF-P1-P01T-P0008, Rev. 3, Pretreatment Facility General Arrangement Section B-B; 24590-PTF-P1-P01T-P0009, Rev. 6, Pretreatment Facility General Arrangement Section C-C; 24590-PTF-P1-P01T-P0014, Rev. 5, Pretreatment Facility General Arrangement Sect. L-L and K-K; 24590-PTF-P1-P01T-P0015, Rev. 5, Pretreatment Facility General Arrangement Sect. M-M and N-N; 24590-PTF-M5-V17T-P0010, Rev. 0, Process Flow Diagram Ultrafiltration System UFP; 24590-PTF-MV-UFP-P0003, Rev. 0, Equipment Assembly Ultrafiltration Feed Vessel (UFP-VSL-00002A); 24590-PTF-MV-UFP-P0004, Rev. 0, Equipment Assembly Ultrafiltration Feed Vessel (UFP-VSL-00002B); 24590-PTF-MV-UFP-P0005, Rev. 0, Equipment Assembly Ultrafilter Permeate Vessel (UFP-VSL-00062A); 24590-PTF-MV-UFP-P0006, Rev. 0, Equipment Assembly Ultrafilter Permeate Vessel (UFP-VSL-00062B); 24590-PTF-MV-UFP-P0007, Rev. 0, Equipment Assembly Ultrafilter Permeate Vessel (UFP-VSL-00062C). Mechanical Data Sheets: 24590-PTF-MLD-UFP-P0007, Rev. 1, Ultrafilter (UFP-FILT-00001, 2, 3 A/B)
Summary of Assessment		For each item of "Information Assessed" (i.e., Criteria) on the following pages, the items listed under "Source of Information" were reviewed and found to furnish adequate design controls and requirements to ensure the design intent fully satisfies the requirements of Washington Administrative Code, WAC-173-303-640, *Dangerous Waste Regulations.*

	Information Assessed	Source of Information	Assessment
Design	Vessel design standards are appropriate and adequate for the vessel's intended use.	Drawings listed above under References; Mechanical Data Sheets listed above under References; 24590-PTF-3PS-MLFP-TP001, Rev.1, Engineering Specification for Ultrafilters; 24590-WTP-3PS-MV00-TP001, Rev. 1, Engineering Specification for Pressure Vessel Design and Fabrication; 24590-WTP-3PS-MV00-TP003, Rev. 1, Engineering Specification for Pressure Vessel Fatigue Analysis; 24590-WTP-3PS-MVB2-T0001, Rev. 1, Engineering Specification for Welding of Pressure Vessels, Heat Exchangers and Boilers; 24590-WTP-3PS-G000-TP002, Rev. 2, Positive Material Identification (PMI); 24590-WTP-3PS-G000-T0001, Rev. 0, General Specification for Supplier Quality Assurance Program Requirements; 24590-WTP-3PS-M000-T0002, Rev. 1, General Specification for Mechanical Handling Equipment Design and Manufacture; 24590-PTF-3YD-UFP-00001, Rev. 0, System Description for Ultrafiltration Process System (UFP); SDCN No. 24590-PTF-3YN-UFP-00001, System Description for Ultrafiltration Process System (UFP);	The UFP system Ultrafilters (UFP-FILT-00001, 2, 3 A/B) are classified as vessels. The Ultafilters and all appurtenances are to be designed to the ASME Section VIII, Division 1 rules which are appropriate for pressure vessels operating with mixed waste solutions over the pressure and temperature ranges specified for these vessels. Supplementary requirements are specified in the Engineering Specification for Pressure Vessel Design and Fabrication and in Engineering Specification for Ultrafilters. Supplementary requirements address pressure vessel fatigue analysis, positive material identification, lifting attachment design, equipment drop evaluation, fabrication tolerances, acceptable welding procedures for the vessel and appurtenances, welder qualifications and testing records, NDE inspections and records, and lifting, packaging, shipping, handling and storage requirements. The Ultrafilter internals are subject to cyclic loading of filling and back flushing operations considered to be fatigue loading. Heat exchanger industry standards properly address fatigue and corrosion fatigue. These are adequate and acceptable design standards for the intended use of the vessels. The UFP Ultrafilters (UFP-FILT-00001, 2, 3, A/B) assemblies are horizontal vessels with a 16.75 in. OD and a horizontal length of 150 in. including the 10 in. Grayloc connectors at both ends and are supported on two saddles. Each Ultrafilter assembly has a welded tube bundle (241 filter tube/elements) made up of 96 in. long x 0.50 in. ID/ 0.625 in. OD porous tubes. The material for Ultrafilter and filter tube assembly is SA-240 316L stainless steel (0.030% maximum carbon content, dual certified) hereafter referred to as 316L. A corrosion allowance of 0.04 in. is specified.

	Information Assessed	Source of Information	Assessment
Design	If a non-standard vessel is to be used, the design calculations demonstrate sound engineering principles of construction.	Drawings listed above under References; Mechanical Data Sheets listed above under References; 24590-PTF-3PS-MLFP-TP001, Rev.1, Engineering Specification for Ultrafilters; 24590-WTP-3PS-MV00-TP001, Rev. 1, Engineering Specification for Pressure Vessel Design and Fabrication; 24590-WTP-3PS-MV00-TP003, Rev. 1, Engineering Specification for Pressure Vessel Fatigue Analysis; PDC No. 24590-WTP-PEN-03-002, PEN Title: Changes to the Permit Specification 24590-WTP-3PS-MV00-TP003, Rev. 1, Engineering Specification for Pressure Vessel Fatigue Analysis; PDC No. 24590-WTP-PEN-03-001, PEN Title: Changes to the Permit Specification 24590-WTP-3PS-MV00-TP002, Rev. 1, Engineering Specification for Seismic Qualification Criteria for Pressure Vessels; 24590-WTP-3PS-MV00-TP002, Rev. 1, Engineering Specification for Seismic Qualification Criteria for Pressure Vessels; 24590-WTP-3PS-SS90-T0001, Rev. 0, Engineering Specification for Seismic Qualification of Seismic Category I/II Equipment and Tanks; AISC 4-98, Seismic Analysis of Safety Related Nuclear Structures and Commentary.	The UFP Ultrafilters (UFP-FILT-00001, 2, 3 A/B) are standard ASME Section VIII vessels. The Mechanical Data Sheets require that the ASME Section VIII, Division 1 vessels be delivered after design, fabrication, inspection and testing with an ASME code stamp and that the vessels be nationally registered. The Mechanical Data Sheets state that the Ultrafilters are Seismic Category III and Quality Level 1, but the Engineering Specification for Ultrafilters states that for conservatism the Ultrafilters shall be designed and fabricated to satisfy the Seismic Category I and Quality Level 1 requirements. Supplemental design information is provided by the reference documents listed in the Source of Information column for utilizing sound engineering principles of construction for the vessels.

	Information Assessed	Source of Information	Assessment
Design	Vessel has adequate strength, after consideration of the corrosion allowance, to withstand the operating pressure, operating temperature, and seismic loads.	Drawings listed above under References; Mechanical Data Sheets listed above under References; 24590-PTF-3PS-MLFP-TP001, Rev. 1, Engineering Specification for Ultrafilters; 24590-WTP-3PS-MV00-TP001, Rev. 1, Engineering Specification for Pressure Vessel Design and Fabrication; 24590-WTP-3PS-MV00-TP002, Rev. 1, Engineering Specification for Seismic Qualification Criteria for Pressure Vessels; 24590-WTP-3PS-SS90-T0001, Rev. 0, Engineering Specification for Seismic Qualification of Seismic Category I/II Equipment and Tanks; AISC 4-98, Seismic Analysis of Safety Related Nuclear Structures and Commentary.	The Mechanical Data Sheets identify each Ultrafilter's operating pressure and temperature ranges, the materials selected for each vessel, the corrosion allowance(s), and the vessel quality levels which determine the requirements for seismic design. The design specifications for the Ultrafilters require specific consideration of the operating pressures and temperatures and seismic loads in the design process. ASME Section VIII, Div. 1 requires that corrosion allowance thickness shall be excluded from nominal vessel thickness when evaluating the adequacy of vessel components for these loads at end of life. The Engineering Specification for Seismic Qualification Criteria for Pressure Vessels adopts ASME Section VIII, Div. 2 design rules to address seismic design and analysis of the vessel and ASME Section VIII, Div. 1 for the vessel supports. Detailed requirements for seismic design of SC-I/II vessels are furnished in the specification for Seismic Qualification of Seismic Category I/II Equipment and Tanks. These codes and standards are adequate and appropriate for design of the UFP Ultrafilter to withstand operating pressure, temperature, and seismic loads for the specified design life.

	Information Assessed	Source of Information	Assessment
Foundation	Vessel foundation will maintain the load of a full vessel.	Drawings listed above under References; 24590-WTP-DB-ENG-01-001, Rev. 1, Basis of Design; 24590-WTP-3PS-MV00-TP001, Rev. 1, Engineering Specification for Pressure Vessel Design and Fabrication.	The Engineering Specification for Pressure Vessel Design and Fabrication requires the use of ASME B&PV Code, Section VIII, Division 1, for design of the vessel supports. This code ensures an adequate design for the vessel supports. Chapter 14 of the Basis of Design document requires that the vessel foundation design must be adequate to support the loads from full vessels.
	If in an area subject to flooding, the vessel is anchored.	24590-WTP-3PS-MV00-TP001, Rev. 1, Engineering Specification for Pressure Vessel Design and Fabrication.	Buoyant forces of an empty vessel in a flooded room are a mandatory standard design load case in this specification for Pressure Vessel Design and Fabrication.
	Vessel system will withstand the effects of frost heave.	24590-WTP-DB-ENG-01-001, Rev. 1, Basis of Design.	The Basis of Design document requires that all structural foundations extend a distance below grade that exceeds the depth of the frost line. The vessels are inside the building at floor Elevation 0'-0" and therefore, are not subject to frost heave.

	Information Assessed	Source of Information	Assessment
Waste Characteristics	Characteristics of the waste to be stored or treated have been identified (ignitable, reactive, toxic, specific gravity, vapor pressure, flash point, storage temperature)	Mechanical Data Sheets listed above under References; Plant Item Material Selection Data Sheet, 24590-PTF-N1D-UFP-P0004, Rev. 1, UFP-FILT-00001, 2, 3 A/B (PTF) Ultrafilter; 24590-WTP-PSAR-ESH-01-002-02, Rev. 1, Preliminary Safety Analysis Report: PT Facility Specific Information; WA7890008967, *Dangerous Waste Portion of the Hanford Facility Resource Conservation and Recovery Act Permit for the Treatment, Storage, and Disposal of Dangerous Waste*, Chapter 10, and Attachment 51, "Hanford Tank Waste Treatment and Immobilization Plant."	The Mechanical Data Sheets present the waste specific gravity, storage temperatures and pressures. The Plant Item Material Selection Data Sheet addresses the pH range and chemical composition of the waste and selects appropriate vessel materials and the corrosion allowance. Other waste characteristics that are hazardous, such as ignitability, reactivity, and toxicity are addressed by the Preliminary Safety Analysis Report for the PTF and in Part A of the Permit as an integral part of the design process. The UFP Ultrafilters provide primary confinement of the waste during normal operations, abnormal operations and during and after a Design Basis Earthquake. The vessels are grounded to control ignition sources.
	Vessel is designed to store or treat the wastes with the characteristics defined above and any treatment reagents.	Plant Item Material Selection Data Sheet, 24590-PTF-N1D-UFP-P0004, Rev. 1, UFP-FILT-00001, 2, 3 A/B (PTF) Ultrafilters; 24590-PTF-3YD-UFP-00001, Rev. 0, System Description for Ultrafiltration Process System (UFP).	The Plant Item Material Selection Data Sheet demonstrates that the vessel is designed to process the wastes discussed above. The System Description discusses normal and abnormal operations for the UFP Ultrafilters (UFP-FILT-00001, 2, 3 A/B). Acid or water for flushing will be added to these filters.
	The waste types are compatible with each other.	24590-PTF-3YD-UFP-00001, Rev. 0, System Description for Ultrafiltration Process System (UFP).	The System Description for the Ultrafiltration Process System (UFP) does not describe any operations where incompatible wastes are mixed in these ultrafilters for processing. The UFP vessels function primarily to separate, wash, or treat feed suspension waste from Ultrafiltration Feed Prep Vessels and transfer it to the Permeate Collection Vessels in the Pretreatment facility for further processing by other PTF systems.

	Information Assessed	Source of Information	Assessment
Corrosion Protection	Vessel material and protective coatings ensure the vessel structure is adequately protected form the corrosive effects of the waste stream and external environments (expected to not leak or fail for the design life of the system)	Drawings listed under References above; Mechanical Data Sheets listed under References above; Plant Item Material Selection Data Sheet; 24590-PTF-N1D-UFP-P0004, Rev. 1, UFP-FILT-00001, 2, 3 A/B (PTF) Ultrafilter; 24590-PTF-3PS-MLFP-TP001, Rev. 1, Engineering Specification for Ultrafilters; 24590-PTF-3YD-UFP-00001, Rev. 0, System Description for Ultrafiltration Process System (UFP).	The Plant Item Material Selection Data Sheet and Specifications show that the Ultrafilters (UFP-FILT-00001, 2, 3 A/B) normally operate between pH 13.8 to 14, at temperature of about 77 °F, and pressure of 100 psig. The assembly is designed for 200 psig pressure at 200 °F temperature. Potential acid cleaning operations of the vessels were also considered. The material selected is 316L and a corrosion allowance of 0.04 in. These UFP vessels are located in cells at Elevation 0'-0" in the PTF. These cells are equipped with liners, sumps and wash down nozzles to mitigate potential leaks. The UFP Ultrafilter vessels are designed to receive waste from and backwash it to Ultrafiltration Feed Vessels (UFP-VSL-0002 A/B) for filtration then send it to Ultrafilter Permeate Collection Vessels (UFP-VSL-00062 A/B/C). Therefore, the cells should remain dry during normal operations which will limit external corrosion of the vessels over the facility design life.
Corrosion Allowance	Corrosion allowance is adequate for the intended service life of the vessel.	Mechanical Data Sheets listed above under References; Plant Item Material Selection Data Sheet; 24590-PTF-N1D-UFP-P0004, Rev. 1, UFP-FILT-00001, 2, 3 A/B (PTF) Ultrafilter	The bases for the UFP vessels material selection and corrosion allowance are furnished in the Plant Item Material Selection Data Sheet. Selection of 316L material with a corrosion allowance of 0.04 in. for a service life of 40 years is adequate and appropriate. The material selections and corrosion allowances are carried forward to the Mechanical Data Sheets consistently and correctly.

	Information Assessed	Source of Information	Assessment
Pressure Relief	Pressure controls (vents and relief valves) are adequately designed to ensure pressure relief if normal operating pressures in the vessel are exceeded.	Drawings listed above under References; 24590-PTF-3PS-MLFP-TP001, Rev. 1, Engineering Specification for Ultrafilters;	The UFP Ultrafilters are in-line equipment designed to receive waste from Ultrafiltration Feed Vessels (UFP-VSL-0002 A/B) for the filtration process and then pass it to Ultrafilter Permeate Collection Vessels (UFP-VSL-00062 A/B/C) or back to Feed Vessels. They will be subjected to a maximum pressure of 180 psig during back-pulsing and are designed to withstand an air pressure of 200 psig which provides adequate safety margin. These Ultrafilters are not holding vessels, thus they don't require any overflow or relief valve mechanism; the waste is just passing thru the porous tubes to the designated tanks which have unrestricted overflow lines to prevent over pressurization as shown on the drawings.

Scope	Scope of this Integrity Assessment	This integrity assessment includes: The two Ultrafiltration Process System, Ultrafiltration Feed Preparation Vessels: UFP-VSL-00001A/B including their appurtenances or offspring items, which are located in process cells at Elevation 0'-0" in the Pretreatment Facility.
References	Drawings and Mechanical Data Sheets	Drawings: 24590-PTF-MV-UFP-P0001, Rev. 0, Equipment Assembly Ultrafiltration Feed Preparation Vessel (UFP-VSL-00001A); 24590-PTF-MV-UFP-P0002, Rev. 0, Equipment Assembly Ultrafiltration Feed Preparation Vessel (UFP-VSL-00001B); 24590-PTF-M6-UFP-P0001, Rev. 0, P & ID-PTF Ultrafiltration Feed Preparation System Vessels (UFP-VSL-00001A/B); 24590-PTF-P1-P01T-P0001, Rev. 2, Pretreatment Facility General Arrangement Plan at El. 0'-0"; 24590-PTF-P1-P01T-P0008, Rev. 3, Pretreatment Facility General Arrangement Section B-B; 24590-PTF-P1-P01T-P0009, Rev. 6, Pretreatment Facility General Arrangement Section C-C; 24590-PTF-P1-P01T-P0014, Rev. 5, Pretreatment Facility General Arrangement Sect. L-L and K-K; 24590-PTF-P1-P01T-P0015, Rev. 5, Pretreatment Facility General Arrangement Sect. M-M and N-N; 24590-PTF-M5-V17T-P0009, Rev. 0, Process Flow Diagram Ultrafiltration Feed Preparation System UFP. Mechanical Data Sheets: 24590-PTF-MVD-UFP-P0001, Rev.0, Ultrafiltration Feed Preparation Vessel (UFP-VSL-00001A); 24590-PTF-MVD-UFP-P0002, Rev.0, Ultrafiltration Feed Preparation Vessel (UFP-VSL-00001B).
Summary of Assessment		For each item of "Information Assessed" (i.e., Criteria) on the following pages, the items listed under "Source of Information" were reviewed and found to furnish adequate design controls and requirements to ensure the design intent fully satisfies the requirements of Washington Administrative Code, WAC-173-303-640, *Dangerous Waste Regulations*.

	Information Assessed	Source of Information	Assessment
Design	Vessel design standards are appropriate and adequate for the vessel's intended use.	Drawings listed above under References; Mechanical Data Sheets listed above under References; 24590-WTP-3PS-MV00-TP001, Rev. 1, Engineering Specification for Pressure Vessel Design and Fabrication; 24590-WTP-3PS-MV00-TP003, Rev. 1, Engineering Specification for Pressure Vessel Fatigue Analysis; SCN No. 24590-WTP-3PN-MV00-00004, Pressure Vessel Fatigue Analysis; 24590-WTP-3PS-MVB2-T0001, Rev. 1, Engineering Specification for Welding of Pressure Vessels, Heat Exchangers and Boilers; 24590-WTP-3PS-G000-TP002, Rev. 2, Positive Material Identification (PMI); 24590-WTP-3PS-G000-T0001, Rev. 0, General Specification for Supplier Quality Assurance Program Requirements; 24590-WTP-3PS-M000-T0002, Rev. 1, General Specification for Mechanical Handling Equipment Design and Manufacture; 24590-PTF-3YD-UFP-00001, Rev. 0, System Description for Ultrafiltration Process System (UFP). SDCN No. 24590-PTF-3YN-UFP-00001, System Description for Ultrafiltration Process System (UFP);	The UFP system Ultrafiltration Feed Preparation Vessels, UFP-VSL-00001A/B vessels and all appurtenances are to be designed to the ASME Section VIII, Division 1 rules which are appropriate for pressure vessels operating with mixed waste solutions over the pressure and temperature ranges specified for these vessels. Supplementary requirements are specified in the Engineering Specification for Pressure Vessel Design and Fabrication. Supplementary requirements address pressure vessel fatigue analysis, positive material identification, lifting attachment design, equipment drop evaluation, fabrication tolerances, acceptable welding procedures for the vessel and appurtenances, welder qualifications and testing records, NDE inspections and records, and lifting, packaging, shipping, handling and storage requirements. Some of the vessel internal equipment is subject to cyclic loading. The fatigue design standards, ASME Section VIII, Division 2, are appropriate for components with a high number of load cycles. These are adequate and acceptable design standards for the intended use of the vessels. The Ultrafiltration Feed Preparation Vessels, UFP-VSL-00001A/B assemblies are vertical vessels with a 20 ft ID and a vertical length of 25'-6" tangent to tangent, and each vessel supported on a cylindrical skirt (3/4" thick by approx. 7'-0" high) which in turn is supported on a base plate beam. Top and bottom heads are ellipsoidal with minimum thickness of 3/4" (top) and 1.07" (bottom). The shells are specified to be 1" thick (upper shell) and 1.375" (lower shell). There are eight Pulse Jet Mixer (PJM) vessels (size 36" ID x 169" High) supported from the top heads of the Feed Preparation Vessels. Material for the shells, heads and vessel's internal equipment including Pulse Jet Mixers is SA-240 316L stainless steel (0.030% maximum carbon content, dual certified). The support skirts are to be SA-240 304L stainless steel (0.030% maximum carbon content, dual certified). Both above listed stainless steel materials will hereafter be referred to as 316L and 304L, respectively. The base plate beams are A 572 Gr. 50 steel. Portions of the steam ejectors located inside the vessels are Alloy 22 (UNS # N06022). The operating volume is to be about 64,600 gallons and the total internal volume is to be about 75,600 gallons.

	Information Assessed	Source of Information	Assessment
Design	If a non-standard vessel is to be used, the design calculations demonstrate sound engineering principles of construction.	Drawings listed above under References; Mechanical Data Sheets listed above under References; 24590-WTP-3PS-MV00-TP001, Rev. 1, Engineering Specification for Pressure Vessel Design and Fabrication; 24590-WTP-3PS-MV00-TP003, Rev. 1, Engineering Specification for Pressure Vessel Fatigue Analysis; PDC No. 24590-WTP-PEN-03-002, PEN Title: Changes to the Permit Specification 24590-WTP-3PS-MV00-TP003, Rev. 1, Engineering Specification for Pressure Vessel Fatigue Analysis; PDC No. 24590-WTP-PEN-03-001, PEN Title: Changes to the Permit Specification 24590-WTP-3PS-MV00-TP002, Rev. 1, Engineering Specification for Seismic Qualification Criteria for Pressure Vessels; 24590-WTP-3PS-MV00-TP002, Rev. 1, Engineering Specification for Seismic Qualification Criteria for Pressure Vessels; 24590-WTP-3PS-SS90-T0001, Rev. 0, Engineering Specification for Seismic Qualification of Seismic Category I/II Equipment and Tanks; AISC 4-98, Seismic Analysis of Safety Related Nuclear Structures and Commentary.	The UFP Ultrafiltration Feed Preparation Vessels, UFP-VSL-00001A/B vessels are standard ASME Section VIII vessels. The Mechanical Data Sheets require that the ASME Section VIII, Division 1 vessels be delivered after design, fabrication, inspection and testing with an ASME code stamp and that the vessels be nationally registered. Supplemental design information is provided by the reference documents listed in the Source of Information column for utilizing sound engineering principles of construction for the vessels.

	Information Assessed	Source of Information	Assessment
Design	Vessel has adequate strength, after consideration of the corrosion allowance, to withstand the operating pressure, operating temperature, and seismic loads.	Drawings listed above under References; Mechanical Data Sheets listed above under References; 24590-WTP-3PS-MV-TP001, Rev.1, Engineering Specification for Pressure Vessel Design and Fabrication; 24590-WTP-3PS-MV00-TP002, Rev. 1, Engineering Specification for Seismic Qualification Criteria for Pressure Vessels; 24590-WTP-3PS-SS90-T0001, Rev. 0, Engineering Specification for Seismic Qualification of Seismic Category I/II Equipment and Tanks; AISC 4-98, Seismic Analysis of Safety Related Nuclear Structures and Commentary; 24590-PTF-3YD-UFP-00001, Rev. 0, System Description for Ultrafiltration Process System (UFP).	The Mechanical Data Sheets identify each vessel's operating pressure and temperature ranges, the materials selected for each vessel, the corrosion allowance(s), and the vessel quality levels which determine the requirements for seismic design. The design specifications for the vessels require specific consideration of the operating pressures and temperatures and seismic loads in the design process. ASME Section VIII, Div. 1 requires that corrosion allowance thickness shall be excluded from nominal vessel thickness when evaluating the adequacy of vessel components for these loads at end of life. The Engineering Specification for Seismic Qualification Criteria for Pressure Vessels adopts ASME Section VIII, Div. 2 design rules to address seismic design and analysis of the vessel and ASME Section VIII, Div. 1 for the vessel supports. Detailed requirements for seismic design of SC-I/II vessels are furnished in the specification for Seismic Qualification of Seismic Category I/II Equipment and Tanks. These codes and standards are adequate and appropriate for design of the UFP vessels to withstand operating pressure and temperature loads and seismic loads for the specified design life.

	Information Assessed	Source of Information	Assessment
Foundation	Vessel foundation will maintain the load of a full vessel.	Drawings listed above under references; 24590-WTP-DB-ENG-01-001, Rev. 1, Basis of Design; 24590-WTP-3PS-MV00-TP001, Rev. 1, Engineering Specification for Pressure Vessel Design and Fabrication.	The Engineering Specification for Pressure Vessel Design and Fabrication requires the use of ASME B&PV code, Section VIII, Division I for design of the vessel supports. This code ensures an adequate design for the vessel supports. Chapter 14 of the Basis of Design document requires that the vessel foundation design must be adequate to support the loads from full vessels.
	If in an area subject to flooding, the vessel is anchored.	24590-WTP-3PS-MV00-TP001, Rev. 1, Engineering Specification for Pressure Vessel Design and Fabrication.	Buoyant forces of an empty vessel in a flooded room are a mandatory standard design load case in this specification for Pressure Vessel Design and Fabrication.
	Vessel system will withstand the effects of frost heave.	24590-WTP-DB-ENG-01-001, Rev. 1, Basis of Design.	The Basis of Design document requires that all structural foundations extend a distance below grade that exceeds the depth of the frost line. The vessels are inside the building at floor Elevation 0'-0" and therefore, are not subject to frost heave.

	Information Assessed	Source of Information	Assessment
Waste Characteristics	Characteristics of the waste to be stored or treated have been identified (ignitable, reactive, toxic, specific gravity, vapor pressure, flash point, storage temperature)	Mechanical Data Sheets listed above under References; Vessel/Tank Material Selection Data Sheet, 24590-PTF-N1D-UFP-P0005, Rev. 0, UFP-VSL-00001A/B (PTF) Ultrafiltration Feed Preparation Vessels; 24590-WTP-PSAR-ESH-01-002-02, Rev. 1, Preliminary Safety Analysis Report: PT Facility Specific Information; WA7890008967, *Dangerous Waste Portion of the Hanford Facility Resource Conservation and Recovery Act Permit for the Treatment, Storage, and Disposal of Dangerous Waste*, Chapter 10, and Attachment 51, "Hanford Tank Waste Treatment and Immobilization Plant."	The Mechanical Data Sheets present the waste specific gravity, storage temperatures and pressures. The Vessel/Tank Material Selection Data Sheet addresses the pH range and chemical composition of the waste to select appropriate vessel materials and specify the corrosion allowance. Other waste characteristics that are hazardous, such as ignitability, reactivity, and toxicity are addressed by the Preliminary Safety Analysis Report for the PTF and in Part A of the Permit as an integral part of the design process. The UFP vessels provide primary confinement of the waste during normal operations, abnormal operations and during and after a Design Basis Earthquake. The vessels must retain integrity to insure that the hydrogen controls for the vessel head space continue functioning. The internal Pulse Jet Mixers must remain functional to prevent hydrogen buildup in the vessel sludge. The hydrogen dilution air supply and the PTF Process Vessel Vent System must retain integrity and remain functional to provide continuing hydrogen control. The vessels are grounded to control ignition sources.
	Vessel is designed to store or treat the wastes with the characteristics defined above and any treatment reagents.	Vessel/Tank Material Selection Data Sheet, 24590-PTF-N1D-UFP-P0005, Rev. 0, Ultrafiltration Feed Preparation Vessels, UFP-VSL-00001A/B; 24590-PTF-3YD-UFP-00001, Rev. 0, System Description for Ultrafiltration Process System (UFP).	The Vessel/Tank Material Selection Data Sheet demonstrates that the vessel is designed to process the wastes discussed above. The System Description discusses normal and abnormal operations for the UFP vessels. Compatible chemicals may be added to the vessels to maintain sodium molarity of 5M. Acid or water will be used for flushing/rinsing.
	The waste types are compatible with each other.	24590-PTF-3YD-UFP-00001, Rev. 0, System Description for Ultrafiltration Process System (UFP).	The System Description for the Ultrafiltration Process System (UFP) does not describe any operations where incompatible wastes are mixed in these vessels for processing. The UFP vessels function primarily to prepare the waste for processing by other components of the UFP in the Pretreatment facility.

	Information Assessed	Source of Information	Assessment
Corrosion Protection	Vessel material and protective coatings ensure the vessel structure is adequately protected form the corrosive effects of the waste stream and external environments (expected to not leak or fail for the design life of the system)	Drawings listed above under References; Mechanical Data Sheets listed above under References; Vessel/Tank Material Selection Data Sheet; 24590-PTF-N1D-UFP-P0005, Rev. 0, Ultrafiltration Feed Preparation Vessels, UFP-VSL-00001A/B; 24590-PTF-3YD-UFP-00001, Rev. 0, System Description for Ultrafiltration Process System (UFP).	The Vessel/Tank Material Selection Data Sheet shows that the Ultrafiltration Feed Preparation Vessels, UFP-VSL-00001A/B normally operate at atmospheric pressure, pH 13, and a temperature of about 77 °F. The assembly is designed for 15 psig pressure and 150 °F temperature. Potential acid cleaning operations of the vessels were also considered. The material selected is 316L and a corrosion allowance of 0.04 in. The PJMs are designed for 80 psig and150 °F temperature. The UFP vessels have cooling jackets around them to maintain the desired temperature of the waste. The UFP vessels are located in cells at Elevation 0'-0" in the PTF. These cells are equipped with liners, sumps and wash down nozzles to mitigate potential leaks. Therefore, the cells should remain dry during normal operations which will limit external corrosion of the vessels over the facility design life. The UFP vessels receive waste from LAW feed from FRP system (FRP-VSL-00002A/B/C/D), HLW feed system from HLP system (HLP-VSL-00022), evaporator concentrate from the FEP system (FEP-SEP-00001A/B), process condensate from RLD system (RLD-TK-0006A/B), and prepares and sends it to Ultrafiltration Feed Vessels (UFP-VSL-00002A/B) for further processing.
Corrosion Allowance	Corrosion allowance is adequate for the intended service life of the vessel.	Mechanical Data Sheets listed above under References; Vessel/Tank Material Selection Data Sheet; 24590-PTF-N1D-UFP-P0005, Rev. 0, Ultrafiltration Feed Preparation Vessels, UFP-VSL-00001A/B.	The bases for the UFP vessels material selection and corrosion allowance are furnished in the Vessel/Tank Material Selection Data Sheet. Selection of 316L material with a corrosion allowance of 0.04 in. for a service life of 40 years is adequate and appropriate. The material selections and corrosion allowances are carried forward to the Mechanical Data Sheets consistently and correctly.
Pressure Relief	Pressure controls (vents and relief valves) are adequately designed to ensure pressure relief if normal operating pressures in the vessel are exceeded.	Drawings listed above under References; 24590-PTF-3YD-UFP-00001, Rev. 0, System Description for Ultrafiltration Process System (UFP).	The UFP Ultrafiltration Feed Preparation Vessels, UFP-VSL-00001A/B vessels are designed to overflow through 8" diameter lines to the Plant Overflow Vessel (PWD-VSL-00033) located at Elevation (-) 45'-0", as shown on the drawings. These unrestricted overflow lines are tied to the vessel vent system to prevent over pressurization of the vessels.

Scope	Scope of this Integrity Assessment	This integrity assessment includes: The two Ultrafiltration Process System, Ultrafiltration Feed Vessels: UFP-VSL-00002A/B including their appurtenances or offspring items, which are located in process cells at Elevation 0'-0" in the Pretreatment Facility.
References	Drawings and Mechanical Data Sheets	Drawings: 24590-PTF-MV-UFP-P0003, Rev. 0, Equipment Assembly Ultrafiltration Feed Vessel (UFP-VSL-00002A); 24590-PTF-MV-UFP-P0004, Rev. 0, Equipment Assembly Ultrafiltration Feed Vessel (UFP-VSL-00002B); 24590-PTF-M6-UFP-P0002, Rev. 0, P & ID-PTF Ultrafiltration System Vessels (UFP-VSL-00002A); 24590-PTF-M6-UFP-P0003, Rev. 0, P & ID-PTF Ultrafiltration System Vessels (UFP-VSL-00002B); 24590-PTF-P1-P01T-P0001, Rev. 2, Pretreatment Facility General Arrangement Plan at El. 0'-0"; 24590-PTF-P1-P01T-P0008, Rev. 3, Pretreatment Facility General Arrangement Section B-B; 24590-PTF-P1-P01T-P0009, Rev. 6, Pretreatment Facility General Arrangement Section C-C; 24590-PTF-P1-P01T-P0014, Rev. 5, Pretreatment Facility General Arrangement Sect. L-L and K-K; 24590-PTF-P1-P01T-P0015, Rev. 5, Pretreatment Facility General Arrangement Sect. M-M and N-N; 24590-PTF-M5-V17T-P0010, Rev. 0, Process Flow Diagram Ultrafiltration System UFP. Mechanical Data Sheets: 24590-PTF-MVD-UFP-P0014, Rev.0, Ultrafiltration Feed Vessel (UFP-VSL-00002A); 24590-PTF-MVD-UFP-P0015, Rev.0, Ultrafiltration Feed Vessel (UFP-VSL-00002B).
Summary of Assessment		For each item of "Information Assessed" (i.e., Criteria) on the following pages, the items listed under "Source of Information" were reviewed and found to furnish adequate design controls and requirements to ensure the design intent fully satisfies the requirements of Washington Administrative Code, WAC-173-303-640, *Dangerous Waste Regulations.*

Design	Vessel design standards are appropriate and adequate for the vessel's intended use.	Drawings listed above under References; Mechanical Data Sheets listed above under References; 24590-WTP-3PS-MV00-TP001, Rev. 1, Engineering Specification for Pressure Vessel Design and Fabrication; 24590-WTP-3PS-MV00-TP003, Rev. 1, Engineering Specification for Pressure Vessel Fatigue Analysis; 24590-WTP-3PS-MVB2-T0001, Rev. 1, Engineering Specification for Welding of Pressure Vessels, Heat Exchangers and Boilers; 24590-WTP-3PS-G000-TP002, Rev. 1, Positive Material Identification (PMI); 24590-WTP-3PS-G000-T0001, Rev. 0, General Specification for Supplier Quality Assurance Program Requirements; 24590-WTP-3PS-M000-T0002, Rev. 1, General Specification for Mechanical Handling Equipment Design and Manufacture; 24590-PTF-3YD-UFP-00001, Rev. 0, System Description for Ultrafiltration Process System (UFP). SDCN No. 24590-PTF-3YN-UFP-00001, System Description for Ultrafiltration Process System (UFP);	The UFP system Ultrafiltration Feed Vessels, UFP-VSL-00002A/B vessels and all appurtenances are to be designed to the ASME Section VIII, Division 1 rules which are appropriate for pressure vessels operating with mixed waste solutions over the pressure and temperature ranges specified for these vessels. Supplementary requirements are specified in the Engineering Specification for Pressure Vessel Design and Fabrication. Supplementary requirements address pressure vessel fatigue analysis, positive material identification, lifting attachment design, equipment drop evaluation, fabrication tolerances, acceptable welding procedures for the vessel and appurtenances, welder qualifications and testing records, NDE inspections and records, and lifting, packaging, shipping, handling and storage requirements. Some of the vessel internal equipment is subject to cyclic loading. The fatigue design standards, ASME Section VIII, Division 2, are appropriate for components with a high number of load cycles. These are adequate and acceptable design standards for the intended use of the vessels. The UFP Ultrafiltration Feed Vessels, UFP-VSL-00002A/B assemblies are vertical vessels with a 14 ft ID and a vertical length of 30'-9" tangent to tangent, and each vessel is supported on a cylindrical skirt (1" thick by approx. 5'-0" high) which in turn is supported on a base ring beam. Top and bottom heads are semi-elliptical with minimum thickness of 5/8"(top) and 7/8" (bottom). The shells are specified to be 7/8" thick (upper shell) and 1.25" thick (lower shell). There are six Pulse Jet Mixer (PJM) vessels (size 32" ID x 184" high) supported from the top heads of the Feed Vessels. A major portion of the shell and bottom head has a 1/2" thick cooling water jacket. Materials for the shells, heads and vessels' internal equipment including the PJMs, cooling water jackets, and support skirts are SA-240 304L stainless steel (0.030% maximum carbon content, dual certified) hereafter referred to as 304L. The support base ring beams are A 572 Gr. 50 steel. Portions of the steam ejectors located inside the vessels are Alloy 22 (UNS # N06022). The operating volume is to be about 36,500 gallons and the total internal volume is to be about 40,800 gallons.

Design	If a non-standard vessel is to be used, the design calculations demonstrate sound engineering principles of construction.	Drawings listed above under References; Mechanical Data Sheets listed above under References; 24590-WTP-3PS-MV00-TP001, Rev. 1, Engineering Specification for Pressure Vessel Design and Fabrication; 24590-WTP-3PS-MV00-TP003, Rev. 1, Engineering Specification for Pressure Vessel Fatigue Analysis; SCN No. 24590-WTP-3PN-MV00-00004, Pressure Vessel Fatigue Analysis; PDC No. 24590-WTP-PEN-03-002, PEN Title: Changes to the Permit Specification 24590-WTP-3PS-MV00-TP003, Rev. 1, Engineering Specification for Pressure Vessel Fatigue Analysis; PDC No. 24590-WTP-PEN-03-001, PEN Title: Changes to the Permit Specification 24590-WTP-3PS-MV00-TP002, Rev. 1, Engineering Specification for Seismic Qualification Criteria for Pressure Vessels; 24590-WTP-3PS-MV00-TP002, Rev. 1, Engineering Specification for Seismic Qualification Criteria for Pressure Vessels; 24590-WTP-3PS-SS90-T0001, Rev. 0, Engineering Specification for Seismic Qualification of Seismic Category I/II Equipment and Tanks; AISC 4-98, Seismic Analysis of Safety Related Nuclear Structures and Commentary.	The UFP Ultrafiltration Feed Vessels, UFP-VSL-00002A/B vessels are standard ASME Section VIII vessels. The Mechanical Data Sheets require that the ASME Section VIII, Division 1 vessels be delivered after design, fabrication, inspection and testing with an ASME code stamp and that the vessels be nationally registered. Supplemental design information is provided by the reference documents listed in the Source of Information column for utilizing sound engineering principles of construction for the vessels.

Design	Vessel has adequate strength, after consideration of the corrosion allowance, to withstand the operating pressure, operating temperature, and seismic loads.	Drawings listed above under References; Mechanical Data Sheets listed above under References; 24590-WTP-3PS-MV-TP001, Rev.1, Engineering Specification for Pressure Vessel Design and Fabrication; 24590-WTP-3PS-MV00-TP002, Rev. 1, Engineering Specification for Seismic Qualification Criteria for Pressure Vessels; 24590-WTP-3PS-SS90-T0001, Rev. 0, Engineering Specification for Seismic Qualification of Seismic Category I/II Equipment and Tanks; AISC 4-98, Seismic Analysis of Safety Related Nuclear Structures and Commentary; 24590-PTF-3YD-UFP-00001, Rev. 0, System Description for Ultrafiltration Process System (UFP).	The Mechanical Data Sheets identify each vessel's operating pressure and temperature ranges, the materials selected for each vessel, the corrosion allowance(s), and the vessel quality levels which determine the requirements for seismic design. The design specifications for the vessels require specific consideration of the operating pressures and temperatures and seismic loads in the design process. ASME Section VIII, Div. 1 requires that corrosion allowance thickness shall be excluded from nominal vessel thickness when evaluating the adequacy of vessel components for these loads at end of life. The Engineering Specification for Seismic Qualification Criteria for Pressure Vessels adopts ASME Section VIII, Div. 2 design rules to address seismic design and analysis of the vessel and ASME Section VIII, Div. 1 for the vessel supports. Detailed requirements for seismic design of SC-I/II vessels are furnished in the specification for Seismic Qualification of Seismic Category I/II Equipment and Tanks. These codes and standards are adequate and appropriate for design of the UFP vessels to withstand operating pressure, temperature, and seismic loads for the specified design life.

Foundation	Vessel foundation will maintain the load of a full vessel.	Drawings listed above under references; 24590-WTP-DB-ENG-01-001, Rev. 1, Basis of Design; 24590-WTP-3PS-MV00-TP001, Rev. 1, Engineering Specification for Pressure Vessel Design and Fabrication.	The Engineering Specification for Pressure Vessel Design and Fabrication requires the use of ASME B&PV Code, Section VIII, Division I for design of the vessel supports. This code ensures an adequate design for the vessel supports. Chapter 14 of the Basis of Design document requires that the vessel foundation design must be adequate to support the loads from full vessels.
	If in an area subject to flooding, the vessel is anchored.	24590-WTP-3PS-MV00-TP001, Rev. 1, Engineering Specification for Pressure Vessel Design and Fabrication.	Buoyant forces of an empty vessel in a flooded room are a mandatory standard design load case in this specification for Pressure Vessel Design and Fabrication.
	Vessel system will withstand the effects of frost heave.	24590-WTP-DB-ENG-01-001, Rev. 1, Basis of Design.	The Basis of Design document requires that all structural foundations extend a distance below grade that exceeds the depth of the frost line. The vessels are inside the building at floor Elevation 0'-0" and therefore, are not subject to frost heave.

Waste Characteristics	Characteristics of the waste to be stored or treated have been identified (ignitable, reactive, toxic, specific gravity, vapor pressure, flash point, storage temperature)	Mechanical Data Sheets listed above under References; Vessel/Tank Material Selection Data Sheet, 24590-PTF-N1D-UFP-P0003, Rev. 0, UFP-VSL-00002A/B (PTF) Ultrafiltration Feed Vessels ; 24590-WTP-PSAR-ESH-01-002-02, Rev. 1, Preliminary Safety Analysis Report: PT Facility Specific Information; WA7890008967, *Dangerous Waste Portion of the Hanford Facility Resource Conservation and Recovery Act Permit for the Treatment, Storage, and Disposal of Dangerous Waste,* Chapter 10, and Attachment 51, "Hanford Tank Waste Treatment and Immobilization Plant."	The Mechanical Data Sheets present the waste specific gravity, storage temperatures and pressures. The Vessel/Tank Material Selection Data Sheet addresses the pH range and chemical composition of the waste to select appropriate vessel materials and specify the corrosion allowance. Other waste characteristics that are hazardous, such as ignitability, reactivity, and toxicity are addressed by the Preliminary Safety Analysis Report for the PTF and in Part A of the Permit as an integral part of the design process. The UFP vessels provide primary confinement of the waste during normal operations, abnormal operations and during and after a Design Basis Earthquake. The vessels must retain integrity to insure that the hydrogen controls for the vessel head space continue functioning. The internal Pulse Jet Mixers must remain functional to prevent hydrogen buildup in the vessel sludge. The hydrogen dilution air supply and the PTF Process Vessel Vent System must retain integrity and remain functional to provide continuing hydrogen control. The vessels are grounded to control ignition sources.
	Vessel is designed to store or treat the wastes with the characteristics defined above and any treatment reagents.	Vessel/Tank Material Selection Data Sheet, 24590-PTF-N1D-UFP-P0003, Rev. 0, Ultrafiltration Feed Vessels, UFP-VSL-00002A/B; 24590-PTF-3YD-UFP-00001, Rev. 0, System Description for Ultrafiltration Process System (UFP).	The Vessel/Tank Material Selection Data Sheet demonstrates that the vessel is designed to process the wastes discussed above. The System Description discusses normal and abnormal operations for the UFP vessels. Compatible chemicals reagents may be added to the vessels for treatment of solids washing and/or caustic leaching, or via chemical cleaning of filters through nitric acid additions. Acid or water will be used for flushing/rinsing.
	The waste types are compatible with each other.	24590-PTF-3YD-UFP-00001, Rev. 0, System Description for Ultrafiltration Process System (UFP).	The System Description for the Ultrafiltration Process System (UFP) does not describe any operations where incompatible wastes are mixed in these vessels for processing. The UFP vessels function primarily to prepare the waste for processing by other components of the UFP in the Pretreatment facility.

Corrosion Protection	Vessel material and protective coatings ensure the vessel structure is adequately protected form the corrosive effects of the waste stream and external environments (expected to not leak or fail for the design life of the system)	Drawings listed above under References; Mechanical Data Sheets listed above under References; Vessel/Tank Material Selection Data Sheet; 24590-PTF-N1D-UFP-P0003, Rev. 0, Ultrafiltration Feed Vessels, UFP-VSL-00002A/B; 24590-PTF-3YD-UFP-00001, Rev. 0, System Description for Ultrafiltration Process System (UFP).	The Vessel/Tank Material Selection Data Sheet shows that the Ultrafiltration Feed Vessels, UFP-VSL-00002A/B normally operate at atmospheric pressure, pH 13, and a temperature of about 77 °F. The assembly is designed for 15 psig pressure and 225 °F temperature. Potential acid cleaning operations of the vessels were also considered. The material selected is 304L and a corrosion allowance of 0.04 in. The UFP vessels have cooling jackets around them to maintain the desired temperature of the waste. The PJMs are designed for 80 psig and 225 °F temperature. The UFP vessels are located in cells at Elevation 0'-0" in the PTF. These cells are equipped with liners, sumps and wash down nozzles to mitigate potential leaks. Therefore, the cells should remain dry during normal operations which will limit external corrosion of the vessels over the facility design life. These UFP vessels receive waste from UFP Feed Preparation Vessels (UFP-VSL-00001A/B) to be sent to Ultrafilters (UFP-FILT-00001, 2, 3 A/B) for further processing.
Corrosion Allowance	Corrosion allowance is adequate for the intended service life of the vessel.	Mechanical Data Sheets listed above under References; Vessel/Tank Material Selection Data Sheet; 24590-PTF-N1D-UFP-P0003, Rev. 0, Ultrafiltration Feed Vessels, UFP-VSL-00002A/B.	The bases for the UFP vessels material selection and corrosion allowance are furnished in the Vessel/Tank Material Selection Data Sheet. Selection of 304L with a corrosion allowance of 0.04 in. for a service life of 40 years is adequate and appropriate. The material selections and corrosion allowances are carried forward to the Mechanical Data Sheets consistently and correctly.
Pressure Relief	Pressure controls (vents and relief valves) are adequately designed to ensure pressure relief if normal operating pressures in the vessel are exceeded.	Drawings listed above under References; 24590-PTF-3YD-UFP-00001, Rev. 0, System Description for Ultrafiltration Process System (UFP).	The UFP Ultrafiltration Feed Vessels, UFP-VSL-00002A/B vessels are designed to overflow through 8" diameter lines to the Plant Overflow Vessel (PWD-VSL-00033) located at Elevation (-) 45'-0", as shown on the drawings. These unrestricted overflow lines are tied to the vessel vent system to prevent over pressurization of the vessels.

Scope	Scope of this Integrity Assessment	This integrity assessment includes: The three Ultrafiltration Process System, Ultrafilter Permeate Collection Vessels: UFP-VSL-00062A/B/C including their appurtenances or offspring items, which are located in process cells at Elevation 0'-0" in the Pretreatment Facility.
References	Drawings and Mechanical Data Sheets	Drawings: 24590-PTF-MV-UFP-P0005, Rev. 0, Equipment Assembly Ultrafilter Permeate Vessel (UFP-VSL-00062A); 24590-PTF-MV-UFP-P0006, Rev. 0, Equipment Assembly Ultrafilter Permeate Vessel (UFP-VSL-00062B); 24590-PTF-MV-UFP-P0007, Rev. 0, Equipment Assembly Ultrafilter Permeate Vessel (UFP-VSL-00062C); 24590-PTF-M6-UFP-P0004, Rev. 0, P & ID-PTF Ultrafiltration Permeate Collection System Vessels (UFP-VSL-00062A/B/C); 24590-PTF-P1-P01T-P0001, Rev. 2, Pretreatment Facility General Arrangement Plan at El. 0'-0"; 24590-PTF-P1-P01T-P0008, Rev. 3, Pretreatment Facility General Arrangement Section B-B; 24590-PTF-P1-P01T-P0009, Rev. 6, Pretreatment Facility General Arrangement Section C-C; 24590-PTF-P1-P01T-P0014, Rev. 5, Pretreatment Facility General Arrangement Sect. L-L and Sect. K-K; 24590-PTF-P1-P01T-P0015, Rev. 5, Pretreatment Facility General Arrangement Sect. M-M; 24590-PTF-M5-V17T-P0011, Rev. 0, Process Flow Diagram Ultrafiltration Permeate Collection System UFP. Mechanical Data Sheets: 24590-PTF-MVD-UFP-P0005, Rev.0, Ultrafilter Permeate Collection Vessel (UFP-VSL-00062A); 24590-PTF-MVD-UFP-P0006, Rev.0, Ultrafilter Permeate Collection Vessel (UFP-VSL-00062B); 24590-PTF-MVD-UFP-P0007, Rev.0, Ultrafilter Permeate Collection Vessel (UFP-VSL-00062C).
Summary of Assessment		For each item of "Information Assessed" (i.e., Criteria) on the following pages, the items listed under "Source of Information" were reviewed and found to furnish adequate design controls and requirements to ensure the design intent fully satisfies the requirements of Washington Administrative Code, WAC-173-303-640, *Dangerous Waste Regulations.*

	Information Assessed	Source of Information	Assessment
Design	Vessel design standards are appropriate and adequate for the vessel's intended use.	Drawings listed above under References; Mechanical Data Sheets listed above under References; 24590-WTP-3PS-MV00-TP001, Rev. 1, Engineering Specification for Pressure Vessel Design and Fabrication; 24590-WTP-3PS-MV00-TP003, Rev. 1, Engineering Specification for Pressure Vessel Fatigue Analysis; SCN No. 24590-WTP-3PN-MV00-00004, Pressure Vessel Fatigue Analysis; 24590-WTP-3PS-MVB2-T0001, Rev. 1, Engineering Specification for Welding of Pressure Vessels, Heat Exchangers and Boilers; 24590-WTP-3PS-G000-TP002, Rev. 2, Positive Material Identification (PMI); 24590-WTP-3PS-G000-T0001, Rev. 0, General Specification for Supplier Quality Assurance Program Requirements; 24590-WTP-3PS-M000-T0002, Rev. 1, General Specification for Mechanical Handling Equipment Design and Manufacture; 24590-PTF-3YD-UFP-00001, Rev. 0, System Description for Ultrafiltration Process System (UFP). SDCN No. 24590-PTF-3YN-UFP-00001, System Description for Ultrafiltration Process System (UFP);	The UFP system Ultrafilter Permeate Collection Vessels, UFP-VSL-00062A/B/C vessels and all appurtenances are to be designed to the ASME Section VIII, Division 1 rules which are appropriate for pressure vessels operating with mixed waste solutions over the pressure and temperature ranges specified for these vessels. Supplementary requirements are specified in the Engineering Specification for Pressure Vessel Design and Fabrication. Supplementary requirements address pressure vessel fatigue analysis, positive material identification, lifting attachment design, equipment drop evaluation, fabrication tolerances, acceptable welding procedures for the vessel and appurtenances, welder qualifications and testing records, NDE inspections and records, and lifting, packaging, shipping, handling and storage requirements. Some of the vessel internal equipment is subject to cyclic loading. The fatigue design standards, ASME Section VIII, Division 2, are appropriate for components with a high number of load cycles. These are adequate and acceptable design standards for the intended use of the vessels. The Ultrafilter Permeate Collection Vessels, UFP-VSL-00062A/B/C assemblies are vertical vessels with a 15 ft ID and a vertical length of 21'-3" tangent to tangent, and each vessel is supported on a cylindrical skirt (9/16" thick by approximately 5'-0" high) which in turn is supported on a base plate beam. Top and bottom heads are ellipsoidal with minimum thickness of 9/16". The shells are specified to be 7/8" thick. There are total of 12 internal vessels: six Pulse Jet Mixers (PJMs) and six Charge Vessels for the Reverse Flow Diverters (RFDs). Material for the shells, heads, support skirts, and vessel's internal equipment including the PJMs, Charge Vessels, and RFDs is SA-240 316L stainless steel (0.030 % maximum carbon content, dual certified) hereafter referred to as 316L. The support base plate beams are A 572 Gr. 50 steel. The operating volume is to be approximately 30,000 gallons and the total internal volume is to be about 34,700 gallons.

	Information Assessed	Source of Information	Assessment
Design	If a non-standard vessel is to be used, the design calculations demonstrate sound engineering principles of construction.	Drawings listed above under References; Mechanical Data Sheets listed above under References; 24590-WTP-3PS-MV00-TP001, Rev. 1, Engineering Specification for Pressure Vessel Design and Fabrication; 24590-WTP-3PS-MV00-TP003, Rev. 1, Engineering Specification for Pressure Vessel Fatigue Analysis; PDC No. 24590-WTP-PEN-03-002, PEN Title: Changes to the Permit Specification 24590-WTP-3PS-MV00-TP003, Rev. 1, Engineering Specification for Pressure Vessel Fatigue Analysis; PDC No. 24590-WTP-PEN-03-001, PEN Title: Changes to the Permit Specification 24590-WTP-3PS-MV00-TP002, Rev. 1, Engineering Specification for Seismic Qualification Criteria for Pressure Vessels; 24590-WTP-3PS-MV00-TP002, Rev. 1, Engineering Specification for Seismic Qualification Criteria for Pressure Vessels; 24590-WTP-3PS-SS90-T0001, Rev. 0, Engineering Specification for Seismic Qualification of Seismic Category I/II Equipment and Tanks; AISC 4-98, Seismic Analysis of Safety Related Nuclear Structures and Commentary.	The UFP Ultrafilter Permeate Collection Vessels, UFP-VSL-00062A/B/C vessels are standard ASME Section VIII vessels. The Mechanical Data Sheets require that the ASME Section VIII, Division 1 vessels be delivered after design, fabrication, inspection and testing with an ASME code stamp and that the vessels be nationally registered. Supplemental design information is provided by the reference documents listed in the Source of Information column for utilizing sound engineering principles of construction for the vessels.

	Information Assessed	Source of Information	Assessment
Design	Vessel has adequate strength, after consideration of the corrosion allowance, to withstand the operating pressure, operating temperature, and seismic loads.	Drawings listed above under References; Mechanical Data Sheets listed above under References; 24590-WTP-3PS-MV-TP001, Rev.1, Engineering Specification for Pressure Vessel Design and Fabrication; 24590-WTP-3PS-MV00-TP002, Rev. 1, Engineering Specification for Seismic Qualification Criteria for Pressure Vessels; 24590-WTP-3PS-SS90-T0001, Rev. 0, Engineering Specification for Seismic Qualification of Seismic Category I/II Equipment and Tanks; AISC 4-98, Seismic Analysis of Safety Related Nuclear Structures and Commentary; 24590-PTF-3YD-UFP-00001, Rev. 0, System Description for Ultrafiltration Process System (UFP).	The Mechanical Data Sheets identify each vessel's operating pressure and temperature ranges, the materials selected for each vessel, the corrosion allowance(s), and the vessel quality levels which determine the requirements for seismic design. The design specifications for the vessels require specific consideration of the operating pressures and temperatures and seismic loads in the design process. ASME Section VIII, Div. 1 requires that corrosion allowance thickness shall be excluded from nominal vessel thickness when evaluating the adequacy of vessel components for these loads at end of life. The Engineering Specification for Seismic Qualification Criteria for Pressure Vessels adopts ASME Section VIII, Div. 2 design rules to address seismic design and analysis of the vessel and vessel supports. Detailed requirements for seismic design of SC-I/II vessels are furnished in the specification for Seismic Qualification of Seismic Category I/II Equipment and Tanks. These codes and standards are adequate and appropriate for design of the UFP vessels to withstand operating pressure, temperature, and seismic loads for the specified design life.

	Information Assessed	Source of Information	Assessment
Foundation	Vessel foundation will maintain the load of a full vessel.	Drawings listed above under references; 24590-WTP-DB-ENG-01-001, Rev. 1, Basis of Design; 24590-WTP-3PS-MV00-TP001, Rev. 1, Engineering Specification for Pressure Vessel Design and Fabrication.	The Engineering Specification for Pressure Vessel Design and Fabrication requires the use of ASME B&PV code, Section VIII, Division I for design of the vessel supports. This code assures an adequate design for the vessel supports. Chapter 14 of the Basis of Design document requires that the vessel foundation design must be adequate to support the loads from full vessels.
	If in an area subject to flooding, the vessel is anchored.	24590-WTP-3PS-MV00-TP001, Rev. 1, Engineering Specification for Pressure Vessel Design and Fabrication.	Buoyant forces of an empty vessel in a flooded room are a mandatory standard design load case in this specification for Pressure Vessel Design and Fabrication
	Vessel system will withstand the effects of frost heave.	24590-WTP-DB-ENG-01-001, Rev. 1, Basis of Design.	The Basis of Design document requires that all structural foundations extend a distance below grade that exceeds the depth of the frost line. The vessels are inside the building at floor Elevation 0'-0" and therefore, are not subject to frost heave.
Waste Characteristics	Characteristics of the waste to be stored or treated have been identified (ignitable, reactive, toxic, specific gravity, vapor pressure, flash point, storage temperature)	Mechanical Data Sheets listed above under References; Vessel/Tank Material Selection Data Sheet, 24590-PTF-N1D-UFP-P0008, Rev. 0, UFP-VSL-00062A/B/C (PTF) Ultrafilter Permeate Collection Vessel; 24590-WTP-PSAR-ESH-01-002-02, Rev. 1, Preliminary Safety Analysis Report: PT Facility Specific Information; WA7890008967, *Dangerous Waste Portion of the Hanford Facility Resource Conservation and Recovery Act Permit for the Treatment, Storage, and Disposal of Dangerous Waste,* Chapter 10, and Attachment 51, "Hanford Tank Waste Treatment and Immobilization Plant."	The Mechanical Data Sheets present the waste specific gravity, storage temperatures and pressures. The Vessel/Tank Material Selection Data Sheet addresses the pH range and chemical composition of the waste to select appropriate vessel materials and specify the corrosion allowance. Other waste characteristics that are hazardous, such as ignitability, reactivity, and toxicity are addressed by the Preliminary Safety Analysis Report for the PTF and in Part A of the Permit as an integral part of the design process. The UFP vessels provide primary confinement of the waste during normal operations, abnormal operations and during and after a Design Basis Earthquake. The vessels must retain integrity to insure that the hydrogen controls for the vessel head space continue functioning. The internal Pulse Jet Mixers must remain functional to prevent hydrogen buildup in the vessel sludge. The hydrogen dilution air supply and the PTF Process Vessel Vent System must retain integrity and remain functional to provide continuing hydrogen control. The vessels are grounded to control ignition sources.

	Information Assessed	Source of Information	Assessment
	Vessel is designed to store or treat the wastes with the characteristics defined above and any treatment reagents.	Vessel/Tank Material Selection Data Sheet, 24590-PTF-N1D-UFP-P0008, Rev. 0, UFP-VSL-00062A/B/C (PTF) Ultrafilter Permeate Collection Vessel; 24590-PTF-3YD-UFP-00001, Rev. 0, System Description for Ultrafiltration Process System (UFP).	The Vessel/Tank Material Selection Data Sheet demonstrates that the vessel is designed to process the wastes discussed above. The System Description discusses normal and abnormal operations for the UFP vessels. Compatible chemicals reagents may be added to the vessels for treatment of solids washing and/or caustic leaching, or via chemical cleaning of filters through nitric acid additions. Acid or water will be used for flushing/rinsing.
	The waste types are compatible with each other.	24590-PTF-3YD-UFP-00001, Rev. 0, System Description for Ultrafiltration Process System (UFP).	The System Description for the Ultrafiltration Process System (UFP) does not describe any operations where incompatible wastes are mixed in these vessels for processing. The UFP vessels function primarily to prepare the waste for processing by other components of the UFP in the Pretreatment facility.
Corrosion Protection	Vessel material and protective coatings ensure the vessel structure is adequately protected form the corrosive effects of the waste stream and external environments (expected to not leak or fail for the design life of the system)	Drawings listed above under References; Mechanical Data Sheets listed above under References; Vessel/Tank Material Selection Data Sheet; 24590-PTF-N1D-UFP-P0008, Rev. 0, UFP-VSL-00062A/B/C (PTF) Ultrafilter Permeate Collection Vessel; 24590-PTF-3YD-UFP-00001, Rev. 0, System Description for Ultrafiltration Process System (UFP).	The Vessel/Tank Material Selection Data Sheet shows that the Ultrafilter Permeate Collection Vessels, UFP-VSL-00062 A/B/C normally operate at atmospheric pressure, pH 13, and temperature of about 77 °F. The assembly is designed for 15 psig pressure and 120 °F temperature. Potential acid cleaning operations of the vessels were also considered. The material selected is 316L and a corrosion allowance of 0.04 in. The PJMs and Charge Vessels are designed for 80 psig and 120°F temperature. The UFP vessels are located in cells at Elevation 0'-0" in the PTF. These cells are equipped with liners, sumps and wash down nozzles to mitigate potential leaks. Therefore, the cells should remain dry during normal operations which will limit external corrosion of the vessels over the facility design life. These UFP vessels receive permeate from Ultrafilters (UFP-FILT-0001, 2, 3 A/B) to be sent to Cesium Ion Exchange or to solids wash to Effluent Collection for further processing.

	Information Assessed	Source of Information	Assessment
Corrosion Allowance	Corrosion allowance is adequate for the intended service life of the vessel.	Mechanical Data Sheets listed above under References; Vessel/Tank Material Selection Data Sheet, 24590-PTF-N1D-UFP-P0008, Rev. 0, UFP-VSL-00062A/B/C (PTF) Ultrafilter Permeate Collection Vessel.	The bases for the UFP vessels material selection and corrosion allowance are furnished in the Vessel/Tank Material Selection Data Sheet. Selection of 316L material with a corrosion allowance of 0.04 in. for a service life of 40 years is adequate and appropriate. The material selections and corrosion allowances are carried forward to the Mechanical Data Sheets consistently and correctly.
Pressure Relief	Pressure controls (vents and relief valves) are adequately designed to ensure pressure relief if normal operating pressures in the vessel are exceeded.	Drawings listed above under References; 24590-PTF-3YD-UFP-00001, Rev. 0, System Description for Ultrafiltration Process System (UFP).	The UFP Ultrafiltration Permeate Collection Vessels, UFP-VSL-00062A/B/C vessels are designed to overflow through 6" diameter lines to the Plant Overflow Vessel (PWD-VSL-00033) located at Elev.(-) 45'-0", as shown on the drawings. These unrestricted overflow lines are tied to the vessel vent system to prevent over pressurization of the vessels.

Job No. 24590

Bechtel National, Inc.

SUPPLIER DOCUMENT STATUS

1. [X] **Work may proceed.**
2. [ ] **Revise and resubmit. Work may proceed subject to resolution of indicated comments.**
3. [ ] **Revise and resubmit. Work may not proceed.**
4. [ ] **Review not required. Work may proceed.**

Permission to proceed does not constitute acceptance or approval of design details, calculations, analyses, test methods, or materials developed or selected by the supplier and does not relieve supplier from full compliance with contractual obligations.

REVIEWED									

G-321 Document Category N/A
[From Supplement A to G-321-E (E) or G-321-V (V), as applicable, or "N/A" if SSRS is used]

Supersedes BNI Document No. N/A Rev. _____
[When applicable]

Accepted by DC Pflinger (Print Name) DC Pflinger (Signature) 3/2/04 (Date)

Released by N/A (Print Name) _____ (Signature) _____ (Date)
[When applicable]

416 GP&S 7-03

24590-CM-HC4-HXYG-00138-02-00013

REV. 00A

SUBCONTRACT SUBMITTAL

Best Available Copy

R10222328

IQRPE REVIEW
OF
THE PRETREATMENT FACILITY PLANT WASH AND DISPOSAL SYSTEM ANCILLARY EQUIPMENT

"I, Tarlok S. Hundal, have reviewed, and certified a portion of the design of a new tank system or component located at the Hanford Waste Treatment Plant, owned/operated by Department of Energy, Office of River Protection, Richland, Washington. My duties were independent review of the current design for the Pretreatment Facility (PTF) Plant Wash System (PWD) Ancillary Equipment as required by the Dangerous Waste Regulations, namely, WAC 173-303-640(3) (applicable paragraphs (i.e., (a) through (g)."

"I certify under penalty of law that I have personally examined and am familiar with the information submitted in this document and all attachments and that, based on my inquiry of those individuals immediately responsible for obtaining the information, I believe that the information is true, accurate, and complete. I am aware that there are significant penalties for submitting false information, including the possibility of fine and imprisonment."

The documentation reviewed indicates that the design intent fully satisfies the requirements of the WAC.

The attached review is 10 pages numbered 1 through 10.

TARLOK SINGH HUNDAL
STATE OF WASHINGTON
20213
REGISTERED
PROFESSIONAL ENGINEER

EXPIRES: 02/15/06

Signature

3/1/04
Date

24590-CM-HC4-HXYG-00138-02-00013 REV. 00A

STRUCTURAL INTEGRITY ASSESSMENT OF THE PRETREATMENT FACILITY (PTF) PLANT WASH AND DISPOSAL SYSTEM (PWD ANCILLARY EQUIPMENT

COGEMA-IA-036
REV. 0

Please note that source, special nuclear and byproduct materials, as defined in the Atomic Energy Act of 1954 (AEA), are regulated at the U.S. Department of Energy (DOE) facilities exclusively by DOE acting pursuant to its AEA authority. DOE asserts, that pursuant to the AEA, it has sole and exclusive responsibility and authority to regulate source, special nuclear, and byproduct materials at DOE-owned nuclear facilities. Information contained herein on radionuclides is provided for process description purposes only.

Scope	Scope of this Integrity Assessment	This Integrity Assessment addresses the ancillary equipment (piping and pipe supports) for the Pretreatment Facility Plant Wash and Disposal System. This includes the following plant components: 1. Ancillary Equipment associated with three vessels: One Plant Wash Vessel (PWD-VSL-00044) located in Cell P-0104 at grade (Elev. 0'-0"), one Ultimate Overflow Vessel (PWD-VSL-00033) located in Cell P-B003 at Elev. (-) 45'-0", and one HLW Effluent Transfer Vessel (PWD-VSL-00043) located in Cell P-B002 at Elev. (-) 45'-0". The ancillary equipment associated with these three vessels is shown on P&ID drawings 24590-PTF-M6-PWD-P0001 and –P0002. 2. Ancillary Equipment associated with two vessels: Acidic/Alkaline Effluent Vessels (PWD-VSL-00015/00016) located in Cell P-0109 at grade (Elev. 0'-0"). The ancillary equipment associated with these two vessels is shown on P&ID drawing 24590-PTF-M6-PWD-P0003. Note: Additional ancillary equipment information associated with the above listed vessels and other plant components, such as process cell floor drains, sump leak detection systems, vessels, tanks, plant wash racks, cell sumps, effluent collection header drains, vent headers, breakpots, bulges, ion exchange columns, demisters, scrubbers, collection header overflows, etc., is shown on the drawings listed in the References below. Ancillary equipment located inside the PWD system vessels is addressed separately in the Integrity Assessments for these vessels.
Summary of Assessment		For each item of "Information Assessed" (i.e., Criteria) on the following pages, the items listed under "Source of Information" were reviewed and found to furnish adequate design controls and requirements to ensure the design intent fully satisfies the requirements of Washington Administrative Code, WAC-173-303-640, *Dangerous Waste Regulations* for Tank Systems.

References	Drawings, System Description, and Plant Item Material Selection Data Sheets	Drawings: 24590-PTF-P1-P01T-P0001, Rev. 2, Pretreatment Facility General Arrangement Plan at El. 0'-0"; 24590-PTF-P1-P01T-P0006, Rev. 1, Pretreatment Facility General Arrangement Plan at El. (-) 45'-0"; 24590-PTF-M6-PWD-P0001, Rev. 0, P&ID – PTF Plant Wash & Disposal System Effluent Collection Tree; 24590-PTF-M6-PWD-P0002, Rev. 2, P&ID – PTF Plant Wash & Disposal System Effluent Collection PWD-VSL-00033/00043/00044; 24590-PTF-M6-PWD-P0003, Rev. 0, P&ID – PTF Plant Wash & Disposal System Effluent Collection PWD-VSL-00015/00016; 24590-PTF-M6-PWD-P0005, Rev. 0, P&ID – PTF Plant Wash & Disposal System Effluent Collection Header Drains; 24590-PTF-M6-PWD-P0006, Rev. 0, P&ID – PTF Plant Wash & Disposal System Effluent Collection Header, Overflows; 24590-PTF-M6-PWD-P0007, Rev. 0, P&ID – PTF Plant Wash & Disposal System Effluent Collection Header Bulge & Rack Drains; 24590-PTF-M6-PWD-P0008, Rev. 0, P&ID – PTF Plant Wash & Disposal System C5/R5 Process Cell Sumps; 24590-PTF-M6-PWD-P0009, Rev. 0, P&ID – PTF Plant Wash & Disposal System C5/R5 Process Cell Sumps; 24590-PTF-M6-PWD-P0010, Rev. 0, P&ID – PTF Plant Wash & Disposal System C3/R3/C5/R5 Process Cell Sumps; 24590-PTF-M6-PWD-P0011, Rev. 0, P&ID – PTF Plant Wash & Disposal System C5/R5 and C5 Area Floor Drains; 24590-PTF-M6-PWD-P0012, Rev. 2, P&ID – PTF Plant Wash & Disposal System C3/R3 and C5/R5 Cell Sumps; 24590-PTF-M6-PWD-P0014, Rev. 0, P&ID – PTF Plant Wash & Disposal System C5/R5 Hot Cell Sumps; 24590-PTF-M6-PWD-P0018, Rev. 0, P&ID – PTF Plant Wash & Disposal System Utility Services-PSA Rack; 24590-PTF-M6-PWD-P0019, Rev. 0, P&ID – PTF Plant Wash & Disposal System Utility Services-PSA Rack; 24590-PTF-M6-PWD-P0020, Rev. 0, P&ID – PTF Plant Wash & Disposal System Utility Services-PSA Rack; 24590-PTF-M6-PWD-P0021, Rev. 0, P&ID – PTF Plant Wash & Disposal System Utility Services-PSA Rack; 24590-PTF-M6-PWD-P0023, Rev. 0, P&ID – PTF Plant Wash & Disposal System Utility Services-PSA Rack; 24590-PTF-M6-PWD-P0024, Rev. 0, P&ID – PTF Plant Wash & Disposal System Utility Services-PSA Rack; 24590-PTF-M6-PWD-P0025, Rev. 0, P&ID – PTF Plant Wash & Disposal System Utility Services-PSA Rack;

References	Drawings, System Description, and Plant Item Material Selection Data Sheets	24590-PTF-M6-PWD-P0026, Rev. 0, P&ID – PTF Plant Wash & Disposal System Utility Services-Plant Wash Rack; 24590-PTF-M6-PWD-P0029, Rev. 0, P&ID – PTF Plant Wash & Disposal System Utility Services-Plant Wash Rack; 24590-PTF-M6-PWD-P0033, Rev. 0, P&ID – PTF Plant Wash & Disposal System Utility Services-Plant Wash Rack; 24590-PTF-M6-PWD-P0034, Rev. 0, P&ID – PTF Plant Wash & Disposal System Utility Services-Plant Wash Rack; 24590-PTF-M6-PWD-P0041, Rev. 2, P&ID – PTF Plant Wash & Disposal System C2 Area Floor Drains Collection Vessel; 24590-PTF-M6-PWD-P0043, Rev. 2, P&ID – PTF Plant Wash & Disposal System C3 Area Floor Drains; 24590-PTF-M6-PWD-P0044, Rev. 0, P&ID – PTF Plant Wash & Disposal System C3 Area Floor Drains; 24590-PTF-M6-PWD-P0046, Rev. 0, P&ID – PTF Plant Wash & Disposal System Utility Services-Plant Wash Rack; 24590-PTF-M6-PWD-P0050, Rev. 0, P&ID – PTF Plant Wash & Disposal System Secondary Containment Leak Detection System; 24590-PTF-M6-PWD-P0051, Rev. 0, P&ID – PTF Plant Wash & Disposal System Secondary Containment Leak Detection System; 24590-PTF-M5-V17T-P0022001, Rev. 0, Process Flow Diagram Pretreatment, Effluent Plant Wash and Disposal System PWD; 24590-PTF-M5-V17T-P0022002, Rev. 2, Process Flow Diagram Pretreatment Plant Wash and Disposal System PWD; System Description: 24590-PTF-3YD-PWD-00001, Rev. 1, System Description for Plant Wash and Disposal System PWD and Radioactive Liquid Waste Disposal System RLD. Plant Item Material Selection Data Sheets: 24590-PTF-N1D-PWD-P0008, Rev. 0, Acidic/Alkaline Effluent Breakpots (PWD-BRKPT-00015/16); 24590-PTF-N1D-PWD-P0007, Rev. 0, Breakpots (PWD-BRKPT-00007/08/09/10/17/19).

	Information Assessed	Source of Information	Discussion
Design	Ancillary equipment design standards are appropriate and adequate for the equipment's intended use.	Drawings listed above under References; 24590-WTP-DC-PS-01-001, Rev. 2, Pipe Stress Design Criteria Including "Pipe Stress Criteria" and "Span Method Criteria"; ASME B31.3 Code, Process Piping, 1996 Edition, American Society of Mechanical Engineers; 24590-WTP-PSAR-ESH-01-002-02, Rev. 1a, Preliminary Safety Analysis Report (PSAR) to Support Construction Authorization: PT Facility Specific Information.	The Pipe Stress Design Criteria specifies ASME B31.3 as the design code for piping systems of the WTP. The P&ID drawings show the ancillary equipment piping and components as Seismic Category (SC-I, II, or III) and Quality Level (QL-1, QL-2, Commercial Grade, or Non-Quality Related). The Pipe Stress Design Criteria document provides a detailed discussion of seismic categories. Quality Levels are discussed in the PSAR. These codes and standards are acceptable and adequate for the design of the ancillary equipment piping and components for their intended service.
	If the ancillary equipment to be used is not built to a design standard, the design calculations demonstrate sound engineering principles of construction.	24590-WTP-DC-PS-01-001, Rev. 2, Pipe Stress Design Criteria Including "Pipe Stress Criteria" and "Span Method Criteria."	The ancillary equipment is to be built to the design standards. The Pipe Stress Design Criteria specifies that piping is to be designed in accordance with ASME B31.3, Code.

	Information Assessed	Source of Information	Discussion
Design	Ancillary equipment has adequate strength at the end of its design life to withstand the operating pressure, operating temperature, thermal expansion, and seismic loads. Equipment is protected against physical damage and excessive stress due to settlement, vibration, expansion, or contraction.	24590-WTP-DC-PS-01-001, Rev. 2, Pipe Stress Design Criteria Including "Pipe Stress Criteria" and "Span Method Criteria"; 24590-WTP-PER-M-02-002, Rev. 0, Materials for Ancillary Equipment; DOE-STD-1020-94, Natural Phenomenon Hazards Design Evaluation Criteria for Department of Energy Facilities (including Change Notice #1, January 1996); ASME BPV Code, Section III, Code Case N-411, Subsection NC, Appendix N, and Appendix F; UBC, Uniform Building Code, 1997 Edition.	The Pipe Stress Design Criteria requires the use of the ASME B31.3 Code and DOE-STD-1020-94 Standard, for piping design. ASME B31.3 requires explicit consideration of operating pressure, operating temperature, thermal expansion/contraction, settlement, vibration, and corrosion allowance in the design of piping. ASME BPV Code, Section III, Code Case N-411, Subsection NC, Appendix N, and Appendix F, and the Uniform Building Code (UBC) are used to supplement the requirements of ASME B31.3 and DOE-STD-1020-94 for design as applicable to the appropriate Seismic Category of the ancillary equipment. Details of the seismic design methods are discussed in the Pipe Stress Design Criteria document. These are appropriate and adequate codes and standards to ensure that the ancillary equipment has adequate strength at the end of its design life to withstand all anticipated loads.

	Information Assessed	Source of Information	Discussion
Supports	Ancillary equipment supports are adequately designed.	24590-WTP-DC-PS-01-002, Rev. 2, Pipe Support Design Criteria; ASME Boiler and Pressure Vessel Code, Section III, Division 1, Rules for Construction of Nuclear Power Plant Components, 1995; 24590-WTP-PER-PS-02-001, Rev. 4, Ancillary Equipment Pipe Support Design; 24590-WTP-PL-PS-01-001, Rev. 1, Verification and Validation Test Plan for Bechtel's ME150 Pipe Support Family of Programs (PCFAPPS).	The Pipe Support Design Criteria document considers all loadings and loading combinations identified in ASME B31.3 and utilizes ASME BPV Code, Section III, Division 1, Subsection NF and Appendix F, to supplement the requirements of ASME B31.3 for seismic design of the applicable Seismic Category of the pipe supports. Bounding load cases are passed to the pipe support designers from the results of the ancillary equipment piping stress analyses. Details of the seismic design methodology are discussed in the Pipe Support Design Criteria document. Examples of typical ancillary equipment supports are shown in the Ancillary Equipment Pipe Support Design document. Analysis is by manual calculation or approved computer programs that have been verified and validated. These are appropriate codes and standards for design of ancillary equipment supports for the PWD system. Ancillary equipment supports are to be designed in such a way that the heat transferred from supports to the building structure does not raise the building structure temperature to exceed 150°F for concrete and 200°F for steel.
Foundations	The system will withstand the effects of frost heave.	Drawings and System Description listed above under References; 24590-WTP-DC-ST-01-001, Rev. 1, Structural Design Criteria.	The PWD system ancillary equipment considered in this assessment is located inside the process cells at Elev. 0'-0" and (-) 45'-0" in the PTF. The Structural Design Criteria requires that all structural foundations shall extend into the surrounding soil below the frost line to preclude frost heave. The PTF facility structural foundations are well below the grade elevation, therefore, the ancillary equipment is not subject to the effects of frost heave.

	Information Assessed	Source of Information	Discussion
Connections	Seams and connections are adequately designed.	24590-WTP-DC-PS-01-001, Rev. 2, Pipe Stress Design Criteria Including "Pipe Stress Criteria" and "Span Method Criteria"; ASME BPV Code, Section IX, Welding and Brazing Qualifications; ASME B16.5, Piping Flanges and Flanged Fittings.	The Pipe Stress Design Criteria specifies the ASME B31.3 Process Piping design code for the piping systems. Welding is to be performed in accordance with the requirements of ASME B31.3 and the ASME BPV Code, Section IX. ASME B16.5 Code is specified for flange designs. These are appropriate codes and standards for the design and fabrication of the PWD System ancillary equipment.
Waste Characteristics	Characteristics of the waste to be stored or treated have been identified (ignitable, reactive, toxic, specific gravity, vapor pressure, flash point, temperature)	System Description listed above under References; 24590-WTP-PSAR-ESH-01-002-02, Rev. 1a, Preliminary Safety Analysis Report to Support Construction Authorization: PT Facility Specific Information; Department of Ecology Permit # WA7890008967, *Dangerous Waste Portion of the Hanford Facility Resource Conservation and Recovery Act Permit for the Treatment, Storage, and Disposal of Dangerous Waste,* Chapter 10, and Attachment 51, "Hanford Tank Waste Treatment and Immobilization Plant."	The ancillary equipment associated with the PWD system serves to transfers waste between numerous plant vessels, tanks, sumps, drains and other components in the PTF. Part of this ancillary equipment also transfers or handles waste from LAW, HLW, LAB and BOP to the PTF for further processing. The ancillary equipment considered in this assessment will handle wastes with the same characteristics as do the source vessels. The waste characteristics of source vessels have been appropriately assessed in separate integrity assessments for the associated vessels. The Preliminary Safety Analysis Report (PSAR) and Part A of the Permit, provide a summary of potential hazardous conditions associated with each Pretreatment Facility vessel and the design provisions that are to be used to provide adequate control of each hazard. Although the PWD vessels and tanks are not considered a hazardous source for hydrogen generation, the Pretreatment Vessel Vent Process System provides offgas control in the vessel/tank head spaces. Air in-bleed lines are provided for each vessel/tank for hydrogen dilution.

	Information Assessed	Source of Information	Discussion
Waste Characteristics	Ancillary equipment is designed to handle the wastes with the characteristics defined above and any treatment reagents.	System Description listed above under References; 24590-WTP-PER-M-02-002, Rev 0, Materials for Ancillary Equipment.	The Materials for Ancillary Equipment document specifies that ancillary equipment materials that contact the waste are to be equal to or better than those of the upstream source vessels. The System Description states that compatible reagents are added to the PWD vessels during normal or non-routine operations.
Compatibility	The pH range of the waste, waste temperature and the corrosion behavior of the structural materials are adequately addressed. Ancillary equipment material and protective coatings ensure the ancillary equipment structure is adequately protected from the corrosive effects of the waste stream and external environments. The protection is sufficient to ensure the equipment will not leak or fail for the design life of the system.	24590-WTP-DB-ENG-01-001, Rev. 1A, Basis of Design; 24590-WTP-PER-M-02-002, Rev. 0, Materials for Ancillary Equipment; 24590-WTP-3PS-NN00-T0001, Rev. 0, Engineering Specification for Hot and Anti-Sweat Thermal Insulation;. 24590-PTF-N1D-PWD-P0008, Rev. 0, Acidic/Alkaline Effluent Breakpots (PWD-BRKPT-00015/16); 24590-PTF-N1D-PWD-P0007, Rev. 0, Breakpots (PWD-BRKPT-00007/08/09/10/17/19).	The Basis of Design document identifies a service design life of 40 years for the ancillary equipment. Detailed materials selection (corrosion) evaluations are conducted for each vessel in the PTF facility during process design to ensure a 40 year service life. The Materials for Ancillary Equipment document requires that the material selection and corrosion/erosion allowances for ancillary equipment in contact with the waste will be equal to or better than the material and corrosion allowance of the waste source vessel. Because of the more severe process conditions, a separate material selection evaluation has been made for the PWD system breakpots. This is documented in the Plant Item Material Selection Data Sheets for the breakpots. The Thermal Insulation specification requires that all insulating materials used on the outside of ancillary equipment be pre-approved for use on austenitic stainless steel in accordance with applicable ASTM procedures and tests to preclude external corrosion of ancillary equipment. Therefore, the ancillary equipment will provide the expected design service life.

	Information Assessed	Source of Information	Discussion
Corrosion Allowance	Corrosion allowance is adequate for the intended service life of the ancillary equipment.	24590-WTP-PER-M-02-002, Rev. 0, Materials for Ancillary Equipment; 24590-WTP-DC-PS-01-001, Rev. 2, Pipe Stress Design Criteria Including "Pipe Stress Criteria" and "Span Method Criteria"; 24590-WTP-PER-PL-02-001, Rev. 3, Piping Material Class Description; 24590-PTF-N1D-PWD-P0008, Rev. 0, Acidic/Alkaline Effluent Breakpots (PWD-BRKPT-00015/16); 24590-PTF-N1D-PWD-P0007, Rev. 0, Breakpots (PWD-BRKPT-00007/08/09/10/17/19).	The Pipe Stress Design Criteria specifies ASME B31.3 as the design code for the WTP piping. Consideration of corrosion, including corrosion allowance, is a mandatory requirement of ASME B31.3. A required service life of 40 years is identified in the Basis of Design document for ancillary equipment. Detailed materials selection (corrosion) evaluations are conducted for each vessel in the PTF facility during process design to ensure a 40 year service life. The Materials for Ancillary Equipment document requires that the downstream ancillary equipment is to be constructed of equal or better materials, and with the same corrosion allowance as the source vessel. Corrosion/Erosion allowances are listed for each Piping Material Class in the Piping Material Class Description document. Because of the more severe process conditions, a separate material selection evaluation has been made for the PWD system breakpots. This is documented in the Plant Item Material Selection Data Sheets for the breakpots.
Strength	Pressure controls (vents and relief valves) are adequately designed to ensure pressure relief if normal operating pressures in the vessels are exceeded.	24590-WTP-DC-PS-01-001, Rev. 2, Pipe Stress Design Criteria Including "Pipe Stress Criteria" and "Span Method Criteria."	The Pipe Stress Design Criteria document specifies ASME B31.3 as the design code for the WTP piping. ASME B31.3 requires provisions be made to safely contain or relieve any pressure to which the piping may be subjected. ASME B31.3 piping not protected by a pressure relieving device, or that can be isolated from a pressure reliving device must be designed for at least the highest pressure that can be developed.

	Information Assessed	Source of Information	Discussion
Strength	Maximum flows and any unusual operating stresses are identified	Drawings listed above under References; 24590-WTP-DC-PS-01-001, Rev. 2, Pipe Stress Design Criteria Including "Pipe Stress Criteria" and "Span Method Criteria"; 24590-WTP-PER-PL-02-001, Rev. 3, Piping Material Class Description.	The expected flow paths for the ancillary equipment are identified on the P&ID drawings. The Pipe Stress Design Criteria specifies ASME B31.3 Code for piping design. This code requires piping to be designed to the highest pressure that can be developed in a piping system ensuring that maximum operating stresses remain within code allowables. Piping material classes are shown on the P&IDs embedded in the item numbers for each ancillary equipment component. The Piping Material Class Description document lists the bounding pressure and temperature limits for each piping material class.
Secondary Containment	Ancillary equipment is designed with secondary containment that is constructed of materials compatible with the waste and of sufficient strength to prevent failure (pressure gradients, waste, climatic conditions, daily operations), provided with a leak-detection system, and designed to drain and remove liquids.	Drawings and System Description listed above under References; 24590-WTP-PER-CSA-02-001, Rev. 4, Secondary Containment Design; 24590-WTP-DB-ENG-01-001, Rev. 1A, Basis of Design.	The Basis of Design document states that ancillary equipment shall be provided with a secondary containment. The ancillary equipment considered in this assessment is located in R3/C3/R5/C5 (process cell) areas within the PTF. These PTF room/cell areas are secondary containment concrete structures including sumps as shown on the general arrangement drawings. The cells and sumps are lined with stainless steel plates as detailed in the Secondary Containment Design document. The secondary containment structures are outside the scope of this integrity assessment and their assessment is conducted in a separate document. Each cell sump is equipped with a leak detection device and a liquid removal device such as steam ejector or electrical pump.

Job No. 24590

Bechtel National, Inc.

SUPPLIER DOCUMENT STATUS

1. [X] **Work may proceed.**
2. [ ] **Revise and resubmit. Work may proceed subject to resolution of indicated comments.**
3. [ ] **Revise and resubmit. Work may not proceed.**
4. [ ] **Review not required. Work may proceed.**

Permission to proceed does not constitute acceptance or approval of design details, calculations, analyses, test methods, or materials developed or selected by the supplier and does not relieve supplier from full compliance with contractual obligations.

REVIEWED										

G-321 Document Category N/A
[From Supplement A to G-321-E (E) or G-321-V (V), as applicable, or "N/A" if SSRS is used]

Supersedes BNI Document No. N/A Rev. 3/3/04
[When applicable]

Accepted by D C Pflueger (Print Name) (Signature) 3/4/04 (Date)

Released by N/A (Print Name) (Signature) (Date)
[When applicable]

416 GP&S 7-03

24590-CM-HC4-HXYG-00138-02-00014

REV. 00A

PURCHASE ORDER SUBMITTAL

Best Available Copy

R10222780

IQRPE REVIEW
OF
PRETREATMENT FACILITY (PTF) PLANT WASH AND DISPOSAL SYSTEM (PWD) VESSELS (PWD-VSL-00015/00016 AND PWD-VSL-00044)

"I, Tarlok S. Hundal, have reviewed, and certified a portion of the design of a new tank system or component located at the Hanford Waste Treatment Plant, owned/operated by Department of Energy, Office of River Protection, Richland, Washington. My duties were independent review of the current design for the Pretreatment Facility (PTF) Plant Wash System (PWD) Vessels (PWD-VSL-00015/00016 and PWD-VSL-00044) as required by the Dangerous Waste Regulations, namely, WAC 173-303-640(3) (applicable paragraphs (i.e., (a) through (g)."

"I certify under penalty of law that I have personally examined and am familiar with the information submitted in this document and all attachments and that, based on my inquiry of those individuals immediately responsible for obtaining the information, I believe that the information is true, accurate, and complete. I am aware that there are significant penalties for submitting false information, including the possibility of fine and imprisonment."

The documentation reviewed indicates that the design intent fully satisfies the requirements of the WAC.

The attached review is 12 pages numbered 1 through 12. Pages 1 through 6 are for Acidic/Alkaline Effluent Vessels (PWD-VSL-00015/00016). Pages 7 through 12 are for Plant Wash Vessel (PWD-VSL-00044).

TARLOK SINGH HUNDAL
STATE OF WASHINGTON
20213
REGISTERED
PROFESSIONAL ENGINEER

EXPIRES: 02/15/06

Signature

3/2/04
Date

24590-CM-HC4-HXYG-00138-02-00014, REV.00A

STRUCTURAL INTEGRITY ASSESSMENT OF THE PRETREATMENT FACILITY (PTF) PLANT WASH AND DISPOSAL SYSTEM (PWD) VESSELS (PWD-VSL-00015/00016 AND PWD-VSL-00044)

COGEMA-IA-037

REV. 0

Please note that source, special nuclear and byproduct materials, as defined in the Atomic Energy Act of 1954 (AEA), are regulated at the U.S. Department of Energy (DOE) facilities exclusively by DOE acting pursuant to its AEA authority. DOE asserts, that pursuant to the AEA, it has sole and exclusive responsibility and authority to regulate source, special nuclear, and byproduct materials at DOE-owned nuclear facilities. Information contained herein on radionuclides is provided for process description purposes only.

Scope	Scope of this Integrity Assessment	This integrity assessment includes two PWD Acidic/Alkaline Effluent Vessels: PWD-VSL-00015/00016, located in a cell (P-0109) at Elevation 0'-0" in the Pretreatment Facility.
References	Specifications, Drawings and Mechanical Data Sheets	The following Specifications are listed in the Material Requisition No. 24590-QL-MRF-MVA0-00001, Rev. 1 (including Material Requisition Supplement Nos. S01 and S03 to Rev. 1): Engineering Specification for Pressure Vessel Design and Fabrication; Engineering Specification for Seismic Qualification Criteria for Pressure Vessels; Specification for Welding of Pressure Vessels, Heat Exchangers and Boilers; General Specification for Supplier Quality Assurance Program Requirements; Specification for Positive Material Identification (PMI); General Specification for Packing, Shipping, Handling, and Storage; Engineering Specification for Pressure Vessel Fatigue Analysis; Engineering Specification for Seismic Qualification of Seismic Category I/II Equipment and Tanks. Drawings: 24590-PTF-MV-PWD-00006, Rev. 0, Equipment Assembly Acidic/Alkaline Effluent Vessel, PWD-VSL-00016 (Q); 24590-PTF-MV-PWD-00007, Rev. 0, Equipment Assembly Acidic/Alkaline Effluent Vessel, PWD-VSL-00015 (Q); 24590-PTF-P1-P01T-P0001, Rev. 2, Pretreatment Facility General Arrangement Plan at El. 0'-0"; 24590-PTF-P1-P01T-P0006, Rev. 1, Pretreatment Facility General Arrangement Plan at El. (-) 45'-0"; 24590-PTF-P1-P01T-P0009, Rev. 6, Pretreatment Facility General Arrangement Section C-C; 24590-PTF-P1-P01T-P0010, Rev. 3, Pretreatment Facility General Arrangement Section D-D; 24590-PTF-P1-P01T-P0011, Rev. 4, Pretreatment Facility General Arrangement Section E-E; 24590-PTF-P1-P01T-P0016, Rev. 3, Pretreatment Facility General Arrangement Sect. P-P and Sect. Q-Q; 24590-PTF-M5-V17T-P0022001, Rev. 0, Process Flow Diagram Pretreatment Effluent Plant Wash and Disposal System PWD 24590-PTF-M5-V17T-P0022002, Rev. 2, Process Flow Diagram Pretreatment Effluent Plant Wash and Disposal System PWD Mechanical Data Sheets: 24590-PTF-MVD-PWD-00011, Rev.3, Mechanical Data Sheet for Acidic/Alkaline Effluent Vessel (PWD-VSL-00015); 24590-PTF-MVD-PWD-00012, Rev.3, Mechanical Data Sheet for Acidic/Alkaline Effluent Vessel (PWD-VSL-00016).
Summary of Assessment		For each item of "Information Assessed" (i.e., Criteria) on the following pages, the items listed under "Source of Information" were reviewed and found to furnish adequate design controls and requirements to ensure the design intent fully satisfies the requirements of Washington Administrative Code, WAC-173-303-640, *Dangerous Waste Regulations* for Tank Systems.

	Information Assessed	Source of Information	Assessment
Design	Vessel design standards are appropriate and adequate for the vessel's intended use.	Specifications listed under Material Requisition, Drawings, and Mechanical Data Sheets listed above under References; ASME Boiler and Pressure Vessel Code, Section VIII, Division 1, Rules for Construction of Nuclear Power Plant Components, 1995; ASME Boiler and Pressure Vessel Code, Section VIII, Division 2, Alternative Rules; 24590-PTF-3YD-PWD-00001, Rev. 1, System Description for Plant Wash and Disposal System PWD and Radioactive Liquid Waste Disposal System PWD.	The Specification for Vessel Design and Fabrication requires the PWD system Acidic/Alkaline Effluent Vessels, PWD-VSL-00015/00016 vessel and all appurtenances to be designed to the ASME Section VIII, Division 1 rules which are appropriate for pressure vessels operating with mixed waste solutions over the pressure and temperature ranges specified for these vessels. Supplementary requirements are specified in the Engineering Specification for Pressure Vessel Design and Fabrication. Supplementary requirements address pressure vessel fatigue analysis, positive material identification, lifting attachment design, equipment drop evaluation, fabrication tolerances, acceptable welding procedures for the vessel and appurtenances, welder qualifications and testing records, NDE inspections and records, and lifting, packaging, shipping, handling and storage requirements. The vessels are subjected to cyclic loading. The Specification for Fatigue Analysis requires the use of ASME Section VIII, Division 2 rules for vessel components with a high number of load cycles. These are adequate and acceptable design standards for the intended use of the vessels. These vessels are vertical with a 264 in. ID and a height of 415 in. from bottom tangent line to top tangent line supported on a cylindrical skirt (approx. 7'-0" high) which in turn is supported on a ring beam anchored to the concrete floor at Elev. 0'-0". The vessels' top and bottom heads are semi-elliptical, built with 1" thick plate. The shell is also specified to be made of 1" thick plate. Each vessel has internal equipment including eight pulse jet mixers, six charge vessels, and six reverse flow diverters/pumps supported from the top head. Material for the vessel's shell, heads, and internal equipment is SA-240 316 stainless steel (0.030% maximum carbon content, dual certified) and is hereafter referred to as 316. The supporting skirt is SA-240 304 stainless steel (0.030% maximum carbon content, dual certified) and is hereafter referred to as 304. The operating vessel volume is to be about 105,850 gallons and the total internal volume is to be about 119,150 gallons.

	Information Assessed	Source of Information	Assessment
Design	If a non-standard vessel is to be used, the design calculations demonstrate sound engineering principles of construction.	Specifications listed under Material Requisition, Drawings, and Mechanical Data Sheets listed above under References.	The PWD Acidic/Alkaline Effluent Vessels, PWD-VSL-00015/00016 are standard ASME Section VIII vessels. The Mechanical Data Sheets require that the ASME Section VIII, Division 1 vessels be delivered after design, fabrication, inspection and testing with an ASME code stamp and that the vessels be nationally registered. Supplemental design information is provided by the reference documents listed in the Source of Information column for utilizing sound engineering principles of construction of the vessels.
	Vessel has adequate strength, after consideration of the corrosion allowance, to withstand the operating pressure, operating temperature, and seismic loads.	Specifications listed under Material Requisition, Drawings, and Mechanical Data Sheets listed above under References; 24590-PTF-3YD-PWD-00001, Rev. 1, System Description for Plant Wash and Disposal System PWD and Radioactive Liquid Waste Disposal System PWD.	The Mechanical Data Sheets identify the vessels' operating pressure and temperature ranges, the materials selected for the vessel, the corrosion allowance, and the vessel quality level and seismic category which determine the requirements for seismic design. The design specification for the vessel requires specific consideration of the operating pressures and temperatures and seismic loads in the design process. ASME Section VIII, Division 1 requires that the corrosion allowance thickness be excluded from the nominal vessel thickness when evaluating the adequacy of vessel components for these loads at the end of life. The Engineering Specification for Seismic Qualification Criteria for Pressure Vessels adopts ASME Section VIII, Division 2 design rules to address seismic design and analysis of the vessel. Detailed requirements for seismic load determination are furnished in the specification for Seismic Category I/II Equipment and Tanks. These codes and standards are adequate and appropriate for the design of the PWD vessels to withstand operating pressure and temperature loads and seismic loads for the specified design life.

	Information Assessed	Source of Information	Assessment
Foundation	Vessel foundation will maintain the load of a full vessel.	Specifications listed under Material Requisition above under References; AISC Manual of Steel Construction, 9th Edition, American Institute of Steel Construction; 24590-WTP-DB-ENG-01-001, Rev. 1A, Basis of Design.	The Engineering Specification for Pressure Vessel Design and Fabrication requires the use of ASME BPV Code, Section VIII, Division 1 and AISC Manual of Steel Construction for the design of the vessel supports. This code ensures an adequate design for the vessel supports. Chapter 14 of the Basis of Design document requires that the vessel foundation design must be adequate to support the loads from full vessels.
	If in an area subject to flooding, the vessel is anchored.	Specifications listed under Material Requisition under References.	Buoyant forces on an empty vessel in a flooded room are mandatory standard design loads in the Specification for Pressure Vessel Design and Fabrication.
	Vessel system will withstand the effects of frost heave.	24590-WTP-DB-ENG-01-001, Rev. 1A, Basis of Design.	The Basis of Design document requires that all structural foundations for outdoor equipment extend a distance below grade that exceeds the depth of the frost line. These vessels are located inside/interior of the building at (Elevation 0'-0" level), therefore, the vessel foundation is not subject to frost heave.

	Information Assessed	Source of Information	Assessment
Waste Characteristics	Characteristics of the waste to be stored or treated have been identified (ignitable, reactive, toxic, specific gravity, vapor pressure, flash point, storage temperature)	Mechanical Data Sheets listed above under References; Vessel/Tank Material Selection Data Sheet, 24590-PTF-N1D-PWD-P0003, Rev. 0, PWD-VSL-000015/00016 (PTF) Acidic/Alkaline Effluent Vessels; 24590-WTP-PSAR-ESH-01-002-02, Rev. 1a, Preliminary Safety Analysis Report to Support Construction Authorization: PT Facility Specific Information; Department of Ecology Permit # WA7890008967, *Dangerous Waste Portion of the Hanford Facility Resource Conservation and Recovery Act Permit for the Treatment, Storage, and Disposal of Dangerous Waste*, Chapter 10, and Attachment 51, "Hanford Tank Waste Treatment and Immobilization Plant."	The Mechanical Data Sheets present the waste specific gravity, storage temperatures and pressures. The Vessel/Tank Material Selection Data Sheet addresses the pH range and chemical composition of the waste to select appropriate vessel materials and specify the corrosion allowance. Other waste characteristics that are hazardous, such as ignitability, reactivity, and toxicity are addressed by the Preliminary Safety Analysis Report for the PTF Building and in Part A of the Permit, as an integral part of the design process. The PWD vessels provide primary confinement of the waste during normal operations, abnormal operations, and during and after a Design Basis Earthquake. Each vessel is provided with an air in-bleed to dilute any hydrogen generated in the vessel. Each vessel also has eight pulse jet mixers to mitigate any such gas buildup in the waste. The vessels are actively vented via the PTF vent system to prevent any build-up of flammable gases. The vessels are grounded to control ignition sources.
	Vessel is designed to store or treat the wastes with the characteristics defined above and any treatment reagents.	Vessel/Tank Material Selection Data Sheet, 24590-PTF-N1D-PWD-P0003, Rev. 0, PWD-VSL-000015/00016 (PTF) Acidic/Alkaline Effluent Vessels; 24590-PTF-3YD-PWD-00001, Rev. 1, System Description for Plant Wash and Disposal System PWD and Radioactive Liquid Waste Disposal System PWD.	The Vessel/Tank Material Selection Data Sheet demonstrates that the vessel is designed to process the wastes discussed above. The System Description discusses normal and abnormal operations for the PWD vessels. Excess acidic effluent is neutralized with 19M sodium hydroxide supplied from a reagent header. Acid and water will be used for flushing/rinsing.
	The waste types are compatible with each other.	24590-PTF-3YD-PWD-00001, Rev. 1, System Description for Plant Wash and Disposal System PWD and Radioactive Liquid Waste Disposal System PWD.	The System Description for the PTF PWD system does not describe any operations where incompatible wastes are mixed in these vessels for processing. The primary function of these vessels is to receive effluent for storage, neutralization, and transfer it to the evaporation systems. The effluent includes plant wash from PTF vessels and sumps, acidic and alkaline generated during pretreatment operations, and solid wash from Ultrafiltration. PWD also receives plant wash from HLW and LAW vitrification, HLW submerged bed scrubbers condensate, and also wastes from the LAB facility. The neutralized effluent of these vessels is sent to the Waste Feed Evaporator Feed Vessels (FEP-VSL-00017A/B) for recycling.

	Information Assessed	Source of Information	Assessment
Corrosion Protection	Vessel material and protective coatings ensure the vessel structure is adequately protected from the corrosive effects of the waste stream and external environments (expected to not leak or fail for the design life of the system)	Drawings and Mechanical Data Sheets listed above under References; Vessel/Tank Material Selection Data Sheet, 24590-PTF-N1D-PWD-P0003, Rev. 0, PWD-VSL-000015/00016 (PTF) Acidic/Alkaline Effluent Vessels; 24590-PTF-3YD-PWD-00001, Rev. 1, System Description for Plant Wash and Disposal System PWD and Radioactive Liquid Waste Disposal System PWD.	The Vessel/Tank Material Selection Data Sheet shows that the PWD Acidic/Alkaline Effluent Vessels, PWD-VSL-00015/00016 normally operate at atmospheric pressure, pH 12, and at 100 °F temperature. The vessel is designed for 15 psig pressure and 237 °F temperature. Potential acid/water cleaning operations of the vessel were also considered. The material selected is 316 and a corrosion allowance of 0.04 in. The PWD vessels are located in the PTF cell (P-0109) at Elevation 0'-0". This cell is equipped with a sump to pump out any leaks. Therefore, the cell should remain dry during normal operations which will limit external corrosion of the vessel over the facility design life.
Corrosion Allowance	Corrosion allowance is adequate for the intended service life of the vessel.	Mechanical Data Sheets listed above under References; Vessel/Tank Material Selection Data Sheet, 24590-PTF-N1D-PWD-P0003, Rev. 0, PWD-VSL-000015/00016 (PTF) Acidic/Alkaline Effluent Vessels.	The bases for the PWD vessels' material selection and corrosion allowance are furnished in the Vessel/Tank Material Selection Data Sheet. Selection of 316 materials with a corrosion allowance of 0.04 in. for a service life of 40 years is adequate and appropriate. The material selection and corrosion allowance of 0.08 in (conservative) is carried forward to the Mechanical Data Sheets.
Pressure Relief	Pressure controls (vents and relief valves) are adequately designed to ensure pressure relief if normal operating pressures in the vessel are exceeded.	Drawings listed above under References; 24590-PTF-3YD-PWD-00001, Rev. 1, System Description for Plant Wash and Disposal System PWD and Radioactive Liquid Waste Disposal System PWD.	The PWD Acidic/Alkaline Effluent Vessels, PWD-VSL-00015/00016 are designed to overflow into each other but ultimately overflow to the Ultimate Overflow Vessel (PWD-VSL-00033) through a 6" diameter unrestricted line. Vessel (PWD-VSL-00033) is located at Elevation (-) 45'-0", as shown on the drawings and described in the System Description document. These PWD vessels are also connected to the PTF vessel vent system to prevent over pressurization of the vessel.

Scope	Scope of this Integrity Assessment	This integrity assessment includes one PWD Plant Wash Vessel: PWD-VSL-00044, located in a cell (P-0104) at Elevation 0'-0" in the Pretreatment Facility.
References	Specifications, Drawings and Mechanical Data Sheet	The following Specifications are listed in the Material Requisition No. 24590-QL-MRE-MVA0-00001, Rev. 1 (including Material Requisition Supplement Nos. S01, S03, and S04 to Rev. 1): Engineering Specification for Pressure Vessel Design and Fabrication; Engineering Specification for Seismic Qualification Criteria for Pressure Vessels; Specification for Welding of Pressure Vessels, Heat Exchangers and Boilers; General Specification for Supplier Quality Assurance Program Requirements; Specification for Positive Material Identification (PMI); General Specification for Packing, Shipping, Handling, and Storage; Engineering Specification for Pressure Vessel Fatigue Analysis; Engineering Specification for Seismic Qualification of Seismic Category I/II Equipment and Tanks. Drawings: 24590-PTF-MV-PWD-00010, Rev. 0, Equipment Assembly Plant Wash Vessel, PWD-VSL-00044 (Q); 24590-PTF-P1-P01T-P0001, Rev. 2, Pretreatment Facility General Arrangement Plan at El. 0'-0"; 24590-PTF-P1-P01T-P0006, Rev. 1, Pretreatment Facility General Arrangement Plan at El. (-) 45'-0"; 24590-PTF-P1-P01T-P0008, Rev. 3, Pretreatment Facility General Arrangement Section B-B; 24590-PTF-P1-P01T-P0009, Rev. 6, Pretreatment Facility General Arrangement Section C-C; 24590-PTF-P1-P01T-P0014, Rev. 5, Pretreatment Facility General Arrangement Sect. L-L and Sect. K-K; 24590-PTF-M5-V17T-P0022001, Rev. 0, Process Flow Diagram Pretreatment Effluent Plant Wash and Disposal System PWD 24590-PTF-M5-V17T-P0022002, Rev. 2, Process Flow Diagram Pretreatment Effluent Plant Wash and Disposal System PWD Mechanical Data Sheet: 24590-PTF-MVD-PWD-00002, Rev. 1, Mechanical Data Sheet for Plant Wash Vessel (PWD-VSL-00044).
Summary of Assessment		For each item of "Information Assessed" (i.e., Criteria) on the following pages, the items listed under "Source of Information" were reviewed and found to furnish adequate design controls and requirements to ensure the design intent fully satisfies the requirements of Washington Administrative Code, WAC-173-303-640, *Dangerous Waste Regulations* for Tank Systems.

	Information Assessed	Source of Information	Assessment
Design	Vessel design standards are appropriate and adequate for the vessel's intended use.	Specifications listed under Material Requisition, Drawings, and Mechanical Data Sheet listed above under References; ASME Boiler and Pressure Vessel Code, Section VIII, Division 1, Rules for Construction of Nuclear Power Plant Components, 1995; ASME Boiler and Pressure Vessel Code, Section VIII, Division 2, Alternative Rules; 24590-PTF-3YD-PWD-00001, Rev. 1, System Description for Plant Wash and Disposal System PWD and Radioactive Liquid Waste Disposal System PWD.	The Specification for Vessel Design and Fabrication requires the PWD system Plant Wash Vessel, PWD-VSL-00044 and all appurtenances to be designed to the ASME Section VIII, Division 1 rules which are appropriate for pressure vessels operating with mixed waste solutions over the pressure and temperature ranges specified for this vessel. Supplementary requirements are specified in the Engineering Specification for Pressure Vessel Design and Fabrication. Supplementary requirements address pressure vessel fatigue analysis, positive material identification, lifting attachment design, equipment drop evaluation, fabrication tolerances, acceptable welding procedures for the vessel and appurtenances, welder qualifications and testing records, NDE inspections and records, and lifting, packaging, shipping, handling and storage requirements. The vessels are subjected to cyclic loading. The Specification for Fatigue Analysis requires the use of ASME Section VIII, Division 2 rules for vessel components with a high number of load cycles. These are adequate and acceptable design standards for the intended use of the vessel. The vessel is vertical with a 276 in. ID and a height of 306 in. from bottom tangent line to top tangent line supported on a cylindrical skirt (3/4" thick plate x approx. 7'-9" high) which in turn is supported on a ring beam anchored to the concrete floor at Elev. 0'-0". The vessel's top and bottom heads are elliptical, built with 7/8" minimum thick plate. The shell is specified to be made of 1" thick plate. The vessel has internal equipment including eight pulse jet mixers, six charge vessels, and six reverse flow diverters/pumps supported from the top head. Material for the vessel's shell, heads, and internal equipment is SA-240 316 stainless steel (0.030% maximum carbon content, dual certified) and is hereafter referred to as 316. The supporting skirt is SA-240 304 stainless steel (0.030% maximum carbon content, dual certified) and is hereafter referred to as 304. The operating vessel volume is to be about 88,630 gallons and the total internal volume is to be about 103,000 gallons.

	Information Assessed	Source of Information	Assessment
Design	If a non-standard vessel is to be used, the design calculations demonstrate sound engineering principles of construction.	Specifications listed under Material Requisition, Drawings, and Mechanical Data Sheet listed above under References.	The PWD Plant Wash Vessel, PWD-VSL-00044 is a standard ASME Section VIII vessel. The Mechanical Data Sheet requires that the ASME Section VIII, Division 1 vessels be delivered after design, fabrication, inspection and testing with an ASME code stamp and that the vessels be nationally registered. Supplemental design information is provided by the reference documents listed in the Source of Information column for utilizing sound engineering principles of construction of the vessel.
	Vessel has adequate strength, after consideration of the corrosion allowance, to withstand the operating pressure, operating temperature, and seismic loads.	Specifications listed under Material Requisition, Drawings, and Mechanical Data Sheet listed above under References; 24590-PTF-3YD-PWD-00001, Rev. 1, System Description for Plant Wash and Disposal System PWD and Radioactive Liquid Waste Disposal System PWD.	The Mechanical Data Sheet identifies the vessels' operating pressure and temperature ranges, the materials selected for the vessel, the corrosion allowance, and the vessel quality level and seismic category which determine the requirements for seismic design. The design specification for the vessel requires specific consideration of the operating pressures and temperatures and seismic loads in the design process. ASME Section VIII, Division 1 requires that the corrosion allowance thickness be excluded from the nominal vessel thickness when evaluating the adequacy of vessel components for these loads at the end of life. The Engineering Specification for Seismic Qualification Criteria for Pressure Vessels adopts ASME Section VIII, Division 2 design rules to address seismic design and analysis of the vessel. Detailed requirements for seismic load determination are furnished in the specification for Seismic Category I/II Equipment and Tanks. These codes and standards are adequate and appropriate for the design of the PWD vessel to withstand operating pressure and temperature loads and seismic loads for the specified design life.

	Information Assessed	Source of Information	Assessment
Foundation	Vessel foundation will maintain the load of a full vessel.	Specifications listed under Material Requisition above under References; AISC Manual of Steel Construction, 9th Edition, American Institute of Steel Construction; 24590-WTP-DB-ENG-01-001, Rev. 1A, Basis of Design.	The Engineering Specification for Pressure Vessel Design and Fabrication requires the use of ASME BPV Code, Section VIII, Division 1 and AISC Manual of Steel Construction for the design of the vessel supports. This code ensures an adequate design for the vessel supports. Chapter 14 of the Basis of Design document requires that the vessel foundation design must be adequate to support the loads from full vessels.
	If in an area subject to flooding, the vessel is anchored.	Specifications listed under Material Requisition under References.	Buoyant forces on an empty vessel in a flooded room are mandatory standard design loads in the Specification for Pressure Vessel Design and Fabrication.
	Vessel system will withstand the effects of frost heave.	24590-WTP-DB-ENG-01-001, Rev. 1A, Basis of Design.	The Basis of Design document requires that all structural foundations for outdoor equipment to extend a distance below grade that exceeds the depth of the frost line. This vessel is located inside/interior of the building at (Elevation 0'-0" level), therefore, the vessel foundation is not subject to frost heave.

	Information Assessed	Source of Information	Assessment
Waste Characteristics	Characteristics of the waste to be stored or treated have been identified (ignitable, reactive, toxic, specific gravity, vapor pressure, flash point, storage temperature)	Mechanical Data Sheet listed above under References; Vessel/Tank Material Selection Data Sheet, 24590-PTF-N1D-PWD-P0001, Rev. 0, PWD-VSL-000044 (PTF) Plant Wash Vessel; 24590-WTP-PSAR-ESH-01-002-02, Rev. 1a, Preliminary Safety Analysis Report to Support Construction Authorization: PT Facility Specific Information; Department of Ecology Permit # WA7890008967, *Dangerous Waste Portion of the Hanford Facility Resource Conservation and Recovery Act Permit for the Treatment, Storage, and Disposal of Dangerous Waste,* Chapter 10, and Attachment 51, "Hanford Tank Waste Treatment and Immobilization Plant."	The Mechanical Data Sheet presents the waste specific gravity, storage temperatures and pressures. The Vessel/Tank Material Selection Data Sheet addresses the pH range and chemical composition of the waste to select appropriate vessel materials and specify the corrosion allowance. Other waste characteristics that are hazardous, such as ignitability, reactivity, and toxicity are addressed by the Preliminary Safety Analysis Report for the PTF Building and in Part A of the Permit as an integral part of the design process. The PWD vessel provides primary confinement of the waste during normal operations, abnormal operations, and during and after a Design Basis Earthquake. The vessel is provided with an air in-bleed to dilute any hydrogen generated in the vessel. The vessel also has eight pulse jet mixers to mitigate any such gas buildup in the waste. The vessels are actively vented via the PTF vent system to prevent any build-up of flammable gases. The vessel is grounded to control ignition sources.
	Vessel is designed to store or treat the wastes with the characteristics defined above and any treatment reagents.	Vessel/Tank Material Selection Data Sheet, 24590-PTF-N1D-PWD-P0001, Rev. 0, PWD-VSL-000044 (PTF) Plant Wash Vessel; 24590-PTF-3YD-PWD-00001, Rev. 1, System Description for Plant Wash and Disposal System PWD and Radioactive Liquid Waste Disposal System PWD.	The Vessel/Tank Material Selection Data Sheet demonstrates that the vessel is designed to process the wastes discussed above. The System Description discusses normal and abnormal operations for the PWD vessel. Excess acidic effluent is neutralized with 19M sodium hydroxide supplied from a reagent header. Acid and water will be used for flushing/rinsing.
	The waste types are compatible with each other.	24590-PTF-3YD-PWD-00001, Rev. 1, System Description for Plant Wash and Disposal System PWD and Radioactive Liquid Waste Disposal System PWD.	The System Description for the PTF PWD system does not describe any operations where incompatible wastes are mixed in these vessels for processing. The primary function of this vessel is to receive high-activity plant wash and recycles from numerous sources and components in PTF, LAW, HLW, and LAB facilities. The vessel is sized to receive washes from the largest potential wash and still be able to transfer waste from other sources. The neutralized effluent of this vessel is sent to the Waste Feed Evaporator Feed Vessels (FEP-VSL-00017A/B) for recycling.

	Information Assessed	Source of Information	Assessment
Corrosion Protection	Vessel material and protective coatings ensure the vessel structure is adequately protected from the corrosive effects of the waste stream and external environments (expected to not leak or fail for the design life of the system)	Drawings and Mechanical Data Sheet listed above under References; Vessel/Tank Material Selection Data Sheet, 24590-PTF-N1D-PWD-P0001, Rev. 0, PWD-VSL-000044 (PTF) Plant Wash Vessel; 24590-PTF-3YD-PWD-00001, Rev. 1, System Description for Plant Wash and Disposal System PWD and Radioactive Liquid Waste Disposal System PWD.	The Vessel/Tank Material Selection Data Sheet shows that the PWD Plant Wash Vessel, PWD-VSL-00044 normally operates at atmospheric pressure, pH 12, and at 115°F temperature. The vessel is designed for 15 psig pressure and 237 °F temperature. Potential acid and water cleaning operations of the vessel were also considered. The material selected is 316 and a corrosion allowance of 0.08 in. This vessel is located in cell (P-0104) at Elevation 0'-0". The cell is equipped with a sump to pump out any leaks. Therefore, the cell should remain dry during normal operations which will limit external corrosion of the vessel over the facility design life.
Corrosion Allowance	Corrosion allowance is adequate for the intended service life of the vessel.	Mechanical Data Sheet listed above under References; Vessel/Tank Material Selection Data Sheet, 24590-PTF-N1D-PWD-P0001, Rev. 0, PWD-VSL-000044 (PTF) Plant Wash Vessel;	The bases for the PWD vessel's material selection and corrosion allowance are furnished in the Vessel/Tank Material Selection Data Sheet. Selection of 316 materials with a corrosion allowance of 0.04 in. for a service life of 40 years is adequate and appropriate. The material selection and corrosion allowance of 0.08" (conservative) is carried forward to the Mechanical Data Sheet.
Pressure Relief	Pressure controls (vents and relief valves) are adequately designed to ensure pressure relief if normal operating pressures in the vessel are exceeded.	Drawings listed above under References; 24590-PTF-3YD-PWD-00001, Rev. 1, System Description for Plant wash and Disposal System PWD and Radioactive Liquid Waste Disposal System PWD.	The PWD Plant Wash Vessel, PWD-VSL-00044, is designed to overflow into the ultimate overflow vessel (PWD-VSL-00033) through an 8" diameter unrestricted line. Vessel (PWD-VSL-00033) is located in the PTF at Elevation (-) 45'-0", as shown on the drawings and described in the System Description document. This PWD vessel is also connected to the PTF vessel vent system to prevent over pressurization of the vessel.

Job No 24590

Bechtel National, Inc.

SUPPLIER DOCUMENT STATUS

1. [X] **Work may proceed.**
2. [ ] **Revise and resubmit. Work may proceed subject to resolution of indicated comments.**
3. [ ] **Revise and resubmit. Work may not proceed.**
4. [ ] **Review not required. Work may proceed.**

Permission to proceed does not constitute acceptance or approval of design details, calculations, analyses, test methods, or materials developed or selected by the supplier and does not relieve supplier from full compliance with contractual obligations.

REVIEWED										E+NS

G-321 Document Category N/A
[From Supplement A to G-321-E (E) or G-321-V (V), as applicable, or "N/A" if SSRS is used]

Supersedes BNI Document No. N/A Rev. _____
[When applicable]

Accepted by DC Pfluger (Print Name) DC Pfluger (Signature) 3/11/04 (Date)

Released by N/A (Print Name) _____ (Signature) _____ (Date)
[When applicable]

416 GP&S 7-03

24590-CM-HC4-HXYG-00138-02-00015
REV. 00A

SUBCONTRACT SUBMITTAL

Best Available Copy

R10270797

COGEMA-IA-039, Rev. 0

IQRPE REVIEW –
PRETREATMENT FACILITY (PTF), RADIOACTIVE LIQUID WASTE DISPOSAL SYSTEM (RLD) ALKALINE EFFLUENT VESSELS (RLD-VSL-00017A/B)

"I, Tarlok S. Hundal, have reviewed, and certified a portion of the design of a new tank system or component located at the Hanford Waste Treatment Plant, owned/operated by Department of Energy, Office of River Protection, Richland, Washington. My duties were independent review of the current design for the Pretreatment Facility (PTF), Radioactive Liquid Waste Disposal System (RLD) Alkaline Effluent Vessels (RLD-VSL-00017A/B) as required by the Dangerous Waste Regulations, namely, WAC 173-303-640(3) applicable paragraphs, i.e., (a) through (g)."

"I certify under penalty of law that I have personally examined and am familiar with the information submitted in this document and all attachments and that, based on my inquiry of those individuals immediately responsible for obtaining the information, I believe that the information is true, accurate, and complete.
I am aware that there are significant penalties for submitting false information, including the possibility of fine and imprisonment."

The documentation reviewed indicate that the design intent fully satisfies the requirements of the WAC.

The attached review is six (6) sheets numbered one (1) through six (6).

TARLOK SINGH HUNDAL
STATE OF WASHINGTON
20213
REGISTERED
PROFESSIONAL ENGINEER

EXPIRES: 02/15/06

Signature

3/9/04
Date

24590-CM-HC4-HXYG-00138-02-00015, REV. 00A

STRUCTURAL INTEGRITY ASSESSMENT OF THE PRETREATMENT FACILITY (PTF), RADIOACTIVE LIQUID WASTE DISPOSAL SYSTEM (RLD) ALKALINE EFFLUENT VESSELS (RLD-VSL-00017A/B)

COGEMA-IA-039
REV. 0

Please note that source, special nuclear and byproduct materials, as defined in the Atomic Energy Act of 1954 (AEA), are regulated at the U.S. Department of Energy (DOE) facilities exclusively by DOE acting pursuant to its AEA authority. DOE asserts, that pursuant to the AEA, it has sole and exclusive responsibility and authority to regulate source, special nuclear, and byproduct materials at DOE-owned nuclear facilities. Information contained herein on radionuclides is provided for process description purposes only.

Scope	Scope of this Integrity Assessment	This integrity assessment includes two RLD Alkaline Effluent Vessels: RLD-VSL-00017A/B, located in cell (P-0118) at Elevation 0'-0" in the Pretreatment Facility.
References	Specifications, Drawings and Mechanical Data Sheets	The following Specifications are listed in Material Requisition No. 24590-CM-MRB-MVA0-00001, Rev. 1 Engineering Specification for Pressure Vessel Design and Fabrication; Engineering Specification for Seismic Qualification Criteria for Pressure Vessels; Specification for Welding of Pressure Vessels, Heat Exchangers and Boilers; General Specification for Supplier Quality Assurance Program Requirements; Specification for Positive Material Identification (PMI); General Specification for Packing, Shipping, Handling, and Storage; Engineering Specification for Pressure Vessel Fatigue Analysis; Engineering Specification for Seismic Qualification Criteria for Pressure Vessels; Engineering Specification for Structural Design Loads for Seismic Category III and IV Equipment and Tanks. Drawings: 24590-PTF-MV-RLD-00001, Rev. 0, Equipment Assembly Alkaline Effluent Vessel, (RLD-VSL-00017A); 24590-PTF-MV-RLD-00002, Rev. 0, Equipment Assembly Alkaline Effluent Vessel, (RLD-VSL-00017B); 24590-PTF-P1-P01T-P0001, Rev. 2, Pretreatment Facility General Arrangement Plan at El. 0'-0"; 24590-PTF-P1-P01T-P0010, Rev. 3, Pretreatment Facility General Arrangement Section D-D; 24590-PTF-P1-P01T-P0011, Rev. 4, Pretreatment Facility General Arrangement Section E-E; 24590-PTF-M5-V17T-P0022003, Rev. 0, Process Flow Diagram Pretreatment Facility. Mechanical Data Sheets: 24590-PTF-MVD-RLD-00005, Rev.0, Mechanical Data Sheet for Alkaline Effluent Vessel (RLD-VSL-00017A); 24590-PTF-MVD-RLD-00006, Rev.0, Mechanical Data Sheet for Alkaline Effluent Vessel (RLD-VSL-00017B).
Summary of Assessment		For each item of "Information Assessed" (i.e., Criteria) on the following pages, the items listed under "Source of Information" were reviewed and found to furnish adequate design controls and requirements to ensure the design intent fully satisfies the requirements of Washington Administrative Code, WAC-173-303-640, *Dangerous Waste Regulations* for Tank Systems.

	Information Assessed	Source of Information	Assessment
Design	Vessel design standards are appropriate and adequate for the vessel's intended use.	Specifications listed under Material Requisition, Drawings, and Mechanical Data Sheet listed above under References; 24590-PTF-3YD-PWD-00001, Rev. 1, System Description for Plant Wash and Disposal System PWD and Radioactive Liquid Waste Disposal System RLD.	The RLD system Alkaline Effluent Vessels, RLD-VSL-00017A/B vessel and all appurtenances are to be designed to the ASME Section VIII, Division 1 rules which are appropriate for pressure vessels operating with mixed waste solutions over the pressure and temperature ranges specified for this vessel. Supplementary requirements are specified in the Engineering Specification for Pressure Vessel Design and Fabrication. Supplementary requirements address pressure vessel fatigue analysis, positive material identification, lifting attachment design, equipment drop evaluation, fabrication tolerances, acceptable welding procedures for the vessel and appurtenances, welder qualifications and testing records, NDE inspections and records, and lifting, packaging, shipping, handling and storage requirements. The vessels are subjected to cyclic loading. The fatigue design standards, ASME Section VIII, Division 2, are appropriate for components with high number of load cycles. These are adequate and acceptable design standards. The vessels are vertical vessels with a 192 in. ID and a height of 210 in. from bottom tangent line to top tangent line supported on a cylindrical skirt (1" thick by approx. 6'-0" high plate) which in turn is supported on a base beam ring anchored to the concrete floor at Elev. 0'-0". The vessels' top and bottom heads are semi-elliptical, built with 1" minimum thick plate. The shell is also specified to be made of 1" thick plate. The vessel has an internal jet mixer supported from bottom head and a dip pipe supported from the tank top. Material for the shell, vessel heads, vessel's internal equipment, and supporting skirt is SA-240 304 stainless steel (0.030% maximum carbon content, dual certified), will hereafter be referred to as 304. The operating vessel volume is to be about 28,110 gallons and the total internal volume is to be about 34,340 gallons.

	Information Assessed	Source of Information	Assessment
Design	If a non-standard vessel is to be used, the design calculations demonstrate sound engineering principles of construction.	Specifications listed under Material Requisition, Drawings, and Mechanical Data Sheets listed above under References;	The RLD Alkaline Effluent Vessels, RLD-VSL-00017A/B are standard ASME Section VIII vessels. The Mechanical Data Sheets require that the ASME Section VIII, Division 1 vessels be delivered after design, fabrication, inspection and testing with an ASME code stamp and that the vessels be nationally registered. Supplemental design information is provided by the reference documents listed in the Source of Information column for utilizing sound engineering principles of construction of the vessels. As discussed above, the vessel design standards are appropriate and adequate for the vessel's intended use.
	Vessel has adequate strength, after consideration of the corrosion allowance, to withstand the operating pressure, operating temperature, and seismic loads.	Specifications listed under Material Requisition, Drawings, and Mechanical Data Sheets listed above under References; 24590-PTF-3YD-PWD-00001, Rev. 1, System Description for Plant Wash and Disposal System PWD and Radioactive Liquid Waste Disposal System RLD.	The Mechanical Data Sheets identify the vessels' operating pressure and temperature ranges, the materials selected for the vessel, the corrosion allowance, and the vessel quality level which determines the requirements for seismic design. The design specifications for the vessels require specific consideration of the operating pressures and temperatures and seismic loads in the design process. ASME Section VIII, Div. 1 requires that corrosion allowance thickness shall be excluded from nominal vessel thickness when evaluating the adequacy of vessel components for these loads at end of life. The Engineering Specification for Seismic Qualification Criteria for Pressure Vessels adopts ASME Section VIII, Div. 2 design rules to address seismic design and analysis of the vessel and vessel supports. Detailed requirements for seismic load determination are furnished in the specification for Seismic Category III/IV Equipment and Tanks. These codes and standards are adequate and appropriate for design of the RLD vessels to withstand operating pressure and temperature loads and seismic loads for the specified design life.

	Information Assessed	Source of Information	Assessment
Foundation	Vessel foundation will maintain the load of a full vessel.	Specifications listed under Material Requisition above under References; 24590-WTP-DB-ENG-01-001, Rev. 1A, Basis of Design.	The Engineering Specification for Pressure Vessel Design and Fabrication requires the use of ASME B&PV Code, Section VIII, Division 1 for design of the vessel supports. This code ensures an adequate design for the vessel supports. Chapter 14 of the Basis of Design document requires that vessel foundations design must be adequate to support the loads from full vessels.
	If in an area subject to flooding, the vessel is anchored.	Specifications listed under Material Requisition under References.	Buoyant forces of an empty vessel in a flooded room are a mandatory standard design load case in the Specification for Pressure Vessel Design and Fabrication.
	Vessel system will withstand the effects of frost heave.	24590-WTP-DB-ENG-01-001, Rev. 1A, Basis of Design.	The Basis of Design document requires that all structural foundations for outdoor equipment to extend a distance below grade that exceeds the 30" depth of the frost line. These vessels are located inside/interior of the building at (Elevation 0'-0" level with 8 ft thick foundation mat), therefore, the vessel foundation is not subject to frost heave.

	Information Assessed	Source of Information	Assessment
Waste Characteristics	Characteristics of the waste to be stored or treated have been identified (ignitable, reactive, toxic, specific gravity, vapor pressure, flash point, storage temperature)	Mechanical Data Sheets listed above under References; Vessel/Tank Material Selection Data Sheet, 24590-PTF-N1D-RLD-P0002, Rev. 0, RLD-VSL-000017A/B (PTF) Alkaline Effluent Vessels; 24590-WTP-PSAR-ESH-01-002-02, Rev. 1a, Preliminary Safety Analysis Report: PT Facility Specific Information; Department of Ecology Permit # WA7890008967, *Dangerous Waste Portion of the Hanford Facility Resource Conservation and Recovery Act Permit for the Treatment, Storage, and Disposal of Dangerous Waste,* Chapter 10, and Attachment 51, "Hanford Tank Waste Treatment and Immobilization Plant."	The Mechanical Data Sheets present the waste specific gravity, storage temperatures and pressures. The Vessel/Tank Material Selection Data Sheet addresses the pH range and chemical composition of the waste to select appropriate vessel materials and specify the corrosion allowance. Other waste characteristics that are hazardous, such as ignitability, reactivity, and toxicity are addressed by the Preliminary Safety Analysis Report for the PTF Building and in Part A of the Permit as an integral part of the design process. The RLD vessels provide primary confinement of the waste during normal operations, abnormal operations and during and after a Design Basis Earthquake. Each vessel is provided with an air in-bleed to dilute any hydrogen generated in the vessel. Each vessel also has an operating jet mixer to mitigate any such gas buildup in the waste. The vessels are actively vented via PTF vent system to prevent any build-up of flammable gases. The vessel is grounded to control ignition sources.
	Vessel is designed to store or treat the wastes with the characteristics defined above and any treatment reagents.	Vessel/Tank Material Selection Data Sheet, 24590-PTF-N1D-RLD-P0002, Rev. 0, RLD-VSL-000017A/B (PTF) Alkaline Effluent Vessels; 24590-PTF-3YD-PWD-00001, Rev. 1, System Description for Plant Wash and Disposal System PWD and Radioactive Liquid Waste Disposal System RLD.	The Vessel/Tank Material Selection Data Sheet demonstrates that the vessel is designed to process the wastes discussed above. The System Description discusses normal and abnormal operations for the RLD vessels. Acid or water will be used for flushing/rinsing.
	The waste types are compatible with each other.	24590-PTF-3YD-PWD-00001, Rev. 1, System Description for Plant Wash and Disposal System PWD and Radioactive Liquid Waste Disposal System RLD.	The System Description for the PTF (RLD) does not describe any operations where incompatible wastes are mixed in these vessels for processing. The primary function of these vessels is to receive, store, and discharge low activity alkaline and other suspect active effluent generated within the PT and receive caustic scrub solution from LAW Vitrification Plant. These vessels' effluent is sent to Pretreatment Facility's process condensate tanks (RLD-TK-00006A/B) for further processing.

	Information Assessed	Source of Information	Assessment
Corrosion Protection	Vessel material and protective coatings ensure the vessel structure is adequately protected from the corrosive effects of the waste stream and external environments (expected to not leak or fail for the design life of the system)	Drawings and Mechanical Data Sheets listed above under References; Vessel/Tank Material Selection Data Sheet, 24590-PTF-N1D-RLD-P0002, Rev. 0, RLD-VSL-000017A/B (PTF) Alkaline Effluent Vessels; 24590-PTF-3YD-PWD-00001, Rev. 1, System Description for Plant Wash and Disposal System PWD and Radioactive Liquid Waste Disposal System RLD.	The Vessel/Tank Material Selection Data Sheet shows that the RLD Alkaline Effluent Vessels, RLD-VSL-00017A/B normally operate at atmospheric pressure, pH 13, and at 75 °F temperature. The vessels are designed for 15 psig pressure and a temperature of 150 °F. Other pertinent vessel operation and design information is provided in the Mechanical Data Sheets. Potential acid cleaning operations of the vessel were also considered. The material selected is 304 and a corrosion allowance of 0.08 in. The RLD vessels are located in the PTF cell (P-0118) at elevation 0'-0". This cell is equipped with a sump to pump out any leaks. Therefore, the cell should remain dry during normal operations which will limit external corrosion of the vessel over the facility design life.
Corrosion Allowance	Corrosion allowance is adequate for the intended service life of the vessel.	Mechanical Data Sheets listed above under References; Vessel/Tank Material Selection Data Sheet, 24590-PTF-N1D-RLD-P0002, Rev. 0, RLD-VSL-000017A/B (PTF) Alkaline Effluent Vessels;	The bases for the RLD vessels' material selection and corrosion allowance are furnished in the Vessel/Tank Material Selection Data Sheet. Selection of 304 materials with a corrosion allowance of 0.08 in. for a service life of 40 years is adequate and appropriate. The material selection and corrosion allowance are carried forward to the Mechanical Data Sheets consistently and correctly.
Pressure Relief	Pressure controls (vents and relief valves) are adequately designed to ensure pressure relief if normal operating pressures in the vessel are exceeded.	Drawings listed above under References; 24590-PTF-3YD-PWD-00001, Rev. 1, System Description for Plant Wash and Disposal System PWD and Radioactive Liquid Waste Disposal System RLD.	The RLD Alkaline Effluent Vessels, RLD-VSL-00017A/B are designed to overflow into each other but ultimately overflow to the ultimate overflow vessel (PWD-VSL-00033) through an 8" diameter unrestricted line. Vessel (PWD-VSL-00033) is located at Elevation (-) 45'-0" of the PTF, as shown on the drawings and described in the System Description document. The RLD vessels are also connected to the PTF vessel vent system to prevent over pressurization of the vessel.

Job No. 24590

Bechtel National, Inc.

SUPPLIER DOCUMENT STATUS

1. [X] **Work may proceed.**
2. [ ] **Revise and resubmit. Work may proceed subject to resolution of indicated comments.**
3. [ ] **Revise and resubmit. Work may not proceed.**
4. [ ] **Review not required. Work may proceed.**

Permission to proceed does not constitute acceptance or approval of design details, calculations, analyses, test methods, or materials developed or selected by the supplier and does not relieve supplier from full compliance with contractual obligations.

REVIEWED										EWS

G-321 Document Category N/A
[From Supplement A to G-321-E (E) or G-321-V (V), as applicable, or "N/A" if SSRS is used]

Supersedes BNI Document No. N/A Rev. _____
[When applicable]

Accepted by DCPflager (Print Name) [signature] (Signature) 3/11/04 (Date)

Released by N/A (Print Name) _____ (Signature) _____ (Date)
[When applicable]

416 GP&S 7-03

24590-CM-HC4-HXYG-00138-02-00017
REV. 00A

SUBCONTRACT SUBMITTAL

Best Available Copy

R10270979

IQRPE REVIEW – PRETREATMENT FACILITY ELEVATION 0'-0" RADIOACTIVE LIQUID WASTE DISPOSAL SYSTEM (RLD) ANCILLARY EQUIPMENT

"I, John T. Baxter, have reviewed, and certified a portion of the design of a new tank system or component located at the Hanford Waste Treatment Plant, owned/operated by Department of Energy, Office of River Protection, Richland, Washington. My duties were independent review of the current design for the Pretreatment Facility Elevation 0'-0" Radioactive Liquid Waste Disposal System (RLD) Ancillary Equipment as required by the Dangerous Waste Regulations, namely, WAC 173-303-640(3) applicable paragraphs, i.e., (a) through (g)."

"I certify under penalty of law that I have personally examined and am familiar with the information submitted in this document and all attachments and that, based on my inquiry of those individuals immediately responsible for obtaining the information, I believe that the information is true, accurate, and complete. I am aware that there are significant penalties for submitting false information, including the possibility of fine and imprisonment."

The documentation reviewed indicate that the design intent fully satisfies the requirements of the WAC.

The attached review is nine (9) sheets numbered one (1) through nine (9).

JOHN T. BAXTER
STATE OF WASHINGTON
18978
REGISTERED
PROFESSIONAL ENGINEER
EXPIRES: 10/28/04

John T. Baxter
Signature

03/11/2004
Date

KS 3/11/04

24590-CM-HC4-HXYG-~~000~~
-00138-02-00017, REV. 00A

STRUCTURAL INTEGRITY ASSESSMENT OF THE PRETREATMENT FACILITY ELEVATION 0'-0" RADIOACTIVE LIQUID WASTE DISPOSAL SYSTEM (RLD) ANCILLARY EQUIPMENT

COGEMA-IA-038
REV. 0

Please note that source, special nuclear and byproduct materials, as defined in the Atomic Energy Act of 1954 (AEA), are regulated at the U.S. Department of Energy (DOE) facilities exclusively by DOE acting pursuant to its AEA authority. DOE asserts, that pursuant to the AEA, it has sole and exclusive responsibility and authority to regulate source, special nuclear, and byproduct materials at DOE-owned nuclear facilities. Information contained herein on radionuclides is provided for process description purposes only.

Scope	Scope of this Integrity Assessment	This Integrity Assessment addresses ancillary equipment for the Pretreatment Facility (PTF) Radioactive Liquid Waste Disposal System RLD. This includes: a. Two Process Condensate Tanks (RLD-TK-00006A/B) located north of the PTF in a secondary containment basin 2 ft. below grade. The ancillary equipment associated with these tanks is shown on P&ID drawings 24590-PTF-M6-RLD-P0001 and –P0002. b. Two Alkaline Effluent Vessels (RLD-VSL-00017A/B) are located inside the PTF in Room P-0118 which is a R2/C3 area. The ancillary equipment associated with these tanks is shown on P&ID drawing 24590-PTF-M6-RLD-P0003. c. Ancillary equipment for the RLD System Process Condensate Distribution Lines is shown on P&ID drawing 24590-PTF-M6-RLD-P0004; d. Ancillary equipment for the Wash Racks for tanks RLD-VSL-00017A/B are shown on P&ID drawing 24590-PTF-M6-RLD-P0006. Ancillary equipment located inside the RLD system tanks and vessels is addressed separately in the Integrity Assessments for these components. Direct buried double containment transfer lines located outside the Pretreatment Facility are outside the scope of this Integrity Assessment.

References	Drawings and System Description	24590-PTF-P1-P01T-P0001, Rev. 2, Pretreatment Facility General Arrangement Plan at Elev. 0'-0"; 24590-PTF-P1-P01T-P0013, Rev. 3, Pretreatment Facility General Arrangement Sect. H-H and Sect. J-J; 24590-PTF-M5-V17T-P0022003, Rev. 0, Process Flow Diagram Pretreatment Radioactive Liquid Disposal (RLD) Systems PWD/RLD; 24590-PTF-M5-V17T-P0022004, Rev. 0, Process Flow Diagram Pretreatment Radioactive Liquid Disposal/Recycle System (RLD); 24590-PTF-M6-RLD-P0001, Rev. 0, P&ID – PTF Radioactive Liquid Waste Disposal System Process Condensate RLD-TK-00006A/B (Q); 24590-PTF-M6-RLD-P0002, Rev. 0, P&ID – PTF Radioactive Liquid Waste Disposal System Process Condensate RLD-PMP-00011A/B, 12A/B & 14A/B; 24590-PTF-M6-RLD-P0003, Rev. 0, P&ID – PTF Radioactive Liquid Waste Disposal System Effluent Collection RLD-VSL-00017A/B & RLD-PMP-00005A/B (Q); 24590-PTF-M6-RLD-P0004, Rev. 0, P&ID – PTF Radioactive Liquid Waste Disposal System Process Condensate Distribution; 24590-PTF-M6-RLD-P0006, Rev. 0, P&ID – PTF Radioactive Liquid Waste Disposal System Plant Wash; 24590-PTF-3YD-PWD-00001, Rev. 1, System Description for Plant Wash and Disposal System PWD and Radioactive Liquid Waste Disposal System RLD

Summary of Assessment

For each item of "Information Assessed" (i.e., Criteria) on the following pages, the items listed under "Source of Information" were reviewed and found to furnish adequate design controls and requirements to assure the design intent fully satisfies the WAC requirements.

	Information Assessed	Source of Information	Discussion
Design	Ancillary equipment design standards are appropriate and adequate for the equipment's intended use.	Drawings listed above under References; 24590-WTP-DC-PS-01-001, Rev 2, Pipe Stress Design Criteria including "Pipe Stress Criteria" and "Span Method Criteria"; ASME B31.3 Code, Process Piping, 1996 Edition, American Society of Mechanical Engineers; 24590-WTP-PSAR-ESH-01-002-02, Rev. 1a, Preliminary Safety Analysis Report (PSAR) to Support Construction Authorization, PT Facility Specific Information	The Pipe Stress Design Criteria identifies ASME B31.3 as the design code for piping systems of the WTP. The P&ID drawings show the ancillary equipment piping and components as Seismic Category (SC-III) and Quality Level (Non-Quality Related). The Pipe Stress Design Criteria document provides a detailed discussion of seismic categories. Quality Levels are discussed in the PSAR. These codes and standards are acceptable and adequate for the design of the ancillary piping for the intended service.
	If the ancillary equipment to be used is not built to a design standard, the design calculations demonstrate sound engineering principles of construction.	24590-WTP-DC-PS-01-001, Rev 2, Pipe Stress Design Criteria including "Pipe Stress Criteria" and "Span Method Criteria"	The ancillary equipment is built to design standards. The Pipe Stress Design Criteria specifies that piping is to be designed in accordance with ASME B31.3.

	Information Assessed	Source of Information	Discussion
Design	Ancillary equipment has adequate strength at the end of its design life to withstand the operating pressure, operating temperature, thermal expansion, and seismic loads. Equipment is protected against physical damage and excessive stress due to settlement, vibration, expansion, or contraction.	24590-WTP-DC-PS-01-001, Rev 2, Pipe Stress Design Criteria including "Pipe Stress Criteria" and "Span Method Criteria"; 24590-WTP-PER-M-02-002, Rev 0, Materials for Ancillary Equipment; Uniform Building Code (UBC), International Conference of Building Officials, 1997; ASME Boiler and Pressure Vessel Code, Section III, Division 1, Rules for Construction of Nuclear Facility Components, 1995; 24590-WTP-VV-PS-01-001, Rev. 1, Verification and Validation Report for ME101, Linear Elastic Analysis of Piping, Version N6	The Pipe Stress Design Criteria requires the use of the ASME B31.3 Code for piping design. ASME B31.3 requires explicit consideration of operating pressure, operating temperature, thermal expansion/contraction, settlement, vibration, and corrosion allowance in the design of piping. The Materials for Ancillary Equipment document requires that the material selection and corrosion/erosion allowances for ancillary equipment in contact with the waste will be equal to or better than the material and corrosion allowance of the waste source vessel. ASME III, Division1, Subsection NC and Appendix F, and the Uniform Building Code (UBC) are used to supplement the requirements of ASME B31.3 for seismic design of Seismic Category (SC-III/SC-IV) ancillary equipment. Details of the seismic design methods are discussed in the Pipe Stress Design Criteria document. Computer codes used for piping design and stress analysis have been tested and approved as discussed in the Verification and Validation Report for ME101, Linear Elastic Analysis of Piping, Version N6. These are adequate and appropriate codes and standards to assure that the ancillary equipment has adequate strength at the end of its design life to withstand all anticipated loads.

	Information Assessed	Source of Information	Discussion
Supports	Ancillary equipment supports are adequately designed.	24590-WTP-DC-PS-01-002, Rev 2, Pipe Support Design Criteria; ASME Boiler and Pressure Vessel Code, Section III, Division 1, Rules for Construction of Nuclear Power Plant Components, 1995; 24590-WTP-PER-PS-02-001, Rev. 4, Ancillary Equipment Pipe Support Design; 24590-WTP-PL-PS-01-001, Rev 1, Verification and Validation Test Plan for Bechtel's ME150 Pipe Support Family of Programs (PCFAPPS)	The Pipe Support Design Criteria document considers all loadings identified in ASME B31.3 and utilizes ASME B&PV Code, Section III, Division 1, Subsection NF and Appendix F, to supplement the requirements of ASME B31.3 for seismic design of Seismic Category (SC-III/IV) pipe supports. Bounding load cases are passed to the pipe support designers from the results of the ancillary equipment piping stress analyses. Analysis is by manual calculation or computer programs that have been tested and approved as discussed in the Verification and Validation Test Plan for Bechtel's ME150 Pipe Support Family of Programs (PCFAPPS). Details of the seismic design methodology are discussed in the Pipe Support Design Criteria document. Examples of typical ancillary equipment supports are shown in the Ancillary Equipment Pipe Support Design document. These are appropriate codes and standards for design of ancillary equipment supports for the RLD system. Ancillary equipment supports are to be designed to allow a minimum of heat to be transferred to the building structures (building structures not to exceed 150 deg F for concrete and 200 deg F for steel).
Connections	Seams and connections are adequately designed.	24590-WTP-DC-PS-01-001, Rev 2, Pipe Stress Design Criteria including "Pipe Stress Criteria" and "Span Method Criteria"	Ancillary equipment for the RLD system is located in R2/C3 areas and other accessible work areas. The Pipe Stress Design Criteria specifies the ASME B31.3 Process Piping design code for the piping systems. Welding is to be performed in accordance with the requirements of ASME B31.3 and the ASME B&PV Code, Section IX. ANSI B16.5 is specified for flange designs. These are appropriate codes and standards for design and fabrication of the RLD System ancillary equipment.

	Information Assessed	Source of Information	Discussion
Frost Heave	The system will withstand the effects of frost heave.	System Description listed above under References; 24590-WTP-DC-ST-01-001, Rev. 1, Structural Design Criteria	The RLD system effluent collection equipment considered in this assessment is located inside the PTF in process cells while the process condensate equipment is located outside the PTF in a secondary containment concrete basin on grade. The Structural Design Criteria requires that all structural foundations shall extend into the surrounding soil below the frost line to preclude frost heave. Both the PTF and the concrete basin are considered to be structural foundations. The frost line is 30 in. below grade. Therefore the ancillary equipment is not subject to the effects of frost heave. RLD system tanks and ancillary equipment that is located outside the PTF is equipped with insulation and is heat traced to preclude freezing the waste contents.
Waste Characteristics	Characteristics of the waste to be stored or treated have been identified (ignitable, reactive, toxic, specific gravity, vapor pressure, flash point, temperature)	24590-WTP-PSAR-ESH-01-002-02, Rev. 1a, Preliminary Safety Analysis Report to Support Construction Authorization; PT Facility Specific Information; System Description listed above under References	The RLD System Description states that the Alkaline Effluent Vessels (RLD-VSL-00017A/B) and the Process Condensate Tanks (RLD-TK-00006A/B) have no important to safety functions. The primary function of the RLD ancillary equipment is containment of the low activity caustic waste and evaporator condensates for either reuse in the PTF processes, or disposal to the Hanford Site LERF/ETF systems. The ancillary equipment considered in this assessment will handle wastes with the same characteristics as do the source vessels. The Preliminary Safety Analysis Report (PSAR) provides a summary of potential hazardous conditions associated with each Pretreatment Facility vessel and the design provisions that are to be used to provide adequate control of each hazard. Although the RLD vessels and tanks are not considered a hazardous source for hydrogen generation, the Pretreatment Vessel Vent Process System provides offgas control in the vessel/tank head spaces. Air in-bleed lines are provided for each vessel/tank for hydrogen dilution.

	Information Assessed	Source of Information	Discussion
Waste Char.	Ancillary equipment is designed to handle the wastes with the characteristics defined above and any treatment reagents.	24590-WTP-PER-M-02-002, Rev 0, Materials for Ancillary Equipment; System Description listed above under References	The Materials for Ancillary Equipment document specifies that ancillary equipment materials that contact the waste are to be equal to or better than those of the upstream source vessels. The System Description states that reagents are not added to the RLD vessels/tanks during normal operations. If waste is out of specification limits, it is transferred to another WTP process system for adjustment.
Compatibility	The pH range of the waste, waste temperature and the corrosion behavior of the structural materials are adequately addressed. Ancillary equipment material and protective coatings ensure the ancillary equipment structure is adequately protected from the corrosive effects of the waste stream and external environments. The protection is sufficient to ensure the equipment will not leak or fail for the design life of the system.	24590-WTP-DB-ENG-01-001, Rev. 1a, Basis of Design; 24590-WTP-PER-M-02-002, Rev 0, Materials for Ancillary Equipment; 24590-WTP-3PS-NN00-T0001, Rev 0, Engineering Specification for Hot and Anti-Sweat Thermal Insulation	The Basis of Design document identifies a service design life of 40 years for the ancillary equipment. Detailed materials selection (corrosion) evaluations are conducted for each vessel in the PTF facility during process design to assure a 40 year service life. The Materials for Ancillary Equipment document requires that the material selection and corrosion/erosion allowances for ancillary equipment in contact with the waste will be equal to or better than the material and corrosion allowance of the waste source vessel. The Thermal Insulation specification requires that all insulating materials used on the outside of ancillary equipment be pre-approved for use on austenitic stainless steel in accordance with applicable ASTM procedures and tests to preclude external corrosion of ancillary equipment. Therefore, the ancillary equipment will provide the expected design service life.

	Information Assessed	Source of Information	Discussion
Corrosion Allowance	Corrosion allowance is adequate for the intended service life of the ancillary equipment.	System Description listed above under References; 24590-WTP-PER-M-02-002, Rev 0, Materials for Ancillary Equipment; 24590-WTP-DC-PS-01-001, Rev 2, Pipe Stress Design Criteria including "Pipe Stress Criteria" and "Span Method Criteria"; 24590-WTP-PER-PL-02-001, Rev. 5, Piping Material Class Description	ASME B31.3 is the design code for the WTP piping. Consideration of corrosion, including corrosion allowance, is a mandatory requirement of ASME B31.3. A required service life of 40 years is identified in the Basis of Design for ancillary equipment. Detailed materials selection (corrosion) evaluations are conducted for each vessel in the PTF facility during process design to assure a 40 year service life. The Materials for Ancillary Equipment document requires that downstream ancillary equipment is to be constructed of equal or better materials, and with the same corrosion allowance as the source vessel. Corrosion/Erosion allowances are listed for each Piping Material Class in the Piping Material Class Description document.
Strength	Pressure controls (vents and relief valves) are adequately designed to ensure pressure relief if normal operating pressures in the vessels are exceeded.	24590-WTP-DC-PS-01-001, Rev 2, Pipe Stress Design Criteria including "Pipe Stress Criteria" and "Span Method Criteria"	The Pipe Stress Design Criteria document specifies ASME B31.3 as the design code for the WTP piping. ASME B31.3 requires provision be made to safely contain or relieve any pressure to which the piping may be subjected. ASME B31.3 piping not protected by a pressure relieving device, or that can be isolated from a pressure reliving device must be designed for at least the highest pressure that can be developed.
	Maximum flows and any unusual operating stresses are identified	Drawings listed above under References; 24590-WTP-DC-PS-01-001, Rev 2, Pipe Stress Design Criteria including "Pipe Stress Criteria" and "Span Method Criteria" 24590-WTP-PER-PL-02-001, Rev. 5, Piping Material Class Description	The expected flow paths for the ancillary equipment are identified on the P&ID drawings. The Pipe Stress Design Criteria specifies the ASME B31.3 code for piping design. This code requires piping to be designed to the highest pressure that can be developed in a piping system assuring that maximum operating stresses remain within code allowables. Piping material classes are shown on the P&IDs embedded in the item numbers for each ancillary equipment component. The Piping Material Class Description document lists the bounding pressure and temperature limits for each piping material class.

	Information Assessed	Source of Information	Discussion
Secondary Containment	Ancillary equipment is designed with secondary containment that is constructed of materials compatible with the waste and of sufficient strength to prevent failure (pressure gradients, waste, climatic conditions, daily operations), provided with a leak-detection system, and designed to drain and remove liquids.	Drawings and System Description listed above under References; 24590-WTP-DB-ENG-01-001, Rev 1a, Basis of Design	The ancillary equipment considered in this assessment is located in R2/C3 areas within the PTF and outside the PTF in a secondary containment concrete basin on grade. Secondary containment in the R2/C3 areas is provided by a concrete basin with special protective coatings and a sump (PWD-SUMP-00036) as shown on the general arrangement plan which is outside the scope of this integrity assessment. The secondary containment basin outside the PTF is provided with a sump (RLD-SUMP-00003) as shown on the P&ID drawing. This secondary containment basin is also outside the scope of this integrity assessment. All secondary containments will be provided with drains and leak detection systems for detection of primary containment leaks as discussed in the Basis of Design. Above grade transfer lines between the RLD equipment located in the secondary containment basin on grade and the equipment located inside the PTF, are not provided with secondary containment. These lines are fully welded without any valves or other ancillary equipment that might leak, and will be inspected daily for leakage in accordance with the requirements of the WAC.

Job No. 24590

Bechtel National, Inc.

SUPPLIER DOCUMENT STATUS

1. [X] **Work may proceed.**
2. [ ] **Revise and resubmit. Work may proceed subject to resolution of indicated comments.**
3. [ ] **Revise and resubmit. Work may not proceed.**
4. [ ] **Review not required. Work may proceed.**

Permission to proceed does not constitute acceptance or approval of design details, calculations, analyses, test methods, or materials developed or selected by the supplier and does not relieve supplier from full compliance with contractual obligations.

REVIEWED									

G-321 Document Category N/A
[From Supplement A to G-321-E (E) or G-321-V (V), as applicable, or "N/A" if SSRS is used]

Supersedes BNI Document No. N/A Rev. _____
[When applicable]

Accepted by D.C. Flugar (Print Name) (Signature) 3/23/04 (Date)

Released by N/A
[When applicable] Print Name Signature Date

416 GP&S 7-03

24590-CM-HC4-HXYG-00138-02-00019
REV. 00A

PURCHASE ORDER SUBMITTAL

Best Available Copy

R10273683

IQRPE REVIEW – PRETREATMENT FACILITY WASTE FEED EVAPORATION PROCESS (FEP) SYSTEM VESSELS AND MISCELLANEOUS TREATMENT UNITS ANCILLARY EQUIPMENT

"I, John T. Baxter, have reviewed, and certified a portion of the design of a new tank system or component located at the Hanford Waste Treatment Plant, owned/operated by Department of Energy, Office of River Protection, Richland, Washington. My duties were independent review of the current design for the Pretreatment Facility Waste Feed Evaporation Process (FEP) System Vessels and Miscellaneous Treatment Units Ancillary Equipment as required by the Dangerous Waste Regulations, namely, WAC 173-303-640(3) applicable paragraphs, i.e., (a) through (g)."

"I certify under penalty of law that I have personally examined and am familiar with the information submitted in this document and all attachments and that, based on my inquiry of those individuals immediately responsible for obtaining the information, I believe that the information is true, accurate, and complete. I am aware that there are significant penalties for submitting false information, including the possibility of fine and imprisonment."

The documentation reviewed indicates that the design intent fully satisfies the requirements of the WAC.

The attached review is eleven (11) sheets numbered one (1) through eleven (11).

JOHN T. BAXTER
STATE OF WASHINGTON
18978
REGISTERED
PROFESSIONAL ENGINEER

John Baxter 03/22/04

EXPIRES: 10/28/04

24590-CM-HXYG-00138-02-00019, REV. 00A

John T. Baxter — 03/22/04

Signature — Date

STRUCTURAL INTEGRITY ASSESSMENT OF THE PRETREATMENT FACILITY WASTE FEED EVAPORATION PROCESS (FEP) SYSTEM VESSELS AND MISCELLANEOUS TREATMENT UNITS ANCILLARY EQUIPMENT

COGEMA-IA-043
REV. 0

Please note that source, special nuclear and byproduct materials, as defined in the Atomic Energy Act of 1954 (AEA), are regulated at the U.S. Department of Energy (DOE) facilities exclusively by DOE acting pursuant to its AEA authority. DOE asserts, that pursuant to the AEA, it has sole and exclusive responsibility and authority to regulate source, special nuclear, and byproduct materials at DOE-owned nuclear facilities. Information contained herein on radionuclides is provided for process description purposes only.

Scope	Scope of this Integrity Assessment	This integrity assessment includes ancillary equipment associated with the vessels and miscellaneous treatment units that comprise the Waste Feed Evaporation Process (FEP) system as shown on the drawings listed below.
References	Drawings, System Description, Engineering Specification and Specification Change Notice	24590-PTF-M5-V17T-P0004001, Rev. 0, Process Flow Diagram Waste Feed Evaporation Sheet 1 of 2 System FEP; 24590-PTF-M5-V17T-P0004002, Rev. 0, Process Flow Diagram Waste Feed Evaporation Sheet 2 of 2 System FEP; 24590-PTF-M6-FEP-P0001, Rev. 0, P&ID – PTF Waste Feed Evaporation Process System Evaporator Feed Vessels FEP-VSL-00017A/B; 24590-PTF-M6-FEP-P0002, Rev. 0, P&ID – PTF Waste Feed Evaporation Process System Separator FEP-SEP-00001A; 24590-PTF-M6-FEP-P0003, Rev. 0, P&ID – PTF Waste Feed Evaporation Process System Condensers & Condensate Collection FEP-VSL-00005; 24590-PTF-M6-FEP-P0004, Rev. 0, P&ID – PTF Waste Feed Evaporation Process System Separator FEP-SEP-00001B; 24590-PTF-M6-FEP-P0005, Rev. 0, P&ID – PTF Waste Feed Evaporation Process System Condensers; 24590-PTF-M6-FEP-P0006, Rev. 0, P&ID – PTF Waste Feed Evaporation Utility Services PSA Rack (Q); 24590-PTF-M6-FEP-P0007, Rev. 0, P&ID – PTF Waste Feed Evaporation Utility Services PSA Rack (Q); 24590-PTF-M6-FEP-P0008, Rev. 0, P&ID – PTF Waste Feed Evaporation Utility Services Plant Wash Rack; 24590-PTF-3YD-FEP-00001, Rev. 0, System Description for Waste Feed Evaporation Process (FEP); System Description Change Notice (SDCN) No. 24590-PTF-3YN-FEP-00001 for 24590-PTF-3YD-FEP-00001, Rev. 0, System Description for Waste Feed Evaporation Process (FEP); 24590-PTF-WTP-3PS-MEVV-T0001, Rev. 0, Engineering Specification for Forced Circulation Vacuum Evaporator System; Specification Change Notice (SCN) No. 24590-PTF-3PN-MEVV-00001 to Specification No. 24590-PTF-3PS-MEVV-T0001, Rev. 0, Engineering Specification for Forced Circulation Vacuum Evaporator System

References	Mechanical Data Sheets and Plant Item Material Selection Data Sheets	Material Requisition No. 24590-QL-MRA-MEVV-00001, Rev. 2, MR Section 2 – Technical Specifications (Rev. 0, May 2002), Evaporators (Forced Recirculation) QL-1, including Supplement S01; Mechanical Data Sheet Shell and Tube Heat Exchanger, 24590-PTF-MED-FEP-00003, Rev. 0, Waste Feed Evaporator Primary Condenser FEP-COND-00001A; Mechanical Data Sheet Shell and Tube Heat Exchanger, 24590-PTF-MED-FEP-00004, Rev. 0, Waste Feed Evaporator Primary Condenser FEP-COND-00001B; Mechanical Data Sheet Shell and Tube Heat Exchanger, 24590-PTF-MED-FEP-00005, Rev. 0, Waste Feed Evaporator Inter-Condenser FEP-COND-00002A; Mechanical Data Sheet Shell and Tube Heat Exchanger, 24590-PTF-MED-FEP-00006, Rev. 0, Waste Feed Evaporator Inter-Condenser FEP-COND-00002B; Mechanical Data Sheet Shell and Tube Heat Exchanger, 24590-PTF-MED-FEP-00007, Rev. 0, Waste Feed Evaporator After-Condenser FEP-COND-00003A; Mechanical Data Sheet Shell and Tube Heat Exchanger, 24590-PTF-MED-FEP-00008, Rev. 0, Waste Feed Evaporator After-Condenser FEP-COND-00003B; Plant Item Material Selection Data Sheet, 24590-PTF-N1D-FEP-P0013, Rev. 0, Waste Feed Evaporator Primary Condenser FEP-COND-00001A/B (PTF); Plant Item Material Selection Data Sheet, 24590-PTF-N1D-FEP-P0009, Rev. 0, Waste Feed Evaporator Intercondensers FEP-COND-00002A/B (PTF); Plant Item Material Selection Data Sheet, 24590-PTF-N1D-FEP-P0010, Rev. 0, Waste Feed Evaporator Aftercondensers FEP-COND-00003A/B (PTF)

Summary of Assessment

For each item of "Information Assessed" (i.e., Criteria) on the following pages, the items listed under "Source of Information" were reviewed and found to furnish adequate design controls and requirements to assure the design intent fully satisfies the WAC requirements.

	Information Assessed	Source of Information	Discussion
Design	Ancillary equipment design standards are appropriate and adequate for the equipment's intended use.	Material Requisition and Mechanical Data Sheets listed above under References; 24590-WTP-DC-PS-01-001, Rev 2, Pipe Stress Design Criteria including "Pipe Stress Criteria" and "Span Method Criteria"; Drawings listed above under References; ASME B31.3 Code, Process Piping, 1996 Edition, American Society of Mechanical Engineers; 24590-WTP-3PS-MV00-T0001, Rev. 1, Engineering Specification for Pressure Vessel Design and Fabrication; 24590-WTP-3PS-MES0-T0001, Rev. 0, Engineering Specification for Shell and Tube Heat Exchangers; ASME Boiler and Pressure Vessel (B&PV) Code, Section VIII, Division 1, Rules for Construction of Pressure Vessels, American Society of Mechanical Engineers; 24590-WTP-PSAR-ESH-01-002-02, Rev. 1a, Preliminary Safety Analysis Report (PSAR) to Support Construction Authorization; PT Facility Specific Information	The Pipe Stress Design Criteria document identifies ASME B31.3 as the design code for piping systems of the WTP. The P&ID drawings show there is a range of Quality Levels and Seismic Categories for the ancillary equipment. Ancillary equipment shown on the P&ID drawing for the Evaporator Feed Vessels is to be designed and fabricated to Quality Level (QL-1) and Seismic Category (SC-1) requirements. The Material Requisition and Mechanical Data Sheets indicate that the FEP System condensers are to be designed and fabricated to Quality Level (QL-1) and Seismic Category (SC-I) requirements. They are to be designed and fabricated in accordance with the requirements of the ASME B&PV Code, Section VIII, Division 1 as specified in the Engineering Specification for Pressure Vessel Design and Fabrication supplemented by the requirements in the Engineering Specification for Shell and Tube Heat Exchangers. Ancillary equipment shown on the P&ID for the Plant Wash Rack is to be designed and fabricated to Quality Level (CM) (Commercial Grade) and Seismic Category (SC-III) requirements. Requirements associated with Quality Levels are explained in the PSAR. Requirements associated with the different Seismic Categories are discussed in detail in the Pipe Stress Design Criteria document. These codes and standards are acceptable and adequate for the design of the FEP system ancillary equipment for the intended service.

	Information Assessed	Source of Information	Discussion
Design	If the ancillary equipment to be used is not built to a design standard, the design calculations demonstrate sound engineering principles of construction.	Material Requisition and Mechanical Data Sheets listed above under References; 24590-WTP-DC-PS-01-001, Rev 2, Pipe Stress Design Criteria including "Pipe Stress Criteria" and "Span Method Criteria"; ASME B31.3 Code, Process Piping, 1996 Edition, American Society of Mechanical Engineers; 24590-WTP-3PS-MV00-T0001, Rev. 1, Engineering Specification for Pressure Vessel Design and Fabrication; 24590-WTP-3PS-MES0-T0001, Rev. 0, Engineering Specification for Shell and Tube Heat Exchangers; ASME Boiler and Pressure Vessel (B&PV) Code, Section VIII, Division 1, Rules for Construction of Pressure Vessels, American Society of Mechanical Engineers	The ancillary equipment is built to design standards. The Pipe Stress Design Criteria document specifies that the ancillary equipment will be designed in accordance with ASME B31.3. The Material Requisition and Mechanical Data Sheets indicate that the FEP System condensers are to be designed and fabricated in accordance with the requirements of the ASME B&PV Code, Section VIII, Division 1 as specified in the Engineering Specification for Pressure Vessel Design and Fabrication supplemented by the requirements in the Engineering Specification for Shell and Tube Heat Exchangers.

	Information Assessed	Source of Information	Discussion
Design	Ancillary equipment has adequate strength at the end of its design life to withstand the operating pressure, operating temperature, thermal expansion, and seismic loads. Equipment is protected against physical damage and excessive stress due to settlement, vibration, expansion, or contraction.	24590-WTP-DB-ENG-01-001, Rev 1A, Basis of Design; 24590-WTP-PER-M-02-002, Rev 0, Materials for Ancillary Equipment; 24590-WTP-DC-PS-01-001, Rev 2, Pipe Stress Design Criteria including "Pipe Stress Criteria" and "Span Method Criteria"; ASME B31.3 Code, Process Piping, 1996 Edition, American Society of Mechanical Engineers; ASME Boiler and Pressure Vessel (B&PV) Code, Section III, Rules for Construction of Nuclear Facility Components, Division 1, Subsection NC, Appendix N and Appendix F, 1995; Uniform Building Code (UBC), 1997 Edition, International Conference of Building Officials; 24590-WTP-3PS-MV00-T0001, Rev. 1, Engineering Specification for Pressure Vessel Design and Fabrication; 24590-WTP-3PS-MV00-T0002, Rev. 1, Engineering Specification for Seismic Qualification Criteria for Pressure Vessels; 24590-WTP-3PI-SS90-T0001, Rev. 0, Engineering Specification for Seismic Qualification of Seismic Category I/II Equipment and Tanks	The Basis of Design document specifies that mechanical equipment is to be designed for a nominal plant life of 40 years. The Materials for Ancillary Equipment document specifies that ancillary equipment downstream of a waste source vessel or miscellaneous treatment unit is to be constructed of the same or better material and with the same corrosion allowance as the source vessel or miscellaneous treatment unit. The Pipe Stress Design Criteria document requires the use of the ASME B31.3 Code for design of ancillary equipment. ASME B31.3 requires explicit consideration of operating pressure, operating temperature, thermal expansion/contraction, settlement, vibration, and corrosion allowance in the design of ancillary equipment. Elements of the ASME B&PV Code, Section III, Division1, Subsection NC, Appendix N and Appendix F are used to supplement the requirements of ASME B31.3 for seismic design of SC-I/SC-II ancillary equipment. Similarly, ASME B&PV Code, Section III, Division 1, Subsection NC and Appendix F, and the Uniform Building Code (UBC) are used to supplement the requirements of ASME B31.3 for seismic design of SC-III/SC-IV piping. Details of the seismic design methods are discussed in the Pipe Stress Design Criteria document. The Engineering Specification for Pressure Vessel Design and Fabrication addresses the same load cases and corrosion allowance in the design and fabrication process for the FEP Condensers. Supplementary seismic design criteria are specified in the Engineering Specification for Seismic Qualification Criteria for Pressure Vessels to provide for the condensers seismic design analysis. Additional details of the seismic analysis methodology (ASME B&PV Code, Section VIII, Division 2) are furnished in the Engineering Specification for Seismic Qualification of Seismic Category I/II Equipment and Tanks. These are adequate and acceptable codes and standards to assure the ancillary equipment has adequate strength at the end of its design life.

	Information Assessed	Source of Information	Discussion
Supports	Ancillary equipment supports are adequately designed.	24590-WTP-DC-PS-01-002, Rev 2, Pipe Support Design Criteria; ASME Boiler and Pressure Vessel (B&PV) Code, Section III, Rules for Construction of Nuclear Facility Components, Division 1, Subsection NF and Appendix F, 1995; 24590-WTP-3PS-MV00-T0001, Rev. 1, Engineering Specification for Pressure Vessel Design and Fabrication; ASME Boiler and Pressure Vessel (B&PV) Code, Section VIII, Division 1, Rules for Construction of Pressure Vessels, American Society of Mechanical Engineers; 24590-WTP-PER-PS-02-001, Rev. 4, Ancillary Equipment Pipe Support Design; 24590-WTP-PL-PS-01-001, Rev 1, Verification and Validation Test Plan for Bechtel's ME150 Pipe Support Family of Programs (PCFAPPS)	The Pipe Support Design Criteria document considers all loadings identified in ASME B31.3 and utilizes ASME Section III, Division 1, Subsection NF and Appendix F to supplement the requirements of ASME B31.3 for seismic design of SC-I/II and SC-III/IV pipe supports. Loads are evaluated against the design criteria provided in ASME Section III as discussed in the Pipe Support Design Criteria document. Supports for the FEP Condensers are to be designed in accordance with the requirements in ASME B&PV Code, Section VIII, Division 1 as specified in the Engineering Specification for Pressure Vessel Design and Fabrication. Bounding load cases are passed to the pipe support designers from the results of the ancillary equipment piping stress analyses. Analysis is by manual calculation or approved computer programs that have been verified and validated. These are appropriate codes and standards that assure adequate design of ancillary equipment supports for the FEP system. Design standards for vessel internal equipment supports are discussed in the integrity assessment for the FEP system vessels.
Connections	Seams and connections are adequately designed.	24590-WTP-DB-ENG-01-001, Rev 1A, Basis of Design; 24590-WTP-DC-PS-01-001, Rev 2, Pipe Stress Design Criteria including "Pipe Stress Criteria" and "Span Method Criteria"; 24590-WTP-3PS-MV00-T0001, Rev. 1, Engineering Specification for Pressure Vessel Design and Fabrication; ASME Boiler and Pressure Vessel Code, Section IX, Welding and Brazing Qualifications; ASME/ANSI B16.5 1988 Edition, Piping Flanges and Flanged Fittings; 24590-WTP-3PS-PF00-T0001, Rev. 1, Engineering Specification for Process Jumper Fabrication for PT and HLW	The Basis of Design specifies that in-cell piping that is non-maintainable will be fully welded. The Pipe Stress Design Criteria specifies the ASME B31.3 Process Piping design code for the piping systems. Welding is to be performed in accordance with the requirements of ASME B31.3 and the ASME B&PV Code, Section IX. Welding for the FEP Condensers is to be performed in accordance with ASME B&PV Code, Section VIII, Division 1 and ASME B&PV Code, Section IX. ANSI B 16.5 requirements are specified for ancillary equipment flange connections. Remote handled piping connections in the central hot cell are made using jumpers fabricated in accordance with the Engineering Specification for Process Jumper Fabrication for PT and HLW. These are adequate and appropriate codes and standards for design and fabrication of the FEP system ancillary equipment seams and connections.

	Information Assessed	Source of Information	Discussion
Frost Heave	The system will withstand the effects of frost heave.	System Description listed under References above; 24590-WTP-DC-ST-01-001, Rev. 1, Structural Design Criteria	The FEP system ancillary equipment considered in this assessment is located in a central hot cell, adjacent process cells, and surrounding process areas which are located inside the Pretreatment Facility. The Structural Design Criteria requires that all structural foundations shall extend into the surrounding soil below the frost line in order to preclude frost heave. The frost line is 30 in. below grade. Therefore the FEP system ancillary equipment is not subject to the effects of frost heave.
Waste Characteristics	Characteristics of the waste to be stored or treated have been identified (ignitable, reactive, toxic, specific gravity, vapor pressure, flash point, temperature)	Drawings and System Description listed above under references; 24590-WTP-PSAR-ESH-01-002-02, Rev. 1a, Preliminary Safety Analysis Report (PSAR) to Support Construction Authorization; PT Facility Specific Information	The FEP system vessels and miscellaneous treatment units provide for receipt and concentration of waste feed from the DOE and recycle streams from within the PTF Facility. The PSAR provides a summary of potential hazardous conditions associated with the PTF FEP system vessels, miscellaneous treatment units, and ancillary equipment. The System Description identifies the main important-to-safety function for the ancillary equipment to be provide primary confinement of the wastes during normal operations, abnormal operations and during and after a SC-I/II or SC-III Design Earthquake. Ancillary equipment integrity is also necessary to provide continued important-to-safety functions for Waste Feed Evaporator Feed vessels FEP-VSL-00017A/B and the Waste Feed Separator Vessels FEP-SEP-00001A/B. These functions include hydrogen dilution and primary waste containment. Plant Service Air must function to operate Pulse Jet Mixers for hydrogen control in the system vessels. Plant Service Air must be available for continued operation of the Pretreatment Vessel Vent Process System (PVP). This system must be available for control of vessel offgas and hydrogen buildup. The PVP system includes the important-to-safety air supply for the Passive Air Purge hydrogen control system used during post Design Earthquake conditions. The rest of the ancillary equipment provides a primary containment function to protect facility workers and co-located workers from the hazardous wastes.

	Information Assessed	Source of Information	Discussion
Waste Char.	Ancillary equipment is designed to handle the wastes with the characteristics defined above and any treatment reagents.	System Description listed above under References	The System Description indicates that the FEP vessels and miscellaneous treatment units are used primarily for concentration of waste feed streams and recycle streams. Treatment reagents are not normally used in these vessels, miscellaneous treatment units and ancillary equipment during normal operations.
Compatibility	The pH range of the waste, waste temperature and the corrosion behavior of the structural materials are adequately addressed. Ancillary equipment material and protective coatings ensure the ancillary equipment structure is adequately protected from the corrosive effects of the waste stream and external environments. The protection is sufficient to ensure the equipment will not leak or fail for the design life of the system.	24590-WTP-DB-ENG-01-001, Rev 1A, Basis of Design; System Description listed above under References; 24590-WTP-PER-M-02-002, Rev 1, Materials for Ancillary Equipment; Plant Item Material Data Sheets listed above under References; 24590-WTP-3PS-NN00-T0001, Rev 0, Engineering Specification for Hot and Anti-Sweat Thermal Insulation	The Basis of Design identifies a service design life of 40 years for the ancillary equipment. All non-maintainable items will be designed to last the life of the facility. The System Description identifies that the waste to be handled in the FEP system vessels, miscellaneous treatment units, and ancillary equipment is waste feed or recycle streams from elsewhere in the PTF being treated for a primary concentration to about 5 molar Na content. This process step occurs prior to ultrafiltration to remove solids. The Materials for Ancillary Equipment document requires that the material selection and corrosion/erosion allowances for ancillary equipment in contact with the waste will be equal to or better than the material and corrosion allowance of the waste source vessels/ miscellaneous treatment units except as noted therein. The Plant Item Material Data Sheets provide the information used to select the materials for the FEP system condensers and the corrosion allowance. The condensers are to be fabricated using 316 stainless steel (maximum 0.030% Carbon, dual certified) which is hereinafter referred to as 316L stainless steel. The Thermal Insulation specification requires that all insulating materials used on the outside of ancillary equipment be pre-approved for use on austenitic stainless steel in accordance with applicable ASTM procedures and tests to preclude external corrosion of ancillary equipment. Because both internal and external corrosion have been considered in the design and fabrication, the ancillary equipment will provide the expected design service life.

	Information Assessed	Source of Information	Discussion
Corrosion Allowance	Corrosion allowance is adequate for the intended service life of the ancillary equipment.	24590-WTP-DC-PS-01-001, Rev 2, Pipe Stress Design Criteria including "Pipe Stress Criteria" and "Span Method Criteria"; 24590-WTP-DB-ENG-01-001, Rev 1A, Basis of Design; 24590-WTP-PER-M-02-002, Rev 1, Materials for Ancillary Equipment; Plant Item Material Data Sheets listed above under References	The Pipe Stress Design Criteria requires use of the ASME B31.3 Code for ancillary equipment design. Consideration of corrosion, including corrosion allowance, is a mandatory requirement of ASME B31.3. A required service life of 40 years is identified in the Basis of Design for ancillary equipment located in inaccessible process cells. The Materials for Ancillary Equipment document requires that downstream ancillary equipment is to be constructed of equal or better materials than the source vessels/ miscellaneous treatment units. The downstream ancillary equipment is to be provided with the same corrosion allowance as the source vessels or miscellaneous treatment units including any additional erosion allowance where appropriate except as noted therein. The Plant Item Material Data Sheets provide the information used to select the materials for the FEP system condensers and the corrosion allowance. The condensers are to be fabricated using 316L stainless steel with a corrosion allowance of 0.04 in. for a 40 year design life. These requirements are adequate to assure the ancillary equipment provides the intended service life.

	Information Assessed	Source of Information	Discussion
Strength	Pressure controls (vents and relief valves) are adequately designed to ensure pressure relief if normal operating pressures in the vessels are exceeded.	P&ID drawings and Mechanical Data Sheets listed under references above. 24590-WTP-DC-PS-01-001, Rev 2, Pipe Stress Design Criteria including "Pipe Stress Criteria" and "Span Method Criteria"; 24590-WTP-3PS-MES0-T0001, Rev. 0, Engineering Specification for Shell and Tube Heat Exchangers 24590-WTP-PER-PL-02-001, Rev. 5, Piping Material Class Description	The Pipe Stress Design Criteria document specifies ASME B31.3 as the design code for the WTP ancillary equipment. ASME B31.3 requires provision be made to safely contain or relieve any pressure to which the ancillary equipment may be subjected. ASME B31.3 piping not protected by a pressure relieving device, or that can be isolated from a pressure relieving device must be designed for at least the highest pressure that can be developed. The Piping Material Class Description document provides bounding pressure and temperature limits for each of the piping material classes shown on the P&ID drawings. The Engineering Specification for Shell and Tube Heat Exchanges requires the design and fabrication of the FEP system condensers to meet ASME B&PV Code, Section VIII, Division 1 requirements. The Section VIII requirements for pressure relief are similar to those for ASME B31.3. Pressure relief provisions are adequate for the intended service.
	Maximum flows and any unusual operating stresses are identified	P&ID drawings listed under references above. 24590-WTP-DC-PS-01-001, Rev 2, Pipe Stress Design Criteria including "Pipe Stress Criteria" and "Span Method Criteria"; 24590-WTP-PER-PL-02-001, Rev. 5, Piping Material Class Description; 24590-WTP-3PS-MES0-T0001, Rev. 0, Engineering Specification for Shell and Tube Heat Exchangers	The expected flow paths for the ancillary equipment are shown on the P&ID drawings. The Pipe Stress Design Criteria document specifies the ASME B31.3 code for piping design. This code requires piping to be designed to the highest pressure that can be developed in a piping system assuring that maximum operating stresses remain within code allowables. Piping material classes are shown on the P&ID drawings. The Piping Material Class Description document lists the enveloping pressure and temperature limits for each piping material class. The Engineering Specification for Shell and Tube Heat Exchanges requires the design and fabrication of the FEP system condensers to meet ASME B&PV Code, Section VIII, Division 1 requirements. The Section VIII requirements also require that maximum operating stresses remain within code allowables

	Information Assessed	Source of Information	Discussion
Secondary Containment	Ancillary equipment is designed with secondary containment that is constructed of materials compatible with the waste and of sufficient strength to prevent failure (pressure gradients, waste, climatic conditions, daily operations), provided with a leak-detection system, and designed to drain and remove liquids.	Drawings and System Description listed under references above	The ancillary equipment considered in this assessment is located in a central hot cell, adjacent inaccessible process cells and surrounding process areas within the Pretreatment Facility. Secondary containment for ancillary equipment within the hot cell and inaccessible process cells is provided by the liners, sumps, and leak-detection systems within the cells which are outside the scope of this integrity assessment. Secondary containment in the surrounding process areas is provided by special protective coatings which are also outside the scope of this integrity assessment.

Job No. 24590

Bechtel National, Inc.

SUPPLIER DOCUMENT STATUS

1. [X] **Work may proceed.**
2. [ ] **Revise and resubmit. Work may proceed subject to resolution of indicated comments.**
3. [ ] **Revise and resubmit. Work may not proceed.**
4. [ ] **Review not required. Work may proceed.**

Permission to proceed does not constitute acceptance or approval of design details, calculations, analyses, test methods, or materials developed or selected by the supplier and does not relieve supplier from full compliance with contractual obligations.

REVIEWED									

G-321 Document Category N/A
[From Supplement A to G-321-E (E) or G-321-V (V), as applicable, or "N/A" if SSRS is used]

Supersedes BNI Document No. N/A Rev. _____
[When applicable]

Accepted by D C Palmer (Print Name) (Signature) (Date)

Released by N/A
[When applicable] Print Name Signature Date

416 GP&S 7-03

24590-CM-HC4-HXYG-00138-02-00020
REV. 00A

PURCHASE ORDER SUBMITTAL

Best Available Copy

R10273686

IQRPE REVIEW
OF
PRETREATMENT FACILITY (PTF) WASTE FEED EVAPORATION PROCESS SYSTEM (FEP) PLANT ITEMS
(FEP-VSL-00017A/B, FEP-VSL-00005, FEP-SEP-00001A/B, AND FEP-RBLR-00001A/B)

"I, Tarlok S. Hundal, have reviewed, and certified a portion of the design of a new tank system or component located at the Hanford Waste Treatment Plant, owned/operated by Department of Energy, Office of River Protection, Richland, Washington. My duties were independent review of the current design for the Pretreatment Facility (PTF) Waste Feed Evaporation Process System (FEP) Plant Items (FEP-VSL-00017A/B, FEP-VSL-00005, FEP-SEP-00001A/B, AND FEP-RBLR-00001A/B) as required by the Dangerous Waste Regulations, namely, WAC 173-303-640(3) applicable paragraphs, i.e., (a) through (g)."

"I certify under penalty of law that I have personally examined and am familiar with the information submitted in this document and all attachments and that, based on my inquiry of those individuals immediately responsible for obtaining the information, I believe that the information is true, accurate, and complete. I am aware that there are significant penalties for submitting false information, including the possibility of fine and imprisonment."

The documentation reviewed indicates that the design intent fully satisfies the requirements of the WAC.

The attached review is 22 pages numbered 1 through 22.

TARLOK SINGH HUNDAL
STATE OF WASHINGTON
20213
REGISTERED
PROFESSIONAL ENGINEER

EXPIRES: 02/15/06

Signature

3/22/04
Date

24590-CM-HXYG-00138-02-00020, REV. 00A

STRUCTURAL INTEGRITY ASSESSMENT OF THE PRETREATMENT FACILITY (PTF) WASTE FEED EVAPORATION PROCESS SYSTEM (FEP) PLANT ITEMS

(FEP-VSL-00017A/B, FEP-VSL-00005, FEP-SEP-00001A/B, AND FEP-RBLR-00001A/B)

COGEMA-IA-044
REV. 0

Please note that source, special nuclear and byproduct materials, as defined in the Atomic Energy Act of 1954 (AEA), are regulated at the U.S. Department of Energy (DOE) facilities exclusively by DOE acting pursuant to its AEA authority. DOE asserts, that pursuant to the AEA, it has sole and exclusive responsibility and authority to regulate source, special nuclear, and byproduct materials at DOE-owned nuclear facilities. Information contained herein on radionuclides is provided for process description purposes only.

Scope	Scope of this Integrity Assessment	This Integrity Assessment includes the following seven (7) Plant Items (Vessels, Separators, and Reboilers) in the Pretreatment Facility at Elevation 0'-0": - Two FEP Waste Feed Evaporator Feed Vessels (FEP-VSL-00017A/B), located in cell (P-0106) – see pp. 3 thru 7 - One FEP Waste Feed Evaporator Condensate Vessel (FEP-VSL-00005), located in cell (P-0105B) – see pp. 8 thru 12 - Two Waste Feed Evaporator Separators (FEP-SEP-00001A/B), located in cell (P-0106)- see pp. 13 thru 17 - Two Waste Feed Evaporator Reboilers (FEP-RBLR-00001A/B), located in cell (P-0123)- see pp. 18 thru 22 Note: For References see page 2.
Summary of Assessment		For each item of "Information Assessed" (i.e., Criteria) on the following pages, the items listed under "Source of Information" were reviewed and found to furnish adequate design controls and requirements to ensure the design intent fully satisfies the requirements of Washington Administrative Code, WAC-173-303-640, *Dangerous Waste Regulations* for Tank Systems.

References	Material Requisitions, Specifications, Drawings, and Mechanical Data Sheets	Material Requisitions: 24590-QL-MRE-MVA0-00001, Rev. 1 (including Material Requisition Supplement Nos. S01 thru S05 to Rev. 1 of the MR): 24590-QL-MRA-MEVV-00001, Rev. 2 (including Material Requisition Supplement No. S01 to Rev. 2 of the MR): The following Specifications with their appropriate number and revision are included in the above listed Material Requisitions: Engineering Specification for Pressure Vessel Design and Fabrication; Engineering Specification for Seismic Qualification Criteria for Pressure Vessels; Specification for Shell and Tube Heat Exchangers Specification for Welding of Pressure Vessels, Heat Exchangers, and Boilers; General Specification for Supplier Quality Assurance Program Requirements; Specification for Positive Material Identification (PMI); General Specification for Packing, Shipping, Handling, and Storage; Engineering Specification for Pressure Vessel Fatigue Analysis; Engineering Specification for Seismic Qualification of Seismic Category I/II Equipment and Tanks; Engineering Specification for Structural Design Loads for Seismic Category III/IV Equipment and Tanks; Engineering Specification for Forced Circulation Vacuum Evaporator System. Drawings: 24590-PTF-MV-FEP-00001, Rev. 0, Equipment Assembly Waste Feed Evaporator Feed Vessel FEP-VSL-00017A (Q); 24590-PTF-MV-FEP-00002, Rev. 0, Equipment Assembly Waste Feed Evaporator Feed Vessel FEP-VSL-00017B (Q); 24590-PTF-P1-P01T-P0001, Rev. 2, Pretreatment Facility General Arrangement Plan at El. 0'-0"; 24590-PTF-P1-P01T-P0007, Rev. 3, Pretreatment Facility General Arrangement Section A-A; 24590-PTF-P1-P01T-P0008, Rev. 3, Pretreatment Facility General Arrangement Section B-B; 24590-PTF-P1-P01T-P0009, Rev. 6, Pretreatment Facility General Arrangement Section C-C; 24590-PTF-P1-P01T-P0016, Rev. 3, Pretreatment Facility General Arrangement Sect. P-P and Q-Q; 24590-PTF-M6-FEP-P0001, Rev. 0, P&ID-PTF Waste Feed Evaporation Process System Evaporator Feed Vessels FEP-VSL-00017A/B; 24590-PTF-M6-FEP-P0002, Rev. 0, P&ID-PTF Waste Feed Evaporation Process System Separator FEP-SEP-00001A; 24590-PTF-M6-FEP-P0003, Rev. 0, P&ID-PTF Waste Feed Evaporation Process System Condensers and Condensate Collection FEP-VSL-00005; 24590-PTF-M6-FEP-P0004, Rev. 0, P&ID-PTF Waste Feed Evaporation Process System Separator FEP-SEP-00001B; 24590-PTF-M5-V17T-P0004001, Rev. 0, Process Flow Diagram Waste Feed Evaporation Sheet 1 of 2, System FEP; 24590-PTF-M5-V17T-P0004002, Rev. 0, Process Flow Diagram Waste Feed Evaporation Sheet 2 of 2, System FEP; Mechanical Data Sheets: 24590-PTF-MVD-FEP-00001, Rev. 2, Mechanical Data Sheet Waste Feed Evaporator Feed Vessel, (FEP-VSL-00017A); 24590-PTF-MVD-FEP-00002, Rev. 2, Mechanical Data Sheet Waste Feed Evaporator Feed Vessel, (FEP-VSL-00017B); 24590-PTF-MVD-FEP-00003, Rev. 0, Mechanical Data Sheet Waste Feed Evaporator Condensate Vessel, (FEP-VSL-00005); 24590-PTF-MVD-FEP-00006, Rev. 0, Mechanical Data Sheet Waste Feed Evaporator Separator, (FEP-SEP-00001A); 24590-PTF-MVD-FEP-00007, Rev. 0, Mechanical Data Sheet Waste Feed Evaporator Separator, (FEP-SEP-00001B). 24590-PTF-MED-FEP-00009, Rev. 0, Mechanical Data Sheet Waste Feed Evaporator Reboiler, (FEP-RBLR-00001A); 24590-PTF-MED-FEP-00010, Rev. 0, Mechanical Data Sheet Waste Feed Evaporator Reboiler, (FEP-RBLR-00001B);

	Information Assessed	Source of Information	Assessment
Design	Plant Items design standards are appropriate and adequate for the Plant Item's intended use.	Specifications listed under Material Requisitions, Drawings, and Mechanical Data Sheets listed above under References; ASME Boiler and Pressure Vessel Code, Section VIII, Division 1, Rules for Construction of Nuclear Power Plant Components, 1995; ASME Boiler and Pressure Vessel Code, Section VIII, Division 2, Alternative Rules; 24590-PTF-3YD-FEP-00001, Rev. 0, System Description for Waste Feed Evaporation Process (FEP), (Including SDCN No. 24590-PTF-3YN-FEP-00001).	The Specification for Vessel Design and Fabrication requires the FEP system Waste Feed Evaporator Vessels, FEP-VSL-00017A/B and all appurtenances to be designed to the ASME Section VIII, Division 1 rules which are appropriate for the pressure Plant Items operating with mixed waste solutions over the pressure and temperature ranges specified for these Plant Items. Supplementary requirements are specified in the Engineering Specification for Pressure Vessel Design and Fabrication. Supplementary requirements address pressure vessel fatigue analysis, positive material identification, lifting attachment design, equipment drop evaluation, fabrication tolerances, acceptable welding procedures for the Plant Item and appurtenances, welder qualifications and testing records, NDE inspections and records, and lifting, packaging, shipping, handling and storage requirements. These Plant Items are subjected to cyclic loading. The Specification for Fatigue Analysis requires the use of ASME Section VIII, Division 2 rules for the Plant Item components with a high number of load cycles. These are adequate and acceptable design standards for the intended use of the Plant Item. Each Plant Item is vertical with a 264 in. ID and a height of 273 in. from bottom tangent line to top tangent line supported on a cylindrical skirt (3/4" thick plate x approx. 7'-6" high) which in turn is supported on a ring beam anchored to the concrete floor at Elev. 0'-0". The Plant Item's top and bottom heads are semi-elliptical, built with 3/4" minimum thick plate. The shell is specified to be made of 1" minimum thick plate. The Plant Item has internal equipment including eight pulse jet mixers and one charge vessel supported from the top head. Material for the Plant Item's shell, heads, and internal equipment is SA-240 316 stainless steel (0.030% maximum carbon content, dual certified) and is hereafter referred to as 316. The supporting skirt is SA-240 304 stainless steel (0.030% maximum carbon content, dual certified) and is hereafter referred to as 304. The operating Plant Item volume is to be about 71,300 gallons and the total internal volume is to be about 85,500 gallons.

	Information Assessed	Source of Information	Assessment
Design	If a non-standard Plant Item is to be used, the design calculations demonstrate sound engineering principles of construction.	Specifications listed under Material Requisitions, Drawings, and Mechanical Data Sheets listed above under References.	The FEP Waste Feed Evaporator Feed Vessels, FEP-VSL-00017A/B are standard ASME Section VIII, Div. 1 vessels. The Mechanical Data Sheets require that the ASME Section VIII, Division 1 Plant Items be delivered after design, fabrication, inspection and testing with an ASME code stamp and that the Plant Item be nationally registered. Supplemental design information is provided by the reference documents listed in the Source of Information column for utilizing sound engineering principles of construction of the Plant Items.
	Plant Item has adequate strength, after consideration of the corrosion allowance, to withstand the operating pressure, operating temperature, and seismic loads.	Specifications listed under Material Requisitions, Drawings, and Mechanical Data Sheets listed above under References; 24590-PTF-3YD-FEP-00001, Rev. 0, System Description for Waste Feed Evaporation Process (FEP), (Including SDCN No. 24590-PTF-3YN-FEP-00001).	The Mechanical Data Sheets identify the Plant Items' operating pressure and temperature ranges, the materials selected for the Plant Items, the corrosion allowance, and the Plant Items quality level and seismic category which determine the requirements for seismic design. The design specifications for the Plant Items require specific consideration of the operating pressures and temperatures and seismic loads in the design process. ASME Section VIII, Division 1 requires that the corrosion allowance thickness be excluded from the nominal Plant Item thickness when evaluating the adequacy of Plant Item components for these loads at the end of life. The Engineering Specification for Seismic Qualification Criteria for Pressure Vessels adopts ASME Section VIII, Division 2 design rules to address seismic design and analysis of the Plant Item and ASME Section VIII, Division 1 for the Plant Item supports. Detailed requirements for seismic load determination are furnished in the specification for Seismic Category I/II Equipment and Tanks. These codes and standards are adequate and appropriate for the design of the FEP Plant Items to withstand operating pressure and temperature loads and seismic loads for the specified design life.

	Information Assessed	Source of Information	Assessment
Foundation	Plant Item foundation will maintain the load of a full Plant Item.	Specifications listed under Material Requisition above under References; AISC Manual of Steel Construction, 9th Edition, American Institute of Steel Construction; 24590-WTP-DB-ENG-01-001, Rev. 1A, Basis of Design.	The Engineering Specification for Pressure Vessel Design and Fabrication requires the use of ASME BPV Code, Section VIII, Division 1 and AISC Manual of Steel Construction for the design of the Plant Item supports. This code ensures an adequate design for the Plant Item supports. Chapter 14 of the Basis of Design document requires that the Plant Item foundation design must be adequate to support the loads from full Plant Items.
	If in an area subject to flooding, the Plant Item is anchored.	Specifications listed under Material Requisition under References.	Buoyant forces on an empty Plant Item in a flooded room are mandatory standard design loads in the Specification for Pressure Vessel Design and Fabrication.
	Plant Item system will withstand the effects of frost heave.	24590-WTP-DB-ENG-01-001, Rev. 1A, Basis of Design.	The Basis of Design document requires that all structural foundations for outdoor equipment to extend a distance below grade that exceeds the 30" depth of the frost line. These Plant Items are located inside/interior of the building at (Elevation 0'-0" level with 8 ft thick foundation mat), therefore, the Plant Item foundation is not subject to frost heave.

	Information Assessed	Source of Information	Assessment
Waste Characteristics	Characteristics of the waste to be stored or treated have been identified (ignitable, reactive, toxic, specific gravity, vapor pressure, flash point, storage temperature)	Mechanical Data Sheet listed above under References; Plant Item Material Selection Data Sheet, 24590-PTF-N1D-FEP-P0002, Rev. 0, FEP-VSL-000017A/B (PTF) Waste Feed Evaporator Feed Vessel; 24590-WTP-PSAR-ESH-01-002-02, Rev. 1a, Preliminary Safety Analysis Report to Support Construction Authorization: PT Facility Specific Information; Department of Ecology Permit # WA7890008967, *Dangerous Waste Portion of the Hanford Facility Resource Conservation and Recovery Act Permit for the Treatment, Storage, and Disposal of Dangerous Waste,* Chapter 10, and Attachment 51, "Hanford Tank Waste Treatment and Immobilization Plant."	The Mechanical Data Sheets present the waste specific gravity, storage temperatures and pressures. The Plant Item Material Selection Data Sheet addresses the pH range and chemical composition of the waste to select appropriate Plant Item materials and specify the corrosion allowance. Other waste characteristics that are hazardous, such as ignitability, reactivity, and toxicity are addressed by the Preliminary Safety Analysis Report for the PTF Building and in Part A of the Permit as an integral part of the design process. The FEP Plant Items provide primary containment of the waste during normal operations, abnormal operations, and during and after a Design Basis Earthquake. The Plant Item vent system draws air into the vapor space while removing gases to maintain hydrogen concentration below the lower flammability limit (LFL). Forced purge air is also supplied to each Plant Item. Each Plant Item also has eight pulse jet mixers to blend and maintain solids suspension in the waste. The Plant Items are grounded to control ignition sources.
	Plant Item is designed to store or treat the wastes with the characteristics defined above and any treatment reagents.	Plant Item Material Selection Data Sheet, 24590-PTF-N1D-FEP-P0002, Rev. 0, FEP-VSL-000017A/B (PTF) Waste Feed Evaporator Feed Vessel; 24590-PTF-3YD-FEP-00001, Rev. 0, System Description for Waste Feed Evaporation Process (FEP), (Including SDCN No. 24590-PTF-3YN-FEP-00001).	The Plant Item Material Selection Data Sheet demonstrates that the Plant Item is designed to process the wastes discussed above. The System Description discusses normal and abnormal operations for the FEP Plant Item. Waste feed at low sodium molarity can be blended with recycled and concentrated to approximately 5 molar for optimization of down stream unit operations. Acid and water will be used for flushing/rinsing.
	The waste types are compatible with each other.	24590-PTF-3YD-FEP-00001, Rev. 0, System Description for Waste Feed Evaporation Process (FEP), (Including SDCN No. 24590-PTF-3YN-FEP-00001).	The System Description for the PTF FEP system does not describe any operations where incompatible wastes are mixed in these Plant Items for processing. The primary function of this Plant Item is to receive waste feed and recycles from various process systems FRP, PWD, RDP, and UPF of the PT facility and HLP of HLW facility. These Plant Items blend the received waste and recycle stream to feed the evaporator.

	Information Assessed	Source of Information	Assessment
Corrosion Protection	Plant Item material and protective coatings ensure the Plant Item structure is adequately protected from the corrosive effects of the waste stream and external environments (expected to not leak or fail for the design life of the system)	Drawings and Mechanical Data Sheets listed above under References; Plant Item Material Selection Data Sheet, 24590-PTF-N1D-FEP-P0002, Rev. 0, FEP-VSL-000017A/B (PTF) Waste Feed Evaporator Feed Vessel; 24590-PTF-3YD-FEP-00001, Rev. 0, System Description for Waste Feed Evaporation Process (FEP), (Including SDCN No. 24590-PTF-3YN-FEP-00001).	The Plant Item Material Selection Data Sheet shows that the FEP Waste Feed Evaporator Vessels, FEP-VSL-00017A/B normally operate at a pH of 13 and at a temperature of 75°F. The Plant Items are designed for 15 psig pressure and a temperature of 237°F. Other pertinent Plant Item operation and design information is provided in the Mechanical Data Sheets. Potential acid and water cleaning operations of the Plant Items were also considered. The material selected is 316 and a corrosion allowance of 0.04 in. These Plant Items are located in cell (P-0106) at Elevation 0'-0". The cell is equipped with a sump to pump out any leaks. Therefore, the cell should remain dry during normal operations which will limit external corrosion of the Plant Item over the facility design life.
Corrosion Allowance	Corrosion allowance is adequate for the intended service life of the Plant Item.	Mechanical Data Sheets listed above under References; Plant Item Material Selection Data Sheet, 24590-PTF-N1D-FEP-P0002, Rev. 0, FEP-VSL-000017A/B (PTF) Waste Feed Evaporator Feed Vessel.	The bases for the FEP Plant Items' material selection and corrosion allowance are furnished in the Plant Item Material Selection Data Sheet. Selection of 316 materials with a corrosion allowance of 0.04 in. for a service life of 40 years is adequate and appropriate. The material selection and corrosion allowance are carried forward to the Mechanical Data Sheets.
Pressure Relief	Pressure controls (vents and relief valves) are adequately designed to ensure pressure relief if normal operating pressures in the Plant Item are exceeded.	Drawings listed above under References; 24590-PTF-3YD-FEP-00001, Rev. 0, System Description for Waste Feed Evaporation Process (FEP).	The FEP Waste Feed Evaporator Feed Vessels, FEP-VSL-00017A/B, are designed to overflow into the ultimate overflow Plant Item (PWD-VSL-00033) through an 8" diameter unrestricted line. Plant Item (PWD-VSL-00033) is located in the PTF at Elevation (-) 45'-0", as shown on the drawings and described in the System Description document. These FEP Plant Items are also connected to the PTF vessels vent system to prevent their over pressurization.

	Information Assessed	Source of Information	Assessment
Design	Plant Item design standards are appropriate and adequate for the Plant Item's intended use.	Specifications listed under Material Requisition, Drawings, and Mechanical Data Sheet listed above under References; ASME Boiler and Pressure Vessel Code, Section VIII, Division 1, Rules for Construction of Nuclear Power Plant Components, 1995; ASME Boiler and Pressure Vessel Code, Section VIII, Division 2, Alternative Rules; 24590-PTF-3YD-FEP-00001, Rev. 0, System Description for Waste Feed Evaporation Process (FEP), (Including SDCN No. 24590-PTF-3YN-FEP-00001).	The Specification for Vessel Design and Fabrication requires the FEP system Waste Feed Evaporator Condensate Vessel, FEP-VSL-00005 and all appurtenances to be designed to the ASME Section VIII, Division 1 rules which are appropriate for the pressure Plant Item operating with mixed waste solutions over the pressure and temperature ranges specified for this Plant Item. Supplementary requirements are specified in the Engineering Specification for Pressure Vessel Design and Fabrication. Supplementary requirements address pressure Plant Item fatigue analysis, positive material identification, lifting attachment design, equipment drop evaluation, fabrication tolerances, acceptable welding procedures for the Plant Item and appurtenances, welder qualifications and testing records, NDE inspections and records, and lifting, packaging, shipping, handling and storage requirements. These are adequate and acceptable design standards for the intended use of the Plant Item. The Plant Item is vertical with a 96 in. ID and a height of 128 in. from bottom tangent line to top tangent line supported on a cylindrical skirt which in turn is supported anchored to the concrete floor at Elev. 0'-0". The Plant Item's top and bottom heads and shell are specified to be built with 1/4" thick plate. Material specified for the Plant Item's shell and heads, is SA-240 316 stainless steel (0.030% maximum carbon content, dual certified) and is hereafter referred to as 316. The support skirt material for the Plant Item is specified to be stainless steel with maximum carbon content of 0.030% and is hereafter referred to as 304. The operating Plant Item volume is to be about 4,144 gallons and the total internal volume is to be about 5,022 gallons.
	If a non-standard Plant Item is to be used, the design calculations demonstrate sound engineering principles of construction.	Specifications listed under Material Requisition, Drawings, and Mechanical Data Sheet listed above under References.	The FEP Waste Feed Evaporator Condensate Vessel, FEP-VSL-00005 is a standard ASME Section VIII, Div. 1 vessel. The Mechanical Data Sheet requires that the ASME Section VIII, Division 1 Plant Item be delivered after design, fabrication, inspection and testing with an ASME code stamp and that the Plant Item be nationally registered. Supplemental design information is provided by the reference documents listed in the Source of Information column for utilizing sound engineering principles of construction of the Plant Item.

	Information Assessed	Source of Information	Assessment
Design	Plant Item has adequate strength, after consideration of the corrosion allowance, to withstand the operating pressure, operating temperature, and seismic loads.	Specifications listed under Material Requisition, Drawings, and Mechanical Data Sheet listed above under References; 24590-PTF-3YD-FEP-00001, Rev. 0, System Description for Waste Feed Evaporation Process (FEP), (Including SDCN No. 24590-PTF-3YN-FEP-00001).	The Mechanical Data Sheet identifies the Plant Item's operating pressure and temperature ranges, the materials selected for the Plant Item, the corrosion allowance, and the Plant Item quality level and seismic category which determine the requirements for seismic design. The design specifications for the Plant Item require specific consideration of the operating pressures and temperatures and seismic loads in the design process. ASME Section VIII, Division 1 requires that the corrosion allowance thickness be excluded from the nominal Plant Item thickness when evaluating the adequacy of Plant Item components for these loads at the end of life. The Engineering Specification for Seismic Qualification Criteria for Pressure Vessel adopts ASME Section VIII, Division 2 design rules to address seismic design and analysis of the Plant Item and ASME Section VIII, Division 1 for the Plant Item supports. Detailed requirements for seismic load determination are furnished in the specification for Seismic Category III/IV Equipment and Tanks. These codes and standards are adequate and appropriate for the design of the FEP Plant Item to withstand operating pressure and temperature loads and seismic loads for the specified design life.

	Information Assessed	Source of Information	Assessment
Foundation	Plant Item foundation will maintain the load of a full Plant Item.	Specifications listed under Material Requisition above under References; AISC Manual of Steel Construction, 9th Edition, American Institute of Steel Construction; 24590-WTP-DB-ENG-01-001, Rev. 1A, Basis of Design.	The Engineering Specification for Pressure Vessel Design and Fabrication requires the use of ASME BPV Code, Section VIII, Division 1 and AISC Manual of Steel Construction for the design of the Plant Item supports. This code ensures an adequate design for the Plant Item supports. Chapter 14 of the Basis of Design document requires that the Plant Item foundation design must be adequate to support the loads from full Plant Item.
	If in an area subject to flooding, the Plant Item is anchored.	Specifications listed under Material Requisition under References.	Buoyant forces on an empty Plant Item in a flooded room are mandatory standard design loads in the Specification for Pressure Vessel Design and Fabrication.
	Plant Item system will withstand the effects of frost heave.	24590-WTP-DB-ENG-01-001, Rev. 1A, Basis of Design.	The Basis of Design document requires that all structural foundations for outdoor equipment to extend a distance below grade that exceeds the 30" depth of the frost line. This Plant Item is located inside/interior of the building at (Elevation 0'-0" level with 8 ft thick foundation mat), therefore, the Plant Item foundation is not subject to frost heave.

	Information Assessed	Source of Information	Assessment
Waste Characteristics	Characteristics of the waste to be stored or treated have been identified (ignitable, reactive, toxic, specific gravity, vapor pressure, flash point, storage temperature)	Mechanical Data Sheet listed above under References; Plant Item Material Selection Data Sheet, 24590-PTF-N1D-FEP-P0003, Rev. 0, FEP-VSL-000005 (PTF) Waste Feed Evaporator Condensate Vessel; 24590-WTP-PSAR-ESH-01-002-02, Rev. 1a, Preliminary Safety Analysis Report to Support Construction Authorization: PT Facility Specific Information; Department of Ecology Permit # WA7890008967, *Dangerous Waste Portion of the Hanford Facility Resource Conservation and Recovery Act Permit for the Treatment, Storage, and Disposal of Dangerous Waste,* Chapter 10, and Attachment 51, "Hanford Tank Waste Treatment and Immobilization Plant."	The Mechanical Data Sheet presents the waste specific gravity, storage temperatures and pressures. The Plant Item Material Selection Data Sheet addresses the pH range and chemical composition of the waste to select appropriate Plant Item materials and specify the corrosion allowance. Other waste characteristics that are hazardous, such as ignitability, reactivity, and toxicity are addressed by the Preliminary Safety Analysis Report for the PTF Building and in Part A of the Permit as an integral part of the design process. The FEP Plant Item provides primary containment of the waste during normal operations, abnormal operations, and during and after a Design Basis Earthquake. The Plant Item vent system draws air into the vapor space while removing gases to maintain hydrogen concentration below the lower flammability limit (LFL).
	Plant Item is designed to store or treat the wastes with the characteristics defined above and any treatment reagents.	Plant Item Material Selection Data Sheet, 24590-PTF-N1D-FEP-P0003, Rev. 0, FEP-VSL-000005 (PTF) Waste Feed Evaporator Condensate Vessel; 24590-PTF-3YD-FEP-00001, Rev. 0, System Description for Waste Feed Evaporation Process (FEP), (Including SDCN No. 24590-PTF-3YN-FEP-00001).	The Plant Item Material Selection Data Sheet demonstrates that the Plant Item is designed to process the wastes discussed above. The System Description discusses normal and abnormal operations for the FEP Plant Item. Acid and water will be used for flushing/rinsing.
	The waste types are compatible with each other.	24590-PTF-3YD-FEP-00001, Rev. 0, System Description for Waste Feed Evaporation Process (FEP), (Including SDCN No. 24590-PTF-3YN-FEP-00001).	The System Description for the PTF FEP system does not describe any operations where incompatible wastes are mixed in this Plant Item for processing. The Plant Item is to be compatible with 5M nitric acid used for separator Plant Item decontamination.

	Information Assessed	Source of Information	Assessment
Corrosion Protection	Plant Item material and protective coatings ensure the Plant Item structure is adequately protected from the corrosive effects of the waste stream and external environments (expected to not leak or fail for the design life of the system)	Drawings and Mechanical Data Sheet listed above under References; Plant Item Material Selection Data Sheet, 24590-PTF-N1D-FEP-P0003, Rev. 0, FEP-VSL-000005 (PTF) Waste Feed Evaporator Condensate Vessel; 24590-PTF-3YD-FEP-00001, Rev. 0, System Description for Waste Feed Evaporation Process (FEP), (Including SDCN No. 24590-PTF-3YN-FEP-00001).	The Plant Item Material Selection Data Sheet shows that the FEP Waste Feed Evaporator Condensate Vessel, FEP-VSL-00005 normally operates at a pH of 11 and at a temperature of 110°F. The Plant Item is designed for 15 psig pressure and a temperature of 150°F. Other pertinent Plant Item operation and design information is provided in the Mechanical Data Sheet. Potential acid and water cleaning operations of the Plant Item were also considered. The material selected is 316 and a corrosion allowance of 0.04 in. The Plant Item is located in cell (P-0105B) at Elevation 0'-0". The cell is accessible to pump out any spillage or leaks, therefore, it should remain dry during normal operations which will limit external corrosion of the Plant Item over the facility design life.
Corrosion Allowance	Corrosion allowance is adequate for the intended service life of the Plant Item.	Mechanical Data Sheet listed above under References; Plant Item Material Selection Data Sheet, 24590-PTF-N1D-FEP-P0003, Rev. 0, FEP-VSL-000005 (PTF) Waste Feed Evaporator Condensate Vessel.	The bases for the FEP Plant Item's material selection and corrosion allowance are furnished in the Plant Item Material Selection Data Sheet. Selection of 316 material with a corrosion allowance of 0.04 in. for a service life of 40 years is adequate and appropriate. The material selection and corrosion allowance are carried forward to the Mechanical Data Sheet.
Pressure Relief	Pressure controls (vents and relief valves) are adequately designed to ensure pressure relief if normal operating pressures in the Plant Item are exceeded.	Drawings listed above under References; 24590-PTF-3YD-FEP-00001, Rev. 0, System Description for Waste Feed Evaporation Process (FEP), (Including SDCN No. 24590-PTF-3YN-FEP-00001).	The FEP Waste Feed Evaporator Condensate Vessel, FEP-VSL-00005, is designed to have an overflow nozzle as described in the Engineering Specification for Forced Circulation Vacuum Evaporator System and in the System Description document. The condensate Plant Item overflows to PWD Plant Item (PWD-VSL-00033) located at Elev. (-) 45'-0" as shown on the drawings. This Plant Item is also connected to the PTF vessels vent system to prevent their over pressurization.

	Information Assessed	Source of Information	Assessment
Design	Plant Items design standards are appropriate and adequate for the Plant Item's intended use.	Specifications listed under Material Requisition, Drawings, and Mechanical Data Sheets listed above under References; ASME Boiler and Pressure Vessel Code, Section VIII, Division 1, Rules for Construction of Nuclear Power Plant Components, 1995; ASME Boiler and Pressure Vessel Code, Section VIII, Division 2, Alternative Rules; 24590-PTF-3YD-FEP-00001, Rev. 0, System Description for Waste Feed Evaporation Process (FEP), (Including SDCN No. 24590-PTF-3YN-FEP-00001).	The Specification for Vessel Design and Fabrication requires the FEP system Waste Feed Evaporator Separators, FEP-SEP-00001A/B and all appurtenances to be designed to the ASME Section VIII, Division 1 rules which are appropriate for pressure Plant Items operating with mixed waste solutions over the pressure and temperature ranges specified for these Plant Items. Supplementary requirements are specified in the Engineering Specification for Pressure Vessel Design and Fabrication. Supplementary requirements address pressure Plant Item fatigue analysis, positive material identification, lifting attachment design, equipment drop evaluation, fabrication tolerances, acceptable welding procedures for the Plant Items and appurtenances, welder qualifications and testing records, NDE inspections and records, and lifting, packaging, shipping, handling and storage requirements. These are adequate and acceptable design standards for the intended use of the Separators. Each Separator is vertical having an operating volume of about 3,700 gallons and a total volume of about 11,400 gallons. The Separators heads and shells are specified to be built with 1/4" thick plate. The Separator material including support legs, is specified to be as SA 240 304 stainless steel (0.030% maximum carbon content, dual certified) and is hereafter referred to as 304.
	If a non-standard Plant Item is to be used, the design calculations demonstrate sound engineering principles of construction.	Specifications listed under Material Requisition, Drawings, and Mechanical Data Sheets listed above under References.	The FEP Waste Feed Evaporator Separators, FEP-SEP-00001A/B are standard ASME Section VIII, Div. 1 vessels. The Mechanical Data Sheets require that the ASME Section VIII, Division 1 Plant Items be delivered after design, fabrication, inspection, and testing with an ASME code stamp and that these Plant Items be nationally registered. Supplemental design information is provided by the reference documents listed in the Source of Information column for utilizing sound engineering principles of construction of the Plant Items.

	Information Assessed	Source of Information	Assessment
Design	Plant Item has adequate strength, after consideration of the corrosion allowance, to withstand the operating pressure, operating temperature, and seismic loads.	Specifications listed under Material Requisition, Drawings, and Mechanical Data Sheets listed above under References; 24590-PTF-3YD-FEP-00001, Rev. 0, System Description for Waste Feed Evaporation Process (FEP), (Including SDCN No. 24590-PTF-3YN-FEP-00001).	The Mechanical Data Sheets identify the Separators' operating pressure and temperature ranges, the materials selected for the Plant Items, the corrosion allowance, and the Plant Item quality level and seismic category which determine the requirements for the seismic design. The design specifications for the Plant Items require specific consideration of the operating pressures and temperatures and seismic loads in the design process. ASME Section VIII, Division 1 requires that the corrosion allowance thickness be excluded from the nominal wall thickness when evaluating the adequacy of components for the applicable loads at the end of life. The Engineering Specification for Seismic Qualification Criteria for Pressure Vessels adopts ASME Section VIII, Division 2 design rules to address seismic design and analysis of the Plant Items and ASME Section VIII, Division 1 for their supports. Detailed requirements for seismic load determination are furnished in the specification for Seismic Category I/II Equipment and Tanks. These codes and standards are adequate and appropriate for the design of the FEP Plant Items to withstand operating pressure and temperature loads and seismic loads for the specified design life.

	Information Assessed	Source of Information	Assessment
Foundation	Plant Item foundation will maintain the load of a full Plant Item.	Specifications listed under Material Requisition above under References; AISC Manual of Steel Construction, 9th Edition, American Institute of Steel Construction; 24590-WTP-DB-ENG-01-001, Rev. 1A, Basis of Design.	The Engineering Specification for Pressure Vessel Design and Fabrication requires the use of ASME BPV Code, Section VIII, Division 1 and AISC Manual of Steel Construction for the design of these Plant Item supports. This code ensures an adequate design for the Plant Item supports. Chapter 14 of the Basis of Design document requires that the Plant Item foundation design must be adequate to support the loads from full Plant Item.
	If in an area subject to flooding, the Plant Item is anchored.	Specifications listed under Material Requisition under References.	Buoyant forces on an empty Plant Item in a flooded room are mandatory standard design loads in the Specification for Pressure Vessel Design and Fabrication.
	Plant Item system will withstand the effects of frost heave.	24590-WTP-DB-ENG-01-001, Rev. 1A, Basis of Design.	The Basis of Design document requires that all structural foundations for outdoor equipment to extend a distance below grade that exceeds the 30" depth of the frost line. These Plant Items are located inside/interior of the building at (Elevation 0'-0" level with 8 ft thick foundation mat), therefore, the Plant Item foundation is not subject to frost heave.

	Information Assessed	Source of Information	Assessment
Waste Characteristics	Characteristics of the waste to be stored or treated have been identified (ignitable, reactive, toxic, specific gravity, vapor pressure, flash point, storage temperature)	Mechanical Data Sheets listed above under References; Plant Item Material Selection Data Sheet, 24590-PTF-N1D-FEP-P0007, Rev. 0, FEP-SEP-00001A/B (PTF) Waste Feed Evaporator Separators; 24590-WTP-PSAR-ESH-01-002-02, Rev. 1a, Preliminary Safety Analysis Report to Support Construction Authorization: PT Facility Specific Information; Department of Ecology Permit # WA7890008967, *Dangerous Waste Portion of the Hanford Facility Resource Conservation and Recovery Act Permit for the Treatment, Storage, and Disposal of Dangerous Waste,* Chapter 10, and Attachment 51, "Hanford Tank Waste Treatment and Immobilization Plant."	The Mechanical Data Sheets present the waste specific gravity, storage temperatures and pressures. The Plant Item Material Selection Data Sheet addresses the pH range and chemical composition of the waste to select appropriate component materials and specify the corrosion allowance. Other waste characteristics that are hazardous, such as ignitability, reactivity, and toxicity are addressed by the Preliminary Safety Analysis Report for the PTF Building and in Part A of the Permit as an integral part of the design process. These FEP Plant Items provide primary containment of the waste during normal operations, abnormal operations, and during and after a Design Basis Earthquake. These Separators are to have 2" inlet nozzle to supply dilution air to negate hydrogen buildup.
	Plant Item is designed to store or treat the wastes with the characteristics defined above and any treatment reagents.	Plant Item Material Selection Data Sheet, 24590-PTF-N1D-FEP-P0007, Rev. 0, FEP-SEP-00001A/B (PTF) Waste Feed Evaporator Separators; 24590-PTF-3YD-FEP-00001, Rev. 0, System Description for Waste Feed Evaporation Process (FEP), (Including SDCN No. 24590-PTF-3YN-FEP-00001).	The Plant Item Material Selection Data Sheet demonstrates that the Separators are designed to process the wastes discussed above. The System Description discusses normal and abnormal operations for the FEP Plant Items. Acid and water will be used for flushing/rinsing.
	The waste types are compatible with each other.	24590-PTF-3YD-FEP-00001, Rev. 0, System Description for Waste Feed Evaporation Process (FEP), (Including SDCN No. 24590-PTF-3YN-FEP-00001).	The System Description for the PTF FEP system does not describe any operations where incompatible wastes are mixed in these Plant Items for processing. These Separators as part of the evaporations process provide optimum conditions for waste processing via ultrafiltration and ion exchange.

	Information Assessed	Source of Information	Assessment
Corrosion Protection	Plant Item material and protective coatings ensure the Plant Item structure is adequately protected from the corrosive effects of the waste stream and external environments (expected to not leak or fail for the design life of the system)	Drawings and Mechanical Data Sheets listed above under References; Plant Item Material Selection Data Sheet, 24590-PTF-N1D-FEP-P0007, Rev. 0, FEP-SEP-00001A/B (PTF) Waste Feed Evaporator Separators; 24590-PTF-3YD-FEP-00001, Rev. 0, System Description for Waste Feed Evaporation Process (FEP), (Including SDCN No. 24590-PTF-3YN-FEP-00001).	The Plant Item Material Selection Data Sheet shows that the FEP Waste Feed Evaporator Separators, FEP-SEP-00001A/B normally operate at a pH of 13 and at a temperature of 122°F. These Plant Items are designed for 15 psig pressure and a temperature of 250°F. Other pertinent Plant Item operation and design information is provided in the Mechanical Data Sheets. Potential acid and water cleaning operations of the Plant Items were also considered. The material selected is 304 and a corrosion allowance of 0.04 in. These Plant Items are located in cell (P-0105B) at Elevation 0'-0". The cell is equipped with a sump to pump out any leaks, therefore, the cell should remain dry during normal operations which will limit external corrosion of the Separators over the facility design life.
Corrosion Allowance	Corrosion allowance is adequate for the intended service life of the Plant Item.	Mechanical Data Sheets listed above under References; Plant Item Material Selection Data Sheet, 24590-PTF-N1D-FEP-P0007, Rev. 0, FEP-SEP-00001A/B (PTF) Waste Feed Evaporator Separators.	The bases for the Separators material selection and corrosion allowance are furnished in the Plant Item Material Selection Data Sheet. Selection of 304 material with a corrosion allowance of 0.04 in. for a service life of 40 years is adequate and appropriate. The material selection and corrosion allowance are carried forward to the Mechanical Data Sheets.
Pressure Relief	Pressure controls (vents and relief valves) are adequately designed to ensure pressure relief if normal operating pressures in the Plant Item are exceeded.	Drawings listed above under References; 24590-PTF-3YD-FEP-00001, Rev. 0, System Description for Waste Feed Evaporation Process (FEP), (Including SDCN No. 24590-PTF-3YN-FEP-00001).	The FEP Waste Feed Evaporator Separators, FEP-SEP-00001A/B, are connected to the PTF PVP system, which will prevent their over-pressurization.

	Information Assessed	Source of Information	Assessment
Design	Plant Items design standards are appropriate and adequate for the Plant Item's intended use.	Specifications listed under Material Requisition, Drawings, and Mechanical Data Sheets listed above under References; ASME Boiler and Pressure Vessel Code, Section VIII, Division 1, Rules for Construction of Nuclear Power Plant Components, 1995; ASME Boiler and Pressure Vessel Code, Section VIII, Division 2, Alternative Rules; 24590-PTF-3YD-FEP-00001, Rev. 0, System Description for Waste Feed Evaporation Process (FEP), (Including SDCN No. 24590-PTF-3YN-FEP-00001).	The Specification for Forced Circulation Vacuum Evaporator System requires the FEP system Waste Feed Evaporator Reboilers, FEP-RBLR-00001A/B and all appurtenances to be designed per the Specification for Shell and Tube Heat Exchangers. This Specification supplements the Specification for Vessel Design and Fabrication which requires using the ASME Section VIII, Division 1 rules which are appropriate for the Plant Items operating with mixed waste solutions over the pressure and temperature ranges specified for these Plant Items. Supplementary requirements are specified in the Engineering Specification for Pressure Vessel Design and Fabrication. Supplementary requirements address pressure Plant Item fatigue analysis, positive material identification, lifting attachment design, equipment drop evaluation, fabrication tolerances, acceptable welding procedures for the Plant Items and appurtenances, welder qualifications and testing records, NDE inspections and records, and lifting, packaging, shipping, handling and storage requirements. These are adequate and acceptable design standards for the intended use of the Reboilers. Each Reboiler is vertical having an operating heat exchange area of 2582 ft^2 with 18,350,000 Btu/hr heat exchange duty. The Reboiler shell material is specified to be as SA 240 304 stainless steel (0.030% maximum carbon content, dual certified) and is hereafter referred to as 304. The tubes material is to be Hastelloy G-30 alloy and is hereafter referred to as G-30. The Reboiler shell side is to be 72" OD and the tube side is to be 72" x 72" x 180" overall dimensions. The size, configuration, and other design information for each Reboiler are specified in the Specification for Forced Circulation Vacuum Evaporator System and the Mechanical Data Sheets.

	Information Assessed	Source of Information	Assessment
Design	If a non-standard Plant Item is to be used, the design calculations demonstrate sound engineering principles of construction.	Specifications listed under Material Requisition, Drawings, and Mechanical Data Sheets listed above under References.	The FEP Waste Feed Evaporator Reboilers, FEP-RBLR-00001A/B are standard ASME Section VIII, Div. 1 vessels. The Mechanical Data Sheets require that the ASME Section VIII, Division 1 Plant Items be delivered after design, fabrication, inspection and testing with an ASME code stamp and that the Plant Items be nationally registered. Supplemental design information is provided by the reference documents listed in the Source of Information column for utilizing sound engineering principles of construction of the Plant Items.
	Plant Item has adequate strength, after consideration of the corrosion allowance, to withstand the operating pressure, operating temperature, and seismic loads.	Specifications listed under Material Requisition, Drawings, and Mechanical Data Sheets listed above under References; 24590-PTF-3YD-FEP-00001, Rev. 0, System Description for Waste Feed Evaporation Process (FEP), (Including SDCN No. 24590-PTF-3YN-FEP-00001).	The Mechanical Data Sheets identify the Reboilers' operating pressure and temperature ranges, the materials selected for the Plant Items, the corrosion allowance, and the Plant Item quality level and seismic category which determine the requirements for seismic design. The design specifications for the Plant Items require specific consideration of the operating pressures and temperatures and seismic loads in the design process. ASME Section VIII, Division 1 requires that the corrosion allowance thickness be excluded from the nominal wall thickness when evaluating the adequacy of components for the applicable loads at the end of life. The Engineering Specification for Seismic Qualification Criteria for Pressure Vessels adopts ASME Section VIII, Division 2 design rules to address seismic design and analysis of these Plant Items and ASME Section VIII, Division 1 for their supports. Detailed requirements for seismic load determination are furnished in the specification for Seismic Category I/II Equipment and Tanks. These codes and standards are adequate and appropriate for the design of the FEP Plant Items to withstand operating pressure and temperature loads and seismic loads for the specified design life.

	Information Assessed	Source of Information	Assessment
Foundation	Plant Item foundation will maintain the load of a full Plant Item.	Specifications listed under Material Requisition above under References; AISC Manual of Steel Construction, 9th Edition, American Institute of Steel Construction; 24590-WTP-DB-ENG-01-001, Rev. 1A, Basis of Design.	The Engineering Specification for Pressure Vessel Design and Fabrication requires the use of ASME BPV Code, Section VIII, Division 1 and AISC Manual of Steel Construction for the design of the Plant Items supports. This code ensures an adequate design for the Plant Item supports. Chapter 14 of the Basis of Design document requires that the Plant Item foundation design must be adequate to support the loads from full Plant Item.
	If in an area subject to flooding, the Plant Item is anchored.	Specifications listed under Material Requisition under References.	Buoyant forces on an empty Plant Item in a flooded room are mandatory standard design loads in the Specification for Pressure Vessel Design and Fabrication.
	Plant Item system will withstand the effects of frost heave.	24590-WTP-DB-ENG-01-001, Rev. 1A, Basis of Design.	The Basis of Design document requires that all structural foundations for outdoor equipment to extend a distance below grade that exceeds the 30" depth of the frost line. These Plant Items are located inside/interior of the building at (Elevation 0'-0" level with 8 ft thick foundation mat), therefore, the Plant Item foundation is not subject to frost heave.

	Information Assessed	Source of Information	Assessment
Waste Characteristics	Characteristics of the waste to be stored or treated have been identified (ignitable, reactive, toxic, specific gravity, vapor pressure, flash point, storage temperature)	Mechanical Data Sheets listed above under References; Plant Item Material Selection Data Sheet, 24590-PTF-N1D-FEP-P0008, Rev. 0, FEP-RBLR-00001A/B (PTF) Waste Feed Evaporator Reboilers; 24590-WTP-PSAR-ESH-01-002-02, Rev. 1a, Preliminary Safety Analysis Report to Support Construction Authorization: PT Facility Specific Information; Department of Ecology Permit # WA7890008967, *Dangerous Waste Portion of the Hanford Facility Resource Conservation and Recovery Act Permit for the Treatment, Storage, and Disposal of Dangerous Waste,* Chapter 10, and Attachment 51, "Hanford Tank Waste Treatment and Immobilization Plant."	The Mechanical Data Sheets present the waste specific gravity, storage temperatures and pressures. The Plant Item Material Selection Data Sheet addresses the pH range and chemical composition of the waste to select appropriate component materials and specify the corrosion allowance. Other waste characteristics that are hazardous, such as ignitability, reactivity, and toxicity are addressed by the Preliminary Safety Analysis Report for the PTF Building and in Part A of the Permit as an integral part of the design process. The FEP Plant Items provide primary containment of the waste during normal operations, abnormal operations, and during and after a Design Basis Earthquake.
	Plant Item is designed to store or treat the wastes with the characteristics defined above and any treatment reagents.	Plant Item Material Selection Data Sheet, 24590-PTF-N1D-FEP-P0008, Rev. 0, FEP-RBLR-00001A/B (PTF) Waste Feed Evaporator Reboilers; 24590-PTF-3YD-FEP-00001, Rev. 0, System Description for Waste Feed Evaporation Process (FEP), (Including SDCN No. 24590-PTF-3YN-FEP-00001).	The Plant Item Material Selection Data Sheet demonstrates that the Reboilers are designed to process the wastes discussed above. The System Description discusses normal and abnormal operations for the FEP Plant Items. Acid and water will be used for flushing/rinsing.
	The waste types are compatible with each other.	24590-PTF-3YD-FEP-00001, Rev. 0, System Description for Waste Feed Evaporation Process (FEP), (Including SDCN No. 24590-PTF-3YN-FEP-00001).	The System Description for the PTF FEP system does not describe any operations where incompatible wastes are mixed in these Plant Items for processing. These Reboilers as part of the evaporations process provide optimum conditions for waste processing via ultrafiltration and ion exchange.

	Information Assessed	Source of Information	Assessment
Corrosion Protection	Plant Item material and protective coatings ensure the Plant Item structure is adequately protected from the corrosive effects of the waste stream and external environments (expected to not leak or fail for the design life of the system)	Drawings and Mechanical Data Sheets listed above under References; Plant Item Material Selection Data Sheet, 24590-PTF-N1D-FEP-P0008, Rev. 0, FEP-RBLR-00001A/B (PTF) Waste Feed Evaporator Reboilers; 24590-PTF-3YD-FEP-00001, Rev. 0, System Description for Waste Feed Evaporation Process (FEP), (Including SDCN No. 24590-PTF-3YN-FEP-00001).	The Plant Item Material Selection Data Sheet shows that the FEP Waste Feed Evaporator Reboilers, FEP-RBLR-00001A/B normally operate at a pH of 13 and at a temperature of 142°F. The Reboilers are designed for 50/FV psig pressure and a temperature of 311°F. Other pertinent Plant Item operation and design information is provided in the Mechanical Data Sheets. Potential acid and water cleaning operations of the Plant Items were also considered. The material selected is 304 with no corrosion allowance for the shell and G-30 for the tubes with a corrosion allowance of 0.04 in. These Plant Items are located in cell (P-0123) at Elevation 0'-0". The cell is equipped with a sump/pump to pump out any leaks, therefore, the cell should remain dry during normal operations which will limit external corrosion of the Plant Item over the facility design life.
Corrosion Allowance	Corrosion allowance is adequate for the intended service life of the Plant Item.	Mechanical Data Sheets listed above under References; Plant Item Material Selection Data Sheet, 24590-PTF-N1D-FEP-P0008, Rev. 0, FEP-RBLR-00001A/B (PTF) Waste Feed Evaporator Reboilers.	The bases for the Reboilers material selection and corrosion allowance are furnished in the Plant Item Material Selection Data Sheet. Material selection of 304 for shell (no corrosion allowance) and G-30 for tubes with a corrosion allowance of 0.04 in. for a service life of 40 years is adequate and appropriate. The material selection and corrosion allowance are carried forward to the Mechanical Data Sheets.
Pressure Relief	Pressure controls (vents and relief valves) are adequately designed to ensure pressure relief if normal operating pressures in the Plant Item are exceeded.	Drawings listed above under References; 24590-PTF-3YD-FEP-00001, Rev. 0, System Description for Waste Feed Evaporation Process (FEP), (Including SDCN No. 24590-PTF-3YN-FEP-00001).	The FEP Waste Feed Evaporator Reboilers, FEP-RBLR-00001A/B, are vented at their high points which will prevent over-pressurization and mitigate hydrogen buildup.

Job No. 24590

Bechtel National, Inc.

SUPPLIER DOCUMENT STATUS

1. [X] **Work may proceed.**
2. [ ] **Revise and resubmit. Work may proceed subject to resolution of indicated comments.**
3. [ ] **Revise and resubmit. Work may not proceed.**
4. [ ] **Review not required. Work may proceed.**

Permission to proceed does not constitute acceptance or approval of design details, calculations, analyses, test methods, or materials developed or selected by the supplier and does not relieve supplier from full compliance with contractual obligations.

REVIEWED

G-321 Document Category N/A
[From Supplement A to G-321-E (E) or G-321-V (V), as applicable, or "N/A" if SSRS is used]

Supersedes BNI Document No. N/A Rev. _____
[When applicable]

Accepted by PC Pf Print Name [signature] Signature 3/31/04 Date

Released by N/A Print Name _____ Signature _____ Date
[When applicable]

416 GP&S 7-03

24590-CM-HC4-HXYG-00138-02-00021
REV. 00A

SUBCONTRACT SUBMITTAL

Best Available Copy

R10280853

IQRPE REVIEW
OF
PRETREATMENT FACILITY (PTF) TREATED LAW EVAPORATION PROCESS (TLP) ANCILLARY EQUIPMENT

"I, Tarlok S. Hundal, have reviewed, and certified a portion of the design of a new tank system or component located at the Hanford Waste Treatment Plant, owned/operated by Department of Energy, Office of River Protection, Richland, Washington. My duties were independent review of the current design for the Pretreatment Facility (PTF) Treated LAW Evaporation Process (TLP) Ancillary Equipment as required by the Dangerous Waste Regulations, namely, WAC 173-303-640(3) applicable paragraphs, i.e., (a) through (g)."

"I certify under penalty of law that I have personally examined and am familiar with the information submitted in this document and all attachments and that, based on my inquiry of those individuals immediately responsible for obtaining the information, I believe that the information is true, accurate, and complete. I am aware that there are significant penalties for submitting false information, including the possibility of fine and imprisonment."

The documentation reviewed indicates that the design intent fully satisfies the requirements of the WAC.

The attached review is 11 pages numbered 1 through 11.

TARLOK SINGH HUNDAL
STATE OF WASHINGTON
20213
REGISTERED
PROFESSIONAL ENGINEER

EXPIRES: 02/15/06

Signature

3/30/04
Date

24590-CM-HC4-HXYG-00138-02-00021, REV. 00A

STRUCTURAL INTEGRITY ASSESSMENT OF THE PRETREATMENT FACILITY (PTF) TREATED LAW EVAPORATION PROCESS (TLP) ANCILLARY EQUIPMENT

COGEMA-IA-046

REV. 0

Please note that source, special nuclear and byproduct materials, as defined in the Atomic Energy Act of 1954 (AEA), are regulated at the U.S. Department of Energy (DOE) facilities exclusively by DOE acting pursuant to its AEA authority. DOE asserts, that pursuant to the AEA, it has sole and exclusive responsibility and authority to regulate source, special nuclear, and byproduct materials at DOE-owned nuclear facilities. Information contained herein on radionuclides is provided for process description purposes only.

Scope	Scope of this Integrity Assessment	This Integrity Assessment addresses the Ancillary Equipment (piping, pipe supports, condensers, and their appurtenances) of the Treated LAW Evaporation Process (TLP) system in the Pretreatment Facility (PTF). They include the following plant items and components: 1. Ancillary Equipment associated with four vessels: Two TLP vessels (TLP-VSL-00009A/B) located in cell P-0117 and cell P-0117A, respectively, at grade (Elev. 0'-0"); one TCP vessel (TCP-VSL-00001); and one RDP vessel (RDP-VSL-00004). The ancillary equipment associated with these four vessels is shown on P&ID drawings 24590-PTF-M6-TLP-P00001, -P00005, -P00006, and –P00007. 2. Ancillary Equipment associated with one TLP Condensate Collection vessel (TLP-VSL-00002) and three TLP Condensers (TLP-COND-00001/2/3). The ancillary equipment associated with these four plant items is shown on P&ID drawing 24590-PTF-M6-TLP-P00002. 3. Ancillary Equipment associated with one TLP Separator (TLP-SEP-00001) and one TLP Reboiler (TLP-RBLR-00001). The ancillary equipment associated with these two plant items is shown on P&ID drawing 24590-PTF-M6-TLP-P00003. 4. Three TLP Condensers (TLP-COND-00001/2/3) located at Elevation 56'-0". <u>Note</u>: Additional ancillary equipment information associated with the above listed vessels and other plant components or items are located in various rooms/cells and at different floor elevations ranging from Elev. (-) 45'-0" to 56'-0" of the PTF. These plant items include, vessels, tanks, condensers, separators, reboilers, pumps, plant wash racks, PSA rack, plant vent headers, demisters, scrubbers, collection header overflows, etc., as shown on the drawings listed in the References below. Ancillary equipment located inside the TLP system vessels and plant items except above listed three condensers is addressed separately in the Integrity Assessments for these vessels and plant items.
Summary of Assessment		For each item of "Information Assessed" (i.e., Criteria) on the following pages, the items listed under "Source of Information" were reviewed and found to furnish adequate design controls and requirements to ensure the design intent fully satisfies the requirements of Washington Administrative Code, WAC-173-303-640, *Dangerous Waste Regulations* for Tank Systems.

References	Drawings, Mechanical Data Sheets, and Plant Item Material Selection Data Sheets	Drawings: 24590-PTF-P1-P01T-P0001, Rev. 2, Pretreatment Facility General Arrangement Plan at El. 0'-0"; 24590-PTF-P1-P01T-P0002, Rev. 1, Pretreatment Facility General Arrangement Plan at El. 28'-0"; 24590-PTF-P1-P01T-P0003, Rev. 0, Pretreatment Facility General Arrangement Plan at El. 56'-0"; 24590-PTF-P1-P01T-P0006, Rev. 1, Pretreatment Facility General Arrangement Plan at El. (-) 45'-0"; 24590-PTF-P1-P01T-P0010, Rev. 3, Pretreatment Facility General Arrangement Section D-D; 24590-PTF-P1-P01T-P0014, Rev. 5, Pretreatment Facility General Arrangement Sect. L-L and Sect. K-K; 24590-PTF-M6-TLP-P0001, Rev. 0, P&ID – PTF Treated LAW Evaporation Process System LAW SBS Condensate Receipt (TLP-VSL-00009A and 9B); 24590-PTF-M6-TLP-P0002, Rev. 0, P&ID – PTF Treated LAW Evaporation Process System Condensers & Condensate Collection TLP-VSL-00002; 24590-PTF-M6-TLP-P0003, Rev. 0, P&ID – PTF Treated LAW Evaporation Process System Separator TLP-SEP-00001; 24590-PTF-M6-TLP-P0005, Rev. 0, P&ID – PTF Treated LAW Evaporation Process System Utility Services PSA Rack; 24590-PTF-M6-TLP-P0006, Rev. 0, P&ID – PTF Treated LAW Evaporation Process System Utility Services PSA Rack; 24590-PTF-M6-TLP-P0007, Rev. 0, P&ID – PTF Treated LAW Evaporation Process System Utility Services Plant Wash Rack; 24590-PTF-M5-V17T-P0005, Rev. 0, Process Flow Diagram Treated LAW Evaporation System TLP. Mechanical Data Sheets: 24590PTF-MED-TLP-00001, Rev. 0, Treated LAW Evaporator Primary Condenser (TLP-COND-00001); 24590PTF-MED-TLP-00002, Rev. 0, Treated LAW Evaporator After-Condenser (TLP-COND-00002); 24590PTF-MED-TLP-00003, Rev. 0, Treated LAW Evaporator Inter-Condenser (TLP-COND-00003). Plant Item Material Selection Data Sheets: 24590-PTF-N1D-TLP-P0002, Rev. 0, Treated LAW Evaporator Primary Condenser (TLP-COND-0001); 24590-PTF-N1D-TLP-P0003, Rev. 0, Treated LAW Evaporator After-Condenser & Inter-Condenser (TLP-COND-00002/3).

References	Material Requisition, Specifications, and System Description	Material Requisition: 24590-QL-MRA-MEVV-00001, Rev. 2 (including Material Requisition Supplement No. S01 to Rev. 2 of the MR): The following Specifications with their appropriate number and revision are included in the above listed Material Requisition: Engineering Specification for Pressure Vessel Design and Fabrication; Engineering Specification for Seismic Qualification Criteria for Pressure Vessels; Specification for Shell and Tube Heat Exchangers Specification for Welding of Pressure Vessels, Heat Exchangers, and Boilers; General Specification for Supplier Quality Assurance Program Requirements; Specification for Positive Material Identification (PMI); General Specification for Packing, Shipping, Handling, and Storage; Engineering Specification for Pressure Vessel Fatigue Analysis; Engineering Specification for Seismic Qualification of Seismic Category I/II Equipment and Tanks; Engineering Specification for Structural Design Loads for Seismic Category III/IV Equipment and Tanks; Engineering Specification for Forced Circulation Vacuum Evaporator System. System Description: 24590-PTF-3YD-TLP-00001, Rev. 0, System Description for Treated LAW Evaporation Process (TLP), including System Description Change Notice (SDCN) No. 24590-PTF-3YN-TLP-00001.

	Information Assessed	Source of Information	Discussion
Design	Ancillary equipment design standards are appropriate and adequate for the equipment's intended use.	Drawings, Specifications, and Mechanical Data Sheets, listed above under References; 24590-WTP-DC-PS-01-001, Rev. 2, Pipe Stress Design Criteria Including "Pipe Stress Criteria" and "Span Method Criteria"; ASME B31.3 Code, Process Piping, 1996 Edition, American Society of Mechanical Engineers; ASME Boiler and Pressure Vessel Code, Section VIII, Division 1, Rules for Construction of Pressure Vessels; 24590-WTP-PSAR-ESH-01-002-02, Rev. 1a, Preliminary Safety Analysis Report (PSAR) to Support Construction Authorization: PT Facility Specific Information.	The Pipe Stress Design Criteria specifies ASME B31.3 as the design code for piping systems of the WTP. The P&ID drawings show the ancillary equipment piping and components as Seismic Category (SC-I or III) and Quality Level (QL-1 or Commercial Grade, or Non-Quality Related). The Mechanical Data Sheets that the TLP system condensers are be designed and fabricated to QL-1 and SC-III requirements. The condensers are be designed and fabricated in accordance with the requirements of ASME BPV Code, Section VIII, Division 1 as specified in the Engineering Specification for Pressure Vessel Design and Fabrication supplemented by the requirements in the Engineering Specification for Shell and Heat Exchangers. The Pipe Stress Design Criteria document provides a detailed discussion of seismic categories. Quality Levels are discussed in the PSAR. These codes and standards are acceptable and adequate for the design of the ancillary equipment piping and components for their intended service.
	If the ancillary equipment to be used is not built to a design standard, the design calculations demonstrate sound engineering principles of construction.	Mechanical Data Sheets and Specification listed above under References; ASME B31.3 Code, Process Piping, 1996 Edition, American Society of Mechanical Engineers; 24590-WTP-DC-PS-01-001, Rev. 2, Pipe Stress Design Criteria Including "Pipe Stress Criteria" and "Span Method Criteria."	The ancillary equipment is to be built to the design standards. The Pipe Stress Design Criteria specifies that piping is to be designed in accordance with ASME B31.3, Code. The Mechanical Data Sheets indicate that the TLP System condensers are to be designed and fabricated in accordance with the requirements of the ASME B&PV Code, Section VIII, Division 1 as specified in the Engineering Specification for Pressure Vessel Design and Fabrication supplemented by the requirements in the Engineering Specification for Shell and Tube Heat Exchangers.

	Information Assessed	Source of Information	Discussion
Design	Ancillary equipment has adequate strength at the end of its design life to withstand the operating pressure, operating temperature, thermal expansion, and seismic loads. Equipment is protected against physical damage and excessive stress due to settlement, vibration, expansion, or contraction.	Specifications listed above under References; 24590-WTP-DB-ENG-01-001, Rev 1A, Basis of Design; 24590-WTP-DC-PS-01-001, Rev. 2, Pipe Stress Design Criteria Including "Pipe Stress Criteria" and "Span Method Criteria"; 24590-WTP-PER-M-02-002, Rev. 1, Materials for Ancillary Equipment; ASME B31.3 Code, Process Piping, 1996 Edition, American Society of Mechanical Engineers; DOE-STD-1020-94, Natural Phenomenon Hazards Design Evaluation Criteria for Department of Energy Facilities (including Change Notice #1, January 1996); ASME BPV Code, Section III, Code Case N-411, Subsection NC, Appendix N, and Appendix F; ASME Boiler and Pressure Vessel Code, Section VIII, Division 2, Alternative Rules; UBC, Uniform Building Code, 1997 Edition.	The Basis of Design document specifies that mechanical equipment is to be designed for a nominal plant life of 40 years. The Materials for Ancillary Equipment document specifies that ancillary equipment downstream of a waste source vessel or miscellaneous treatment unit is to be constructed of the same or better material and with the same corrosion allowance as the source vessel or miscellaneous treatment unit. The Pipe Stress Design Criteria requires the use of the ASME B31.3 Code and DOE-STD-1020-94 Standard, for piping design. ASME B31.3 requires explicit consideration of operating pressure, operating temperature, thermal expansion and contraction, settlement, vibration, and corrosion allowance in the design of piping. ASME BPV Code, Section III, Code Case N-411, Subsection NC, Appendix N, and Appendix F, and the Uniform Building Code (UBC) are used to supplement the requirements of ASME B31.3 and DOE-STD-1020-94 for design as applicable to the appropriate Seismic Category of the ancillary equipment. Details of the seismic design methods are discussed in the Pipe Stress Design Criteria document. The Engineering Specification for Pressure Vessel Design and Fabrication addresses the same load cases and corrosion allowance in the design and fabrication process for the TLP Condensers. Supplementary seismic design criteria are specified in the Engineering Specification for Seismic Qualification Criteria for Pressure Vessels to provide for the condensers seismic design analysis. Additional details of the seismic analysis methodology (ASME B&PV Code, Section VIII, Division 2) are furnished in the Engineering Specification for Structural Design Loads for Seismic Category III/IV Equipment and Tanks. These are appropriate and adequate codes and standards to ensure that the ancillary equipment has adequate strength at the end of its design life to withstand all anticipated loads.

	Information Assessed	Source of Information	Discussion
Supports	Ancillary equipment supports are adequately designed.	Specifications listed above under References; 24590-WTP-DC-PS-01-002, Rev. 2, Pipe Support Design Criteria; ASME B31.3 Code, Process Piping, 1996 Edition, American Society of Mechanical Engineers; ASME Boiler and Pressure Vessel Code, Section III, Division 1, Rules for Construction of Nuclear Power Plant Components, 1995; ASME B&PV Code, Section VIII, Division 1, Rules for Construction of Pressure Vessels; 24590-WTP-PER-PS-02-001, Rev. 4, Ancillary Equipment Pipe Support Design; 24590-WTP-PL-PS-01-001, Rev. 1, Verification and Validation Test Plan for Bechtel's ME150 Pipe Support Family of Programs (PCFAPPS).	The Pipe Support Design Criteria document considers all loadings and loading combinations identified in ASME B31.3 and utilizes ASME BPV Code, Section III, Division 1, Subsection NF and Appendix F, to supplement the requirements of ASME B31.3 for seismic design of the applicable Seismic Category of the pipe supports. Supports for the TLP condensers are to be designed in accordance with the requirements in ASME B&PV Code, Section VIII, Division 1 as specified in the Engineering Specification for Pressure Vessel Design and Fabrication. Bounding load cases are passed to the pipe support designers from the results of the ancillary equipment piping stress analyses. Details of the seismic design methodology are discussed in the Pipe Support Design Criteria document. Examples of typical ancillary equipment supports are shown in the Ancillary Equipment Pipe Support Design document. Analysis is by manual calculation or approved computer programs that have been verified and validated. These are appropriate codes and standards for design of ancillary equipment supports for the TLP system. Ancillary equipment supports are to be designed in such a way that the heat transferred from supports to the building structure does not raise the building structure temperature to exceed 150°F for concrete and 200°F for steel.
Foundations	The system will withstand the effects of frost heave.	Drawings and System Description listed above under References; 24590-WTP-DC-ST-01-001, Rev. 2, Structural Design Criteria.	The TLP system ancillary equipment considered in this assessment is located inside the PTF. The Structural Design Criteria requires that all structural foundations shall extend into the surrounding soil below the 30" frost line, to preclude frost heave. The PTF facility structural foundation mat is 8 ft thick and all below the grade elevation, therefore, the ancillary equipment is not subject to the effects of frost heave.

	Information Assessed	Source of Information	Discussion
Connections	Seams and connections are adequately designed.	24590-WTP-DB-ENG-01-001, Rev 1A, Basis of Design; ASME B31.3 Code, Process Piping, 1996 Edition, American Society of Mechanical Engineers; 24590-WTP-DC-PS-01-001, Rev. 2, Pipe Stress Design Criteria Including "Pipe Stress Criteria" and "Span Method Criteria"; ASME BPV Code, Section IX, Welding and Brazing Qualifications; ASME B16.5, Piping Flanges and Flanged Fittings.	The Basis of Design specifies that in-cell piping that is non-maintainable will be fully welded. The Pipe Stress Design Criteria specifies the ASME B31.3 Process Piping design code for the piping systems. Welding is to be performed in accordance with the requirements of ASME B31.3 and the ASME BPV Code, Section IX. ASME B16.5 Code is specified for flange designs. These are appropriate codes and standards for the design and fabrication of the TLP System ancillary equipment.
Waste Characteristics	Characteristics of the waste to be stored or treated have been identified (ignitable, reactive, toxic, specific gravity, vapor pressure, flash point, temperature)	System Description listed above under References; 24590-WTP-PSAR-ESH-01-002-02, Rev. 1a, Preliminary Safety Analysis Report to Support Construction Authorization: PT Facility Specific Information; Department of Ecology Permit # WA7890008967, *Dangerous Waste Portion of the Hanford Facility Resource Conservation and Recovery Act Permit for the Treatment, Storage, and Disposal of Dangerous Waste,* Chapter 10, and Attachment 51, "Hanford Tank Waste Treatment and Immobilization Plant."	The ancillary equipment associated with the TLP system serves to transfers waste between numerous plant vessels, tanks, and other plant items in the PTF. The ancillary equipment considered in this assessment will handle wastes with the same characteristics as do the source vessels. The waste characteristics of source vessels have been appropriately assessed in separate integrity assessments for the associated vessels. The Preliminary Safety Analysis Report (PSAR) and Part A of the Permit, provide a summary of potential hazardous conditions associated with each Pretreatment Facility vessel and the design provisions that are to be used to provide adequate control of each hazard. The Pretreatment Vessel Vent Process System provides offgas control in the vessel/tank head spaces. Air in-bleed lines are provided for each vessel/tank for hydrogen dilution.

	Information Assessed	Source of Information	Discussion
Waste Characteristics	Ancillary equipment is designed to handle the wastes with the characteristics defined above and any treatment reagents.	System Description listed above under References; 24590-WTP-PER-M-02-002, Rev. 1, Materials for Ancillary Equipment.	The Materials for Ancillary Equipment document specifies that ancillary equipment materials that contact the waste are to be equal to or better than those of the upstream source vessels, unless the service seen in the downstream line warrants a different material, corrosion allowance, or other modification. The System Description states that compatible reagents are added to the TLP vessels during normal or non-routine operations.
Compatibility	The pH range of the waste, waste temperature and the corrosion behavior of the structural materials are adequately addressed. Ancillary equipment material and protective coatings ensure the ancillary equipment structure is adequately protected from the corrosive effects of the waste stream and external environments. The protection is sufficient to ensure the equipment will not leak or fail for the design life of the system.	Plant Item Material Selection Data Sheets listed above under References; 24590-WTP-DB-ENG-01-001, Rev. 1A, Basis of Design; 24590-WTP-PER-M-02-002, Rev. 1, Materials for Ancillary Equipment; 24590-WTP-3PS-NN00-T0001, Rev. 0, Engineering Specification for Hot and Anti-Sweat Thermal Insulation.	The Basis of Design document identifies a service design life of 40 years for the ancillary equipment. Detailed materials selection (corrosion) evaluations are conducted for each vessel in the PTF facility during process design to ensure a 40 year service life. The Materials for Ancillary Equipment document requires that the material selection and corrosion/erosion allowances for ancillary equipment in contact with the waste will be equal to or better than the material and corrosion allowance of the waste source vessel. The Plant Item Material Data Sheets provide the information used to select the materials for the TLP system condensers and the corrosion allowance. The condensers are to be fabricated using 316 stainless steel (maximum 0.030% Carbon, dual certified), which is hereinafter referred to as 316 stainless steel. The Thermal Insulation specification requires that all insulating materials used on the outside of ancillary equipment be pre-approved for use on austenitic stainless steel in accordance with applicable ASTM procedures and tests to preclude external corrosion of ancillary equipment. Therefore, the ancillary equipment will provide the expected design service life.

	Information Assessed	Source of Information	Discussion
Corrosion Allowance	Corrosion allowance is adequate for the intended service life of the ancillary equipment.	Plant Item Material Selection Data Sheets listed above under References; ASME B31.3 Code, Process Piping, 1996 Edition, American Society of Mechanical Engineers; 24590-WTP-PER-M-02-002, Rev. 1, Materials for Ancillary Equipment; 24590-WTP-DC-PS-01-001, Rev. 2, Pipe Stress Design Criteria Including "Pipe Stress Criteria" and "Span Method Criteria"; 24590-WTP-PER-PL-02-001, Rev. 5, Piping Material Class Description.	The Pipe Stress Design Criteria specifies ASME B31.3 as the design code for the WTP piping. Consideration of corrosion, including corrosion allowance, is a mandatory requirement of ASME B31.3. A required service life of 40 years is identified in the Basis of Design document for ancillary equipment. Detailed materials selection (corrosion) evaluations are conducted for each vessel in the PTF facility during process design to ensure a 40 year service life. The Materials for Ancillary Equipment document requires that the downstream ancillary equipment is to be constructed of equal or better materials, and with the same corrosion allowance as the source vessel except as noted herein. Corrosion/Erosion allowances are listed for each Piping Material Class in the Piping Material Class Description document. The Plant Item Material Data Sheets provide the information used to select the materials for the TLP system condensers and the corrosion allowance. The condensers are to be fabricated using 316 stainless steel with a corrosion allowance of 0.04 in. for a 40 year design life. These requirements are adequate to assure the ancillary equipment provides the intended service life.

	Information Assessed	Source of Information	Discussion
Strength	Pressure controls (vents and relief valves) are adequately designed to ensure pressure relief if normal operating pressures in the vessels are exceeded.	Drawings and Specifications listed above under References; ASME B31.3 Code, Process Piping, 1996 Edition, American Society of Mechanical Engineers; ASME B&PV Code, Section VIII, Division 1, Rules for Construction of Pressure Vessels; 24590-WTP-DC-PS-01-001, Rev. 2, Pipe Stress Design Criteria Including "Pipe Stress Criteria" and "Span Method Criteria"; 24590-WTP-PER-PL-02-001, Rev. 5, Piping Material Class Description.	The Pipe Stress Design Criteria document specifies ASME B31.3 as the design code for the WTP piping. ASME B31.3 requires provisions be made to safely contain or relieve any pressure to which the piping may be subjected. ASME B31.3 piping not protected by a pressure relieving device, or that can be isolated from a pressure reliving device must be designed for at least the highest pressure that can be developed. The Piping Material Class Description document provides bounding pressure and temperature limits for each of the piping material classes shown on the P&ID drawings. The Engineering Specification for Shell and Tube Heat Exchanges requires the design and fabrication of the TLP system condensers to meet ASME B&PV Code, Section VIII, Division 1 requirements. The Section VIII requirements for pressure relief are similar to those for ASME B31.3. Pressure relief provisions are adequate for the intended service.
	Maximum flows and any unusual operating stresses are identified	Drawings and Specifications listed above under References; ASME B31.3 Code, Process Piping, 1996 Edition, American Society of Mechanical Engineers; ASME B&PV Code, Section VIII, Division 1, Rules for Construction of Pressure Vessels; 24590-WTP-DC-PS-01-001, Rev. 2, Pipe Stress Design Criteria Including "Pipe Stress Criteria" and "Span Method Criteria"; 24590-WTP-PER-PL-02-001, Rev. 5, Piping Material Class Description.	The expected flow paths for the ancillary equipment are identified on the P&ID drawings. The Pipe Stress Design Criteria specifies ASME B31.3 Code for piping design. This code requires piping to be designed to the highest pressure that can be developed in a piping system ensuring that maximum operating stresses remain within code allowables. Piping material classes are shown on the P&IDs embedded in the item numbers for each ancillary equipment component. The Piping Material Class Description document lists the bounding pressure and temperature limits for each piping material class. The Engineering Specification for Shell and Tube Heat Exchanges requires the design and fabrication of the TLP system condensers to meet ASME B&PV Code, Section VIII, Division 1 requirements. The Section VIII requirements also require that maximum operating stresses remain within code allowables.

	Information Assessed	Source of Information	Discussion
Secondary Containment	Ancillary equipment is designed with secondary containment that is constructed of materials compatible with the waste and of sufficient strength to prevent failure (pressure gradients, waste, climatic conditions, daily operations), provided with a leak-detection system, and designed to drain and remove liquids.	Drawings and System Description listed above under References; 24590-WTP-PER-CSA-02-001, Rev. 4, Secondary Containment Design; 24590-WTP-DB-ENG-01-001, Rev. 1A, Basis of Design.	The Basis of Design document states that ancillary equipment shall be provided with a secondary containment. The ancillary equipment considered in this assessment is located in R5/C5 (process cell) areas within the PTF. These PTF room/cell areas are secondary containment concrete structures including sumps as shown on the general arrangement drawings. The cells and sumps are lined with stainless steel plates as detailed in the Secondary Containment Design document. The secondary containment structures are outside the scope of this integrity assessment and their assessment is conducted in a separate document. Each cell sump is equipped with a leak detection device and a liquid removal device such as steam ejector or electrical pump.

Job No. 24590

Bechtel National, Inc.

SUPPLIER DOCUMENT STATUS

1. ☒ **Work may proceed.**
2. ☐ **Revise and resubmit. Work may proceed subject to resolution of indicated comments.**
3. ☐ **Revise and resubmit. Work may not proceed.**
4. ☐ **Review not required. Work may proceed.**

Permission to proceed does not constitute acceptance or approval of design details, calculations, analyses, test methods, or materials developed or selected by the supplier and does not relieve supplier from full compliance with contractual obligations.

REVIEWED									

G-321 Document Category N/A
[From Supplement A to G-321-E (E) or G-321-V (V), as applicable, or "N/A" if SSRS is used]

Supersedes BNI Document No. N/A Rev. _____
[When applicable]

Accepted by D.C. Pfingst [illegible] 3/23/04
Print Name Signature Date

Released by N/A
[When applicable] Print Name Signature Date

416 GP&S 7-03

24590-CM-HC4-HXYG-00138-02-00022
REV. 00A

SUBCONTRACT SUBMITTAL

Best Available Copy

R10280854

IQRPE REVIEW
OF
PRETREATMENT FACILITY (PTF) ELEVATION 56'-0" MISCELLANEOUS TREATMENT UNITS SECONDARY CONTAINMENT

"I, John T. Baxter, have reviewed, and certified a portion of the design of a new tank system or component located at the Hanford Waste Treatment Plant, owned/operated by Department of Energy, Office of River Protection, Richland, Washington. My duties were independent review of the current design for the Pretreatment Facility (PTF) Elevation 56'-0" Miscellaneous Treatment Units Secondary Containment as required by the Dangerous Waste Regulations, namely, WAC 173-303-640(3) applicable paragraphs, i.e., (a) through (g)."

"I certify under penalty of law that I have personally examined and am familiar with the information submitted in this document and all attachments and that, based on my inquiry of those individuals immediately responsible for obtaining the information, I believe that the information is true, accurate, and complete. I am aware that there are significant penalties for submitting false information, including the possibility of fine and imprisonment."

The documentation reviewed indicates that the design intent fully satisfies the requirements of the WAC.

The attached review is 6 pages numbered 1 through 6.

JOHN T. BAXTER
STATE OF WASHINGTON
18978
REGISTERED
PROFESSIONAL ENGINEER

EXPIRES: 10/28/04

John T. Baxter
Signature

03/30/2004
Date

24590-CM-HC4-HXYG-00138-02-00022, REV. 00A

STRUCTURAL INTEGRITY ASSESSMENT OF THE PRETREATMENT FACILITY (PTF) ELEVATION 56'-0" MISCELLANEOUS TREATMENT UNITS SECONDARY CONTAINMENT

COGEMA-IA-047

REV. 0

Please note that source, special nuclear and byproduct materials, as defined in the Atomic Energy Act of 1954 (AEA), are regulated at the U.S. Department of Energy (DOE) facilities exclusively by DOE acting pursuant to its AEA authority. DOE asserts, that pursuant to the AEA, it has sole and exclusive responsibility and authority to regulate source, special nuclear, and byproduct materials at DOE-owned nuclear facilities. Information contained herein on radionuclides is provided for process description purposes only.

Scope	Scope of this Integrity Assessment	This integrity assessment addresses the Pretreatment Facility Secondary Containment at Elevation 56'-0". The specific rooms considered in this assessment are: P-0301, P-0302, P-0303, P-0303B, P-0304, P-0307, P-0311, P-0317, P-0320, P-0324, P-0325, P-0326, P-0328, P-0332B, P-0335A, P-0336 and PC0311.
References	Drawings	The drawings are the general arrangement plan at elevation 56'-0" and associated sections. 24590-PTF- P1- P01T- P0003, Rev. 0, PRETREATMENT FACILITY GENERAL ARRANGEMENT PLAN AT EL. 56'-0"; 24590-PTF- P1- P01T- P0008, Rev. 4, PRETREATMENT FACILITY GENERAL ARRANGEMENT SECT. B-B ; 24590-PTF- P1- P01T- P0009, Rev. 7, PRETREATMENT FACILITY GENERAL ARRANGEMENT SECT. C-C ; 24590-PTF- P1- P01T- P0010, Rev. 4, PRETREATMENT FACILITY GENERAL ARRANGEMENT SECT. D-D; 24590-PTF- P1- P01T- P0012, Rev. 5, PRETREATMENT FACILITY GENERAL ARRANGEMENT SECT. F-F AND SECT. G-G; 24590-PTF- P1- P01T- P0013, REV.4, PRETREATMENT FACILITY GENERAL ARRANGEMENT SECT. H-H AND SECT. J-J; 24590-PTF- P1- P01T- P0014, REV. 6, PRETREATMENT FACILITY GENERAL ARRANGEMENT SECT. K-K AND SECT. L-L; 24590-PTF- P1- P01T- P0015, REV. 6, PRETREATMENT FACILITY GENERAL ARRANGEMENT SECT. M-M AND SECT. N-N; 24590-PTF- P1- P01T- P0016, REV. 4, PRETREATMENT FACILITY GENERAL ARRANGEMENT SECT. P-P AND SECT. Q-Q; 24590-PTF- P1- P01T- P0017, REV. 4, PRETREATMENT FACILITY GENERAL ARRANGEMENT SECT. R-R

Summary of Assessment

For each item of "Information Assessed" (i.e., Criteria) on the following pages, the items listed under "Source of Information" were reviewed and found to furnish adequate design controls and requirements to assure the design intent fully satisfies the WAC requirements.

	Information Assessed	Source of Information	Assessment
Foundation Design	Description of subsurface conditions and soil bearing capacity are adequate.	24590-WTP-DC-ST-01-001, Rev. 2, Structural Design Criteria; 24590-BOF-3PS-CE01-T0001, Rev. 6, Engineering Specification for Excavation and Backfill; 24590-BOF-3PS-C000-T0001, Rev. 2, Engineering Specification for Material Testing Services	The Structural Design Criteria adequately presents design guidance for both mat and spread footings based on the geotechnical site investigation for the facility, (WTSC99-1036-42-17, Shannon & Wilson, 2000). Bearing capacity and settlement design parameters are furnished for the dense Hanford Upper and Lower Sand Units and Structural Fill. Use of the loose wind blown (dune) sands for foundations is precluded. The Excavation and Backfill Specification provides structural backfill requirements based on the geotechnical report and adequate current codes and standards for selection, placing, and compacting structural backfill including testing of candidate fill materials and completed backfills. The Specification for Material Testing Services provides current adequate codes and standards for testing of candidate structural fill materials and in-situ testing of structural fills as they are constructed. The codes and standards are consistent with those called out in the Excavation and Backfill Specification.
	Foundation design loads (including full tanks) and estimated settlement are adequately considered.	24590-WTP-DC-ST-01-001, Rev. 2, Structural Design Criteria; ASCE 7-98, Minimum Design Loads for Buildings and Other Structures	The Structural Design Criteria uses current adequate standards to define design loads and load combinations (ASCE 7-98, ACI 349-01 and ACI 318-99). Dead and Fluid loads are included in these loads and load combinations. Settlement design parameters are included in the Structural Design Criteria subsection on geotechnical design parameters and foundation design.
	Design calculation approach and design basis of footings with design standard references (e.g., ACI) are adequate.	24590-WTP-DC-ST-01-001, Rev. 2, Structural Design Criteria; ACI 349-01, Code Requirements for Nuclear Safety-Related Concrete Structures; ACI 318-99, Building Code Requirements for Structural Concrete	The Structural Design Criteria references current adequate design criteria for the design of concrete foundations and footings. ACI 349-01 is referenced for design of "safety" grade structures and ACI 318-99 is referenced for the strength design of "commercial grade" structures.

	Information Assessed	Source of Information	Assessment
Foundation Design	Foundation material is compatible with the soil.	24590-WTP-3PS-DB01-T0001, Rev. 6, Engineering Specification for Furnishing and Delivering Ready-Mix Concrete; 24590-BOF-3PS-C000-T0001, Rev. 2, Engineering Specification for Material Testing Services; 24590-WTP-DB-ENG-01-001, Rev. 1A, Basis of Design	The specification for Furnishing and Delivering Ready-Mix Concrete provides adequate current testing requirements for the selection of coarse and fine aggregates and the procurement of cementitious materials. Adequate test procedures are provided in the Material Testing Services specification for testing candidate aggregates for chemical reactivity. Instructions for mixing and delivering Ready-Mix Concrete are adequate and current. As noted in the Basis of Design document (section 4.7), the water table lies about 200 feet below the deepest foundations so there is little reason to expect compatibility problems between the concrete foundations and the site soils.
	Foundation will withstand the effects of frost heave	24590-WTP-DC-ST-01-001, Rev. 2, Structural Design Criteria	The Structural Design Criteria includes adequate provisions to preclude frost heave in the section addressing lateral earth pressure loads. All structural foundations are required to extend into the soil below the frost line to preclude frost heave. The frost line is 30 inches below finished grade. Therefore, the foundation will not be subjected to frost heave.
Seismic Design	Seismic considerations have been adequately addressed.	24590-WTP-PER-CSA-02-001, Rev. 4, Secondary Containment Design; 24590-WTP-DC-ST-01-001, Rev. 2, Structural Design Criteria; ANSI/AISC N690, Specification for the Design, Fabrication and Erection of Steel Safety-Related Structures for Nuclear Facilities; AISC MO16-89, Manual of Steel Construction - Allowable Stress Design, Ninth Edition; ASCE 4, Seismic Analysis of Safety Related Nuclear Structures and Commentary	The Secondary Containment Design document describes and provides references for the design methodology, materials, loads, and load combinations (including seismic loads) for the PTF Building secondary containment. The Structural Design Criteria provides detailed discipline specific codes and standards for the design of Seismic Category (SC-I/II) PTF secondary containment foundations and structures by the design engineers. ACI-349-01 and ACI 318-99 provide the design codes and load combinations for design of the secondary containment reinforced concrete foundations and structures. Structural steel components of the secondary containment structures and stainless steel liners are to be designed using ANSI/AISC N690 and the AISC Allowable Stress Design code. ASCE 4-98 is used for guidance on seismic analysis of safety-related nuclear structures. These codes and standards are adequate and acceptable for addressing seismic considerations.

	Information Assessed	Source of Information	Assessment
Compatibility	The stored waste is compatible with its Secondary Containment and leak detection hardware based on a detailed chemical and physical analysis of the wastes used and other information sources.	24590-WTP-DB-ENG-01-001, Rev. 1A, Basis of Design; 24590-WTP-PER-M-02-001, Rev. 3, Material Selections for Building Secondary Containment/Leak Detection; 24590-WTP-PER-CSA-02-001, Rev.4, Secondary Containment Design;	The Basis of Design states that cells and sumps are appropriately lined and any spills are removed and flushed within 24-hrs or as timely as possible. Secondary Containment liner design for cells at elevation 56'-0" requires special protective coatings only. Based on detailed analysis of the corrosive properties of expected waste process operations and evaluation of potential leak scenarios, the Material Selection report identifies appropriate and adequate corrosion resistant materials requirements for Secondary Containment liners. The Secondary Containment Design report provides adequate typical construction details for liners including tank anchorage details and special protective coatings to be used for Secondary Containment.
Strength	The design shows that the Secondary Containment has sufficient strength and thickness to prevent failure owing to pressure gradients, static head during a release, physical contact with the waste, climatic conditions, and the stress of daily operations (e.g., vehicular traffic).	Drawings listed above under References; 24590-WTP-PER-CSA-02-001, Rev. 4, Secondary Containment Design; 24590-WTP-PER-M-02-001, Rev. 3, Material Selections for Building Secondary Containment/Leak Detection	Because the Secondary Containment being considered is installed inside the Pretreatment Facility Building as shown on the drawings, climatic conditions and vehicular traffic are not applicable load cases. The Secondary Containment Design requirements document identifies adequate and appropriate design codes and standards and all applicable load cases (operational stresses) from site specific conditions that must be considered in the design. Specifications for protective coatings will be developed during the coating selection process. Factors to be considered during coating selection are adequately discussed in the Material Selections for Building Secondary Containment/Leak Detection document.
	The Secondary Containment system has sufficient strength in the presence of operational stresses from site-specific conditions (i.e., traffic, heavy equipment, precipitation, frost).	Drawings listed above under References; 24590-WTP-PER-CSA-02-001, Rev.4, Secondary Containment Design; 24590-WTP-PER-M-02-001, Rev. 3, Material Selections for Building Secondary Containment/Leak Detection	Because the Secondary Containment being considered is installed inside the Pretreatment Facility Building as shown on the drawings, traffic, heavy equipment, precipitation and frost are not applicable load cases. The Secondary Containment Design requirements document identifies adequate and appropriate design codes and standards and all applicable load cases (operational stresses) from site specific conditions that must be considered in the design. Specifications for protective coatings will be developed during the coating selection process. Factors to be considered during coating selection are adequately discussed in the Material Selections for Building Secondary Containment document.

	Information Assessed	Source of Information	Assessment
Foundation Integrity	The Secondary Containment is properly supported by a foundation or base in order to prevent failure from settlement, compression, or uplift, including the residual effects of installation.	Drawings listed above under References; 24590-WTP-DC-ST-01-001, Rev. 2, Structural Design Criteria; 24590-WTP-PER-CSA-02-001, Rev. 4, Secondary Containment Design	These conditions are fully addressed in the Structural Design Criteria and the Secondary Containment Design requirements documents. The design requirements and codes and standards specified are adequate to satisfy these performance goals. The procurement and construction specifications adequately provide for proper foundation construction and installation of the Secondary Containment. The General Arrangement Plan drawing and the associated Cross-Section drawings show the Secondary Containment boundaries.
	The placement, structural support, and type of material used for backfill around and below the Secondary Containment are appropriate.	24590-BOF-3PS-CE01-T0001, Rev. 6, Engineering Specification for Excavation and Backfill; 24590-BOF-3PS-C000-T0001, Rev. 2, Engineering Specification for Material Testing Services	The Excavation and Backfill and Material Testing specifications contain current adequate industry standards for selecting and testing fill materials, placing and compacting backfills, and testing not less than once each lift to assure adequate compaction. Requirements for testing and record keeping are current and adequate for both "safety grade" fills and "commercial grade" fills.
Infiltration	The design or operation (e.g., diking & curbing) prevents run-on or infiltration of precipitation into the Secondary Containment system unless the collection system has sufficient excess capacity (25 yr rainfall) to contain the run-on precipitation.	24590-WTP-DB-ENG-01-001, Rev. 1A, Basis of Design; Drawings listed above under References	This requirement is specified in the Basis of Design. Secondary containments being reviewed in this Integrity Assessment are all located inside the Pretreatment Facility Building where they are protected from precipitation as shown in the General Arrangement Plan and the associated Cross-Section drawings.
	The design includes an external moisture barrier or other means to prevent moisture from entering the cell.	24590-WTP-DB-ENG-01-001, Rev. 1A, Basis of Design; Drawings listed above under References	The Secondary Containments shown in the General Arrangement Plan at Elevation 56''-0" are inside the Pretreatment Facility Building which shields them from precipitation and surface water percolation. The ground water table is located about 200 feet below the floors of the cells at elevation 0'-0" as noted in the Basis of Design.

	Information Assessed	Source of Information	Assessment
Liner System	The containment area is free of cracks or gaps and the design discusses methods of their minimization.	24590-WTP-PER-CSA-02-001, Rev. 4, Secondary Containment Design; 24590-WTP-3PS-AFPS-TP006, Rev. 0, Engineering Specification for Field Applied Special Protective Coatings for Secondary Containment Areas	The Secondary Containment Design requirements document provides adequate and appropriate codes and standards for design of leak-tight liners. This report (CSA-02-001) includes appropriate details for design and installation of special protective coatings free of cracks and gaps. The Engineering Specification for Field Applied Special Protective Coatings provides detailed information on the tested and approved coating systems. This information includes directions for surface preparation, patching materials and application methods, and specific directions for application of multi-layer coatings.
	The design has considered the compatibility of the concrete liner or coatings and waste and presents information on coatings planning to be used from the manufacturer addressing compatibility with the stored waste. The lining or coating must prevent the waste from migrating into the concrete.	24590-WTP-PER-M-02-001, Rev. 3, Material Selections for Building Secondary Containment/Leak Detection; 24590-WTP-PER-CSA-02-001, Rev. 4, Secondary Containment Design; 24590-WTP-3PS-AFPS-TP006, Rev. 0, Engineering Specification for Field Applied Special Protective Coatings for Secondary Containment Areas	The Material Selections Study contains adequate and appropriate general information on the compatibility of planned Secondary Containment liners and special protective coatings with the waste. The Secondary Containment Design report provides adequate and appropriate standard details for design and installation of special protective coating liners that will prevent migration of the waste into the concrete. The Engineering Specification for Field Applied Special Protective Coatings provides detailed information on the tested and approved coating systems. This information includes directions for surface preparation, patching materials and application methods, and specific directions for application of multi-layer coatings.

Job No 24590

Bechtel National, Inc.

SUPPLIER DOCUMENT STATUS

1. [X] **Work may proceed.**
2. [ ] **Revise and resubmit. Work may proceed subject to resolution of indicated comments.**
3. [ ] **Revise and resubmit. Work may not proceed.**
4. [ ] **Review not required. Work may proceed.**

Permission to proceed does not constitute acceptance or approval of design details, calculations, analyses, test methods, or materials developed or selected by the supplier and does not relieve supplier from full compliance with contractual obligations.

REVIEWED									

G-321 Document Category N/A
[From Supplement A to G-321-E (E) or G-321-V (V), as applicable, or "N/A" if SSRS is used]

Supersedes BNI Document No. N/A Rev. _____
[When applicable]

Accepted by C. Flinger (Print Name) C. Flinger (Signature) 9/1/04 (Date)

Released by N/A (Print Name) _____ (Signature) _____ (Date)
[When applicable]

416 GP&S 7-03

24590-CM-HC4-HXYG-00138-02-00023

REV. 00A

~~PURCHASE ORDER~~ SUBMITTAL

SUBCONTRACT

AB 4-1-04

R10281334

COGEMA-IA-048, Rev. 0

IQRPE REVIEW - PRETREATMENT FACILITY (PTF) TREATED LAW EVAPORATION PROCESS (TLP) SYSTEM MISCELLANEOUS TREATMENT UNITS AND VESSELS

"I, John T. Baxter have reviewed, and certified a portion of the design of a new tank system or component located at the Hanford Waste Treatment Plant, owned/operated by Department of Energy, Office of River Protection, Richland, Washington. My duties were independent review of the current design for the Pretreatment Facility (PTF) Treated LAW Evaporation Process (TLP) System Miscellaneous Treatment Units and Vessels as required by The Dangerous Waste Regulations, namely, WAC 173-303-640(3) applicable paragraphs, i.e., (a) through (g)."

"I certify under penalty of law that I have personally examined and am familiar with the information submitted in this document and all attachments and that, based on my inquiry of those individuals immediately responsible for obtaining the information, I believe that the information is true, accurate, and complete. I am aware that there are significant penalties for submitting false information, including the possibility of fine and imprisonment."

The documentation reviewed indicate that the design intent fully satisfies the requirements of the WAC.

The attached review is eleven (11) pages numbered one (1) through eleven (11).

JOHN T. BAXTER
STATE OF WASHINGTON
18978
REGISTERED
PROFESSIONAL ENGINEER
EXPIRES: 10 / 28 / 04

John T. Baxter
Signature

04/01/2004
Date

24590-CM-HC4-HXYG-00138-02-00023, REV. 00A

STRUCTURAL INTEGRITY ASSESSMENT OF THE PRETREATMENT FACILITY (PTF) TREATED LAW EVAPORATION PROCESS (TLP) SYSTEM MISCELLANEOUS TREATMENT UNITS AND VESSELS

COGEMA-IA-048
Rev. 0

Please note that source, special nuclear and byproduct materials, as defined in the Atomic Energy Act of 1954 (AEA), are regulated at the U.S. Department of Energy (DOE) facilities exclusively by DOE acting pursuant to its AEA authority. DOE asserts, that pursuant to the AEA, it has sole and exclusive responsibility and authority to regulate source, special nuclear, and byproduct materials at DOE-owned nuclear facilities. Information contained herein on radionuclides is provided for process description purposes only.

Scope	Scope of this Integrity Assessment	The scope of this integrity assessment includes the Pretreatment Facility (PTF) Treated LAW Evaporation Process (TLP) System Miscellaneous Treatment Units (MTUs) and Vessels. The MTUs include: Treated LAW Evaporator Reboiler, TLP-RBLR-00001 and Treated LAW Evaporator Separator Vessel, TLP-SEP-00001. These MTUs are being purchased as part of a Material Requisition for vendor packaged process units titled "Evaporators (Forced Recirculation)". The Vessels are LAW SBS Condensate Receipt Vessels, TLP-VSL-00009A & TLP-VSL-00009B and Treated LAW Evaporator Condensate Vessel, TLP-VSL-00002. The primary function of the TLP System MTUs and vessels is to increase the concentration of Treated Low Activity Waste (LAW) feed prior to transfer to the LAW vitrification facility for glassification.
References	Material Requisitions, Drawings, Specifications and System Description	Material Requisition No. 24590-CM-MRB-MVA0-00001, Rev. 1, Pressure Vessels, Shop Fabricated Large (VXNW), MR Section 2 – Technical Specifications (Rev. 3, January 6, 2003); Material Requisition No. 24590-QL-MRA-MEVV-00001, Rev. 2, Evaporators (Forced Recirculation) QL-1, MR Section 2 – Technical Specifications (Rev. 0, May 2002); Material Requisition Supplement 24590-QL-MRA-MEVV-00001-S01 to MR No. 24590-QL-MRA-MEVV-00001, Rev. 2; 24590-PTF-P1-P01T-P0001, Rev. 3, Pretreatment General Arrangement Plan at EL. 0'-0"; 24590-PTF-M5-V17T-P0005, Rev. 0, Process Flow Diagram Treated LAW Evaporation System TLP; 24590-PTF-3PS-MEVV-T0001, Rev. 0, Engineering Specification for Forced Circulation Vacuum Evaporator System; 24590-PTF-3YD-TLP-00001, Rev. 0, System Description for Treated LAW Evaporation Process (TLP); System Description Change Notice (SDCN) No. 24590-PTF-3YN-TLP-00001 for System Description Number 24590-PTF-3YD-TLP-00001, Rev. 0;

References	Drawings, Mechanical Data Sheets and Material Selection Data Sheets	24590-PTF-MV-TLP-00001, Rev. 0, Equipment Assembly LAW SBS Condensate Receipt Vessel TLP-VSL-00009A; 24590-PTF-MV-TLP-00002, Rev. 0, Equipment Assembly LAW SBS Condensate Receipt Vessel TLP-VSL-00009B; Mechanical Data Sheet Shell and Tube Heat Exchanger 24590-PTF-MED-TLP-00004, Treated LAW Evaporator Reboiler TLP-RBLR-00001; Mechanical Data Sheet: Vessel 24590-PTF-MVD-TLP-00005, Rev. 0, Treated LAW Evaporator Separator Vessel TLP-SEP-00001; Mechanical Data Sheet: Vessel 24590-PTF-MVD-TLP-00004, Rev. 0, Treated LAW Evaporator CondensateVessel TLP-VSL-00002; Mechanical Data Sheet: Vessel 24590-PTF-MVD-TLP-00001, Rev. 0, LAW SBS Condensate Receipt Vessel TLP-VSL-00009A; Mechanical Data Sheet: Vessel 24590-PTF-MVD-TLP-00002, Rev. 0, LAW SBS Condensate Receipt Vessel TLP-VSL-00009B; Vessel/Tank Material Selection Data Sheet, 24590-PTF-N1D-TLP-P0006, Rev. 0, Treated LAW Evaporator Condensate Vessel TLP-VSL-00002 (PTF); Vessel/Tank Material Selection Data Sheet, 24590-PTF-N1D-TLP-P0001, Rev. 0, LAW SBS Condensate Receipt Vessels TLP-VSL-00009A&B (PTF); Plant Item Material Selection Data Sheet 24590-PTF-N1D-TLP-P0005, Rev. 0, Treated LAW Evaporator Separator Vessel TLP-SEP-00001 (PTF); Plant Item Material Selection Data Sheet 24590-PTF-N1D-TLP-P0011, Rev. 0, Treated LAW Evaporator Reboiler TLP-RBLR-00001 (PTF)

Summary of Assessment

For each item of "Information Assessed" (i.e., Criteria) on the following pages, the items listed under "Source of Information" were reviewed and found to furnish adequate design controls and requirements to assure the design intent fully satisfies the WAC requirements.

	Information Assessed	Source of Information	Discussion
Design	Plant item design standards are appropriate and adequate for the plant item's intended use.	Data Sheets for the MTUs listed above under References; 24590-PTF-3PS-MEVV-T0001, Rev. 0, Engineering Specification for Forced Circulation Vacuum Evaporator System; Specification Change Notice (SCN) No. 24590-PTF-3PN-MEVV-00001 for Specification No. 24590-PTF-3PS-MEVV-T00001, Rev. 0; 24590-WTP-3PS-MV00-T0001, Rev. 1, Engineering Specification for Pressure Vessel Design and Fabrication; 24590-WTP-3PS-MES0-T0001, Rev. 0, Engineering Specification for Shell and Tube Heat Exchangers; ASME Section VIII, Division 1, Rules for Construction of Pressure Vessels, American Society of Mechanical Engineers	The Engineering Specification for Forced Circulation Vacuum Evaporator System specifies that MTU TLP-SEP-00001 is to be designed in accordance with the Engineering Specification for Pressure Vessel Design and Fabrication which requires that the MTU and all MTU appurtenances are to be designed to ASME Section VIII, Division 1 rules. The reboiler (TLP-RBLR-00001) is to be designed to these same requirements supplemented by the requirements specified in the Engineering Specification for Shell and Tube Heat Exchangers. These design requirements are appropriate for these MTUs operating over the pressure and temperature ranges specified on the Data Sheets. Supplementary requirements are specified in the Engineering Specification for Pressure Vessel Design and Fabrication and the Specification for Shell and Tube Heat Exchangers.. These supplementary requirements address pressure vessel fatigue analysis, positive material identification, standard fabrication tolerances, acceptable welding procedures for the MTUs and appurtenances, welder qualifications and testing records, NDE inspections and records, quality assurance requirements, and packaging, shipping, handling and storage requirements. The general arrangement sketches for the TLP System MTUs and performance requirements are presented in the Engineering Specification for Forced Circulation Evaporator System. The SCN identifies that TLP-RBLR-00001 and TLP-SEP-00001 are upgraded to Quality Level (QL-1) and Seismic Category (SC-I) to improve their reliability. These are adequate and acceptable codes and standards for these MTUs.

	Information Assessed	Source of Information	Discussion
Design	If a non-standard plant item is to be used, the design calculations demonstrate sound engineering principles of construction.	24590-PTF-3PS-MEVV-T0001, Rev. 0, Engineering Specification for Forced Circulation Vacuum Evaporator System; 24590-WTP-3PS-MV00-T0001, Rev. 1, Engineering Specification for Pressure Vessel Design and Fabrication; 24590-WTP-3PS-MES0-T0001, Rev. 0, Engineering Specification for Shell and Tube Heat Exchangers	The Engineering Specification for Forced Circulation Vacuum Evaporator System requires that the ASME Section VIII, Division 1 MTUs be delivered after design, fabrication, inspection and testing with an ASME U stamp and that the MTUs be registered with the National Board. They are shop fabricated MTUs for mixed waste service in the Pretreatment Facility. As discussed in the item immediately above, the MTU design standards are appropriate and adequate for the MTUs' intended uses.
	Plant item has adequate strength, after consideration of the corrosion allowance, to withstand the operating pressure, operating temperature, and seismic loads.	Data Sheets for the MTUs listed above under References; 24590-WTP-3PS-MV00-T0001, Rev. 1, Engineering Specification for Pressure Vessel Design and Fabrication; 24590-WTP-3PS-MV00-T0002, Rev. 1, Engineering Specification for Seismic Qualification Criteria for Pressure Vessels; 24590-WTP-3PS-SS90-T0001, Rev. 0, Engineering Specification for Seismic Qualification of Seismic Category I/II Equipment and Tanks; ASME Section VIII, Division 2, Alternative Rules, American Society of Mechanical Engineers	The Engineering Specification for Pressure Vessel Design and Fabrication requires consideration of the operating pressures, temperatures, seismic loads, and corrosion allowance in the design process for the MTUs. Supplementary seismic design criteria from ASME Section VIII, Division 2 are specified in the Engineering Specification for Seismic Qualification Criteria for Pressure Vessels to provide for the MTUs seismic design analysis. The Mechanical Data Sheets identify each MTU's operating pressure and temperature ranges, the materials selected for each MTU, the corrosion allowance selected for each MTU, the quality levels for each MTU, and the requirements for seismic design of each MTU. The Mechanical Data Sheets indicate that MTUs TLP-RBLR-00001 and TLP-SEP-00001 are Quality Level (QL-1) and are to be analyzed as Seismic Category (SC-I) equipment using the methodology detailed in the Engineering Specification for Seismic Qualification of Seismic Category I/II Equipment and Tanks. These are appropriate requirements and criteria to ensure the MTUs have adequate strength to withstand all loads at their end of service life.

	Information Assessed	Source of Information	Discussion
Foundation	Plant item foundation will maintain the load of a full plant item.	Mechanical Data Sheets for the MTUs listed above under References; 24590-PTF-3PS-MEVV-T0001, Rev. 0, Engineering Specification for Forced Circulation Vacuum Evaporator System; 24590-WTP-3PS-MV00-TP001, Rev. 1, Engineering Specification for Pressure Vessel Design and Fabrication	The Engineering Specification for Forced Circulation Vacuum Evaporator System provides layout sketches for the MTUs and specifies use for the Engineering Specification for Pressure Vessel Design and Fabrication. Data Sheets for the MTUs show that the supports are to be 304 stainless steel (maximum 0.030% Carbon), dual certified, hereinafter referred to as 304L stainless steel. Support locations are shown in the layout sketches. The Engineering Specification for Pressure Vessel Design and Fabrication requirements provide for adequate MTU foundation designs.
	If in an area subject to flooding, the plant item is anchored.	24590-WTP-3PS-MV00-TP001, Rev. 1, Engineering Specification for Pressure Vessel Design and Fabrication	Buoyant forces of an empty vessel in a flooded room are a standard design load case in the specification for Pressure Vessel Design and Fabrication. This load case will be applied in the design where applicable.
Frost Heave	Plant item system will withstand the effects of frost heave.	24590-PTF-3PS-MEVV-T0001, Rev. 0, Engineering Specification for Forced Circulation Vacuum Evaporator System; 24590-WTP-DC-ST-01-001, Rev. 1, Structural Design Criteria	The TLP system layout sketches in the Engineering Specification for Forced Circulation Vacuum Evaporator System show that the MTUs are located in process cells and areas inside the PTF. The Structural Design Criteria requires that structural foundations extend into the surrounding soil below the frost line to preclude frost heave. The frost line is located 30" below finished grade. The PTF mat foundation is not subject to frost heave; therefore, the TLP MTUs will not be subject to frost heave.
Waste Characteristics	Characteristics of the waste to be stored or treated have been identified (ignitable, reactive, toxic, specific gravity, vapor pressure, flash point, storage temperature)	Data Sheets and Process Flow Diagram listed above under References; 24590-WTP-PSAR-ESH-01-002-02, Rev 1a, Preliminary Safety Analysis Report (PSAR) to Support Construction Authorization; PT Facility Specific Information; 24590-PTF-3PS-MEVV-T0001, Rev. 0, Engineering Specification for Forced Circulation Vacuum Evaporator System	The PSAR identifies the main function of the TLP system to be concentration of decontaminated treated LAW feed prior to transfer to the LAW vitrification facility for glassification. The process streams for the TLP evaporator system are listed in the Engineering Specification for Forced Circulation Vacuum Evaporator System. The primary safety function of the MTUs is to provide primary containment for the dangerous waste contents of the LAW feed. Each vessel is furnished with a grounding lug to control the discharge of static electricity. Both of these TLP MTUs use 304L stainless steel for the containment boundaries which is adequate for this service.

	Information Assessed	Source of Information	Discussion
Waste Characteristics	Plant item is designed to store or treat the wastes with the characteristics defined above and any treatment reagents.	24590-PTF-3PS-MEVV-T0001, Rev. 0, Engineering Specification for Forced Circulation Vacuum Evaporator System	The TLP system operations are discussed in the Engineering Specification for Forced Circulation Vacuum Evaporator System. This document identifies that the MTUs will be used for concentration of LAW feed only. No additional chemical reagents will be added to the MTUs contents for processing during normal operations.
	The waste types are compatible with each other.	24590-PTF-3PS-MEVV-T0001, Rev. 0, Engineering Specification for Forced Circulation Vacuum Evaporator System	The input and output process streams for the TLP system are discussed in the Engineering Specification for Forced Circulation Vacuum Evaporator System in some detail. Wastes entering this system are compatible with each other during normal operations.
Corrosion Protection	Plant item material and protective coatings ensure the plant item structure is adequately protected form the corrosive effects of the waste stream and external environments (expected to not leak or fail for the design life of the system)	24590-PTF-3PS-MEVV-T0001, Rev. 0, Engineering Specification for Forced Circulation Vacuum Evaporator System; Material Selection Data Sheets and Mechanical Data Sheets listed above under References	The Engineering Specification for Forced Circulation Vacuum Evaporator System provides descriptions of the TLP MTUs and their locations in the PTF hot cell, inaccessible process cells and process areas. This description includes the external environmental conditions in which the MTUs will operate. The MTUs have design service lives of 40 years because of limited access for maintenance. The Material Selection Data Sheets for these MTUs identify the chemical characteristics of the LAW feed, the expected operating temperatures, and the anticipated normal operations that will occur in the MTUs. Based on these parameters, 304L stainless steel was selected as an appropriate material choice with a recommended corrosion allowance of 0.04 in. for a 40 year service life for TLP-SEP-00001. No shell side corrosion allowance is specified for TLP-RBLR-00001. The TLP MTUs are adequately protected to provide the expected service life.

	Information Assessed	Source of Information	Discussion
Corrosion Allowance	Corrosion allowance is adequate for the intended service life of the plant item.	Material Selection Data Sheets listed above under References	The Material Selection Data Sheets for these TLP system MTUs identify the chemical characteristics of the LAW feed, the expected operating temperatures, and the anticipated normal operations that will occur in the MTUs. Based on these parameters, 304L stainless steel was selected as an appropriate material choice with a recommended corrosion allowance of 0.04 in. for a 40 year service life for TLP-SEP-00001. The same material was selected for the shell of TLP-RBLR-00001, except that no shell side corrosion allowance is required. The material N06030 (Hastelloy G-30) was selected for the tubes of TLP-RBLR-00001 with a corrosion allowance of 0.040 inch on the waste side of the tubes. Hastelloy G-30 is a high nickel-chrome alloy with excellent corrosion resistance.
Pressure Relief	Pressure controls (vents and relief valves) are adequately designed to ensure pressure relief if normal operating pressures in the plant item are exceeded.	Process Flow Diagram listed above under References	The process flow diagram shows that TLP-RBLR-00001 and TLP-SEP-00001 overflow to TLP-VSL-00002. TLP-VSL-00002 is provided with an overflow outlet to PWD-VSL-00033 located at elevation (-) 45'-0" in the PTF.

	Information Assessed	Source of Information	Discussion
Design	Vessel design standards are appropriate and adequate for the vessel's intended use.	Drawings, Material Requisitions and Mechanical Data Sheets listed above under References; 24590-WTP-3PS-MV00-T0001, Rev. 0, Engineering Specification for Pressure Vessel Design and Fabrication (TLP-VSL-00009A&B); 24590-WTP-3PS-MV00-T0001, Rev. 1, Engineering Specification for Pressure Vessel Design and Fabrication (TLP-VSL-00002); ASME Section VIII, Division 1, Rules for Construction of Pressure Vessels, American Society of Mechanical Engineers	The Material Requisitions require use of The Engineering Specification for Pressure Vessel Design and Fabrication for vessels TLP-VSL-00002 and TLP-VSL-00009A&B. This specification requires that the vessels and all vessel appurtenances are to be designed to ASME Section VIII, Division 1 rules. Additional supplementary requirements are specified in the specifications for Pressure Vessel Design and Fabrication. These supplementary requirements address pressure vessel fatigue analysis, positive material identification, standard fabrication tolerances, acceptable welding procedures for the vessel and appurtenances, welder qualifications and testing records, NDE inspections and records, quality assurance requirements, and packaging, shipping, handling and storage requirements. The Mechanical Data Sheets identify the TLP vessels as Quality Level (CM, Commercial Grade) and Seismic Category (SC-III) equipment. These are adequate and acceptable codes and standards for design and fabrication of these TLP system vessels.
	If a non-standard vessel is to be used, the design calculations demonstrate sound engineering principles of construction.	24590-WTP-3PS-MV00-T0001, Rev. 0, Engineering Specification for Pressure Vessel Design and Fabrication (TLP-VSL-00009A&B); 24590-WTP-3PS-MV00-T0001, Rev. 1, Engineering Specification for Pressure Vessel Design and Fabrication (TLP-VSL-00002)	The Engineering Specifications for Pressure Vessel Design and Fabrication require that the TLP system vessels TLP-VSL-00002 and TLP-VSL-00009A&B are to be designed and fabricated in accordance with the requirements of ASME Section VIII, Division 1. The vessels are to be delivered after design, fabrication, inspection and testing with an ASME code stamp and the vessels will be registered with the National Board. These are shop fabricated vessels for mixed waste service in the PTF. The vessel design standards are appropriate and adequate for the vessels' intended uses.

	Information Assessed	Source of Information	Discussion
Design	Vessel has adequate strength, after consideration of the corrosion allowance, to withstand the operating pressure, operating temperature, and seismic loads.	Drawings, Material Requisitions and Mechanical Data Sheets listed above under References; 24590-WTP-3PS-MV00-T0001, Rev. 0, Engineering Specification for Pressure Vessel Design and Fabrication (TLP-VSL-00009A&B); 24590-WTP-3PS-MV00-T0001, Rev. 1, Engineering Specification for Pressure Vessel Design and Fabrication (TLP-VSL-00002); 24590-WTP-3PS-MV00-T0002, Rev. 1, Engineering Specification for Seismic Qualification Criteria for Pressure Vessels; 24590-WTP-3PS-FB01-T0001, Rev. 1, Engineering Specification for Structural Design Loads for Seismic Category III & IV Equipment and Tanks; UBC, 1997, Uniform Building Code, International Conference of Building Officials	The Engineering Specification for Pressure Vessel Design and Fabrication requires that the TLP vessels are to be designed to ASME Section VIII, Division 1 rules. This code requires specific consideration of the operating pressures, temperatures, seismic loads, and corrosion allowance in the design process. Supplementary design criteria are specified in the Engineering Specifications for Seismic Qualification Criteria and Structural Design Loads for Seismic Category III & IV Equipment and Tanks to provide for the seismic design analysis. The Mechanical Data Sheets identify the operating pressure and temperature ranges for each vessel, the materials selected in the corrosion report, the corrosion allowance, and the requirements for seismic qualification in the design. The Mechanical Data Sheets indicate that vessels TLP-VSL-00002 and TLP-VSL-00009A&B are to be analyzed as Seismic Category (SC-III) vessels which requires use of the seismic design requirements in the 1997 UBC. These are appropriate codes and criteria to ensure the tanks have adequate strength at the end of their design lives.
Foundation	Vessel foundation will maintain the load of a full vessel.	Drawings listed above under References; 24590-PTF-3PS-MEVV-T0001, Rev. 0, Engineering Specification for Forced Circulation Vacuum Evaporator System; 24590-WTP-3PS-MV00-T0001, Rev. 0, Engineering Specification for Pressure Vessel Design and Fabrication (TLP-VSL-00009A&B); 24590-WTP-3PS-MV00-T0001, Rev. 1, Engineering Specification for Pressure Vessel Design and Fabrication (TLP-VSL-00002)	The Equipment Assembly drawings show the support arrangements for TLP-VSL-00009A&B. The LAW SBS Condensate Receipt Vessels are provided with cylindrical skirts and a ring beam to provide for bearing on concrete and anchorage. Sketches in the Engineering Specification for Forced Circulation Vacuum Evaporator System show that TLP-VSL-00002 is supported on lug feet located at mid-height of the shell. These lug feet are supported on the evaporator skid structural steel frame which is also part of the vendor package.. The Engineering Specifications for Pressure Vessel Design and Fabrication requirements assure adequate vessel foundation designs.
	If in an area subject to flooding, the vessel is anchored.	24590-WTP-3PS-MV00-T0001, Rev. 0, Engineering Specification for Pressure Vessel Design and Fabrication (TLP-VSL-00009A&B); 24590-WTP-3PS-MV00-T0001, Rev. 1, Engineering Specification for Pressure Vessel Design and Fabrication (TLP-VSL-00002)	Buoyant forces of an empty vessel in a flooded room are a mandatory standard design load case in the Engineering Specifications for Pressure Vessel Design and Fabrication.

	Information Assessed	Source of Information	Discussion
Frost Heave	Vessel system will withstand the effects of frost heave.	Drawings and System Description listed above under References 24590-WTP-DC-ST-01-001, Rev. 0, Structural Design Criteria (TLP-VSL-00009A&B); 24590-WTP-DC-ST-01-001, Rev. 1, Structural Design Criteria (TLP-VSL-00002)	The PTF General Arrangement Plan at elevation 0'-0" shows that vessels TLP-VSL-00002 and TLP-VLS-00009A&B are installed in inaccessible process cells. These cells are supported by the PTF mat foundation. The Structural Design Criterias require that all structural foundations extend into the surrounding soil below the frost line in order to preclude frost heave. The frost line is located 30 in. below finished grade. The PTF mat foundation is not subject to frost heave; therefore, the TLP system vessels will not be subject to frost heave.
Waste Characteristics	Characteristics of the waste to be stored or treated have been identified (ignitable, reactive, toxic, specific gravity, vapor pressure, flash point, storage temperature)	Drawings, Mechanical Data Sheets and System Description listed above under References;	The System Description identifies that TLP-VSL-00009A & B receive primarily condensate from the LAW vitrification submerged bed scrubbers (SBSs) in the LAW primary offgas treatment system. This condensate is normally adjusted to a pH of 12 by the addition of NaOH before it is recycled through the TLP evaporator system. These vessels are equipped with pulse jet mixers and passive air inlet lines for hydrogen control during normal and abnormal operations and during and after design level seismic events as shown on the Process Flow Diagram. TLP-VSL-00002 receives decontaminated condensate from the three TLP system condensers which has little chemical content. This vessel is provided with a passive air inlet line for hydrogen control, but is not equipped with pulse jet mixers. The vessels are furnished with grounding lugs to control the discharge of static electricity as shown on the drawings. All vessels are equipped with internal spray rings for decontamination.
	Vessel is designed to store or treat the wastes with the characteristics defined above and any treatment reagents.	Vessel/Tank Material Selection Data Sheets, Mechanical Data Sheets and System Description listed above under References	The Vessel/Tank Material Selection Data Sheet shows that the material selected for TLP-VSL-00009A & B takes into account the reagents added to the waste received in the tank. The material selected for the tanks primary containment boundary is UNS N08367, a 6% Mo stainless steel. 304 stainless steel (maximum 0.030% Carbon), dual certified is specified for the support skirt for the tank. This material is hereinafter described as 304L stainless steel. The Vessel/Tank Material Selection Data Sheet for TLP-VSL-00002 shows that 304L stainless steel was selected for the primary containment boundary for this vessel.

	Information Assessed	Source of Information	Discussion
Waste Characteristics	The waste types are compatible with each other.	System Description listed above under References	The TLP System Description document identifies that the primary liquids used in vessels TLP-VSL-00009A&B are LAW SBS condensates and other dilute wastes generated in LAW operations. When received, these waste are adjusted to pH 12 so they can be recycled through the TLP evaporator system. TLP-VSL-00002 receives decontaminated TLP system condensate which is also compatible with the TLP system waste feed. These wastes are compatible. No other wastes are used in these vessels.
Compatibility	Vessel material and protective coatings ensure the vessel structure is adequately protected form the corrosive effects of the waste stream and external environments (expected to not leak or fail for the design life of the system)	Vessel/Tank Material Selection Data Sheets, Mechanical Data Sheets and System Description listed above under References	The Vessel/Tank Material Selection Data Sheet shows that the material selected for TLP-VSL-00009A & B takes into account the acidic nature of the LAW SBS condensate received from the LAW facility and the reagents added to the waste received in the tank. The material selected for the tanks is UNS N08367, a 6% Mo stainless steel. The Vessel/Tank Material Selection Data Sheet for TLP-VSL-00002 shows that 304L stainless steel was selected for this vessel. These material selections are correctly carried forward to the vessels Mechanical Data Sheets. The materials selected are adequate to provide the required 40 year service life for these vessels.
Corrosion Allowance	Corrosion allowance is adequate for the intended service life of the vessel.	Vessel/Tank Material Selection Data Sheets, Drawings and Mechanical Data Sheets listed above under References	The Vessel/Tank Material Selection Data Sheet for TLP-VSL-00009A&B specifies a corrosion allowance of 0.040 inches for a 40 year design life based on selection of UNS N08367 (6% Mo) stainless steel for use in this waste environment. The Vessel/Tank Material Selection Data Sheet for TLP-VSL-00002 shows that 304L stainless steel was selected for this vessel with a corrosion allowance of 0.040 in. for a 40 year design life. These material selections and corrosion allowances assure an adequate service life for the vessels.
Pressure Controls	Pressure controls (vents and relief valves) are adequately designed to ensure pressure relief if normal operating pressures in the vessel are exceeded.	Drawings listed above under References	The Process Flow Diagram shows that vessels TLP-VSL-00002 and TLP-VSL-00009A&B overflow to vessel PWD-VSL-00033 located at elevation (-) 45'-0" in the PTF. The Equipment Assembly drawings show that the overflow lines are larger than any of the other liquid conveying lines entering the vessels and therefore have adequate flow capacity to preclude overpressure.

Job No. 24590

Bechtel National, Inc.

SUPPLIER DOCUMENT STATUS

1. [✓] **Work may proceed.**
2. [ ] **Revise and resubmit. Work may proceed subject to resolution of indicated comments.**
3. [ ] **Revise and resubmit. Work may not proceed.**
4. [ ] **Review not required. Work may proceed.**

Permission to proceed does not constitute acceptance or approval of design details, calculations, analyses, test methods, or materials developed or selected by the supplier and does not relieve supplier from full compliance with contractual obligations.

REVIEWED									

G-321 Document Category N/A
[From Supplement A to G-321-E (E) or G-321-V (V), as applicable, or "N/A" if SSRS is used]

Supersedes BNI Document No. N/A Rev. _____
[When applicable]

Accepted by E.M. HAN (Print Name) E.M. Han (Signature) 5/5/04 (Date)

Released by N/A (Print Name) _____ (Signature) _____ (Date)
[When applicable]

416 GP&S 7-03

24590-CM-HC4-HXYG-00138-02-00027
REV. 00A

SUBCONTRACT SUBMITTAL

Best Available Copy

R10309384

IQRPE REVIEW
OF
THE PRETREATMENT FACILITY (PTF) ELEVATION 0'-0" SPENT RESIN COLLECTION AND DEWATERING PROCESS – SYSTEM (RDP) VESSELS RDP-VSL-00002A/B/C

"I, Fred Porter, have reviewed, and certified a portion of the design of a new tank system or component located at the Hanford Waste Treatment Plant, owned/operated by Department of Energy, Office of River Protection, Richland, Washington. My duties were independent review of the current design for the Pretreatment Facility (PTF) Elevation 0'-0" Spent Resin Collection And Dewatering Process – System (RDP) Vessels RDP-VSL-00002A/B/C as required by the Dangerous Waste Regulations, namely, WAC 173-303-640(3) (applicable paragraphs (i.e., (a) through (g)."

"I certify under penalty of law that I have personally examined and am familiar with the information submitted in this document and all attachments and that, based on my inquiry of those individuals immediately responsible for obtaining the information, I believe that the information is true, accurate, and complete. I am aware that there are significant penalties for submitting false information, including the possibility of fine and imprisonment."

The documentation reviewed indicates that the design intent fully satisfies the requirements of the WAC.

The attached review is eight pages numbered 1 through 8.

FRED E. PORTER
STATE OF WASHINGTON
11588
REGISTERED
PROFESSIONAL ENGINEER
EXPIRES: 12-08-5

Signature

MAY 4, 2004
Date

24590-CM-HC4-HXXG-00138-02-00027, REV. 00A

STRUCTURAL INTEGRITY ASSESSMENT OF THE PRETREATMENT FACILITY (PTF) ELEVATION 0'-0" SPENT RESIN COLLECTION AND DEWATERING PROCESS – SYSTEM (RDP) VESSELS RDP-VSL-00002A/B/C

COGEMA-IA-053

REV. 0

Please note that source, special nuclear and byproduct materials, as defined in the Atomic Energy Act of 1954 (AEA), are regulated at the U.S. Department of Energy (DOE) facilities exclusively by DOE acting pursuant to its AEA authority. DOE asserts, that pursuant to the AEA, it has sole and exclusive responsibility and authority to regulate source, special nuclear, and byproduct materials at DOE-owned nuclear facilities. Information contained herein on radionuclides is provided for process description purposes only.

Scope	Scope of this Integrity Assessment	This integrity assessment addresses Pretreatment Facility (PTF) Spent Resin Collection and Dewatering Process System (RDP) Spent Resin Slurry Vessels, RDP-VSL-00002A / B / C located at Elevation 0'-0" in Room P-0112. The primary function of these RDP system vessels is to support the continual and uninterrupted operation of the Cesium (Cs) Ion Exchange Process Systems removing spent ion exchange (IX) resin from the IX columns, verifying the resin's suitability for disposal, and transferring the resin to the Radioactive Solid Waste Handling System (RWH). The function of Spent Resin Slurry Vessels RDP-VSL- 00002A / B / C is to, provide transport liquid to remove spent resin from the Cs IX columns, provide receipt and interim storage volume for spent IX resin slurry, and provide mixing and suspension point to facilitate slurry transport and representative sampling.
References	Material Requisitions, Material Requisition Supplements, Drawings, Mechanical Data Sheets, Plant Item Material Selection Data Sheets, System Description and System Description Change Notices	Material Requisition No: 24590-QL-MRC-MVA0-A0002, Rev. 0, Pressure Vessels, High Alloy or Clad, MR Section 2 – Technical Specifications (Rev. 4, April 10, 2003); Material Requisition Supplement No: 24590-QL-MRC-MVAO-A0002-S0001 (Rev. 0, February 10, 2004); Drawing: 24590-PTF-M5-V17T-P0020, Rev. 0, Process Flow Diagram Spent Resin Collection and Dewatering Process System RDP; Drawing: 24590-PTF-P1-P01T-P0001, Rev. 3, Pretreatment Facility General Arrangement Plan at EL. 0'-0"; Drawing: 24590-PTF-P1-P01T-P0010, Rev. 4, Pretreatment Facility General Arrangement Section D-D; Drawing: 24590-PTF-P1-P01T-P0015, Rev. 6, Pretreatment Facility General Arrangement Sect. M-M & N-N; Drawing: 24590-PTF-MV-RDP-P0001, Rev. 0, Equipment Assembly Spent Resin Slurry Vessel RDP-VSL-00002A; Drawing: 24590-PTF-MV-RDP-P0002, Rev. 0, Equipment Assembly Spent Resin Slurry Vessel RDP-VSL-00002B; Drawing: 24590-PTF-MV-RDP-P0003, Rev. 0, Equipment Assembly Spent Resin Slurry Vessel RDP-VSL-00002C

References	Material Requisitions, Material Requisition Supplements, Drawings, Mechanical Data Sheets, Plant Item Material Selection Data Sheets, System Description and System Description Change Notices	Mechanical Data Sheet: Vessel, 24590-PTF-MVD-RDP-00005, Rev. 1, Spent Resin Slurry Vessel RDP-VSL-00002A, Rev.0; Mechanical Data Sheet: Vessel, 24590-PTF-MVD-RDP-00006, Rev. 1, Spent Resin Slurry Vessel RDP-VSL-00002B, Rev.0; Mechanical Data Sheet: Vessel, 24590-PTF-MVD-RDP-00007, Rev. 1, Spent Resin Slurry Vessel RDP-VSL-00002C, Rev.0; Plant Item Material Selection Data Sheet: 24590-PTF-NID-RDP-P0001, Rev. 0, Spent Resin Slurry Vessels, RDP-VSL-00002A/B/C (PTF); System Description for Spent Resin Collection and Dewatering Process-System RDP: 24590-PTF-3YD-RDP-00001,Rev. 0; System Description Change Notice (SDCN) For System Description No. 24590-PTF-3YN-RDP-00001, Rev. 0;

Summary of Assessment

For each item of "Information Assessed" (i.e., Criteria) on the following pages, the items listed under "Source of Information" were reviewed and found to furnish adequate design controls and requirements to assure the design intent fully satisfies the WAC requirements.

	Information Assessed	Source of Information	Discussion
Design	Vessel design standards are appropriate and adequate for the vessel's intended use.	Drawings and Mechanical Data Sheets listed above under references; ASME Boiler & Pressure Vessel (B & PV) Code, Section VIII, Div. 1, Rules for Construction of Pressure Vessels; 24590-WTP-3PS-MV00-T0001, Rev. 1, Engineering Specification for Pressure Vessel Design and Fabrication	The Engineering Specification for Pressure Vessel Design and Fabrication requires that the Spent Resin Slurry Vessels (RDP-VSL-00002A / B / C) and all vessel appurtenances are to be designed to ASME Section VIII, Division 1 rules. These design requirements are appropriate for unfired pressure vessels operating with aqueous mixed waste solutions over the pressure and temperature ranges specified for these vessels. Supplementary requirements are specified in the Engineering Specification for Pressure Vessel Design and Fabrication. These supplementary requirements address pressure vessel fatigue analysis, positive material identification, standard fabrication tolerances, acceptable welding procedures for the vessel and appurtenances, welder qualifications and testing records, NDE inspections and records, quality assurance requirements, and packaging, shipping, handling and storage requirements. These are adequate and acceptable codes and standards for Quality Level (QL-1), Seismic Category (SC-I) vessels. The Spent Resin Slurry Vessels are vertical vessels with 12'-0"IDs. Vessel vertical lengths are approximately 14'-0" tangent to tangent and all of the vessels are supported on cylindrical skirts. Top and bottom are ASME Code 2:1 Elliptical heads with radii equal to the tank IDs. The vessel material wall thicknesses are: shell 3/4 in., heads 0.625 in., and support skirt 1/2 in. Materials for the shells, heads and appurtenances are to be 316 (max 0.030% C; dual certified) stainless steel. Dual certified 316 stainless steel meets the chemistry requirements of specification SA 240 316L and the mechanical requirements of specification SA 240 316. This material is hereinafter referred to as SA 240 316L stainless steel. The maximum operating volume per vessel is 12,688 gallons.

	Information Assessed	Source of Information	Discussion
Design	If a non-standard vessel is to be used, the design calculations demonstrate sound engineering principles of construction.	24590-WTP-3PS-MV00-T0001, Rev. 1, Engineering Specification for Pressure Vessel Design and Fabrication	The Engineering Specification for Pressure Vessel Design and Fabrication requires that the ASME Section VIII, Division 1 vessels (RDP-VSL-00002A / B / C) be delivered after design, fabrication, inspection and testing with an ASME U stamp and that the vessels be registered with the National Board. They are shop fabricated vessels for mixed waste service in the Pretreatment Facility. As discussed in the item immediately above, the vessel design standards are appropriate and adequate for the vessels' intended uses.
	Vessel has adequate strength, after consideration of the corrosion allowance, to withstand the operating pressure, operating temperature, and seismic loads.	Drawings and Mechanical Data Sheets listed above under References; 24590-WTP-3PS-MV00-T0001, Rev. 1, Engineering Specification for Pressure Vessel Design and Fabrication; 24590-WTP-3PS-MV00-T0002, Rev. 2, Engineering Specification for Seismic Qualification Criteria for Pressure Vessels; 24590-WTP-3PI-SS90-T0001, Rev. 0, Engineering Specification for Seismic Qualification of Seismic Category I/II Equipment and Tanks	The Engineering Specification for Pressure Vessel Design and Fabrication requires consideration of the operating pressures, temperatures, seismic loads, and corrosion allowance in the design process. Supplementary seismic design criteria are specified in the Engineering Specification for Seismic Qualification Criteria for Pressure Vessels to provide for the vessels seismic design analysis. The Mechanical Data Sheets identify each vessel's operating pressure and temperature ranges, the materials selected for each vessel, the corrosion allowance selected for each vessel, and the requirements for seismic design of each vessel. The Data Sheets indicate that vessels RDP-VSL-00002A / B / C are to be analyzed as Seismic Category 1 (SC-I), Quality Level 1 (QL-1), vessels which requires use of the seismic design analysis and acceptance requirements of ASME Section VIII, Division 2. Details of this analysis methodology are furnished in the Engineering Specification for Seismic Qualification of Seismic Category I/II Equipment and Tanks. The Equipment Assembly drawings specify minimum 3/4in. thickness for the vessel shells and 0.625 in. thickness for heads. These are appropriate requirements and criteria to ensure the vessels have adequate strength to withstand all loads at their end of service life.

	Information Assessed	Source of Information	Discussion
Foundation	Vessel foundation will maintain the load of a full vessel.	Drawings, Plant Item Material Selection Data Sheet and Mechanical Data Sheets listed above under References; 24590-WTP-3PS-MV00-T0001, Rev.1, Engineering Specification for Pressure Vessel Design and Fabrication	Cylindrical skirts are specified for each of the vessels with a 1/2 in. minimum thickness of SA 240 304L stainless steel as shown on the equipment assembly drawings and specified in the Plant Item Material Selection and Mechanical Data Sheets. This thickness is adequate to support the loads of full vessels. A ring beam is included at the base of each of the skirts to spread the vessel loads on the foundation rings and provide for anchor bolting. The Engineering Specification for Pressure Vessel Design and Fabrication requirements provide for adequate vessel foundation designs.
	If in an area subject to flooding, the vessel is anchored.	24590-WTP-3PS-MV00-T0001, Rev.1, Engineering Specification for Pressure Vessel Design and Fabrication	Buoyant forces of an empty vessel in a flooded room are a standard design load case in this specification for Pressure Vessel Design and Fabrication.
Frost Heave	Vessel system will withstand the effects of frost heave.	System Description and SDCN listed under References above; 24590-WTP-DC-ST-01-001, Rev. 2, Structural Design Criteria	The System Description identifies that vessels RDP-VSL-00002A / B / C are located in black cells in the PTF. The Structural Design Criteria requires that structural foundations extend into the surrounding soil below the frost line to preclude frost heave. The frost line is located 30" below finished grade. The PTF foundations are not subject to frost heave; therefore, the RDP vessels will not be subject to frost heave.

	Information Assessed	Source of Information	Discussion
Waste Characteristics	Characteristics of the waste to be stored or treated have been identified (ignitable, reactive, toxic, specific gravity, vapor pressure, flash point, storage temperature)	Mechanical Data Sheets, Plant Item Material Selection Data Sheet, and System Description and SDCN listed above under References; 24590-WTP-PER-PR-03-001, Rev. 1, Prevention of Hydrogen Accumulation in WTP Tank Systems and Miscellaneous Treatment Unit Systems; 24590-WTP-PER-PR-03-002, Rev. 1, Toxic Vapors and Emissions from WTP Tank Systems and Miscellaneous Treatment Unit Systems	The System Description states that the primary function of the RDP vessels (RDP-VSL-00002A/ B / C) is to remove and store spent IX resin from the Cesium Ion Exchange Process system while the resin suitability for disposal is tested. When disposal is approved, the resin slurry is transferred to the Radioactive Solid Waste Handling System for disposal. The System Description discusses the main functions for the RDP vessels as waste containment, offgas confinement, and hydrogen control. Normal design and operating conditions and waste characteristics (chemistry) are listed for vessels RDP-VSL- 00002A / B / C in the Mechanical Data Sheets and in the Plant Item Material Selection Data Sheet. The Toxic Vapors and Emissions from WTP Tank Systems and Miscellaneous Treatment Unit Systems document provides a summary of the Vessel equipment design features that provide for confinement and treatment of acutely or chronically toxic vapors and emissions during normal operations, abnormal operations, and during and after a design basis seismic event. Similarly, the Prevention of Hydrogen Accumulation in WTP Tank Systems and Miscellaneous Treatment Unit Systems document indicates that flammable or explosive concentrations of hydrogen are a potential hazard in the RDP vessels' head spaces. During normal and abnormal operations, hydrogen control in the RDP vessels is dependent on availability of the Pulse Jet Mixers to maintain the solids in suspension to prevent potential hydrogen accumulation in resin layers inside the vessels. The Pretreatment Vessel Vent Process System provides for headspace purge during normal and abnormal operations. A backup forced purge air ventilation system provides for hydrogen control in the RDP vessels during post - design basis seismic event conditions as discussed in the Prevention of Hydrogen Accumulation document. Each vessel is furnished with a grounding lug to control the discharge of static electricity.

	Information Assessed	Source of Information	Discussion
Compatibility	Vessel is designed to store or treat the wastes with the characteristics defined above and any treatment reagents.	Mechanical Data Sheets, Plant Item Material Selection Data Sheet, System Description and SDCN listed above under reference.	As noted in the entry above, vessels RDP-VSL-00002A / B / C are designed to contain the waste they receive. The RDP System Description document identifies that the vessels will be used to provide mixing and suspension point to facilitate slurry transport and representative sampling. No additional chemical reagents will be added to the vessels' contents for processing during normal operations as discussed in the System Description. The Plant Item Material Selection Data Sheet provides a listing of waste chemistry for normal operations.
	The waste types are compatible with each other.	System Description and SDCN listed above under References	The primary material handled in vessels RDP-VSL-00002A / B / C is spent IX resin from the Cesium Ion Exchange Process in a slightly caustic transport fluid with a pH of about 13. All wastes handled in these vessels are of similar composition.
Corrosion	Vessel material and protective coatings ensure the vessel structure is adequately protected form the corrosive effects of the waste stream and external environments (expected to not leak or fail for the design life of the system)	Drawings, Mechanical Data Sheets, Plant Item Material Selection Data Sheet, System Description and SDCN listed above under References	The RDP system description identifies that vessels RDP-VSL-00002A / B / C will be located in black cells at elevation 0 feet in the PTF. They have design service lives of 40 years because there will not be access for maintenance. The Plant Item Material Selection Data Sheet for these vessels identifies the chemical characteristics of the spent IX resin from the Cesium Ion Exchange Process and the slightly caustic transport fluid. Based on these parameters, SA 240 316L stainless steel was selected as an appropriate material choice for a 40 year service life for these vessels.
Corrosion Allowance	Corrosion allowance is adequate for the intended service life of the vessel.	Drawings, Mechanical Data Sheets, and Plant Item Material Selection Data Sheet listed above under References	The Mechanical Data Sheets and the Plant Item Material Selection Data Sheet specifies a uniform corrosion allowance of 0.040 inches for a 40 year vessel life which is adequate for SA 240 316L stainless steel in this waste environment. The materials chosen, welding processes selected, surface preparation, and preservice inspections are appropriate for this waste service.

	Information Assessed	Source of Information	Discussion
Pressure Relief	Pressure controls (vents and relief valves) are adequately designed to ensure pressure relief if normal operating pressures in the vessel are exceeded.	Drawings, and System Description and SDCN listed above under References	All of the RDP vessels have unrestricted overflow lines as shown on the Process Flow Diagrams that are routed to PWD-VSL-00033 which is located at a lower elevation in the PTF. The System Description of the RDP processes indicates that all overflow lines are sized to handle the largest possible flow rates into each of the vessels. Nozzle sizes on the Equipment Assembly drawings are consistent with this requirement.

Job No. 24590

Bechtel National, Inc.

SUPPLIER DOCUMENT STATUS

1. [✓] **Work may proceed.**
2. [ ] **Revise and resubmit. Work may proceed subject to resolution of indicated comments.**
3. [ ] **Revise and resubmit. Work may not proceed.**
4. [ ] **Review not required. Work may proceed.**

Permission to proceed does not constitute acceptance or approval of design details, calculations, analyses, test methods, or materials developed or selected by the supplier and does not relieve supplier from full compliance with contractual obligations.

REVIEWED										

G-321 Document Category N/A
[From Supplement A to G-321-E (E) or G-321-V (V), as applicable, or "N/A" if SSRS is used]

Supersedes BNI Document No. N/A Rev. _____
[When applicable]

	Print Name	Signature	Date
Accepted by	E.M. HAN	EMHan	5/6/04
Released by [When applicable]	N/A		

416 GP&S 7-03

24590-CM-HC4-HXYG-00138-02-00028
REV. 00A

SUBCONTRACT SUBMITTAL

R10309652

COGEMA-IA-054, Rev. 0

IQRPE REVIEW –
PRETREATMENT FACILITY (PTF) ELEVATION 0'-0" ION EXCHANGE SPENT RESIN COLLECTION AND DEWATERING PROCESS (RDP) ANCILLARY EQUIPMENT

"I, Douglas W. Hendrickson, have reviewed, and certified a portion of the design of a new tank system or component located at the Hanford Waste Treatment Plant, owned/operated by Department of Energy, Office of River Protection, Richland, Washington. My duties were independent review of the current design for the Pretreatment Facility (PTF) Elevation 0'-0" Ion Exchange Spent Resin Collection And Dewatering Process (RDP) Ancillary Equipment as required by the Dangerous Waste Regulations, namely, WAC 173-303-640(3) applicable paragraphs, i.e., (a) through (g)."

"I certify under penalty of law that I have personally examined and am familiar with the information submitted in this document and all attachments and that, based on my inquiry of those individuals immediately responsible for obtaining the information, I believe that the information is true, accurate, and complete. I am aware that there are significant penalties for submitting false information, including the possibility of fine and imprisonment."

The documentation reviewed indicate that the design intent fully satisfies the requirements of the WAC.

The attached review is ten (10) pages numbered one (1) through ten (10).

DOUGLAS W. HENDRICKSON
STATE OF WASHINGTON
33907
REGISTERED
PROFESSIONAL ENGINEER
5 May 2004

EXPIRES 10 June 2005

Signature P.E. Date 5 May 2004

24590-CM-HC4-HXYG-00138-02-00028, REV. 00A

STRUCTURAL INTEGRITY ASSESSMENT OF THE PRETREATMENT FACILITY (PTF) ELEVATION 0'-0" ION EXCHANGE SPENT RESIN COLLECTION AND DEWATERING PROCESS (RDP) ANCILLARY EQUIPMENT

COGEMA-IA-054

REV. 0

Please note that source, special nuclear and byproduct materials, as defined in the Atomic Energy Act of 1954 (AEA), are regulated at the U.S. Department of Energy (DOE) facilities exclusively by DOE acting pursuant to its AEA authority. DOE asserts, that pursuant to the AEA, it has sole and exclusive responsibility and authority to regulate source, special nuclear, and byproduct materials at DOE-owned nuclear facilities. Information contained herein on radionuclides is provided for process description purposes only.

Scope	Scope of this Integrity Assessment	This integrity assessment includes: a. Ancillary equipment associated with the PTF Ion Exchange Spent Resin Collection & Dewatering Process (Q) and Vessels RDP-VSL-00002A/B/C, as shown on drawing 24590-PTF-M6-RDP-P0001, Rev. 0 b. Ancillary equipment associated with the PTF Ion Exchange Spent Resin Collection and Dewatering as shown on drawing 24590-PTF-M6-RDP-P0002, Rev. 0 c. Ancillary equipment associated with the PTF Ion Exchange Spent Resin Collection & Dewatering Utility Systems - PSA Rack as shown on drawing 24590-PTF-M6-RDP-P0006, Rev. 0
References	Drawings, System Description and System Description Change Notice, PSAR	24590-PTF-3YD-RDP-00001, Rev. 0, System Description for Spent Resin Collection and Dewatering Process - System RDP; 24590-PTF-3YN-RDP-00001, System Description Change Notice (SCDN) for System Description Number 24590-PTF-3YD-RDP-00001, Rev. 0; 24590-PTF-M5-V17T-P0020, Rev. 0, Process Flow Diagram Spent Resin Collection and Dewatering Process System RDP; 24590-PTF-M6-RDP-P0001, Rev. 0, P&ID – PTF Ion Exchange Spent Resin Collection & Dewatering Process (Q); 24590-PTF-M6-RDP-P0002, Rev. 0, P&ID – PTF Ion Exchange Spent Resin Collection and Dewatering; 24590-PTF-M6-RDP-P0006, Rev. 0, P&ID – PTF Ion Exchange Spent Resin Collection & Dewatering Utility Systems - PSA Rack; 24590-PTF-P1-P01T-P0001, Rev. 3, Pretreatment Facility General Arrangement Plan @ EL. 0'-0"; 24590-WTP-PSAR-ESH-01-002-02, Rev. 1A, Preliminary Safety Analysis Report (PSAR) to Support Construction Authorization; PT Facility Specific Information
References	Plant Item Material Selection Data Sheets, Material Requisition and Technical Specification	Plant Item Material Selection Data Sheet, 24590-PTF-N1D-RPD-00001, Rev. 0, RDP-VSL-00002A/B/C (PTF) Spent Resin Slurry Vessels; 24590-CM-MRA-MWDO-00005, Rev. 1, Material Requisition – RDP Spent Resin Dewatering Equipment Package; 24590-PTF-3PS-MWD0-T0003, Rev. 0, Engineering Specification for RDP Spent Resin Dewatering Equipment Package

Summary of Assessment

For each item of "Information Assessed" (i.e., Criteria) on the following pages, the items listed under "Source of Information" were reviewed and found to furnish adequate design controls and requirements to assure the design intent fully satisfies the WAC requirements.

Design	Ancillary equipment design standards are appropriate and adequate for the equipment's intended use.	Drawings and technical specification listed above under References; 24590-WTP-DC-PS-01-001, Rev 2, Pipe Stress Design Criteria including "Pipe Stress Criteria" and "Span Method Criteria"; ASME B31.3 Code, Process Piping, 1996 Edition, American Society of Mechanical Engineers; 24590-WTP-PSAR-ESH-01-002-02, Rev. 1A, Preliminary Safety Analysis Report (PSAR) to Support Construction Authorization; PT Facility Specific Information	The Pipe Stress Design Criteria document identifies ASME B31.3 as the design code for piping systems of the WTP. Seismic Categories and Quality Levels vary among the ancillary equipment components. For example the radar guide tubes shown on P&ID drawing no. 24590-PTF-M6-RDP-P0001 are Seismic Category (SC-II) and Quality Level (QL-2), while the Spent Resin Slurry Vessel ventilation header on this drawing and 24590-PTF-M6-RDP-P0006 is SC-I and QL-1 to ensure continued function during normal operations, abnormal operations, and during and after a Design Basis Earthquake due to the potential of hydrogen accumulation. Hydrogen mitigation portions of the ancillary equipment are SDC and will be SC-I and QL-1, including the vessel vent line and overflow line nozzle. Most of the ancillary equipment beyond the vessel or the first jumper from the vessels are Seismic Category (SC-II) and Quality Level (QL-2) as noted for example on P&ID drawing no. 24590-PTF-M6-RDP-P0001. The dewatering system vendor package is designed as SC-III as shown upon 24590-PTF-M6-RDP-P0002 but interfaces with the SC-I ventilation header, SC-II slurry transfer lines, and SC-IV cooling water lines. The Seismic Categories are explained in detail in the Pipe Stress Design Criteria document. Quality Levels are discussed in the PSAR. These codes and standards are acceptable and adequate for the design of the ancillary equipment for the intended service.

	If the ancillary equipment to be used is not built to a design standard, the design calculations demonstrate sound engineering principles of construction.	24590-WTP-DC-PS-01-001, Rev 2, Pipe Stress Design Criteria including "Pipe Stress Criteria" and "Span Method Criteria"; 24590-WTP-3PS-PF00-T0001, Rev. 1, Engineering Specification for Process Jumper Fabrication for PT and HLW.	The ancillary equipment is built to design and fabrication standards. The Pipe Stress Design Criteria document specifies that piping is to be designed in accordance with ASME B31.3. Jumpers are to be designed and fabricated in accord with ASME B31.3 as well as structural welding codes of AWS D1.1 and D1.6 subject to ASME B&PV Code Section IX welding and brazing certification and Section V non-destructive examination.
Design	Ancillary equipment has adequate strength at the end of its design life to withstand the operating pressure, operating temperature, thermal expansion, and seismic loads. Equipment is protected against physical damage and excessive stress due to settlement, vibration, expansion, or contraction.	24590-WTP-DC-PS-01-001, Rev 2, Pipe Stress Design Criteria including "Pipe Stress Criteria" and "Span Method Criteria"; Uniform Building Code (UBC), 1997 Edition, International Conference of Building Officials; ASME Boiler and Pressure Vessel Code, Section III, Rules for Construction of Nuclear Facility Components, Division 1, Subsection NC, Appendix N and Appendix F, 1995; 24590-WTP-VV-PS-01-001, Rev. 2, Verification and Validation Report for ME101, Linear Elastic Analysis of Piping, Version N8	The Pipe Stress Design Criteria document requires the use of the ASME B31.3 Code for piping design. ASME B31.3 requires explicit consideration of many loadings including operating pressure, operating temperature, thermal expansion/contraction, settlement, vibration, and corrosion allowance in the design of piping. Elements of the ASME B&PV Code, Section III, Division 1, Subsection NC, Appendix N and Appendix F are used to supplement the requirements of ASME B31.3 for seismic design of SC-I/SC-II piping. ASME B&PV Code, Section III, Division 1, Subsection NC and Appendix F, and the Uniform Building Code (UBC) are used to supplement the requirements of ASME B31.3 for seismic design of SC-III/SC-IV piping for this ancillary equipment. Details of the seismic design methods are discussed in the Pipe Stress Design Criteria document. Design is by hand calculations and computer codes that have been tested and approved as discussed in the Verification and Validation Report for ME101, Linear Elastic Analysis of Piping, Version N8. These are adequate and appropriate codes and standards to ensure that the ancillary equipment will have adequate strength at end of design life to withstand all anticipated loadings.

Supports	Ancillary equipment supports are adequately designed.	Drawings - see references above; 24590-WTP-DC-PS-01-002, Rev 2, Pipe Support Design Criteria; 24590-WTP-PER-PS-02-001, Rev. 4, Ancillary Equipment Pipe Support Design; ASME B31.3 Code, Process Piping, 1996 Edition, American Society of Mechanical Engineers; ASME Boiler and Pressure Vessel Code, Section III, Rules for Construction of Nuclear Facility Components, Division 1, Subsection NF and Appendix F, 1995; 24590-WTP-PL-PS-01-001, Rev 1, Verification and Validation Test Plan for Bechtel's ME150 Pipe Support Family of Programs (PCFAPPS)	The Pipe Support Design Criteria considers all load types identified in ASME B31.3 and utilizes ASME Section III, Division 1, Subsection NF and Appendix F to supplement the requirements of ASME B31.3 for seismic design of SC-I/II and SC-III/IV pipe supports. Bounding load cases are passed to the pipe support designers from the results of the ancillary equipment piping stress analyses. Details of the seismic design methodology are discussed in the Pipe Support Design Criteria document. Analysis is by manual calculation and computer programs that have been tested and approved as discussed in the Verification and Validation Test Plan for Bechtel's ME150 Pipe Support Family of Programs (PCFAPPS). The Ancillary Equipment Pipe Support Design document shows examples of typical equipment supports. These are appropriate codes and standards for design of the RDP system ancillary equipment supports. Ancillary equipment supports are to be designed to allow a minimum of heat to be transferred to the building structures (building structures not to exceed 150 °F for concrete and 200 °F for steel). Design standards for vessel internal equipment supports are discussed in the integrity assessment for the RDP system vessels.

Connections	Seams and connections are adequately designed.	24590-WTP-DB-ENG-01-001, Rev 1A, Basis of Design; 24590-WTP-DC-PS-01-001, Rev. 2, Pipe Stress Design Criteria including "Pipe Stress Criteria" and "Span Method Criteria"; ASME Boiler and Pressure Vessel Code, Section IX, Welding and Brazing Qualifications; ASME/ANSI B16.5, 1988 Edition, Piping Flanges and Flanged Fittings; 24590-WTP-PER-PL-02-001, Rev. 5, Piping Material Class Description	The Basis of Design states that in-cell piping that is non-maintainable will be fully welded. The Pipe Stress Design Criteria document specifies the ASME B31.3 Process Piping design code for the piping systems. Welding is to be performed in accordance with the requirements of ASME B31.3 and the ASME B&PV Code, Section IX. Flange connections are to be designed in accordance with ANSI B16.5 as called out by piping material class. These are appropriate codes and standards for design and fabrication of the RDP system ancillary equipment.
Supports	The system will withstand the effects of frost heave.	System Description and SDCN listed above under References; 24590-WTP-DC-ST-01-001, Rev. 2, Structural Design Criteria	The ancillary equipment associated with the RDP system considered in this assessment is located in above grade hot cells and black cells inside the Pretreatment Facility. The Structural Design Criteria requires that all structural foundations shall extend into the surrounding soil below the frost line to preclude frost heave. The frost line is 30 in. below grade. The PTF building foundations are not subject to frost heave; therefore, the ancillary equipment located inside the building is not subject to frost heave.

Waste Characteristics	Characteristics of the waste to be stored or treated have been identified (ignitable, reactive, toxic, specific gravity, vapor pressure, flash point, temperature)	24590-WTP-PSAR-ESH-01-002-02, Rev. 1A, Preliminary Safety Analysis Report (PSAR) to Support Construction Authorization; PT Facility Specific Information; System Description and SDCN and Process Flow Diagram listed above under References; Plant Item Material Selection Data Sheet, 24590-PTF-N1D-RPD-00001, Rev. 0, RDP-VSL-00002A/B/C (PTF) Spent Resin Slurry Vessels; 24590-WTP-PER-PR-03-002, Rev. 1, Toxic Vapors and Emissions from WTP Tank Systems and Miscellaneous Treatment Unit Systems; 24590-WTP-PER-PR-03-001, Rev. 1, Prevention of Hydrogen Accumulation in WTP Tank Systems and Miscellaneous Treatment Unit Systems.	The PSAR provides a summary of potential hazardous conditions associated with each RDP vessel and the associated ancillary equipment. Design provisions for control of these hazards are listed in the PSAR and the individual System Descriptions. 24590-WTP-PER-PR-03-002 provides discussion of toxic vapor and emission characteristics. The RDP System Description identifies the safety functions for ancillary equipment to include the stop of all transfers into the vessel at a liquid level set point, provide a point of measurement for slurry residual radiation detection, providing primary confinement of the wastes during normal operations, upset conditions and during and after a SC-II Design Basis Seismic Event, and providing sufficient agitation and ventilation to prevent hydrogen accumulation/storage in the waste. Ancillary equipment associated with the Spent Resin Slurry Vessels (RDP-VSL-00002A/B/C) handle caustic slurries or vessel ventilation gases. Caustic slurries of resin are received from the cesium ion exchange columns upon displacement with the transfer of transport liquor from an adjoining slurry vessel and fluidization of the resin. The resin slurry is mixed with pulse jet mixers and circulated through a sample loop in order to insure that the resin has been adequately eluted, and to minimize hydrogen retention within the slurry, as shown on the Process Flow Diagram. 24590-WTP-PER-PR-03-001 describes approaches to minimizing hydrogen accumulation. The primary function of the ancillary equipment associated with the RDP System is to provide a primary pressure and fluid boundary to protect facility workers from the hazardous materials in the vessel transfer streams and vessel ventilation stream and to provide for hydrogen mitigation.

Waste Characteristics	Ancillary equipment is designed to handle the wastes with the characteristics defined above and any treatment reagents.	24590-WTP-PER-M-02-002, Rev 1, Materials for Ancillary Equipment; System Description and SDCN listed above under References; 24590-WTP-PER-PL-02-001, Rev. 5, Piping Material Class Description	The System Description indicates that the RDP system Spent Resin Slurry Vessels collect caustic waste and slurries of organic resin waste from the cesium ion exchange system (CXP) and demineralized water from the DIW system. No additional reagents are anticipated to be added to this system during normal operations. The Materials for Ancillary Equipment document requires that the material selection and corrosion/erosion allowances for ancillary equipment in contact with the waste will be equal to or better than the material and corrosion allowance of the waste source vessels except as noted therein. The RDP vessels and nozzles are fabricated of 316L stainless steel. The Piping Material Class Description lists 316L stainless steel as the material selection for the RDP system ancillary equipment.

Compatibility	The pH range of the waste, waste temperature and the corrosion behavior of the structural materials are adequately addressed. Ancillary equipment material and protective coatings ensure the ancillary equipment structure is adequately protected from the corrosive effects of the waste stream and external environments. The protection is sufficient to ensure the equipment will not leak or fail for the design life of the system.	System Description, SDCN, vessel material selection data sheet, and MR dewatering skid technical specification listed above under References; 24590-WTP-DB-ENG-01-001, Rev 1A, Basis of Design; 24590-WTP-PER-M-02-002, Rev 1, Materials for Ancillary Equipment; 24590-WTP-3PS-NN00-T0001, Rev 0, Engineering Specification for Hot and Anti-Sweat Thermal Insulation	The Basis of Design identifies a service design life of 40 years for the ancillary equipment. All non-maintainable items will be designed to last the life of the facility. Detailed material selection (corrosion) analyses were conducted for the Spent Resin Slurry vessels in the PT facility process design. The Materials for Ancillary Equipment document requires that the material selection and corrosion/erosion allowances for ancillary equipment in contact with the waste will be equal to or better than the material and corrosion allowance of the waste source vessels except as noted therein. The Thermal Insulation specification requires that all insulating materials used on the outside of ancillary equipment be pre-approved for use on austenitic stainless steel in accordance with applicable ASTM procedures and tests to preclude external corrosion of ancillary equipment. Corrosion allowances are considered for all ancillary equipment, therefore, the ancillary equipment will provide the expected design service life.

Corrosion Allowance	Corrosion allowance is adequate for the intended service life of the ancillary equipment.	Drawings listed above under References; 24590-WTP-DC-PS-01-001, Rev. 2, Pipe Stress Design Criteria including "Pipe Stress Criteria" and "Span Method Criteria"; 24590-WTP-DB-ENG-01-001, Rev 1A, Basis of Design; 24590-WTP-PER-M-02-002, Rev 1, Materials for Ancillary Equipment; 24590-WTP-PER-PL-02-001, Rev. 5, Piping Material Class Description	The Pipe Stress Design Criteria document requires use of the ASME B31.3 Code for ancillary equipment design. Consideration of corrosion, including corrosion allowance, is a mandatory requirement of ASME B31.3. A required service design life of 40 years is identified in the Basis of Design for ancillary equipment located in inaccessible process cells. Detailed material selection (corrosion) analyses are conducted for each vessel and major components in the RDP system in the PT Facility during process design. The Materials for Ancillary Equipment document requires that downstream ancillary equipment is to be constructed of equal or better materials than the source vessel, and with the same corrosion allowance as the source vessel except as noted therein. Bounding corrosion allowances are listed for each piping material class in the Piping Material Class Description document. The specified corrosion allowances are adequate for the intended service life of the ancillary equipment.
Strength	Pressure controls (vents and relief valves) are adequately designed to ensure pressure relief if normal operating pressures in the vessels are exceeded.	Drawings listed above under References; 24590-WTP-DC-PS-01-001, Rev. 2, Pipe Stress Design Criteria including "Pipe Stress Criteria" and "Span Method Criteria"; 24590-WTP-PER-PL-02-001, Rev. 5, Piping Material Class Description	The Pipe Stress Design Criteria document specifies use of ASME B31.3 as the design code for the WTP piping. ASME B31.3 requires provision be made to safely contain or relieve any pressure to which the piping may be subjected. ASME B31.3 piping not protected by a pressure relieving device, or that can be isolated from a pressure relieving device must be designed for at least the highest pressure that can be developed. Bounding pressure and temperature limits are listed for each of the piping material classes in the Piping Material Class Description document. Pressure control design is adequate to ensure safe operation during excursion from normal operating pressures.

	Maximum flows and any unusual operating stresses are identified	Drawings listed above under References; 24590-WTP-DC-PS-01-001, Rev 2, Pipe Stress Design Criteria including "Pipe Stress Criteria" and "Span Method Criteria"; 24590-WTP-PER-PL-02-001, Rev. 5, Piping Material Class Description	The expected flow paths for the ancillary equipment are identified on the P&ID drawings. The Pipe Stress Design Criteria document specifies the ASME B31.3 code for piping design. This code requires piping to be designed to the highest pressure that can be developed in a piping system assuring that maximum operating stresses remain within code allowables. The Piping Material Class Description document lists the bounding pressure and temperature limits for each piping material class.
Secondary Containment	Ancillary equipment is designed with secondary containment that is constructed of materials compatible with the waste and of sufficient strength to prevent failure (pressure gradients, waste, climatic conditions, daily operations), provided with a leak-detection system, and designed to drain and remove liquids.	Drawings, System Description and SDCN listed above under References	The ancillary equipment considered in this assessment is located in process cells (black and hot) and accessible spaces. The Spent Resin Slurry Vessels are housed in the black cell P-0112 in the northwest zone of the PT Facility with slurry pumps, primary jumpers, and piping adjacent to the black cell within the hot cell P-0123. Portions of the piping for slurry transfer to and from the dewatering skid (housed in P-0119, to PTF central-east) are double contained where they pass through R2/C3 zones and drain to sump PWD-SUMP-00013 in the R5/C5 black cell P-0117A. Secondary containment for ancillary equipment within the cells is provided by the liners and sumps as appropriate and is outside the scope of this integrity assessment. Resin slurry is discharged to dewatering containers within shipping containers outside the scope of this integrity assessment.

Job No. 24590

Bechtel National, Inc.

SUPPLIER DOCUMENT STATUS

1. [X] Work may proceed.
2. [ ] Review and resubmit. Work may proceed subject to resolution of indicated comments.
3. [ ] Review and resubmit. Work may not proceed.
4. [ ] Review not required. Work may proceed.

Permission to proceed does not constitute acceptance or approval of design details, calculations, analyses, test methods, or materials developed or selected by the supplier and does not relieve supplier from full compliance with contractual obligations.

REVIEWED									

G-321 Document Category N/A
[From Supplement A to G-321-E (E) or G-321-V (V), as applicable, or "N/A" if SSRS is used]

Supersedes BNI Document No. N/A Rev. _____
[When applicable]

Accepted by DCPflugner (Print Name) DCPflugner (Signature) 5/20/04 (Date)

Released by N/A (Print Name) _____ (Signature) _____ (Date)
[When applicable]

416 GP&S 7-03

24590-CM-HC4-HXYG-00138-02-00031
REV. 00A

SUBCONTRACT SUBMITTAL

Best Available Copy

R10313647

IQRPE REVIEW
OF
PRETREATMENT FACILITY (PTF) ELEVATION 77'-0" MISCELLANEOUS TREATMENT UNITS SECONDARY CONTAINMENT

"I, John T. Baxter, have reviewed, and certified a portion of the design of a new tank system or component located at the Hanford Waste Treatment Plant, owned/operated by Department of Energy, Office of River Protection, Richland, Washington. My duties were independent review of the current design for the Pretreatment Facility (PTF) Elevation 77'-0" Miscellaneous Treatment Units Secondary Containment as required by the Dangerous Waste Regulations, namely, WAC 173-303-640(3) applicable paragraphs, i.e., (a) through (g)."

"I certify under penalty of law that I have personally examined and am familiar with the information submitted in this document and all attachments and that, based on my inquiry of those individuals immediately responsible for obtaining the information, I believe that the information is true, accurate, and complete. I am aware that there are significant penalties for submitting false information, including the possibility of fine and imprisonment."

The documentation reviewed indicates that the design intent fully satisfies the requirements of the WAC.

The attached review is 6 pages numbered 1 through 6.

JOHN T. BAXTER
STATE OF WASHINGTON
18978
REGISTERED
PROFESSIONAL ENGINEER
EXPIRES: 10 / 28 / 04

05/18/04

John T. Baxter
Signature

05/18/2004
Date

24590-CM-HC4-HXYG-00138-02-00031, REV. 00A

STRUCTURAL INTEGRITY ASSESSMENT OF THE PRETREATMENT FACILITY (PTF) ELEVATION 77'-0" MISCELLANEOUS TREATMENT UNITS SECONDARY CONTAINMENT

COGEMA-IA-057

REV. 0

Please note that source, special nuclear and byproduct materials, as defined in the Atomic Energy Act of 1954 (AEA), are regulated at the U.S. Department of Energy (DOE) facilities exclusively by DOE acting pursuant to its AEA authority. DOE asserts, that pursuant to the AEA, it has sole and exclusive responsibility and authority to regulate source, special nuclear, and byproduct materials at DOE-owned nuclear facilities. Information contained herein on radionuclides is provided for process description purposes only.

Scope	Scope of this Integrity Assessment	This integrity assessment addresses the Pretreatment Facility Secondary Containment at Elevation 77'-0". Specific rooms considered in this assessment are: P-0402, P-0407, P-0410, P-0411, P-0415, P-0415A, P-0425, P-0426, P-0422A, P-0423 and P-0430.
References	Drawings	The drawings are the general arrangement plan at elevation 77'-0" and the associated sections. 24590-PTF- P1- P01T- P0004, Rev. 0, Pretreatment Facility General Arrangement Plan at EL. 77'-0"; 24590-PTF-P1-P01T-P0007, Rev. 5, Pretreatment Facility General Arrangement Section A-A; 24590-PTF-P1-P01T-P0008, Rev. 5, Pretreatment Facility General Arrangement Section B-B; 24590-PTF-P1-P01T-P0009, Rev. 8, Pretreatment Facility General Arrangement Section C-C; 24590-PTF-P1-P01T-P0010, Rev. 5, Pretreatment Facility General Arrangement Section D-D; 24590-PTF-P1-P01T-P0011, Rev. 6, Pretreatment Facility General Arrangement Section E-E; 24590-PTF-P1-P01T-P0012, Rev. 6, Pretreatment Facility General Arrangement Sect. F-F and Sect. G-G; 24590-PTF-P1-P01T-P0013, Rev. 5, Pretreatment Facility General Arrangement Sect. H-H and Sect. J-J; 24590-PTF-P1-P01T-P0014, Rev. 7, Pretreatment Facility General Arrangement Sect. K-K and Sect. L-L; 24590-PTF-P1-P01T-P0015, Rev. 7, Pretreatment Facility General Arrangement Sect. M-M and Sect. N-N; 24590-PTF-P1-P01T-P0016, Rev. 5, Pretreatment Facility General Arrangement Sect. P-P and Sect. Q-Q; 24590-PTF-P1-P01T-P0017, Rev. 5, Pretreatment Facility General Arrangement Sect. R-R

Summary of Assessment

For each item of "Information Assessed" (i.e., Criteria) on the following pages, the items listed under "Source of Information" were reviewed and found to furnish adequate design controls and requirements to assure the design intent fully satisfies the WAC requirements.

	Information Assessed	Source of Information	Assessment
Foundation Design	Description of subsurface conditions and soil bearing capacity are adequate.	24590-WTP-DC-ST-01-001, Rev. 2, Structural Design Criteria; 24590-BOF-3PS-CE01-T0001, Rev. 5`, Engineering Specification for Excavation and Backfill; 24590-BOF-3PS-C000-T0001, Rev. 2, Engineering Specification for Material Testing Services	The Structural Design Criteria adequately presents design guidance for both mat and spread footings based on the geotechnical site investigation for the facility, (WTSC99-1036-42-17, Shannon & Wilson, 2000). Bearing capacity and settlement design parameters are furnished for the dense Hanford Upper and Lower Sand Units and Structural Fill. Use of the loose wind blown (dune) sands for foundations is precluded. The Excavation and Backfill Specification provides structural backfill requirements based on the geotechnical report and adequate current codes and standards for selection, placing, and compacting structural backfill including testing of candidate fill materials and completed backfills. The Specification for Material Testing Services provides current adequate codes and standards for testing of candidate structural fill materials and in-situ testing of structural fills as they are constructed. The codes and standards are consistent with those called out in the Excavation and Backfill Specification.
	Foundation design loads (including full tanks) and estimated settlement are adequately considered.	24590-WTP-DC-ST-01-001, Rev. 2, Structural Design Criteria; ASCE 7-98, Minimum Design Loads for Buildings and Other Structures	The Structural Design Criteria uses current adequate standards to define design loads and load combinations (ASCE 7-98, ACI 349-01 and ACI 318-99). Dead and Fluid loads are included in these loads and load combinations. Settlement design parameters are included in the Structural Design Criteria subsection on geotechnical design parameters and foundation design.
	Design calculation approach and design basis of footings with design standard references (e.g., ACI) are adequate.	24590-WTP-DC-ST-01-001, Rev. 2, Structural Design Criteria; ACI 349-01, Code Requirements for Nuclear Safety-Related Concrete Structures; ACI 318-99, Building Code Requirements for Structural Concrete; ANSI/AISC N690, Specification for the Design, Fabrication and Erection of Steel Safety-Related Structures for Nuclear Facilities; AISC MO16-89, Manual of Steel Construction - Allowable Stress Design, Ninth Edition	The Structural Design Criteria references current adequate design criteria for the design of concrete foundations and footings. ACI 349-01 is referenced for design of Seismic Category (SC-I/II) structures and ACI 318-99 is referenced for the strength design of Seismic Category (SC-III/IV) structures. Structural steel components of the secondary containment structures are to be designed using ANSI/AISC N690 for Seismic Category (SC-I/II) structures and the AISC Allowable Stress Design code for Seismic Category (SC-III/IV) structures and liners. The Structural Design Criteria provides a detailed breakdown of the codes and standards applicable to each of the Seismic Categories.

	Information Assessed	Source of Information	Assessment
Foundation Design	Foundation material is compatible with the soil.	24590-WTP-3PS-DB01-T0001, Rev. 6, Engineering Specification for Furnishing and Delivering Ready-Mix Concrete; 24590-BOF-3PS-C000-T0001, Rev. 2, Engineering Specification for Material Testing Services; 24590-WTP-DB-ENG-01-001, Rev. 1A, Basis of Design	The specification for Furnishing and Delivering Ready-Mix Concrete provides adequate current testing requirements for the selection of coarse and fine aggregates and the procurement of cementitious materials. Adequate test procedures are provided in the Material Testing Services specification for testing candidate aggregates for chemical reactivity. Instructions for mixing and delivering Ready-Mix Concrete are adequate and current. As noted in the Basis of Design document (section 4.7), the water table lies about 200 feet below the deepest foundations so there is little reason to expect compatibility problems between the concrete foundations and the site soils.
	Foundation will withstand the effects of frost heave	24590-WTP-DC-ST-01-001, Rev. 2, Structural Design Criteria	The Structural Design Criteria includes adequate provisions to preclude frost heave in the section addressing lateral earth pressure loads. All structural foundations are required to extend into the soil below the frost line to preclude frost heave. The frost line is 30 inches below finished grade. Therefore, the foundation will not be subjected to frost heave.
Seismic Design	Seismic considerations have been adequately addressed.	24590-WTP-PER-CSA-02-001, Rev. 4, Secondary Containment Design; 24590-WTP-DC-ST-01-001, Rev. 2, Structural Design Criteria; ANSI/AISC N690, Specification for the Design, Fabrication and Erection of Steel Safety-Related Structures for Nuclear Facilities; AISC MO16-89, Manual of Steel Construction - Allowable Stress Design, Ninth Edition; ASCE 4-98, Seismic Analysis of Safety Related Nuclear Structures and Commentary	The Secondary Containment Design document describes and provides references for the design methodology, materials, loads, and load combinations (including seismic loads) for the PTF Building secondary containment. The Structural Design Criteria provides detailed discipline specific codes and standards for the design of Seismic Category (SC-I/II) and (SC-III/IV) PTF secondary containment foundations and structures by the design engineers. ACI-349-01 and ACI 318-99 provide the design codes and load combinations for design of the secondary containment reinforced concrete foundations and structures. Structural steel components of the secondary containment structures and stainless steel liners are to be designed using ANSI/AISC N690 and the AISC Allowable Stress Design code respectively. ASCE 4-98 is used for guidance on seismic analysis of safety-related nuclear structures. These codes and standards are adequate and acceptable for addressing seismic considerations.

	Information Assessed	Source of Information	Assessment
Compatibility	The stored waste is compatible with its Secondary Containment and leak detection hardware based on a detailed chemical and physical analysis of the wastes used and other information sources.	24590-WTP-DB-ENG-01-001, Rev. 1A, Basis of Design; 24590-WTP-PER-M-02-001, Rev. 3, Material Selections for Building Secondary Containment/Leak Detection; 24590-WTP-PER-CSA-02-001, Rev.4, Secondary Containment Design; 24590-WTP-3PS-AFPS-TP006, Rev. 0, Engineering Specification for Field Applied Special Protective Coatings for Secondary Containment Areas	The Basis of Design states that cells and sumps are appropriately lined and any spills will be removed and flushed within 24-hrs or as timely as possible. Secondary Containment liner design for cells at elevation 77'-0" requires special protective coatings only. Based on detailed analysis of the corrosive properties of expected waste process operations and evaluation of potential leak scenarios, the Material Selection report identifies appropriate and adequate corrosion resistant materials requirements for Secondary Containment liners. The Secondary Containment Design report provides adequate typical construction details for liners and special protective coatings. The Engineering Specification for Field Applied Special Protective Coatings for Secondary Containment Areas document provides detailed information on chemical resistance endurance testing conducted for approved special protective coatings.
Strength	The design shows that the Secondary Containment has sufficient strength and thickness to prevent failure owing to pressure gradients, static head during a release, physical contact with the waste, climatic conditions, and the stress of daily operations (e.g., vehicular traffic).	Drawings listed above under References; 24590-WTP-PER-CSA-02-001, Rev. 4, Secondary Containment Design; 24590-WTP-DC-ST-01-001, Rev. 2, Structural Design Criteria	Because the Secondary Containment being considered is installed inside the Pretreatment Facility Building as shown on the drawings, climatic conditions and vehicular traffic are not applicable load cases. The Secondary Containment Design document identifies adequate and appropriate design codes and standards and all applicable load cases (operational stresses) from site specific conditions that must be considered in the design. The Structural Design Criteria provides an adequate set of design operational loads to assure the continued integrity of the secondary containment structures for the design life of the building.
	The Secondary Containment system has sufficient strength in the presence of operational stresses from site-specific conditions (i.e., traffic, heavy equipment, precipitation, frost).	Drawings listed above under References; 24590-WTP-PER-CSA-02-001, Rev.4, Secondary Containment Design; 24590-WTP-DC-ST-01-001, Rev. 2, Structural Design Criteria	Because the Secondary Containment being considered is installed inside the Pretreatment Facility Building as shown on the drawings, precipitation and frost are not applicable load cases. The Secondary Containment Design document identifies adequate and appropriate general design codes and standards for the secondary containments. The Structural Design Criteria provides detailed floor loading information that envelopes expected operational loadings in the accessible areas of the building.

	Information Assessed	Source of Information	Assessment
Foundation Integrity	The Secondary Containment is properly supported by a foundation or base in order to prevent failure from settlement, compression, or uplift, including the residual effects of installation.	Drawings listed above under References; 24590-WTP-DC-ST-01-001, Rev. 2, Structural Design Criteria; 24590-WTP-PER-CSA-02-001, Rev. 4, Secondary Containment Design	These conditions are fully addressed in the Structural Design Criteria and the Secondary Containment Design documents. The design requirements and codes and standards specified require consideration of loading conditions that are adequate to satisfy these performance goals. The procurement and construction specifications adequately provide for proper foundation construction and installation of the Secondary Containment. The General Arrangement Plan drawing and the associated Cross-Section drawings show the Secondary Containment boundaries.
	The placement, structural support, and type of material used for backfill around and below the Secondary Containment are appropriate.	24590-BOF-3PS-CE01-T0001, Rev. 5, Engineering Specification for Excavation and Backfill; 24590-BOF-3PS-C000-T0001, Rev. 2, Engineering Specification for Material Testing Services	The Excavation and Backfill and Material Testing specifications contain current adequate industry standards for selecting and testing fill materials, placing and compacting backfills, and testing not less than once each lift to assure adequate compaction. Alternative requirements provide for the use of Controlled Density Fills in place of granular fills with prior approval from the Structural Engineering organization. Requirements for testing and record keeping are current and adequate for both "safety grade" fills and "commercial grade" fills.
Infiltration	The design or operation (e.g., diking & curbing) prevents run-on or infiltration of precipitation into the Secondary Containment system unless the collection system has sufficient excess capacity (25 yr rainfall) to contain the run-on precipitation.	24590-WTP-DB-ENG-01-001, Rev. 1A, Basis of Design; Drawings listed above under References	This requirement is specified in the Basis of Design. Secondary containments being reviewed in this Integrity Assessment are all located inside the Pretreatment Facility Building where they are protected from precipitation, run-on and infiltration as shown in the General Arrangement Plan and the associated Cross-Section drawings.
	The design includes an external moisture barrier or other means to prevent moisture from entering the cell.	24590-WTP-DB-ENG-01-001, Rev. 1A, Basis of Design; Drawings listed above under References	The Secondary Containments shown in the General Arrangement Plan at Elevation 77'-0" are inside the Pretreatment Facility Building which shields them from precipitation and surface water percolation. The ground water table is located about 200 feet below the floors of the cells at elevation 0'-0" as noted in the Basis of Design. Therefore, there is no hydraulic head to induce lateral groundwater movement.

	Information Assessed	Source of Information	Assessment
Liner System	The containment area is free of cracks or gaps and the design discusses methods of their minimization.	24590-WTP-PER-CSA-02-001, Rev. 4, Secondary Containment Design; 24590-WTP-3PS-AFPS-TP006, Rev. 0, Engineering Specification for Field Applied Special Protective Coatings for Secondary Containment Areas	The Secondary Containment Design document provides adequate and appropriate codes and standards for design of leak-tight liners. This report (CSA-02-001) includes appropriate details for design and installation of special protective coatings free of cracks and gaps. The Engineering Specification for Field Applied Special Protective Coatings provides detailed information on the tested and approved coating systems. This information includes directions for surface preparation, patching materials and application methods, and specific directions for application of multi-layer coatings.
	The design has considered the compatibility of the concrete liner or coatings and waste and presents information on coatings planning to be used from the manufacturer addressing compatibility with the stored waste. The lining or coating must prevent the waste from migrating into the concrete.	24590-WTP-PER-M-02-001, Rev. 3, Material Selections for Building Secondary Containment/Leak Detection; 24590-WTP-PER-CSA-02-001, Rev. 4, Secondary Containment Design; 24590-WTP-3PS-AFPS-TP006, Rev. 0, Engineering Specification for Field Applied Special Protective Coatings for Secondary Containment Areas	The Material Selections Study contains adequate and appropriate general information on the compatibility of planned Secondary Containment liners and special protective coatings with the waste. The Secondary Containment Design report provides adequate and appropriate standard details for design and installation of special protective coating liners that will prevent migration of the waste into the concrete. The Engineering Specification for Field Applied Special Protective Coatings provides detailed information on the tested and approved coating systems. This information includes directions for surface preparation, patching materials and application methods, and specific directions for application of multi-layer coatings.

Job No. 24590

Bechtel National, Inc.

SUPPLIER DOCUMENT STATUS

1. [X] **Work may proceed.**
2. [ ] **Revise and resubmit. Work may proceed subject to resolution of indicated comments.**
3. [ ] **Revise and resubmit. Work may not proceed.**
4. [ ] **Review not required. Work may proceed.**

Permission to proceed does not constitute acceptance or approval of design details, calculations, analyses, test methods, or materials developed or selected by the supplier and does not relieve supplier from full compliance with contractual obligations.

REVIEWED									

G-321 Document Category N/A
[From Supplement A to G-321-E (E) or G-321-V (V), as applicable, or "N/A" if SSRS is used]

Supersedes BNI Document No. N/A Rev. _____
[When applicable]

Accepted by DC Pfluger (Print Name) DC Pfluger (Signature) 6/2/04 (Date)

Released by N/A (Print Name) _____ (Signature) _____ (Date)
[When applicable]

416 GP&S 7-03

24590-CM-HC4-HXYG-00138-02-00033
REV. 00A

SUBCONTRACT SUBMITTAL

Best Available Copy

R10315961

COGEMA-IA-058, Rev. 0

IQRPE REVIEW - PRETREATMENT FACILITY (PTF) CESIUM ION EXCHANGE PROCESS – SYSTEM (CXP) VESSELS

"I, John T. Baxter have reviewed, and certified a portion of the design of a new tank system or component located at the Hanford Waste Treatment Plant, owned/operated by Department of Energy, Office of River Protection, Richland, Washington. My duties were independent review of the current design for the Pretreatment Facility (PTF) Cesium Ion Exchange Process – System (CXP) Vessels as required by The Dangerous Waste Regulations, namely, WAC 173-303-640(3) applicable paragraphs, i.e., (a) through (g)."

"I certify under penalty of law that I have personally examined and am familiar with the information submitted in this document and all attachments and that, based on my inquiry of those individuals immediately responsible for obtaining the information, I believe that the information is true, accurate, and complete. I am aware that there are significant penalties for submitting false information, including the possibility of fine and imprisonment."

The documentation reviewed indicate that the design intent fully satisfies the requirements of the WAC.

The attached review is seven (7) pages numbered one (1) through seven (7).

05/27/04

JOHN T. BAXTER
STATE OF WASHINGTON
18978
REGISTERED
PROFESSIONAL ENGINEER

EXPIRES: 10/28/04

24590-CM-HC4-HXYG-00138-02-00033, REV.00A

John T. Baxter
Signature

05/27/2004
Date

STRUCTURAL INTEGRITY ASSESSMENT OF THE PRETREATMENT FACILITY (PTF) CESIUM ION EXCHANGE PROCESS - SYSTEM (CXP) VESSELS

COGEMA-IA-058
Rev. 0

Please note that source, special nuclear and byproduct materials, as defined in the Atomic Energy Act of 1954 (AEA), are regulated at the U.S. Department of Energy (DOE) facilities exclusively by DOE acting pursuant to its AEA authority. DOE asserts, that pursuant to the AEA, it has sole and exclusive responsibility and authority to regulate source, special nuclear, and byproduct materials at DOE-owned nuclear facilities. Information contained herein on radionuclides is provided for process description purposes only.

Scope	Scope of this Integrity Assessment	The scope of this integrity assessment includes the Pretreatment Facility (PTF) Cesium (Cs) Ion Exchange (IX) Process – System CXP Vessels. The Vessels are; Cs IX Vessel CXP-VSL-00001, Caustic Rinse Collection Vessel CXP-VSL-00004, Cs Reagent Vessel CXP-VSL-00005 and Cesium Ion Exchange Treated LAW Collection Vessels CXP-VSL-00026A/B/C. The primary function of the CXP System including the vessels is to remove cesium from filtered process liquor to prepare it for treatment in the low activity waste (LAW) melters.
References	Material Requisitions, Drawings, Data Sheets, Specifications and System Description	Material Requisition No: 24590-QL-MRB-MVA0-00001, Rev. 3, Pressure Vessels, High Alloy Shop Fabricated Large, QL-1 (VXLA), MR Section 2 – Technical Specifications (Rev. 0, May 2002); Material Requisition Supplement 24590-QL-MRB-MVA0-00001-S01, S02, S03, S04, S05, S0006 & S0007 to MR No. 24590-QL-MRB-MVA0-00001, Rev. 3; Material Requisition No: 24590-QL-MRA-MVA0-00006, Rev. 1, Pressure Vessels, High Alloy Shop Fabricated Large, QL-1 (N141)(MS076), MR Section 2 – Technical Specifications (Rev. 5, August 19, 2003); Material Requisition Supplement 24590-QL-MRA-MVA0-00006-S0001 to MR No: 24590-QL-MRA-MVA0-00006, Rev. 1; Material Requisition No: 24590-QL-MRC-MVA0-A0002, Rev. 0, Pressure Vessels, High Alloy Or Clad, MR Section 2 – Technical Specifications (Rev. 4, April 10, 2003); Material Requisition Supplement 24590-QL-MRC-MVA0-A0002-S0001 & -S0004 to MR No: 24590-QL-MRC-MVA0-A0002, Rev. 0; Mechanical Data Sheet: Vessel 24590-PTF-MVD-CXP-00007, Rev. 1, Cs IX Feed Vessel CXP-VSL-00001; Mechanical Data Sheet: Vessel 24590-PTF-MVD-CXP-00015, Rev. 1, Cs, IX, Caustic Rinse Collection Vessel CXP-VSL-00004; Mechanical Data Sheet: Vessel 24590-PTF-MVD-CXP-00016, Rev. 2, Cs Reagent Vessel CXP-VSL-00005; Mechanical Data Sheet: Vessel 24590-PTF-MVD-CXP-00021, Rev. 1, Cesium Ion Exchange Treated LAW Collection Vessel CXP-VSL-00026A; Mechanical Data Sheet: Vessel 24590-PTF-MVD-CXP-00022, Rev. 1, Cesium Ion Exchange Treated LAW Collection Vessel CXP-VSL-00026B; Mechanical Data Sheet: Vessel 24590-PTF-MVD-CXP-00023, Rev. 1, Cesium Ion Exchange Treated LAW Collection Vessel CXP-VSL-00026C;

References	Material Requisitions, Drawings, Data Sheets, Specifications and System Description	Plant Item Material Selection Data Sheet 24590-PTF-N1D-CXP-P0001, Rev. 0, Cs Ion Exchange Feed Vessel CXP-VSL-00001 (PTF); Plant Item Material Selection Data Sheet 24590-PTF-N1D-CXP-P0007, Rev. 0, Cs IX Caustic Rinse Collection Vessel CXP-VSL-00004 (PTF); Plant Item Material Selection Data Sheet 24590-PTF-N1D-CXP-P0008, Rev. 0, Cs IX Reagent Vessel CXP-VSL-00005 (PTF); Plant Item Material Selection Data Sheet 24590-PTF-N1D-CXP-P0003, Rev. 0, IX Treated LAW Collection Vessel CXP-VSL-00026A/B/C (PTF); 24590-PTF-P1-P01T-P0001, Rev. 3, Pretreatment Facility General Arrangement Plan @ EL. 0'-0"; 24590-PTF-MV-CXP-00001, Rev. 0, Equipment Assembly Cs IX Vessel CXP-VSL-00001 (Q); 24590-PTF-MV-CXP-00002, Rev. 0, Equipment Assembly Caustic Rinse Collection Vessel CXP-VSL-00004 (Q); 24590-PTF-MV-CXP-00003, Rev. 1, Equipment Assembly Cesium Reagent Vessel CXP-VSL-00005; 24590-PTF-MV-CXP-00008, Rev. 0, Equipment Assembly Cesium Ion Exchange Treated LAW Collection Vessel CXP-VSL-00026A; 24590-PTF-MV-CXP-00009, Rev. 0, Equipment Assembly Cesium Ion Exchange Treated LAW Collection Vessel CXP-VSL-00026B; 24590-PTF-MV-CXP-00010, Rev. 0, Equipment Assembly Cesium Ion Exchange Treated LAW Collection Vessel CXP-VSL-00026C; 24590-PTF-3YD-CXP-00001, Rev. 0, System Description for the Cesium Ion Exchange Process – System CXP; SDCN No. 24590-PTF-3YN-CXP-00002 for System Description No. 24590-PTF-3YD-CXP-00001, Rev. 0

Summary of Assessment

For each item of "Information Assessed" (i.e., Criteria) on the following pages, the items listed under "Source of Information" were reviewed and found to furnish adequate design controls and requirements to assure the design intent fully satisfies the WAC requirements.

Design	Vessel design standards are appropriate and adequate for the vessel's intended use.	Drawings, Material Requisitions and Mechanical Data Sheets listed above under References; 24590-WTP-3PS-MV00-T0001, Rev. 0, Engineering Specification for Pressure Vessel Design and Fabrication (CXP-VSL-00001, CXP-VSL-00004)(Rev. 1, CXP-VSL-00026A/B/C); SCN No. 24590-WTP-3PN-MV00-00006 for Specification No. 24590-WTP-3PS-MV00-T0001, Rev. 1; 24590-WTP-3PS-MV00-T0003, Rev. 1, Engineering Specification for Pressure Vessel Fatigue Analysis; ASME Boiler and Pressure Vessel Code (B&PV), Section VIII, Division 1, Rules for Construction of Pressure Vessels, American Society of Mechanical Engineers; ASME Boiler and Pressure Vessel Code, Section VIII, Division 2, Alternative Rules, American Society of Mechanical Engineers	The Material Requisitions require use of The Engineering Specification for Pressure Vessel Design and Fabrication for vessels CXP-VSL-00001, CXP-VSL-00004, CXP-VSL-00005 and CXP-VSL-00026A/B/C. This specification requires that the vessels and all vessel appurtenances are to be designed to ASME B&PV Code, Section VIII, Division 1 rules. Additional supplementary requirements are specified in the specifications for Pressure Vessel Design and Fabrication. These supplementary requirements address pressure vessel fatigue analysis, positive material identification, standard fabrication tolerances, acceptable welding procedures for the vessel and appurtenances, welder qualifications and testing records, NDE inspections and records, quality assurance requirements, and packaging, shipping, handling and storage requirements. Some of the vessels' internal equipment is subject to cyclic loading, e.g., pulse jet mixers and charge vessels. The Engineering Specification for Pressure Vessel Fatigue Analysis requires use of the fatigue design standards in ASME B&PV Code, Section VIII, Division 2, which are appropriate for components with a high number of load cycles. The Mechanical Data Sheets identify the CXP vessels as Quality Level (QL-1) and Seismic Category (SC-I) equipment. These quality level and seismic category classifications are discussed in the Engineering Specification for Pressure Vessel Design and Fabrication. These are adequate and acceptable codes and standards for design and fabrication of these CXP system columns and vessels.
	If a non-standard vessel is to be used, the design calculations demonstrate sound engineering principles of construction.	24590-WTP-3PS-MV00-T0001, Rev. 0, Engineering Specification for Pressure Vessel Design and Fabrication (CXP-VSL-00001, CXP-VSL-00004)(Rev. 1, CXP-VSL-00026A/B/C); SCN No. 24590-WTP-3PN-MV00-00006 for Specification No. 24590-WTP-3PS-MV00-T0001, Rev. 1;	The Engineering Specifications for Pressure Vessel Design and Fabrication require that the CXP system vessels are to be designed and fabricated in accordance with the requirements of ASME Section VIII, Division 1. The vessels are to be delivered after design, fabrication, inspection and testing with an ASME code stamp and they will be registered with the National Board. These are shop fabricated vessels for mixed waste service in the PTF. The design standards are appropriate and adequate for the equipments' intended uses.

Design	Vessel has adequate strength, after consideration of the corrosion allowance, to withstand the operating pressure, operating temperature, and seismic loads.	Drawings, Material Requisitions and Mechanical Data Sheets listed above under References; 24590-WTP-3PS-MV00-T0001, Rev. 0, Engineering Specification for Pressure Vessel Design and Fabrication (CXP-VSL-00001, CXP-VSL-00004)(Rev. 1, CXP-VSL-00026A/B/C); SCN No. 24590-WTP-3PN-MV00-00006 for Specification No. 24590-WTP-3PS-MV00-T0001, Rev. 1; 24590-WTP-3PS-MV00-T0002, Rev. 1, Engineering Specification for Seismic Qualification Criteria for Pressure Vessels; 24590-WTP-3PS-SS90-T0001, Rev. 0, Engineering Specification for Seismic Qualification of Seismic Category I and II Equipment and Tanks; ASME Section VIII, Division 1, Rules for Construction of Pressure Vessels, Division 2, Alternative Rules, American Society of Mechanical Engineers	The Engineering Specification for Pressure Vessel Design and Fabrication requires that the CXP vessels are to be designed to ASME Section VIII, Division 1 rules. This code requires specific consideration of the operating pressures, temperatures, seismic loads, and corrosion allowance in the design process. Supplementary design criteria are specified in the Engineering Specifications for Seismic Qualification Criteria for Pressure Vessels and Seismic Qualification of Seismic Category I and II Equipment and Tanks and to provide for the seismic design analysis. The Mechanical Data Sheets identify the operating pressure and temperature ranges for each vessel, the materials selected in the corrosion report, the corrosion allowance, and the requirements for seismic qualification in the design. The Mechanical Data Sheets indicate that the CXP vessels are to be analyzed as Seismic Category (SC-I) vessels which requires use of the supplementary seismic design requirements from ASME Section VIII, Division 2. These are adequate and appropriate codes and criteria to ensure the vessels have adequate strength at the end of their design lives.
Foundation	Vessel foundation will maintain the load of a full vessel.	Drawings and System Description listed above under References; 24590-WTP-3PS-MV00-T0001, Rev. 0, Engineering Specification for Pressure Vessel Design and Fabrication (CXP-VSL-00001, CXP-VSL-00004)(Rev. 1, CXP-VSL-00026A/B/C); SCN No. 24590-WTP-3PN-MV00-00006 for Specification No. 24590-WTP-3PS-MV00-T0001, Rev. 1	The Equipment Assembly drawings show the support arrangements for the CXP system vessels. Most of the CXP system vessels are provided with cylindrical skirts and a ring beam to provide for bearing on concrete and anchorage. The Cs Reagent Vessel, CXP-VSL-00005 is provided with four lug supports spaced 90 degrees apart on the shell. This vessel will be supported on the local floor structure at elevation 56'-0" as discussed in the System Description. The Engineering Specifications for Pressure Vessel Design and Fabrication requirements assure adequate vessel foundation designs for both skirts and support lugs. These codes and standards are adequate to assure that the vessel and column foundations will maintain the loads when the equipment is full.

Foundation	If in an area subject to flooding, the vessel is anchored.	24590-WTP-3PS-MV00-T0001, Rev. 0, Engineering Specification for Pressure Vessel Design and Fabrication (CXP-VSL-00001, CXP-VSL-00004)(Rev. 1, CXP-VSL-00026A/B/C); SCN No. 24590-WTP-3PN-MV00-00006 for Specification No. 24590-WTP-3PS-MV00-T0001, Rev. 1	The CXP system vessels are to be designed in accordance with the Engineering Specification for Pressure Vessel Design and Fabrication. Buoyant forces of an empty vessel in a flooded room are a mandatory standard design load case in this specification.
Frost Heave	Vessel system will withstand the effects of frost heave.	Drawings and System Description listed above under References 24590-WTP-DC-ST-01-001, Rev. 2, Structural Design Criteria	The PTF General Arrangement Plan at elevation 0'-0" shows that the CXP system vessels are installed in inaccessible process cells with the exception of the Cs Reagent Vessel, CXP-VSL-00005, which is supported on the floor structure at elevation 56'-0". These cells and floors are supported by the PTF mat foundation. The Structural Design Criteria requires that all structural foundations extend into the surrounding soil below the frost line in order to preclude frost heave. The frost line is located 30 in. below finished grade. The PTF mat foundation is not subject to frost heave; therefore, the CXP system vessels will not be subject to frost heave.
Waste Characteristics	Characteristics of the waste to be stored or treated have been identified (ignitable, reactive, toxic, specific gravity, vapor pressure, flash point, storage temperature)	Drawings, Mechanical Data Sheets and System Description listed above under References; 24590-WTP-PSAR-ESH-01-002-02, Rev. 1a, Preliminary Safety Analysis Report (PSAR) to Support Construction Authorization; PT Facility Specific Information	The System Description identifies that the CXP system processes filtered LAW waste feed with a sodium concentration of about 5 M and a pH of about 13. The Cs IX Feed Vessel (CXP-VSL-00001) and the Cs Reagent Vessel (CXP-VSL-00005) must function to provide primary containment of the waste during normal and abnormal operations, and during and after a design basis earthquake. Primary containment is required to protect the facility workers, co-located workers and the public from exposure to radiation and toxic waste hazards of the tank contents. These items must also retain integrity during all operating conditions to allow the hydrogen purge, dilution and mixing systems to function and maintain hydrogen concentrations in the vessel head spaces below flammability limits as discussed in the PSAR. The Cs IX Treated LAW Collection Vessels (CXP-VSL-00026A/B/C) and the Caustic Rinse Collection Vessel (CXP-VSL-00004) function to provide primary containment of the waste during normal and abnormal operations, and during and after a design basis earthquake. These tanks are not a concern for hydrogen control. All vessels are equipped with internal spray rings for decontamination.

Waste Characteristics	Vessel is designed to store or treat the wastes with the characteristics defined above and any treatment reagents.	Plant Item Material Selection Data Sheets, Mechanical Data Sheets and System Description listed above under References	The Plant Item Material Selection Data Sheets show that the materials selected for the CXP system vessels take into account the chemistry of the waste and the reagents processed in these equipment items. With two exceptions, all CXP system vessels considered herein are to be constructed using 316 stainless steel (max. 0.030% carbon, dual certified) hereinafter referred to as 316L stainless steel. Vessels (CXP-VSL-00004 & -00005) are to be fabricated from 304 stainless steel (max. 0.030% carbon, dual certified) hereinafter referred to as 304L stainless steel.
	The waste types are compatible with each other.	System Description listed above under References	The system description describes the CXP system operations. During normal ion exchange operations, filtered LAW feed at a pH of about 13 is pumped from the Cs IX Feed Vessel (CXP-VSL-00001) through the Cs IX columns to the Cs IX Treated LAW Collection Vessels (CXP-VSL-00026A/B/C). During these operations, the cesium is stripped from the LAW feed and deposited on the IX resins. The elution process that is used to strip the cesium from the IX resins consists of dilute caustic and demineralized water rinses and the elution sequence using 0.5 M nitric acid. The Cs Reagent Vessel (CXP-VSL-00005) receives similar dilute caustic and nitric acid streams during normal operations. These processes are discussed in the System Description. Caustic rinse liquids are recycled and returned to the Cs IX feed tank. Acid elutants are transferred to the CNP system. Incompatible wastes are separated during normal operations.
Compatibility	Vessel material and protective coatings ensure the vessel structure is adequately protected form the corrosive effects of the waste stream and external environments (expected to not leak or fail for the design life of the system)	Plant Item Material Selection Data Sheets, Mechanical Data Sheets and System Description listed above under References	The Plant Item Material Selection Data Sheets show that the materials selected for the CXP system vessels take into account the chemistry of the waste and the reagents processed in these equipment items. With two exceptions, all CXP system columns and vessels are to be constructed using 316L stainless steel. Vessels (CXP-VSL-00004 & -00005) are to be fabricated from 304L stainless steel. These material selections are correctly carried forward to the column and vessel Mechanical Data Sheets. The materials selected are adequate to provide the required 40 year service life for these vessels.

Corrosion Allowance	Corrosion allowance is adequate for the intended service life of the vessel.	Plant Item Material Selection Data Sheets, Drawings and Mechanical Data Sheets listed above under References; 24590-PTF-3PS-MWD0-T0005, Rev. 0, Engineering Specification for Cesium Ion Exchange Columns	The Plant Item Material Selection Data Sheets list the following corrosion allowances for the CXP system vessels: CXP-VSL-00001, 316L stainless steel, 0.040 in. for 40 years; CXP-VSL-00004 & -00005, 304L stainless steel, 0.040 in. for 40 years; CXP-VSL-00026A/B/C, 316L stainless steel, 0.040 in. for 40 years. These material selections and corrosion allowances assure an adequate service life for the vessels.
Pressure Controls	Pressure controls (vents and relief valves) are adequately designed to ensure pressure relief if normal operating pressures in the vessel are exceeded.	Drawings and System Description listed above under References	The Equipment Assembly drawings show that the CXP system vessel overflow lines are larger than any of the other liquid conveying lines entering the vessels and therefore have adequate flow capacity to preclude overpressure.

Job No. 24590

Bechtel National, Inc.

SUPPLIER DOCUMENT STATUS

1. [X] **Work may proceed.**
2. [ ] **Revise and resubmit. Work may proceed subject to resolution of indicated comments.**
3. [ ] **Revise and resubmit. Work may not proceed.**
4. [ ] **Review not required. Work may proceed.**

Permission to proceed does not constitute acceptance or approval of design details, calculations, analyses, test methods, or materials developed or selected by the supplier and does not relieve supplier from full compliance with contractual obligations.

REVIEWED									
									EJPS BHC

G-321 Document Category N/A
[From Supplement A to G-321-E (E) or G-321-V (V), as applicable, or "N/A" if SSRS is used]

Supersedes BNI Document No. N/A Rev. _____
[When applicable]

Accepted by DC Pfluger (Print Name) DC Pfluger (Signature) 6/2/04 (Date)

Released by N/A (Print Name) _____ (Signature) _____ (Date)
[When applicable]

416 GP&S 7-03

24590-CM-HC4-HXYG-00138-02-00034
REV. 00A

SUBCONTRACT SUBMITTAL

Best Available Copy

R10315962

COGEMA-IA-059, Rev. 0

IQRPE REVIEW – PRETREATMENT FACILITY (PTF) ELEVATION 0'-0" CESIUM ION EXCHANGE PROCESS (CXP) ANCILLARY EQUIPMENT

"I, Douglas W. Hendrickson, have reviewed, and certified a portion of the design of a new tank system or component located at the Hanford Waste Treatment Plant, owned/operated by Department of Energy, Office of River Protection, Richland, Washington. My duties were independent review of the current design for the Pretreatment Facility (PTF) Elevation 0'-0" Cesium Ion Exchange Process (CXP) Ancillary Equipment as required by the Dangerous Waste Regulations, namely, WAC 173-303-640(3) applicable paragraphs, i.e., (a) through (g)."

"I certify under penalty of law that I have personally examined and am familiar with the information submitted in this document and all attachments and that, based on my inquiry of those individuals immediately responsible for obtaining the information, I believe that the information is true, accurate, and complete. I am aware that there are significant penalties for submitting false information, including the possibility of fine and imprisonment."

The documentation reviewed indicate that the design intent fully satisfies the requirements of the WAC.

The attached review is thirteen (13) pages numbered one (1) through thirteen (13).

DOUGLAS W. HENDRICKSON
STATE OF WASHINGTON
33907
REGISTERED PROFESSIONAL ENGINEER

May 2004

EXPIRES 06/10/2005

Signature, P.E.

27 May 2004
Date

24590-CM-HC4-HXYG-00138-02-00034, REV. 00A

STRUCTURAL INTEGRITY ASSESSMENT OF THE PRETREATMENT FACILITY (PTF) ELEVATION 0'-0" CESIUM ION EXCHANGE PROCESS (CXP) ANCILLARY EQUIPMENT

COGEMA-IA-059
REV. 0

Please note that source, special nuclear and byproduct materials, as defined in the Atomic Energy Act of 1954 (AEA), are regulated at the U.S. Department of Energy (DOE) facilities exclusively by DOE acting pursuant to its AEA authority. DOE asserts, that pursuant to the AEA, it has sole and exclusive responsibility and authority to regulate source, special nuclear, and byproduct materials at DOE-owned nuclear facilities. Information contained herein on radionuclides is provided for process description purposes only.

Scope	Scope of this Integrity Assessment	This integrity assessment includes: a. Ancillary Equipment associated with the PTF Cesium Ion Exchange Process Vessels System as shown on drawing 24590-PTF-M6-CXP-P0001, Rev 0; b. Ancillary Equipment associated with the PTF Cesium Ion Exchange Columns System as shown on drawing 24590-PTF-M6-CXP-P0002, Rev 0; c. Ancillary Equipment associated with the PTF Cesium Ion Exchange Columns System as shown on drawing 24590-PTF-M6-CXP-P0003, Rev 0; d. Ancillary Equipment associated with the PTF Cesium Ion Exchange Utilities Services - PSA Rack as shown on drawing 24590-PTF-M6-CXP-P0005, Rev 0; e. Ancillary Equipment associated with the PTF Cesium Ion Exchange Utilities Services Plant Wash Rack as shown on drawing 24590-PTF-M6-CXP-P0007, Rev 0; f. Ancillary Equipment associated with the PTF Cesium Ion Exchange Treated LAW Collection Vessels System as shown on drawing 24590-PTF-M6-CXP-P0010, Rev 0; g. Ancillary Equipment associated with the PTF Cesium Ion Exchange Utilities Services - PSA Rack as shown on drawing 24590-PTF-M6-CXP-P0011, Rev 0; h. Ancillary Equipment associated with the PTF Cesium Ion Exchange Utilities Services - PSA Rack as shown on drawing 24590-PTF-M6-CXP-P0012, Rev 0; i. Ancillary Equipment associated with the PTF Cesium Ion Exchange Utilities Services - Plant Wash Rack as shown on drawing 24590-PTF-M6-CXP-P0013, Rev 0

References	System Description and System Description Change Notices, Drawings – PFD, P&ID, GA, PSAR,	24590-PTF-3YD-CXP-00001, Rev. 0, System Description for the Cesium Ion Exchange Process - System CXP; 24590-PTF-3YN-CXP-00002, System Description Change Notice (SCDN) for System Description Number 24590-PTF-3YD-CXP-00001, Rev. 0; 24590-PTF-M5-V17T-P0012, Rev. 0, Process Flow Diagram, Cesium Ion Exchange Process Vessels System CXP; 24590-PTF-M5-V17T-P0013, Rev. 0, Process Flow Diagram, Cesium Ion Exchange Process Columns System CXP; 24590-PTF-M5-V17T-P0025, Rev. 0, Process Flow Diagram, Cesium Ion Exchange Process Collection Vessels System CXP; 24590-PTF-M6-CXP-P0001, Rev 0, P&ID - PTF Cesium Ion Exchange Process Vessels System; 24590-PTF-M6-CXP-P0002, Rev 0, P&ID - PTF Cesium Ion Exchange Columns System; 24590-PTF-M6-CXP-P0003, Rev 0, P&ID - PTF Cesium Ion Exchange Columns System; 24590-PTF-M6-CXP-P0005, Rev 0, P&ID - PTF Cesium Ion Exchange Utilities Services - PSA Rack; 24590-PTF-M6-CXP-P0007, Rev 0, P&ID - PTF Cesium Ion Exchange Utilities Services Plant Wash Rack; 24590-PTF-M6-CXP-P0010, Rev 0, P&ID - PTF Cesium Ion Exchange Treated LAW Collection Vessels System; 24590-PTF-M6-CXP-P0011, Rev 0, P&ID - PTF Cesium Ion Exchange Utilities Services - PSA Rack; 24590-PTF-M6-CXP-P0012, Rev 0, P&ID - PTF Cesium Ion Exchange Utilities Services - PSA Rack; 24590-PTF-M6-CXP-P0013, Rev 0, P&ID - PTF Cesium Ion Exchange Utilities Services - Plant Wash Rack; 24590-PTF-P1-P01T-P0001, Rev. 3, Pretreatment Facility General Arrangement Plan at EL. 0'-0"; 24590-PTF-P1-P01T-P0003, Rev. 0, Pretreatment Facility General Arrangement Plan at EL. 56'-0"; 24590-WTP-PSAR-ESH-01-002-02, Rev. 1A, Preliminary Safety Analysis Report (PSAR) to Support Construction Authorization; PT Facility Specific Information

References	Mechanical Systems Data Sheets, and Plant Item Material Selection Data Sheets	24590-PTF-MVD-CXP-00007, Rev. 1, Mechanical Systems Data Sheet: Vessel, CXP-VSL-00001; 24590-PTF-MVD-CXP-00015, Rev. 1, Mechanical Systems Data Sheet: Vessel, CXP-VSL-00004; 24590-PTF-MVD-CXP-00016, Rev. 2, Mechanical Systems Data Sheet: Vessel, CXP-VSL-00005; 24590-PTF-MVD-CXP-00021, Rev. 1, Mechanical Systems Data Sheet: Vessel, CXP-VSL-00026A; 24590-PTF-MVD-CXP-00022, Rev. 1, Mechanical Systems Data Sheet: Vessel, CXP-VSL-00026B; 24590-PTF-MVD-CXP-00023, Rev. 1, Mechanical Systems Data Sheet: Vessel, CXP-VSL-00026C; 24590-PTF-MXD-CXP-00011, Rev. A, Mechanical Systems Data Sheet: Process Bulge, CXP-BULGE-00004; 24590-PTF-N1D-CXP-P0001, Rev. 0, Plant Item Material Selection Data Sheet, CXP-VSL-00001, Cesium Ion Exchange Feed Vessel; 24590-PTF-N1D-CXP-P0003, Rev. 0, Plant Item Material Selection Data Sheet, CXP-VSL-00026A/B/C, IX Treated LAW Collection Vessel; 24590-PTF-N1D-CXP-P0007, Rev. 0, Plant Item Material Selection Data Sheet, CXP-VSL-00004, Cs IX Caustic Rinse Collection Vessel; 24590-PTF-N1D-CXP-P0008, Rev. 0, Plant Item Material Selection Data Sheet, CXP-VSL-00005, Cs IX Reagent Vessel

Summary of Assessment

For each item of "Information Assessed" (i.e., Criteria) on the following pages, the items listed under "Source of Information" were reviewed and found to furnish adequate design controls and requirements to assure the design intent fully satisfies the WAC requirements.

Information Assessed		Source of Information	Assessment
Design	Ancillary equipment design standards are appropriate and adequate for the equipment's intended use.	System Description, drawings, and material selection sheets listed above under References; 24590-WTP-DC-PS-01-001, Rev 2, Pipe Stress Design Criteria including "Pipe Stress Criteria" and "Span Method Criteria"; ASME B31.3 Code, Process Piping, 1996 Edition, American Society of Mechanical Engineers; 24590-WTP-PER-M-02-002, Rev 1, Materials for Ancillary Equipment; 24590-WTP-PSAR-ESH-01-002-02, Rev. 1A, Preliminary Safety Analysis Report (PSAR) to Support Construction Authorization; PT Facility Specific Information; 24590-WTP-MX00-TP001, Rev. 1, Process Bulge Design and Fabrication	The Pipe Stress Design Criteria document identifies ASME B31.3 as the design code for piping systems of the WTP. Seismic Categories and Quality Levels vary among the ancillary equipment components. While each of the vessels, ion exchange columns, ion exchange feed pumps and feed heat exchangers are Seismic Category I (SC-I) and Quality Level 1 (QL-1), the other ancillary equipment is predominantly SC-II/QL-2 or SC-III/Commercial Material grade (CM). Guiding characteristics of these assignments are that black cell equipment and ion exchange feed, discharge, and emergency elution are classed as SC-I/Q-1 while the lower design standards are applied to decreasingly radioactive or non-radioactive service and readily replaceable equipment within the hot cell. RFDs and PJMs are SC-II/QL-2. The hydrogen mitigation portions of the ancillary equipment, including RFD/PJM ejector nozzles and air piping crossing into the C3 area are SDC and will be SC-I/QL-1, including the purge supply and discharge as are the piping and fittings for delivery of emergency elution reagents from CXP-VSL-00005 as shown on P&ID 24590-PTF-M6-CXP-P0001. Implicit hydrogen mitigation portions of the ancillary equipment include breakpots which allow gas liquid separations as shown for the ion exchange effluents in Zone A4 of P&ID 24590-PTF-M6-CXP-P0002. Break pots are ancillary equipment and must comply with established material standards and service. Some transfer routes apply the vessels as breakpots. The Seismic Categories are explained in detail in the Pipe Stress Design Criteria document. Bulge design and fabrication standards for SC I & II equipment are addressed in 24590-WTP-MX00-TP001. Quality Levels are discussed in the PSAR. These codes and standards are acceptable and adequate for the design of the ancillary equipment and secondary containment (bulge) for the intended service.

Information Assessed		Source of Information	Assessment
	If the ancillary equipment to be used is not built to a design standard, the design calculations demonstrate sound engineering principles of construction.	24590-WTP-DC-PS-01-001, Rev 2, Pipe Stress Design Criteria including "Pipe Stress Criteria" and "Span Method Criteria"; 24590-WTP-MX00-TP001, Rev. 1, Process Bulge Design and Fabrication; 24590-WTP-3PS-PF00-T0001, Rev. 1, Engineering Specification for Process Jumper Fabrication for PT and HLW; 24590-PTF-M6-CXP-P0003, Rev 0, P&ID - PTF Cesium Ion Exchange Columns System; 24590-PTF-MXD-CXP-00011, Rev. A, Mechanical Systems Data Sheet: Process Bulge, CXP-BULGE-00004.	The ancillary equipment is built to design and fabrication standards. The Pipe Stress Design Criteria document specifies that piping is to be designed in accordance with ASME B31.3. Jumpers are to be designed and fabricated in accord with ASME B31.3 as well as structural welding codes of AWS D1.1 and D1.6 subject to ASME B&PV Code Section IX welding and brazing certification and Section V non-destructive examination. The Bulge Mechanical Systems Data sheet and P&ID 24590-PTF-M6- CXP-P0003 indicate bulge construction is to QL-2 and SC-II of 0.25" 316L Stainless Steel with washdown nozzles and demineralized water supply for decontamination and a 316L drain line to the C5 Drain Collection Header; 24590-WTP-MX00-TP001, the P&ID, and the mechanical data sheet demonstrate sound engineering principles in the design intent of the bulges.

Information Assessed		Source of Information	Assessment
Design	Ancillary equipment has adequate strength at the end of its design life to withstand the operating pressure, operating temperature, thermal expansion, and seismic loads. Equipment is protected against physical damage and excessive stress due to settlement, vibration, expansion, or contraction.	Drawings listed above under References; 24590-WTP-DC-PS-01-001, Rev 2, Pipe Stress Design Criteria including "Pipe Stress Criteria" and "Span Method Criteria"; Uniform Building Code (UBC), 1997 Edition, International Conference of Building Officials; ASME Boiler and Pressure Vessel Code, Section III, Rules for Construction of Nuclear Facility Components, Division 1, Subsection NC, Appendix N and Appendix F, 1995; 24590-WTP-VV-PS-01-001, Rev. 2, Verification and Validation Report for ME101, Linear Elastic Analysis of Piping, Version N8	The Pipe Stress Design Criteria document requires the use of the ASME B31.3 Code for piping design. ASME B31.3 requires explicit consideration of many loadings including operating pressure, operating temperature, thermal expansion/contraction, settlement, vibration, and corrosion allowance in the design of piping. Elements of the ASME B&PV Code, Section III, Division 1, Subsection NC, Appendix N and Appendix F are used to supplement the requirements of ASME B31.3 for seismic design of SC-I/SC-II piping. ASME B&PV Code, Section III, Division 1, Subsection NC and Appendix F, and the Uniform Building Code (UBC) are used to supplement the requirements of ASME B31.3 for seismic design of SC-III/SC-IV piping for this ancillary equipment regarding portions of the plant wash racks PWD-RK-00007, and -00009, and treated LAW feed pump subsystems of the P&IDs as these components are designed as commercial grade SC-III. Details of the seismic design methods are discussed in the Pipe Stress Design Criteria document. Design is by hand calculations and computer codes that have been tested and approved as discussed in the Verification and Validation Report for ME101, Linear Elastic Analysis of Piping, Version N8. These are adequate and appropriate codes and standards to ensure that the ancillary equipment will have adequate strength at end of design life to withstand all anticipated loadings.

Information Assessed		Source of Information	Assessment
Supports	Ancillary equipment supports are adequately designed.	Drawings - see references above; 24590-WTP-DC-PS-01-002, Rev 2, Pipe Support Design Criteria; 24590-WTP-PER-PS-02-001, Rev. 4, Ancillary Equipment Pipe Support Design; ASME B31.3 Code, Process Piping, 1996 Edition, American Society of Mechanical Engineers; ASME Boiler and Pressure Vessel Code, Section III, Rules for Construction of Nuclear Facility Components, Division 1, Subsection NF and Appendix F, 1995; 24590-WTP-PL-PS-01-001, Rev 1, Verification and Validation Test Plan for Bechtel's ME150 Pipe Support Family of Programs (PCFAPPS)	The Pipe Support Design Criteria considers all load types identified in ASME B31.3 and utilizes ASME Section III, Division 1, Subsection NF and Appendix F to supplement the requirements of ASME B31.3 for seismic design of SC-I/II and SC-III/IV pipe supports. Bounding load cases are passed to the pipe support designers from the results of the ancillary equipment piping stress analyses. Details of the seismic design methodology are discussed in the Pipe Support Design Criteria document. Analysis is by manual calculation and computer programs that have been tested and approved as discussed in the Verification and Validation Test Plan for Bechtel's ME150 Pipe Support Family of Programs (PCFAPPS). The Ancillary Equipment Pipe Support Design document shows examples of typical equipment supports. These are appropriate codes and standards for design of the CXP system ancillary equipment supports. Ancillary equipment supports are to be designed to allow a minimum of heat to be transferred to the building structures (building structures not to exceed 150 °F for concrete and 200 °F for steel). Design standards for vessel internal equipment supports are discussed in the integrity assessment for the CXP system vessels.

Information Assessed		Source of Information	Assessment
Connections	Seams and connections are adequately designed.	24590-WTP-DB-ENG-01-001, Rev 1A, Basis of Design; 24590-WTP-DC-PS-01-001, Rev. 2, Pipe Stress Design Criteria including "Pipe Stress Criteria" and "Span Method Criteria"; ASME Boiler and Pressure Vessel Code, Section V, Nondestructive Examination; ASME Boiler and Pressure Vessel Code, Section IX, Welding and Brazing Qualifications; ASME/ANSI B16.5, 1988 Edition, Piping Flanges and Flanged Fittings; 24590-WTP-PER-PL-02-001, Rev. 5, Piping Material Class Description; 24590-WTP-3PS-PS02-T00001, Rev. 2, Shop Fabrication of Piping; 24590-WTP-MX00-TP001, Rev. 1, Process Bulge Design and Fabrication	The Basis of Design states that in-cell piping that is non-maintainable will be fully welded. The Pipe Stress Design Criteria document specifies the ASME B31.3 Process Piping design code for the piping systems. Welding is to be performed in accordance with the requirements of ASME B31.3 and the ASME B&PV Code, Section IX. Flange connections are to be designed in accordance with ANSI B16.5 as called out by piping material class. Process piping within bulges is designed and fabricated in accord with *Shop Fabrication of Piping* which requires welding to standards of ASME B&PV Section IX, and inspected in accord with visual, liquid penetrant, and radiographic test methods of ASME B&PV Section V as appropriate. Bulges are required to be welded to standards of ASME B&PV Section IX, and inspected in accord with visual, liquid penetrant, and radiographic test methods of ASME B&PV Section V as appropriate. These are appropriate codes and standards for design and fabrication of the CXP system ancillary equipment and bulge as secondary containment.
Supports	The system will withstand the effects of frost heave.	System Description and SDCN listed above under References; 24590-WTP-DC-ST-01-001, Rev. 2, Structural Design Criteria	The ancillary equipment associated with the CXP system considered in this assessment is located in above grade bulges, hot cells and black cells inside the Pretreatment Facility. The Structural Design Criteria requires that all structural foundations shall extend into the surrounding soil below the frost line to preclude frost heave. The frost line is 30 in. below grade. The PTF building foundations are not subject to frost heave; therefore, the ancillary equipment located inside the building is not subject to frost heave.

Information Assessed		Source of Information	Assessment
Waste Characteristics	Characteristics of the waste to be stored or treated have been identified (ignitable, reactive, toxic, specific gravity, vapor pressure, flash point, temperature)	24590-WTP-PSAR-ESH-01-002-02, Rev. 1A, Preliminary Safety Analysis Report (PSAR) to Support Construction Authorization; PT Facility Specific Information; System Description and SDCN and Process Flow Diagrams and material selection data sheets listed above under References	The PSAR provides a summary of potential hazardous conditions associated with each CXP vessel and the associated ancillary equipment. Design provisions for control of these hazards are listed in the PSAR and the individual System Descriptions. The CXP System Description identifies the safety functions for ancillary equipment to include providing primary confinement of the wastes during normal operations, upset conditions and during and after a SC-II Design Basis Seismic Event, providing sufficient agitation and/or ventilation to prevent hydrogen accumulation/storage in the waste or ion exchange columns, and providing secondary confinement elements (including ventilation) to SC-I. Ancillary equipment associated with the Cesium Ion Exchange Vessels (CXP-VSL-00001, -00004, -00005, and -00026A/B/C) and IX columns (CXP-IXC-00001/2/3/4) handle caustic and acidic liquors, resin slurries, and vessel ventilation gases. The primary function of the ancillary equipment associated with the CXP System is to provide a primary pressure and fluid boundary to protect facility workers from the hazardous materials in the vessel transfer and treatment streams and vessel ventilation stream and to provide for hydrogen mitigation.

Information Assessed		Source of Information	Assessment
Waste Characteristics	Ancillary equipment is designed to handle the wastes with the characteristics defined above and any treatment reagents.	System Description and SDCN, and material selection data sheets listed above under References; 24590-WTP-PER-M-02-002, Rev 1, Materials for Ancillary Equipment; 24590-WTP-PER-PL-02-001, Rev. 5, Piping Material Class Description; 24590-PTF-M6-CXP-P0003, Rev 0, P&ID - PTF Cesium Ion Exchange Columns System; 24590-PTF-MXD-CXP-00011, Rev. A, Mechanical Systems Data Sheet: Process Bulge, CXP-BULGE-00004	The System Description indicates that the CXP system Cesium Ion Exchange (IX) vessels and IX columns process and store caustic waste and slurries of organic resin, demineralized water, sodium hydroxide solutions, and nitric acid solutions. No other reagents are added to this system during normal operations although the piping provides recirculatory sampling capability following each ion exchange column. The Materials for Ancillary Equipment document requires that the material selection and corrosion/erosion allowances for ancillary equipment in contact with the waste will be equal to or better than the material and corrosion allowance of the waste source vessels except as noted therein. The CXP vessels and nozzles are fabricated of 316L stainless steel with the exception of CXP-VSL-00004 & -00005 which are fabricated of 304L stainless steel. The Piping Material Class Description lists 316L stainless steel as the material selection for the CXP system ancillary equipment. The Bulge Mechanical Systems Data sheet indicates bulge construction is to QL-2 /SC-II of 0.25" 316L Stainless Steel and the P&ID specifies the drain line of 316L; the P&ID and the mechanical data sheet demonstrate sound engineering principles in the design intent of the bulge to handle the waste and reagent characteristics for which it is intended.

Information Assessed		Source of Information	Assessment
Compatibility	The pH range of the waste, waste temperature and the corrosion behavior of the structural materials are adequately addressed. Ancillary equipment material and protective coatings ensure the ancillary equipment structure is adequately protected from the corrosive effects of the waste stream and external environments. The protection is sufficient to ensure the equipment will not leak or fail for the design life of the system.	System Description, SDCN, and material selection data sheets listed above under References; 24590-WTP-DB-ENG-01-001, Rev 1A, Basis of Design; 24590-WTP-PER-M-02-002, Rev 1, Materials for Ancillary Equipment; 24590-WTP-3PS-NN00-T0001, Rev 0, Engineering Specification for Hot and Anti-Sweat Thermal Insulation; 24590-WTP-3PS-PF00-T0001, Rev. 1, Engineering Specification for Process Jumper Fabrication for PT and HLW	The Basis of Design identifies a service design life of 40 years for the ancillary equipment. All non-maintainable items will be designed to last the life of the facility. Detailed material selection (corrosion) analyses were conducted for the Cesium Ion Exchange Process vessels and Ion exchange columns in the PT facility process design. The Materials for Ancillary Equipment document requires that the material selection and corrosion/erosion allowances for ancillary equipment (including jumpers) in contact with the waste will be equal to or better than the material and corrosion allowance of the waste source vessels except as noted therein. The Thermal Insulation specification requires that all insulating materials used on the outside of ancillary equipment be pre-approved for use on austenitic stainless steel in accordance with applicable ASTM procedures and tests to preclude external corrosion of ancillary equipment. Corrosion allowances are considered for all ancillary equipment, therefore, the ancillary equipment will provide the expected design service life.

Information Assessed		Source of Information	Assessment
Corrosion Allowance	Corrosion allowance is adequate for the intended service life of the ancillary equipment.	Drawings listed above under References; 24590-WTP-DC-PS-01-001, Rev. 2, Pipe Stress Design Criteria including "Pipe Stress Criteria" and "Span Method Criteria"; 24590-WTP-DB-ENG-01-001, Rev 1A, Basis of Design; 24590-WTP-PER-M-02-002, Rev 1, Materials for Ancillary Equipment; 24590-WTP-PER-PL-02-001, Rev. 5, Piping Material Class Description	The Pipe Stress Design Criteria document requires use of the ASME B31.3 Code for ancillary equipment design. Consideration of corrosion, including corrosion allowance, is a mandatory requirement of ASME B31.3. A required service design life of 40 years is identified in the Basis of Design for ancillary equipment located in inaccessible process cells. Detailed material selection (corrosion) analyses are conducted for each vessel and major components in the CXP system in the PT Facility during process design. The Materials for Ancillary Equipment document requires that downstream ancillary equipment is to be constructed of equal or better materials than the source vessel, and with the same corrosion allowance as the source vessel except as noted therein. Bounding corrosion allowances are listed for each piping material class in the Piping Material Class Description document. The corrosion/erosion allowance for the 316L stainless steel CXP system ancillary equipment piping specifications is 0.040 in. and is appropriate for the intended service.
Strength	Pressure controls (vents and relief valves) are adequately designed to ensure pressure relief if normal operating pressures in the vessels are exceeded.	Drawings listed above under References; 24590-WTP-DC-PS-01-001, Rev. 2, Pipe Stress Design Criteria including "Pipe Stress Criteria" and "Span Method Criteria"; 24590-WTP-PER-PL-02-001, Rev. 5, Piping Material Class Description	The Pipe Stress Design Criteria document specifies use of ASME B31.3 as the design code for the WTP piping. ASME B31.3 requires provision be made to safely contain or relieve any pressure to which the piping may be subjected. ASME B31.3 piping not protected by a pressure relieving device, or that can be isolated from a pressure reliving device must be designed for at least the highest pressure that can be developed. Bounding pressure and temperature limits are listed for each of the piping material classes in the Piping Material Class Description document. Ion exchange columns, operated with pressurized air purge systems are also mounted with SC-I/QL-1 rupture disks.

Information Assessed		Source of Information	Assessment
	Maximum flows and any unusual operating stresses are identified	Drawings listed above under References; 24590-WTP-DC-PS-01-001, Rev 2, Pipe Stress Design Criteria including "Pipe Stress Criteria" and "Span Method Criteria"; 24590-WTP-PER-PL-02-001, Rev. 5, Piping Material Class Description	The expected flow paths for the ancillary equipment are identified on the P&ID drawings. The Pipe Stress Design Criteria document specifies the ASME B31.3 code for piping design. This code requires piping to be designed to the highest pressure that can be developed in a piping system assuring that maximum operating stresses remain within code allowables. The Piping Material Class Description document lists the bounding pressure and temperature limits for each piping material class.
Secondary Containment	Ancillary equipment is designed with secondary containment that is constructed of materials compatible with the waste and of sufficient strength to prevent failure (pressure gradients, waste, climatic conditions, daily operations), provided with a leak-detection system, and designed to drain and remove liquids.	Drawings, System Description and SDCN listed above under References; 24590-WTP-MX00-TP001, Rev. 1, Process Bulge Design and Fabrication; 24590-PTF-MXD-CXP-00011, Rev. A, Mechanical Systems Data Sheet: Process Bulge, CXP-BULGE-00004	The ancillary equipment considered in this assessment is located in above grade process (black and hot) cells and a bulge. The Cesium Ion Exchange Process system vessels are housed at EL 0' (CXP-VSL-00005, due to service, is elevated to support gravity feed for emergency elution) in the black cells P-0111 and P-0114 in the north-west and north-central zones of the PT Facility with IX feed and Treated LAW feed pumps, heat exchangers, primary jumpers, and piping adjacent to the black cell within the hot cell P-0123. The Process bulge CXP-BULGE-00004, which houses pipe valving outside of the hot and black cells for the feed and elution streams is present in Room P-0317 on Elevation 56' 0", and constitutes secondary containment for the piping, valves, and fittings. The bulge is to be fabricated of 0.25" 316L SS, compatible with the waste materials, and a 316L SS floor drain and line which routes liquids into the C5 (black and hot cell) collection header. The air supply bulge for hydrogen mitigation is present on EL 77', but is not present on the P&IDs, is not reviewed within the scope of this assessment, and is not intended to be a regulated portion of the plant. Secondary containment for ancillary equipment within the cells is provided by the liners and sumps as appropriate and is outside the scope of this integrity assessment.

24590-CM-HC4-HXYG-00138	- 02 - 00035	00C
PO/SCT	**Submittal**	**Rev**

Job No. 24590

Bechtel National, Inc.

SUPPLIER DOCUMENT STATUS

1. [X] **Work may proceed.**
2. [ ] **Revise and resubmit. Work may proceed subject to resolution of indicated comments.**
3. [ ] **Revise and resubmit. Work may not proceed.**
4. [ ] **Review not required. Work may proceed.**

Permission to proceed does not constitute acceptance or approval of design details, calculations, analyses, test methods, or materials developed or selected by the supplier and does not relieve supplier from full compliance with contractual obligations.

REVIEWED									

G-321 Document Category N/A
[From Supplement A to G-321-E (E) or G-321-V (V), as applicable, or "N/A" if SSRS is used]

Supersedes BNI Document No. N/A Rev. _____
[When applicable]

Accepted by DC Pfleger D C Pfleger 10/6/04
Print Name Signature Date

Released by N/A
[When applicable] Print Name Signature Date

1PU406 34 7 04

SUBCONTRACT SUBMITTAL

Best Available Copy

R10397282

IQRPE REVIEW
OF
PRETREATMENT FACILITY (PTF) ELEVATION 0'- 0" PRETREATMENT VESSEL VENT PROCESS SYSTEM (PVP) ANCILLARY EQUIPMENT

"I, Tarlok S. Hundal, have reviewed, and certified a portion of the design of a new tank system or component located at the Hanford Waste Treatment Plant, owned/operated by Department of Energy, Office of River Protection, Richland, Washington. My duties were independent review of the current design for the Pretreatment Facility (PTF) Elevation 0'-0" Pretreatment Vessel Vent Process System (PVP) Ancillary Equipment as required by the Dangerous Waste Regulations, namely, WAC 173-303-640(3) applicable paragraphs, i.e., (a) through (g)."

"I certify under penalty of law that I have personally examined and am familiar with the information submitted in this document and all attachments and that, based on my inquiry of those individuals immediately responsible for obtaining the information, I believe that the information is true, accurate, and complete. I am aware that there are significant penalties for submitting false information, including the possibility of fine and imprisonment."

The documentation reviewed indicates that the design intent fully satisfies the requirements of the WAC.

The attached review is nine (9) pages numbered one (1) through nine (9).

TARLOK SINGH HUNDAL
STATE OF WASHINGTON
20213
REGISTERED
PROFESSIONAL ENGINEER

EXPIRES: 02/15/06

Signature

10/5/04
Date

24590-CM-HC4-HXY01-00188-02-00035 REV 00C

STRUCTURAL INTEGRITY ASSESSMENT OF THE PRETREATMENT FACILITY (PTF) ELEVATION 0'- 0" PRETREATMENT VESSEL VENT PROCESS SYSTEM (PVP) ANCILLARY EQUIPMENT

COGEMA-IA-060
REV. 2

Please note that source, special nuclear and byproduct materials, as defined in the Atomic Energy Act of 1954 (AEA), are regulated at the U.S. Department of Energy (DOE) facilities exclusively by DOE acting pursuant to its AEA authority. DOE asserts, that pursuant to the AEA, it has sole and exclusive responsibility and authority to regulate source, special nuclear, and byproduct materials at DOE-owned nuclear facilities. Information contained herein on radionuclides is provided for process description purposes only.

Scope	Scope of this Integrity Assessment	This Integrity Assessment includes the ancillary equipment relating to PTF-PVP system. The PVP interfaces with numerous plant process systems and their associated plant items and vent lines as shown on drawing 24590-PTF-M6-PVP-P0002. These plant items and vent lines are located in different rooms/cells of the PTF.
References	Drawings and System Description	Drawings: 24590-PTF-M6-PVP-P0002, Rev. 2, P&ID – PTF Pretreatment Vessel Vent Process System Exhaust from Vessels. 24590-PTF-P1-P01T-P0001, Rev. 4, Pretreatment Facility General Arrangement Plan at El. 0'-0"; 24590-PTF-P1-P01T-P0002, Rev. 2, Pretreatment Facility General Arrangement Plan at El. 28' -0"; 24590-PTF-P1-P01T-P0006, Rev. 2, Pretreatment Facility General Arrangement Plan at El.(-) 45'-0"; 24590-PTF-P1-P01T-P0007, Rev. 5, Pretreatment Facility General Arrangement Sect. A-A; 24590-PTF-P1-P01T-P0008, Rev. 5, Pretreatment Facility General Arrangement Sect. B-B; 24590-PTF-P1-P01T-P0009, Rev. 8, Pretreatment Facility General Arrangement Sect. C-C; 24590-PTF-P1-P01T-P0010, Rev. 5, Pretreatment Facility General Arrangement Sect. D-D; 24590-PTF-P1-P01T-P0016, Rev. 5, Pretreatment Facility General Arrangement Sect. P-P and Sect. Q-Q; 24590-PTF-P1-P01T-P0017, Rev. 5, Pretreatment Facility General Arrangement Sect. R-R. System Description: 24590-PTF-3YD-PVP-00001, Rev. 0, System Description for Pretreatment Vessel Vent Process System, PVP.
Summary of Assessment		For each item of "Information Assessed" (i.e., Criteria) on the following pages, the items listed under "Source of Information" were reviewed and found to furnish adequate design controls and requirements to ensure the design intent fully satisfies the requirements of Washington Administrative Code, WAC-173-303-640, *Dangerous Waste Regulations* for Tank Systems.

	Information Assessed	Source of Information	Discussion
Design	Ancillary equipment design standards are appropriate and adequate for the equipment's intended use.	Drawings listed above under References; 24590-WTP-DC-PS-01-001, Rev. 3, Pipe Stress Design Criteria including "Pipe Stress Criteria" and "Span Method Criteria"; ASME B31.3 Code, Process Piping, 1996 Edition, American Society of Mechanical Engineers; 24590-WTP-PSAR-ESH-01-002-02, Rev. 1a, Preliminary Safety Analysis Report (PSAR) to Support Construction Authorization: PT Facility Specific Information.	The Pipe Stress Design Criteria document identifies ASME B31.3 as the design code for piping systems for the WTP. The P& ID drawing identifies the varying Seismic Categories and Quality Levels of the ancillary equipment components. To ensure continued function during normal operations, abnormal operations, and during and after a Design Basis Earthquake, the design requirements for all various Seismic Categories (SC-I, II, III, and IV) are discussed in detail in the Pipe Stress Design Criteria document. The Quality Levels are discussed in the PSAR. The above listed design criteria, codes, and standards are acceptable and adequate for the design of the ancillary equipment for its intended use.
	If the ancillary equipment to be used is not built to a design standard, the design calculations demonstrate sound engineering principles of construction.	ASME B31.3 Code, Process Piping, 1996 Edition, American Society of Mechanical Engineers; 24590-WTP-DC-PS-01-001, Rev. 3, Pipe Stress Design Criteria including "Pipe Stress Criteria" and "Span Method Criteria."	The ancillary equipment is built to design standards. The Pipe Stress Design Criteria document specifies that piping is to be designed in accordance with ASME B31.3 Code.

	Information Assessed	Source of Information	Discussion
Design	Ancillary equipment has adequate strength at the end of its design life to withstand the operating pressure, operating temperature, thermal expansion, and seismic loads. Equipment is protected against physical damage and excessive stress due to settlement, vibration, expansion, or contraction.	24590-WTP-DC-PS-01-001, Rev 3, Pipe Stress Design Criteria including "Pipe Stress Criteria" and "Span Method Criteria"; ASME B31.3 Code, Process Piping, 1996 Edition, American Society of Mechanical Engineers; ASME Boiler and Pressure Vessel Code, Section III, Rules for Construction of Nuclear Facility Components, Division 1, Code Case N-411, Subsection NC, Appendix N, and Appendix F, 1995; 24590-WTP-VV-PS-01-001, Rev. 2, Verification and Validation Report for ME101, Linear Elastic Analysis of Piping, Version N8; 24590-WTP-DB-ENG-01-001, Rev. 1B, Basis of Design; 24590-WTP-PER-M-02-002, Rev. 1, Materials for Ancillary Equipment; DOE-STD-1020-94, Natural Phenomenon Hazards Design Evaluation Criteria for Department of Energy Facilities (including Change Notice #1, January 1996); UBC, Uniform Building Code, 1997 Edition.	The Basis of Design document specifies that mechanical equipment is to be designed for a nominal plant life of 40 years. The Materials for Ancillary Equipment document specifies that ancillary equipment downstream of a waste source vessel or miscellaneous plant items is to be constructed of the same or better material and with the same corrosion allowance as the source vessel or plant items, unless the service seen in the downstream line warrants a different material, corrosion allowance, or other modification. The Pipe Stress Design Criteria requires the use of the ASME B31.3 Code and DOE-STD-1020-94 Standard, for piping design. ASME B31.3 requires explicit consideration of operating pressure, operating temperature, thermal expansion and contraction, settlement, vibration, and corrosion allowance in the design of piping. ASME BPV Code, Section III, Code Case N-411, Subsection NC, Appendix N, and Appendix F, and the Uniform Building Code (UBC) are used to supplement the requirements of ASME B31.3 and DOE-STD-1020-94 for design as applicable to the appropriate Seismic Category of the ancillary equipment. Details of the seismic design methods are discussed in the Pipe Stress Design Criteria document. These are appropriate and adequate codes and standards to ensure that the ancillary equipment has adequate strength at the end of its design life to withstand all anticipated loads.

	Information Assessed	Source of Information	Discussion
Supports	Ancillary equipment supports are adequately designed.	Drawings listed above under References; 24590-WTP-DC-PS-01-002, Rev. 2, Pipe Support Design Criteria; 24590-WTP-PER-PS-02-001, Rev. 4, Ancillary Equipment Pipe Support Design; ASME B31.3 Code, Process Piping, 1996 Edition, American Society of Mechanical Engineers; ASME Boiler and Pressure Vessel Code, Section III, Rules for Construction of Nuclear Facility Components, Division 1, Subsection NF and Appendix F, 1995; 24590-WTP-PL-PS-01-001, Rev. 1, Verification and Validation Test Plan for Bechtel's ME150 Pipe Support Family of Programs (PCFAPPS).	The Pipe Support Design Criteria considers all load types identified in ASME B31.3 and utilizes ASME Section III, Division 1, Subsection NF and Appendix F to supplement the requirements of ASME B31.3 for seismic design of SC-I/II and SC-III/IV pipe supports. Bounding load cases are passed to the pipe support designers from the results of the ancillary equipment piping stress analyses. Details of the seismic design methodology are discussed in the Pipe Support Design Criteria document. Analysis is by manual calculation and computer programs that have been tested and approved as discussed in the Verification and Validation Test Plan for Bechtel's ME150 Pipe Support Family of Programs. The Ancillary Equipment Pipe Support Design document shows examples of typical equipment supports. Ancillary equipment supports are to be designed in such a way that the heat transferred from supports to the building structure does not raise the building structure temperature to exceed 150°F for concrete and 200°F for steel. These are appropriate codes and standards for design of the PVP system ancillary equipment supports.
Connections	Seams and connections are adequately designed.	24590-WTP-DB-ENG-01-001, Rev. 1B, Basis of Design; ASME B31.3 Code, Process Piping, 1996 Edition, American Society of Mechanical Engineers; 24590-WTP-DC-PS-01-001, Rev. 3, Pipe Stress Design Criteria including "Pipe Stress Criteria" and "Span Method Criteria"; ASME Boiler and Pressure Vessel Code, Section IX, Welding and Brazing Qualifications; ASME/ANSI B16.5, 1988 Edition, Piping Flanges and Flanged Fittings.	The Basis of Design states that in-cell piping that is non-maintainable will be fully welded. The Pipe Stress Design Criteria document specifies the ASME B31.3 Process Piping design code for the piping systems. Welding is to be performed in accordance with the requirements of ASME B31.3 and the ASME B&PV Code, Section IX. Flange connections are to be designed in accordance with ANSI B16.5. These are appropriate codes and standards for design and fabrication of the PVP system ancillary equipment seams and connections.

	Information Assessed	Source of Information	Discussion
Frost Heave	The system will withstand the effects of frost heave.	Drawings and System Description listed above under References; 24590-WTP-DC-ST-01-001, Rev. 3, Structural Design Criteria.	The ancillary equipment associated with the PVP system considered in this assessment is located in the central hot cell and process cells inside the PTF Facility. The Structural Design Criteria requires that all structural foundations shall extend into the surrounding soil below the frost line to preclude frost heave. The frost depth line is 30 in. below grade. The PTF building foundation mat is an 8 ft thick concrete slab, is not subject to frost heave; therefore, the ancillary equipment located inside the building is not subject to frost heave either.
Waste Characteristics	Characteristics of the waste to be stored or treated have been identified (ignitable, reactive, toxic, specific gravity, vapor pressure, flash point, temperature)	Drawings and System Description listed above under References; 24590-WTP-PER-03-002, Rev. 1, Toxic Vapors and Emissions from WTP Tank Systems and Miscellaneous Treatment Unit Systems; 24590-WTP-PER-03-001, Rev. 1, Prevention of Hydrogen Accumulation in WTP Tank Systems and Miscellaneous Treatment Unit Systems.	The PVP System Description identifies the only safety function for the offgas lines and headers shown on the P&ID drawing as providing primary confinement of the vessel offgas wastes during normal operations, abnormal operations and during and after a Design Basis seismic event. These functions are discussed with respect to vapors and emissions of acutely or chronically toxic (upon inhalation) extremely hazardous waste in the Toxic Vapors and Emissions document. Similar discussions are provided in the Prevention of Hydrogen Accumulation document with respect to ancillary equipment functions related to maintaining hydrogen concentrations below lower flammability limits during normal operations, abnormal operations and during and after a design level seismic event.

	Information Assessed	Source of Information	Discussion
Waste Characteristics	Ancillary equipment is designed to handle the wastes with the characteristics defined above and any treatment reagents.	System Description listed above under References; 24590-WTP-PER-M-02-002, Rev. 1, Materials for Ancillary Equipment; 24590-WTP-PER-PL-02-001, Rev. 5, Piping Material Class Description.	The System Description identifies that additional reagents are not added to the PVP system ancillary equipment during normal operations. The PVP system offgas lines and headers provide for collection of vessel offgas from selected vessels to form an offgas stream. There is a potential for solids deposition in these lines from aerosols or from the formation of ammonium nitrate. The lines and headers are provided with flushing capability and are sloped to drain to provide for cleanout of any solids deposits. The Materials for Ancillary Equipment document requires that the material selection and corrosion/erosion allowances for ancillary equipment in contact with the waste will be equal to or better than the material and corrosion allowance of the waste source vessels except as noted therein. The offgas lines and headers are to be fabricated of 316L stainless steel as shown in the Piping Material Class Description document.

	Information Assessed	Source of Information	Discussion
Compatibility	The pH range of the waste, waste temperature and the corrosion behavior of the structural materials are adequately addressed. Ancillary equipment material and protective coatings ensure the ancillary equipment structure is adequately protected from the corrosive effects of the waste stream and external environments. The protection is sufficient to ensure the equipment will not leak or fail for the design life of the system.	System Description and listed above under References; 24590-WTP-DB-ENG-01-001, Rev.1B, Basis of Design; 24590-WTP-PER-M-02-002, Rev. 1, Materials for Ancillary Equipment; 24590-WTP-3PS-NN00-T0001, Rev 0, Engineering Specification for Hot and Anti-Sweat Thermal Insulation; Annual Book of ASTM Standards, American Society of Testing and Materials.	The Basis of Design identifies a service design life of 40 years for the ancillary equipment. All non-maintainable items will be designed to last the life of the facility. Detailed material selection (corrosion) analyses are conducted for each vessel and major components in the PVP system in the PTF facility during process design. The Materials for Ancillary Equipment document requires that the material selection and corrosion/erosion allowances for ancillary equipment in contact with the waste will be equal to or better than the material and corrosion allowance of the waste source vessels and PVP system components except as noted therein. The Thermal Insulation specification requires that all insulating materials used on the outside of ancillary equipment be pre-approved for use on austenitic stainless steel in accordance with applicable ASTM procedures and tests to preclude external corrosion of ancillary equipment. Both internal and external corrosion has been considered for all ancillary equipment, therefore, the ancillary equipment will provide the expected design service life.

	Information Assessed	Source of Information	Discussion
Corrosion Allowance	Corrosion allowance is adequate for the intended service life of the ancillary equipment.	Drawings listed above under References; 24590-WTP-DC-PS-01-001, Rev. 3, Pipe Stress Design Criteria including "Pipe Stress Criteria" and "Span Method Criteria"; 24590-WTP-DB-ENG-01-001, Rev. 1B, Basis of Design; 24590-WTP-PER-M-02-002, Rev. 1, Materials for Ancillary Equipment; 24590-WTP-PER-PL-02-001, Rev. 5, Piping Material Class Description.	The Pipe Stress Design Criteria document requires use of the ASME B31.3 Code for ancillary equipment design. Consideration of corrosion, including corrosion allowance, is a mandatory requirement of ASME B31.3. A required service design life of 40 years is identified in the Basis of Design for ancillary equipment located in inaccessible process cells. Detailed material selection (corrosion) analyses are conducted for each vessel and major components in the PVP system in the PTF Facility during process design. The Materials for Ancillary Equipment document requires that downstream ancillary equipment is to be constructed of equal or better material than the source vessel, and with the same corrosion allowance as the source vessel except as noted therein. Bounding corrosion allowances are listed for each piping material class in the Piping Material Class Description document. The corrosion/erosion allowance for the 316L stainless steel PVP system ancillary equipment is 0.040 in. The material and corrosion allowance are appropriate and adequate for the intended service life of the ancillary equipment.
Strength	Pressure controls (vents and relief valves) are adequately designed to ensure pressure relief if normal operating pressures in the vessels are exceeded.	Drawings listed above under References; 24590-WTP-DC-PS-01-001, Rev. 3, Pipe Stress Design Criteria including "Pipe Stress Criteria" and "Span Method Criteria"; 24590-WTP-PER-PL-02-001, Rev. 5, Piping Material Class Description.	The Pipe Stress Design Criteria document specifies use of ASME B31.3 as the design code for the WTP piping. ASME B31.3 requires provision be made to safely contain or relieve any pressure to which the piping may be subjected. ASME B31.3 piping not protected by a pressure relieving device, or that can be isolated from a pressure reliving device must be designed for at least the highest pressure that can be developed. Bounding pressure and temperature limits are listed for each of the piping material classes in the Piping Material Class Description document.

	Information Assessed	Source of Information	Discussion
Strength	Maximum flows and any unusual operating stresses are identified	Drawings listed above under References; 24590-WTP-DC-PS-01-001, Rev. 3, Pipe Stress Design Criteria including "Pipe Stress Criteria" and "Span Method Criteria"; 24590-WTP-PER-PL-02-001, Rev. 5, Piping Material Class Description.	The expected flow paths for the ancillary equipment are identified on the P&ID drawing. The Pipe Stress Design Criteria document specifies the ASME B31.3 code for piping design. This code requires piping to be designed to the highest pressure that can be developed in a piping system, assuring that maximum operating stresses remain within code allowables. The Piping Material Class Description document lists the bounding pressure and temperature limits for each piping material class.
Secondary Containment	Ancillary equipment is designed with secondary containment that is constructed of materials compatible with the waste and of sufficient strength to prevent failure (pressure gradients, waste, climatic conditions, daily operations), provided with a leak-detection system, and designed to drain and remove liquids.	Drawings and System Description listed above under References.	The ancillary equipment considered in this assessment is located in the inaccessible process cells inside the PTF. Secondary containment for ancillary equipment within the cells is provided by the stainless steel liners plates and sumps and is outside the scope of this integrity assessment.

Job No. 24590

Bechtel National, Inc.

SUPPLIER DOCUMENT STATUS

1. [X] **Work may proceed.**
2. [ ] **Revise and resubmit. Work may proceed subject to resolution of indicated comments.**
3. [ ] **Revise and resubmit. Work may not proceed.**
4. [ ] **Review not required. Work may proceed.**

Permission to proceed does not constitute acceptance or approval of design details, calculations, analyses, test methods, or materials developed or selected by the supplier and does not relieve supplier from full compliance with contractual obligations.

REVIEWED									

G-321 Document Category N/A
[From Supplement A to G-321-E (E) or G-321-V (V), as applicable, or "N/A" if SSRS is used]

Supersedes BNI Document No. N/A Rev. _____
[When applicable]

Accepted by DC Pfluger (Print Name) DC Pfluger (Signature) 6/30/04 (Date)

Released by N/A (Print Name) _____ (Signature) _____ (Date)
[When applicable]

416 GP&S 7-03

24590-CM-HC4-HXYG-00138-02-00036
REV. 00A

SUBCONTRACT SUBMITTAL

Best Available Copy

R10328965

COGEMA-IA-061, Rev. 0

IQRPE REVIEW -
PRETREATMENT FACILITY (PTF) CESIUM NITRIC ACID RECOVERY PROCESS SYSTEM (CNP) VESSELS CNP-VSL-00001, CNP-VSL-00003 & CNP-VSL-00004

"I, John T. Baxter have reviewed, and certified a portion of the design of a new tank system or component located at the Hanford Waste Treatment Plant, owned/operated by Department of Energy, Office of River Protection, Richland, Washington. My duties were independent review of the current design for the Pretreatment Facility (PTF) Cesium Nitric Acid Recovery Process System (CNP) Vessels CNP-VSL-00001, CNP-VSL-00003 & CNP-VSL-00004as required by The Dangerous Waste Regulations, namely, WAC 173-303-640(3) applicable paragraphs, i.e., (a) through (g)."

"I certify under penalty of law that I have personally examined and am familiar with the information submitted in this document and all attachments and that, based on my inquiry of those individuals immediately responsible for obtaining the information, I believe that the information is true, accurate, and complete. I am aware that there are significant penalties for submitting false information, including the possibility of fine and imprisonment."

The documentation reviewed indicate that the design intent fully satisfies the requirements of the WAC.

The attached review is seven (7) pages numbered one (1) through seven (7).

JOHN T. BAXTER
STATE OF WASHINGTON
18978
REGISTERED
PROFESSIONAL ENGINEER
06/29/04
EXPIRES: 10/28/04

John T. Baxter
Signature

06/29/2004
Date

24590-CM-HC4-HX46-00138-02-00036 Rev 00A

STRUCTURAL INTEGRITY ASSESSMENT OF THE PRETREATMENT FACILITY (PTF) CESIUM NITRIC ACID RECOVERY PROCESS SYSTEM (CNP) VESSELS CNP-VSL-00001, CNP-VSL-00003 & CNP-VSL-00004

COGEMA-IA-061
Rev. 0

Please note that source, special nuclear and byproduct materials, as defined in the Atomic Energy Act of 1954 (AEA), are regulated at the U.S. Department of Energy (DOE) facilities exclusively by DOE acting pursuant to its AEA authority. DOE asserts, that pursuant to the AEA, it has sole and exclusive responsibility and authority to regulate source, special nuclear, and byproduct materials at DOE-owned nuclear facilities. Information contained herein on radionuclides is provided for process description purposes only.

Scope	Scope of this Integrity Assessment	The scope of this integrity assessment includes the Pretreatment Facility (PTF) Cesium Nitric Acid Recovery Process System (CNP) Vessels. The Vessels are Cesium Evaporator Eluate Lute Pot, CNP-VSL-00001; Eluate Contingency Storage Vessel, CNP-VSL-00003 and Cs Evaporator Recovered Nitric Acid Vessel, CNP-VSL-00004. The primary function of the CNP System vessels is to receive eluate from the Cesium Ion Exchange Process System (CXP) and to provide recovered eluant to the CXP system on demand.
References	Drawings and Material Requisitions	24590-PTF-P1-P01T-P0001, Rev. 3, Pretreatment General Arrangement Plan at EL. 0'-0"; 24590-PTF-M5-V17T-P0014, Rev. 0, Process Flow Diagram Cesium Nitric Acid Recovery Process System CNP; 24590-QL-MRB-MVA0-00003, Rev. 1, Pressure Vessels, High Alloy, Shop Fab, Small, <60" dia QL-1/2 (N112) (MS015), MR Section 2 – Technical Specifications (Rev. 5, August 19,2003) including –S01, -S02, -S0003; 24590-QL-MRD-MVA0-00002, Rev. 2, Pressure Vessels, High Alloy, Shop Fabricated, Medium QL-1 (N116), MR Section 2 – Technical Specifications (Rev. 5, August 19, 2003) including –S0011; 24590-CM-MRB-MVA0-00002, Rev. 001, Pressure Vessels, Shop Fabricated, Medium, MR Section 2 – Technical Specifications (Rev. 3, January 6, 2003) including -S01, -S02, -S03, -S0004, -S0006, & -S0007; 24590-PTF-MV-CNP-00005, Rev. 0, Equipment Assembly Cesium Evaporator Eluate Lute Pot CNP-VSL-00001; 24590-PTF-MV-CNP-00001, Rev. 0, Equipment Assembly Eluate Contingency Storage Vessel CNP-VSL-00003; 24590-PTF-MV-CNP-00002, Rev. 0, Equipment Assembly Cs Evaporator Recovered Nitric Acid Vessel CNP-VSL-00004;

References	Mechanical Data Sheets, Plant Item Material Selection Data Sheets and System Description	Mechanical Data Sheet: Vessel, 24590-PTF-MVD-CNP-P0010, Rev. 0, Cesium Evaporator Eluate Lute Pot CNP-VSL-00001; Mechanical Data Sheet: Vessel, 24590-PTF-MVD-CNP-P0003, Rev. 1, Eluate Contingency Storage Vessel CNP-VSL-00003; Mechanical Data Sheet: Vessel, 24590-PTF-MVD-CNP-P0007, Rev. 1, Cs Evaporator Recovered Nitric Acid Vessel CNP-VSL-00004; Plant Item Material Selection Data Sheet, 24590-PTF-N1D-CNP-P0011, Rev. 0, Cs Evaporator Eluate Lute Pot CNP-VSL-00001, (PTF); Plant Item Material Selection Data Sheet, 24590-PTF-N1D-CNP-P0009, Rev. 0, Eluate Contingency Storage Vessel CNP-VSL-00003 (PTF); Plant Item Material Selection Data Sheet, 24590-PTF-N1D-CNP-P0006, Rev. 1 , Cs Evaporator Recovered Nitric Acid Vessel CNP-VSL-00004 (PTF); 24590-PTF-3YD-CNP-00001, Rev. 0, System Description for Cesium Nitric Acid Recovery Process – System CNP; System Description Change Notice (SDCN) No. 24590-PTF-3YN-CNP-00001 for System Description Number 24590-PTF-3YD-CNP-00001, Rev. 0

Summary of Assessment

For each item of "Information Assessed" (i.e., Criteria) on the following pages, the items listed under "Source of Information" were reviewed and found to furnish adequate design controls and requirements to assure the design intent fully satisfies the WAC requirements.

	Information Assessed	Source of Information	Discussion
Design	Vessel design standards are appropriate and adequate for the vessel's intended use.	Drawings, Material Requisitions and Mechanical Data Sheets listed above under References; 24590-WTP-3PS-MV00-T0001, Rev. 1, Engineering Specification for Pressure Vessel Design and Fabrication; SCN No. 24590-WTP-3PN-MV00-00006 for Spec. No. 24590-WTP-3PS-MV00-T0001, Rev. 1; 24590-WTP-3PS-MV00-T0003, Engineering Specification for Pressure Vessel Fatigue Analysis (Rev. 1 CNP-VSL-00004, Rev. 2 CNP-VSL-00003); ASME Boiler and Pressure Vessel (B&PV) Code, Section VIII, Division 1, Rules for Construction of Pressure Vessels, American Society of Mechanical Engineers; ASME Boiler and Pressure Vessel (B&PV) Code, Section VIII, Division 2, Alternative Rules, American Society of Mechanical Engineers	The Material Requisitions require use of The Engineering Specification for Pressure Vessel Design and Fabrication for vessels CNP-VSL-00001, -00003 and -00004. This specification requires that the vessels and all vessel appurtenances are to be designed to ASME B&PV Code, Section VIII, Division 1 rules. Additional supplementary requirements are specified in the specification for Pressure Vessel Design and Fabrication. These supplementary requirements address pressure vessel fatigue analysis, positive material identification, standard fabrication tolerances, acceptable welding procedures for the vessel and appurtenances, welder qualifications and testing records, NDE inspections and records, quality assurance requirements, and packaging, shipping, handling and storage requirements. Two of the vessels have internal equipment (CNP-VSL-00003 & -00004) that is subject to cyclic loading, e.g., pulse jet mixers and charge vessels. The Engineering Specification for Pressure Vessel Fatigue Analysis requires use of the fatigue design standards in ASME B&PV Code, Section VIII, Division 2, which are appropriate for components with a high number of load cycles. The Mechanical Data Sheets identify vessels CNP-VSL-00001 & -00003 as Quality Level (QL-1) and Seismic Category (SC-I) equipment. Vessel CNP-VSL-00004 is listed as Quality Level (CM, Commercial Grade) and Seismic Category (SC-III) equipment. Quality levels and seismic categories are discussed in detail in the Engineering Specification for Pressure Vessel Design and Fabrication. These are adequate and acceptable codes and standards for design and fabrication of these CNP system vessels.
	If a non-standard vessel is to be used, the design calculations demonstrate sound engineering principles of construction.	24590-WTP-3PS-MV00-T0001, Rev. 1, Engineering Specification for Pressure Vessel Design and Fabrication; SCN No. 24590-WTP-3PN-MV00-00006 for Spec. No. 24590-WTP-3PS-MV00-T0001,Rev.1; ASME Boiler and Pressure Vessel (B&PV) Code, Section VIII, Division 1, Rules for Construction of Pressure Vessels, American Society of Mechanical Engineers	The Engineering Specification for Pressure Vessel Design and Fabrication require that the CNP system vessels are to be designed and fabricated in accordance with the requirements of ASME B&PV Code, Section VIII, Division 1. The vessels are to be delivered after design, fabrication, inspection and testing with an ASME code stamp and the vessels will be registered with the National Board. These are shop fabricated vessels for mixed waste service in the PTF. The vessel design standards are appropriate and adequate for the vessels' intended uses.

	Information Assessed	Source of Information	Discussion
Design	Vessel has adequate strength, after consideration of the corrosion allowance, to withstand the operating pressure, operating temperature, and seismic loads.	Drawings, Material Requisitions and Mechanical Data Sheets listed above under References; 24590-WTP-3PS-MV00-T0001, Rev. 1, Engineering Specification for Pressure Vessel Design and Fabrication; SCN No. 24590-WTP-3PN-MV00-00006 for Spec. No. 24590-WTP-3PS-MV00-T0001, Rev. 1; 24590-WTP-3PS-MV00-T0002, Rev. 1, Engineering Specification for Seismic Qualification Criteria for Pressure Vessels; 24590-WTP-3PS-SS90-T0001, Rev. 0, Engineering Specification for Seismic Qualification of Seismic Category I/II Equipment and Tanks; 24590-WTP-3PS-FB01-T0001, Rev. 1, Engineering Specification for Structural Design Loads for Seismic Category III & IV Equipment and Tanks; UBC, 1997, Uniform Building Code, International Conference of Building Officials	The Engineering Specification for Pressure Vessel Design and Fabrication requires that the CNP vessels are to be designed to ASME B&PV Code, Section VIII, Division 1 rules. This code requires specific consideration of the operating pressures, temperatures, seismic loads, and corrosion allowance in the design process. Supplementary general design criteria are specified in the Engineering Specification for Seismic Qualification Criteria for Pressure Vessels. The Mechanical Data Sheets identify the operating pressure and temperature ranges for each vessel, the materials selected in the corrosion report, the corrosion allowance, and the requirements for seismic qualification in the design. The Mechanical Data Sheets indicate that vessels CNP-VSL-00001 & -00003 are to be analyzed as SC-I vessels. The Engineering Specification for Seismic Qualification of Seismic Category I/II Equipment and Tanks provides detailed guidance for the seismic analyses. The Mechanical Data Sheet indicates that CNP-VSL-00004 is to be analyzed as a SC-III vessel. The Engineering Specification for Structural Design Loads for Seismic Category III & IV Equipment and Tanks provides detailed guidance for this seismic analysis which requires use of the seismic design requirements in the 1997 UBC. These are appropriate codes and standards to ensure the tanks have adequate strength at the end of their design lives.
Foundation	Vessel foundation will maintain the load of a full vessel.	Drawings listed above under References; 24590-WTP-3PS-MV00-T0001, Rev. 1, Engineering Specification for Pressure Vessel Design and Fabrication; SCN No. 24590-WTP-3PN-MV00-00006 for Spec. No. 24590-WTP-3PS-MV00-T0001, Rev. 1	The Equipment Assembly drawings show the support arrangements for the CNP system vessels. All of the vessels are provided with cylindrical skirts with a ring beam to provide for bearing on concrete or support rings and anchorage. The Engineering Specification for Pressure Vessel Design and Fabrication requirements assure adequate vessel foundation designs.
	If in an area subject to flooding, the vessel is anchored.	24590-WTP-3PS-MV00-T0001, Rev. 1, Engineering Specification for Pressure Vessel Design and Fabrication; SCN No. 24590-WTP-3PN-MV00-00006 for Spec. No. 24590-WTP-3PS-MV00-T0001, Rev. 1;	Buoyant forces of an empty vessel in a flooded room are a mandatory standard design load case in the Engineering Specification for Pressure Vessel Design and Fabrication.

	Information Assessed	Source of Information	Discussion
Frost Heave	Vessel system will withstand the effects of frost heave.	Drawings and System Description listed above under References 24590-WTP-DC-ST-01-001, Rev. 2, Structural Design Criteria	The PTF General Arrangement Plan at elevation 0'-0" shows that vessels CNP-VSL-00001, -00003 and -00004 are installed in inaccessible process cells. These cells are supported by the PTF mat foundation. The Structural Design Criteria requires that all structural foundations extend into the surrounding soil below the frost line in order to preclude frost heave. The frost line is located 30 in. below finished grade. The PTF mat foundation is not subject to frost heave; therefore, the CNP system vessels will not be subject to frost heave.
Waste Characteristics	Characteristics of the waste to be stored or treated have been identified (ignitable, reactive, toxic, specific gravity, vapor pressure, flash point, storage temperature)	Drawings and System Description listed above under References; 24590-WTP-PER-PR-03-002, Rev. 1, Toxic Vapors and Emissions from WTP Tank Systems and Miscellaneous Treatment Unit System; 24590-WTP-PER-PR-03-001, Rev. 1, Prevention of Hydrogen Accumulation in WTP Tank Systems and Miscellaneous Treatment Unit Systems	The System Description identifies that vessels CNP-VSL-00001 & -00004 receive eluate from the Cesium Ion Exchange Process System (CXP) and recovered nitric acid eluate feed from the Cesium Evaporator Nitric Acid Rectifier respectively. The eluate and the recovered nitric acid eluate feed are both about 0.5 M HNO_3 acqueous solutions. The eluate contains the cesium that has been separated from the Low-Activity Waste feed. The primary function of these vessels is to provide primary confinement of the waste during normal operation, abnormal operations and during and after a design level seismic event. These vessels are not a concern for hydrogen control. Vessel CNP-VSL-00003, the Eluate Contingency Storage Vessel, functions as a receiver vessel for both normal and abnormal operations in the CNP system. It can receive the Cesium concentrate from the Cesium Evaporator Separator Vessel to provide lag storage for normal operations. This vessel can also receive eluate directly from the CXP system during abnormal operations. This vessel provides primary confinement of the waste during normal operations, abnormal operations, and during and after a Design Basis Earthquake. It must also maintain an intact connection to the hydrogen purge system during these same conditions as discussed in the Prevention of Hydrogen Accumulation in WTP Tank Systems document. The process flow diagram shows that all of the CNP system vessels connect to the Pretreatment Vessel Vent Process System for control of aerosols and offgas vapors as discussed in the Toxic Vapors and Emissions from WTP Tank Systems document.

	Information Assessed	Source of Information	Discussion
Waste Characteristics	Vessel is designed to store or treat the wastes with the characteristics defined above and any treatment reagents.	Mechanical Data Sheets, Plant Item Material Selection Data Sheets and System Description listed above under References	The Plant Item Material Selection Data Sheets show that the materials selected for vessels CNP-VSL-00001, -00003 and -00004 take into account the ranges of waste chemistries that will be received in each vessel. Additional reagents are not added to these vessels during normal operations. The Mechanical Data Sheets list 304 stainless steel (maximum 0.030% Carbon, dual certified), hereinafter referred to as 304L stainless steel as the material selected for CNP-VSL-00001 & -00004. A somewhat more resistant alloy, 316 stainless steel (maximum 0.030% Carbon, dual certified), hereinafter referred to as 316L stainless steel, was selected for CNP-VSL-00003.
Compatibility	The waste types are compatible with each other.	Plant Item Material Selection Data Sheets and System Description listed above under References	The CNP System Description document discusses wastes received in each of the CNP vessels during normal and abnormal operations. Waste chemistries were considered in the Plant Item Material Selection Data Sheets for each of the CNP vessels. Incompatible wastes are not mixed in any of the CNP system vessels.
	Vessel material and protective coatings ensure the vessel structure is adequately protected form the corrosive effects of the waste stream and external environments (expected to not leak or fail for the design life of the system)	Mechanical Data Sheets, Plant Item Material Selection Data Sheets and System Description listed above under References	The Plant Item Material Selection Data Sheets show that 304L stainless steel was selected for CNP-VSL-00001 & -00004 as adequate for internal corrosion for a 40 year service life. The Plant Item Material Selection Data Sheet for CNP-VSL-00003 shows that 316L stainless steel was selected as adequate for internal corrosion for an expected 40 year service life. These material selections are correctly carried forward to the Mechanical Data Sheets for these vessels. All of the CNP vessels are located inside inaccessible process cells in the PTF. These cells normally operate in dry conditions with active ventilation, therefore, external corrosion will be very limited. The materials selected are adequate to provide the required 40 year service life for these vessels.

	Information Assessed	Source of Information	Discussion
Corrosion Allowance	Corrosion allowance is adequate for the intended service life of the vessel.	Drawings, Mechanical Data Sheets and Plant Item Material Selection Data Sheets listed above under References	The Plant Item Material Selection Data Sheets show that 304L stainless steel was selected for CNP-VSL-00001 & -00004 as adequate with a corrosion allowance of 0.040 in. for internal corrosion for a 40 year service life. The Plant Item Material Selection Data Sheet for CNP-VSL-00003 shows that 316L stainless steel was selected as adequate with a corrosion allowance of 0.040 in. for internal corrosion for an expected 40 year service life. The material selections and corrosion allowances are accurately carried forward to the Mechanical Data Sheets These material selections and corrosion allowances assure an adequate service life for the vessels.
Pressure Controls	Pressure controls (vents and relief valves) are adequately designed to ensure pressure relief if normal operating pressures in the vessel are exceeded.	Drawings and System Description listed above under References	The Process Flow Diagram shows that CNP-VSL-00003 & -00004 overflow to vessel PWD-VSL-00033 located at elevation (-) 45'-0" in the PTF. Vessel CNP-VSL-00001 normally operates in a full condition overflowing to CNP-EVAP-00001 as part of the gravity feed system for the evaporator.as discussed in the System Description. The Equipment Assembly drawings show that the overflow lines are larger than any of the other liquid conveying lines entering the vessels and therefore have adequate flow capacity to preclude overpressure for CNP-VSL-00003 & -00004.

Job No. 24590

Bechtel National, Inc.

SUPPLIER DOCUMENT STATUS

1. [X] **Work may proceed.**
2. [ ] **Revise and resubmit. Work may proceed subject to resolution of indicated comments.**
3. [ ] **Revise and resubmit. Work may not proceed.**
4. [ ] **Review not required. Work may proceed.**

Permission to proceed does not constitute acceptance or approval of design details, calculations, analyses, test methods, or materials developed or selected by the supplier and does not relieve supplier from full compliance with contractual obligations.

REVIEWED								

G-321 Document Category N/A
[From Supplement A to G-321-E (E) or G-321-V (V), as applicable, or "N/A" if SSRS is used]

Supersedes BNI Document No. ~~24590-CM-HC4-HXYG-00138-02-00037~~ Rev. ~~00A~~ DCP 7/14/04
[When applicable]

	Print Name	Signature	Date
Accepted by	DC Pfluger	DCPfluger	7/13/04
Released by [When applicable]	N/A		

416 GP&S 7-03

24590-CM-HC4-HXYG-00138-02-00037
REV. 00B

SUBCONTRACT SUBMITTAL

R10336938

COGEMA-IA-062, Rev. 1

IQRPE REVIEW –
PRETREATMENT FACILITY (PTF) ELEVATION 0'-0" CESIUM NITRIC ACID RECOVERY PROCESS (CNP) ANCILLARY EQUIPMENT

"I, Douglas W. Hendrickson, have reviewed, and certified a portion of the design of a new tank system or component located at the Hanford Waste Treatment Plant, owned/operated by Department of Energy, Office of River Protection, Richland, Washington. My duties were independent review of the current design for the Pretreatment Facility (PTF) Elevation 0'-0" Cesium Nitric Acid Recovery Process (CNP) Ancillary Equipment as required by the Dangerous Waste Regulations, namely, WAC 173-303-640(3) applicable paragraphs, i.e., (a) through (g)."

"I certify under penalty of law that I have personally examined and am familiar with the information submitted in this document and all attachments and that, based on my inquiry of those individuals immediately responsible for obtaining the information, I believe that the information is true, accurate, and complete. I am aware that there are significant penalties for submitting false information, including the possibility of fine and imprisonment."

The documentation reviewed indicate that the design intent fully satisfies the requirements of the WAC.

The attached review is thirteen (13) pages numbered one (1) through thirteen (13).

DOUGLAS W. HENDRICKSON
STATE OF WASHINGTON
33907
REGISTERED
PROFESSIONAL ENGINEER

EXPIRES 4/10/2005

P.E.
July 2004

Signature

P.E. 13 July 2004

Date

STRUCTURAL INTEGRITY ASSESSMENT OF THE PRETREATMENT FACILITY (PTF) ELEVATION 0'-0" CESIUM NITRIC ACID RECOVERY PROCESS (CNP) ANCILLARY EQUIPMENT

COGEMA-IA-062
REV. 1

Please note that source, special nuclear and byproduct materials, as defined in the Atomic Energy Act of 1954 (AEA), are regulated at the U.S. Department of Energy (DOE) facilities exclusively by DOE acting pursuant to its AEA authority. DOE asserts, that pursuant to the AEA, it has sole and exclusive responsibility and authority to regulate source, special nuclear, and byproduct materials at DOE-owned nuclear facilities. Information contained herein on radionuclides is provided for process description purposes only.

Scope	Scope of this Integrity Assessment	This integrity assessment includes: a. Ancillary equipment associated with the PTF Cesium Nitric Acid Recovery Process System Eluate Contingency Storage Vessel as shown on drawing 24590-PTF-M6-CNP-P0001, Rev. 0. b. Ancillary equipment associated with the PTF Cesium Nitric Acid Recovery Process System Recovered Nitric Acid Vessel as shown on drawing 24590-PTF-M6-CNP-P0002, Rev. 0. c. Ancillary equipment associated with the PTF Cesium Nitric Acid Recovery Utility Services - PSA Rack as shown on drawing 24590-PTF-M6-CNP-P0003, Rev. 0. d. Ancillary equipment associated with the PTF Cesium Nitric Acid Recovery Utility Services - PSA Rack as shown on drawing 24590-PTF-M6-CNP-P0004, Rev. 0. e. Ancillary equipment associated with the PTF Cesium Nitric Acid Recovery Utility Services - Plant Wash Rack as shown on drawing 24590-PTF-M6-CNP-P0005, Rev. 0 f. Ancillary equipment associated with the miscellaneous treatment units for the PTF Cesium Nitric Acid Recovery Process System such as the Evaporator Vessel (CNP-EVAP-00001), and the Reboiler (CNP-HX-00001) as shown on drawing 24590-PTF-M6-CNP-P0008, Rev. 0. g. Ancillary equipment associated with the miscellaneous treatment units for the PTF Cesium Nitric Acid Recovery Process System such as the Rectifier (CNP-DISTC-00001) and Condensers CNP-HX-00002, HX-00003, and HX-00004 as shown on drawing 24590-PTF-M6-CNP-P0010, Rev. 0.

References	System Description and System Description Change Notice, Drawings – PFD, P&ID, PSAR, and Mechanical Systems Data Sheets	24590-PTF-3YD-CNP-00001, Rev. 0, System Description for Cesium Nitric Acid Recovery Process - System CNP; 24590-PTF-3YN-CNP-00001, System Description Change Notice for System Description for Cesium Nitric Acid Recovery Process - System CNP; 24590-PTF-M5-V17T-P0014, Rev. 1, Process Flow Diagram Cesium Nitric Acid Recovery Process System CNP; 24590-PTF-M6-CNP-P0001, Rev. 0, P&ID – PTF Cesium Nitric Acid Recovery Process System Eluate Contingency Storage Vessel; 24590-PTF-M6-CNP-P0002, Rev. 0, P&ID – PTF Cesium Nitric Acid Recovery Process System Recovered Nitric Acid Vessel; 24590-PTF-M6-CNP-P0003, Rev. 0, P&ID – PTF Cesium Nitric Acid Recovery Utility Services - PSA Rack; 24590-PTF-M6-CNP-P0004, Rev. 0, P&ID – PTF Cesium Nitric Acid Recovery Utility Services - PSA Rack; 24590-PTF-M6-CNP-P0005, Rev. 0, P&ID – PTF Cesium Nitric Acid Recovery Utility Services - Plant Wash Rack; 24590-PTF-M6-CNP-P0008, Rev. 0, P&ID – PTF Cesium Nitric Acid Recovery Process System Evaporator Vessel; 24590-PTF-M6-CNP-P0010, Rev. 0, P&ID – PTF Cesium Nitric Acid Recovery Process System Rectifier and Condensers; 24590-WTP-PSAR-ESH-01-002-02, Rev. 1A, Preliminary Safety Analysis Report (PSAR) to Support Construction Authorization; PT Facility Specific Information; 24590-PTF-MVD-CNP-P0003, Rev. 1, Mechanical Systems Data Sheet: Vessel CNP-VSL-00003 Eluate Contingency Storage Vessel; 24590-PTF-MVD-CNP-P0007, Rev. 1, Mechanical Systems Data Sheet: Vessel CNP-VSL-00004 Cs Evaporator Recovered Nitric Acid Vessel; 24590-PTF-MVD-CNP-P0010, Rev. 0, Mechanical Systems Data Sheet: Vessel CNP-VSL-00001 Cesium Evaporator Eluate Lute Pot; 24590-PTF-MXD-CNP-00002, Rev. C, Mechanical Systems Data Sheet: Process Bulge CNP-BULGE-00008

References	Plant Item Material Selection Data Sheets	24590-PTF-N1D-CNP-P0006, Rev. 1, Plant Item Material Selection Data Sheet, CNP-VSL-00004 (PTF) Cs Evaporator Recovered Nitric Acid Vessel; 24590-PTF-N1D-CNP-P0008, Rev. 0, Plant Item Material Selection Data Sheet, CNP-BRKPT-00002 (PTF) Cs Eluate Breakpot; 24590-PTF-N1D-CNP-P0009, Rev. 0, Plant Item Material Selection Data Sheet, CNP-VSL-00003 (PTF) Eluate Contingency Storage Vessel; 24590-PTF-N1D-CNP-P0010, Rev. 0, Plant Item Material Selection Data Sheet, CNP-BRKPT-00001 (PTF) Cs Concentrate Breakpot; 24590-PTF-N1D-CNP-P0011, Rev. 0, Plant Item Material Selection Data Sheet, CNP-VSL-00001 (PTF) CS Evaporator Eluate Lute Pot; 24590-PTF-N1D-CNP-P0012, Rev. 0, Plant Item Material Selection Data Sheet, CNP-HX-00004 (PTF) Cs Evaporator After-Condenser

Summary of Assessment

For each item of "Information Assessed" (i.e., Criteria) on the following pages, the items listed under "Source of Information" were reviewed and found to furnish adequate design controls and requirements to assure the design intent fully satisfies the WAC requirements.

Information Assessed		Source of Information	Assessment
Design	Ancillary equipment design standards are appropriate and adequate for the equipment's intended use.	System Description, System Description Change Notice, drawings, and material selection sheets listed above under References; 24590-WTP-DC-PS-01-001, Rev. 3, Pipe Stress Design Criteria including "Pipe Stress Criteria" and "Span Method Criteria"; ASME B31.3 Code, Process Piping, 1996 Edition, American Society of Mechanical Engineers; 24590-WTP-PER-M-02-002, Rev 1, Materials for Ancillary Equipment; 24590-WTP-PSAR-ESH-01-002-02, Rev. 1A, Preliminary Safety Analysis Report (PSAR) to Support Construction Authorization; PT Facility Specific Information; 24590-WTP-MX00-TP001, Rev. 1, Process Bulge Design and Fabrication	The Pipe Stress Design Criteria document identifies ASME B31.3 as the design code for piping systems of the WTP. Seismic Categories and Quality Levels vary among the ancillary equipment components. While most of the vessels, pumps and heat exchangers are Seismic Category I (SC-I) and Quality Level 1 (QL-1), the other ancillary equipment is predominantly SC-II/QL-2 or SC-III/Commercial Material grade (CM). Guiding characteristics of these assignments are that black cell equipment is more likely to be SC-I/Q-1 while the lower design standards are applied to decreasingly radioactive or non-radioactive service and readily replaceable equipment within the hot cell. CNP-VSL-00004, as an exception is specified as III/CM as its service is of moderate nitric acid solution in a black cell. The hydrogen mitigation portions of the ancillary equipment, including RFD/PJM ejector nozzles and air piping crossing into the C3 area are SDC and will be SC-I/QL-1 as exemplified on 24590-PTF-M6-CNP-00003 and -00004. Implicit hydrogen mitigation portions of the ancillary equipment include the breakpots and the lutepot CNP-VSL-00001 which allow gas-liquid separations and establish hydraulic boundaries between atmospheric and vacuum operations. Break pots are ancillary equipment and must comply with established material standards and service. The Seismic Categories are explained in detail in the Pipe Stress Design Criteria document. Bulge design and fabrication standards for SC I & II equipment are addressed in 24590-WTP-MX00-TP001. Quality Levels are discussed in the PSAR. These codes and standards are acceptable and adequate for the design of the ancillary equipment and secondary containment (bulge) for the intended service.

Information Assessed		Source of Information	Assessment
	If the ancillary equipment to be used is not built to a design standard, the design calculations demonstrate sound engineering principles of construction.	24590-WTP-DC-PS-01-001, Rev. 3, Pipe Stress Design Criteria including "Pipe Stress Criteria" and "Span Method Criteria"; ASME B31.3 Code, Process Piping, 1996 Edition, American Society of Mechanical Engineers; 24590-WTP-3PS-PS02-T0001, Rev. 2, Engineering Specification for Shop Fabrication of Piping; 24590-WTP-3PS-PF00-T0001, Rev. 1, Engineering Specification for Process Jumper Fabrication for PT and HLW; 24590-WTP-MX00-TP001, Rev. 1, Process Bulge Design and Fabrication; 24590-PTF-MXD-CNP-00002, Rev. C, Mechanical Systems Data Sheet: Process Bulge CNP-BULGE-00008	The ancillary equipment is built to design and fabrication standards. The Pipe Stress Design Criteria document specifies that piping is to be designed in accordance with ASME B31.3. Piping fabrication, 24590-WTP-3PS-PS02-T0001, is also specified to be in accord with ASME B31.3. Jumpers are to be designed and fabricated in accord with ASME B31.3 as well as structural welding codes of AWS D1.1 and D1.6 subject to ASME B&PV Code Section IX welding and brazing certification and Section V non-destructive examination. Bulge Mechanical Systems Data sheets indicate bulge construction is intended to be fabricated to QL-2 and SC-II of 0.25 inches of 316L Stainless Steel.

Information Assessed		Source of Information	Assessment
Design	Ancillary equipment has adequate strength at the end of its design life to withstand the operating pressure, operating temperature, thermal expansion, and seismic loads. Equipment is protected against physical damage and excessive stress due to settlement, vibration, expansion, or contraction.	Drawings listed above under References; 24590-WTP-DC-PS-01-001, Rev. 3, Pipe Stress Design Criteria including "Pipe Stress Criteria" and "Span Method Criteria"; Uniform Building Code (UBC), 1997 Edition, International Conference of Building Officials; ASME Boiler and Pressure Vessel Code, Section III, Rules for Construction of Nuclear Facility Components, Division 1, Subsection NC, Appendix N and Appendix F, 1995; 24590-WTP-VV-PS-01-001, Rev. 2, Verification and Validation Report for ME101, Linear Elastic Analysis of Piping, Version N8	The Pipe Stress Design Criteria document requires the use of the ASME B31.3 Code for piping design. ASME B31.3 requires explicit consideration of many loadings including operating pressure, operating temperature, thermal expansion/contraction, settlement, vibration, and corrosion allowance in the design of piping. Elements of the ASME B&PV Code, Section III, Division 1, Subsection NC, Appendix N and Appendix F are used to supplement the requirements of ASME B31.3 for seismic design of SC-I/SC-II piping. ASME B&PV Code, Section III, Division 1, Subsection NC and Appendix F, and the Uniform Building Code (UBC) are used to supplement the requirements of ASME B31.3 for seismic design of SC-III/SC-IV piping for this ancillary equipment including portions of the plant wash rack PWD-RK-00008 supply to vessel wash rings and to condensers as well as non-regulated portions of air racks PSA-RK-00008 and -00009 outside of the black cells, and flanges and nozzles of vessel CNP-VSL-00004 as shown on the P&IDs as many of these components are designed as commercial grade SC-III. Details of the seismic design methods are discussed in the Pipe Stress Design Criteria document. Design is by hand calculations and computer codes that have been tested and approved as discussed in the Verification and Validation Report for ME101, Linear Elastic Analysis of Piping, Version N8. These are adequate and appropriate codes and standards to ensure that the ancillary equipment will have adequate strength at end of design life to withstand all anticipated loadings.

Information Assessed		Source of Information	Assessment
Supports	Ancillary equipment supports are adequately designed.	Drawings - see references above; 24590-WTP-DC-PS-01-002, Rev 2, Pipe Support Design Criteria; 24590-WTP-PER-PS-02-001, Rev. 4, Ancillary Equipment Pipe Support Design; ASME B31.3 Code, Process Piping, 1996 Edition, American Society of Mechanical Engineers; ASME Boiler and Pressure Vessel Code, Section III, Rules for Construction of Nuclear Facility Components, Division 1, Subsection NF and Appendix F, 1995; 24590-WTP-PL-PS-01-001, Rev 1, Verification and Validation Test Plan for Bechtel's ME150 Pipe Support Family of Programs (PCFAPPS)	The Pipe Support Design Criteria considers all load types identified in ASME B31.3 and utilizes ASME Section III, Division 1, Subsection NF and Appendix F to supplement the requirements of ASME B31.3 for seismic design of SC-I/II and SC-III/IV pipe supports. Bounding load cases are passed to the pipe support designers from the results of the ancillary equipment piping stress analyses. Details of the seismic design methodology are discussed in the Pipe Support Design Criteria document. Analysis is by manual calculation and computer programs that have been tested and approved as discussed in the Verification and Validation Test Plan for Bechtel's ME150 Pipe Support Family of Programs (PCFAPPS). The Ancillary Equipment Pipe Support Design document shows examples of typical equipment supports. These are appropriate codes and standards for design of the CNP system ancillary equipment supports. Ancillary equipment supports are to be designed to allow a minimum of heat to be transferred to the building structures (building structures not to exceed 150 °F for concrete and 200 °F for steel). Design standards for vessel internal equipment supports are discussed in the integrity assessment for the CNP system vessels.

Information Assessed		Source of Information	Assessment
Connections	Seams and connections are adequately designed.	24590-WTP-DB-ENG-01-001, Rev 1B, Basis of Design; 24590-WTP-DC-PS-01-001, Rev. 3, Pipe Stress Design Criteria including "Pipe Stress Criteria" and "Span Method Criteria"; ASME B31.3 Code, Process Piping, 1996 Edition, American Society of Mechanical Engineers; ASME Boiler and Pressure Vessel Code, Section IX, Welding and Brazing Qualifications; ASME/ANSI B16.5, 1988 Edition, Piping Flanges and Flanged Fittings; 24590-WTP-PER-PL-02-001, Rev. 5, Piping Material Class Description; 24590-WTP-3PS-PS02-T00001, Rev. 2, Shop Fabrication of Piping; 24590-WTP-MX00-TP001, Rev. 1, Process Bulge Design and Fabrication	The Basis of Design states that in-cell piping that is non-maintainable will be fully welded. The Pipe Stress Design Criteria document specifies the ASME B31.3 Process Piping design code for the piping systems. Welding is to be performed in accordance with the requirements of ASME B31.3 and the ASME B&PV Code, Section IX. Flange connections are to be designed in accordance with ANSI B16.5 as called out by piping material class. Process piping within bulges is designed and fabricated in accord with *Shop Fabrication of Piping* which requires welding to standards of ASME B&PV Section IX, and inspected in accord with visual, liquid penetrant, and radiographic test methods of ASME B&PV Section V as appropriate. Bulges are required to be welded to standards of ASME B&PV Section IX, and inspected in accord with visual, liquid penetrant, and radiographic test methods of ASME B&PV Section V as appropriate. These are appropriate codes and standards for design and fabrication of the CNP system ancillary equipment and bulge as secondary containment.
Supports	The system will withstand the effects of frost heave.	System Description and SDCN listed above under References; 24590-WTP-DC-ST-01-001, Rev. 2, Structural Design Criteria	The ancillary equipment associated with the CNP system considered in this assessment is located in above grade bulges, the central hot cell, and black cells inside the Pretreatment Facility. The Structural Design Criteria requires that all structural foundations shall extend into the surrounding soil below the frost line to preclude frost heave. The frost line is 30 in. below grade. The PTF building foundations are not subject to frost heave; therefore, the ancillary equipment located inside the building is not subject to frost heave.

Information Assessed		Source of Information	Assessment
Waste Characteristics	Characteristics of the waste to be stored or treated have been identified (ignitable, reactive, toxic, specific gravity, vapor pressure, flash point, temperature)	24590-WTP-PSAR-ESH-01-002-02, Rev. 1A, Preliminary Safety Analysis Report (PSAR) to Support Construction Authorization; PT Facility Specific Information; System Description and SDCN and Process Flow Diagrams and material selection data sheets listed above under References	The PSAR provides a summary of potential hazardous conditions associated with each CNP vessel and the associated ancillary equipment. Design provisions for control of these hazards are listed in the PSAR and the System Description. The CNP System Description identifies the safety functions for ancillary equipment to include providing primary confinement of the wastes during normal operations, upset conditions and during and after a SC-II Design Basis Seismic Event, providing sufficient agitation and/or ventilation to prevent hydrogen accumulation/storage in the waste, providing secondary confinement elements (including ventilation) to SC-I, and protecting the ion exchange system (CXP) from excessive nitric acid concentrations by limiting HNO_3 product concentration. Ancillary equipment associated with the Cesium Nitric Acid Recovery Process System handle caustic and acidic liquors, nitric acid vapor, and vessel ventilation gases as well as utility air water, and high and low pressure steam. The primary function of the ancillary equipment associated with the CNP System is to provide a primary pressure and fluid boundary to protect facility workers from the hazardous materials in the vessel transfer and treatment streams and vessel ventilation stream and to provide for hydrogen mitigation.

Information Assessed		Source of Information	Assessment
Waste Characteristics	Ancillary equipment is designed to handle the wastes with the characteristics defined above and any treatment reagents.	System Description and SDCN, drawings, and material selection data sheets listed above under References; 24590-WTP-PER-M-02-002, Rev 1, Materials for Ancillary Equipment; 24590-WTP-PER-PL-02-001, Rev. 5, Piping Material Class Description; 24590-PTF-MXD-CNP-00002, Rev. C, Mechanical Systems Data Sheet: Process Bulge CNP-BULGE-00008	The System Description indicates that the CNP system vessels and exchangers, and breakpots process and store acidic waste and transfer demineralized water, steam, sodium hydroxide solutions, and nitric acid solutions and vapors. No other reagents are added to this system during normal operations. The Materials for Ancillary Equipment document requires that the material selection and corrosion/erosion allowances for ancillary equipment in contact with the waste will be equal to or better than the material and corrosion allowance of the waste source vessels except as noted therein. The CNP vessels and nozzles are fabricated of varying alloys with 304L in moderate conditions (e.g. lute pot CNP-VSL-00001), while 316L, Hastelloy C-22, and AL-6XN (6%Mo) are applied in more aggressive corrosion/erosion applications. Piping material selections as identified are consistent with the 24590-WTP-PER-M-02-002 requirement of equal or better corrosion/erosion resistance and only reduce specification when supported by demonstrated stream changes (e.g. evaporator concentrate transfer following steam ejectors on P&ID 24590-PTF-M6-CNP-P00002). The Bulge Mechanical Systems Data sheet indicates bulge construction is to QL-2 /SC-II of 0.25 inches of 316L Stainless Steel.

Information Assessed		Source of Information	Assessment
Compatibility	The pH range of the waste, waste temperature and the corrosion behavior of the structural materials are adequately addressed. Ancillary equipment material and protective coatings ensure the ancillary equipment structure is adequately protected from the corrosive effects of the waste stream and external environments. The protection is sufficient to ensure the equipment will not leak or fail for the design life of the system.	System Description, SDCN, and material selection data sheets listed above under References; 24590-WTP-DB-ENG-01-001, Rev 1B, Basis of Design; 24590-WTP-PER-M-02-002, Rev 1, Materials for Ancillary Equipment; 24590-WTP-3PS-NN00-T0001, Rev 0, Engineering Specification for Hot and Anti-Sweat Thermal Insulation; 24590-WTP-3PS-PF00-T0001, Rev. 1, Engineering Specification for Process Jumper Fabrication for PT and HLW	The Basis of Design identifies a service design life of 40 years for the ancillary equipment. All non-maintainable items will be designed to last the life of the facility. Detailed material selection (corrosion) analyses were conducted for the CNP vessels, breakpots, and heat exchangers in the PT facility process design. The Materials for Ancillary Equipment document requires that the material selection and corrosion/erosion allowances for ancillary equipment (including jumpers) in contact with the waste will be equal to or better than the material and corrosion allowance of the waste source vessels except as noted therein. The Thermal Insulation specification requires that all insulating materials used on the outside of ancillary equipment be pre-approved for use on austenitic stainless steel in accordance with applicable ASTM procedures and tests to preclude external corrosion of ancillary equipment. Corrosion allowances are considered for all ancillary equipment, therefore, the ancillary equipment will provide the expected design service life.

Information Assessed		Source of Information	Assessment
Corrosion Allowance	Corrosion allowance is adequate for the intended service life of the ancillary equipment.	Drawings listed above under References; 24590-WTP-DC-PS-01-001, Rev. 3, Pipe Stress Design Criteria including "Pipe Stress Criteria" and "Span Method Criteria"; 24590-WTP-DB-ENG-01-001, Rev 1B, Basis of Design; 24590-WTP-PER-M-02-002, Rev 1, Materials for Ancillary Equipment; 24590-WTP-PER-PL-02-001, Rev. 5, Piping Material Class Description	The Pipe Stress Design Criteria document requires use of the ASME B31.3 Code for ancillary equipment design. Consideration of corrosion, including corrosion allowance, is a mandatory requirement of ASME B31.3. A required service design life of 40 years is identified in the Basis of Design for ancillary equipment located in inaccessible process cells. Detailed material selection (corrosion) analyses are conducted for each vessel and major components in the CNP system in the PT Facility during process design. The Materials for Ancillary Equipment document requires that downstream ancillary equipment is to be constructed of equal or better materials than the source vessel, and with the same corrosion allowance as the source vessel except as noted therein. Bounding corrosion allowances are listed for each piping material class in the Piping Material Class Description document. The corrosion/erosion allowance for CNP system ancillary equipment piping and breakpot specifications are 0.040 in. or greater (AL-6XN applications) and are appropriate for the intended service.
Strength	Pressure controls (vents and relief valves) are adequately designed to ensure pressure relief if normal operating pressures in the vessels are exceeded.	Drawings listed above under References; 24590-WTP-DC-PS-01-001, Rev. 3, Pipe Stress Design Criteria including "Pipe Stress Criteria" and "Span Method Criteria"; 24590-WTP-PER-PL-02-001, Rev. 5, Piping Material Class Description	The Pipe Stress Design Criteria document specifies use of ASME B31.3 as the design code for the WTP piping. ASME B31.3 requires provision be made to safely contain or relieve any pressure to which the piping may be subjected. ASME B31.3 piping not protected by a pressure relieving device, or that can be isolated from a pressure reliving device must be designed for at least the highest pressure that can be developed. Bounding pressure and temperature limits are listed for each of the piping material classes in the Piping Material Class Description document.

Information Assessed		Source of Information	Assessment
	Maximum flows and any unusual operating stresses are identified	Drawings listed above under References; 24590-WTP-DC-PS-01-001, Rev. 3, Pipe Stress Design Criteria including "Pipe Stress Criteria" and "Span Method Criteria"; 24590-WTP-PER-PL-02-001, Rev. 5, Piping Material Class Description	The expected flow paths for the ancillary equipment are identified on the P&ID drawings. The Pipe Stress Design Criteria document specifies the ASME B31.3 code for piping design. This code requires piping to be designed to the highest pressure that can be developed in a piping system assuring that maximum operating stresses remain within code allowables. The Piping Material Class Description document lists the bounding pressure and temperature limits for each piping material class.
Secondary Containment	Ancillary equipment is designed with secondary containment that is constructed of materials compatible with the waste and of sufficient strength to prevent failure (pressure gradients, waste, climatic conditions, daily operations), provided with a leak-detection system, and designed to drain and remove liquids.	Drawings, System Description and SDCN listed above under References; 24590-WTP-MX00-TP001, Rev. 1, Process Bulge Design and Fabrication; 24590-PTF-MXD-CNP-00002, Rev. C, Mechanical Systems Data Sheet: Process Bulge CNP-BULGE-00008	The ancillary equipment considered in this assessment is located in above grade process (black and hot) cells and a bulge. The Cesium Nitric Acid Recovery Process (CNP) system vessels, breakpots, and major equipment are housed at EL. 0' hot cell P-0123 (pumps and reboiler) and EL. 0' and 28' in black cells P-0111, P-0112. Condensers and utility racks are present on EL. 77' in rooms P-0430 and P-0410, respectively. CNP-BULGE-00008, housing distribution piping and valves for eluate rectifier bottoms (nitric acid solution), is present on EL. 28' in room P-0207. The bulge is fabricated of 0.25 inches of 316L SS, compatible with the waste materials, and a 316L SS floor drain and line which route liquids into the plant wash vessel. Secondary containment for ancillary equipment within the cells is provided by the liners and sumps as appropriate and is outside the scope of this integrity assessment.

Job No. 24590

Bechtel National, Inc.

SUPPLIER DOCUMENT STATUS

1. [X] **Work may proceed.**
2. [ ] **Revise and resubmit. Work may proceed subject to resolution of indicated comments.**
3. [ ] **Revise and resubmit. Work may not proceed.**
4. [ ] **Review not required. Work may proceed.**

Permission to proceed does not constitute acceptance or approval of design details, calculations, analyses, test methods, or materials developed or selected by the supplier and does not relieve supplier from full compliance with contractual obligations.

REVIEWED										EWS

G-321 Document Category N/A
[From Supplement A to G-321-E (E) or G-321-V (V), as applicable, or "N/A" if SSRS is used]

Supersedes BNI Document No. N/A Rev. _____
[When applicable]

Accepted by DC Pflueger (Print Name) DC Pflueger (Signature) 8/3/04 (Date)

Released by N/A (Print Name) _____ (Signature) _____ (Date)
[When applicable]

416 GP&S 7-03

24590-CM-HC4-HXYG-00138-02-00040
REV. 00A

SUBCONTRACT SUBMITTAL

R10342840

IQRPE REVIEW – PRETREATMENT FACILITY (PTF) ELEVATION 0'-0" SPENT RESIN COLLECTION AND DEWATERING PROCESS – SYSTEM (RDP) VESSEL RDP-VSL-00004

"I, John T. Baxter, have reviewed, and certified a portion of the design of a new tank system or component located at the Hanford Waste Treatment Plant, owned/operated by Department of Energy, Office of River Protection, Richland, Washington. My duties were independent review of the current design for the Pretreatment Facility (PTF) Elevation 0'-0" Spent Resin Collection And Dewatering Process – System (RDP) Vessel RDP-VSL-00004 as required by the Dangerous Waste Regulations, namely, WAC 173-303-640(3) (applicable paragraphs (i.e., (a) through (g)."

"I certify under penalty of law that I have personally examined and am familiar with the information submitted in this document and all attachments and that, based on my inquiry of those individuals immediately responsible for obtaining the information, I believe that the information is true, accurate, and complete. I am aware that there are significant penalties for submitting false information, including the possibility of fine and imprisonment."

The documentation reviewed indicates that the design intent fully satisfies the requirements of the WAC.

The attached review is six (6) pages numbered one (1) through six (6).

JOHN T. BAXTER
STATE OF WASHINGTON
18978
REGISTERED
PROFESSIONAL ENGINEER
EXPIRES: 10/28/2004

John T. Baxter
Signature

07/29/2004
Date

24590-CM-HC4-HXYG-00138-02-00090 R0004

STRUCTURAL INTEGRITY ASSESSMENT OF THE PRETREATMENT FACILITY (PTF) ELEVATION 0'-0" SPENT RESIN COLLECTION AND DEWATERING PROCESS – SYSTEM (RDP) VESSEL RDP-VSL-00004

COGEMA-IA-065

REV. 0

Please note that source, special nuclear and byproduct materials, as defined in the Atomic Energy Act of 1954 (AEA), are regulated at the U.S. Department of Energy (DOE) facilities exclusively by DOE acting pursuant to its AEA authority. DOE asserts, that pursuant to the AEA, it has sole and exclusive responsibility and authority to regulate source, special nuclear, and byproduct materials at DOE-owned nuclear facilities. Information contained herein on radionuclides is provided for process description purposes only.

Scope	Scope of this Integrity Assessment	This integrity assessment addresses Pretreatment Facility (PTF) Spent Resin Collection and Dewatering Process System (RDP) Spent Resin Dewatering Moisture Separation Vessel, RDP-VSL-00004, as shown on P&ID drawing 24590-PTF-M6-RDP-P0002, Rev. 2, located at Elevation 0'-0" in Room P-0119. The function of RDP-VSL-00004 is to provide a separation, condensation and knock-out point for liquids and moist air removed from or transferred through spent resin slurried into a transport container. Recovered liquids are returned to the process for reuse as transport liquid.
References	Drawings, System Description, Mechanical Data Sheet, Plant Item Material Selection Data Sheet, Engineering Specification, Material Requisition	24590-PTF-3YD-RDP-00001, Rev. 0, System Description for Spent Resin Collection and Dewatering Process - System RDP; 24590-PTF-3YN-RDP-00001, System Description Change Notice (SCDN) for System Description Number 24590-PTF-3YD-RDP-00001, Rev. 0; 24590-PTF-3YN-RDP-00002, System Description Change Notice (SCDN) for System Description Number 24590-PTF-3YD-RDP-00001, Rev. 0; 24590-PTF-M5-V17T-P0020, Rev. 1, Process Flow Diagram Spent Resin Collection and Dewatering Process System RDP; 24590-PTF-M6-RDP-P0002, Rev. 2, P&ID – PTF Ion Exchange Spent Resin Collection and Dewatering; 24590-PTF-MVD-RDP-00008, Rev. 0, Mechanical Data Sheet: Vessel, Spent Resin Dewatering Moisture Separation Vessel, RDP-VSL-00004; 24590-PTF-N1D-RDP-P0002, Rev. 0, Plant Item Material Selection Data Sheet: Spent Resin Dewatering Moisture Separation Vessel, RDP-VSL-00004 (PTF); 24590-PTF-3PS-MWD0-T0003, Rev. 0, Engineering Specification for RDP Spent Resin Dewatering Equipment Package; Material Requisition No: 24590-QL-MRA-MWD0-00005, Rev. 1, Spent Resin Dewatering System, MR Section 2 – Technical Specifications (Rev. 2, November 26, 2002)

Summary of Assessment

For each item of "Information Assessed" (i.e., Criteria) on the following pages, the items listed under "Source of Information" were reviewed and found to furnish adequate design controls and requirements to assure the design intent fully satisfies the WAC requirements.

Information Assessed		Source of Information	Assessment
Design	Vessel design standards are appropriate and adequate for the vessel's intended use.	Mechanical Data Sheet listed above under References; 24590-WTP-3PS-MV00-T0001, Rev. 1, Engineering Specification for Pressure Vessel Design and Fabrication; ASME Boiler & Pressure Vessel (B & PV) Code, Section VIII, Div. 1, Rules for Construction of Pressure Vessels	The Engineering Specification for Pressure Vessel Design and Fabrication requires that the Spent Resin Dewatering Moisture Separation Vessel (RDP-VSL-00004) and all vessel appurtenances are to be designed to ASME Section VIII, Division 1 rules. These design requirements are appropriate for unfired pressure vessels operating with aqueous mixed waste solutions over the pressure and temperature ranges specified for these vessels. Supplementary requirements are specified in the Engineering Specification for Pressure Vessel Design and Fabrication. These supplementary requirements address positive material identification, standard fabrication tolerances, acceptable welding procedures for the vessel and appurtenances, welder qualifications and testing records, NDE inspections and records, quality assurance requirements, and packaging, shipping, handling and storage requirements. These are adequate and acceptable codes and standards for this Commercial-grade Quality Level – Commercial Grade (CM), Seismic Category (SC-III) vessel. The Spent Resin Dewatering Moisture Separation Vessel is a vertical vessel with 23.5 in. ID. Vessel vertical length is approximately 59-1/2 in. overall, with the vessel supported on a skid. The vessel minimum material wall thicknesses are: shell 0.25 in., top head 0.5 in., and bottom head 0.625 in. Materials for the shells, heads and appurtenances are to be 316 (max 0.030% C; dual certified) stainless steel. Dual certified 316 stainless steel meets the chemistry requirements of specification SA 240 316L and the mechanical requirements of specification SA 240 316. This material is hereinafter referred to as 316L stainless steel. The maximum operating volume for the vessel is about 80 gallons with an overall vessel volume of about 101 gallons.

Information Assessed		Source of Information	Assessment
Design	If a non-standard vessel is to be used, the design calculations demonstrate sound engineering principles of construction.	Mechanical Data Sheet listed above under References; ASME Boiler & Pressure Vessel (B & PV) Code, Section VIII, Div. 1, Rules for Construction of Pressure Vessels; 24590-WTP-3PS-MV00-T0001, Rev. 1, Engineering Specification for Pressure Vessel Design and Fabrication	The mechanical data sheet requires vessel design to be compliant with that of ASME Section VIII, Division 1, and code stamped. The Engineering Specification for Pressure Vessel Design and Fabrication requires that this ASME Section VIII, Division 1 vessel (RDP-VSL-00004) be delivered after design, fabrication, inspection and testing with an ASME U stamp and that the vessel be registered with the National Board. This is a shop fabricated vessel for mixed waste service in the Pretreatment Facility. As discussed in the item immediately above, the vessel design standards are appropriate and adequate for the vessel's intended uses.
	Vessel has adequate strength, after consideration of the corrosion allowance, to withstand the operating pressure, operating temperature, and seismic loads.	Engineering Specification and Mechanical Data Sheet listed above under References; 24590-WTP-3PS-MV00-T0001, Rev. 1, Engineering Specification for Pressure Vessel Design and Fabrication; 24590-WTP-3PS-MV00-T0002, Rev. 1, Engineering Specification for Seismic Qualification Criteria for Pressure Vessels; 24590-WTP-3PS-FB01-T0001, Rev. 1, Engineering Specification for Structural Design Loads for Seismic Category III & IV Equipment and Tanks	The Engineering Specification for Pressure Vessel Design and Fabrication requires consideration of the operating pressures, temperatures, seismic loads, and corrosion allowance in the design process. Supplementary seismic design criteria are specified in the Engineering Specification for Seismic Qualification Criteria for Pressure Vessels to provide for the vessels seismic design analysis. The Mechanical Data Sheet identifies the vessel's operating pressure and temperature ranges, the materials selected for the vessel, the corrosion allowance selected for the vessel, and the requirements for seismic design of the vessel. The Data Sheet indicates that vessel RDP-VSL-00004 is to be analyzed as a Seismic Category (SC-III), Quality Level (CM), vessel which requires use of the seismic design analysis and acceptance requirements of ASME Section VIII, Division 1. Details of this analysis methodology are furnished in the Engineering Specification for Seismic Qualification Criteria for Pressure Vessels and the Engineering Specification for Structural Design Loads for Seismic Category III & IV Equipment and Tanks. These are appropriate requirements and criteria to ensure the vessels have adequate strength to withstand all loads at their end of service life.

Information Assessed		Source of Information	Assessment
Foundation	Vessel foundation will maintain the load of a full vessel.	Mechanical Data Sheets, and Engineering Specification listed above under References; 24590-WTP-3PS-MV00-T0001, Rev.1, Engineering Specification for Pressure Vessel Design and Fabrication	This vessel is not directly mounted to the foundation, but skid-mounting supports are specified for the vessel of 316L stainless steel as specified in the Mechanical Data Sheet. The Engineering Specification for Pressure Vessel Design and Fabrication requirements provide for adequate vessel foundation design and anchorage to the skid. The Engineering Specification for RDP Spent Resin Dewatering Equipment Package provides for adequate structural design and anchorage of the skid.
	If in an area subject to flooding, the vessel is anchored.	Engineering Specification listed above under References; 24590-WTP-3PS-MV00-T0001, Rev.1, Engineering Specification for Pressure Vessel Design and Fabrication	Buoyant forces of an empty vessel in a flooded room are a standard design load case in this specification for Pressure Vessel Design and Fabrication. The Engineering Specification for RDP Spent Resin Dewatering Equipment Package includes the Engineering Specification for Pressure Vessel Design and Fabrication in its requirements.
Frost Heave	Vessel system will withstand the effects of frost heave.	System Description listed above under References; 24590-WTP-DC-ST-01-001, Rev. 2, Structural Design Criteria	The System Description identifies that vessel RDP-VSL-00004 is located in an above grade process cell (Room P-0119) in the PTF. The Structural Design Criteria requires that structural foundations extend into the surrounding soil below the frost line to preclude frost heave. The frost line is located 30" below finished grade. The PTF foundations are not subject to frost heave; therefore, RDP-VSL-00004 will not be subject to frost heave.

Information Assessed		Source of Information	Assessment
Waste Characteristics	Characteristics of the waste to be stored or treated have been identified (ignitable, reactive, toxic, specific gravity, vapor pressure, flash point, storage temperature)	P&ID Drawing, Mechanical Data Sheet, Plant Item Material Selection Data Sheet, and System Description listed above under References; 24590-WTP-PER-PR-03-002, Rev. 1, Toxic Vapors and Emissions from WTP Tank Systems and Miscellaneous Treatment Unit Systems	The System Description states that the primary function of the RDP-VSL-00004 is to collect and recover slurry waters used in transfer of spent ion exchange (IX) resin from the IX columns to the disposal container. When disposal is approved, the dewatered resin is transferred to the Radioactive Solid Waste Handling System for disposal. The System Description discusses the main functions for this RDP vessel as waste containment and offgas confinement. Normal design and operating conditions and waste characteristics (chemistry) are listed for vessel RDP-VSL- 00004 in the Mechanical Data Sheet and in the Plant Item Material Selection Data Sheet. The Toxic Vapors and Emissions from WTP Tank Systems and Miscellaneous Treatment Unit Systems document provides a summary of the Vessel equipment design features that provide for confinement and treatment of acutely or chronically toxic vapors and emissions during normal operations, abnormal operations, and during and after a design basis seismic event. The Pretreatment Vessel Vent Process System provides for headspace purge during normal bulk dewatering and abnormal operations.
Compatibility	Vessel is designed to store or treat the wastes with the characteristics defined above and any treatment reagents.	Mechanical Data Sheet, Plant Item Material Selection Data Sheet, and System Description listed above under References	As noted in the entry above, vessel RDP-VSL-00004 is designed to contain the waste it receives. The RDP System Description document identifies that the vessel will be part of a vendor skid subsystem used to provide dewater spent resin slurries and recover the liquid for reuse in slurry transfer. No additional chemical reagents will be added to the vessel's contents for processing during normal operations as discussed in the System Description. The Plant Item Material Selection Data Sheet provides a listing of waste chemistry for normal operations.
	The waste types are compatible with each other.	System Description listed above under References	The primary material handled in vessel RDP-VSL-00004 is slightly contaminated waters and condensate from air used to dewater spent IX resin from the Cesium Ion Exchange Process. All wastes handled in this vessel are of similar composition.

Information Assessed		Source of Information	Assessment
Corrosion	Vessel material and protective coatings ensure the vessel structure is adequately protected form the corrosive effects of the waste stream and external environments (expected to not leak or fail for the design life of the system)	Drawings, Mechanical Data Sheets, Plant Item Material Selection Data Sheet and System Description listed above under References	The RDP system description identifies that vessel RDP-VSL-00004 will be located in a process cell at elevation 0 feet (Room P-0119) in the PTF with a design service life of 40 years. The Plant Item Material Selection Data Sheet for this vessel identifies the chemical characteristics of the slightly caustic transport fluid for the spent IX resin from the Cesium Ion Exchange Process. Based on these parameters, SA 240 304L (maximum 0.030% carbon, dual certified) stainless steel was selected as an appropriate minimum material choice for a 40 year service life for this vessel. This material is hereinafter referred to as 304L stainless steel.
Corrosion Allowance	Corrosion allowance is adequate for the intended service life of the vessel.	Plant Item Material Selection Data Sheet and Mechanical Data Sheet listed above under References	The Plant Item Material Selection Data Sheet specifies a uniform corrosion allowance of 0.040 inches for a 40 year vessel life as adequate for 304L stainless steel in this waste environment. The Mechanical Data Sheet issued for purchase specifies 316L stainless steel with a 0.125 inch corrosion allowance, which exceeds that deemed necessary by the material selection data sheet. 316L stainless steel is more corrosion resistant than 304L stainless steel. The material selection is appropriate for this waste service.
Pressure Relief	Pressure controls (vents and relief valves) are adequately designed to ensure pressure relief if normal operating pressures in the vessel are exceeded.	Drawings and System Description listed above under References	The vessel is instrumented for liquid level and redundantly piped to the vessel discharge pump. During bulk dewatering of the resin, approximately 600 gallons of resin is being slurried in a total volume of approximately 7,500 gallons of resin and transfer liquid from one of the spent resin slurry vessels (RDP-VSL-00002A/B/C) and is dewatered through the dewatering container with the liquid continuing into RDP-VSL-00004 where it is continuously discharged back to another spent resin slurry vessel. During final dewatering, the system blower circulates air through the resin in the dewatering container back into vessel RDP-VSL-00004 where moisture is condensed and separated from the air stream. This collected condensate is also continuously pumped to a spent resin slurry vessel. In these operations, the vessel is vented during bulk dewatering to ensure adequate pressure relief. Pressure relief is not provided at this vessel during final dewatering, but is provided in the air circulation loop at the dewatering container dewatering fill head. This vacuum relief provides for protection of the vessel against vacuum excursion during final dewatering vessel liquid discharge.

Bechtel National, Inc.

Job No. 24590

SUPPLIER DOCUMENT STATUS

1. [X] **Work may proceed.**
2. [ ] **Revise and resubmit. Work may proceed subject to resolution of indicated comments.**
3. [ ] **Revise and resubmit. Work may not proceed.**
4. [ ] **Review not required. Work may proceed.**

Permission to proceed does not constitute acceptance or approval of design details, calculations, analyses, test methods, or materials developed or selected by the supplier and does not relieve supplier from full compliance with contractual obligations.

REVIEWED										SMS

G-321 Document Category N/A
[From Supplement A to G-321-E (E) or G-321-V (V), as applicable, or "N/A" if SSRS is used]

Supersedes BNI Document No. N/A Rev. _____
[When applicable]

Accepted by DC Pfinger (Print Name) (Signature) 8/5/04 (Date)

Released by N/A (Print Name) (Signature) (Date)
[When applicable]

416 GP&S 7-03

24590-CM-HC4-HXYG-00138-02-00041
REV. 00A

SUBCONTRACT SUBMITTAL

Best Available Copy

R10343997

COGEMA-IA-066, Rev. 0

IQRPE REVIEW –
PRETREATMENT FACILITY (PTF) ELEVATION 0'-0" ION EXCHANGE SPENT RESIN COLLECTION AND DEWATERING PROCESS (RDP) VESSEL RDP-VSL-00004 ANCILLARY EQUIPMENT

"I, John T. Baxter, have reviewed, and certified a portion of the design of a new tank system or component located at the Hanford Waste Treatment Plant, owned/operated by Department of Energy, Office of River Protection, Richland, Washington. My duties were independent review of the current design for the Pretreatment Facility (PTF) Elevation 0'-0" Ion Exchange Spent Resin Collection And Dewatering Process (RDP) Vessel RDP-VSL-00004 Ancillary Equipment as required by the Dangerous Waste Regulations, namely, WAC 173-303-640(3) applicable paragraphs, i.e., (a) through (g)."

"I certify under penalty of law that I have personally examined and am familiar with the information submitted in this document and all attachments and that, based on my inquiry of those individuals immediately responsible for obtaining the information, I believe that the information is true, accurate, and complete. I am aware that there are significant penalties for submitting false information, including the possibility of fine and imprisonment."

The documentation reviewed indicates that the design intent fully satisfies the requirements of the WAC.

The attached review is twelve (12) pages numbered one (1) through twelve (12).

08/04/04

JOHN T. BAXTER
STATE OF WASHINGTON
18978
REGISTERED
PROFESSIONAL ENGINEER

EXPIRES: 10/28/04

24590-CM-HC4-HXYG-00138-02-00041, REV. 00A

John T. Baxter
Signature

08/04/2004
Date

STRUCTURAL INTEGRITY ASSESSMENT OF THE PRETREATMENT FACILITY (PTF) ELEVATION 0'-0" ION EXCHANGE SPENT RESIN COLLECTION AND DEWATERING PROCESS (RDP) VESSEL RDP-VSL-00004 ANCILLARY EQUIPMENT

COGEMA-IA-066
REV. 0

Please note that source, special nuclear and byproduct materials, as defined in the Atomic Energy Act of 1954 (AEA), are regulated at the U.S. Department of Energy (DOE) facilities exclusively by DOE acting pursuant to its AEA authority. DOE asserts, that pursuant to the AEA, it has sole and exclusive responsibility and authority to regulate source, special nuclear, and byproduct materials at DOE-owned nuclear facilities. Information contained herein on radionuclides is provided for process description purposes only.

1

Scope	Scope of this Integrity Assessment	This integrity assessment includes ancillary equipment associated with the PTF Ion Exchange Spent Resin Collection and Dewatering Process vessel RDP-VSL-00004 as shown on P&ID drawing 24590-PTF-M6-RDP-P0002, Rev. 2.
References	Drawings and System Description	24590-PTF-3YD-RDP-00001, Rev. 0, System Description for Spent Resin Collection and Dewatering Process - System RDP; 24590-PTF-3YN-RDP-00001, System Description Change Notice (SCDN) for System Description Number 24590-PTF-3YD-RDP-00001, Rev. 0; 24590-PTF-3YN-RDP-00002, SCDN for System Description Number 24590-PTF-3YD-RDP-00001, Rev. 0; 24590-PTF-M5-V17T-P0020, Rev. 1, Process Flow Diagram Spent Resin Collection and Dewatering Process System RDP; 24590-PTF-M6-RDP-P0002, Rev. 2, P&ID – PTF Ion Exchange Spent Resin Collection and Dewatering; 24590-PTF-P1-P01T-P0001, Rev. 3, Pretreatment Facility General Arrangement Plan at EL. 0'-0"
References	Plant Item Material Selection Data Sheet, Engineering Specification and Material Requisition	24590-PTF-N1D-RPD-P0002, Rev. 0, Plant Item Material Selection Data Sheet, RDP-VSL-00004 (PTF) Spent Resin Dewatering Moisture Separation Vessel; 24590-PTF-MVD-RDP-00008, Rev. 0, Mechanical Systems Data Sheet: Vessel, Spent Resin Dewatering Moisture Separation Vessel RDP-VSL-00004; 24590-PTF-3PS-MWD0-T0003, Rev. 0 Engineering Specification for RDP Spent Resin Dewatering Equipment Package; Material Requisition No: 24590-CM-MRA-MWD0-00005, Rev. 1, Spent Resin Dewatering System, MR Section 2 – Technical Specifications (Rev. 2, November 26, 2002) and Supplements –S01 and –S0002

Summary of Assessment

For each item of "Information Assessed" (i.e., Criteria) on the following pages, the items listed under "Source of Information" were reviewed and found to furnish adequate design controls and requirements to assure the design intent fully satisfies the WAC requirements.

	Information Assessed	Source of Information	Discussion
Design	Ancillary equipment design standards are appropriate and adequate for the equipment's intended use.	Drawings, Mechanical Systems Data Sheet, and System Description listed above under References; 24590-WTP-DC-PS-01-001, Rev 3, Pipe Stress Design Criteria including "Pipe Stress Criteria" and "Span Method Criteria"; ASME B31.3 Code, Process Piping, 1996 Edition, American Society of Mechanical Engineers; 24590-WTP-VV-PS-01-001, Rev. 2, Verification and Validation Report for ME101, Linear Elastic Analysis of Piping, Version N8	The Pipe Stress Design Criteria identifies ASME B31.3 as the design code for ancillary equipment systems of the WTP. Ancillary equipment is designed using manual calculations or approved computer programs that have been verified and validated as discussed in the reference Verification and Validation Test Plan document. The P&ID drawing identifies the ancillary equipment in this system as Quality Level Commercial Grade (CM) and Seismic Category (SC-III). These codes and standards are acceptable and adequate for the design of the ancillary equipment for the intended service.
	If the ancillary equipment to be used is not built to a design standard, the design calculations demonstrate sound engineering principles of construction.	24590-WTP-DC-PS-01-001, Rev 3, Pipe Stress Design Criteria including "Pipe Stress Criteria" and "Span Method Criteria"	The ancillary equipment is built to a design standard. The Pipe Stress Design Criteria specifies that ancillary equipment is to be designed in accordance with ASME B31.3.
	Ancillary equipment has adequate strength at the end of its design life to withstand the operating pressure, operating temperature, thermal expansion, and seismic loads. Equipment is protected against physical damage and excessive stress due to settlement, vibration, expansion, or contraction.	Drawings listed above under References; 24590-WTP-DC-PS-01-001, Rev 3, Pipe Stress Design Criteria including "Pipe Stress Criteria" and "Span Method Criteria"; Uniform Building Code (UBC), 1997 Edition, International Conference of Building Officials; 24590-WTP-DB-ENG-01-001, Rev 1B, Basis of Design	The Pipe Stress Design Criteria requires the use of the ASME B31.3 Code for ancillary equipment design. ASME B31.3 requires explicit consideration of operating pressure, operating temperature, thermal expansion/contraction, settlement, vibration, and corrosion allowance in the design of piping. The Uniform Building Code is used to provide appropriate seismic design requirements for Seismic Category (SC-III) ancillary equipment as discussed in the Pipe Stress Design Criteria. The Basis of Design document specifies that passive mechanical equipment is to be designed for a nominal plant life of 40 years. These requirements and codes and standards are adequate to assure that the ancillary equipment will have adequate strength at end of life to resist all anticipated conditions.

	Information Assessed	Source of Information	Discussion
Supports	Ancillary equipment supports are adequately designed.	Mechanical Systems Data Sheet listed above under References; 24590-WTP-DC-PS-01-002, Rev 3, Pipe Support Design Criteria; ASME Boiler and Pressure Vessel Code, Section III, Rules for Construction of Nuclear Facility Components, Division 1, Subsection NC, Appendix N and Appendix F, 1995; 24590-WTP-PER-PS-02-001, Rev. 4, Ancillary Equipment Pipe Support Design; Uniform Building Code (UBC), 1997 Edition, International Conference of Building Officials; 24590-WTP-PL-PS-01-001, Rev 1, Verification and Validation Test Plan for Bechtel's ME150 Pipe Support Family of Programs (PCFAPPS)	The Pipe Support Design Criteria document considers all loadings identified in ASME B31.3 and utilizes ASME Section III (Subsection NC and Appendix N and F) to supplement the requirements of ASME B31.3 for seismic design of SC-III/IV pipe supports. Bounding load cases are passed to the pipe support designers from the results of the ancillary equipment piping stress analyses. Details of the seismic design methodology are discussed in the Pipe Support Design Criteria document. The Ancillary Equipment Pipe Support Design document provides summaries of applicable design requirements for various typical supports illustrated in the document. Analysis of supports is by manual calculation or approved computer programs that have been verified and validated as discussed in the reference Verification and Validation Test Plan document. These are appropriate codes and standards for design of ancillary equipment supports over the range of conditions identified for these systems. Design standards for vessel internal equipment supports are discussed in the integrity assessment for each system vessel.
Connections	Seams and connections are adequately designed.	24590-WTP-DC-PS-01-001, Rev 3, Pipe Stress Design Criteria including "Pipe Stress Criteria" and "Span Method Criteria"; ASME Boiler and Pressure Vessel Code, Section IX, Welding and Brazing Qualifications; ASME/ANSI B16.5, 1988 Edition, Piping Flanges and Flanged Fittings; 24590-WTP-3PS-PF00-T0001, Rev. 1, Engineering Specification for Process Jumper Fabrication for PT and HLW	The Pipe Stress Design Criteria specifies the ASME B31.3 Process Piping design code for the piping systems. Welding is to be performed in accordance with the requirements of ASME B31.3 and the ASME B&PV Code, Section IX. Flanges are to be designed in accordance with ASME B16.5 where flanged connections are allowed for ancillary equipment. The Engineering Specification for Process Jumper Fabrication for PT and HLW provides requirements for fabrication of remote handled process jumpers. These are adequate and appropriate codes and standards for design and fabrication of the ancillary equipment seams and connections.

	Information Assessed	Source of Information	Discussion
Frost Heave	The system will withstand the effects of frost heave.	System Description listed above under References; 24590-WTP-DC-ST-01-001, Rev. 2, Structural Design Criteria	The RDP-VSL-00004 ancillary equipment considered in this assessment is located in process cells P-0119 and P-0121A at elevation 0'-0" in the PTF. as discussed in the System Description. The Structural Design Criteria requires that all structural foundations shall extend into the surrounding soil below the frost line to preclude frost heave. The frost line is 30 in. below grade. The PTF building foundations are not subject to frost heave; therefore, the ancillary equipment located inside the building is not subject to the effects of frost heave.
Waste Characteristics	Characteristics of the waste to be stored or treated have been identified (ignitable, reactive, toxic, specific gravity, vapor pressure, flash point, temperature)	Plant Item Material Selection Data Sheet listed above under References; 24590-WTP-PER-PR-03-001, Rev. 1, Prevention of Hydrogen Accumulation in WTP Tank Systems and Miscellaneous Treatment Unit Systems; 24590-WTP-PER-PR-03-002, Rev. 1, Toxic Vapors and Emissions from WTP Tank Systems and Miscellaneous Treatment Unit Systems	The Prevention of Hydrogen Accumulation in WTP Tank Systems and Miscellaneous Treatment Unit Systems document indicates that flammable or explosive concentrations of hydrogen are not expected in the RDP-VSL-00004 ancillary equipment. Similarly, the Toxic Vapors and Emissions from WTP Tank Systems and Miscellaneous Treatment Unit Systems document provides a summary of the PTF ancillary equipment design features that provide for confinement and treatment of chronically toxic vapors and emissions during normal operations, abnormal operations, and during and after a design level seismic event. The Cs IX transport liquor chemistry listed in the Plant Item Material Selection Data Sheet represents the temperature range and chemistry of the fluids handled in this ancillary equipment.

	Information Assessed	Source of Information	Discussion
Waste Characteristics	Ancillary equipment is designed to handle the wastes with the characteristics defined above and any treatment reagents.	Drawings, Plant Item Material Selection Data Sheet and System Description listed above under References; 24590-WTP-PER-M-02-002, Rev 1, Materials for Ancillary Equipment; 24590-WTP-PER-PL-02-001, Rev. 5, Piping Material Class Description	The Plant Item Material Selection Data Sheet for vessel RDP-VSL-00004 lists the chemistry and temperature range for wastes handled in the vessel and specifies that 304L stainless steel is the minimum material requirement for the vessel with a corrosion allowance of 0.04 in. The Materials for Ancillary Equipment document requires that the material selection and corrosion/erosion allowances for ancillary equipment in contact with the waste will be equal to or better than the material and corrosion allowance of the waste source vessel except as noted therein. The P&ID drawing and the Piping Material Class Description document identify the ancillary equipment as 316L stainless steel. The System Description states that no reagents are handled in this ancillary equipment.
Compatibility	The pH range of the waste, waste temperature and the corrosion behavior of the structural materials are adequately addressed. Ancillary equipment material and protective coatings ensure the ancillary equipment structure is adequately protected from the corrosive effects of the waste stream and external environments. The protection is sufficient to ensure the equipment will not leak or fail for the design life of the system.	Plant Item Material Selection Data Sheet and System Description listed above under References; 24590-WTP-DB-ENG-01-001, Rev 1B, Basis of Design; 24590-WTP-PER-M-02-002, Rev 1, Materials for Ancillary Equipment	The Basis of Design identifies a service design life of 40 years for the ancillary equipment. The Plant Item Material Selection Data Sheet for vessel RDP-VSL-00004 lists the chemistry and temperature range for wastes handled in the vessel and specifies the minimum material requirement for the vessel and the corrosion allowance. The Materials for Ancillary Equipment document requires that the material selection and corrosion/erosion allowances for ancillary equipment in contact with the waste will be equal to or better than the material and corrosion allowance of the waste source vessel except as noted therein. Therefore, the ancillary equipment will provide the expected design service life.

	Information Assessed	Source of Information	Discussion
Corrosion Allowance	Corrosion allowance is adequate for the intended service life of the ancillary equipment.	Drawings listed above under References; 24590-WTP-DB-ENG-01-001, Rev 1B, Basis of Design; 24590-WTP-PER-M-02-002, Rev 1, Materials for Ancillary Equipment; 24590-WTP-PER-PL-02-001, Rev. 5, Piping Material Class Description	The Plant Item Material Selection Data Sheet for vessel RDP-VSL-00004 lists the chemistry and temperature range for wastes handled in the vessel and specifies that 304L stainless steel is the minimum material requirement for the vessel with a corrosion allowance of 0.04 in. The Materials for Ancillary Equipment document requires that downstream ancillary equipment is to be constructed of equal or better materials than the source vessel, and with the same corrosion allowance as the source vessel except as noted therein. The P&ID drawing and the Piping Material Class Description document identify the ancillary equipment piping material classes as 316L stainless steel with corrosion/erosion allowances as reported therein.
Strength	Pressure controls (vents and relief valves) are adequately designed to ensure pressure relief if normal operating pressures in the vessels are exceeded.	Drawings listed above under References; 24590-WTP-DC-PS-01-001, Rev 3, Pipe Stress Design Criteria including "Pipe Stress Criteria" and "Span Method Criteria"; 24590-WTP-PER-PL-02-001, Rev. 5, Piping Material Class Description	The Pipe Stress Design Criteria document specifies use of ASME B31.3 as the design code for the WTP piping. ASME B31.3 requires provision be made to safely contain or relieve any pressure to which the piping may be subjected. ASME B31.3 piping not protected by a pressure relieving device, or that can be isolated from a pressure reliving device must be designed for at least the highest pressure that can be developed. The Piping Material Class Description document lists bounding temperature/pressure limits for each piping material class.
	Maximum flows and any unusual operating stresses are identified	Drawings and System Descriptions listed above under References; 24590-WTP-DC-PS-01-001, Rev 3, Pipe Stress Design Criteria including "Pipe Stress Criteria" and "Span Method Criteria"; 24590-WTP-PER-PL-02-001, Rev. 5, Piping Material Class Description	The expected flow paths for the ancillary equipment are identified on the P&ID drawings. The Pipe Stress Design Criteria document specifies the ASME B31.3 code for piping design. This code requires piping to be designed to the highest pressure that can be developed in a piping system assuring that maximum operating stresses remain within code allowables. The Piping Material Class Description document lists the bounding pressure and temperature limits for each piping material class.

	Information Assessed	Source of Information	Discussion
Secondary Containment	Ancillary equipment is designed with secondary containment that is constructed of materials compatible with the waste and of sufficient strength to prevent failure (pressure gradients, waste, climatic conditions, daily operations), provided with a leak-detection system, and designed to drain and remove liquids.	Drawings listed above under References	The ancillary equipment considered in this assessment is located in accessible process cells. The Spent Resin Dewatering Moisture Separation equipment is housed in Process Cells P-0119 and P-0121A in the northeast zone of the PTF. Secondary containment for ancillary equipment within these rooms is provided by the liners, sumps and special protective coatings as shown on the elevation 0'-0" general arrangement drawing and is outside the scope of this integrity assessment.

	Information Assessed	Source of Information	Discussion
Design	Ancillary equipment design standards are appropriate and adequate for the equipment's intended use.	24590-PTF-M6-RDP-00002, Rev. 0, P&ID – PTF Ion Exchange Spent Resin Collection and Dewatering; 24590-PTF-3PS-MWD0-T0003, Rev. 0 Engineering Specification for RDP Spent Resin Dewatering Equipment Package; ASME B31.3 Code, Process Piping, 1996 Edition, American Society of Mechanical Engineers; Material Requisition No: 24590-CM-MRA-MWD0-00005, Rev. 1, Spent Resin Dewatering System, MR Section 2 – Technical Specifications (Rev. 2, November 26, 2002) and Supplements –S01 and –S0002	The Engineering Specification for RDP Spent Resin Dewatering Equipment Package identifies ASME B31.3 as the design code for ancillary equipment in this vendor package. Additional supplementary design and fabrication requirements are also specified in both the Engineering Specification and the Material Requisition. The P&ID drawing identifies the ancillary equipment in this system as Quality Level Commercial Grade (CM) and Seismic Category (SC-III). These codes and standards are acceptable and adequate for the design of the ancillary equipment for the intended service.
	If the ancillary equipment to be used is not built to a design standard, the design calculations demonstrate sound engineering principles of construction.	24590-PTF-3PS-MWD0-T0003, Rev. 0 Engineering Specification for RDP Spent Resin Dewatering Equipment Package; ASME B31.3 Code, Process Piping, 1996 Edition, American Society of Mechanical Engineers	The ancillary equipment is built to a design standard. The Engineering Specification for RDP Spent Resin Dewatering Equipment Package specifies that ancillary equipment is to be designed in accordance with ASME B31.3.
	Ancillary equipment has adequate strength at the end of its design life to withstand the operating pressure, operating temperature, thermal expansion, and seismic loads. Equipment is protected against physical damage and excessive stress due to settlement, vibration, expansion, or contraction.	24590-PTF-M6-RDP-00002, Rev. 0, P&ID – PTF Ion Exchange Spent Resin Collection and Dewatering; 24590-PTF-3PS-MWD0-T0003, Rev. 0 Engineering Specification for RDP Spent Resin Dewatering Equipment Package; ASME B31.3 Code, Process Piping, 1996 Edition, American Society of Mechanical Engineers; 24590-WTP-3PS-FB01-T0001, Rev. 1, Engineering Specification for Structural Design Loads for Seismic Category III & IV Equipment and Tanks; Uniform Building Code (UBC), 1997 Edition, International Conference of Building Officials; 24590-WTP-DB-ENG-01-001, Rev 1B, Basis of Design	The Engineering Specification for RDP Spent Resin Dewatering Equipment Package identifies ASME B31.3 as the design code for ancillary equipment in this vendor package. It also specifies a design life of 40 years for passive ancillary equipment components. ASME B31.3 requires explicit consideration of operating pressure, operating temperature, thermal expansion/contraction, settlement, vibration, and corrosion allowance in the design of piping. The Uniform Building Code is used to provide appropriate seismic design requirements for Seismic Category (SC-III) ancillary equipment as specified in the Engineering Specification for Structural Design Loads for Seismic Category III & IV Equipment and Tanks. These requirements and codes and standards are adequate to assure that the ancillary equipment will have adequate strength at end of life to resist all anticipated loading conditions.

	Information Assessed	Source of Information	Discussion
Supports	Ancillary equipment supports are adequately designed.	24590-PTF-3PS-MWD0-T0003, Rev. 0 Engineering Specification for RDP Spent Resin Dewatering Equipment Package; ASME B31.3 Code, Process Piping, 1996 Edition, American Society of Mechanical Engineers; AISC, Allowable Stress Design (ASD), 1989, American Institute of Steel Construction Uniform Building Code (UBC), 1997 Edition, International Conference of Building Officials	The Engineering Specification for RDP Spent Resin Dewatering Equipment Package identifies ASME B31.3 as the design code for ancillary equipment in this vendor package. It also specifies that the equipment comprising the RDP Spent Resin Dewatering Equipment Package will be mounted on a common structural skid. The equipment supports on the skid and the skid itself are to be designed for all loadings specified in ASME B31.3 and for SC-III seismic design level loads. The structural design is to be in accordance with the AISC ASD methods and the UBC. Analysis of supports is by manual calculation or approved computer programs. These are appropriate codes and standards for design of ancillary equipment supports over the range of conditions identified for these systems. Design standards for vessel internal equipment supports are discussed in the integrity assessment for each system vessel.
Connections	Seams and connections are adequately designed.	24590-PTF-3PS-MWD0-T0003, Rev. 0 Engineering Specification for RDP Spent Resin Dewatering Equipment Package; ASME B31.3 Code, Process Piping, 1996 Edition, American Society of Mechanical Engineers; ASME Boiler and Pressure Vessel Code, Section IX, Welding and Brazing Qualifications; ASME/ANSI B16.5, 1988 Edition, Piping Flanges and Flanged Fittings	The Engineering Specification for RDP Spent Resin Dewatering Equipment Package identifies ASME B31.3 as the design code for ancillary equipment in this vendor package. Welding is to be performed in accordance with the requirements of ASME B31.3 and the ASME B&PV Code, Section IX. Flanges are to be designed in accordance with ASME B16.5 where flanged connections are allowed for ancillary equipment. These are adequate and appropriate codes and standards for design and fabrication of the ancillary equipment seams and connections.
Frost Heave	The system will withstand the effects of frost heave.	System Description listed above under References; 24590-WTP-DC-ST-01-001, Rev. 2, Structural Design Criteria	The RDP-VSL-00004 ancillary equipment considered in this assessment is located in process cells P-0119 and P-0121A at elevation 0'-0" in the PTF, as discussed in the System Description. The Structural Design Criteria requires that all structural foundations shall extend into the surrounding soil below the frost line to preclude frost heave. The frost line is 30 in. below grade. The PTF building foundations are not subject to frost heave; therefore, the ancillary equipment located inside the building is not subject to the effects of frost heave.

	Information Assessed	Source of Information	Discussion
Waste Characteristics	Characteristics of the waste to be stored or treated have been identified (ignitable, reactive, toxic, specific gravity, vapor pressure, flash point, temperature)	Plant Item Material Selection Data Sheet listed above under References; 24590-WTP-PER-PR-03-001, Rev. 1, Prevention of Hydrogen Accumulation in WTP Tank Systems and Miscellaneous Treatment Unit Systems; 24590-WTP-PER-PR-03-002, Rev. 1, Toxic Vapors and Emissions from WTP Tank Systems and Miscellaneous Treatment Unit Systems	The Prevention of Hydrogen Accumulation in WTP Tank Systems and Miscellaneous Treatment Unit Systems document indicates that flammable or explosive concentrations of hydrogen are not expected in the RDP-VSL-00004 ancillary equipment. Similarly, the Toxic Vapors and Emissions from WTP Tank Systems and Miscellaneous Treatment Unit Systems document provides a summary of the PTF ancillary equipment design features that provide for confinement and treatment of chronically toxic vapors and emissions during normal operations, abnormal operations, and during and after a design level seismic event. The Cs IX transport liquor chemistry listed in the Plant Item Material Selection Data Sheet represents the temperature range and chemistry of the fluids handled in this ancillary equipment.
	Ancillary equipment is designed to handle the wastes with the characteristics defined above and any treatment reagents.	24590-PTF-3PS-MWD0-T0003, Rev. 0 Engineering Specification for RDP Spent Resin Dewatering Equipment Package; 24590-PTF-M6-RDP-00002, Rev. 0, P&ID – PTF Ion Exchange Spent Resin Collection and Dewatering; 24590-WTP-3PS-P000-T0001, Rev. 2, Engineering Specification for Piping Material Classes	The Engineering Specification for RDP Spent Resin Dewatering Equipment Package provides the operating temperatures, chemistry, and residual activity for the spent ion exchange resin and transport liquor for use by the vendor in design for material selection. This specification indicates that the only waste handled in this system is spent resin and transport liquor. The P&ID drawing and the Engineering Specification for Piping Material Classes identify the ancillary equipment materials as 316L stainless steel.

	Information Assessed	Source of Information	Discussion
Compatibility	The pH range of the waste, waste temperature and the corrosion behavior of the structural materials are adequately addressed. Ancillary equipment material and protective coatings ensure the ancillary equipment structure is adequately protected from the corrosive effects of the waste stream and external environments. The protection is sufficient to ensure the equipment will not leak or fail for the design life of the system.	24590-PTF-3PS-MWD0-T0003, Rev. 0 Engineering Specification for RDP Spent Resin Dewatering Equipment Package; 24590-PTF-M6-RDP-00002, Rev. 0, P&ID – PTF Ion Exchange Spent Resin Collection and Dewatering; 24590-WTP-3PS-P000-T0001, Rev. 2, Engineering Specification for Piping Material Classes;	The Engineering Specification for RDP Spent Resin Dewatering Equipment Package provides the operating temperatures, chemistry, and residual activity for the spent ion exchange resin and transport liquor for use by the vendor in design for material selection. This specification requires that the Equipment Package be designed for a 40 year service life. This specification indicates that the only waste handled in this system is spent resin and transport liquor. It also requires the ancillary equipment to be designed in accordance with the P&ID drawing and the Engineering Specification for Piping Material Classes. The drawing and specification identify the the ancillary equipment as 316L stainless steel. Therefore, the ancillary equipment will provide the expected design service life.
Corrosion Allowance	Corrosion allowance is adequate for the intended service life of the ancillary equipment.	24590-PTF-3PS-MWD0-T0003, Rev. 0 Engineering Specification for RDP Spent Resin Dewatering Equipment Package; 24590-PTF-M6-RDP-00002, Rev. 0, P&ID – PTF Ion Exchange Spent Resin Collection and Dewatering; 24590-WTP-3PS-P000-T0001, Rev. 2, Engineering Specification for Piping Material Classes;	The Engineering Specification for RDP Spent Resin Dewatering Equipment Package requires the vendor to design the ancillary equipment using the information on the P&ID drawing and in the Engineering Specification for Piping Material Classes. The P&ID drawing identifies the ancillary equipment piping classes as S11B and S12A. These lines are 316L stainless steel with corrosion/erosion allowances as reported in the Engineering Specification for Piping Material Classes. The corrosion allowance is adequate for the intended service life.

	Information Assessed	Source of Information	Discussion
Strength	Pressure controls (vents and relief valves) are adequately designed to ensure pressure relief if normal operating pressures in the vessels are exceeded.	24590-PTF-3PS-MWD0-T0003, Rev. 0 Engineering Specification for RDP Spent Resin Dewatering Equipment Package; 24590-PTF-M6-RDP-00002, Rev. 0, P&ID – PTF Ion Exchange Spent Resin Collection and Dewatering; 24590-WTP-3PS-P000-T0001, Rev. 2, Engineering Specification for Piping Material Classes	The Engineering Specification for RDP Spent Resin Dewatering Equipment Package identifies ASME B31.3 as the design code for ancillary equipment in this vendor package. ASME B31.3 requires provision be made to safely contain or relieve any pressure to which the piping may be subjected. ASME B31.3 piping not protected by a pressure relieving device, or that can be isolated from a pressure reliving device must be designed for at least the highest pressure that can be developed. The Engineering Specification for Piping Material Classes lists bounding temperature/pressure limits for each piping material class.
	Maximum flows and any unusual operating stresses are identified	24590-PTF-M6-RDP-00002, Rev. 0, P&ID – PTF Ion Exchange Spent Resin Collection and Dewatering; 24590-PTF-3PS-MWD0-T0003, Rev. 0 Engineering Specification for RDP Spent Resin Dewatering Equipment Package; 24590-WTP-3PS-P000-T0001, Rev. 2, Engineering Specification for Piping Material Classes	The expected flow paths for the ancillary equipment are identified on the P&ID drawing. The Engineering Specification for RDP Spent Resin Dewatering Equipment Package identifies ASME B31.3 as the design code for ancillary equipment in this vendor package. This code requires piping to be designed to the highest pressure that can be developed in a piping system assuring that maximum operating stresses remain within code allowables. The Engineering Specification for Piping Material Classes lists the bounding pressure and temperature limits for each piping material class.
Secondary Containment	Ancillary equipment is designed with secondary containment that is constructed of materials compatible with the waste and of sufficient strength to prevent failure (pressure gradients, waste, climatic conditions, daily operations), provided with a leak-detection system, and designed to drain and remove liquids.	24590-PTF-3PS-MWD0-T0003, Rev. 0 Engineering Specification for RDP Spent Resin Dewatering Equipment Package; 24590-PTF-P1-P01T-P0001, Rev. 3, Pretreatment Facility General Arrangement Plan at EL. 0'-0"	The ancillary equipment considered in this assessment is located in accessible process cells. The Spent Resin Dewatering Moisture Separation equipment is housed in Process Cells P-0119 and P-0121A in the northeast zone of the PTF as discussed in the Engineering Specification for RDP Spent Resin Dewatering Equipment Package. Secondary containment for ancillary equipment within these rooms is provided by the liners, sumps and special protective coatings, as shown on the PTF elevation 0'-0" general arrangement drawing, and is outside the scope of this integrity assessment.

24590-CM-HC4-HXYG-00138	- 02 - 00045	00B
PO/SCT	Submittal	Rev

Job No. 24590

Bechtel National, Inc.

SUPPLIER DOCUMENT STATUS

1. [X] **Work may proceed.**
2. [ ] **Revise and resubmit. Work may proceed subject to resolution of indicated comments.**
3. [ ] **Revise and resubmit. Work may not proceed.**
4. [ ] **Review not required. Work may proceed.**

Permission to proceed does not constitute acceptance or approval of design details, calculations, analyses, test methods, or materials developed or selected by the supplier and does not relieve supplier from full compliance with contractual obligations

REVIEWED -

G-321 Document Category N/A
[From Supplement A to G-321-E (E) or G-321-V (V), as applicable, or "N/A" if SSRS is used]

Supersedes BNI Document No. N/A Rev.
[When applicable]

Accepted by DC Pfluger (Print Name) D C Pfluger (Signature) 10/7/04 (Date)

Released by N/A
[When applicable] Print Name Signature Date

TP0406_34 7-04

SUBCONTRACT SUBMITTAL

R10398417

COGEMA-IA-070, Rev.1

IQRPE REVIEW
OF
THE PRETREATMENT FACILITY (PTF)
CESIUM NITRIC ACID RECOVERY PROCESS (CNP)
MISCELLANEOUS TREATMENT UNIT SYSTEMS

"I, Tarlok Hundal, have reviewed, and certified a portion of the design of a new tank system or component located at the Hanford Waste Treatment Plant, owned/operated by Department of Energy, Office of River Protection, Richland, Washington. My duties were independent review of the current design for the Pretreatment Facility (PTF) Cesium Nitric Acid Recovery Process (CNP) Miscellaneous Treatment Unit Systems as required by the Dangerous Waste Regulations, namely, WAC 173-303-640(3) applicable paragraphs, i.e., (a) through (g)."

"I certify under penalty of law that I have personally examined and am familiar with the information submitted in this document and all attachments and that, based on my inquiry of those individuals immediately responsible for obtaining the information, I believe that the information is true, accurate, and complete. I am aware that there are significant penalties for submitting false information, including the possibility of fine and imprisonment."

The documentation reviewed indicates that the design intent fully satisfies the requirements of the WAC.

The attached review is ten (10) pages numbered one (1) through ten (10).

TARLOK SINGH HUNDAL
STATE OF WASHINGTON
20213
REGISTERED
PROFESSIONAL ENGINEER

EXPIRES: 02/15/06

Signature

10/7/04
Date

24590-CM-HC4-HXYG-00138-02-00045 Rev.006

STRUCTURAL INTEGRITY ASSESSMENT OF THE PRETREATMENT FACILITY (PTF) CESIUM NITRIC ACID RECOVERY PROCESS (CNP) MISCELLANEOUS TREATMENT UNIT SYSTEMS

COGEMA-IA-070
REV. 1

Please note that source, special nuclear and byproduct materials, as defined in the Atomic Energy Act of 1954 (AEA), are regulated at the U.S. Department of Energy (DOE) facilities exclusively by DOE acting pursuant to its AEA authority. DOE asserts, that pursuant to the AEA, it has sole and exclusive responsibility and authority to regulate source, special nuclear, and byproduct materials at DOE-owned nuclear facilities. Information contained herein on radionuclides is provided for process description purposes only.

Scope	Scope of this Integrity Assessment	This integrity assessment includes the following Miscellaneous Treatment Units (MTUs) for the PTF Cesium Nitric Acid Recovery Process System (CNP), located in various cells/rooms of the PTF building: 1. Cesium Evaporator Separator Vessel (CNP-EVAP-00001) and Cesium Evaporator Concentrate Reboiler (CNP-HX-00001) as shown on drawing 24590-PTF-M6-CNP-P0008. 2. Cesium Evaporator Nitric Acid Rectifier (CNP-DISTC-00001) and Cesium Evaporator Primary Condenser (CNP-HX-00002), Cesium Evaporator Inter-Condenser (CNP-HX-00003), and Cesium Evaporator After-Condenser (CNP-HX-00004) as shown on drawing 24590-PTF-M6-CNP-P0010. <u>Note:</u> In this report, the above listed MTUs will interchangeably be referred to as Plant Items and for simplicity each unit will be called as below: Cesium Evaporator Separator Vessel : Separator Cesium Evaporator Concentrate Reboiler : Reboiler Cesium Evaporator Nitric Acid Rectifier: Rectifier Cesium Evaporator Primary Condenser : Primary Condenser Cesium Evaporator Inter-Condenser : Inter-Condenser Cesium Evaporator After-Condenser: After-Condenser.
Summary of Assessment		For each item of "Information Assessed" (i.e., Criteria) on the following pages, the items listed under "Source of Information" were reviewed and found to furnish adequate design controls and requirements to ensure the design intent fully satisfies the requirements of Washington Administrative Code, WAC-173-303-640, *Dangerous Waste Regulations* for Tank Systems.

References	Material Requisition, Specifications, and Drawings.	Material Requisition: 24590-QL-MRA-MEVV-00002, Rev. 1, including MRS Nos. S01, S0002, S0003, and S0004 to Rev. 1 of the MR. The following Specifications with their appropriate number and revision are included in the above listed Material Requisition: Engineering Specification for Pressure Vessel Design and Fabrication; Engineering Specification for Seismic Qualification Criteria for Pressure Vessels; Engineering Specification for Shell and Tube Heat Exchangers; Specification for Welding of Pressure Vessels, Heat Exchangers, and Boilers; General Specification for Supplier Quality Assurance Program Requirements; Specification for Positive Material Identification (PMI); General Specification for Packing, Shipping, Handling, and Storage; Engineering Specification for Pressure Vessel Fatigue Analysis; Engineering Specification for Seismic Qualification of Seismic Category I/II Equipment and Tanks; Engineering Specification for Forced Circulation Vacuum Evaporator System; Engineering Specification for Cesium Nitric Acid Recovery Forced Circulation Vacuum Evaporator System. Drawings: 24590-PTF-M6-CNP-P0008, Rev. 1, P&ID – PTF Cesium Nitric Acid Recovery Process System Evaporator Vessel; 24590-PTF-M6-CNP-P0010, Rev. 1, P&ID – PTF Cesium Nitric Acid Recovery Process System Rectifier and Condensers; 24590-PTF-M5-V17T-P0014, Rev. 1, Process Flow Diagram Cesium Nitric Acid Recovery Process System CNP. 24590-PTF-P1-P01T-P0001, Rev. 4, Pretreatment Facility General Arrangement Plan at El. 0'-0"; 24590-PTF-P1-P01T-P0002, Rev. 2, Pretreatment Facility General Arrangement Plan at El. 28' -0"; 24590-PTF-P1-P01T-P0003, Rev. 0, Pretreatment Facility General Arrangement Plan at El. 56' -0"; 24590-PTF-P1-P01T-P0004, Rev. 0, Pretreatment Facility General Arrangement Plan at El. 77' -0"; 24590-PTF-P1-P01T-P0009, Rev. 8, Pretreatment Facility General Arrangement Sect. C-C; 24590-PTF-P1-P01T-P0010, Rev. 5, Pretreatment Facility General Arrangement Sect. D-D; 24590-PTF-P1-P01T-P0015, Rev. 7, Pretreatment Facility General Arrangement Sect. M-M and Sect. N-N.

References	System Description, Mechanical Data Sheets, and Plant Item Material Selection Data Sheets	System Description: 24590-PTF-3YD-CNP-00001, Rev. 0, System Description for Cesium Nitric Acid Recovery Process - System CNP (including SDCN No. 24590-PTF-3YN-CNP-00001). Mechanical Data Sheets: 24590-PTF-MWD-CNP-00001, Rev. 2, Mechanical Data Sheet: Cesium Evaporator Nitric Acid Rectifier (CNP-DISTC-00001); 24590-PTF-MED-CNP-00003, Rev. 2, Mechanical Data Sheet: Cesium Evaporator Primary Condenser (CNP-HX-00002); 24590-PTF-MED-CNP-00004, Rev. 3, Mechanical Data Sheet: Cesium Evaporator After-Condenser (CNP-HX-00004); 24590-PTF-MED-CNP-00005, Rev. 2, Mechanical Data Sheet: Cesium Evaporator Concentrate Reboiler (CNP-HX-00001); 24590-PTF-MVD-CNP-00006, Rev. 3, Mechanical Data Sheet: Cesium Evaporator Separator Vessel, (CNP-EVAP-00001); 24590-PTF-MED-CNP-00010, Rev. 1, Mechanical Data Sheet: Cesium Evaporator Inter-Condenser (CNP-HX-00003). Plant Item Material Selection Data Sheets: 24590-PTF-N1D-CNP-P0001, Rev. 0, Plant Item Material Selection Data Sheet, CNP-DISTC-00001 (PTF) Cs Evaporator Nitric Acid Rectifier; 24590-PTF-N1D-CNP-P0002, Rev. 0, Plant Item Material Selection Data Sheet, CNP-HX-00002 (PTF) Cs Evaporator Primary Condenser; 24590-PTF-N1D-CNP-P0003, Rev. 0, Plant Item Material Selection Data Sheet, CNP-HX-00003 (PTF) Cs Evaporator Inter-Condenser; 24590-PTF-N1D-CNP-P0004, Rev. 0, Plant Item Material Selection Data Sheet, CNP-HX-00001 (PTF) Cs Evaporator Concentrate Reboiler; 24590-PTF-N1D-CNP-P0005, Rev. 0, Plant Item Material Selection Data Sheet, CNP-EVAP-00001 (PTF) Cs Evaporator Separator Vessel; 24590-PTF-N1D-CNP-P0012, Rev. 0, Plant Item Material Selection Data Sheet, CNP-HX-00004 (PTF) Cs Evaporator After-Condenser.

Information Assessed		Source of Information	Assessment
Design	Plant Item design standards are appropriate and adequate for the Plant Item's intended use.	Drawings, Specifications, and Mechanical Data Sheets listed above under References; American Society of Mechanical Engineers (ASME) Boiler & Pressure Vessel (B & PV) Code, Section VIII, Division 1, Rules for Construction of Pressure Vessels; TEMA Standards, 8th Edition, Standards of the Tubular Exchanger Manufacturers Association, Inc.	The Engineering Specification for Cesium Nitric Acid Recovery Forced Circulation Vacuum Evaporator System requires that all MTUs are to be designed in accordance with the requirements specified in the Engineering Specification for Pressure Vessel Design and Fabrication. This specification requires that all the MTUs are to be designed to ASME B & PV Code, Section VIII, Division 1. Supplementary design requirements for the shell and tube heat exchangers are specified in the Engineering Specification for Shell and Tube Heat Exchangers and TEMA Standards. These design requirements are appropriate for the unfired MTUs operating with mixed waste solutions over the pressure and temperature ranges specified for these Plant Items. Supplementary requirements listed in the Engineering Specification for Cesium Nitric Acid Recovery Forced Circulation Vacuum Evaporator System address pressure vessel fatigue analysis, positive material identification, standard fabrication tolerances, acceptable welding procedures for the MTUs and appurtenances, welder qualifications and testing records, NDE inspections and records, quality assurance requirements, and packaging, shipping, handling and storage requirements. Mechanical Data Sheets and drawings specify that all MTUs are to be designed and fabricated to Seismic Category (SC-I) and Quality Level (QL-1) requirements. Seismic Categories and Quality Levels are discussed in the Engineering Specification for Pressure Vessel Design and Fabrication. Code stamps and National Board Registration are to be provided for all MTUs. These codes and standards are acceptable and adequate for the design of the MTUs for their intended use.

Information Assessed		Source of Information	Assessment
Design	If the Plant Item to be used is not built to a design standard, the design calculations demonstrate sound engineering principles of construction.	Specifications and Mechanical Data Sheets listed above under References; American Society of Mechanical Engineers (ASME) Boiler & Pressure Vessel (B & PV) Code, Section VIII, Division 1, Rules for Construction of Pressure Vessels.	The Mechanical Data Sheets require Plant Item pressure containment boundary design to be compliant with that of ASME B & PV Code, Section VIII, Division 1, and code stamped. The Engineering Specification for Pressure Vessel Design and Fabrication requires that these ASME B & PV Code, Section VIII, Division 1 items be delivered after design, fabrication, inspection and testing with ASME stamps and that the items be registered with the National Board. These are shop fabricated items for mixed waste service in the Pretreatment Facility. The design standards identified above are appropriate and adequate for these MTUs.
	Plant Item has adequate strength at the end of its design life to withstand the operating pressure, operating temperature, thermal expansion, and seismic loads. Equipment is protected against physical damage and excessive stress due to settlement, vibration, expansion, or contraction.	Specifications listed above under References; American Society of Mechanical Engineers (ASME) Boiler & Pressure Vessel (B & PV) Code, Section VIII, Division 1, Rules for Construction of Pressure Vessels.	The Engineering Specification for Cesium Nitric Acid Recovery Forced Circulation Vacuum Evaporator System requires that all the MTUs are to be designed in accordance with the requirements specified in the Engineering Specification for Pressure Vessel Design and Fabrication. This specification requires that all MTUs are to be designed to ASME B & PV Code, Section VIII, Division 1. These specifications and codes require consideration of the operating pressures, temperatures, thermal expansion, seismic loads, and corrosion allowance in the design process. Supplementary general seismic design criteria are specified in the Engineering Specification for Seismic Qualification Criteria for Pressure Vessels to provide for the Plant Item seismic design analysis. Detailed seismic design analysis information is provided in the Engineering Specification for Seismic Qualification of Seismic Category I/II Equipment and Tanks. These are appropriate requirements and criteria to ensure the Plant Items have adequate strength to withstand all loads for the specified design life of 40 years.

Information Assessed		Source of Information	Assessment
Foundation	Plant Item foundation will maintain the load of a full Plant Item.	Specifications listed above under References; American Society of Mechanical Engineers (ASME) Boiler & Pressure Vessel (B & PV) Code, Section VIII, Division 1, Rules for Construction of Pressure Vessels; AISC N690, Specification for the Design, Fabrication, and Erection of Steel Safety-Related Structures for Nuclear Facilities; 24590-WTP-DB-ENG-01-001, Rev. 1B, Basis of Design.	The Engineering Specification for Cesium Nitric Acid Recovery Forced Circulation Vacuum Evaporator System requires all the MTUs to be furnished with support skids to be anchored to embedments on the walls and floors of the process cells and the hot cell. The skids are to be designed in accordance with the requirements of AISC N690. Foundation attachments of the MTUs to the support skids are to be designed in accordance with ASME B&PV Code, Section VIII, Division 1. Chapter 14 of the Basis of Design document requires that the Plant Item foundation design must be adequate to support the loads from full Plant Item. These codes and standards ensure that the equipment foundations will maintain the loads of full MTUs.
	If in an area subject to flooding, the Plant Item is anchored.	Specifications listed above under references.	Buoyant forces on an empty Plant Item in a flooded room are a standard design load case in the Specification for Pressure Vessel Design and Fabrication.
Frost Heave	Plant Item system will withstand the effects of frost heave.	24590-WTP-DC-ST-01-001, Rev. 3, Structural Design Criteria	The Structural Design Criteria requires that all structural foundations for outdoor equipment to extend a distance below grade that exceeds the 30" depth of the frost line. These Plant Items are located inside/interior of the PTF building. The PTF building foundation mat is 8 ft thick (below grade), therefore, the CNP MTUs located inside the building are not subject to the effects of frost heave.

Information Assessed		Source of Information	Assessment
Waste Characteristics	Characteristics of the waste to be stored or treated have been identified (ignitable, reactive, toxic, specific gravity, vapor pressure, flash point, temperature)	System Description and Plant Item Material Selection Data Sheets listed above under References; 24590-WTP-PER-03-002, Rev. 1, Toxic Vapors and Emissions from WTP Tank Systems and Miscellaneous Treatment Unit Systems; 24590-WTP-PER-PR-03-001, Rev. 1, Prevention of Hydrogen Accumulation in WTP Tank Systems and Miscellaneous Treatment Unit Systems; 24590-WTP-PSAR-ESH-01-002-02, Rev. 1A, Preliminary Safety Analysis Report (PSAR) to Support Construction Authorization; PT Facility Specific Information.	Chemical characteristics of the wastes treated in the MTUs are discussed in the Material Selection Data Sheets for each MTU. The System Description identifies the safety functions for all CNP MTUs to include primary confinement of the waste during normal operations, upset conditions, and during and after the Design Basis Earthquake event. Waste characteristics that are hazardous, such as ignitability, reactivity, and toxicity are appropriately addressed in the Toxic Vapors and Emissions document and Prevention of Hydrogen Accumulation document. The Prevention of Hydrogen Accumulation document identifies the Separator (CNP-EVAP-00001) as providing primary confinement of waste that pose hydrogen accumulation hazard. The mitigating systems for hydrogen control during normal operations, abnormal operations, and during and after a Design Basis Earthquake are described in above mentioned document. These systems provide appropriate and adequate hydrogen control as discussed in the PSAR.

Information Assessed		Source of Information	Assessment
Waste Characteristics	Plant Items are designed to handle the wastes with the characteristics defined above and any treatment reagents.	System Description and Plant Item Material Selection Data Sheets listed above under References.	Plant Items are designed to handle nitric acid solutions, vapor, and acidic condensates for a service life of 40 years as discussed in the Plant Item Material Selection Data Sheets. MTUs operating with more aggressive wastes are specified to be designed and fabricated using more resistant materials. The material specified for the Separator and tube-side of Reboiler is Hastelloy C-22 alloy and shell-side of Reboiler is Hastelloy C-22 and 316 stainless steel (maximum 0.030% C, dual certified), for the Rectifier is UNS N08367/N08926 (6% Molybdenum stainless steel alloy) for the most aggressive waste environments, and for the condensers contacting mildly acidic condensate is 304 stainless steel (maximum 0.030% C, dual certified). System Description document describes that 5M Sodium Hydroxide may be administered as a pH control reagent into the Separator, in order to ensure that nitric acid returned to the ion exchange columns is not overly acidic. All wastes handled in these MTUs are of similar composition as the eluate used for the elution of ion exchange resin columns.

Information Assessed		Source of Information	Assessment
Corrosion	Plant Item material, and protective coatings ensure the plant item structure is adequately protected from the corrosive effects of the waste stream and external environments. The protection is sufficient to ensure the equipment will not leak or fail for the design life of the system.	Drawings, System Description, Plant Item Material Selection Data Sheets, and Mechanical Data Sheets listed above under References	The Drawings and CNP System Description identify that the Separator is located in a black cell at Elevation 28'-0" (P-0112) in the PTF with a design life of 40 years as routine access is not intended, however, this plant item's head extends to Elevation 56'-0", where the internal mist eliminator may be serviced as discussed in the System Description. The Reboiler is similarly specified for a 40-year design life and is not intended to be routinely serviced, but is placed in the hot cell (P0123) and may be remotely serviced or replaced. Plant Item Material Selection Data Sheets and Mechanical Data Sheets specify materials for these MTUs. The material for Separator and tube-side of Reboiler is specified as Hastelloy C-22 alloy (UNS N06022-high nickel alloy) and for Reboiler shell-side is Hastelloy C-22 and 316 stainless steel (maximum 0.030% C; dual certified). Other CNP MTUs are in R3/C3 areas which are deemed contact maintainable but are also specified for 40-year design life as they are required for continuing operation of the facility. Material specified for Rectifier is UNS N08367/N08926 (6% Molybdenum stainless steel alloy) and for condensers it is 304 stainless steel (maximum 0.030% C; dual certified). The material selections and corrosion allowances adequate and appropriate to ensure that the units will provide the specified service life for the waste streams identified in the Plant Item Material Selection Data Sheets.
Corrosion Allowance	Corrosion allowance is adequate for the intended service life of the Plant Item.	Plant Item Material Selection Data Sheets and Mechanical Data Sheets listed above under References.	Plant Item Material Selection Data Sheets and the Mechanical Data Sheets, specify uniform corrosion allowance of 0.04 in. for 40-year design life for these MTUs. This allowance is adequate for the above specified material for the intended use of these MTUs.

Information Assessed		Source of Information	Assessment
Pressure Relief	Pressure controls (vents and relief valves) are adequately designed to ensure pressure relief if normal operating pressures in the Plant Items are exceeded.	Drawings, System Description, and Mechanical Data Sheets listed above under References.	The System Description document provides a discussion of the normal operating condition for the CNP MTUs as being under vacuum, in order to reduce boiling temperatures of the nitric acid, which is less than the internal and external design pressures listed on the Mechanical Data Sheets for the Plant Items. Vacuum is induced within the Plant items by high pressure steam ejectors acting upon the Primary and Inter-Condensers (CNP-HX-00002 and -00003). Vacuum maintained through the After Condenser (CNP-HX-00004) is provided by the PTF Process Vessel Vent Extraction System (PVV). Although each plant item is designed for full vacuum operation, the pressure control is provided at pressure relief valve (PV-0113) shown on the drawings, which allows filtered facility air into the condenser offgas line prior to the second steam ejector (CNP-EJCTR-00010B) in order to allow operating pressure to increase. This pressure control provides protection for the plant items, and their ancillary equipment as discussed in the Engineering Specification for Cesium Nitric Acid Recovery Forced Circulation Vacuum Evaporator System.
Secondary Containment	Plant Item is designed with secondary containment that is constructed of materials compatible with the waste and of sufficient strength to prevent failure (pressure gradients, waste, climatic conditions, daily operations), provided with a leak-detection system, and designed to drain and remove liquids.	Drawings and System Description listed above under References.	The Plant Items considered in this assessment are located in above grade process cells, a central hot cell, and process rooms as shown on the drawings and as described in the System Description document. The Reboiler (CNP-HX-00001) is housed at Elevation 0'-0" in hotcell P-0123; the Separator (CNP-EVAP-00001) is housed in black cell P-0112 at Elevation 28'-0" (to allow its head and mist eliminator to be serviced at Elevation 56'-0"); the Rectifier (CNP-DISTC-00001) is housed in room P-0320 at Elevation 56'-0"; and the three Condensers (CNP-HX-00002, -00003, and -00004) are housed in room P-0430 at Elevation 77'-0". Secondary containment for these Plant Items within the cells and rooms is provided by the steel liners, special protective coatings, and sumps in these areas as appropriate and is outside the scope of this integrity assessment.

24590-CM-HC4-HXYG-00138	- 02 - 00046	00A
PO/SCT	**Submittal**	**Rev**

Job No. 24590

Bechtel National, Inc.

SUPPLIER DOCUMENT STATUS

1. [X] **Work may proceed.**
2. [ ] **Revise and resubmit. Work may proceed subject to resolution of indicated comments.**
3. [ ] **Revise and resubmit. Work may not proceed.**
4. [ ] **Review not required. Work may proceed.**

Permission to proceed does not constitute acceptance or approval of design details, calculations, analyses, test methods, or materials developed or selected by the supplier and does not relieve supplier from full compliance with contractual obligations.

REVIEWED										

G-321 Document Category N/A
[From Supplement A to G-321-E (E) or G-321-V (V), as applicable, or "N/A" if SSRS is used]

Supersedes BNI Document No. N/A Rev. _____
[When applicable]

Accepted by DC Pfluger DC Pfluger 9/29/04
Print Name Signature Date

Released by N/A
[When applicable] Print Name Signature Date

TP0406_34 7-04

SUBCONTRACT SUBMITTAL

Best Available Copy

R10384058

IQRPE REVIEW
OF
PRETREATMENT FACILITY (PTF), PULSE JET VENTILATION SYSTEM (PJV), DRAIN COLLECTION VESSEL, PJV-VSL-00002

"I, Tarlok Hundal, have reviewed, and certified a portion of the design of a new tank system or component located at the Hanford Waste Treatment Plant, owned/operated by Department of Energy, Office of River Protection, Richland, Washington. My duties were independent review of the current design for the Pretreatment Facility (PTF), Pulse Jet Ventilation System (PJV), Drain Collection Vessel, PJV-VSL-00002 as required by the Dangerous Waste Regulations, namely, WAC 173-303-640(3) (applicable paragraphs (i.e., (a) through (g)."

"I certify under penalty of law that I have personally examined and am familiar with the information submitted in this document and all attachments and that, based on my inquiry of those individuals immediately responsible for obtaining the information, I believe that the information is true, accurate, and complete. I am aware that there are significant penalties for submitting false information, including the possibility of fine and imprisonment."

The documentation reviewed indicates that the design intent fully satisfies the requirements of the WAC.

The attached review is six pages numbered 1 through 6.

TARLOK SINGH HUNDAL
STATE OF WASHINGTON
20213
REGISTERED
PROFESSIONAL ENGINEER

EXPIRES: 02/15/06

Signature

9/27/04
Date

24590-CM-HC4-HXYG-00158-02-00041 Rev 00A

STRUCTURAL INTEGRITY ASSESSMENT OF THE PRETREATMENT FACILITY (PTF), PULSE JET VENTILATION SYSTEM (PJV), DRAIN COLLECTION VESSEL, PJV-VSL-00002

COGEMA-IA-071

REV. 0

Please note that source, special nuclear and byproduct materials, as defined in the Atomic Energy Act of 1954 (AEA), are regulated at the U.S. Department of Energy (DOE) facilities exclusively by DOE acting pursuant to its AEA authority. DOE asserts, that pursuant to the AEA, it has sole and exclusive responsibility and authority to regulate source, special nuclear, and byproduct materials at DOE-owned nuclear facilities. Information contained herein on radionuclides is provided for process description purposes only.

Scope	Scope of this Integrity Assessment	This integrity assessment is for PJV Drain Collection Vessel (PJV-VSL-00002), located in cell (P-0102) at Elevation 0'-0" in the Pretreatment Facility.
References	Specifications, Drawings and Mechanical Data Sheet	The following Specifications are listed in the Material Requisition No. 24590-QL-MRC-MVA0-A0002, Rev. 0 (including Material Requisition Supplement Nos. S0001, S0002, S0007, and S0008 to Rev. 0 of the MR): Engineering Specification for Pressure Vessel Design and Fabrication; Engineering Specification for Seismic Qualification Criteria for Pressure Vessels; Specification for Welding of Pressure Vessels, Heat Exchangers and Boilers; General Specification for Supplier Quality Assurance Program Requirements; Specification for Positive Material Identification (PMI); General Specification for Packing, Shipping, Handling, and Storage; Engineering Specification for Pressure Vessel Fatigue Analysis; Engineering Specification for Seismic Qualification of Seismic Category I/II Equipment and Tanks. Drawings: 24590-PFT-MV-PJV-00001, Rev. 0, Equipment Assembly PJV Drain Collection vessel, PJV-VSL-00002 (Q); 24590-PTF-P1-P01T-P0001, Rev. 4, Pretreatment Facility General Arrangement Plan at El. 0'-0"; 24590-PTF-P1-P01T-P0008, Rev. 5, Pretreatment Facility General Arrangement Section B-B; 24590-PTF-P1-P01T-P0013, Rev. 5, Pretreatment Facility General Arrangement Sect. H-H and Sect. J-J; 24590-PTF-M6-PJV-P0001, Rev. 0, P&ID – PTF Pulse Jet Ventilation System Air Racks to Demisters; 24590-PTF-M6-PJV-P0002, Rev. 0, P&ID-PTF Pulse Jet Ventilation System Inlet Header to Demister Outlet; 24590-PTF-M5-V17T-P0021002, Rev. 0, Process Flow Diagram Pretreatment RFD/PJM Exhaust (PJV) Systems PVP/PVV/PJV. Mechanical Data Sheet: 24590-PTF-MVD-PJV-00003, Rev. 1, Mechanical Data Sheet for PJV Drain Collection Vessel (PJV-VSL-00002).
Summary of Assessment		For each item of "Information Assessed" (i.e., Criteria) on the following pages, the items listed under "Source of Information" were reviewed and found to furnish adequate design controls and requirements to ensure the design intent fully satisfies the requirements of Washington Administrative Code, WAC-173-303-640, *Dangerous Waste Regulations*.

	Information Assessed	Source of Information	Assessment
Design	Vessel design standards are appropriate and adequate for the vessel's intended use.	Specifications listed under Material Requisition, Drawings, and Mechanical Data Sheet listed above under References; ASME Boiler and Pressure Vessel Code, Section VIII, Division 1, Rules for Construction of Nuclear Power Plant Components, 1995; ASME Boiler and Pressure Vessel Code, Section VIII, Division 2, Alternative Rules; 24590-PTF-3YD-PJV-00001, Rev. C, System Description for PTF Pulse Jet Ventilation System (PJV) – (including SDCNs 24590-PTF-3YN-PJV-00002 and – 00003).	The Specification for Vessel Design and Fabrication requires the PJV Drain Collection Vessel, PJV-VSL-00002 and all appurtenances to be designed to the ASME Section VIII, Division 1 rules, which are appropriate for pressure vessels operating with mixed waste solutions over the pressure and temperature ranges specified for this vessel. Supplementary requirements are specified in the Engineering Specification for Pressure Vessel Design and Fabrication. Supplementary requirements address pressure vessel fatigue analysis, positive material identification, lifting attachment design, equipment drop evaluation, fabrication tolerances, acceptable welding procedures for the vessel and appurtenances, welder qualifications and testing records, NDE inspections and records, and lifting, packaging, shipping, handling and storage requirements. These are adequate and acceptable design standards for the intended use of the vessel. The vessel is vertical with a 120 in. ID and a height of 144 in. from bottom tangent line to top tangent line supported on a cylindrical skirt (approx. 8' high) which in turn is supported on a ring beam anchored to the concrete floor at Elev. 0'-0". The vessel's top and bottom elliptical heads and the shell are built with 1/2" minimum thick plate. The vessel has internal pipes supported from the top head. Material for the vessel's shell, heads, internals, and support is SA-240 304 stainless steel (0.030% maximum carbon content, dual certified) and is hereafter referred to as 304 stainless steel. The operating vessel volume is to be about 7,410 gallons and the total internal volume is to be about 8,980 gallons.
	If a non-standard vessel is to be used, the design calculations demonstrate sound engineering principles of construction.	Specifications listed under Material Requisition, Drawings, and Mechanical Data Sheet listed above under References.	The PJV Drain Collection Vessel, PJV-VSL-00002 is a standard ASME Section VIII vessel. The Mechanical Data Sheet requires that the ASME Section VIII, Division 1 vessels be delivered after design, fabrication, inspection and testing with an ASME code stamp and that the vessels be nationally registered. Supplemental design information is provided by the reference documents listed in the Source of Information column for utilizing sound engineering principles of construction of the vessel.

	Information Assessed	Source of Information	Assessment
Design	Vessel has adequate strength, after consideration of the corrosion allowance, to withstand the operating pressure, operating temperature, and seismic loads.	Specifications listed under Material Requisition, Drawings, and Mechanical Data Sheet listed above under References; 24590-PTF-3YD-PJV-00001, Rev. C, System Description for PTF Pulse Jet Ventilation System (PJV) – (including SDCNs 24590-PTF-3YN-PJV-00002 and – 00003).	The Mechanical Data Sheet identifies the vessel's operating pressure and temperature ranges, the materials selected for the vessel, the corrosion allowance, and the vessel quality level and seismic category, which determine the requirements for seismic design. The design specification for the vessel requires specific consideration of the operating pressures and temperatures and seismic loads in the design process. ASME Section VIII, Division 1 requires that the corrosion allowance thickness be excluded from the nominal vessel thickness when evaluating the adequacy of vessel components for these loads at the end of life. The Engineering Specification for Seismic Qualification Criteria for Pressure Vessels adopts ASME Section VIII, Division 2 design rules to address seismic design and analysis of the vessel. Detailed requirements for seismic load determination are furnished in the specification for Seismic Category I/II Equipment and Tanks. These codes and standards are adequate and appropriate for the design of the PJV vessel to withstand operating pressure and temperature loads and seismic loads for the specified design life.

	Information Assessed	Source of Information	Assessment
Foundation	Vessel foundation will maintain the load of a full vessel.	Specifications listed under Material Requisition above under References; AISC Manual of Steel Construction, 9th Edition, American Institute of Steel Construction; 24590-WTP-DB-ENG-01-001, Rev. 1B, Basis of Design.	The Engineering Specification for Pressure Vessel Design and Fabrication requires the use of ASME BPV Code, Section VIII, Division 1 and AISC Manual of Steel Construction for the design of the vessel supports. This code ensures an adequate design for the vessel supports. Chapter 14 of the Basis of Design document requires that the vessel foundation design must be adequate to support the loads from full vessel.
	If in an area subject to flooding, the vessel is anchored.	Specifications listed under Material Requisition under References.	Buoyant forces on an empty vessel in a flooded room are mandatory standard design loads in the Specification for Pressure Vessel Design and Fabrication.
	Vessel system will withstand the effects of frost heave.	24590-WTP-DC-ST-01-001, Rev. 3, Structural Design Criteria.	The Structural Design Criteria document requires that all structural foundations for outdoor equipment to extend a distance below grade that exceeds the 30" depth of the frost line. This vessel is located inside/interior of the building at (Elevation 0'-0" level), therefore, the vessel foundation is not subject to frost heave.

	Information Assessed	Source of Information	Assessment
Waste Characteristics	Characteristics of the waste to be stored or treated have been identified (ignitable, reactive, toxic, specific gravity, vapor pressure, flash point, storage temperature)	Mechanical Data Sheet listed above under References; Plant Item Material Selection Data Sheet, 24590-PTF-N1D-PJV-P0001, Rev. 0, PJV-VSL-00002 (PTF) PJV Drain Collection Vessel; 24590-PTF-3YD-PJV-00001, Rev. C, System Description for PTF Pulse Jet Ventilation System (PJV) – (including SDCNs 24590-PTF-3YN-PJV-00002 and – 00003); 24590-WTP-PER-03-002, Rev. 1, Toxic Vapors and Emissions from WTP Tank Systems and Miscellaneous Treatment Unit Systems; 24590-WTP-PER-03-001, Rev. 1, Prevention of Hydrogen Accumulation in WTP Tank Systems and Miscellaneous Treatment Unit Systems.	The Mechanical Data Sheet presents the waste specific gravity, storage temperatures and pressures. The Plant Item Material Selection Data Sheet addresses the pH range and chemical composition of the waste to select appropriate vessel materials and specify the corrosion allowance. The PJV vessel provides primary confinement of the waste during normal operations, abnormal operations, and during and after a Design Basis Earthquake. Waste characteristics that are hazardous, such as ignitability, reactivity, and toxicity are appropriately addressed in the Toxic Vapors and Emissions document and Prevention of Hydrogen Accumulation document. All PJV system motors and electrically driven equipment are grounded to prevent any ignition. The vessel drain pump operation provides recirculation and mixing of the drain liquid to reduce settling of the solids. The vessel is vented back to the PTF PJV system to prevent any build-up of flammable gases. However, the System Description document does not list the PJV Drain Collection Vessel (PJV-VSL-00002) as having a potential for accumulating flammable gases.
	Vessel is designed to store or treat the wastes with the characteristics defined above and any treatment reagents.	Plant Item Material Selection Data Sheet, 24590-PTF-N1D-PJV-P0001, Rev. 0, PJV-VSL-00002 (PTF) PJV Drain Collection Vessel; 24590-PTF-3YD-PJV-00001, Rev. C, System Description for PTF Pulse Jet Ventilation System (PJV) – (including SDCNs 24590-PTF-3YN-PJV-00002 and – 00003).	The Plant Item Material Selection Data Sheet demonstrates that the vessel is designed to process the wastes discussed above. The System Description discusses normal and abnormal operations for the PJV vessel.
	The waste types are compatible with each other.	24590-PTF-3YD-PJV-00001, Rev. C, System Description for PTF Pulse Jet Ventilation System (PJV) – (including SDCNs 24590-PTF-3YN-PJV-00002 and – 00003).	The System Description for the PTF PJV system does not describe any operations where incompatible wastes are mixed in these vessels for processing. The primary function of this vessel is to receive the condensate and/or flush water from the PTF PJV ventilation system headers and sub-headers drains. The accumulated condensate and flush water from the Drain Collection Vessel is transferred by the PJV drain transfer pumps (PJV-PMP-00001A/B) to the PWD plant wash vessel (PWD-VSL-00044).

	Information Assessed	Source of Information	Assessment
Corrosion Protection	Vessel material and protective coatings ensure the vessel structure is adequately protected from the corrosive effects of the waste stream and external environments (expected to not leak or fail for the design life of the system)	Drawings and Mechanical Data Sheet listed above under References; Plant Item Material Selection Data Sheet, 24590-PTF-N1D-PJV-P0001, Rev. 0, PJV-VSL-00002 (PTF) PJV Drain Collection Vessel; 24590-PTF-3YD-PJV-00001, Rev. C, System Description for PTF Pulse Jet Ventilation System (PJV) – (including SDCNs 24590-PTF-3YN-PJV-00002 and – 00003).	The Plant Item Material Selection Data Sheet shows that the PJV Drain Collection Vessel, PJV-VSL-00002 normally operates at atmospheric pressure, pH 9-10, and at 113°F temperature. The vessel is designed for 15 psig pressure and 200°F temperature. The material selected is 304 stainless steel and a corrosion allowance of 0.04 in. This vessel is located in cell (P-0102) at Elevation 0'-0". The cell is equipped with a sump to pump out any leaks. Therefore, the cell should remain dry during normal operation, which will limit external corrosion of the vessel over the facility design life.
Corrosion Allowance	Corrosion allowance is adequate for the intended service life of the vessel.	Mechanical Data Sheet listed above under References; Plant Item Material Selection Data Sheet, 24590-PTF-N1D-PJV-P0001, Rev. 0, PJV-VSL-00002 (PTF) PJV Drain Collection Vessel.	The bases for the PJV vessel's material selection and corrosion allowance are furnished in the Plant Item Material Selection Data Sheet. Selection of 304 stainless steel material with a corrosion allowance of 0.04 in. for a service life of 40 years is adequate and appropriate. The material selection and corrosion allowance are carried forward to the Mechanical Data Sheet.
Pressure Relief	Pressure controls (vents and relief valves) are adequately designed to ensure pressure relief if normal operating pressures in the vessel are exceeded.	Drawings listed above under References; 24590-PTF-3YD-PJV-00001, Rev. C, System Description for PTF Pulse Jet Ventilation System (PJV) – (including SDCNs 24590-PTF-3YN-PJV-00002 and – 00003).	The PJV Drain Collection Vessel, PJV-VSL-00002, is designed to overflow into the ultimate overflow vessel (PWD-VSL-00033) through a 6" diameter unrestricted line. Vessel (PWD-VSL-00033) is located in the PTF at Elevation (-) 45'-0", as shown on the drawings and described in the System Description document. This PJV vessel is also connected to the PTF PJV vessel vent system to prevent over pressurization of the vessel.

24590-CM-HC4-HXYG-00138	- 02 - 00047	00A
PO/SCT	**Submittal**	**Rev**

Job No. 24590

Bechtel National, Inc.

SUPPLIER DOCUMENT STATUS

1. ☒ **Work may proceed.**
2. ☐ **Revise and resubmit. Work may proceed subject to resolution of indicated comments.**
3. ☐ **Revise and resubmit. Work may not proceed.**
4. ☐ **Review not required. Work may proceed.**

Permission to proceed does not constitute acceptance or approval of design details, calculations, analyses, test methods, or materials developed or selected by the supplier and does not relieve supplier from full compliance with contractual obligations.

REVIEWED										

G-321 Document Category N/A
[From Supplement A to G-321-E (E) or G-321-V (V), as applicable, or "N/A" if SSRS is used]

Supersedes BNI Document No. N/A Rev. _____
[When applicable]

Accepted by DC Pfinger [signature] 7/29/04
Print Name Signature Date

Released by N/A
[When applicable] Print Name Signature Date

TP0406_34 7-04

SUBCONTRACT SUBMITTAL

Best Available Copy

R10384059

IQRPE REVIEW
OF
PRETREATMENT FACILITY (PTF), ELEVATION 0'-0" PULSE JET VENTILATION SYSTEM (PJV) ANCILLARY EQUIPMENT

"I, Tarlok Hundal, have reviewed, and certified a portion of the design of a new tank system or component located at the Hanford Waste Treatment Plant, owned/operated by Department of Energy, Office of River Protection, Richland, Washington. My duties were independent review of the current design for the Pretreatment Facility (PTF), Elevation 0'0" Pulse Jet Ventilation System (PJV) Ancillary Equipment, as required by the Dangerous Waste Regulations, namely, WAC 173-303-640(3) (applicable paragraphs (i.e., (a) through (g)."

"I certify under penalty of law that I have personally examined and am familiar with the information submitted in this document and all attachments and that, based on my inquiry of those individuals immediately responsible for obtaining the information, I believe that the information is true, accurate, and complete. I am aware that there are significant penalties for submitting false information, including the possibility of fine and imprisonment."

The documentation reviewed indicates that the design intent fully satisfies the requirements of the WAC.

The attached review is seven pages numbered 1 through 7.

TARLOK SINGH HUNDAL
STATE OF WASHINGTON
20213
REGISTERED
PROFESSIONAL ENGINEER

EXPIRES: 02/15/06

Signature

9/27/04
Date

24590-CM-HC4-HXYG-00138-02-00047 REV.00A

STRUCTURAL INTEGRITY ASSESSMENT OF THE PRETREATMENT FACILITY (PTF), ELEVATION 0'-0" PULSE JET VENTILATION SYSTEM (PJV) ANCILLARY EQUIPMENT

COGEMA-IA-072

REV. 0

Please note that source, special nuclear and byproduct materials, as defined in the Atomic Energy Act of 1954 (AEA), are regulated at the U.S. Department of Energy (DOE) facilities exclusively by DOE acting pursuant to its AEA authority. DOE asserts, that pursuant to the AEA, it has sole and exclusive responsibility and authority to regulate source, special nuclear, and byproduct materials at DOE-owned nuclear facilities. Information contained herein on radionuclides is provided for process description purposes only.

Scope	Scope of this Integrity Assessment	This Integrity Assessment addresses the ancillary equipment (piping and pipe supports) for the Pretreatment Facility Pulse Jet Ventilation (PJV) System as shown on Drawings 24590-PTF-M6-PJV-P0001 and -P0004. This ancillary equipment is associated with the exhaust air, fluidic air, and/or effluent air from or to the following components: pulse jet mixers and reverse flow diverters from various vessels, process air from the process air racks, plant wash racks and the header flush lines, vent flush lines, header drain lines to vessels, demisters, effluent collection header flushes drains, vent headers, bulges drain header, and HEPA filters etc., as shown on the P&ID Drawings and as described in the System Description listed in the References below. Ancillary equipment located inside the associated vessels is addressed separately in the Integrity Assessments for those vessels.
References	Drawings and System Description	Drawings: 24590-PTF-P1-P01T-P0001, Rev. 4, Pretreatment Facility General Arrangement Plan at El. 0'-0"; 24590-PTF-M6-PJV-P0001, Rev. 0, P&ID – PTF Pulse Jet Ventilation System Air Racks to Demisters; 24590-PTF-M6-PJV-P0002, Rev. 0, P&ID – PTF Pulse Jet Ventilation System Inlet Header to Demister Outlet; 24590-PTF-M6-PJV-P0004, Rev. 0, P&ID – PTF Pulse Jet Ventilation System Utility Services-Plant Wash Rack; 24590-PTF-M5-V17T-P0021002, Rev. 0, Process Flow Diagram Pretreatment RFD/PJM Exhaust (PJV) Systems PVP/PVV/PJV. System Description: 24590-PTF-3YD-PJV-00001, Rev. C, System Description for Pulse Jet Ventilation System (PJV).
Summary of Assessment		For each item of "Information Assessed" (i.e., Criteria) on the following pages, the items listed under "Source of Information" were reviewed and found to furnish adequate design controls and requirements to ensure the design intent fully satisfies the requirements of Washington Administrative Code, WAC-173-303-640, *Dangerous Waste Regulations* for Tank Systems.

	Information Assessed	Source of Information	Discussion
Design	Ancillary equipment design standards are appropriate and adequate for the equipment's intended use.	Drawings and System Description listed above under References; 24590-WTP-DC-PS-01-001, Rev. 3, Pipe Stress Design Criteria Including "Pipe Stress Criteria" and "Span Method Criteria"; ASME B31.3 Code, Process Piping, 1996 Edition, American Society of Mechanical Engineers; 24590-WTP-PSAR-ESH-01-002-02, Rev. 1a, Preliminary Safety Analysis Report (PSAR) to Support Construction Authorization: PT Facility Specific Information.	The Pipe Stress Design Criteria specifies ASME B31.3 as the design code for piping systems of the WTP. The P&ID drawings and System Description document show the ancillary equipment piping and components as Seismic Category (I and III) and Quality Level (QL-1 and Commercial Grade material). The Pipe Stress Design Criteria document provides a detailed discussion of seismic categories. Quality Levels are discussed in the PSAR. These codes and standards are acceptable and adequate for the design of the ancillary equipment piping and components for their intended service.
	If the ancillary equipment to be used is not built to a design standard, the design calculations demonstrate sound engineering principles of construction.	ASME B31.3 Code, Process Piping, 1996 Edition, American Society of Mechanical Engineers; 24590-WTP-DC-PS-01-001, Rev. 3, Pipe Stress Design Criteria Including "Pipe Stress Criteria" and "Span Method Criteria."	The ancillary equipment is to be built to the design standards. The Pipe Stress Design Criteria specifies that piping is to be designed in accordance with ASME B31.3 Code.

	Information Assessed	Source of Information	Discussion
Design	Ancillary equipment has adequate strength at the end of its design life to withstand the operating pressure, operating temperature, thermal expansion, and seismic loads. Equipment is protected against physical damage and excessive stress due to settlement, vibration, expansion, or contraction.	24590-WTP-DC-PS-01-001, Rev. 3, Pipe Stress Design Criteria Including "Pipe Stress Criteria" and "Span Method Criteria"; 24590-WTP-PER-M-02-002, Rev. 1, Materials for Ancillary Equipment; DOE-STD-1020-94, Natural Phenomenon Hazards Design Evaluation Criteria for Department of Energy Facilities (including Change Notice #1, January 1996); ASME BPV Code, Section III, Code Case N-411, Subsection NC, Appendix N, and Appendix F; UBC, Uniform Building Code, 1997 Edition.	The Pipe Stress Design Criteria requires the use of the ASME B31.3 Code and DOE-STD-1020-94 Standard, for piping design. ASME B31.3 requires explicit consideration of operating pressure, operating temperature, thermal expansion/contraction, settlement, vibration, and corrosion allowance in the design of piping. ASME BPV Code, Section III, Code Case N-411, Subsection NC, Appendix N, and Appendix F, and the Uniform Building Code (UBC) are used to supplement the requirements of ASME B31.3 and DOE-STD-1020-94 for design as applicable to the appropriate Seismic Category of the ancillary equipment. Details of the seismic design methods are discussed in the Pipe Stress Design Criteria document. These are appropriate and adequate codes and standards to ensure that the ancillary equipment has adequate strength at the end of its design life to withstand all anticipated loads.

	Information Assessed	Source of Information	Discussion
Supports	Ancillary equipment supports are adequately designed.	24590-WTP-DC-PS-01-002, Rev. 3, Pipe Support Design Criteria; ASME Boiler and Pressure Vessel Code, Section III, Division 1, Rules for Construction of Nuclear Power Plant Components, 1995; 24590-WTP-PER-PS-02-001, Rev. 4, Ancillary Equipment Pipe Support Design; 24590-WTP-PL-PS-01-001, Rev. 1, Verification and Validation Test Plan for Bechtel's ME150 Pipe Support Family of Programs (PCFAPPS).	The Pipe Support Design Criteria document considers all loadings and loading combinations identified in ASME B31.3.and utilizes ASME BPV Code, Section III, Division 1, Subsection NF and Appendix F, to supplement the requirements of ASME B31.3 for seismic design of the applicable Seismic Category of the pipe supports. Bounding load cases are passed to the pipe support designers from the results of the ancillary equipment piping stress analyses. Details of the seismic design methodology are discussed in the Pipe Support Design Criteria document. Examples of typical ancillary equipment supports are shown in the Ancillary Equipment Pipe Support Design document. Analysis is by manual calculation or approved computer programs that have been verified and validated. These are appropriate codes and standards for design of ancillary equipment supports for the PJV system. Ancillary equipment supports are to be designed in such a way that the heat transferred from supports to the building structure does not raise the building structure temperature to exceed 150°F for concrete and 200°F for steel.
Frost Heave	The system will withstand the effects of frost heave.	Drawings and System Description listed above under References; 24590-WTP-DC-ST-01-001, Rev. 3, Structural Design Criteria.	The PJV system ancillary equipment considered in this assessment is located inside the process cells as shown on the P&ID drawings. The Structural Design Criteria requires that all structural foundations shall extend into the surrounding soil below the 30 in. frost line to preclude frost heave. The PT facility's grade level concrete structural foundation mat is 8 ft thick and embedded into the soil, therefore, the ancillary equipment is not subject to the effects of frost heave.

	Information Assessed	Source of Information	Discussion
Connections	Seams and connections are adequately designed.	24590-WTP-DC-PS-01-001, Rev. 3, Pipe Stress Design Criteria Including "Pipe Stress Criteria" and "Span Method Criteria"; ASME BPV Code, Section IX, Welding and Brazing Qualifications; ASME B16.5, Piping Flanges and Flanged Fittings.	The Pipe Stress Design Criteria specifies the ASME B31.3 Process Piping design code for the piping systems. Welding is to be performed in accordance with the requirements of ASME B31.3 and the ASME BPV Code, Section IX. ASME B16.5 Code is specified for flange designs. These are appropriate codes and standards for the design and fabrication of the PJV System ancillary equipment.
Waste Characteristics	Characteristics of the waste to be stored or treated have been identified (ignitable, reactive, toxic, specific gravity, vapor pressure, flash point, temperature)	System Description listed above under References; 24590-WTP-PSAR-ESH-01-002-02, Rev. 1a, Preliminary Safety Analysis Report to Support Construction Authorization: PT Facility Specific Information; Department of Ecology Permit # WA7890008967, *Dangerous Waste Portion of the Hanford Facility Resource Conservation and Recovery Act Permit for the Treatment, Storage, and Disposal of Dangerous Waste,* Chapter 10, and Attachment 51, "Hanford Tank Waste Treatment and Immobilization Plant."	The ancillary equipment associated with the PJV system serves to handle exhausts from pulse jet mixers and reverse flow diverters from various plant vessels. This system removes mists from the exhaust streams by demisters, followed by two stage HEPA filters to remove radiolytic particulates from the effluent stream prior to its release out of the PJV designated exhaust stack. The ancillary equipment considered in this assessment will handle wastes with the same characteristics as do the source vessels. The waste characteristics of source vessels have been appropriately assessed in separate integrity assessments for the associated vessels. The Preliminary Safety Analysis Report (PSAR) and Part A of the Permit, provide a summary of potential hazardous conditions associated with each Pretreatment Facility vessel and the design provisions that are to be used to provide adequate control of each hazard.
	Ancillary equipment is designed to handle the wastes with the characteristics defined above and any treatment reagents.	24590-WTP-PER-M-02-002, Rev 1, Materials for Ancillary Equipment.	The Materials for Ancillary Equipment document specifies that ancillary equipment materials that contact the waste are to be equal to or better than those of the upstream source vessels.

	Information Assessed	Source of Information	Discussion
Compatibility	The pH range of the waste, waste temperature and the corrosion behavior of the structural materials are adequately addressed. Ancillary equipment material and protective coatings ensure the ancillary equipment structure is adequately protected from the corrosive effects of the waste stream and external environments. The protection is sufficient to ensure the equipment will not leak or fail for the design life of the system.	24590-WTP-DB-ENG-01-001, Rev. 1B, Basis of Design; 24590-WTP-PER-M-02-002, Rev. 1, Materials for Ancillary Equipment; 24590-WTP-3PS-NN00-T0001, Rev. 0, Engineering Specification for Hot and Anti-Sweat Thermal Insulation.	The Basis of Design document identifies a service design life of 40 years for the ancillary equipment. Detailed materials selection (corrosion) evaluations are conducted for each vessel in the PTF facility during process design to ensure a 40 year service life. The Materials for Ancillary Equipment document requires that the material selection and corrosion/erosion allowances for ancillary equipment in contact with the waste will be equal to or better than the material and corrosion allowance of the waste source vessel. The Thermal Insulation specification requires that all insulating materials used on the outside of ancillary equipment be pre-approved for use on austenitic stainless steel in accordance with applicable ASTM procedures and tests to preclude external corrosion of ancillary equipment. Therefore, the ancillary equipment will provide the expected design service life.
Corrosion Allowance	Corrosion allowance is adequate for the intended service life of the ancillary equipment.	24590-WTP-PER-M-02-002, Rev. 1, Materials for Ancillary Equipment; 24590-WTP-DC-PS-01-001, Rev. 3, Pipe Stress Design Criteria Including "Pipe Stress Criteria" and "Span Method Criteria"; 24590-WTP-PER-PL-02-001, Rev. 5, Piping Material Class Description;	The Pipe Stress Design Criteria specifies ASME B31.3 as the design code for the WTP piping. Consideration of corrosion, including corrosion allowance, is a mandatory requirement of ASME B31.3. A required service life of 40 years is identified in the Basis of Design document for ancillary equipment. Detailed materials selection (corrosion) evaluations are conducted for each vessel in the PTF facility during process design to ensure a 40 year service life. The Materials for Ancillary Equipment document requires that the downstream ancillary equipment is to be constructed of equal or better materials, and with the same corrosion allowance as the source vessel. Corrosion/Erosion allowances are listed for each Piping Material Class in the Piping Material Class Description document.

	Information Assessed	Source of Information	Discussion
Strength	Pressure controls (vents and relief valves) are adequately designed to ensure pressure relief if normal operating pressures in the vessels are exceeded.	24590-WTP-DC-PS-01-001, Rev. 3, Pipe Stress Design Criteria Including "Pipe Stress Criteria" and "Span Method Criteria."	The Pipe Stress Design Criteria document specifies ASME B31.3 as the design code for the WTP piping. ASME B31.3 requires provisions be made to safely contain or relieve any pressure to which the piping may be subjected. ASME B31.3 piping not protected by a pressure relieving device, or that can be isolated from a pressure reliving device must be designed for at least the highest pressure that can be developed.
	Maximum flows and any unusual operating stresses are identified	Drawings listed above under References; 24590-WTP-DC-PS-01-001, Rev. 3, Pipe Stress Design Criteria Including "Pipe Stress Criteria" and "Span Method Criteria"; 24590-WTP-PER-PL-02-001, Rev. 3, Piping Material Class Description.	The expected flow paths for the ancillary equipment are identified on the P&ID drawings. The Pipe Stress Design Criteria specifies ASME B31.3 Code for piping design. This code requires piping to be designed to the highest pressure that can be developed in a piping system ensuring that maximum operating stresses remain within code allowables. Piping material classes are shown on the P&IDs embedded in the item numbers for each ancillary equipment component. The Piping Material Class Description document lists the bounding pressure and temperature limits for each piping material class.
Secondary Containment	Ancillary equipment is designed with secondary containment that is constructed of materials compatible with the waste and of sufficient strength to prevent failure (pressure gradients, waste, climatic conditions, daily operations), provided with a leak-detection system, and designed to drain and remove liquids.	Drawings and System Description listed above under References; 24590-WTP-PER-CSA-02-001, Rev. 4, Secondary Containment Design; 24590-WTP-DB-ENG-01-001, Rev. 1B, Basis of Design.	The Basis of Design document states that ancillary equipment shall be provided with a secondary containment. The ancillary equipment considered in this assessment is located in process cell areas within the PTF. These PTF room/cell areas are secondary containment concrete structures including sumps as shown on the general arrangement drawings. The cells and sumps are lined with stainless steel plates or other suitable liner materials as detailed in the Secondary Containment Design document. The secondary containment structures are outside the scope of this integrity assessment and their assessment is conducted in a separate document. Each cell sump is equipped with a leak detection device and a liquid removal device such as steam ejector or electrical pump.

STRUCTURAL INTEGRITY ASSESSMENT OF THE PRETREATMENT FACILITY (PTF) VESSEL VENT PROCESS SYSTEM (PVP) VESSEL PVP-VSL-00001, HEME DRAIN COLLECTION VESSEL, AND MTU PVP-SCB-00002, VESSEL VENT CAUSTIC SCRUBBER

Job No. 24590

Bechtel National, Inc.

SUPPLIER DOCUMENT STATUS

1. [X] **Work may proceed.**
2. [ ] **Revise and resubmit. Work may proceed subject to resolution of indicated comments.**
3. [ ] **Revise and resubmit. Work may not proceed.**
4. [ ] **Review not required. Work may proceed.**

Permission to proceed does not constitute acceptance or approval of design details, calculations, analyses, test methods, or materials developed or selected by the supplier and does not relieve supplier from full compliance with contractual obligations.

REVIEWED									
							ENS		
							DM		

G-321 Document Category N/A
[From Supplement A to G-321-E (E) or G-321-V (V), as applicable, or "N/A" if SSRS is used]

Supersedes BNI Document No. N/A Rev. _____
[When applicable]

Accepted by DC Pfinger (Print Name) DC Pfinger (Signature) 11/18/04 (Date)

Released by N/A (Print Name) _____ (Signature) _____ (Date)
[When applicable]

416 GP&S 7-03

Please note that source, special nuclear and byproduct materials, as defined in the Atomic Energy Act of 1954 (AEA), are regulated at the U.S. Department of Energy (DOE) facilities exclusively by DOE acting pursuant to its AEA authority. DOE asserts, that pursuant to the AEA, it has sole and exclusive responsibility and authority to regulate source, special nuclear, and byproduct materials at DOE-owned nuclear facilities. Information contained herein on radionuclides is provided for process description purposes only.

24590-CM-HC4-HXYB-00138-02-00051, REV. 00A

R10437431

IQRPE REVIEW
OF
THE PRETREATMENT FACILITY (PTF) VESSEL VENT PROCESS SYSTEM (PVP) VESSEL PVP-VSL-00001, HEME DRAIN COLLECTION VESSEL, AND MTU PVP-SCB-00002, VESSEL VENT CAUSTIC SCRUBBER

"I, Jean Dempster, have reviewed and certified a portion of the design of a new tank system or component located at the Hanford Waste Treatment Plant, owned/operated by Department of Energy, Office of River Protection, Richland, Washington. My duties were independent review of the current design for the Pretreatment Facility (PTF) Vessel Vent Process System (PVP) Vessel PVP-VSL-00001, HEME Drain Collection Vessel, and MTU PVP-SCB-00002, Vessel Vent Caustic Scrubber, as required by the Washington Administrative Code, *Dangerous Waste Regulations,* Section WAC 173-303-640(3) (a) through (g) applicable components."

"I certify under penalty of law that I have personally examined and am familiar with the information submitted in this document and all attachments and that, based on my inquiry of those individuals immediately responsible for obtaining the information, I believe that the information is true, accurate, and complete. I am aware that there are significant penalties for submitting false information, including the possibility of fine and imprisonment."

The documentation reviewed indicates that the design intent fully satisfies the requirements of the WAC.

The attached review is eleven (11) pages numbered one (1) through eleven (11).

JEAN DEMPSTER
STATE OF WASHINGTON
40313
REGISTERED
PROFESSIONAL ENGINEER

EXPIRES: 7-30-2006

Signature

11/18/2004
Date

RPP-WTP
RECEIVED
NOV 18 2004
BY PDC

Scope	Scope of this Integrity Assessment	The scope of this integrity assessment includes the Pretreatment Facility (PTF) HEME Drain Collection Vessel (PVP-VSL-00001) and the PTF Vessel Vent Caustic Scrubber (PVP-SCB-00002). The primary function of the HEME Drain Collection Vessel is to receive washings from the HEMEs via a drain seal leg. Periodically the accumulated drains and washings are transferred to the Plant Wash Vessel, PWD-VSL-00044 in the PWD system. The Caustic Scrubber provides confinement of the exhaust gases, absorbs soluble NO_x/acid gases and removes large solid particulates from the PTF vessel vent exhaust gases.
References	Drawings and Material Requisitions	24590-PTF-P1-P01T-P0001, Rev. 3, Pretreatment Facility General Arrangement Plan at EL. 0'-0" 24590-PTF-M5-V17T-P0021001, Rev. 0, Process Flow Diagram – Pretreatment Vessel Vents Process (PVP/PVV) Systems PVP/PVV/PJV 24590-PTF-M6-PVP-P0018, Rev. 0, P&ID – PTF Pretreatment Vessel Vent Process System (PVP) HEMEs to VOC Oxidation Unit 24590-PTF-M6-PVP-P0017, Rev. 0, P&ID – PTF Pretreatment Vessel Vent Process System (PVP) Caustic Scrubber to HEMEs 24590-PTF-MV-PVP-P0002, Rev. 0, Equipment Assembly Drawing – HEME Drain Collection Vessel PVP-VSL-00001 24590-QL-MRF-MVA0-00003, Rev. 1, Pressure Vessels, Shop Fabricated, Small MR Section 2 – Technical Specifications 24590-QL-MRA-MKAS-00002, Rev. 1, PTF Vessel Vent Caustic Scrubber MR Section 2 – Technical Specifications
References	Mechanical Data Sheets, Plant Item Material Selection Data Sheets and System Description	Mechanical Data Sheet: Vessel, 24590-PTF-MVD-PVP-00001, Rev. 1, HEME Drain Collection Vessel Plant Item Number 24590-PTF-MV-PVP-VSL-00001 Mechanical Data Sheet: Vessel, 24590-PTF-MKD-PVP-00002, Rev. 4, Vessel Vent Caustic Scrubber Plant Item Number 24590-PTF-MK-PVP-SCB-00002 Plant Item Material Selection Data Sheet, 24590-PTF-N1D-PVP-P0002, Rev. 0, HEME Drain Collection Vessel PVP-VSL-00001 (PTF) Plant Item Material Selection Data Sheet, 24590-PTF-N1D-PVP-P0001, Rev. 0, Vessel Vent Caustic Scrubber PVP-SCB-00002 (PTF) 24590-PTF-3YD-PVP-00001, Rev. 0, System Description for Pretreatment Vessel Vent Process System, PVP System Description Change Notice (SDCN) No. 24590-PTF-3YN-PVP-00001 for System Description Number 24590-PTF-3YD-PVP-00001, Rev. 0
Summary of Assessment		For each item of "Information Assessed" (i.e., Criteria) on the following pages, the items listed under "Source of Information" were reviewed and found to furnish adequate design controls and requirements to assure the design intent fully satisfies the WAC requirements.

	Information Assessed	Source of Information	Discussion
Design	Vessel design standards are appropriate and adequate for the vessel's intended use.	Material Requisition and Mechanical Data Sheet listed above under References 24590-WTP-3PS-MV00-T0001, Rev. 1, Engineering Specification for Pressure Vessel Design and Fabrication SCN No. 24590-WTP-3PN-MV00-00006 for Spec. No. 24590-WTP-3PS-MV00-T0001, Rev. 1 ASME Boiler and Pressure Vessel Code (B&PV), Section VIII, Division 1, Rules for Construction of Pressure Vessels, American Society of Mechanical Engineers 24590-WTP-3PS-SS90-T0001, Rev 0, Engineering Specification for Seismic Qualification of Seismic Category I/II Equipment and Tanks	Material Requisition 24590-QL-MRF-MVA0-00003 lists specifications required for the design and fabrication of PVP-VSL-00001, the HEME Drain Collection Vessel, including 24590-WTP-3PS-MV00-T0001, Engineering Specification for Pressure Vessel Design and Fabrication. This specification requires that the vessel be designed and fabricated in accordance with ASME B&PV Code, Section VIII, Division 1. The Mechanical Data Sheet identifies vessel PVP-VSL-00001 as Quality Level QL-2 and Seismic Category SC-II equipment Design requirements for QL-2 pressure vessels are described in 24590-WTP-3PS-MV00-T0001. Seismic qualification requirements are contained in 24590-WTP-3PS-SS90-T0001, Rev 0, Engineering Specification for Seismic Qualification of Seismic Category I/II Equipment and Tanks. Additional requirements included in the specification for Pressure Vessel Design and Fabrication are: • positive material identification • standard fabrication tolerances • acceptable welding procedures for the vessel and appurtenances • welder qualifications and testing records • NDE inspections and records • quality assurance requirements • packaging, shipping, handling, and storage requirements. These are appropriate and adequate codes and standards for design and fabrication of the subject vessel.

	Information Assessed	Source of Information	Discussion
	If a non-standard vessel is to be used, the design calculations demonstrate sound engineering principles of construction.	Material Requisition and Mechanical Data Sheet listed above under References 24590-WTP-3PS-MV00-T0001, Rev. 1, Engineering Specification for Pressure Vessel Design and Fabrication; SCN No. 24590-WTP-3PN-MV00-00006 for Spec. No. 24590-WTP-3PS-MV00-T0001, Rev. 1	The Engineering Specification for Pressure Vessel Design and Fabrication requires that WTP vessels shall be designed and fabricated in accordance with ASME Section VIII, Div. 1 Material Requisition 24590-QL-MRF-MVA0-00003, Rev. 1 imposes this specification for the design and fabrication of PVP-VSL-00001. The Mechanical Data Sheet requires a code stamp and National Board Registration. Therefore, this is a standard vessel and the referenced codes and standards are adequate and acceptable for design and fabrication.
Design	Vessel has adequate strength, after consideration of the corrosion allowance, to withstand the operating pressure, operating temperature, and seismic loads.	Mechanical Data Sheet and Plant Item Material Selection Data Sheet listed above under References 24590-WTP-3PS-MV00-T0001, Rev. 1, Engineering Specification for Pressure Vessel Design and Fabrication SCN No. 24590-WTP-3PN-MV00-00006 for Spec. No. 24590-WTP-3PS-MV00-T0001, Rev. 1 24590-WTP-3PS-SS90-T0001, Rev. 0, Engineering Specification for Seismic Qualification of Seismic Category I/II Equipment and Tanks 24590-WTP-3PS-MV00-T0002, Rev. 2, Engineering Specification for Seismic Qualification Criteria for Pressure Vessels	The Engineering Specification for Pressure Vessel Design and Fabrication requires that WTP vessels, which includes PVP-VSL-00001, are to be designed and fabricated in accordance with ASME B&PV Code, Section VIII, Division 1. This code requires specific consideration of operating pressures, temperatures, seismic loads, and corrosion allowances in the design process. The Mechanical Data Sheet identifies the operating pressure and temperature ranges for the subject vessel, the materials and the corrosion allowance as identified in the Plant Item Material Selection Data Sheet, and references 24590-WTP-3PS-SS90-T0001 and 24590-WTP-3PS-MV00-T0002 for seismic design requirements. The Mechanical Data Sheet indicates that vessel PVP-VSL-00001 is seismic category SC-II. The Engineering Specification for Seismic Qualification of Seismic Category I/II Equipment and Tanks provides detailed guidance for the required seismic analyses. These are appropriate codes and standards to ensure the vessel has adequate strength to withstand expected operating pressure, operating temperature, and seismic loads.
Foundation	Vessel foundation will maintain the load of a full vessel.	Equipment Assembly Drawing and Mechanical Data Sheet listed above under References Engineering Specification for Pressure Vessel Design and Fabrication; SCN No. 24590-WTP-3PN-MV00-00006 for Spec. No. 24590-WTP-3PS-MV00-T0001, Rev. 1	The Equipment Assembly drawing shows the support arrangements for vessel PVP-VSL-00001. The support consists of a cylindrical skirt with a base ring beam to provide for bearing on concrete or support rings and anchorage. The Engineering Specification for Pressure Vessel Design and Fabrication requires vessel supports as illustrated on the referenced drawing. The drawing indicates it is to be read in conjunction with the Mechanical Data Sheet which provides the estimated weight of the full vessel.

	Information Assessed	Source of Information	Discussion
	If in an area subject to flooding, the vessel is anchored.	General Arrangement Drawing and Equipment Assembly Drawing listed above under References 24590-PTF-PER-M-02-005, Rev. 8, Flooding Volume for Below Grade and 0 Ft. Level in PT Facility	The HEME Drain Collection Vessel is located in a PT facility black cell at the 0'0" elevation. Per 24590-PTF-PER-M-02-005, the maximum fluid elevation in these cells is approximately 24.7 in. Vessel PVP-VSL-00001 is elevated by its support structure to 8'8 ½". Therefore, flooding is not a consideration for this vessel.
Frost Heave	Vessel system will withstand the effects of frost heave.	PTF General Arrangement Drawing listed above under References 24590-WTP-DC-ST-01-001, Rev. 3, Structural Design Criteria	As shown on the PTF General Arrangement Plan, 24590-PTF-P1-P01T-P0001, the HEME Drain Collection Vessel, PVP-VSL-00001, is installed at elevation 0'-0"in an inaccessible process cell. These cells are supported by the PTF mat foundation. The Structural Design Criteria requires that all structural foundations extend into the surrounding soil below the frost line in order to preclude frost heave. The frost line is located 30 in. below finished grade. The PTF mat foundation is not subject to frost heave and, therefore, the HEME Drain Collection Vessel, which is supported by the PTF mat foundation, will not be subject to frost heave.
Waste Characteristics	Characteristics of the waste to be stored or treated have been identified (ignitable, reactive, toxic, specific gravity, vapor pressure, flash point, storage temperature)	System Description, Mechanical Data Sheet, Plant Items Material Selection Data Sheet and listed above under References 24590-WTP-PER-PR-03-002, Rev. 1, Toxic Vapors and Emissions from WTP Tank Systems and Miscellaneous Treatment Unit System; 24590-WTP-PER-PR-03-001, Rev. 1, Prevention of Hydrogen Accumulation in WTP Tank Systems and Miscellaneous Treatment Unit Systems	Per the referenced System Description, the function of vessel PVP-VSL-00001 is to provide confinement, collection, and storage of drains from PVP-HEME-00001A/B/C. Report 24590-WTP-PER-PR-03-002 discusses control of toxic vapors and emissions from WTP tank systems and MTUs and identifies control equipment. Report 24590-WTP-PER-PR-03-001 identifies PT vessels which provide primary containment of wastes that pose a hydrogen accumulation hazard. The HEME Drain Collection Vessel is not included in either of these discussions. The contents of the HEME Drain Collection Vessel are identified on the Plant Items Material Selection Data Sheet as generally neutral with the possibility of acidic conditions due to acid wash of the HEME elements. The Mechanical Data Sheet provides the temperature, pressure, and specific gravity of the contained liquid. The referenced documents identify all characteristics of the waste that impact vessel design.

	Information Assessed	Source of Information	Discussion
	Vessel is designed to store or treat the wastes with the characteristics defined above and any treatment reagents.	Plant Item Material Selection Data Sheet and System Description listed above under References	The Plant Item Material Selection Data Sheet documents the material selection for the HEME Drain Collection based upon the chemistry, pH, and temperature of the collected waste and the operating environment of the vessel. Additional reagents are not added to this vessel during normal operations. The Material Data Sheet lists 304 stainless steel (maximum 0.030% Carbon, dual certified), hereinafter referred to as 304L stainless steel, as the material selected for vessel PVP-VSL-00001.
Compatibility	The waste types are compatible with each other.	System Description listed above under References	The HEME Drain Collection Vessel receives a single waste stream, the PVP HEME Drains. Therefore, there are no waste type compatibility considerations.
	Vessel material and protective coatings ensure the vessel structure is adequately protected from the corrosive effects of the waste stream and external environments (expected to not leak or fail for the design life of the system)	Plant Item Material Selection Data Sheet, Mechanical Data Sheets, and System Description listed above under References 24590-WTP-DB-ENG-01-001, Rev. 1b, Basis of Design.	The material selection process included internal corrosion considerations relevant to the operating conditions of the HEME Drain Collection Vessel. Based upon those considerations, the material chosen was 304L stainless steel as documented on the Plant Item Material Selection Data Sheet. This selection was based upon a design life of 40 years per 24590-WTP-DB-ENG-01-001, Basis of Design. This material selection is listed on the Mechanical Data Sheet under materials of construction. The HEME Drain Collection Vessel is located inside a WTP black cell. These cells normally operate in dry conditions with active ventilation, therefore, external corrosion is not considered to be an issue. Therefore, the materials selected are adequate to provide the required 40 year service life for these vessels.
Corrosion Allowance	Corrosion allowance is adequate for the intended service life of the vessel.	Plant Item Material Selection Data Sheet and System Description listed above under References 24590-WTP-DB-ENG-01-001, Rev. 1b, Basis of Design.	The Plant Item Material Selection Data Sheet indicates a recommended corrosion allowance of 0.04 inch. This recommendation is based upon corrosion rates of 304L stainless steel and a design life of 40 years per the WTP Basis of Design. The material selection and recommended corrosion allowance are adequate for the service life for the vessel.

	Information Assessed	Source of Information	Discussion
Pressure Controls	Pressure controls (vents and relief valves) are adequately designed to ensure pressure relief if normal operating pressures in the vessel are exceeded.	P&ID and System Description listed above under References	Normal operation of the HEME Drain Collection Vessel is transfer of collected liquid twice a week or on high level indication to PWD-VSL-00044. The vessel is instrumented with a level monitor and control to start the transfer of fluid at the high set point. The vessel also has an overflow line to vessel PWD-VSL-00033, the PWD plant overflow vessel. Additionally, the HEME Drain Collection vessel is vented to the HEME inlet line. This configuration is considered adequate to ensure relief if normal operating pressure is exceeded.

	Information Assessed	Source of Information	
Design	Vessel design standards are appropriate and adequate for the vessel's intended use.	Material Requisition and Mechanical Data Sheet listed above under References 24590-WTP-3PS-MV00-T0001, Rev. 1, Engineering Specification for Pressure Vessel Design and Fabrication SCN No. 24590-WTP-3PN-MV00-00006 for Spec. No. 24590-WTP-3PS-MV00-T0001, Rev. 1 ASME Boiler and Pressure Vessel Code (B&PV), Section VIII, Division 1, Rules for Construction of Pressure Vessels, American Society of Mechanical Engineers 24590-WTP-3PS-FB01-T0001, Rev 1, Structural Design Loads for Seismic Category III and IV Equipment and Tanks	Material Requisition 24590-QL-MRA-MKAS-00002 lists specifications required for the design and fabrication of PVP-SCB-00002, including 24590-WTP-3PS-MV00-T0001, Engineering Specification for Pressure Vessel Design and Fabrication. This specification requires that design and fabrication be in accordance with ASME B&PV Code, Section VIII, Division 1. The Mechanical Data Sheet identifies Scrubber PVP-SCB-00002 as Quality Level QL-2 and Seismic Category SC-III equipment. Design requirements for QL-2 pressure vessels are described in 24590-WTP-3PS-MV00-T0001. Seismic load requirements are contained in 24590-WTP-3PS-FB01-T0001, Rev 1, Structural Design Loads for Seismic Category III and IV Equipment and Tanks. Additional requirements included in the specification for Pressure Vessel Design and Fabrication are: • positive material identification • standard fabrication tolerances • acceptable welding procedures for the vessel and appurtenances • welder qualifications and testing records • NDE inspections and records • quality assurance requirements • packaging, shipping, handling and storage requirements. These are appropriate and adequate codes and standards for design and fabrication of the subject equipment.
	If a non-standard vessel is to be used, the design calculations demonstrate sound engineering principles of construction	Material Requisition listed above under References 24590-WTP-3PS-MV00-T0001, Rev. 1, Engineering Specification for Pressure Vessel Design and Fabrication; SCN No. 24590-WTP-3PN-MV00-00006 for Spec. No. 24590-WTP-3PS-MV00-T0001, Rev. 1	The Engineering Specification for Pressure Vessel Design and Fabrication requires that WTP vessels shall be designed and fabricated in accordance with ASME Section VIII, Div. 1 Material Requisition 24590-QL-MRA-MKAS-00002, Rev. 1 imposes this specification for the design and fabrication of PVP-SCB-00002. The Mechanical Data Sheet requires a code stamp and National Board Registration. Therefore, this is a standard vessel and the referenced codes and standards are adequate and acceptable for design and fabrication.

	Information Assessed	Source of Information	
	Vessel has adequate strength, after consideration of the corrosion allowance, to withstand the operating pressure, operating temperature, and seismic loads.	Material Requisition, Mechanical Data Sheet and Plant Item Material Selection Data Sheet listed above under References Engineering Specification for Pressure Vessel Design and Fabrication SCN No. 24590-WTP-3PN-MV00-00006 for Spec. No. 24590-WTP-3PS-MV00-T0001, Rev. 1 24590-WTP-3PS-FB01-T0001, Rev 1, Structural Design Loads for Seismic Category III and IV Equipment and Tanks 24590-WTP-3PS-MV00-T0002, Rev. 1, Engineering Specification for Seismic Qualification Criteria for Pressure Vessels;	The Engineering Specification for Pressure Vessel Design and Fabrication requires that WTP vessels are to be designed and fabricated in accordance with ASME B&PV Code, Section VIII, Division 1. Material Requisition 24590-QL-MRA-MKAS-00002 imposes these requirements upon the Scrubber. Section VIII requires specific consideration of operating pressures, temperatures, seismic loads, and corrosion allowance in the design process. The Mechanical Data Sheet identifies the operating pressure and temperature ranges for the scrubber, the materials and the corrosion allowance identified in the Plant Item Material Selection Data Sheet, and references 24590-WTP-3PS-MV00-T0002 for seismic design requirements. The Mechanical Data Sheet indicates that Scrubber PVP-SCB-00002 is seismic category SC-III. The Material Requisition imposes the requirements of 24590-WTP-3PS-FB01-T0001 for structural seismic design loads. These are appropriate codes and standards to ensure the tanks have adequate strength to withstand expected operating pressure, operating temperature, and seismic loads.
Foundation	Vessel foundation will maintain the load of a full vessel.	Mechanical Data Sheet listed above under References Engineering Specification for Pressure Vessel Design and Fabrication; SCN No. 24590-WTP-3PN-MV00-00006 for Spec. No. 24590-WTP-3PS-MV00-T0001, Rev. 1	The Outline Profile of the PTF Vessel Vent Caustic Scrubber included in the Mechanical Data Sheet shows the support arrangements for Scrubber PVP-SCB-00002. The support consists of a cylindrical skirt with a base ring beam to provide for bearing on concrete or support rings and anchorage. The Engineering Specification for Pressure Vessel Design and Fabrication requires vessel supports as illustrated on the Outline Profile. The Mechanical Data Sheet provides the estimated weight of the full vessel.

	Information Assessed	Source of Information	
	If in an area subject to flooding, the vessel is anchored.	General Arrangement Drawing listed above under References 24590-PTF-3PS-MKAS-T0001, Rev. 0, Engineering Specification for PTF Vessel Vent Caustic Scrubber 24590-PTF-PER-M-02-005, Rev. 8, Flooding Volume for Below Grade and 0 Ft. Level in PT Facility	The Vessel Vent Caustic Scrubber is located in room number P-0104, a PT facility black cell at the 0'0" elevation. Per 24590-PTF-PER-M-02-005, the maximum fluid elevation in these cells is approximately 24.7 in. The scrubber is elevated by its support structure to 108". Therefore, flooding is not a consideration for this equipment.
Frost Heave	Vessel system will withstand the effects of frost heave.	PTF General Arrangement Drawing listed above under References 24590-PTF-3PS-MKAS-T0001, Rev. 0, Engineering Specification for PTF Vessel Vent Caustic Scrubber 24590-WTP-DC-ST-01-001, Rev. 3, Structural Design Criteria	As shown on the PTF General Arrangement Plan, 24590-PTF-P1-P01T-P0001 and described in the PTF Vessel Vent Caustic Scrubber Engineering Specification, the scrubber is installed at elevation 0'-0"in an inaccessible process cell. These cells are supported by the PTF mat foundation. The Structural Design Criteria requires that all structural foundations extend into the surrounding soil below the frost line in order to preclude frost heave. The frost line is located 30 in. below finished grade. The PTF mat foundation is not subject to frost heave and therefore, the scrubber, which is supported by the PTF mat foundation, will not be subject to frost heave.

	Information Assessed	Source of Information	
Waste Characteristics	Characteristics of the waste to be stored or treated have been identified (ignitable, reactive, toxic, specific gravity, vapor pressure, flash point, storage temperature	System Description, Process Flow Diagram, P&ID No. 24590-PTF-M6-PVP-P0017, Mechanical Data Sheet, and Plant Items Material Selection Data Sheet and listed above under References. 24590-WTP-PER-PR-03-002, Rev. 1, Toxic Vapors and Emissions from WTP Tank Systems and Miscellaneous Treatment Unit System; 24590-WTP-PER-PR-03-001, Rev. 1, Prevention of Hydrogen Accumulation in WTP Tank Systems and Miscellaneous Treatment Unit Systems	Per the referenced System Description, the function of scrubber PVP-SCB-00002 is to provide confinement of the exhaust gases, absorb soluble NO_x/acid gases, and remove large solid particulates from the exhaust gases. Report 24590-WTP-PER-PR-03-002 discusses control of toxic vapors and emissions from WTP tank systems and MTUs and identifies control equipment. The caustic scrubber is identified as control equipment for toxic vapors and emissions. Report 24590-WTP-PER-PR-03-001 identifies PT MTUs which provide primary containment of wastes that pose a hydrogen accumulation hazard. The scrubber is not included in that list. A waste pH of approximately 7 is maintained by the addition of 5 molar caustic solution from the sodium hydroxide reagent system. The specific gravity and temperature of the contained fluid is identified on the Mechanical Data Sheet. The referenced documents identify all characteristics of the waste that impact vessel design..
	Vessel is designed to store or treat the wastes with the characteristics defined above and any treatment reagents.	Plant Item Material Selection Data Sheet and System Description listed above under References	The Plant Item Material Selection Data Sheet documents the material selection for the Caustic Scrubber based upon the chemistry, pH, and temperature of the collected waste and the operating environment of the equipment. The material selection also includes consideration of regular additions of 5 molar caustic solution to the scrubber sump vessel to control the pH of the scrubbing liquid The Material Data Sheet lists 316 stainless steel (maximum 0.030% Carbon, dual certified) for the column and UNS N08367 for the column and demister packing material.
Compatibility	The waste types are compatible with each other	System Description listed above under References	The Vessel Vent Caustic Scrubber receives a single waste stream from the PTF Vessel Vent Exhaust Header. Therefore, there are no waste type compatibility issues.

	Information Assessed	Source of Information	
	Vessel material and protective coatings ensure the vessel structure is adequately protected form the corrosive effects of the waste stream and external environments (expected to not leak or fail for the design life of the system)	Plant Item Material Selection Data Sheet, Mechanical Data Sheets, and System Description listed above under References 24590-PTF-3PS-MKAS-T0001, Rev. 0, Engineering Specification for PTF Vessel Vent Caustic Scrubber	The material selection process included internal corrosion considerations relevant to the operating conditions of the Caustic Scrubber. Based upon those considerations, the material chosen was 316 stainless steel (maximum 0.030% Carbon, dual certified) for the column and UNS N08367 for the column and demister packing. This selection was based upon a design life of 40 years per the Engineering Specification for PTF Vessel Vent Caustic Scrubber. This material selection is listed on the Mechanical Data Sheet under materials of construction. The Caustic Scrubber is located inside a WTP black cell. These cells normally operate in dry conditions with active ventilation, therefore, external corrosion is not considered to be an issue. Therefore, the materials selected are adequate to provide the required 40 year service life for these vessels.
Corrosion Allowance	Corrosion allowance is adequate for the intended service life of the vessel.	Plant Item Material Selection Data Sheet listed above under References 24590-PTF-3PS-MKAS-T0001, Rev. 0, Engineering Specification for PTF Vessel Vent Caustic Scrubber	The Plant Item Material Selection Data Sheet indicates a recommended corrosion allowance of 0.04 inch for the column and 0.0 inch for the column and demister packing. This recommendation is based upon corrosion rates of the selected materials and a required service life of 40 years without access for maintenance per the scrubber engineering specification. The material selection and recommended corrosion allowance are adequate for the service life for the vessel.
Pressure Controls	Pressure controls (vents and relief valves) are adequately designed to ensure pressure relief if normal operating pressures in the vessel are exceeded.	P&ID and System Description listed above under References	Normal operation of the Caustic Scrubber is transfer of collected condensate and scrubbing liquid from the sump vessel once a day or at high set point of the level indicator to PWD-VSL-00044. The sump vessel also has an overflow line to vessel PWD-VSL-00033, the PWD plant overflow vessel. As the overflow line is larger than the normal transfer line (6" versus 4"), this configuration is considered adequate to ensure relief if normal operating pressure is exceeded.

R10462175

STRUCTURAL INTEGRITY ASSESSMENT OF THE PRETREATMENT FACILITY (PTF) TREATED LAW EVAPORATION PROCESS (TLP) SYSTEM LAW SBS CONDENSATE RECEIPT VESSELS (TLP-VSL-00009A&B)

BECHTEL

Job No. 24590

Bechtel National, Inc.

SUPPLIER DOCUMENT STATUS

1. [X] **Work may proceed.**
2. [ ] **Revise and resubmit. Work may proceed subject to resolution of indicated comments.**
3. [ ] **Revise and resubmit. Work may not proceed.**
4. [ ] **Review not required. Work may proceed.**

Permission to proceed does not constitute acceptance or approval of design details, calculations, analyses, test methods, or materials developed or selected by the supplier and does not relieve supplier from full compliance with contractual obligations.

REVIEWED									

G-321 Document Category N/A
[From Supplement A to G-321-E (E) or G-321-V (V), as applicable, or "N/A" if SSRS is used]

Supersedes BNI Document No. N/A Rev. _____
[When applicable]

Accepted by D C Pfluger _____ 1/31/05
Print Name Signature Date

Released by N/A _____ _____
[When applicable] Print Name Signature Date

416 GP&S 7-03

Please note that source, special nuclear and byproduct materials, as defined in the Atomic Energy Act of 1954 (AEA), are regulated at the U.S. Department of Energy (DOE) facilities exclusively by DOE acting pursuant to its AEA authority. DOE asserts, that pursuant to the AEA, it has sole and exclusive responsibility and authority to regulate source, special nuclear, and byproduct materials at DOE-owned nuclear facilities. Information contained herein on radionuclides is provided for process description purposes only.

24590-CM-HC4-HXYG-00138-02-00054 Rev. 00A

IQRPE REVIEW
OF
THE PRETREATMENT FACILITY (PTF) TREATED LAW EVAPORATION PROCESS (TLP) SYSTEM LAW SBS CONDENSATE RECEIPT VESSELS (TLP-VSL-00009A&B)

"I, Tarlok Hundal, have reviewed, and certified a portion of the design of a new tank system or component located at the Hanford Waste Treatment Plant, owned/operated by Department of Energy, Office of River Protection, Richland, Washington. My duties were independent review of the current design for the Pretreatment Facility (PTF) Treated LAW Evaporation Process (TLP) System Law SBS Condensate Receipt Vessels (TLP-VSL-00009A&B) as required by the Washington Administrative Code, *Dangerous Waste Regulations*, Section WAC-173-303-640 (3)(a) through (g) applicable components."

"I certify under penalty of law that I have personally examined and am familiar with the information submitted in this document and all attachments and that, based on my inquiry of those individuals immediately responsible for obtaining the information, I believe that the information is true, accurate, and complete. I am aware that there are significant penalties for submitting false information, including the possibility of fine and imprisonment."

The documentation reviewed indicates that the design intent fully satisfies the requirements of the WAC.

The attached review is six pages numbered 1 through 6.

TARLOK SINGH HUNDAL
STATE OF WASHINGTON
20213
REGISTERED
PROFESSIONAL ENGINEER

EXPIRES: 02/15/06

T S Hundal
Signature

1/26/05
Date

Scope	Scope of this Integrity Assessment	The scope of this integrity assessment includes the Pretreatment Facility TLP System's two LAW SBS Condensate Receipt Vessels (TLP-VSL-00009A & TLP-VSL-00009B).
References	Material Requisition, Specifications, and Drawings.	Material Requisition: 24590-CM-MRB-MVA0-00001, Rev. 1 (including MR Supplement Nos. S0004, S0005, S0006, S0010, S0011, and S0012). Specifications: The following Specifications with their respective revision and specification change notices are listed in the above Material Requisition: 24590-WTP-3PS-MV00-T0001, Engineering Specification for Pressure Vessel Design and Fabrication; 24590-WTP-3PS-MV00-T0002, Engineering Specification for Seismic Qualification Criteria for Pressure Vessels; 24590-WTP-3PS-MV00-T0003, Engineering Specification for Pressure Vessel Fatigue Analysis; 24590-WTP-3PS-G000-T0001, General Specification for Supplier Quality Assurance Program Requirements; 24590-WTP-3PS-G000-T0002, Engineering Specification for Positive Material Identification (PMI); 24590-WTP-3PS-G000-T0003, General Specification for Packaging, Shipping, Handling, and Storage Requirements; 24590-WTP-3PS-FB01-T0001, Engineering Specification for Structural Design Loads for Seismic Category III/IV Equipment and Tanks. Drawings (including drawing change notices listed in the Material Requisition referenced above): 24590-PTF-MV-TLP-00001, Rev. 0, Equipment Assembly LAW SBS Condensate Receipt Vessel TLP-VSL-00009A; 24590-PTF-MV-TLP-00002, Rev. 0, Equipment Assembly LAW SBS Condensate Receipt Vessel TLP-VSL-00009B; 24590-PTF-P1-P01T-P0001, Rev. 4, Pretreatment Facility General Arrangement Plan at El. 0'-0"; 24590-PTF-P1-P01T-P0010, Rev. 5, Pretreatment Facility General Arrangement Section D-D; 24590-PTF-P1-P01T-P0014, Rev. 7, Pretreatment Facility General Arrangement Sect. L-L and Sect. K-K; 24590-PTF-M5-V17T-P0005, Rev. 0, Process Flow Diagram Treated LAW Evaporation System (TLP).
Summary of Assessment		For each item of "Information Assessed" (i.e., Criteria) on the following pages, the items listed under "Source of Information" were reviewed and found to furnish adequate design controls and requirements to ensure that the design intent fully satisfies the requirements of Washington Administrative Code, WAC-173-303-640, *Dangerous Waste Regulations* for Tank Systems.

Information Assessed		Source of Information	Discussion
Design	Vessel design standards are appropriate and adequate for the vessel's intended use.	Drawings, Material Requisition, and Specifications listed above under References; Mechanical Data Sheet, 24590-PTF-MVD-TLP-00001, Rev. 4, LAW SBS Condensate Receipt Vessel TLP-VSL-00009A; Mechanical Data Sheet, 24590-PTF-MVD-TLP-00002, Rev. 4, LAW SBS Condensate Receipt Vessel TLP-VSL-00009B; ASME Section VIII, Division 1, Rules for Construction of Pressure Vessels, American Society of Mechanical Engineers.	The Material Requisition requires the use of Engineering Specification for Pressure Vessel Design and Fabrication for TLP-VSL-00009A&B vessels. This specification requires that the vessels and all appurtenances are to be designed to the ASME Section VIII, Division 1 Code rules. These rules are appropriate for an unfired pressure vessel operating with aqueous mixed waste solutions over the pressure and temperature range specified for this vessel. Additional supplementary requirements are specified in the specification for Pressure Vessel Design and Fabrication. These supplementary requirements address pressure vessel fatigue analysis, positive material identification, standard fabrication tolerances, acceptable welding procedures for the vessel and appurtenances, welder qualifications and testing records, NDE inspections and records, quality assurance requirements, and packaging, shipping, handling and storage requirements. The Mechanical Data Sheets identify the TLP vessels as Quality Level (CM, Commercial Grade) and Seismic Category (SC-III) equipment. The above stated codes and standards are adequate and acceptable for the intended use of these Commercial Grade vessels. Each TLP-VSL-00009A&B vessel is vertical. The drawings and Mechanical Data Sheets show each vessel size as 312" ID by 328" tangent to tangent height, supported on a 65" high cylindrical skirt which in turn is supported on a ring beam to be anchored to the floor concrete slab. Top and bottom heads are flanged and dished type. The shell, heads, and skirt are to be built with a 1 in. minimum thick plate. Material for the shell, heads, and internals is to be UNS N08367 (a 6% Molybdenum stainless steel alloy), hereinafter described as 6% Mo stainless steel. Material for the support skit is specified as 304 stainless steel (maximum 0.030% Carbon), hereinafter described as 304L stainless steel. The maximum operating volume is to be about 114,000 gallons and the total internal volume is to be about 130,000 gallons.

Information Assessed		Source of Information	Discussion
Design	If a non-standard vessel is to be used, the design calculations demonstrate sound engineering principles of construction.	Specifications listed above under References; ASME Section VIII, Division 1, Rules for Construction of Pressure Vessels, American Society of Mechanical Engineers.	The TLP system vessels TLP-VSL-00009A&B are standard vessels. The Engineering Specification for Pressure Vessel Design and Fabrication require that these vessels are to be designed and fabricated in accordance with the requirements of ASME Section VIII, Division 1 Code. The vessels are to be delivered after design, fabrication, inspection and testing with an ASME code stamp and the vessels will be registered with the National Board. These are shop fabricated vessels for mixed waste service in the PTF. The vessel design standards are appropriate and adequate for the vessels' design and fabrication.
Design	Vessel has adequate strength, after consideration of the corrosion allowance, to withstand the operating pressure, operating temperature, and seismic loads.	Specifications listed above under References; Mechanical Data Sheet, 24590-PTF-MVD-TLP-00001, Rev. 4, LAW SBS Condensate Receipt Vessel TLP-VSL-00009A; Mechanical Data Sheet, 24590-PTF-MVD-TLP-00002, Rev. 4, LAW SBS Condensate Receipt Vessel TLP-VSL-00009B; ASME Section VIII, Division 1, Rules for Construction of Pressure Vessels, American Society of Mechanical Engineers; UBC, 1997, Uniform Building Code, International Conference of Building Officials.	The Engineering Specification for Pressure Vessel Design and Fabrication requires that the TLP vessels are to be designed to ASME Section VIII, Division 1 Code rules. This code requires specific consideration of the operating pressures, temperatures, seismic loads, and corrosion/erosion allowance in the design process. Supplementary design criteria are specified in the Engineering Specifications for Seismic Qualification Criteria and Structural Design Loads for Seismic Category III & IV Equipment and Tanks to provide for the seismic design analysis. The Mechanical Data Sheets identify the operating pressure and temperature ranges for each vessel, the materials selected in the corrosion report, the corrosion allowance, and the requirements for seismic qualification in the design. The Mechanical Data Sheets indicate that vessels TLP-VSL-00009A&B are to be analyzed as Seismic Category (SC-III) vessels which requires use of the seismic design requirements in the 1997 UBC. These are appropriate codes and criteria to ensure that the vessels have adequate strength at the end of their design lives.
Foundation	Vessel foundation will maintain the load of a full vessel.	Drawings and Specifications listed above under References.	The Equipment Assembly drawings show the support arrangements for TLP-VSL-00009A&B. These vessels are provided with cylindrical skirts and a ring beam to provide for bearing on concrete and anchorage. The Engineering Specification for Pressure Vessel Design and Fabrication requirements ensure adequate vessel foundation designs.

Information Assessed		Source of Information	Discussion
Foundation	If in an area subject to flooding, the vessel is anchored.	Specifications listed above under References.	Buoyant forces of an empty vessel in a flooded room are a mandatory standard design load case in the Engineering Specifications for Pressure Vessel Design and Fabrication.
Frost Heave	Vessel system will withstand the effects of frost heave.	Drawings listed above under References; 24590-PTF-3YD-TLP-00001, Rev. 0, System Description for Treated LAW Evaporation Process (TLP), including System Description Change Notice (SDCN) No. 24590-PTF-3YN-TLP-00001; 24590-WTP-DC-ST-01-001, Rev. 6, Structural Design Criteria.	The System Description and PTF general arrangement plan drawing for Elevation 0'-0" shows that vessels TLP-VSL-00009A&B are installed in the inaccessible process cells. These cells are supported by the PTF mat foundation. The Structural Design Criteria requires that all structural foundations extend into the surrounding soil below the frost line in order to preclude frost heave. The frost line is located 30 in. below finished grade. The 8-ft thick PTF mat foundation is not subject to the frost heave; therefore, the TLP system vessels will not be subject to frost heave effects.
Waste Characteristics	Characteristics of the waste to be stored or treated have been identified (ignitable, reactive, toxic, specific gravity, vapor pressure, flash point, storage temperature)	Drawings listed above under References; 24590-PTF-3YD-TLP-00001, Rev. 0, System Description for Treated LAW Evaporation Process (TLP), including System Description Change Notice (SDCN) No. 24590-PTF-3YN-TLP-00001. 24590-WTP-PER-PR-03-002, Rev. 1, Toxic Vapors and Emissions from WTP Tank Systems and Miscellaneous Treatment Unit Systems; 24590-WTP-PER-PR-03-001, Rev. 1, Prevention of Hydrogen Accumulation in WTP Tank Systems and Miscellaneous Treatment Unit Systems.	The System Description identifies that TLP-VSL-00009A & B receive primarily condensate from the LAW vitrification submerged bed scrubbers (SBSs) in the LAW primary offgas treatment system. This condensate is normally adjusted to a pH of 12 by the addition of NaOH before it is recycled through the TLP evaporator system. Waste characteristics that are hazardous, such as ignitability, reactivity, and toxicity are appropriately addressed in the Toxic Vapors and Emissions document and Prevention of Hydrogen Accumulation document. These two documents do not specifically list these vessels to exhibit any hazardous characteristics. As shown on the assembly drawing, the vessels are furnished with grounding lugs to control the discharge of static electricity and are equipped with pulse jet mixers and passive air inlet lines for hydrogen control during normal and abnormal operations and during and after design level seismic events. The vessels are equipped with internal spray rings for decontamination.

	Information Assessed	Source of Information	Discussion
Waste Characteristics	Vessel is designed to store or treat the wastes with the characteristics defined above and any treatment reagents.	Plant Item Material Selection Data Sheet, 24590-PTF-N1D-TLP-P0001, Rev. 1, LAW SBS Condensate Receipt Vessels TLP-VSL-00009A&B (PTF).	The Plant Item Material Selection Data Sheet shows that the material selected for TLP-VSL-00009A & B takes into account the reagents added to the waste received in the vessels.
	The waste types are compatible with each other.	24590-PTF-3YD-TLP-00001, Rev. 0, System Description for Treated LAW Evaporation Process (TLP), including System Description Change Notice (SDCN) No. 24590-PTF-3YN-TLP-00001.	The TLP System Description document identifies that the primary liquids used in vessels TLP-VSL-00009A&B are LAW SBS condensate and other dilute wastes generated in LAW operations. When received, these wastes are adjusted to pH 12 so they can be recycled through the TLP evaporator system. These wastes are compatible. No other wastes are managed in these vessels. The primary function of the TLP System vessels is to increase the concentration of Treated Low Activity Waste (LAW) feed prior to transfer to the LAW vitrification facility for glassification.
Compatibility	Vessel material and protective coatings ensure the vessel structure is adequately protected form the corrosive effects of the waste stream and external environments (expected to not leak or fail for the design life of the system)	Plant Item Material Selection Data Sheet, 24590-PTF-N1D-TLP-P0001, Rev. 1, LAW SBS Condensate Receipt Vessels TLP-VSL-00009A&B (PTF).	The Plant Item Material Selection Data Sheet shows that the material selected for TLP-VSL-00009A & B takes into account the acidic nature of the LAW SBS condensate received from the LAW facility and the reagents added to the waste received in the vessel. The material selected for the vessels is 6% Mo stainless steel. The material selected is adequate to provide the required 40 year service life for these vessels.

Information Assessed		Source of Information	Discussion
Corrosion Allowance	Corrosion allowance is adequate for the intended service life of the vessel.	Plant Item Material Selection Data Sheet, 24590-PTF-N1D-TLP-P0001, Rev. 1, LAW SBS Condensate Receipt Vessels TLP-VSL-00009A&B (PTF); Mechanical Data Sheet, 24590-PTF-MVD-TLP-00001, Rev. 4, LAW SBS Condensate Receipt Vessel TLP-VSL-00009A; Mechanical Data Sheet, 24590-PTF-MVD-TLP-00002, Rev. 4, LAW SBS Condensate Receipt Vessel TLP-VSL-00009B.	The corrosion allowance is recommended in the Plant Item Material Selection Data Sheet. The uniform corrosion allowance of 0.040 in. for shell and heads (plus additional 0.056 in. for the bottom head to compensate for erosion due to pulse jet mixers cyclic operations) for a 40-year vessel life is adequate for 6% Mo stainless steel in this waste environment. The material selection is correctly carried forward to the vessels Mechanical Data Sheet. The materials chosen, welding processes selected, surface preparation, and pre-service inspections are appropriate for this caustic waste service. The vessel design provides internal spray wash rings to provide for periodic internal cleaning of the vessel.
Pressure Controls	Pressure controls (vents and relief valves) are adequately designed to ensure pressure relief if normal operating pressures in the vessel are exceeded.	Drawings listed above under References.	The Equipment Assembly drawings show that each TLP-VSL-00009A&B vessel is equipped with an unrestricted 8 in. diameter overflow line and Process Flow Diagram drawing shows that this line drains to Plant Wash and Disposal System vessel (PWD-VSL-00033) located at a lower level, Elevation (-) 45'-0" in the PTF as shown on the general arrangement drawings. This overflow line is much larger than any of the lines entering the vessel and therefore, has an adequate flow capacity to preclude overpressure.

R10656140

COGEMA-IA-083, Rev. 0

STRUCTURAL INTEGRITY ASSESSMENT OF THE PRETREATMENT FACILITY (PTF) ELEVATION (-) 2'-0" SECONDARY CONTAINMENT OF RADIOACTIVE LIQUID WASTE DISPOSAL SYSTEM (RLD) TANKS (RLD-TK-00006 A/B)

BECHTEL

Job No. 24590

Bechtel National, Inc.

SUPPLIER DOCUMENT STATUS

1. [X] Work may proceed.
2. [ ] Revise and resubmit. Work may proceed subject to resolution of indicated comments.
3. [ ] Revise and resubmit. Work may not proceed.
4. [ ] Review not required. Work may proceed.

Permission to proceed does not constitute acceptance or approval of design details, calculations, analyses, test methods, or materials developed or selected by the supplier and does not relieve supplier from full compliance with contractual obligations.

REVIEWED									ENS
									BHE

G-321 Document Category N/A
[From Supplement A to G-321-E (E) or G-321-V (V), as applicable, or "N/A" if SSRS is used]

Supersedes BNI Document No. N/A Rev. _____
[When applicable]

Accepted by DC Pfluger (Print Name) DC Pfluger (Signature) 11/27/05 (Date)

Released by N/A (Print Name) _____ (Signature) _____ (Date)
[When applicable]

416 GP&S 7-03

Please note that source, special nuclear and byproduct materials, as defined in the Atomic Energy Act of 1954 (AEA), are regulated at the U.S. Department of Energy (DOE) facilities exclusively by DOE acting pursuant to its AEA authority. DOE asserts, that pursuant to the AEA, it has sole and exclusive responsibility and authority to regulate source, special nuclear, and byproduct materials at DOE-owned nuclear facilities. Information contained herein on radionuclides is provided for process description purposes only.

24590-CM-HC4-HX4G-00138-02-00057 REV00A

IQRPE REVIEW
OF
THE PRETREATMENT FACILITY (PTF) ELEVATION (-) 2'-0" SECONDARY CONTAINMENT OF RADIOACTIVE LIQUID WASTE DISPOSAL SYSTEM (RLD) TANKS (RLD-TK-00006 A/B)

"I, Tarlok Hundal have reviewed and certified a portion of the design of a new tank system or component located at the Hanford Waste Treatment Plant, owned/operated by Department of Energy, Office of River Protection, Richland, Washington. My duties were independent review of the current design for the Pretreatment Facility (PTF) Elevation (-) 2'-0" Secondary Containment of RLD Tanks (RLD-TK-00006 A/B) as required by the Washington Administrative Code, *Dangerous Waste Regulations*, Section WAC-173-303-640(3) (a) through (g) applicable components."

"I certify under penalty of law that I have personally examined and am familiar with the information submitted in this document and all attachments and that, based on my inquiry of those individuals immediately responsible for obtaining the information, I believe that the information is true, accurate, and complete. I am aware that there are significant penalties for submitting false information, including the possibility of fine and imprisonment."

The documentation reviewed indicates that the design fully satisfies the requirements of the WAC.

The attached review is ten (10) pages numbered one (1) through ten (10).

TARLOK SINGH HUNDAL
STATE OF WASHINGTON
20213
REGISTERED
PROFESSIONAL ENGINEER

EXPIRES: 02/15/06

Signature

11-29-05
Date

Scope	Scope of this Integrity Assessment	This integrity assessment addresses the Pretreatment Facility (PTF) Secondary Containment of RLD tanks (RLD-TK-00006A/B) located outside the north east end of the main building in an area designated as Area 7 and Room P-0150 at Elev. (-) 2'-0" as shown on Drawings 24590-PTF-P1-P01T-00001 and 24590-PTF-P1-P23T-00107.
References	Drawings	H-2-829714, Rev. 1, Privatization Site Legal Descriptions; 24590-BOF-P1-50-00001, Rev. 5, RPP-WTP Plot Plan; 24590-BOF-C2-C12T-00002, Rev. 6, RPP-WTP Site General Arrangement Plan; 24590-BOF-C0-C12T-00003, Rev. 0, Abbreviations, Symbols and General Notes; 24590-BOF-CG-C12T-00001, Rev. 0, Final Grading Key Plan; 24590-BOF-CG-C12T-00007, Rev. 0, Final Grading Plan Area 7; 24590-PTF- P1- P01T- 00001, Rev. 6, Pretreatment Facility General Arrangement Plan at El. 0'-0"; 24590-PTF- P1- P01T- P0012, Rev. 6, Pretreatment Facility General Arrangement Sect. F-F and Sect. G-G; 24590-PTF- P1- P01T- P0013, Rev. 5, Pretreatment Facility General Arrangement Sect. H-H and Sect. J-J. 24590-PTF-MT-RLD-00001, Rev. B, Equipment Assembly Process Condensate Tanks RLD-TK-00006A & 6B; 24590-PTF-P1-P23T-00107, Rev. 4, Pretreatment Facility Equipment Location Plan at El. 0'-0"/Area 7; 24590-PTF-DB-S13T-00025, Rev. A, Pretreatment Facility Structural Concrete Forming RLD Tanks Secondary Cont. Foundation and Floor Plan; 24590-PTF-DB-S13T-00026, Rev. A, Pretreatment Facility Structural Concrete Forming RLD Tanks Secondary Containment Sections; 24590-PTF-DB-S13T-00027, Rev. A, Pretreatment Facility Structural Concrete Forming RLD Tanks Secondary Containment Sections & Details; 24590-PTF-DG-S13T-00028, Rev. A, Pretreatment Facility Structural Concrete Reinforcement RLD Tanks Secondary Containment Foundation and Floor Plan; 24590-PTF-DG-S13T-00029, Rev. A, Pretreatment Facility Structural Concrete Reinforcement RLD Tanks Secondary Cont. Sections & Details; 24590-WTP-D0-S13T-00002, Rev. 2, Civil/Structural Standards General Notes; 24590-WTP-D0-S13T-00003, Rev. 2, Civil/Structural Standards Abbreviations and Legend; 24590-WTP-D0-S13T-00004, Rev. 2, Civil/Structural Standards Concrete Notes; 24590-WTP-DG-S13T-00001, Rev. 0, Civil/Structural Standards Concrete Reinforcement Details; 24590-WTP-DG-S13T-00005, Rev. 3, Civil/Structural Standards Concrete Reinforcement Details.

Summary of Assessment	For each item of "Information Assessed" (i.e., Criteria) on the following pages, the items listed under "Source of Information" were reviewed and found to furnish adequate design requirements and controls to ensure that the design fully satisfies the requirements of Washington Administrative Code, WAC-173-303-640, *Dangerous Waste Regulations* for Tank Systems.

Information Assessed		Source of Information	Assessment
Foundation Design	Description of subsurface conditions and soil bearing capacity are adequate.	Drawings listed above under References; 24590-PTF-MTD-RLD-00001, Rev. B Mechanical Data Sheet for Tanks (RLD-TK-00006A/B); 24590-PTF-DGC-S13T-00035, Rev. A Secondary Containment for RLD Tanks, (including Engineering Calculation Change Notice, ECCN # 24590-PTF-DGE-S13T-00026, to Rev. A); 24590-WTP-DC-ST-01-001, Rev. 9, Structural Design Criteria; 24590-PTF-S0C-S15T-00010, Rev. 1, Pretreatment Building-Soil Springs; 24590-BOF-3PS-CE00-T0001, Rev. 0, Site Work. 24590-BOF-3PS-CE01-T0001, Rev. 5, Engineering Specification for Excavation and Backfill; 24590-BOF-3PS-C000-T0001, Rev. 3, Engineering Specification for Material Testing Services.	The Mechanical Data Sheet for Radioactive Liquid Waste Disposal system (RLD) tanks (RLD-TK-00006A/B) lists the Quality Level as Commercial Grade (CM) and Seismic Category as SC-III for these tanks. The Quality Level and Seismic Category of the secondary containment structure for these tanks are also appropriately identified as CM and SC-III, respectively, in the drawings and in the Secondary Containment for RLD Tanks (structural design calculations). The Structural Design Criteria and Pretreatment Building-Soil Springs documents provide adequate applicable design guidance for the foundation designs based on the site soil properties determined based on the current geotechnical investigation reports for the WTP facility. The Structural Design Criteria recommends to design the mat on elastic foundation using soil springs. The Secondary Containment for RLD Tanks (structural design calculations) used the soil spring constants as determined in the Pretreatment Building-Soil Springs document. The specifications Site Work and Excavation and Backfill identify the limits and to remove unsuitable materials under the foundations. The Specification for Excavation and Backfill provides structural backfill requirements based on the geotechnical investigation report and applicable codes and standards for the selection, placing, compacting, and backfill testing of candidate fill materials and completed backfills. The Specification for Material Testing Services provides adequate codes and standards for testing of the candidate structural fill materials and in-situ testing of structural fills as they are placed. The codes and standards are consistent with those called out in the Specification for Excavation and Backfill. The subsurface conditions and soil bearing capacities (soil springs) are adequately described and or computed for the secondary containment foundation design.

Information Assessed		Source of Information	Assessment
Foundation Design	Foundation design loads (including full tanks) and estimated settlement are adequately considered.	24590-WTP-DC-ST-01-001, Rev. 9, Structural Design Criteria; ASCE 7-98, Minimum Design Loads for Buildings and Other Structures, American Society of Civil Engineers; ACI 318-99, Building Code Requirements for Structural Concrete, American Concrete Institute; 24590-PTF-DGC-S13T-00035, Rev. A Secondary Containment for RLD Tanks, (including Engineering Calculation Change Notice, ECCN # 24590-PTF-DGE-S13T-00026, to Rev. A).	The Structural Design Criteria uses current adequate standards to define design loads and load combinations (ASCE 7-98 and ACI 318-99). Dead and fluid loads are included in these loads and load combinations. Settlement design parameters are included in the Structural Design Criteria subsection on "geotechnical design parameters and foundation design." Review of the Secondary Containment for RLD Tanks (structural design calculations) shows that the full loads of the tanks have been appropriately considered in the foundation design.
	Design calculation approach and design basis of footings with design standard references (e.g., ACI) are adequate.	24590-WTP-DC-ST-01-001, Rev. 9, Structural Design Criteria; ACI 318-99, Building Code Requirements for Structural Concrete, American Concrete Institute; 24590-PTF-DGC-S13T-00035, Rev. A Secondary Containment for RLD Tanks, (including Engineering Calculation Change Notice, ECCN # 24590-PTF-DGE-S13T-00026, to Rev. A). 24590-WTP-VV-ST-01-001, Rev. 4, Verification and Validation Test Plan and Test Report for GTSTRUDL.	The Structural Design Criteria references current adequate design criteria for the design of concrete foundations and footings. ACI 318-99 is referenced for the design of SC-III structures. Review of the Secondary Containment for RLD Tanks (structural design calculations) provides the design approach, basis, and methodology used for the design of the secondary containment foundations/footings. The above mentioned codes and standards, design approach, methodology, and basis delineated are appropriate and adequate for the foundation design. The input parameters used in the GTSTRUDL computer code utilized for this secondary containment design are appropriates and the output results have been appropriately validated via the Verification and Validation Test Plan and Test Report document.

Information Assessed		Source of Information	Assessment
Foundation Design	Foundation material is compatible with the soil.	Drawings listed above under References; 24590-WTP-3PS-DB01-T0001, Rev. 7, Engineering Specification for Furnishing and Delivering Ready-Mix Concrete; 24590-WTP-3PS-DG00-T0001, Rev. 3, Engineering Specification for Reinforcing Steel; 24590-PTF-DGC-S13T-00035, Rev. A Secondary Containment for RLD Tanks, (including Engineering Calculation Change Notice, ECCN # 24590-PTF-DGE-S13T-00026, to Rev. A); 24590-BOF-3PS-C000-T0001, Rev. 3, Engineering Specification for Material Testing Services; 24590-WTP-DB-ENG-01-001, Rev. 1C, Basis of Design.	The materials for secondary containment structure and backfill used under it are consistently identified in the specifications, drawings, and calculations. The Specification for Furnishing and Delivering Ready-Mix Concrete provides adequate current testing requirements for the selection of coarse and fine aggregates and the procurement of cementitious materials. Adequate test procedures are provided in the Material Testing Services specification for testing candidate aggregates for chemical reactivity. Instructions for mixing and delivering ready-mix concrete are adequate and current. As noted in the Basis of Design document (Section 4.7), the groundwater table is more than 250 feet below the ground surface; therefore, no compatibility problem is expected between the concrete foundations and the surrounding backfill materials used under and around it.
Frost Heave	Foundation will withstand the effects of frost heave	Drawings listed above under References; 24590-WTP-DC-ST-01-001, Rev. 9, Structural Design Criteria.	The Structural Design Criteria includes adequate provisions to preclude frost heave in the section addressing lateral earth pressure loads. All structural foundations are required to extend into the soil below the frost line to preclude frost heave. The frost line depth is 30 in. below the finished grade. The structural drawings show that the thickness of concrete foundation mat of Room P-0150 varies from 4.5 ft to 3.25 ft and its bottom elevation is at least 39 in. below the finished grade or below the finished concrete elevation, therefore, the foundation mat will not be subject to frost heave effects.

Information Assessed		Source of Information	Assessment
Seismic Design	Seismic considerations have been adequately addressed.	24590-WTP-DC-ST-01-001, Rev. 9, Structural Design Criteria; 24590-WTP-SRD-ESH-01-001-02, Rev. 3x, Safety Requirements Document (SRD) Volume II. ACI 318-99, Building Code Requirements for Structural Concrete, American Concrete Institute; UBC-97, Uniform Building Code, International Conference of Building Officials; 24590-PTF-DGC-S13T-00035, Rev. A Secondary Containment for RLD Tanks, (including Engineering Calculation Change Notice, ECCN # 24590-PTF-DGE-S13T-00026, to Rev. A).	This secondary containment structure is classified as seismic category SC-III structure. The Structural Design Criteria and SRD documents provide codes and standards applicable for the design of SC-III structures. These documents require using the ACI 318-99 concrete code utilizing the UBC-97 code to determine the seismic forces for the design of SC-III structures. The ACI 318-99 code identifies all loads and load combinations for design of the secondary containment reinforced concrete foundations and structures. These codes and standards are adequate and acceptable for addressing seismic considerations. Review of the Secondary Containment for RLD Tanks (structural design calculations) shows that the applicable seismic codes and standard requirements have been appropriately considered and complied with the design of this secondary containment structure.
Compatibility	The stored waste is compatible with its Secondary Containment and leak detection hardware based on a detailed chemical and physical analysis of the wastes used and other information sources.	24590-WTP-DB-ENG-01-001, Rev. 1C, Basis of Design; 24590-WTP-PER-CSA-02-001, Rev. 7, Secondary Containment Design. 24590-WTP-PER-M-02-001, Rev. 3, Material Selections for Building Secondary Containment/Leak Detection; Bechtel National, Inc. (BNI) CCN # 126217, RLD Tank Secondary Containment Coating Considerations-Response to IQRPE Questions (T Coutts email message to DC Pfluger, dated Nov. 23, 2005, 10:23 AM); 24590-WTP-3PS-AFPS-TP006, Rev. 1, Engineering Specification for Field Applied Special Protective Coatings for Secondary Containment Areas.	The Basis of Design states that tank system shall provide for sump and leak detection equipment which are appropriately lined and any spills are removed and flushed within 24-hr or as timely as possible. The Secondary Containment Design document provides details for application of special protective coatings for this secondary containment area. Based on the detailed analysis of the corrosive properties of the expected waste process operations and evaluation of potential leak scenarios, the Material Selections and BNI CCN # 126217 documents identify appropriate and adequate environmental and corrosion resistant materials requirements for secondary containment coatings, liners, sumps and leak detection equipment. The Engineering Specification for Field Applied Special Protective Coatings (SPCs) provides the selection test criteria used to determine acceptable approved coating systems. These test criteria include chemical resistance endurance requirements and wear abrasion resistance criteria. The above mentioned documents provide adequate information that the materials and hardware used are compatible with the waste.

Information Assessed		Source of Information	Assessment
Strength	The design shows that the Secondary Containment has sufficient strength and thickness to prevent failure owing to pressure gradients, static head during a release, physical contact with the waste, climatic conditions, and the stress of daily operations (e.g., vehicular traffic).	Drawings listed above under References; 24590-WTP-DC-ST-01-001, Rev. 9, Structural Design Criteria; 24590-WTP-PER-M-02-001, Rev. 3, Material Selections for Building Secondary Containment/Leak Detection, Bechtel National, Inc. (BNI) CCN # 126217, RLD Tank Secondary Containment Coating Considerations-Response to IQRPE Questions (T Coutts email message to DC Pfluger, dated Nov. 23, 2005, 10:23 AM); 24590-PTF-DGC-S13T-00035, Rev. A Secondary Containment for RLD Tanks, (including Engineering Calculation Change Notice, ECCN # 24590-PTF-DGE-S13T-00026, to Rev. A).	The Structural Design Criteria document identifies adequate and appropriate design codes and standards and all applicable load cases from site specific conditions that must be considered in the design. Factors that were considered for special protective coating (SPC) material selection are adequately discussed in the Material Selections and BNI CCN # 126217 documents. Review of the Secondary Containment for RLD Tanks (structural design calculations) shows that all components of the secondary containment have been adequately designed for the applicable loads including static head, light traffic and equipment applications, and other natural phenomenon hazards. No heavy vehicular traffic is expected inside the bermed wall area. The thickness of SPC is adequately designed to sustain applicable stress and/or loading and environmental conditions. The structural design calculations show that the foundation mat is adequately designed to sustain the applicable loads imposed by the RLD-TK-0006A/B tanks to the mat at the interface of tank bottom and top of concrete pad. However, the integrity assessment of the tank including its anchoring system to the concrete pad is out of scope of this assessment. Integrity assessment of tanks is conducted in a separate report.

Information Assessed		Source of Information	Assessment
Strength	The Secondary Containment system has sufficient strength in the presence of operational stresses from site-specific conditions (i.e., traffic, heavy equipment, precipitation, frost).	Drawings listed above under References; 24590-WTP-DC-ST-01-001, Rev. 9, Structural Design Criteria; 24590-WTP-PER-M-02-001, Rev. 3, Material Selections for Building Secondary Containment/Leak Detection; Bechtel National, Inc. (BNI) CCN # 126217, RLD Tank Secondary Containment Coating Considerations-Response to IQRPE Questions (T Coutts email message to DC Pfluger, dated Nov. 23, 2005, 10:23 AM); 24590-PTF-DGC-S13T-00035, Rev. A Secondary Containment for RLD Tanks, (including Engineering Calculation Change Notice, ECCN # 24590-PTF-DGE-S13T-00026, to Rev. A).	The Structural Design Criteria document identifies adequate and appropriate design codes and standards and all applicable load cases (operational stresses) from site specific conditions that must be considered in the design. The Material Selections document considers mechanical factors including foot traffic, fork lift operations, and dropping of equipment. No heavy traffic or heavy equipment are expected within the secondary containment walls, however, precipitation and other applicable inclement weather and natural environmental effects have been considered in the Material Selections and BNI CCN # 126217 documents. The Secondary Containment for RLD Tanks (structural design calculations) document shows that it has adequate strength to sustain all applicable loads. The structural drawings show that the thickness of concrete foundation mat of Room P-0150 varies from 4.5 ft to 3.25 ft and its bottom elevation is at least 39 in. below the finished grade or below the finished concrete elevation, therefore, the foundation mat will not be subject to frost heave effects.

Information Assessed		Source of Information	Assessment
Foundation Integrity	The Secondary Containment is properly supported by a foundation or base in order to prevent failure from settlement, compression, or uplift, including the residual effects of installation.	Drawings listed above under References; 24590-WTP-DC-ST-01-001, Rev. 9, Structural Design Criteria; 24590-BOF-3PS-CE00-T0001, Rev. 0, Site Work. 24590-BOF-3PS-CE01-T0001, Rev. 5, Engineering Specification for Excavation and Backfill; 24590-BOF-3PS-C000-T0001, Rev. 3, Engineering Specification for Material Testing Services; 24590-PTF-DGC-S13T-00035, Rev. A Secondary Containment for RLD Tanks, (including Engineering Calculation Change Notice, ECCN # 24590-PTF-DGE-S13T-00026, to Rev. A).	The Structural Design Criteria adequately identifies the applicable parameters to be used for the foundation design. The design requirements, codes and standards, and documents specified are adequate to satisfy the performance goals of the secondary containment structure. The technical specifications for Site Work and Excavation and Backfill adequately provide adequate details for base material used under the foundation and for its proper installation. The drawings show the secondary containment location, boundaries, and details. The specifications for Site Work and Excavation and Backfill identify the removal of unsuitable materials under the foundations. Specification for Excavation and Backfill also identify inspections, and materials and compaction testing requirements to ensure adequate base support for the foundation to prevent its failure due to settlement, compression, or uplift including residual effects of installation. The Specification for Material Testing Services provides current adequate codes and standards for testing of the candidate structural fill materials, and in-situ testing of structural fills as they are placed. Review of the Secondary Containment for RLD Tanks (structural design calculations) shows that the design process appropriately considered all applicable factors for the foundation design.
	The placement, structural support, and type of material used for backfill around and below the Secondary Containment are appropriate.	Drawings listed above under References; 24590-BOF-3PS-CE01-T0001, Rev. 5, Engineering Specification for Excavation and Backfill; 24590-BOF-3PS-C000-T0001, Rev. 3, Engineering Specification for Material Testing Services. 24590-WTP-PER-CON-02-001, Rev. 5, Installation of Tank Systems and Miscellaneous Unit Systems.	The drawings and Specification for Excavation and Backfill provide specific material to be used under and around the secondary containment foundations and contain placing and backfilling requirements. The Material Testing specifications contain current adequate industry standards for selecting and testing fill materials, and testing not less than once each lift to ensure adequate compaction. Requirements for testing and record keeping are current and adequate for the backfill around and below the secondary containment. Furthermore, the certification of construction by an independent inspector as required per the Installation of Tank System document will ensure that all tank system units including secondary containment structural support and backfill placement comply with the applicable documents.

Information Assessed		Source of Information	Assessment
Infiltration	The design or operation (e.g., diking & curbing) prevents run-on or infiltration of precipitation into the Secondary Containment system unless the collection system has sufficient excess capacity (25 yr rainfall) to contain the run-on precipitation.	Drawings listed above under References; 24590-WTP-DB-ENG-01-001, Rev. 1C, Basis of Design; 24590-PTF-DGC-S13T-00035, Rev. A Secondary Containment for RLD Tanks, (including Engineering Calculation Change Notice, ECCN # 24590-PTF-DGE-S13T-00026, to Rev. A).	The Basis of Design document requires that secondary containment structure shall be capable to contain 100% liquid volume of the largest tank in the group of tanks plus the precipitation from a 25-year, 24-hour rainfall event. The Secondary Containment for RLD Tanks (structural design calculations) and the drawings details show that the secondary containment concrete foundation and walls are adequate to contain the required volume of the liquid waste identified above and will prevent infiltration from external run-ons.
	The design includes an external moisture barrier or other means to prevent moisture from entering the cell.	Drawings listed above under References; 24590-WTP-DB-ENG-01-001, Rev. 1C, Basis of Design.	Drawings show that water stops are installed at the intersection of the berm walls and the foundation slab, which will prevent migration of moisture to and from the secondary containment structure. Furthermore, the Basis of Design document (Section 4.7) states that the groundwater table is more than 250 feet below the ground surface. Therefore, external moisture entering the bermed area is of no concern.
Liner System	The containment area is free of cracks or gaps and the design discusses methods of their minimization.	Drawings listed above under References; Bechtel National, Inc. (BNI) CCN # 126217, RLD Tank Secondary Containment Coating Considerations-Response to IQRPE Questions (T Coutts email message to DC Pfluger, dated Nov. 23, 2005, 10:23 AM); 24590-WTP-3PS-AFPS-TP006, Rev. 1, Engineering Specification for Field Applied Special Protective Coatings for Secondary Containment Areas.	The drawings and BNI CCN # 126217 document identify the Special Protective Coating (SPC) for the inside surfaces of Room P-0150 to be an SC-N material coating system designation as described in the Engineering Specification for Field Applied Special Protective Coatings. This specification also provides details addressing the installation of acceptable approved SPC systems. These details address surface preparation, patching and filler materials for cracks and gaps, and application rules for multi-layer coatings. All these details and methods of installation ensure mitigation of cracks and gaps.

	Information Assessed	Source of Information	Assessment
Liner System	The design has considered the compatibility of the concrete liner or coatings and waste and presents information on coatings planning to be used from the manufacturer addressing compatibility with the stored waste. The lining or coating must prevent the waste from migrating into the concrete.	Drawings listed above under References; Bechtel National, Inc. (BNI) CCN # 126217, RLD Tank Secondary Containment Coating Considerations-Response to IQRPE Questions (T Coutts email message to DC Pfluger, dated Nov. 23, 2005, 10:23 AM); 24590-WTP-3PS-AFPS-TP006, Rev. 1, Engineering Specification for Field Applied Special Protective Coatings for Secondary Containment Areas; 24590-WTP-PER-M-02-001, Rev. 3, Material Selections for Building Secondary Containment/Leak Detection; 24590-WTP-PER-J-02-001, Rev. 4, Leak Detection-Sump Level Measurement in Secondary Containment System; 24590-PTF-PER-M-04-0009, Rev. 0, Sump Data for PT Facility Room P-0150; 24590-PTF-3YD-PWD-00001, Rev. 1, System Description for Plant Wash and Disposal System and Radioactive Liquid Waste Disposal System RLD.	The drawings and BNI CCN # 126217 documents identify the Special Protective Coating for the inside surfaces of Room P-0150 to be an SC-N material coating system designation as described in the Engineering Specification for Field Applied Special Protective Coatings document. The Material Selections including the BNI CCN # 126217 document contains adequate and appropriate information on the compatibility of planned secondary containment SPC with the waste. The Engineering Specification for Field Applied Special Protective Coatings provides appropriate selection test criteria used to determine acceptable approved coating systems. The test criteria include chemical resistance endurance requirements and wear abrasion resistance criteria to ensure that the applied SPC system will prevent migration of waste to and protect the secondary containment concrete. Furthermore, the Leak Detection document provides detailed liquid level measurement requirements to monitor any leak directed to and collected in the sump (RLD-SUMP-0003). Specific details of the sump are described in the Sump Data document and as shown on the drawings. The System Description document provides the requirements to monitor the sump level and to pump out any liquid waste within 24 hours of its leak, which also help prevent any migration of waste to the secondary containment concrete.

Bechtel Systems
&
Infrastructure, Inc.

JOB No. 24590

SUPPLIER DOCUMENT STATUS

1. ☒	WORK MAY PROCEED
2. ☐	REVISE AND RESUBMIT. WORK MAY PROCEED SUBJECT TO RESOLUTION OF INDICATED COMMENTS
3. ☐	REVISE AND RESUBMIT. WORK MAY NOT PROCEED
4. ☐	REVIEW NOT REQUIRED. WORK MAY PROCEED.

PERMISSION TO PROCEED DOES NOT CONSTITUTE ACCEPTANCE OR APPROVAL OF DESIGN DETAILS, CALCULATIONS, ANALYSES, TEST METHODS, OR MATERIALS DEVELOPED OR SELECTED BY THE SUPPLIER AND DOES NOT RELIEVE SUPPLIER FROM FULL COMPLIANCE WITH CONTRACTUAL OBLIGATIONS.

	M	P	ML	H	MH	E	C&I	CS&A	PD	PT	ESH
REVIEWED											

G-321 DOCUMENT CATEGORY _____
[From Supplement A to G-321-E (E) or G-321-V (V), as applicable]
RESPONSIBLE ENGINEER _____ DATE 10/1/02

24590-CM-HC4-HXYG-00138-02-01A

SUBCONTRACT SUBMITTAL

10/2/02 10/7/02

☒ Processed/ Data Entry ☒ Copied/ QA ☐ Scanned ☐ Filed

RPP-WTP RECEIVED

SEP 27 2002

BY PDC

10/1/02

RPP-WTP RECEIVED

OCT 01 2002

BY PDC

COGEMA-IA-008, Rev. 1

Best Available Copy

IQRPE REVIEW – PRETREATMENT FACILITY ELEVATION 0' –0" SECONDARY CONTAINMENT

"I, John T. Baxter, have reviewed, and certified a portion of the design of a new tank system or component located at the Hanford Waste Treatment Plant, owned/operated by Department of Energy, Office of River Protection, Richland, Washington. My duties were independent review of the current design for the Pretreatment Facility Elevation 0' –0" Secondary Containment as required by the Dangerous Waste Regulations, namely, WAC 173-303-640(3) (applicable paragraphs (i.e., (a) through (g))."

"I certify under penalty of law that I have personally examined and am familiar with the information submitted in this document and all attachments and that, based on my inquiry of those individuals immediately responsible for obtaining the information, I believe that the information is true, accurate, and complete. I am aware that there are significant penalties for submitting false information, including the possibility of fine and imprisonment."

The documentation reviewed indicate that the design intent fully satisfies the requirements of the WAC.

The attached review is 6 sheets numbered 1 through 6.

JOHN T. BAXTER
STATE OF WASHINGTON
18978
REGISTERED
PROFESSIONAL ENGINEER

EXPIRES: 10/28/04

John T. Baxter

September 30, 2002

Signature Date

01A

24590-CM-HC4-HXVG-00138-02-02 10/1/02

STRUCTURAL INTEGRITY ASSESSMENT OF PRETREATMENT FACILITY ELEVATION 0' –0" SECONDARY CONTAINMENT

COGEMA-IA-008
REV. 1

24590- CM- HC4- HXY6 - 00138 - 02-01A

	Information Assessed	Y/N	Source of Information	Assessment
Scope	Scope of this Integrity Assessment	This integrity assessment addresses Pretreatment Facility Secondary Containments between the elevations of 0'-0" extending upward, but below elevation 28'-0". The specific cells considered in this assessment are: **Elev. 0'-0"** - P-0102, P-0102A, P-0104, P-0105, P-0105A, P-0105B, P-0105C, P-0106, P-0108, P-0108A, P-0108B, P-0108C, P-0109, P-0111, P-0112, P-0113, P-0114, P-0117, P-0117A, P-0118, P-0119, P-0123 and P-0123A. Process Bulges are shown on the drawings; however, integrity assessments for process bulges are included with the ancillary equipment integrity assessments for each process tank and are not part of this assessment.			
	Drawings	The drawings are the general arrangement plan at elevation 0'-0" and associated sections. 24590 PTF P1 P01T P0001, Rev. 0, PRETREATMENT FACILITY GENERAL ARRANGEMENT PLAN AT EL. 0'-0"; 24590 PTF P1 P01T P0007, Rev. 0, PRETREATMENT FACILITY GENERAL ARRANGEMENT SECTION A-A; 24590 PTF P1 P01T P0008, Rev. 0, PRETREATMENT FACILITY GENERAL ARRANGEMENT SECTION B-B; 24590 PTF P1 P01T P0009, Rev. 2, PRETREATMENT FACILITY GENERAL ARRANGEMENT SECTION C-C; 24590 PTF P1 P01T P0010, Rev. 0, PRETREATMENT FACILITY GENERAL ARRANGEMENT SECTION D-D; 24590 PTF P1 P01T P0011, Rev. 0, PRETREATMENT FACILITY GENERAL ARRANGEMENT SECTION E-E; 24590 PTF P1 P01T P0013, Rev. 0, PRETREATMENT FACILITY GENERAL ARRANGEMENT SECT. H-H AND J-J; 24590 PTF P1 P01T P0014, Rev. 2, PRETREATMENT FACILITY GENERAL ARRANGEMENT SECT. L-L AND K-K; 24590 PTF P1 P01T P0015, Rev. 2, PRETREATMENT FACILITY GENERAL ARRANGEMENT SECT. M-M; 24590 PTF P1 P01T P0016, Rev. 0, PRETREATMENT FACILITY GENERAL ARRANGEMENT SECT. P-P AND Q-Q; 24590 PTF P1 P01T P0017, Rev. 0, PRETREATMENT FACILITY GENERAL ARRANGEMENT SECT. R-R			

24590-CM-HC4-HXYG-00138-02-01A

	Information Assessed	Y/N	Source of Information	Assessment
Foundation Design	Description of subsurface conditions and soil bearing capacity are adequate.	Y	24590-BOF-3PS-C000-T0001, Rev. 1, Technical Specification for Material Testing Services; 24590-BOF-3PS-CE01-T0001, Rev. 2, Engineering Specification for Excavation and Backfill; 24590-WTP-DC-ST-01-001, Rev. 0, Structural Design Criteria	The Structural Design Criteria adequately presents design guidance for both mat and spread footings based on the geotechnical site investigation for the facility (H-1616-51, Shannon & Wilson, 2000). Bearing capacity and settlement design parameters are furnished for the dense Hanford Upper and Lower Sand Units and Structural Fill. Use of the loose wind blown (dune) sands for foundations is precluded. The Excavation and Backfill specification provides structural backfill requirements based on the geotechnical report and adequate current codes and standards for selection, placing, and compacting structural backfill including testing of candidate fill materials and completed backfills. The Specification for Material Testing Services provides current adequate codes and standards for testing of candidate structural fill materials and in-situ testing of structural fills as they are constructed. The codes and standards are consistent with those called out in the Excavation and Backfill specification.
	Foundation design loads (including full tanks) and estimated settlement are adequately considered.	Y	24590-WTP-DC-ST-01-001, Rev. 0, Structural Design Criteria	The Structural Design Criteria uses current adequate standards to define design loads and load combinations (ASCE 7-98, ACI 349-01, ACI 349R-01). Dead and Fluid loads are included in these loads and load combinations. Settlement design parameters are included in the Structural Design Criteria subsection on geotechnical parameters and foundation design.
	Design calculation approach and design basis of footings with design standard references (e.g., ACI) are adequate.	Y	24590-WTP-DB-ENG-01-001, Rev. 0, Basis of Design; 24590-WTP-DC-ST-01-001, Rev. 0, Structural Design Criteria	The Structural Design Criteria references current adequate design criteria for the design of concrete foundations and footings. ACI 318-99 is referenced for the strength design of commercial grade structures and ACI 349-01 is referenced for "safety" grade structures.

24590-CM-HC4-HXYG-00138-02-01A

	Information Assessed	Y/N	Source of Information	Assessment
Foundation Design	Foundation material is compatible with the soil.	Y	24590-WTP-DB-ENG-01-001, Rev. 0, Basis of Design; 24590-BOF-3PS-C000-T0001, Rev. 1, Technical Specification for Material Testing Services; 24590-WTP-3PS-DB01-T0001, Rev. 1, Engineering Specification for Furnishing and Delivering Ready-Mix Concrete	"ICD28" in the Basis of Design indicates that aggregate for the foundation concrete will be taken from Pit 30 as described in the ICD. The specification for Furnishing and Delivering Ready-Mix Concrete provides adequate current requirements for the selection of coarse and fine aggregates and the procurement of cementitious materials. Adequate test procedures are provided in the Material Testing Services specification for testing candidate aggregates. Instructions for mixing and delivering Ready-Mix Concrete are adequate and current. As noted in the Basis of Design document (section 4.7), the water table lies about 200 feet below the deepest foundations so there is little reason to expect compatibility problems between the concrete foundations and the site soils.
	Foundation will withstand the effects of frost heave.	Y	24590-WTP-DC-ST-01-001, Rev. 0, Structural Design Criteria	The Structural Design Criteria includes adequate provisions to preclude frost heave in the section addressing Lateral Earth Pressure loads. All foundations are required to extend into the soil more than 30 inches below finish grade. The frost line is 30 inches below finished grade
	Seismic considerations have been adequately addressed.	Y	24590-WTP-DB-ENG-01-001, Rev. 0, Basis of Design; 24590-WTP-DC-ST-01-001, Rev. 0, Structural Design Criteria; RPT-W375-RU00002, Issue 2, TWRS-P Facility Design Basis Earthquake - Peak Ground Acceleration, Seismic Response Spectra, and Seismic Design Approach; RPT-W375-RU00005, Rev B, Seismic Analysis and Design Approach	The Structural Design Criteria provides current adequate codes and standards for the design of the secondary containment structures and their liners. Lateral force design requirements for safety grade structures are consistent with guidance in RPT-W375-RU00005 and RPT-W375-RU00002. Lateral force requirements for commercial grade structures are taken from the Uniform Building Code (1997) which is appropriate. Design codes for safety grade structures are ACI 349-01 and AISC N690-1994 for concrete and steel structures respectively. Design codes for commercial grade structures are ACI-318 for concrete and Allowable Stress Design Method utilizing the Manual of Steel Construction for steel.

24590-CM-HC4-HXYG-00138-02-0A

	Information Assessed	Y/N	Source of Information	Assessment
Compatibility & Strength	The stored waste is compatible with its Secondary Containment and leak detection hardware based on a detailed chemical and physical analysis of the wastes used and other information sources.	Y	24590-WTP-DB-ENG-01-001, Rev. 0, Basis of Design; 24590-WTP-PER-M-02-001, Material Selections for Building Secondary Containment/Leak Detection, Rev. 2; 24590-WTP-PER-CSA-02-001, Rev. 1, Secondary Containment Design; 24590-WTP-PER-J-02-001, Rev. 1, Leak Detection - Sump Level Measurement in Secondary Containment Systems	The Basis of Design states that cells and sumps are appropriately lined and any spills are removed and flushed within 24-hr or as timely as possible. The Material Selection report identifies appropriate materials for Secondary Containment liners, coatings, sumps, and leak detection equipment that are compatible with the expected stored waste. The Secondary Containment Design report provides adequate typical construction details for liners, coatings, sumps, and leak detection equipment to be used for Secondary Containments.
	The design shows that the Secondary Containment has sufficient strength and thickness to prevent failure owing to pressure gradients, static head during a release, physical contact with the waste, climatic conditions, and the stress of daily operations (e.g., vehicular traffic).	Y	24590-WTP-DB-ENG-01-001, Rev. 0, Basis of Design; 24590-WTP-PER-CSA-02-001, Rev. 1, Secondary Containment Design; 24590 PTF P1 P01T P0001, Rev. 0, PRETREATMENT FACILITY GENERAL ARRANGEMENT PLAN AT EL. 0'-0" and the associated Cross-Section drawings	These general requirements are stated as design goals in the Basis of Design document. The explicit design codes and standards, loads and load combinations to be used are stated in the Secondary Containment Design document. These requirements and codes and standards are adequate for the secondary containment design. Since the secondary containments being considered are located in cells inside the Pretreatment Facility rather than directly buried, pressure gradients and vehicular traffic are not applicable load cases.
	The Secondary Containment system has sufficient strength in the presence of operational stresses from site-specific conditions (i.e., traffic, heavy equipment, precipitation, frost).	Y	24590-WTP-DB-ENG-01-001, Rev. 0, Basis of Design; 24590-WTP-PER-CSA-02-001, Rev. 1, Secondary Containment Design; 24590-WTP-3PI-NLLR-00002, Rev. 0, Engineering Specification for Furnishing, Detailing, Fabrication, Delivery and Installation of Stainless Steel Liner Plates	Because the secondary containments being considered are installed inside the Pretreatment Facility, precipitation and frost are not applicable load cases. Secondary Containment Design identifies the applicable load cases (operational stresses) from site specific conditions that must be considered in the design. The procurement subcontract specification for furnishing the liner plates includes specific provisions for protection of completed liners during the construction process. Similar specifications for protection of coatings will be developed during the coating selection process.

24590 -CM- HC4 - HXYG - 00138-02-01A

	Information Assessed	Y/N	Source of Information	Assessment
Foundation Integrity	The Secondary Containment is properly supported by a foundation or base in order to prevent failure from settlement, compression, or uplift, including the residual effects of installation.	Y	24590-WTP-PER-CSA-02-001, Rev. 0, Secondary Containment Design; 24590-WTP-DC-ST-01-001, Rev. 0, Structural Design Criteria; 24590 PTF P1 P01T P0001, Rev. 0, PRETREATMENT FACILITY GENERAL ARRANGEMENT PLAN AT EL. 0'-0" and the associated Cross-Section drawings	These conditions are fully addressed in the reference design criteria documents. The design requirements and codes and standards specified are adequate to satisfy these requirements. The general arrangement plan drawing for elevation 0'-0" and the associated cross-sections provide an adequate description of the secondary containments.
	The placement, structural support, and type of material used for backfill around and below the Secondary Containment are appropriate.	Y	24590-BOF-3PS-CE01-T0001, Rev. 2, Engineering Specification for Excavation and Backfill; 24590-BOF-3PS-C000-T0001, Rev. 1, Technical Specification for Material Testing Services	The Excavation and Backfill and Material Testing specifications contain current adequate industry standards for selecting and testing fill materials, placing and compacting backfills, and testing not less than once each lift to assure adequate compaction. Requirements for testing and record keeping are current and adequate for both safety grade fills and commercial grade fills.
	The design or operation (e.g., diking & curbing) prevents run-on or infiltration of precipitation into the Secondary Containment system unless the collection system has sufficient excess capacity (25 yr rainfall) to contain the run-on precipitation.	Y	24590-WTP-DB-ENG-01-001, Rev. 0 Basis of Design; 24590 PTF P1 P01T P0001, Rev. 0, PRETREATMENT FACILITY GENERAL ARRANGEMENT PLAN AT EL. 0'-0" and the associated Cross-Section drawings	This requirement is specified in the Environmental section of the Basis of Design document. In addition, all secondary containments being reviewed are located inside the Pretreatment Facility as shown in the drawings.

24590-CM-HC4-HXY6-00135-02-01A

	Information Assessed	Y/N	Source of Information	Assessment
Liner System	The design includes an external moisture barrier or other means to prevent moisture from entering the cell.	Y	24590-WTP-DB-ENG-01-001, Rev. 0, Basis of Design; Drawing No. 24590 PTF P1 P01T P0001, Rev. 0, PRETREATMENT FACILITY GENERAL ARRANGEMENT PLAN AT EL. 0'-0" and the associated Cross-Section drawings	The Secondary Containments shown in the general arrangement plan at elevation (-) 0'-0" are inside the Pretreatment Facility building which shields them from surface water percolation. The ground water table is located about 200 feet below the floors of the cells at elevation 0'-0" as noted in the Basis of Design.
	The containment area is free of cracks or gaps and the design discusses methods of their minimization.	Y	24590-WTP-3PS-NLLR-T0002, Rev. 0, Engineering Specification for Furnishing, Detailing, Fabrication, Delivery and Installation of Stainless Steel Liner Plates; 24590-WTP-3PS-SS00-T0002, Rev. 1, Specification for Welding of Structural Stainless Steel and Welding of Structural Carbon Steel to Structural Stainless Steel ; 24590-WTP-PER-CSA-02-001, Rev. 1, Secondary Containment Design	The Secondary Containment Design documentation provides current adequate requirements and codes and standards to provide leak tight stainless steel liners for secondary containment. Construction processes are adequately described and appropriate for installation of the liners. Standard details are shown in Secondary Containment Design. The Secondary Containment Design Report (CSA-02-001) includes appropriate details for installation of protective coatings free of cracks and gaps.
	The design has considered the compatibility of the concrete liner or coatings and waste and presents information on coatings planning to be used from the manufacturer addressing compatibility with the stored waste. The lining or coating must prevent the waste from migrating into the concrete.	Y	24590-WTP-PER-M-02-001, Rev. 2, Material Selections for Building Secondary Containment/Leak Detection; 24590-WTP-PER-CSA-02-001, Rev. 1, Secondary Containment Design; Drawing No. 24590 PTF P1 P01T P0001, Rev. 0, PRETREATMENT FACILITY GENERAL ARRANGEMENT PLAN AT EL. 0'-0" and the associated Cross-Section drawings	The Material Selection Study contains general information on the compatibility of planned stainless steel liners and protective coatings with the secondary containment concrete. The general arrangement drawing for the Pretreatment Facility and the associated cross-sections show the cells where secondary containments will be used and the locations of the sumps.

24590-CM-HCH-HXYG-00135-02-01A

RECEIVED
OCT 01 2002
BNI-Subcontracts

COGEMA ENGINEERING

September 30, 2002

COGEMA-02-0402

T. A. O'Toole
Bechtel National, Inc. MS9-B
Waste Treatment Plant
3000 George Washington Way
Richland, Washington 99352

RPP-WTP
RECEIVED
SEP 27 2002
BY PDC

Dear Ms. O'Toole:

STRUCTURAL INTEGRITY ASSESSMENT OF THE PRETREATMENT FACILITY ELEVATION 0' –0" SECONDARY CONTAINMENT – INTEGRITY ASSESSMENT, REVISION 1

The integrity assessment has been completed per the contract requirements and is attached for your use. This assessment incorporates the comments received from Bechtel on September 18, 2002. The assessment found the design intent sufficient to ensure the foundation and secondary containment will be adequately designed and that the foundation and secondary containment will have sufficient structural strength, compatibility with the waste(s) to be stored or treated, and corrosion protection to ensure that it will not collapse, rupture, or fail.

If you have any questions, please contact me at (509) 376-5445, or via facsimile at (509) 372-0504.

Sincerely,

RPP-WTP
RECEIVED
OCT 01 2002
BY PDC

K. V. Scott, Manager
Facilities, Structures & Components

kld

Attachment

cc: D. C. Pfluger MS4-E2 w/ attachment

24590-CM-HC4-HXY6-00138-02-01A

2425 Stevens Center Place, Second Floor, Richland, Washington 99352 Tel: (509) 372-3572 - Fax: (509) 372-3169
COGEMA Engineering Corporation

MASTER DISTRIBUTION SCHEDULE

Project Name: RPP-WTP

Document Distribution: 24590-CM-HC4-HXYG-00138 -02-01A

Document Number: **Revision:**

Insert rows as necessary ↑

Name	MSIN	Controlled	Uncontrolled	Size				Comments
				8 ½ x 11	11 x 17	Full	As Is	
Dan Pfluger	MS4-E2							LEAD REVIEWER
Brad Erlundson								Reviewer
Trisha O'Toole								Info

Insert rows as necessary ↑

DAN PFLUGER
Approver's Name (Print)

Approver's Signature

8/27/2002
Date

Job No. 24590

Bechtel National, Inc.

SUPPLIER DOCUMENT STATUS

1. **Work may proceed.**
2. **Revise and resubmit. Work may proceed subject to resolution of indicated comments.**
3. **Revise and resubmit. Work may not proceed.**
4. **Review not required. Work may proceed.**

Permission to proceed does not constitute acceptance or approval of design details, calculations, analyses, test methods, or materials developed or selected by the supplier and does not relieve supplier from full compliance with contractual obligations.

REVIEWED										EGNS

G-321 Document Category N/A
[From Supplement A to G-321 (E) or G-321-V (V), as applicable, or "N/A" if SSRS is used]

Supersedes BNI Document No. N/A Rev. _____
[When applicable]

Accepted by Dan Pfluger (Print Name) DC Pfluger (Signature) 9/3/03 (Date)

Released by _____ (Print Name) _____ (Signature) _____ (Date)
[When applicable]

416 GP&S 6-03

24590-CM-HC4-HXYG-00138-02-02
REV. 00A

SUBCONTRACT SUBMITTAL

(B) 9/3/03 ☒ Processed/Data Entry ☐ Copied/QA ☐ Scanned ☐ Filed

(A) KJ 9/3/03

(C) Sump 9/5/03

R10121217

COGEMA ENGINEERING

COGEMA-IA-019, Rev. 1

RPP-WTP RECEIVED
SEP 02 2003
BY PDC

IQRPE REVIEW – PRETREATMENT FACILITY WASTE FEED RECEIPT SYSTEM (FRP) ANCILLARY EQUIPMENT, REV. 1

"I, John T. Baxter, have reviewed, and certified a portion of the design of a new tank system or component located at the Hanford Waste Treatment Plant, owned/operated by Department of Energy, Office of River Protection, Richland, Washington. My duties were independent review of the current design for the Pretreatment Facility Waste Feed Receipt System (FRP) Ancillary Equipment as required by the Dangerous Waste Regulations, namely, WAC 173-303-640(3) applicable paragraphs, i.e., (a) through (g)."

"I certify under penalty of law that I have personally examined and am familiar with the information submitted in this document and all attachments and that, based on my inquiry of those individuals immediately responsible for obtaining the information, I believe that the information is true, accurate, and complete. I am aware that there are significant penalties for submitting false information, including the possibility of fine and imprisonment."

The documentation reviewed indicate that the design intent fully satisfies the requirements of the WAC.

The attached review is eight (8) sheets numbered one (1) through eight (8).

JOHN T. BAXTER
STATE OF WASHINGTON
18978
REGISTERED
PROFESSIONAL ENGINEER

EXPIRES: 10/28/04

John T. Baxter
Signature

09/02/2003
Date

9-3-03

File Processed/ Data Entry | Copied/ QA | Scanned | Filed

-HC4-
24590-CM-HXYG-00138-02-02, REV. 00A

@ SJ 9/3/03
© 9/3/03

STRUCTURAL INTEGRITY ASSESSMENT OF THE PRETREATMENT FACILITY WASTE FEED RECEIPT SYSTEM (FRP) ANCILLARY EQUIPMENT

COGEMA-IA-019
REV. 1

Please note that source, special nuclear and byproduct materials, as defined in the Atomic Energy Act of 1954 (AEA), are regulated at the U.S. Department of Energy (DOE) facilities exclusively by DOE acting pursuant to its AEA authority. DOE asserts, that pursuant to the AEA, it has sole and exclusive responsibility and authority to regulate source, special nuclear, and byproduct materials at DOE-owned nuclear facilities. Information contained herein on radionuclides is provided for process description purposes only.

2d2

Scope	Scope of this Integrity Assessment	This Integrity Assessment addresses ancillary equipment for the Pretreatment Facility (PTF) Waste Feed Receipt (FRP) Process System Vessels. The FRP vessels (FRP-VSL-00002A/B/C/D) and ancillary equipment are located in a central hot cell, inaccessible process cells, and surrounding R3/C3 areas in the Pretreatment Facility. Ancillary equipment located inside the FRP system vessels is addressed separately in the Integrity Assessment for the vessels. Direct buried coaxial transfer lines located outside the Pretreatment Facility are outside the scope of this Integrity Assessment.
	Drawings	24590-PTF-M5-V17T-P0003, Rev. 0, Process Flow Diagram Waste Feed Receipt System FRP; 24590-PTF-M6-FRP-P0001, Rev. 0, P&ID - PTF Waste Feed Receipt Vessels FRP-VSL-00002B (Q); 24590-PTF-M6-FRP-P0002, Rev. 0, P&ID - PTF Waste Feed Receipt Vessels FRP-VSL-00002C and FRP-VSL-00002D (Q); 24590-PTF-M6-FRP-P0003, Rev. 0, P&ID - PTF Waste Feed Receipt Process System FRP-PMP-00001 and FRP-PMP-00002A (Q); 24590-PTF-M6-FRP-P0005, Rev. 0, P&ID - PTF Waste Feed Receipt Utility Systems - PSA Rack (Q); 24590-PTF-M6-FRP-P0006, Rev. 0, P&ID - PTF Waste Feed Receipt Utility Systems - PSA Rack (Q); 24590-PTF-M6-FRP-P0007, Rev. 0, P&ID - PTF Waste Feed Receipt Utility Systems - PSA Rack (Q); 24590-PTF-M6-FRP-P0008, Rev. 0, P&ID - PTF Waste Feed Receipt Utility Systems - PSA Rack (Q); 24590-PTF-M6-FRP-P0009, Rev. 0, P&ID - PTF Waste Feed Receipt Utility Systems Plant Wash Rack; 24590-PTF-M6-FRP-P0010, Rev. 0, P&ID - PTF Waste Feed Receipt Utility Systems - Plant Wash Rack

Summary of Assessment

For each item of "Information Assessed" (i.e., Criteria) on the following pages, the items listed under "Source of Information" were reviewed and found to furnish adequate design controls and requirements to assure the design intent fully satisfies the WAC requirements.

	Information Assessed	Source of Information	Discussion
Design	Ancillary equipment design standards are appropriate and adequate for the equipment's intended use.	24590-WTP-DC-PS-01-001, Rev 1, Pipe Stress Design Criteria; 24590-WTP-DC-PS-01-002, Rev 1, Pipe Support Design Criteria; 24590-PTF-3YD-FRP-00001, Rev 0, System Description for Waste Feed Receipt Process (FRP); Drawings listed above under Scope; ASME B31.3 Code, Process Piping, 1996 Edition, American Society of Mechanical Engineers; ASME Boiler and Pressure Vessel Code, Section III, Division 1, Subsection NC, Appendix N and Appendix F, 1995 Edition; American Society of Mechanical Engineers; Uniform Building Code (UBC), 1997, International Conference of Building Officials, Whittier, California	The Pipe Stress Design Criteria identifies ASME B31.3 as the design code for piping systems of the WTP. Ancillary equipment that performs a safety function during an earthquake and ancillary equipment that that must not fail during an earthquake are classified as Seismic Category (SC-I) and Seismic Category (SC-II) respectively. Elements of the ASME B&PV Code, Section III, Subsection NC, Appendix N and Appendix F, are used to supplement the design rules of ASME B31.3 Code for seismic design analysis of SC-I and SC-II piping. Ancillary equipment important to safety without a seismic safety function is classified as Seismic Category (SC-III). The UBC is used to supplement the requirements of ASME B31.3 for seismic design analysis of Seismic Category SC-III/IV ancillary equipment. Table 1 in the Pipe Stress Design Criteria document describes the seismic categories for piping, applicable design codes and analysis methods, seismic loads, and design acceptance criteria. The codes and standards identified in Table 1 are appropriate for design of piping containing mixed waste over the range of conditions identified for the FRP system.
	If the ancillary equipment to be used is not built to a design standard, the design calculations demonstrate sound engineering principles of construction.	24590-WTP-DC-PS-01-001, Rev 1, Pipe Stress Design Criteria; 24590-WTP-DC-PS-01-002, Rev 1, Pipe Support Design Criteria.	The ancillary equipment is built to designs based on the ASME B31.3 Process Piping code supplemented by ASME B&PV Code, Section III as identified in the Pipe Stress Design Criteria. The piping supports are designed using load ratings for component standard type pipe supports and are otherwise designed using allowable stress limits from ASME B&PV Code, Section III.

	Information Assessed	Source of Information	Discussion
Design	Ancillary equipment has adequate strength at the end of its design life to withstand the operating pressure, operating temperature, thermal expansion, and seismic loads. Equipment is protected against physical damage and excessive stress due to settlement, vibration, expansion, or contraction.	24590-WTP-DC-PS-01-001, Rev 1, Pipe Stress Design Criteria; 24590-WTP-PER-M-02-002, Rev 0, Materials for Ancillary Equipment; 24590-PTF-3YD-FRP-00001, Rev 0, System Description for Waste Feed Receipt Process (FRP); 24590-WTP-DB-ENG-01-001, Rev 0, Basis of Design.	The Pipe Stress Design Criteria requires the use of the ASME B31.3 code for piping design. ASME B31.3 requires explicit consideration of operating pressure, operating temperature, thermal expansion/contraction, settlement, vibration, and corrosion allowance in the design of piping. Selected elements of the ASME B&PV Code, Section III are specified to provide appropriate seismic design requirements to supplement the provisions of ASME B31.3. The Basis of Design document specifies that mechanical equipment is to be designed for a nominal plant life of 40 years. Components in non-maintainable areas are to be designed to last the entire design life of the plant. Detailed materials selection (corrosion) evaluations are conducted for each vessel in the PTF facility during process design to assure a 40 year service life. The Materials for Ancillary Equipment document uses a conservative design approach specifying that ancillary equipment downstream of a waste source vessel is to be constructed of the same or better material and with the same corrosion allowance as the source vessel itself. Since the vessels all have detailed corrosion analyses, using the same or better materials for downstream piping ensures that the material will be appropriate for the wastes for the entire design life. If the material for the ancillary equipment is to be different from the source vessel, a supplementary corrosion analysis by the materials group is required (Materials for Ancillary Equipment).

	Information Assessed	Source of Information	Discussion
Supports	Ancillary equipment supports are adequately designed.	24590-WTP-DC-PS-01-002, Rev 1, Pipe Support Design Criteria; ASME Boiler and Pressure Vessel Code, Section III, Division 1, Subsection NF, and Appendix F, 1995 Edition; 24590-WTP-PL-PS-01-001, Rev 1, Verification and Validation Test Plan for Bechtel's ME150 Pipe Support Family of Programs (PCFAPPS); 24590-WTP-VV-PS-01-001, Rev 1, Verification and Validation Report for ME101, Linear Elastic Analysis of Piping Version N6	The Pipe Support Design Criteria considers all loadings identified in ASME B31.3 and utilizes ASME B&PV Code, Section III, Division 1, Subsection NF and Appendix F, to supplement the requirements of ASME B31.3 for seismic design of Seismic Category SC-I/II and SC-III/IV pipe supports. Bounding load cases are passed to the pipe support designers from the results of the ancillary equipment piping stress analyses. Details of the seismic design methodology are discussed in the Pipe Support Design Criteria document. Analysis is by manual calculation or approved computer programs that have been verified and validated. These are appropriate codes and standards for design of ancillary equipment supports for a mixed waste piping system over the range of conditions identified for the FRP system. Ancillary equipment supports are to be designed to allow a minimum of heat to be transferred to the building structures (building structures not to exceed 150 deg F for concrete and 200 deg F for steel). Design standards for vessel internal equipment supports are discussed in the integrity assessment for the FRP system tanks.
Connections	Seams and connections are adequately designed.	24590-WTP-DB-ENG-01-001, Rev 0, Basis of Design; 24590-WTP-DC-PS-01-001, Rev. 1, Pipe Stress Design Criteria.	The Basis of Design states that hot cell, inaccessible process cell, and service piping connections will be designed to minimize the potential for liquid waste leakage or seepage when disconnected. It also specifies that in-cell pipework that is non-maintainable will be fully welded. The Pipe Stress Design Criteria document specifies the ASME B31.3 Process Piping design code for the piping systems. Welding is to be performed in accordance with the requirements of ASME B31.3 and the ASME B&PV Code, Section IX. ANSI B16.5 is specified for flange designs. These are appropriate codes and standards for design and fabrication of the aqueous mixed waste FRP ancillary equipment.

	Information Assessed	Source of Information	Discussion
Supports	The system will withstand the effects of frost heave.	24590-PTF-3YD-FRP-00001, Rev 0, System Description for Waste Feed Receipt Process (FRP); 24590-WTP-DC-ST-01-001, Rev. 1, Structural Design Criteria	The FRP system ancillary equipment considered in this assessment is located inside the Pretreatment Facility. The Structural Design Criteria requires that all structural foundations shall extend into the surrounding soil below the frost line to preclude frost heave. The frost line is 30 in. below grade. Therefore the ancillary equipment is not subject to the effects of frost heave.
Waste Characteristics	Characteristics of the waste to be stored or treated have been identified (ignitable, reactive, toxic, specific gravity, vapor pressure, flash point, temperature)	24590-WTP-PSAR-ESH-01-002-02, Rev. 0, Preliminary Safety Analysis Report to Support Construction Authorization; PT Facility Specific Information; 24590-PTF-3YD-FRP-00001, Rev 0, System Description for Waste Feed Receipt Process (FRP); 24590-WTP-PER-PL-02-001, Rev. 2, Piping Material Class Description; 24590-WTP-3PS-PF00-T0001, Rev. 1, Engineering Specification for Jumper Fabrication for PT and HLW	The FRP System Description states that the primary functions of the FRP system are to receive LAW waste feed through the transfer pipelines, provide lag storage for the waste feed, and to pump feed to different processes in the Pretreatment Facility. These system tanks can also receive, store and transfer HLW waste feed, treated LAW concentrate, and other recycle streams. Waste received must have a storage temperature below 120 °F with a solids concentration below 5 wt%. The ancillary equipment considered in this assessment will handle wastes with the same characteristics as do the source vessels. Operating pressures for ancillary equipment will be different from those of the vessels. Enveloping pressures and temperatures are reflected in the Piping Material Class assigned to each pipe run. The Preliminary Safety Analysis Report (PSAR) provides a summary of potential hazardous conditions associated with each Pretreatment Facility vessel and the design provisions that are to be used to provide adequate control of each hazard. Design provisions for control of these hazards are listed in the PSAR. For example, the Pretreatment Vessel Vent Process System provides flammable gas dilution and control in the FRP tank head spaces and ancillary equipment. A facility wide grounding system is furnished to control ignition sources in these same tanks and ancillary equipment.

	Information Assessed	Source of Information	Discussion
Waste Char.	Ancillary equipment is designed to handle the wastes with the characteristics defined above and any treatment reagents.	24590-WTP-PER-M-02-002, Rev 0, Materials for Ancillary Equipment.	As noted in the adjacent entry above, source vessels are designed to store the waste and treatment reagents (if any) that they receive. The ancillary equipment materials that contact the waste are to be equal to or better than those of the upstream source vessels.
Compatibility	The pH range of the waste, waste temperature and the corrosion behavior of the structural materials are adequately addressed. Ancillary equipment material and protective coatings ensure the ancillary equipment structure is adequately protected from the corrosive effects of the waste stream and external environments. The protection is sufficient to ensure the equipment will not leak or fail for the design life of the system.	24590-PTF-3YD-FRP-00001, Rev 0, System Description for Waste Feed Receipt Process (FRP); 24590-WTP-PER-M-02-002, Rev 0, Materials for Ancillary Equipment; 24590-WTP-3PS-NN00-T0001, Rev 0, Engineering Specification for Hot and Anti-Sweat Thermal Insulation	The Basis of Design identifies a service design life of 40 years for the ancillary equipment. All non-maintainable items will be designed to last the life of the facility. Detailed materials selection (corrosion) evaluations are conducted for each vessel in the PTF facility during process design to assure a 40 year service life. The Materials for Ancillary Equipment document requires that the material selection and corrosion/erosion allowances for ancillary equipment in contact with the waste will be equal to or better than the material and corrosion allowance of the waste source vessel. The Thermal Insulation specification requires that all insulating materials used on the outside of ancillary equipment be pre-approved for use on austenitic stainless steel in accordance with applicable ASTM procedures and tests to preclude external corrosion of the ancillary equipment. Therefore, the ancillary equipment will provide the expected design service life.

	Information Assessed	Source of Information	Discussion
Corrosion Allowance	Corrosion allowance is adequate for the intended service life of the ancillary equipment.	24590-PTF-3YD-FRP-00001, Rev 0, System Description for Waste Feed Receipt Process (FRP); 24590-WTP-PER-M-02-002, Rev 0, Materials for Ancillary Equipment; 24590-WTP-DC-PS-01-001, Rev. 1, Pipe Stress Design Criteria; 24590-WTP-PER-PL-02-001, Rev. 2, Piping Material Class Description	ASME B31.3 is the code for the WTP piping. Consideration of corrosion, including corrosion allowance, is a mandatory requirement of ASME B31.3. A required service life of 40 years is identified in the Basis of Design for ancillary equipment located in inaccessible process cells. Detailed materials selection (corrosion) evaluations are conducted for each vessel in the PTF facility during process design to assure a 40 year service life. The Materials for Ancillary Equipment document requires that downstream ancillary equipment is to be constructed of equal or better materials, and with the same corrosion allowance as the source vessel. Corrosion/Erosion allowances are listed for each Piping Material Class in the Piping Material Class Description document.
Strength	Pressure controls (vents and relief valves) are adequately designed to ensure pressure relief if normal operating pressures in the vessels are exceeded.	24590-WTP-DC-PS-01-001, Rev. 1, Pipe Stress Design Criteria.	Pressure controls related to the FRP vessels themselves are discussed in their structural integrity assessments. ASME B31.3 is the design code for the WTP piping. ASME B31.3 requires provision be made to safely contain or relieve any pressure to which the piping may be subjected. ASME B31.3 piping not protected by a pressure relieving device, or that can be isolated from a pressure reliving device must be designed for at least the highest pressure that can be developed in the piping system.
	Maximum flows and any unusual operating stresses are identified	Drawings listed above under Scope; 24590-WTP-DC-PS-01-001, Rev 1, Pipe Stress Design Criteria	The expected flow paths for the ancillary equipment are identified on the P&ID drawings. The Pipe Stress Design Criteria specifies the ASME B31.3 code for piping design. This code requires piping to be designed to the highest pressure that can be developed in a piping system while assuring that maximum operating stresses remain within code allowables.

	Information Assessed	Source of Information	Discussion
Secondary Containment	Ancillary equipment is designed with secondary containment that is constructed of materials compatible with the waste and of sufficient strength to prevent failure (pressure gradients, waste, climatic conditions, daily operations), provided with a leak-detection system, and designed to drain and remove liquids.	24590-PTF-3YD-FRP-00001, Rev 0, System Description for Waste Feed Receipt Process (FRP); 24590-WTP-DB-ENG-01-001, Rev 0, Basis of Design.	The ancillary equipment considered in this assessment is located in a central hot cell, process cells and surrounding R3/C3 areas within the Pretreatment facility. Secondary containment for ancillary equipment within the cells is provided by the liners and sumps within the cells which are outside the scope of this integrity assessment. Secondary containment in the R3/C3 areas is provided by special protective coatings, curbs and regulated drain systems which are also outside the scope of this integrity assessment. All secondary containments will be provided with drains and leak detection systems for the detection of primary containment leaks as discussed in the Basis of Design document.

COGEMA ENGINEERING

RECEIVED
SEP 0 2 2003
BNI-Subcontracts

September 2, 2003

COGEMA-03-0266

Daisy J. Whiting
Bechtel National, Inc.
Waste Treatment Plant
2435 Stevens Center
Richland, Washington 99352

Dear Ms. Whiting:

STRUCTURAL INTEGRITY ASSESSMENT OF THE PRETREATMENT FACILITY WASTE FEED RECEIPT SYSTEM (FRP) ANCILLARY EQUIPMENT, REV. 1

The integrity assessment has been completed per the contract requirements and is attached for your use. The assessment found the design intent is sufficient to ensure the ancillary equipment will be adequately designed and that the ancillary equipment will have sufficient structural strength, compatibility with the waste(s) to be stored or treated, and corrosion protection to ensure that they will not collapse, rupture, or fail.

If you have any questions, please contact me at (509) 376-5445, or via facsimile at (509) 372-0504.

Sincerely,

K. V. Scott, Manager
Facilities, Structures & Components

jb

Attachment

cc: D. C. Pfluger MS4-E2 w/ attachment

2425 Stevens Center Place, Second Floor, Richland, Washington 99352 Tel: (509) 372-3572 - Fax: (509) 372-3169
COGEMA Engineering Corporation

Job No. 24590

Bechtel National, Inc.

SUPPLIER DOCUMENT STATUS

1. [X] **Work may proceed.**
2. [ ] **Revise and resubmit. Work may proceed subject to resolution of indicated comments.**
3. [ ] **Revise and resubmit. Work may not proceed.**
4. [ ] **Review not required. Work may proceed.**

Permission to proceed does not constitute acceptance or approval of design details, calculations, analyses, test methods, or materials developed or selected by the supplier and does not relieve supplier from full compliance with contractual obligations.

REVIEWED										E+NS

G-321 Document Category N/A
[From Supplement A to G-321-E (E) or G-321-V (V), as applicable, or "N/A" if SSRS is used]

Supersedes BNI Document No. N/A Rev. _____
[When applicable]

Accepted by DC Pfluger (Print Name) DC Pfluger (Signature) 7/28/04 (Date)

Released by N/A (Print Name) _____ (Signature) _____ (Date)
[When applicable]

416 GP&S 7-03

24590-CM-HC4-HXYG-00138-02-03
REV. 00B

SUBCONTRACT SUBMITTAL

Best Available Copy

R10341821

COGEMA-IA-020, Rev. 2

IQRPE REVIEW -
PRETREATMENT FACILITY (PTF) WASTE FEED RECEIPT PROCESS VESSELS FRP-VSL-00002A, -00002B, -00002C & -00002D, REV. 2

"I, John T. Baxter have reviewed, and certified a portion of the design of a new tank system or component located at the Hanford Waste Treatment Plant, owned/operated by Department of Energy, Office of River Protection, Richland, Washington. My duties were independent review of the current design for the Pretreatment Facility (PTF) Waste Feed Receipt Process Vessels FRP-VSL-00002A, -00002B, -00002C & -00002D as required by The Dangerous Waste Regulations, namely, WAC 173-303-640(3) applicable paragraphs, i.e., (a) through (g)."

"I certify under penalty of law that I have personally examined and am familiar with the information submitted in this document and all attachments and that, based on my inquiry of those individuals immediately responsible for obtaining the information, I believe that the information is true, accurate, and complete. I am aware that there are significant penalties for submitting false information, including the possibility of fine and imprisonment."

The documentation reviewed indicates that the design intent fully satisfies the requirements of the WAC.

The attached review is eight (8) pages numbered one (1) through eight (8).

07/28/04

JOHN T. BAXTER
STATE OF WASHINGTON
18978
REGISTERED
PROFESSIONAL ENGINEER

EXPIRES: 10/28/2004

7-28-04

24590-CM-HC4-HXYG-00138-02-~~00039 REV. 00A~~ 03, REV. 00B

John T. Baxter
Signature

07/28/2004
Date

STRUCTURAL INTEGRITY ASSESSMENT OF THE PRETREATMENT FACILITY (PTF) WASTE FEED RECEIPT PROCESS VESSELS FRP-VSL-00002A, -00002B, -00002C & -00002D

COGEMA-IA-020
Rev. 2

Please note that source, special nuclear and byproduct materials, as defined in the Atomic Energy Act of 1954 (AEA), are regulated at the U.S. Department of Energy (DOE) facilities exclusively by DOE acting pursuant to its AEA authority. DOE asserts, that pursuant to the AEA, it has sole and exclusive responsibility and authority to regulate source, special nuclear, and byproduct materials at DOE-owned nuclear facilities. Information contained herein on radionuclides is provided for process description purposes only.

Scope	Scope of this Integrity Assessment	This integrity assessment includes: The four Waste Feed Receipt Process Vessels; FRP-VSL-00002A, FRP-VSL-00002B, FRP-VSL-00002C and FRP-VSL-00002D which are located in inaccessible process cells in the Pretreatment Facility.
References	Drawings, Mechanical Data Sheets, Subcontracts and Change Notices	24590-PTF-M2-FRP-00001, Rev. 2, Equipment Assembly Waste Feed Receipt Vessel (FRP-VSL-00002A); 24590-PTF-M2-FRP-00002, Rev. 2, Equipment Assembly Waste Feed Receipt Vessel (FRP-VSL-00002B); 24590-PTF-M2-FRP-00003, Rev. 2, Equipment Assembly Waste Feed Receipt Vessel (FRP-VSL-00002C); 24590-PTF-M2-FRP-00004, Rev. 2, Equipment Assembly Waste Feed Receipt Vessel (FRP-VSL-00002D); Drawing Change Notice (DCN) No. 24590-PTF-M2N-FRP-00005 to Drawing No. 24590-PTF-M2-FRP-00001, Rev. 2, Equipment Assembly Waste Feed Receipt Vessel FRP-VSL-00002A; Drawing Change Notice (DCN) No. 24590-PTF-M2N-FRP-00013 to Drawing No. 24590-PTF-M2-FRP-00001, Rev. 2, Equipment Assembly Waste Feed Receipt Vessel FRP-VSL-00002A; Drawing Change Notice (DCN) No. 24590-PTF-M2N-FRP-00006 to Drawing No. 24590-PTF-M2-FRP-00002, Rev. 2, Equipment Assembly Waste Feed Receipt Vessel FRP-VSL-00002B; Drawing Change Notice (DCN) No. 24590-PTF-M2N-FRP-00014 to Drawing No. 24590-PTF-M2-FRP-00002, Rev. 2, Equipment Assembly Waste Feed Receipt Vessel FRP-VSL-00002B; Drawing Change Notice (DCN) No. 24590-PTF-M2N-FRP-00007 to Drawing No. 24590-PTF-M2-FRP-00003, Rev. 2, Equipment Assembly Waste Feed Receipt Vessel FRP-VSL-00002C; Drawing Change Notice (DCN) No. 24590-PTF-M2N-FRP-00015 to Drawing No. 24590-PTF-M2-FRP-00003, Rev. 2, Equipment Assembly Waste Feed Receipt Vessel FRP-VSL-00002C; Drawing Change Notice (DCN) No. 24590-PTF-M2N-FRP-00008 to Drawing No. 24590-PTF-M2-FRP-00004, Rev. 2, Equipment Assembly Waste Feed Receipt Vessel FRP-VSL-00002D; Drawing Change Notice (DCN) No. 24590-PTF-M2N-FRP-00016 to Drawing No. 24590-PTF-M2-FRP-00004, Rev. 2, Equipment Assembly Waste Feed Receipt Vessel FRP-VSL-00002D; 24590-WTP-MV-M59T-00004, Rev. 2, Pulse Jet Mixers Standard Details; Mechanical Data Sheet: Vessel, 24590-PTF-MVD-FRP-00005, Rev. 9, FRP-VSL-00002-A, Waste Feed Receipt Vessel; Mechanical Data Sheet: Vessel, 24590-PTF-MVD-FRP-00006, Rev. 9, FRP-VSL-00002-B, Waste Feed Receipt Vessel; Mechanical Data Sheet: Vessel, 24590-PTF-MVD-FRP-00007, Rev. 9, FRP-VSL-00002-C, Waste Feed Receipt Vessel; Mechanical Data Sheet: Vessel, 24590-PTF-MVD-FRP-00008, Rev. 9, FRP-VSL-00002-D, Waste Feed Receipt Vessel; Document No. 24590-WTP-3PS-MV00-T0001, Rev. 1, Pressure Vessel Design and Fabrication;

References	Change Notices, Subcontract Documentation and Submittals (Calculations)	Specification Change Notice (SCN) No. 24590-WTP-3PN-MV00-00009 to 24590-WTP-3PS-MV00-T0001, Rev. 1, Engineering Specification for Pressure Vessel Design and Fabrication; Subcontract No. 24590-QL-SRA-MTF5-00001, Rev. 4 (July 19, 2004), Waste Feed Receipt Vessels (4-Pack & SS liner), including Exhibit "E" Technical Specifications, Rev. 3; CBI Design Submittals: 24590-QL-SRA-MTF5-00001-31-01, Rev. 00E, SECTION "S" Source for design information for the Waste Feed Receipt Vessels and PJM vessels; 24590-QL-SRA-MTF5-00001-01-02, Rev. 00F, Waste Feed Receipt Vessels FRP-VSL-00002A to -00002D, Design Calculations; 24590-QL-SRA-MTF5-00001-06-31, Rev. 00C, Seismic Analysis of Waste Feed Receipt Vessel; 24590-QL-SRA-MTF5-00001-06-32, Rev. 00A, Waste Feed Receipt Vessels Wash Ring Structural Design; 24590-QL-SRA-MTF5-00001-01-01, Rev. 00D, Pulse Jet Mixers Vessels FRP-PJM-0001-36 & 61-72; 24590-QL-SRA-MTF5-00001-30-01, Rev. 00D, Pulse Jet Mixers Structural Steel Supports Vessel No: FRP-VSL-00002A to 00002D; 24590-QL-SRA-MTF5-00001-30-02, Rev. 00C, Pulse Jet Mixers Structural Steel Supports: Attachment A Input for RISA Analysis; 24590-QL-SRA-MTF5-00001-30-03, Rev. 00C, Pulse Jet Mixers Structural Steel Supports: Attachment B Output of RISA Analysis; 24590-QL-SRA-MTF5-00001-30-04, Rev. 00C, Pulse Jet Mixers Structural Steel Supports: Attachment C Single Angle Design According to AISC, ASD 9th Ed.; 24590-QL-SRA-MTF5-00001-30-06, Rev. 00C, Pulse Jet Mixers Structural Steel Supports: Attachment E Shell of Revolution PJM Ring Stress Analysis E0781A; 24590-QL-SRA-MTF5-00001-30-07, Rev. 00C, Pulse Jet Mixers Structural Steel Supports: Attachment F Structural Support Connection Design; 24590-QL-SRA-MTF5-00001-40-00003, Rev. 00C, WFR Vessels, Section 8, Dip Leg and Outlet Line N18, N21, N22, N63, N70A, N70B, N70C Structural Steel Supports; 24590-QL-SRA-MTF5-00001-40-00004, Rev. 00A, Pulse Jet Mixers Structural Steel Supports: Attachment G PJM's Hydrodynamic Loading, Attachment G.A RISA output

Summary of Assessment

For each item of "Information Assessed" (i.e., Criteria) on the following pages, the items listed under "Source of Information" were reviewed and found to furnish adequate design controls and requirements to assure the design intent fully satisfies the WAC requirements.

	Information Assessed	Source of Information	Assessment
Design	Vessel design standards are appropriate and adequate for the vessel's intended use.	Drawings, Mechanical Data Sheets and Change Notices listed above under references; 24590-PTF-3YD-FRP-00001, Rev. 0, System Description for Waste Feed Receipt Process (FRP); SDCN No. 24590-PTF-3YN-FRP-00001, Rev. 0, to 24590-PTF-3YD-FRP-00001, Rev. 0; 24590-WTP-3PS-MV00-T0001, Rev. 1, Engineering Specification for Pressure Vessel Design and Fabrication; 24590-WTP-3PS-MV00-T0003, Rev. 2, Engineering Specification for Pressure Vessel Fatigue Analysis; 24590-WTP-3PS-MVB2-T0001, Rev. 1, Engineering Specification for Welding of Pressure Vessels, Heat Exchangers and Boilers; ASME Boiler and Pressure Vessel (B&PV) Code, Section VIII, Division 1, Rules for Construction of Pressure Vessels, American Society of Mechanical Engineers; ASME Boiler and Pressure Vessel (B&PV) Code, Section VIII, Division 2, Alternative Rules, American Society of Mechanical Engineers	The FRP system Waste Feed Receipt Process Vessels (FRP-VSL-00002A through 00002D) and all vessel appurtenances are to be designed to the ASME B&PV Code, Section VIII, Division 1 rules, which are appropriate for pressure vessels operating with mixed waste solutions over the pressure and temperature ranges specified for these vessels. Supplementary requirements are specified in the Engineering Specification for Pressure Vessel Design and Fabrication. Supplementary requirements address pressure vessel fatigue analysis, positive material identification, fabrication tolerances, acceptable welding procedures for the vessel and appurtenances, welder qualifications and testing records, NDE inspections and records, and packaging, shipping, handling and storage requirements. Some of the vessel internal equipment is subject to cyclic loading. The fatigue design analyses for the vessels and internal equipment (e.g., pulse jet mixers) are adequate. The fatigue design standards, ASME Section VIII, Division 2, are appropriate for components with a high number of load cycles. The FRP Waste Receipt Vessels (FRP-VSL-00002A through 00002D) are vertical vessels with a 564 in. ID and a vertical length of 322 in. tangent to tangent supported on cylindrical skirts. Top and bottom heads are torispherical shells with a minimum thickness of 1 3/16 in. The shells are specified to have a minimum thickness of 1 inch. Materials for the shells, heads and vessel's internal equipment are SA 240 316L stainless steel (max. 0.030% carbon) dual certified, hereinafter referred to as 316L stainless steel. The skirts are to be SA-240 304L stainless steel (max. 0.030% carbon) dual certified, hereinafter referred to as 304L stainless steel. The operating volume is to be about 406,800 gallons and the total internal volume is to be about 474,000 gallons.

	Information Assessed	Source of Information	Assessment
Design	If a non-standard vessel is to be used, the design calculations demonstrate sound engineering principles of construction.	Drawings, Mechanical Data Sheets and Change Notices listed above under references; 24590-WTP-3PS-MV00-T0001, Rev. 1, Engineering Specification for Pressure Vessel Design and Fabrication; ASME Boiler and Pressure Vessel (B&PV) Code, Section VIII, Division 1, Rules for Construction of Pressure Vessels, American Society of Mechanical Engineers	The FRP Waste Feed Receipt Vessels (FRP-VSL-00002A-D) are standard ASME B&PV Code, Section VIII, Division 1 vessels. The Mechanical Data Sheets require that the vessels be delivered after design, fabrication, inspection and testing with an ASME code stamp and that the vessels be nationally registered. Because of their size, these vessels are to be field erected from shop fabricated subassemblies at the construction site for the PTF. The Subcontract Submittals were reviewed for all load cases and load combinations specified in the applicable design requirements. In all cases, the computed maximum stresses are within the allowable code limits. As discussed in the item immediately above, the vessel design standards are appropriate and adequate for the vessels' intended use.

	Information Assessed	Source of Information	Assessment
Design	Vessel has adequate strength, after consideration of the corrosion allowance, to withstand the operating pressure, operating temperature, and seismic loads.	Drawings, Mechanical Data Sheets and Change Notices listed above under references; 24590-WTP-3PS-MV00-T0001, Rev. 1, Engineering Specification for Pressure Vessel Design and Fabrication; 24590-WTP-3PS-MV00-T0002, Rev. 2, Engineering Specification for Seismic Qualification Criteria for Pressure Vessels; 24590-WTP-3PS-SS90-T0001, Rev. 0, Engineering Specification for Seismic Qualification of Seismic Category I/II Equipment and Vessels; ASME Boiler and Pressure Vessel (B&PV) Code, Section VIII, Division 1, Rules for Construction of Pressure Vessels, American Society of Mechanical Engineers; ASME Boiler and Pressure Vessel (B&PV) Code, Section VIII, Division 2, Alternative Rules, American Society of Mechanical Engineers	The Mechanical Data Sheets identify each vessel's operating pressure and temperature ranges, the materials selected for each vessel, the corrosion allowance(s), and the vessel quality levels, which determine the requirements for seismic design. The design specifications for the vessels require specific consideration of the operating pressures and temperatures and seismic loads in the design process. ASME B&PV Code, Section VIII, Division 1 requires that corrosion allowance material not be considered when evaluating the adequacy of vessel components for these loads at end of life. The Engineering Specification for Seismic Qualification Criteria for Pressure Vessels adopts ASME B&PV Code, Section VIII, Div. 2 design rules to supplement the Division 1 rules to address seismic design and analysis of the vessels. Detailed requirements for seismic design of SC-I/II vessels are furnished in the specification for Seismic Qualification of Seismic Category I/II Equipment and Vessels. These codes and standards are adequate and appropriate for design and construction of the FRP Waste Feed Receipt vessels to withstand anticipated operating pressure and temperature loads and seismic loads for the specified design life.
Foundations	Vessel foundation will maintain the load of a full vessel.	Drawings and Change Notices listed above under references; 24590-WTP-3PS-MV00-T0001, Rev. 1, Engineering Specification for Pressure Vessel Design and Fabrication	The Engineering Specification for Pressure Vessel Design and Fabrication requires the use of ASME B&PV code, Section VIII, Division I for design of the vessel skirts. This code assures an adequate design for the vessel skirts because it requires that vessel foundations design must be adequate to support the loads from full vessels.
	If in an area subject to flooding, the vessel is anchored.	Drawings and Change Notices listed above under References; 24590-WTP-3PS-MV00-T0001, Rev. 1, Engineering Specification for Pressure Vessel Design and Fabrication	Buoyant forces of an empty vessel in a flooded room are a mandatory standard design load case in this specification for Pressure Vessel Design and Fabrication.

	Information Assessed	Source of Information	Assessment
Frost Heave	Vessel system will withstand the effects of frost heave.	24590-WTP-DB-ENG-01-001, Rev. 1B, Basis of Design	The Basis of Design document requires that all structural foundations extend a distance below grade that exceeds the depth of the frost line in order to preclude frost heave. Therefore, the vessels are not subject to frost heave.
Waste Characteristics	Characteristics of the waste to be stored or treated have been identified (ignitable, reactive, toxic, specific gravity, vapor pressure, flash point, storage temperature)	Mechanical Data Sheets listed above under references; Plant Item Material Selection Data Sheet, 24590-PTF-N1D-FRP-P0001, Rev. 2, FRP-VSL-00002A-D (PTF) Waste Feed Receipt Vessels; 24590-WTP-PER-PR-03-002, Rev. 1, Toxic Vapors and Emissions from WTP Tank Systems and Miscellaneous Treatment Unit System; 24590-WTP-PER-PR-03-001, Rev. 1, Prevention of Hydrogen Accumulation in WTP Tank Systems and Miscellaneous Treatment Unit Systems	The Mechanical Data Sheets present the waste specific gravity, storage temperatures and pressures. The Vessel Material Selection Data Sheet addresses the pH range and chemical composition of the waste to select appropriate vessel materials and specify the corrosion allowance. Other waste characteristics that are hazardous, such as ignitability, flash point, and toxicity are addressed by the Toxic Vapors and Emissions from WTP Tank Systems document and the Prevention of Hydrogen Accumulation in WTP Tank Systems document. The FRP vessels provide primary confinement of the waste during normal operations, abnormal operations and during and after a Design Basis Earthquake. The vessels must retain integrity to insure that the hydrogen controls for the vessel head space continue functioning to provide for air purge, dilution and mixing during normal operations, abnormal operations and during and after a Design Basis Earthquake.
	Vessel is designed to store or treat the wastes with the characteristics defined above and any treatment reagents.	Plant Item Material Selection Data Sheet, 24590-PTF-N1D-FRP-P0001, Rev. 1, FRP-VSL-00002A-D (PTF) Waste Feed Receipt Vessels; 24590-PTF-3YD-FRP-00001, Rev. 0, System Description for Waste Feed Receipt Process (FRP); SDCN No. 24590-PTF-3YN-FRP-00001, Rev. 0, to 24590-PTF-3YD-FRP-00001, Rev. 0	The Vessel Material Selection Data Sheet demonstrates that the vessel is designed to store the wastes discussed above. The System Description discusses normal and abnormal operations for the FRP vessels (FRP-VSL-00002A-D). Reagents will not routinely be added to these vessels.

	Information Assessed	Source of Information	Assessment
Waste Char.	The waste types are compatible with each other.	24590-PTF-3YD-FRP-00001, Rev. 0, System Description for Waste Feed Receipt Process (FRP); SDCN No. 24590-PTF-3YN-FRP-00001, Rev. 0, to 24590-PTF-3YD-FRP-00001, Rev. 0	The System Description for the Waste Feed Receipt Process does not describe any operations where incompatible wastes are mixed in these vessels for processing. The FRP vessels function primarily as lag storage for bringing waste from the Hanford tank farms into the Pretreatment facility for processing by other PTF systems.
Corrosion Protection	Vessel material and protective coatings ensure the vessel structure is adequately protected form the corrosive effects of the waste stream and external environments (expected to not leak or fail for the design life of the system)	Drawings, Mechanical Data Sheets and Change Notices listed above under references; Plant Item Material Selection Data Sheet, 24590-PTF-N1D-FRP-P0001, Rev. 1, FRP-VSL-00002A-D (PTF) Waste Feed Receipt Vessels; 24590-PTF-3YD-FRP-00001, Rev. 0, System Description for Waste Feed Receipt Process (FRP); SDCN No. 24590-PTF-3YN-FRP-00001, Rev. 0, to 24590-PTF-3YD-FRP-00001, Rev. 0	The Plant Item Material Selection Data Sheet shows that the FRP vessels (FRP-VSL-00002A-D) normally operate at, or above pH 12 at a temperature of between 60 and 120 °F. Potential abnormal operations up to 240 °F and acid cleaning operations of the vessels were also considered. The vessels material was selected as 316L stainless steel with a corrosion allowance of 0.04 in. The System Description discusses a maximum receiving temperature for normal operations of 120 °F with solids content below 5 wt%. The vessels are equipped with internal wash rings for decontamination as shown on the drawings. The FRP vessels are located in cells P-0108, P-0108A, P-0108B, and P-0108C at elevation 0 ft. in the PTF. These cells are equipped with liners and sumps to contain potential leaks. The FRP vessels are designed to overflow to the PWD ultimate overflow vessel (PWD-VSL-00033). Therefore, the cells should remain dry during normal operations which will limit external corrosion of the vessels over the facility design life.
Corrosion Allowance	Corrosion allowance is adequate for the intended service life of the vessel.	Plant Item Material Selection Data Sheet, 24590-PTF-N1D-FRP-P0001, Rev. 2, FRP-VSL-00002A-D (PTF) Waste Feed Receipt Vessels; Mechanical Data Sheets listed above under references.	The bases for the FRP vessels material selection and corrosion allowance is furnished in the Plant Item Material Selection Data Sheet. Selection of 316L stainless steel with a corrosion allowance of 0.04 in. for a service life of 40 years is adequate and appropriate. The material selections and corrosion allowances are carried forward to the Mechanical Data Sheets consistently and correctly.

	Information Assessed	Source of Information	Assessment
Pressure Relief	Pressure controls (vents and relief valves) are adequately designed to ensure pressure relief if normal operating pressures in the vessel are exceeded.	Drawings and Change Notices listed above under references;	The FRP vessels are designed to overflow to the PWD ultimate overflow vessel (PWD-VSL-00033) located at elevation (-) 45'-0". The unrestricted overflow lines are sized 8 in. diameter as shown on the drawings and are adequate to prevent over pressurization of the vessels.

R10462241

STRUCTURAL INTEGRITY ASSESSMENT OF THE PRETREATMENT FACILITY TREATED LAW CONCENTRATE STORAGE PROCESS (TCP) SYSTEM VESSEL (TCP-VSL-00001)

BECHTEL

Job No. 24590

Bechtel National, Inc.

SUPPLIER DOCUMENT STATUS

1. [X] **Work may proceed.**
2. [ ] **Revise and resubmit. Work may proceed subject to resolution of indicated comments.**
3. [ ] **Revise and resubmit. Work may not proceed.**
4. [ ] **Review not required. Work may proceed.**

Permission to proceed does not constitute acceptance or approval of design details, calculations, analyses, test methods, or materials developed or selected by the supplier and does not relieve supplier from full compliance with contractual obligations.

REVIEWED

G-321 Document Category N/A
[From Supplement A to G-321-E (E) or G-321-V (V), as applicable, or "N/A" if SSRS is used]

Supersedes BNI Document No. N/A Rev. _____
[When applicable]

Accepted by DC Pfluger (Print Name) DC Pfluger (Signature) 1/31/05 (Date)

Released by N/A (Print Name) _____ (Signature) _____ (Date)
[When applicable]

416 GP&S 7-03

Please note that source, special nuclear and byproduct materials, as defined in the Atomic Energy Act of 1954 (AEA), are regulated at the U.S. Department of Energy (DOE) facilities exclusively by DOE acting pursuant to its AEA authority. DOE asserts, that pursuant to the AEA, it has sole and exclusive responsibility and authority to regulate source, special nuclear, and byproduct materials at DOE-owned nuclear facilities. Information contained herein on radionuclides is provided for process description purposes only.

24590-CM-HC4-HXYG-00138-02-04 REV. 00B

IQRPE REVIEW
OF
THE PRETREATMENT FACILITY TREATED LAW CONCENTRATE STORAGE PROCESS (TCP) SYSTEM VESSEL (TCP-VSL-00001)

"I, Tarlok Hundal, have reviewed, and certified a portion of the design of a new tank system or component located at the Hanford Waste Treatment Plant, owned/operated by Department of Energy, Office of River Protection, Richland, Washington. My duties were independent review of the current design for the Pretreatment Facility Treated LAW Concentrate Storage Process (TCP) System Vessel (TCP-VSL-00001) as required by the Washington Administrative Code, *Dangerous Waste Regulations*, Section WAC-173-303-640 (3)(a) through (g) applicable components."

"I certify under penalty of law that I have personally examined and am familiar with the information submitted in this document and all attachments and that, based on my inquiry of those individuals immediately responsible for obtaining the information, I believe that the information is true, accurate, and complete. I am aware that there are significant penalties for submitting false information, including the possibility of fine and imprisonment."

The documentation reviewed indicates that the design intent fully satisfies the requirements of the WAC.

The attached review is seven pages numbered 1 through 7.

TARLOK SINGH HUNDAL
STATE OF WASHINGTON
20213
REGISTERED
PROFESSIONAL ENGINEER

EXPIRES: 02/15/06

Signature

1/27/05
Date

Scope	Scope of this Integrity Assessment	The scope of this integrity assessment includes the Pretreatment Facility TCP Treated LAW Concentrate Storage Vessel (TCP-VSL-00001).
References	Material Requisition, Specifications, and Drawings.	Material Requisition: 24590-CM-MRB-MVA0-00001, Rev. 1 (including MRS Nos. S0004, S0005, S0006, S0010, S0011, and S0012): Specifications: The following Specifications with their respective revision and specification change notices are listed in the above Material Requisition: 24590-WTP-3PS-MV00-T0001, Engineering Specification for Pressure Vessel Design and Fabrication; 24590-WTP-3PS-MV00-T0002, Engineering Specification for Seismic Qualification Criteria for Pressure Vessels; 24590-WTP-3PS-MV00-T0003, Engineering Specification for Pressure Vessel Fatigue Analysis; 24590-WTP-3PS-G000-T0001, General Specification for Supplier Quality Assurance Program Requirements; 24590-WTP-3PS-G000-T0002, Engineering Specification for Positive Material Identification (PMI); 24590-WTP-3PS-G000-T0003, General Specification for Packaging, Shipping, Handling, and Storage Requirements; 24590-WTP-3PS-FB01-T0001, Engineering Specification for Structural Design Loads for Seismic Category III/IV Equipment and Tanks. Drawings (including drawing change notices listed in the Material Requisition referenced above): 24590-PTF-MV-TCP-00002, Rev. 0, Equipment Assembly Treated LAW Concentrate Storage Vessel TCP-VSL-00001; 24590-PTF-P1-P01T-P0001, Rev. 4, Pretreatment General Arrangement Plan at EL. 0'-0"; 24590-PTF-P1-P01T-P0009, Rev. 8, Pretreatment Facility General Arrangement Section C-C; 24590-PTF-P1-P01T-P0010, Rev. 5, Pretreatment Facility General Arrangement Section D-D; 24590-PTF-P1-P01T-P0013, Rev. 5, Pretreatment Facility General Arrangement Sect. H-H and Sect. J-J; 24590-PTF-M5-V17T-P0006, Rev. 0, Process Flow Diagram Treated LAW Concentrate Storage - System TCP.
Summary of Assessment		For each item of "Information Assessed" (i.e., Criteria) on the following pages, the items listed under "Source of Information" were reviewed and found to furnish adequate design controls and requirements to ensure that the design intent fully satisfies the requirements of Washington Administrative Code, WAC-173-303-640, *Dangerous Waste Regulations* for Tank Systems.

Information Assessed		Source of Information	Assessment
Design	Vessel design standards are appropriate and adequate for the vessel's intended use.	Drawings, Material Requisitions, and Specifications listed above under References; Mechanical Data Sheet, 24590-PTF-MVD-TCP-00002, Rev. 3, Treated LAW Concentrate Storage Vessel TCP-VSL-00001; ASME Section VIII, Division 1, Rules for Construction of Pressure Vessels, American Society of Mechanical Engineers.	The Material Requisition requires the use of Engineering Specification for Pressure Vessel Design and Fabrication for TCP-VSL-00001vessel. This specification requires that the vessel and all appurtenances are to be designed to the ASME Section VIII, Division 1 Code rules. These rules are appropriate for an unfired pressure vessel operating with aqueous mixed waste solutions over the pressure and temperature range specified for this vessel. Supplementary requirements are specified in this specification for Pressure Vessel Design and Fabrication. These supplementary requirements address pressure vessel fatigue analysis, positive material identification, standard fabrication tolerances, acceptable welding procedures for the vessel and appurtenances, welder qualifications and testing records, NDE inspections and records, quality assurance requirements, and packaging, shipping, handling and storage requirements. The Mechanical Data Sheet identifies the TCP vessel as Quality Level (CM, Commercial Grade) and Seismic Category (SC-III) equipment. The above stated codes and standards are adequate and acceptable for the intended use of this Commercial Grade vessel. The TCP-VSL-00001 is a vertical vessel. The drawings and Mechanical Data Sheet show its size as 318" ID by 362" tangent to tangent height, supported on 68" high cylindrical skirt which in turn is supported on a ring beam to be anchored to the floor concrete slab. Top and bottom heads are flanged and dished type. The shell, heads, and skirt are to be built with a 1 in. minimum thick plate. Material for the shell, heads, and internals is to be SA-240 316 stainless steel (with maximum 0.030% Carbon, dual certified). This material hereinafter will be described as 316L stainless steel. The maximum operating volume is to be about 129,960 gallons and the total internal volume is to be about 146,740 gallons.

	Information Assessed	Source of Information	Assessment
Design	If a non-standard vessel is to be used, the design calculations demonstrate sound engineering principles of construction.	Specifications listed above under References; ASME Section VIII, Division 1, Rules for Construction of Pressure Vessels, American Society of Mechanical Engineers.	This TCP system vessel TCP-VSL-00001 is a standard vessel. The Engineering Specification for Pressure Vessel Design and Fabrication requires that vessel TCP-VSL-00001 is to be designed and fabricated in accordance with the requirements of ASME Section VIII, Division 1 Code. The vessel is to be delivered after design, fabrication, inspection and testing with an ASME code stamp and the vessel will be registered with the National Board. It is a shop fabricated vessel for mixed waste service in the Pretreatment Facility. The vessel design standards are appropriate and adequate for the vessel's design and fabrication.
	Vessel has adequate strength, after consideration of the corrosion allowance, to withstand the operating pressure, operating temperature, and seismic loads.	Specifications listed above under References; Mechanical Data Sheet, 24590-PTF-MVD-TCP-00002, Rev. 3, Treated LAW Concentrate Storage Vessel TCP-VSL-00001; ASME Section VIII, Division 1, Rules for Construction of Pressure Vessels, American Society of Mechanical Engineers; UBC, 1997, Uniform Building Code, International Conference of Building Officials.	The Engineering Specification for Pressure Vessel Design and Fabrication requires that the TCP vessel is to be designed to ASME Section VIII, Division 1 Code rules. This code requires specific consideration of the operating pressures, temperatures, seismic loads, and corrosion/erosion allowance in the design process. Supplementary design criteria are specified in the Engineering Specifications for Seismic Qualification Criteria and Structural Design Loads for Seismic Category III & IV Equipment and Tanks to provide for the seismic design analysis. The Mechanical Data Sheet identifies the operating pressure and temperature ranges for the vessel, the materials selected in the corrosion report, the corrosion/erosion allowance, and the requirements for seismic qualification in the design. The Mechanical Data Sheet indicates that vessel TCP-VSL-00001 is to be analyzed as Seismic Category (SC-III) vessel which requires the use of the seismic design requirements in the 1997 UBC. These are appropriate codes and criteria to ensure that the vessel has adequate strength at the end of its design life.

Information Assessed		Source of Information	Assessment
Foundation	Vessel foundation will maintain the load of a full vessel.	Drawings and Specifications listed above under References.	The Equipment Assembly drawing shows the support arrangements for TCP-VSL-00001. The vessel is provided with a cylindrical skirt and a ring beam to provide for bearing on concrete and anchorage. The Engineering Specification for Pressure Vessel Design and Fabrication requirements ensure adequate vessel foundation design.
	If in an area subject to flooding, the vessel is anchored.	Specifications listed above under References.	Buoyant forces of an empty vessel in a flooded room are a mandatory standard design load case in the Engineering Specification for Pressure Vessel Design and Fabrication.
Frost Heave	Vessel system will withstand the effects of frost heave.	Drawings listed above under References; 24590-PFT-3YD-TCP-00001, Rev. 0, System Description for Treated LAW Concentrate Storage Process (TCP) including System Description Change Notice (SDCN), SDCN No. 24590-PTF-3YN-TCP-00001; 24590-WTP-DC-ST-01-001, Rev. 6, Structural Design Criteria.	The System Description and general arrangement drawings identify that vessel TCP-VSL-00001 is located in an inaccessible process cell P-0117A at Elevation 0'-0" of the Pretreatment Facility. This cell is supported by the PTF mat foundation. The Structural Design Criteria requires that all structural foundations extend into the surrounding soil below the frost line in order to preclude frost heave. The frost line is located 30 in. below finished grade. The 8-ft thick PTF mat foundation is not subject to the frost heave; therefore, the TCP system vessel will not be subject to frost heave effects.

	Information Assessed	Source of Information	Assessment
Waste Characteristics	Characteristics of the waste to be stored or treated have been identified (ignitable, reactive, toxic, specific gravity, vapor pressure, flash point, storage temperature)	Drawings listed above under References; 24590-PFT-3YD-TCP-00001, Rev. 0, System Description for Treated LAW Concentrate Storage Process (TCP) including System Description Change Notice (SDCN), SDCN No. 24590-PTF-3YN-TCP-00001; 24590-WTP-PER-PR-03-002, Rev. 1, Toxic Vapors and Emissions from WTP Tank Systems and Miscellaneous Treatment Unit Systems; 24590-WTP-PER-PR-03-001, Rev. 1, Prevention of Hydrogen Accumulation in WTP Tank Systems and Miscellaneous Treatment Unit Systems.	The System Description identifies that TCP-VSL-00001 serves as a lag storage vessel for treated LAW concentrate which is the feed stream for the Low Activity Waste process melters. The concentrate is primarily liquids with periodic small amounts of solids. The vessel is provided with a high pressure steam injection system to maintain the feed temperature. The head space of TCP-VSL-00001 is ventilated by the Pretreatment Vessel Vent Process System (PVP) to control aerosol evolution. A controlled air inlet line is provided for a positive air sweep of the vessel head space. Waste characteristics that are hazardous, such as ignitability, reactivity, and toxicity are appropriately addressed in the Toxic Vapors and Emissions document and Prevention of Hydrogen Accumulation document. These two documents do not specifically list this vessel to exhibit any hazardous characteristics. As shown on the assembly drawing, the vessel is furnished with grounding lugs to control the discharge of static electricity. Pulse Jet Mixers are provided in the vessel for mixing prior to transfers to homogenize the vessel contents. The process limit for undissolved solids is up to 20 wt. % to ensure that the concentrate can be transferred to the LAW Facility. The vessel is equipped with an internal spray ring for decontamination.
	Vessel is designed to store or treat the wastes with the characteristics defined above and any treatment reagents.	24590-PFT-3YD-TCP-00001, Rev. 0, System Description for Treated LAW Concentrate Storage Process (TCP) including System Description Change Notice (SDCN), SDCN No. 24590-PTF-3YN-TCP-00001; Plant Item Material Selection Data Sheet, 24590-PTF-N1D-TCP-P0001, Rev. 1, Treated LAW Concentrate Storage Vessel TCP-VSL-00001 (PTF).	Vessel TCP-VSL-00001 is designed to store the waste it receives. The TCP System Description document identifies that the vessel will be used for lag storage only. No additional chemical reagents will be added to the vessel contents during normal operations. The Plant Item Material Selection Data Sheet shows that the material selected for TCP-VSL-00001 takes into account the reagents added to the waste before the waste is received in the vessel.

Information Assessed		Source of Information	Assessment
Waste Characteristics	The waste types are compatible with each other.	24590-PFT-3YD-TCP-00001, Rev. 0, System Description for Treated LAW Concentrate Storage Process (TCP) including System Description Change Notice (SDCN), SDCN No. 24590-PTF-3YN-TCP-00001.	TCP-VSL-00001 is designated as a single-use vessel. The System Description document describes that the only function the vessel performs is to receive treated LAW concentrate for lag storage and to deliver treated LAW concentrate to the LAW Facility. If the treated LAW concentrate is out of specification, it is transferred to other process vessels in the Pretreatment Facility for additional treatment. Since it is a single-use vessel, the waste compatibility issue is irrelevant.
Compatibility	Vessel material and protective coatings ensure the vessel structure is adequately protected from the corrosive effects of the waste stream and external environments (expected to not leak or fail for the design life of the system)	Plant Item Material Selection Data Sheet, 24590-PTF-N1D-TCP-P0001, Rev. 1, Treated LAW Concentrate Storage Vessel TCP-VSL-00001 (PTF).	The Plant Item Material Selection Data Sheet shows that the material selected for TCP-VSL-00001 takes into account the acidic nature of the LAW SBS condensate received from the LAW facility and the reagents added to the waste received in the vessel. The material selected for the vessel is 316L stainless steel. The material selected is adequate to provide the required 40 year service life for this vessel.
Corrosion Allowance	Corrosion allowance is adequate for the intended service life of the vessel.	Plant Item Material Selection Data Sheet, 24590-PTF-N1D-TCP-P0001, Rev. 1, Treated LAW Concentrate Storage Vessel TCP-VSL-00001 (PTF); Mechanical Data Sheet, 24590-PTF-MVD-TCP-P0002, Rev. 3, Treated LAW Concentrate Storage Vessel TCP-VSL-00001.	The corrosion allowance is recommended in the Plant Item Material Selection Data Sheet. The uniform corrosion allowance of 0.040 in. for shell and heads (plus additional 0.164 in. for the bottom head to compensate for erosion due to pulse jet mixers cyclic operations) for a 40 year vessel life is adequate for 316L stainless steel in this waste environment. The material selection is correctly carried forward to the vessel's Mechanical Data Sheet. The materials chosen, welding processes selected, surface preparation, and pre-service inspections are appropriate for this caustic waste service. The vessel design provides internal spray wash ring to provide for periodic internal cleaning of the vessel.

	Information Assessed	Source of Information	Assessment
Pressure Relief	Pressure controls (vents and relief valves) are adequately designed to ensure pressure relief if normal operating pressures in the vessel are exceeded.	Drawings listed above under references.	The Equipment Assembly drawing shows that vessel TCP-VSL-00001 is equipped with an unrestricted 8 in. diameter overflow line and Process Flow Diagram drawings shows that this line drains to Plant Wash and Disposal System vessel (PWD-VSL-00033) located at a lower level, Elevation (-) 45'-0" in the PTF as shown on the general arrangement drawings. This line is much larger than any of the lines entering the vessel and therefore has an adequate flow capacity to preclude overpressure.

Job No. 24590

Bechtel National, Inc.

SUPPLIER DOCUMENT STATUS

1. [X] **Work may proceed.**
2. [ ] **Revise and resubmit. Work may proceed subject to resolution of indicated comments.**
3. [ ] **Revise and resubmit. Work may not proceed.**
4. [ ] **Review not required. Work may proceed.**

Permission to proceed does not constitute acceptance or approval of design details, calculations, analyses, test methods, or materials developed or selected by the supplier and does not relieve supplier from full compliance with contractual obligations.

REVIEWED										E&NS

G-321 Document Category N/A
[From Supplement A to G-321-E (E) or G-321-V (V), as applicable, or "N/A" if SSRS is used]

Supersedes BNI Document No. N/A Rev. _____
[When applicable]

Accepted by Dan Pflueger (Print Name) DC Pflueger (Signature) 10/13/03 (Date)

Released by _____ _____ _____
[When applicable] Print Name Signature Date

416 GP&S 7-03

24590-CM-HC4-HXYG-00138-02-05
REV. 00A

SUBCONTRACT SUBMITTAL

10/15/03

Processed/ Data Entry | Copied/ QA | Scanned | Filed

10-14-03

10/15/03

RPP-WTP
RECEIVED

OCT 09 2003

R10145797

COGEMA-IA-022, Rev. 0

BY PDC

IQRPE REVIEW – PRETREATMENT FACILITY TREATED LAW CONCENTRATE STORAGE PROCESS (TCP) ANCILLARY EQUIPMENT

"I, John T. Baxter, have reviewed, and certified a portion of the design of a new tank system or component located at the Hanford Waste Treatment Plant, owned/operated by Department of Energy, Office of River Protection, Richland, Washington. My duties were independent review of the current design for the Pretreatment Facility Treated LAW Concentrate Storage Process (TCP) Ancillary Equipment as required by the Dangerous Waste Regulations, namely, WAC 173-303-640(3) applicable paragraphs, i.e., (a) through (g)."

"I certify under penalty of law that I have personally examined and am familiar with the information submitted in this document and all attachments and that, based on my inquiry of those individuals immediately responsible for obtaining the information, I believe that the information is true, accurate, and complete. I am aware that there are significant penalties for submitting false information, including the possibility of fine and imprisonment."

The documentation reviewed indicate that the design intent fully satisfies the requirements of the WAC.

The attached review is seven (7) sheets numbered one (1) through seven (7).

JOHN T. BAXTER
STATE OF WASHINGTON
18978
REGISTERED PROFESSIONAL ENGINEER
EXPIRES: 10/28/04

10/13/03
(B) Processed/ Data Entry, Copied/ QA, Scanned, Filed
(A) KS 10/9/03
(C) dw 10/9/03

John T. Baxter
Signature

10/02/2003
Date

24590-CM-HC4-HXYG-00138-CQ-CS, REV. CCA

STRUCTURAL INTEGRITY ASSESSMENT OF THE PRETREATMENT FACILITY TREATED LAW CONCENTRATE STORAGE PROCESS (TCP) ANCILLARY EQUIPMENT

COGEMA-IA-022
REV. 0

Please note that source, special nuclear and byproduct materials, as defined in the Atomic Energy Act of 1954 (AEA), are regulated at the U.S. Department of Energy (DOE) facilities exclusively by DOE acting pursuant to its AEA authority. DOE asserts, that pursuant to the AEA, it has sole and exclusive responsibility and authority to regulate source, special nuclear, and byproduct materials at DOE-owned nuclear facilities. Information contained herein on radionuclides is provided for process description purposes only.

Scope	Scope of this Integrity Assessment	This Integrity Assessment addresses ancillary equipment for the Pretreatment Facility (PTF) Treated LAW Concentrate Process (TCP) System. The vessel (TCP-VSL-00001) and ancillary equipment are located in a central hot cell and adjacent process cells in the Pretreatment Facility, and TCP-BULGE-00004 is located in an adjacent R3/C3 area. Ancillary equipment located inside the TCP system vessel is addressed separately in the Integrity Assessment for the vessel. Direct buried coaxial transfer lines located outside the Pretreatment Facility are outside the scope of this Integrity Assessment.
References	Drawings and System Description	24590-PTF-M5-V17T-P0006, Rev. 0, Process Flow Diagram Treated LAW Concentrate Storage-System TCP; 24590-PTF-M6-TCP-P0001, Rev. 0, P&ID - PTF Treated LAW Concentrate Storage System TCP-VSL-00001 (Q); 24590-PTF-M6-TCP-P0002, Rev. 0, P&ID - PTF Treated LAW Concentrate Storage Utility Services - PSA Rack (Q); 24590-PTF-P1-P01T-P0001, Rev. 2, Pretreatment Facility General Arrangement Plan at EL. 0'-0"; 24590-PTF-P1-P01T-P0013, Rev. 3, Pretreatment Facility General Arrangement Sect. H-H and Sect. J-J; 24590-PTF-3YD-TCP-00001, Rev. 0, System Description for Treated LAW Concentrate Storage Process (TCP); System Description Change Notice (SDCN), SDCN NO. 24590-PTF-3YN-TCP-00001 for System Description Number 24590-PTF-3YD-TCP-00001, Rev. 0

Summary of Assessment

For each item of "Information Assessed" (i.e., Criteria) on the following pages, the items listed under "Source of Information" were reviewed and found to furnish adequate design controls and requirements to assure the design intent fully satisfies the WAC requirements.

	Information Assessed	Source of Information	Discussion
Design	Ancillary equipment design standards are appropriate and adequate for the equipment's intended use.	Drawings listed above under References; 24590-WTP-DC-PS-01-001, Rev 1, Pipe Stress Design Criteria; 24590-WTP-3PS-MX00-TP001, Rev. 1, Engineering Specification for Process Bulge Design and Fabrication; ASME B31.3 Code, Process Piping, 1996 Edition, American Society of Mechanical Engineers; ASME B&PV Code, Section VIII Pressure Vessels; 24590-PTF-MXD-TCP-00001, Rev. A, Mechanical Systems Data Sheet: Process Bulge, TCP-BULGE-00004	The Pipe Stress Design Criteria identifies ASME B31.3 as the design code for piping systems of the WTP. The P&ID drawings show the process piping as Commercial Grade and Seismic Category (SC-III). Ancillary equipment associated with the Pulse Jet Ventilation (PJV) system is Quality Level (QL-2) and Seismic Category (SC-II). The Engineering Specification for Process Bulge Design and Fabrication includes requirements for general design, fabrication, project management, quality assurance, inspection and testing of Process Bulges for use in WTP facilities. The Mechanical Systems Data Sheet indicates that TCP-BULGE-00004 secondary containment structure is Quality Level (QL-2), Seismic Category (SC-II) and is to be designed in accordance with ASME B&PV code, Section VIII, Pressure Vessels. Piping within TCP-BULGE-00004 is Quality Level (QL-1), Seismic Category (SC-I) and is to be designed in accordance with ASME B31.3. Other bulge components are Commercial Grade, Seismic Category (SC-III). The codes and standards are acceptable and adequate for the design of both the ancillary piping and the process bulge for the intended service.
	If the ancillary equipment to be used is not built to a design standard, the design calculations demonstrate sound engineering principles of construction.	24590-WTP-DC-PS-01-001, Rev 1, Pipe Stress Design Criteria; 24590-WTP-3PS-MX00-TP001, Rev. 1, Engineering Specification for Process Bulge Design and Fabrication	The ancillary equipment is built to design standards. The Pipe Stress Design Criteria specifies that piping is to be designed in accordance with ASME B31.3. The Engineering Specification for Process Bulge Design requires bulge piping to be designed to ASME B31.3 and the bulge secondary containment to be designed to ASME B&PV code, Section VIII.

	Information Assessed	Source of Information	Discussion
Design	Ancillary equipment has adequate strength at the end of its design life to withstand the operating pressure, operating temperature, thermal expansion, and seismic loads. Equipment is protected against physical damage and excessive stress due to settlement, vibration, expansion, or contraction.	24590-WTP-DC-PS-01-001, Rev 1, Pipe Stress Design Criteria; 24590-WTP-PER-M-02-002, Rev 0, Materials for Ancillary Equipment; 24590-WTP-3PS-MX00-TP001, Rev. 1, Engineering Specification for Process Bulge Design and Fabrication	The Pipe Stress Design Criteria requires the use of the ASME B31.3 Code for piping design. ASME B31.3 requires explicit consideration of operating pressure, operating temperature, thermal expansion/contraction, settlement, vibration, and corrosion allowance in the design of piping. Elements of the ASME B&PV Code, Section III (Subsection NC and Appendices F and N) are used to supplement the requirements of ASME B31.3 for seismic design of Seismic Category (SC-I/II) ancillary equipment. ASME III, Subsection NC and Appendix F, and the Uniform Building Code (UBC) are used to supplement the requirements of ASME B31.3 for seismic design of Seismic Category (SC-III/SC-IV) ancillary equipment. Details of the seismic design methods are discussed in the Pipe Stress Design Criteria document. The Engineering Specification for Process Bulge Design and Fabrication requires the bulge secondary containment to be designed in accordance with ASME B&PV Code, Section VIII requirements for a similar set of design conditions to those specified in ASME B31.3 for process piping. Seismic design for Seismic Category (SC-I/II) bulge structures and components is in accordance with the specification Seismic Qualification of Seismic Category I/II Equipment and Tanks and AISC N690. Seismic Design for Seismic Category (SC-III/IV) bulge structures and components is in accordance with the UBC and AISC Allowable Stress Design method. The Materials for Ancillary Equipment document uses a conservative design approach specifying that ancillary equipment downstream of a waste source vessel is to be constructed of the same or better material and with the same corrosion allowance as the source vessel itself.

5

	Information Assessed	Source of Information	Discussion
Supports	Ancillary equipment supports are adequately designed.	24590-WTP-DC-PS-01-002, Rev 1, Pipe Support Design Criteria; 24590-WTP-PL-PS-01-001, Rev 1, Verification and Validation Test Plan for Bechtel's ME150 Pipe Support Family of Programs (PCFAPPS)	The Pipe Support Design Criteria considers all loadings identified in ASME B31.3 and utilizes ASME B&PV Code, Section III, Division 1, Subsection NF and Appendix F, to supplement the requirements of ASME B31.3 for seismic design of Seismic Category SC-I/II and SC-III/IV pipe supports. Bounding load cases are passed to the pipe support designers from the results of the ancillary equipment piping stress analyses. Details of the seismic design methodology are discussed in the Pipe Support Design Criteria document. Analysis is by manual calculation or approved computer programs that have been verified and validated. These are appropriate codes and standards for design of ancillary equipment supports for the TCP system. Ancillary equipment supports are to be designed to allow a minimum of heat to be transferred to the building structures (building structures not to exceed 150 deg F for concrete and 200 deg F for steel). Design standards for vessel internal equipment supports are discussed in the integrity assessment for the TCP system tanks.
Connections	Seams and connections are adequately designed.	24590-WTP-DB-ENG-01-001, Rev 0, Basis of Design; 24590-WTP-DC-PS-01-001, Rev. 1, Pipe Stress Design Criteria; 24590-WTP-3PS-MX00-TP001, Rev. 1, Engineering Specification for Process Bulge Design and Fabrication;	The Basis of Design specifies that in-cell piping that is non-maintainable will be fully welded. The Pipe Stress Design Criteria specifies the ASME B31.3 Process Piping design code for the piping systems. Welding is to be performed in accordance with the requirements of ASME B31.3 and the ASME B&PV Code, Section IX. The Engineering Specification for Process Bulge Design and Fabrication requires that welding for the bulge secondary containment is to be performed in accordance with the requirements of ASME B&PV Code, Sections VIII and IX. ANSI B16.5 is specified for flange designs. These are appropriate codes and standards for design and fabrication of the mixed waste TCP System ancillary equipment.
Supports	The system will withstand the effects of frost heave.	System Description and SDCN listed above under References; 24590-WTP-DC-ST-01-001, Rev. 1, Structural Design Criteria	The TCP system ancillary equipment considered in this assessment is located in process cells, TCP-BULGE-00004, and R3/C3 areas inside the Pretreatment Facility. The Structural Design Criteria requires that all structural foundations shall extend into the surrounding soil below the frost line to preclude frost heave. The frost line is 30 in. below grade. Therefore the ancillary equipment is not subject to the effects of frost heave.

6

	Information Assessed	Source of Information	Discussion
Waste Characteristics	Characteristics of the waste to be stored or treated have been identified (ignitable, reactive, toxic, specific gravity, vapor pressure, flash point, temperature)	24590-WTP-PSAR-ESH-01-002-02, Rev. 1, Preliminary Safety Analysis Report to Support Construction Authorization; PT Facility Specific Information; System Description and SDCN listed above under References; 24590-WTP-PER-PL-02-001, Rev. 2, Piping Material Class Description; 24590-WTP-3PS-PF00-T0001, Rev. 1, Engineering Specification for Jumper Fabrication for PT and HLW	The TCP System Description states that the primary functions of the TCP system are to receive Treated LAW concentrate waste from the Treated LAW Evaporation Process (TLP), provide lag storage for the waste, and to transfer this waste to the LAW facility for vitrification. The system vessel can also receive, store and transfer LAW concentrate from the Cesium Ion Exchange System (CXP), treated LAW concentrate from the Feed Receipt System (FRP), and treated solids from the Ultrafiltration Process (UFP). The ancillary equipment considered in this assessment will handle wastes with the same characteristics as do the source vessels. Operating pressures for ancillary equipment will be different from those of the vessels. Enveloping pressures and temperatures are reflected in the pipe class assigned to each pipe run as discussed in the Piping Material Class Description document. The Preliminary Safety Analysis Report (PSAR) provides a summary of potential hazardous conditions associated with each Pretreatment Facility vessel and the design provisions that are to be used to provide adequate control of each hazard. Design provisions for control of these hazards are listed in the PSAR. Although the TCP vessel is not considered a hazardous source for hydrogen generation, the Pretreatment Vessel Vent Process System provides offgas control in the TCP vessel head space and ancillary equipment. A facility wide grounding system is furnished to control ignition sources in this vessel and the ancillary equipment, including jumpers.
	Ancillary equipment is designed to handle the wastes with the characteristics defined above and any treatment reagents.	24590-WTP-PER-M-02-002, Rev 0, Materials for Ancillary Equipment; System Description and SDCN listed above under References	The System Description indicates that the TCP vessel is used only for lag storage of treated concentrate waste. Additional reagents are not introduced to this vessel during normal operations. The Materials for Ancillary Equipment document specifies that ancillary equipment materials that contact the waste are to be equal to or better than those of the upstream source vessels.

	Information Assessed	Source of Information	Discussion
Compatibility	The pH range of the waste, waste temperature and the corrosion behavior of the structural materials are adequately addressed. Ancillary equipment material and protective coatings ensure the ancillary equipment structure is adequately protected from the corrosive effects of the waste stream and external environments. The protection is sufficient to ensure the equipment will not leak or fail for the design life of the system.	System Description and SDCN listed above under References; 24590-WTP-PER-M-02-002, Rev 0, Materials for Ancillary Equipment; 24590-WTP-3PS-NN00-T0001, Rev 0, Engineering Specification for Hot and Anti-Sweat Thermal Insulation	The Basis of Design identifies a service design life of 40 years for the ancillary equipment. All non-maintainable items will be designed to last the life of the facility. Detailed materials selection (corrosion) evaluations are conducted for each vessel in the PTF facility during process design to assure a 40 year service life. The Materials for Ancillary Equipment document requires that the material selection and corrosion/erosion allowances for ancillary equipment in contact with the waste will be equal to or better than the material and corrosion allowance of the waste source vessel. The Thermal Insulation specification requires that all insulating materials used on the outside of ancillary equipment be pre-approved for use on austenitic stainless steel in accordance with applicable ASTM procedures and tests to preclude external corrosion of ancillary equipment. Therefore, the ancillary equipment will provide the expected design service life.
Corrosion Allowance	Corrosion allowance is adequate for the intended service life of the ancillary equipment.	System Description and SDCN listed above under References; 24590-WTP-PER-M-02-002, Rev 0, Materials for Ancillary Equipment; 24590-WTP-DC-PS-01-001, Rev. 1, Pipe Stress Design Criteria; 24590-WTP-PER-PL-02-001, Rev. 2, Piping Material Class Description	ASME B31.3 is the code for the WTP piping. Consideration of corrosion, including corrosion allowance, is a mandatory requirement of ASME B31.3. A required service life of 40 years is identified in the Basis of Design for ancillary equipment located in inaccessible process cells. Detailed materials selection (corrosion) evaluations are conducted for each vessel in the PTF facility during process design to assure a 40 year service life. The Materials for Ancillary Equipment document requires that downstream ancillary equipment is to be constructed of equal or better materials, and with the same corrosion allowance as the source vessel. Corrosion/Erosion allowances are listed for each Piping Material Class in the Piping Material Class Description document.

	Information Assessed	Source of Information	Discussion
Strength	Pressure controls (vents and relief valves) are adequately designed to ensure pressure relief if normal operating pressures in the vessels are exceeded.	24590-WTP-DC-PS-01-001, Rev. 1, Pipe Stress Design Criteria.	Pressure controls related to the TCP vessels themselves are discussed in their structural integrity assessments. ASME B31.3 is the design code for the WTP piping. ASME B31.3 requires provision be made to safely contain or relieve any pressure to which the piping may be subjected. ASME B31.3 piping not protected by a pressure relieving device, or that can be isolated from a pressure reliving device must be designed for at least the highest pressure that can be developed.
	Maximum flows and any unusual operating stresses are identified	Drawings listed above under References; 24590-WTP-DC-PS-01-001, Rev 1, Pipe Stress Design Criteria	The expected flow paths for the ancillary equipment are identified on the P&ID drawings. The Pipe Stress Design Criteria specifies the ASME B31.3 code for piping design. This code requires piping to be designed to the highest pressure that can be developed in a piping system assuring that maximum operating stresses remain within code allowables. Piping material classes are shown on the P&IDs embedded in the item numbers for each ancillary equipment component. The Piping Material Class Description document lists the bounding pressure and temperature limits for each piping material class.
Secondary Containment	Ancillary equipment is designed with secondary containment that is constructed of materials compatible with the waste and of sufficient strength to prevent failure (pressure gradients, waste, climatic conditions, daily operations), provided with a leak-detection system, and designed to drain and remove liquids.	Drawings listed above under References; System Description and SDCN listed above under References; 24590-WTP-DB-ENG-01-001, Rev 0, Basis of Design	The ancillary equipment considered in this assessment is located in process cells, TCP-BULGE-00004, and R3/C3 areas within the Pretreatment facility. Secondary containment for ancillary equipment within the process cells is provided by the liners and sumps within the cells which are outside the scope of this integrity assessment. Secondary containment in the R3/C3 areas is provided by special protective coatings, curbs, and regulated drain systems which are also outside the scope of this integrity assessment. All secondary containments will be provided with drains and leak detection systems for detection of primary containment leaks as discussed in the Basis of Design. The P&ID drawing shows that the Secondary Containment for TCP-BULGE-00004 is equipped with a drain routed to Plant Wash and Disposal System vessel PWD-VSL-00033.

9

COGEMA ENGINEERING

RECEIVED
OCT 0 9 2003
BNI-Subcontracts

October 2, 2003

COGEMA-03-0295

D. J. Whiting
Bechtel National, Inc.
Waste Treatment Plant
2435 Stevens Center
Richland, Washington 99352

Dear Ms. Whiting:

STRUCTURAL INTEGRITY ASSESSMENT OF THE PRETREATMENT FACILITY TREATED LAW CONCENTRATE STORAGE PROCESS (TCP) ANCILLARY EQUIPMENT

The integrity assessment has been completed per the contract requirements and is attached for your use. The assessment found the design intent is sufficient to ensure the ancillary equipment will be adequately designed and that the ancillary equipment will have sufficient structural strength, compatibility with the waste(s) to be stored or treated, and corrosion protection to ensure that they will not collapse, rupture, or fail.

If you have any questions, please contact me at (509) 376-5445, or via facsimile at (509) 372-0504.

Sincerely,

K. V. Scott, Manager
Facilities, Structures & Components

jb

Attachment

cc: D. C. Pfluger MS4-E2 w/ attachment

2425 Stevens Center Place, Second Floor, Richland, Washington 99352 Tel: (509) 372-3572 - Fax: (509) 372-3169
COGEMA Engineering Corporation

Job No. 24590

Bechtel National, Inc.

SUPPLIER DOCUMENT STATUS

1. ☒ **Work may proceed.**
2. ☐ **Revise and resubmit. Work may proceed subject to resolution of indicated comments.**
3. ☐ **Revise and resubmit. Work may not proceed.**
4. ☐ **Review not required. Work may proceed.**

Permission to proceed does not constitute acceptance or approval of design details, calculations, analyses, test methods, or materials developed or selected by the supplier and does not relieve supplier from full compliance with contractual obligations.

REVIEWED										ENG

G-321 Document Category N/A
[From Supplement A to G-321-E (E) or G-321-V (V), as applicable, or "N/A" if SSRS is used]

Supersedes BNI Document No. N/A Rev. _____
[When applicable]

Accepted by DC Pflinger (Print Name) [signature] (Signature) 12/4/03 (Date)

Released by _____ (Print Name) _____ (Signature) _____ (Date)
[When applicable]

416 GP&S 7-03

24590-CM-HC4-HXYG-00138-02-06
REV. 00A

SUBCONTRACT SUBMITTAL

Best Available Copy

R10173473

COGEMA-IA-025, Rev. 1

IQRPE REVIEW –
PRETREATMENT FACILITY ULTRAFILTRATION PROCESS SYSTEM (UFP)
ANCILLARY EQUIPMENT

"I, John T. Baxter, have reviewed, and certified a portion of the design of a new tank system or component located at the Hanford Waste Treatment Plant, owned/operated by Department of Energy, Office of River Protection, Richland, Washington. My duties were independent review of the current design for the Pretreatment Facility Ultrafiltration Process System (UFP) Ancillary Equipment as required by the Dangerous Waste Regulations, namely, WAC 173-303-640(3) applicable paragraphs, i.e., (a) through (g)."

"I certify under penalty of law that I have personally examined and am familiar with the information submitted in this document and all attachments and that, based on my inquiry of those individuals immediately responsible for obtaining the information, I believe that the information is true, accurate, and complete. I am aware that there are significant penalties for submitting false information, including the possibility of fine and imprisonment."

The documentation reviewed indicate that the design intent fully satisfies the requirements of the WAC.

The attached review is ten (10) sheets numbered one (1) through ten (10).

JOHN T. BAXTER
STATE OF WASHINGTON
18978
REGISTERED
PROFESSIONAL ENGINEER

EXPIRES: 10/28/04

John T. Baxter
Signature

12/03/2003
Date

24590-CM-HC4-HXYG-00138-02-06, Rev. 00A

STRUCTURAL INTEGRITY ASSESSMENT OF THE PRETREATMENT FACILITY ULTRAFILTRATION PROCESS SYSTEM (UFP) ANCILLARY EQUIPMENT

COGEMA-IA-025
REV. 1

Please note that source, special nuclear and byproduct materials, as defined in the Atomic Energy Act of 1954 (AEA), are regulated at the U.S. Department of Energy (DOE) facilities exclusively by DOE acting pursuant to its AEA authority. DOE asserts, that pursuant to the AEA, it has sole and exclusive responsibility and authority to regulate source, special nuclear, and byproduct materials at DOE-owned nuclear facilities. Information contained herein on radionuclides is provided for process description purposes only.

Scope	Scope of this Integrity Assessment	This integrity assessment includes: a. Ancillary equipment associated with the HLW PTF Ultrafiltration Feed Preparation System Vessels (UFP-VSL-00001A/B) as shown on drawing No. 24590-PTF-M6-UFP-P0001, Rev. 0; b. Ancillary equipment associated with the HLW PTF Ultrafiltration System Vessel (UFP-VSL-00002A) as shown on drawing No. 24590-PTF-M6-UFP-P0002, Rev. 0; c. Ancillary equipment associated with the HLW PTF Ultrafiltration System Vessel (UFP-VSL-00002B) as shown on drawing No. 24590-PTF-M6-UFP-P0003, Rev. 0; d. Ancillary equipment associated with the HLW PTF Ultrafiltration Permeate Collection System Vessels (UFP-VSL-00062A/B/C) as shown on drawing No. 24590-PTF-M6-UFP-P0004, Rev. 0; e. Ancillary equipment associated with the HLW PTF Ultrafiltration Utility Services PSA Racks shown on drawings 24590-PTF-M6-UFP-P0005, Rev. 0; 24590-PTF-M6-UFP-P0006, Rev. 0; 24590-PTF-M6-UFP-P0007, Rev. 0; 24590-PTF-M6-UFP-P0008, Rev. 0; 24590-PTF-M6-UFP-P0009, Rev. 0; 24590-PTF-M6-UFP-P0010, Rev. 0; 24590-PTF-M6-UFP-P0011, Rev. 0; f. Ancillary equipment associated with the HLW PTF Ultrafiltration Utility Services HPS Rack as shown on drawing 24590-PTF-M6-UFP-P0013, Rev. 0; g. Ancillary equipment associated with the HLW PTF Ultrafiltration Utility Services - Plant Wash Rack as shown on drawing 24590-PTF-M6-UFP-P0015, Rev. 0; h. Ancillary equipment associated with the HLW PTF Ultrafiltration Reagents & Process Air Bulge (UFP-BULGE-00001) as shown on drawing No. 24590-PTF-M6-UFP-P0016, Rev. 0 except that bulge UFP-BULGE-00001 is excluded from the scope of this integrity assessment; i. Ancillary equipment associated with the HLW PTF Ultrafiltration Reagents & Process Air Bulge (UFP-BULGE-00002) as shown on drawing No. 24590-PTF-M6-UFP-P0017, Rev. 0 except that bulge UFP-BULGE-00002 is excluded from the scope of this integrity assessment

References	Drawings and System Description	24590-PTF-M5-V17T-P0009, Rev. 0, Process Flow Diagram Ultrafiltration Feed Preparation System UFP; 24590-PTF-M6-UFP-P0001, Rev. 0, P&ID – PTF Ultrafiltration Feed Preparation System Vessels UFP-VSL-00001A/B (Q); 24590-PTF-M6-UFP-P0002, Rev. 0, P&ID – PTF Ultrafiltration System Vessel UFP-VSL-00002A (Q); 24590-PTF-M6-UFP-P0003, Rev. 0, P&ID – PTF Ultrafiltration System Vessel UFP-VSL-00002B (Q); 24590-PTF-M6-UFP-P0004, Rev. 0, P&ID – PTF Ultrafiltration Permeate Collection System Vessels UFP-VSL-00062A/B/C (Q); 24590-PTF-M6-UFP-P0005, Rev. 0, P&ID – PTF Ultrafiltration Utility Services-PSA Rack; 24590-PTF-M6-UFP-P0006, Rev. 0, P&ID – PTF Ultrafiltration Utility Services-PSA Rack; 24590-PTF-M6-UFP-P0007, Rev. 0, P&ID – PTF Ultrafiltration Utility Services-PSA Rack.(Q); 24590-PTF-M6-UFP-P0008, Rev. 0, P&ID – PTF Ultrafiltration Utility Services-PSA Rack (Q); 24590-PTF-M6-UFP-P0009, Rev. 0, P&ID – PTF Ultrafiltration Utility Services-PSA Rack; 24590-PTF-M6-UFP-P0010, Rev. 0, P&ID – PTF Ultrafiltration Utility Services-PSA Rack (Q); 24590-PTF-M6-UFP-P0011, Rev. 0, P&ID – PTF Ultrafiltration Utility Services-PSA Rack (Q); 24590-PTF-M6-UFP-P0013, Rev. 0, P&ID – PTF Ultrafiltration Utility Services HPS Rack; 24590-PTF-M6-UFP-P0015, Rev. 0, P&ID – PTF Ultrafiltration Utility Services-Plant Wash Rack.; 24590-PTF-M6-UFP-P0016, Rev. 0, P&ID – PTF Ultrafiltration Reagents & Process Air BULGE; 24590-PTF-M6-UFP-P0017, Rev. 0, P&ID – PTF Ultrafiltration Reagents & Process Air BULGE; 24590-PTF-3YD-UFP-00001, Rev. 0, System Description for Ultrafiltration Process System (UFP); System Description Change Notice (SDCN), SDCN NO. 24590-PTF-3YN-UFP-00001 for System Description Number 24590-PTF-3YD-UFP-00001, Rev. 0, System Description for Ultrafiltration Process System (UFP)

Summary of Assessment

For each item of "Information Assessed" (i.e., Criteria) on the following pages, the items listed under "Source of Information" were reviewed and found to furnish adequate design controls and requirements to assure the design intent fully satisfies the WAC requirements.

	Information Assessed	Source of Information	Discussion
Design	Ancillary equipment design standards are appropriate and adequate for the equipment's intended use.	Drawings listed above under References; 24590-WTP-DC-PS-01-001, Rev 2, Pipe Stress Design Criteria including "Pipe Stress Criteria"and "Span Method Criteria"; ASME B31.3 Code, Process Piping, 1996 Edition, American Society of Mechanical Engineers	The Pipe Stress Design Criteria document identifies ASME B31.3 as the design code for piping systems of the WTP. The P&ID drawings (P0001 through P0004) show that the main process piping in this system is Quality Level (QL-1) and Seismic Category (SC-1) to ensure containment of waste during normal operations, abnormal operations, and during and after a Design Basis Earthquake. Much of the equipment shown on the Plant Service Air (PSA) Rack P&ID drawings (P0005 through P0013) is Quality Level (QL-2), Seismic Category (SC-II). Plant Wash Rack ancillary equipment shown on P&ID drawing (P0015) is Quality Level (CM), commercial grade, and Seismic Category (SC-III). These Seismic Categories are discussed in detail in the Pipe Stress Design Criteria document. These codes and standards are acceptable and adequate for the design of the ancillary equipment for the intended service.
	If the ancillary equipment to be used is not built to a design standard, the design calculations demonstrate sound engineering principles of construction.	24590-WTP-DC-PS-01-001, Rev 2, Pipe Stress Design Criteria including "Pipe Stress Criteria"and "Span Method Criteria"	The ancillary equipment is built to design standards. The Pipe Stress Design Criteria document specifies that piping is to be designed in accordance with ASME B31.3.

	Information Assessed	Source of Information	Discussion
Design	Ancillary equipment has adequate strength at the end of its design life to withstand the operating pressure, operating temperature, thermal expansion, and seismic loads. Equipment is protected against physical damage and excessive stress due to settlement, vibration, expansion, or contraction.	24590-WTP-DC-PS-01-001, Rev 2, Pipe Stress Design Criteria including "Pipe Stress Criteria"and "Span Method Criteria"; Uniform Building Code (UBC), 1997 Edition, International Conference of Building Officials; ASME Boiler and Pressure Vessel Code, Section III, Rules for Construction of Nuclear Facility Components, Division 1, Subsection NC, Appendix N and Appendix F, 1995; 24590-WTP-VV-PS-01-001, Rev. 1, Verification and Validation Report for ME101, Linear Elastic Analysis of Piping, Version N6	The Pipe Stress Design Criteria document requires the use of the ASME B31.3 Code for piping design. ASME B31.3 requires explicit consideration of many loadings including operating pressure, operating temperature, thermal expansion/contraction, settlement, vibration, and corrosion allowance in the design of piping. Elements of the ASME B&PV Code, Section III, Division 1, Subsection NC, Appendix N and Appendix F are used to supplement the requirements of ASME B31.3 for seismic design of SC-I/SC-II piping. Similarly, ASME B&PV Code, Section III, Division 1, Subsection NC and Appendix F, and the Uniform Building Code (UBC) are used to supplement the requirements of ASME B31.3 for seismic design of SC-III/SC-IV piping. Details of the seismic design methods are discussed in the Pipe Stress Design Criteria document. Design is by hand calculations and computer codes that have been tested and approved as discussed in the Verification and Validation Report for ME101, Linear Elastic Analysis of Piping, Version N6. These are adequate and appropriate codes and standards to ensure that the ancillary equipment will have adequate strength at end of design life to withstand all anticipated loadings.

	Information Assessed	Source of Information	Discussion
Supports	Ancillary equipment supports are adequately designed.	Drawings - see references above; 24590-WTP-DC-PS-01-002, Rev 2, Pipe Support Design Criteria; 24590-WTP-PER-PS-02-001, Rev. 4, Ancillary Equipment Pipe Support Design; ASME B31.3 Code, Process Piping, 1996 Edition, American Society of Mechanical Engineers; ASME Boiler and Pressure Vessel Code, Section III, Rules for Construction of Nuclear Facility Components, Division 1, Subsection NF and Appendix F, 1995; 24590-WTP-PL-PS-01-001, Rev 1, Verification and Validation Test Plan for Bechtel's ME150 Pipe Support Family of Programs (PCFAPPS)	The Pipe Support Design Criteria considers all load types identified in ASME B31.3 and utilizes ASME Section III, Division 1, Subsection NF and Appendix F to supplement the requirements of ASME B31.3 for seismic design of SC-I/II and SC-III/IV pipe supports. Bounding load cases are passed to the pipe support designers from the results of the ancillary equipment piping stress analyses. Details of the seismic design methodology are discussed in the Pipe Support Design Criteria document. Design is by hand calculations and computer programs that have been tested and approved as discussed in the Verification and Validation Test Plan for Bechtel's ME150 Pipe Support Family of Programs (PCFAPPS). The Ancillary Equipment Pipe Support Design document shows examples of typical equipment supports. These are appropriate codes and standards for design of the UFP system ancillary equipment supports. Ancillary equipment supports are to be designed to allow a minimum of heat to be transferred to the building structures (building structures not to exceed 150 deg F for concrete and 200 deg F for steel). Design standards for vessel internal equipment supports are discussed in the integrity assessment for the UFP system vessels.

	Information Assessed	Source of Information	Discussion
Connections	Seams and connections are adequately designed.	24590-WTP-DB-ENG-01-001, Rev 1, Basis of Design; 24590-WTP-DC-PS-01-001, Rev. 2, Pipe Stress Design Criteria including "Pipe Stress Criteria"and "Span Method Criteria"; ASME Boiler and Pressure Vessel Code, Section IX, Welding and Brazing Qualifications; 24590-WTP-3PS-PF00-T0001, Rev. 1, Engineering Specification for Process Jumper Fabrication for PT and HLW	The Basis of Design states that in-cell piping that is non-maintainable will be fully welded. The Pipe Stress Design Criteria document specifies the ASME B31.3 Process Piping design code for the piping systems. Welding is to be performed in accordance with the requirements of ASME B31.3 and the ASME B&PV Code, Section IX. ANSI B 16.5 is specified for flange designs where flanges are acceptable for use. Remote handled piping connections in the central hot cell are made using jumpers fabricated in accordance with the Engineering Specification for Process Jumper Fabrication for PT and HLW. These are appropriate codes and standards for design and fabrication of the UFP system ancillary equipment.
Supports	The system will withstand the effects of frost heave.	System Description and SDCN listed above under References; 24590-WTP-DC-ST-01-001, Rev. 1, Structural Design Criteria	The ancillary equipment associated with the UFP system considered in this assessment is located in a central hot cell, adjacent inaccessible process cells, and surrounding R2/C3 platform areas at various elevations inside the PTF. The Structural Design Criteria requires that all structural foundations shall extend into the surrounding soil below the frost line to preclude frost heave. The frost line is 30 in. below grade. The PTF building foundations are not subject to frost heave; therefore, the ancillary equipment located inside the building is not subject to frost heave.

	Information Assessed	Source of Information	Discussion
Waste Characteristics	Characteristics of the waste to be stored or treated have been identified (ignitable, reactive, toxic, specific gravity, vapor pressure, flash point, temperature)	24590-WTP-PSAR-ESH-01-002-02, Rev. 1, Preliminary Safety Analysis Report (PSAR) to Support Construction Authorization; PT Facility Specific Information; System Description and SDCN listed above under References	The PSAR provides a summary of potential hazardous conditions associated with each PTF vessel and the associated ancillary equipment. Design provisions for control of these hazards are listed in the PSAR and the individual System Descriptions. The UFP System Description identifies the only safety function for ancillary equipment as providing primary confinement of the wastes during normal operations, upset conditions and during and after a SC-I/II Design Basis Seismic Event. Ancillary equipment that must remain functional during and after a design earthquake is Quality Level (QL-1) and Seismic Category (SC-I). This ancillary equipment includes the main process transfer lines located below the UFP tank overflow levels and the ancillary equipment required to provide for post earthquake hydrogen control in vessels UFP-VSL-00001A/B and UFP-VSL-00002A/B.
	Ancillary equipment is designed to handle the wastes with the characteristics defined above and any treatment reagents.	24590-WTP-PER-M-02-002, Rev 0, Materials for Ancillary Equipment; 24590-PTF-N1D-UFP-P0001, Rev. 0, Vessel/Tank Material Selection Data Sheet, UFP-BRKPT-00001A/B (PTF) Ultrafiltration Recycle Breakpot; 24590-PTF-N1D-UFP-P0002, Rev. 0 Plant Item Material Selection Data Sheet, UFP-PP-00001, 2, 3 A/B (PTF) Ultrafilter Pulsepots; System Description and SDCN listed above under References	The System Description indicates that the UFP system removes entrained solids and Sr (strontium)/TRU (Transuranic elements) from a combined HLW and LAW feed that meets certain envelope definitions. A partial listing of the reagents used in this process includes Sodium Hydroxide, Nitric Acid, Sodium Permanganate and Strontium Nitrate. The Materials for Ancillary Equipment document requires that the material selection and corrosion/erosion allowances for ancillary equipment in contact with the waste will be equal to or better than the material and corrosion allowance of the waste source vessel. Material selection for the UFP Breakpots is documented in the Vessel/Tank Material Selection Data Sheet. Material selection for the UFP Pulsepots is documented in the Plant Item Material Selection Data Sheet.

	Information Assessed	Source of Information	Discussion
Compatibility	The pH range of the waste, waste temperature and the corrosion behavior of the structural materials are adequately addressed. Ancillary equipment material and protective coatings ensure the ancillary equipment structure is adequately protected from the corrosive effects of the waste stream and external environments. The protection is sufficient to ensure the equipment will not leak or fail for the design life of the system.	System Description and SDCN listed above under References; 24590-WTP-DB-ENG-01-001, Rev 1, Basis of Design; 24590-WTP-PER-M-02-002, Rev 0, Materials for Ancillary Equipment; 24590-PTF-N1D-UFP-P0001, Rev. 0, Vessel/Tank Material Selection Data Sheet, UFP-BRKPT-00001A/B (PTF) Ultrafiltration Recycle Breakpot; 24590-PTF-N1D-UFP-P0002, Rev. 0 Plant Item Material Selection Data Sheet, UFP-PP-00001, 2, 3 A/B (PTF) Ultrafilter Pulsepots; 24590-WTP-3PS-NN00-T0001, Rev 0, Engineering Specification for Hot and Anti-Sweat Thermal Insulation	The Basis of Design identifies a service design life of 40 years for the ancillary equipment. All non-maintainable items will be designed to last the life of the facility. Detailed material selection (corrosion) analyses are conducted for each vessel in the PTF during process design. The Materials for Ancillary Equipment document requires that the material selection and corrosion/erosion allowances for ancillary equipment in contact with the waste will be equal to or better than the material and corrosion allowance of the waste source vessel. Material selection considerations for the Breakpots are documented in the Vessel/Tank Material Selection Data Sheet. Material selection considerations for the Pulsepots are documented in the Plant Item Material Selection Data Sheet. The Thermal Insulation specification requires that all insulating materials used on the outside of ancillary equipment be pre-approved for use on austenitic stainless steel in accordance with applicable ASTM procedures and tests to preclude external corrosion of ancillary equipment. Corrosion allowances are considered for all ancillary equipment, therefore, the ancillary equipment will provide the expected design service life.

	Information Assessed	Source of Information	Discussion
Corrosion Allowance	Corrosion allowance is adequate for the intended service life of the ancillary equipment.	Drawings listed above under References; 24590-WTP-DC-PS-01-001, Rev. 2, Pipe Stress Design Criteria including "Pipe Stress Criteria"and "Span Method Criteria"; 24590-WTP-DB-ENG-01-001, Rev 1, Basis of Design; 24590-WTP-PER-M-02-002, Rev 0, Materials for Ancillary Equipment; 24590-WTP-PER-PL-02-001, Rev. 2, Piping Material Class Description; Vessel/Tank Material Selection Data Sheet, UFP-BRKPT-00001A/B (PTF) Ultrafiltration Recycle Breakpot; 24590-PTF-N1D-UFP-P0002, Rev. 0 Plant Item Material Selection Data Sheet, UFP-PP-00001, 2, 3 A/B (PTF) Ultrafilter Pulsepots	The Pipe Stress Design Criteria document requires use of the ASME B31.3 Code for ancillary equipment design. Consideration of corrosion, including corrosion allowance, is a mandatory requirement of ASME B31.3. A required service life of 40 years is identified in the Basis of Design for ancillary equipment located in the central hot cell and adjacent inaccessible process cells. Detailed material selection (corrosion) analyses are conducted for each vessel in the PTF during process design. The Materials for Ancillary Equipment document requires that downstream ancillary equipment is to be constructed of equal or better materials than the source vessel, and with the same corrosion allowance as the source vessel. Bounding corrosion allowances are listed for each piping material class in the Piping Material Class Description document. The Vessel/Tank Material Selection Data Sheet for the UFP system Breakpots identifies the preferred Breakpot material and a recommended corrosion allowance. The Breakpots are equipped with internal wash rings for decontamination purposes as noted on the Process Flow Diagram. The Plant Item Material Selection Data Sheet identifies the preferred Pulsepot material and a recommended corrosion allowance.
Strength	Pressure controls (vents and relief valves) are adequately designed to ensure pressure relief if normal operating pressures in the vessels are exceeded.	Drawings listed above under References; 24590-WTP-DC-PS-01-001, Rev. 2, Pipe Stress Design Criteria including "Pipe Stress Criteria"and "Span Method Criteria"	The Pipe Stress Design Criteria document specifies use of ASME B31.3 as the design code for the WTP piping. ASME B31.3 requires provision be made to safely contain or relieve any pressure to which the piping may be subjected. ASME B31.3 piping not protected by a pressure relieving device, or that can be isolated from a pressure reliving device must be designed for at least the highest pressure that can be developed.

	Information Assessed	Source of Information	Discussion
Strength	Maximum flows and any unusual operating stresses are identified	Drawings listed above under References; 24590-WTP-DC-PS-01-001, Rev 2, Pipe Stress Design Criteria including "Pipe Stress Criteria"and "Span Method Criteria"; 24590-WTP-PER-PL-02-001, Rev. 2, Piping Material Class Description	The expected flow paths for the ancillary equipment are identified on the P&ID drawings. The Pipe Stress Design Criteria document specifies the ASME B31.3 code for piping design. This code requires piping to be designed to the highest pressure that can be developed in a piping system assuring that maximum operating stresses remain within code allowables. The Piping Material Class Description document lists the bounding pressure and temperature limits for each piping material class.
Secondary Containment	Ancillary equipment is designed with secondary containment that is constructed of materials compatible with the waste and of sufficient strength to prevent failure (pressure gradients, waste, climatic conditions, daily operations), provided with a leak-detection system, and designed to drain and remove liquids.	Drawings and System Description listed above under References; 24590-WTP-DB-ENG-01-001, Rev 1, Basis of Design	The ancillary equipment considered in this assessment is located in a central hot cell, adjacent inaccessible process cells, and surrounding R2/C3 platform areas at various elevations within the Pretreatment facility. Secondary containment for ancillary equipment within the cells is provided by the liners and sumps within the cells which are outside the scope of this integrity assessment. Secondary containment for ancillary equipment located in R2/C3 areas is provided by special protective coatings, curbs, and sumps or regulated drain systems which are also outside the scope of this integrity assessment. The Basis of Design specifies: "All secondary containments will be provided with drains and leak detection systems for detection of primary containment leaks."

Bechtel National, Inc.

Job No. 24590

SUPPLIER DOCUMENT STATUS

1. [X] **Work may proceed.**
2. [ ] **Revise and resubmit. Work may proceed subject to resolution of indicated comments.**
3. [ ] **Revise and resubmit. Work may not proceed.**
4. [ ] **Review not required. Work may proceed.**

Permission to proceed does not constitute acceptance or approval of design details, calculations, analyses, test methods, or materials developed or selected by the supplier and does not relieve supplier from full compliance with contractual obligations.

REVIEWED										

G-321 Document Category N/A
[From Supplement A to G-321-E (E) or G-321-V (V), as applicable, or "N/A" if SSRS is used]

Supersedes BNI Document No. N/A Rev. _____
[When applicable]

Accepted by DC Pfluger (Print Name) DC Pfluger (Signature) 1/26/03 (Date)

Released by N/A (Print Name) _____ (Signature) _____ (Date)
[When applicable]

416 GP&S 7-03

24590-CM-HC4-HXYG-00138-02-09

REV. 00A

PURCHASE ORDER SUBMITTAL

R10192423

COGEMA-IA-024, Rev. 0

IQRPE REVIEW – PRETREATMENT FACILITY HLW LAG STORAGE AND FEED BLENDING PROCESS SYSTEM (HLP) ANCILLARY EQUIPMENT

"I, John T. Baxter, have reviewed, and certified a portion of the design of a new tank system or component located at the Hanford Waste Treatment Plant, owned/operated by Department of Energy, Office of River Protection, Richland, Washington. My duties were independent review of the current design for the Pretreatment Facility HLW Lag Storage and Feed Blending Process System (HLP) Ancillary Equipment as required by the Dangerous Waste Regulations, namely, WAC 173-303-640(3) applicable paragraphs, i.e., (a) through (g)."

"I certify under penalty of law that I have personally examined and am familiar with the information submitted in this document and all attachments and that, based on my inquiry of those individuals immediately responsible for obtaining the information, I believe that the information is true, accurate, and complete. I am aware that there are significant penalties for submitting false information, including the possibility of fine and imprisonment."

The documentation reviewed indicate that the design intent fully satisfies the requirements of the WAC.

The attached review is eight (8) sheets numbered one (1) through eight (8).

RPP-WTP
RECEIVED
JAN 22 2004
BY PDC

JOHN T. BAXTER
STATE OF WASHINGTON
18978
REGISTERED
PROFESSIONAL ENGINEER
EXPIRES: 10/28/04

John T. Baxter
Signature

January 21, 2004
Date

24590-CM-HC4-HXYG-00138-02-09, REV. 00A

STRUCTURAL INTEGRITY ASSESSMENT OF THE PRETREATMENT FACILITY HLW LAG STORAGE AND FEED BLENDING PROCESS SYSTEM (HLP) ANCILLARY EQUIPMENT

COGEMA-IA-024
REV. 0

Please note that source, special nuclear and byproduct materials, as defined in the Atomic Energy Act of 1954 (AEA), are regulated at the U.S. Department of Energy (DOE) facilities exclusively by DOE acting pursuant to its AEA authority. DOE asserts, that pursuant to the AEA, it has sole and exclusive responsibility and authority to regulate source, special nuclear, and byproduct materials at DOE-owned nuclear facilities. Information contained herein on radionuclides is provided for process description purposes only.

Scope	Scope of this Integrity Assessment	This integrity assessment includes: a. Ancillary equipment associated with the HLP System HLW Lag Storage and Blending Process Vessels(HLP-VSL-00027A/B) as shown on drawing No. 24590-PTF-M6-HLP-P0001, Rev. 1; b. Ancillary equipment associated with the HLP System HLW Feed Receipt Vessel (HLP-VSL-00022) as shown on drawing No. 24590-PTF-M6-HLP-P0002, Rev. 1; c. Ancillary equipment associated with the HLP System HLW Lag Storage and Feed Blending Process System Vessel (HLP-VSL-00028) as shown on drawing No. 24590-PTF-M6-HLP-P0003, Rev. 1. d. Ancillary equipment associated with HLP System Plant Service Air Rack drawings 24590-PTF-M6-HLP-P0005, Rev.0, 24590-PTF-M6-HLP-P0006, Rev.0 and 24590-PTF-M6-HLP-P0007, Rev.0; e. Ancillary equipment associated with HLP System Plant Wash Rack drawings 24590-PTF-M6-HLP-P0009, Rev.0 and 24590-PTF-M6-HLP-P0010, Rev.0.
References	Drawings and Plant Item Material Selection Data Sheet	24590-PTF-M6-HLP-P0001, Rev. 1, P&ID – PTF HLP System HLW Lag Storage and Blending Process Vessel HLP-VSL-00027A/B (Q); 24590-PTF-M6-HLP-P0002, Rev. 1, P&ID – PTF HLP System HLW Feed Receipt Vessel HLP-VSL-00022 (Q); 24590-PTF-M6-HLP-P0003, Rev. 1, P&ID – PTF HLP System HLW Feed Blending Process Vessel HLP-VSL-00028 (Q); 24590-PTF-M6-HLP-P0005, Rev. 0, P&ID – PTF HLP System HLW Lag Storage and Feed Blending Utility Services - PSA Rack (Q); 24590-PTF-M6-HLP-P0006, Rev. 0, P&ID – PTF HLP System HLW Lag Storage and Feed Blending Utility Services - PSA Rack (Q); 24590-PTF-M6-HLP-P0007, Rev. 0, P&ID – PTF HLP System HLW Lag Storage and Feed Blending Utility Services - PSA Rack (Q); 24590-PTF-M6-HLP-P0009, Rev. 0, P&ID – PTF HLW Lag Storage & Feed Blending Utility Services - Plant Wash Rack (Q); 24590-PTF-M6-HLP-P0010, Rev. 0, P&ID – PTF HLW Lag Storage & Feed Blending Utility Services Plant Wash Rack (Q); Plant Item Material Selection Data Sheet, 24590-PTF-N1D-HLP-P0001, Rev. 0, Cs Concentrate Receipt Breakpots, HLP-BRKPT-00004 & HLP-BRKPT-00006 (PTF)

Summary of Assessment

For each item of "Information Assessed" (i.e., Criteria) on the following pages, the items listed under "Source of Information" were reviewed and found to furnish adequate design controls and requirements to assure the design intent fully satisfies the WAC requirements.

	Information Assessed	Source of Information	Discussion
Design	Ancillary equipment design standards are appropriate and adequate for the equipment's intended use.	24590-WTP-DC-PS-01-001, Rev 2, Pipe Stress Design Criteria including "Pipe Stress Criteria" and "Span Method Criteria"; Drawings listed above under References; ASME B31.3 Code, Process Piping, 1996 Edition, American Society of Mechanical Engineers	The Pipe Stress Design Criteria document identifies ASME B31.3 as the design code for piping systems of the WTP. The P&ID drawings show the process piping which has a containment function as Seismic Category (SC-I) and Quality Level (QL-1). The "important to safety" plant service air equipment which must function in post Design Basis Earthquake conditions is Seismic Category (SC-I) and Quality Level (QL-1). Ancillary equipment associated with the Pulse Jet Ventilation (PJV) system is Seismic Category (SC-II) and Quality Level (QL-2) as shown on the Plant Service Air (PSA) Rack P&ID drawings (P0005 through P0007). Plant Wash Rack ancillary equipment shown on P&ID drawings (P0009 and P0010) is Commercial grade and Seismic Category (SC-III). These seismic categories are discussed in detail in the Pipe Stress Design Criteria document. These codes and standards are acceptable and adequate for the design of the HLP system ancillary equipment for the intended service.
	If the ancillary equipment to be used is not built to a design standard, the design calculations demonstrate sound engineering principles of construction.	24590-WTP-DC-PS-01-001, Rev 2, Pipe Stress Design Criteria including "Pipe Stress Criteria" and "Span Method Criteria"	The ancillary equipment is built to design standards. The Pipe Stress Design Criteria document specifies that piping is to be designed in accordance with ASME B31.3.

	Information Assessed	Source of Information	Discussion
Design	Ancillary equipment has adequate strength at the end of its design life to withstand the operating pressure, operating temperature, thermal expansion, and seismic loads. Equipment is protected against physical damage and excessive stress due to settlement, vibration, expansion, or contraction.	24590-WTP-DC-PS-01-001, Rev 2, Pipe Stress Design Criteria including "Pipe Stress Criteria" and "Span Method Criteria"; ASME Boiler and Pressure Vessel (B&PV) Code, Section III, Rules for Construction of Nuclear Facility Components, Division 1, Subsection NC, Appendix N and Appendix F, 1995; Uniform Building Code (UBC), 1997 Edition, International Conference of Building Officials; 24590-WTP-PER-M-02-002, Rev 0, Materials for Ancillary Equipment; 24590-WTP-DB-ENG-01-001, Rev 1A, Basis of Design	The Pipe Stress Design Criteria document requires the use of the ASME B31.3 Code for piping design. ASME B31.3 requires explicit consideration of operating pressure, operating temperature, thermal expansion/contraction, settlement, vibration, and corrosion allowance in the design of piping. Elements of the ASME B&PV Code, Section III, Division1, Subsection NC, Appendix N and Appendix F are used to supplement the requirements of ASME B31.3 for seismic design of SC-I/SC-II piping. Similarly, ASME B&PV Code, Section III, Division 1, Subsection NC and Appendix F, and the Uniform Building Code (UBC) are used to supplement the requirements of ASME B31.3 for seismic design of SC-III/SC-IV piping. Details of the seismic design methods are discussed in the Pipe Stress Design Criteria document. The Basis of Design document specifies that mechanical equipment is to be designed for a nominal plant life of 40 years. Components in non-maintainable areas are to be designed to last the entire design life of the plant. The Materials for Ancillary Equipment document specifies that ancillary equipment downstream of a waste source vessel is to be constructed of the same or better material and with the same corrosion allowance as the source vessel itself. Using the same or better materials and corrosion allowance for downstream ancillary equipment ensures that the equipment will be able to withstand all anticipated loadings for the entire design service life.

	Information Assessed	Source of Information	Discussion
Supports	Ancillary equipment supports are adequately designed.	24590-WTP-DC-PS-01-002, Rev 2, Pipe Support Design Criteria; 24590-WTP-PER-PS-02-001, Rev. 4, Ancillary Equipment Pipe Support Design; 24590-WTP-PL-PS-01-001, Rev 1, Verification and Validation Test Plan for Bechtel's ME150 Pipe Support Family of Programs (PCFAPPS)	The Pipe Support Design Criteria document considers all loadings identified in ASME B31.3 and utilizes ASME Section III, Division 1, Subsection NF and Appendix F to supplement the requirements of ASME B31.3 for seismic design of SC-I/II and SC-III/IV pipe supports. Loads are evaluated against the design criteria provided in ASME Section III as discussed in the Pipe Support Design Criteria document. Bounding load cases are passed to the pipe support designers from the results of the ancillary equipment piping stress analyses. Analysis is by manual calculation or approved computer programs that have been verified and validated. These are appropriate codes and standards that assure adequate design of ancillary equipment supports for the HLP system. Ancillary equipment supports are to be designed to allow a minimum of heat to be transferred to the building structures (building structures not to exceed 150 deg F for concrete and 200 deg F for steel). Design standards for vessel internal equipment supports are discussed in the integrity assessment for the HLP system vessels.
Connections	Seams and connections are adequately designed.	24590-WTP-DB-ENG-01-001, Rev 1A, Basis of Design; 24590-WTP-DC-PS-01-001, Rev 2, Pipe Stress Design Criteria including "Pipe Stress Criteria" and "Span Method Criteria"; ASME Boiler and Pressure Vessel Code, Section IX, Welding and Brazing Qualifications; 24590-WTP-3PS-PF00-T0001, Rev. 1, Engineering Specification for Process Jumper Fabrication for PT and HLW	The Basis of Design specifies that in-cell piping that is non-maintainable will be fully welded. The Pipe Stress Design Criteria specifies the ASME B31.3 Process Piping design code for the piping systems. Welding is to be performed in accordance with the requirements of ASME B31.3 and the ASME B&PV Code, Section IX. ANSI B 16.5 is specified for pipe flanges and equipment flanges where flanges are used for connections. Remote handled piping connections in the central hot cell are made using jumpers fabricated in accordance with the Engineering Specification for Process Jumper Fabrication for PT and HLW. These are appropriate codes and standards for design and fabrication of the HLP system ancillary equipment.

	Information Assessed	Source of Information	Discussion
Frost Heave	The system will withstand the effects of frost heave.	24590-PTF-3YD-HLP-00001, Rev. 0, System Description for HLW Lag Storage and Feed Blending Process System (HLP); SDCN No. PTF-3YM-HLP-00001 for System Description No. 24590-PTF-3YD-HLP-00001; 24590-WTP-DC-ST-01-001, Rev. 1, Structural Design Criteria	The HLP system ancillary equipment considered in this assessment is located in a central hot cell, adjacent inaccessible process cells, and surrounding R2/C3 areas which are located inside the Pretreatment Facility. The Structural Design Criteria requires that all structural foundations shall extend into the surrounding soil below the frost line in order to preclude frost heave. The frost line is 30 in. below grade. Therefore the HLP system ancillary equipment is not subject to the effects of frost heave.
Waste Characteristics	Characteristics of the waste to be stored or treated have been identified (ignitable, reactive, toxic, specific gravity, vapor pressure, flash point, temperature)	Drawings listed above under references. 24590-WTP-PSAR-ESH-01-002-02, Rev. 1, Preliminary Safety Analysis Report (PSAR) to Support Construction Authorization; PT Facility Specific Information; 24590-PTF-3YD-HLP-00001, Rev. 0, System Description for HLW Lag Storage and Feed Blending Process System (HLP); SDCN No. PTF-3YM-HLP-00001 for System Description No. 24590-PTF-3YD-HLP-00001	The HLP vessels provide for receipt and staging of slurry wastes from the DOE, lag storage of intermediate HLW separation products, and blending of the final feed for transfer to the HLW Vitrification Facility. The PSAR provides a summary of potential hazardous conditions associated with the PTF HLP system vessels and ancillary equipment. The System Description identifies the main important-to-safety function for the ancillary equipment to be provide primary confinement of the wastes during normal operations, upset conditions and during and after a SC-I/II Design Basis Earthquake. Ancillary equipment integrity is also necessary to provide continued important-to-safety functions for the HLP vessels including hydrogen dilution, waste cooling and waste containment. Plant Service Air must function to operate Pulse Jet Mixers for hydrogen control in the system vessels. Plant Service Air must be available for continued operation of the Pretreatment Vessel Vent Process System (PVP). This system must be available for control of vessel offgas and hydrogen buildup. The PVP system includes the important-to-safety air supply for the Passive Air Purge hydrogen control system used during post-Design Basis Earthquake conditions.

	Information Assessed	Source of Information	Discussion
Waste Char.	Ancillary equipment is designed to handle the wastes with the characteristics defined above and any treatment reagents.	24590-PTF-3YD-HLP-00001, Rev. 0, System Description for HLW Lag Storage and Feed Blending Process System (HLP); SDCN No. PTF-3YM-HLP-00001 for System Description No. 24590-PTF-3YD-HLP-00001	The System Description indicates that the HLP vessels are used only for lag storage and feed blending of HLW. Treatment reagents are not used in these vessels and ancillary equipment during normal operations.
Compatibility	The pH range of the waste, waste temperature and the corrosion behavior of the structural materials are adequately addressed. Ancillary equipment material and protective coatings ensure the ancillary equipment structure is adequately protected from the corrosive effects of the waste stream and external environments. The protection is sufficient to ensure the equipment will not leak or fail for the design life of the system.	24590-WTP-DB-ENG-01-001, Rev 1A, Basis of Design; 24590-PTF-3YD-FRP-00001, Rev. 0, System Description for HLW Lag Storage and Feed Blending Process System (HLP); SDCN No. PTF-3YM-HLP-00001 for System Description No. 24590-PTF-3YD-HLP-00001; 24590-WTP-PER-M-02-002, Rev 0, Materials for Ancillary Equipment; Plant Item Material Selection Data Sheet, 24590-PTF-N1D-HLP-P0001, Rev. 0, Cs Concentrate Receipt Breakpots, HLP-BRKPT-00004 & HLP-BRKPT-00006 (PTF); 24590-WTP-3PS-NN00-T0001, Rev 0, Engineering Specification for Hot and Anti-Sweat Thermal Insulation	The Basis of Design identifies a service design life of 40 years for the ancillary equipment. All non-maintainable items will be designed to last the life of the facility. The System Description identifies that the waste to be handled in this ancillary equipment may have up to 25 wt% solids content. The Materials for Ancillary Equipment document requires that the material selection and corrosion/erosion allowances for ancillary equipment in contact with the waste will be equal to or better than the material and corrosion allowance of the waste source vessel. Because of the more severe process conditions, a separate material selection evaluation has been made for the HLP system breakpots. This is documented in the Plant Item Material Selection Data Sheet for the breakpots. The Thermal Insulation specification requires that all insulating materials used on the outside of ancillary equipment be pre-approved for use on austenitic stainless steel in accordance with applicable ASTM procedures and tests to preclude external corrosion of ancillary equipment. Therefore, the ancillary equipment will provide the expected design service life.

	Information Assessed	Source of Information	Discussion
Corrosion Allowance	Corrosion allowance is adequate for the intended service life of the ancillary equipment.	24590-WTP-DC-PS-01-001, Rev 2, Pipe Stress Design Criteria including "Pipe Stress Criteria" and "Span Method Criteria"; 24590-WTP-DB-ENG-01-001, Rev 1A, Basis of Design; 24590-WTP-PER-M-02-002, Rev 0, Materials for Ancillary Equipment; Plant Item Material Selection Data Sheet, 24590-PTF-N1D-HLP-P0001, Rev. 0, Cs Concentrate Receipt Breakpots, HLP-BRKPT-00004 & HLP-BRKPT-00006 (PTF)	The Pipe Stress Design Criteria requires use of the ASME B31.3 Code for ancillary equipment design. Consideration of corrosion, including corrosion allowance, is a mandatory requirement of ASME B31.3. A required service life of 40 years is identified in the Basis of Design for ancillary equipment located in inaccessible process cells. An appropriate corrosion allowance for a 40 year service life is identified in the material selection documents for vessels HLP-VSL-00022, -00027A, -00027B and -00028. The Materials for Ancillary Equipment document requires that downstream ancillary equipment is to be constructed of equal or better materials than the source vessel, and with the same corrosion allowance as the source vessel including any additional erosion allowance where appropriate. Because of the more severe process conditions, a separate material selection evaluation has been made for the HLP system breakpots. This is documented in the Plant Item Material Selection Data Sheet for the breakpots which includes a recommended corrosion allowance..
Strength	Pressure controls (vents and relief valves) are adequately designed to ensure pressure relief if normal operating pressures in the vessels are exceeded.	P&ID drawings listed under references above. 24590-WTP-DC-PS-01-001, Rev 2, Pipe Stress Design Criteria including "Pipe Stress Criteria" and "Span Method Criteria"	The Pipe Stress Design Criteria document specifies ASME B31.3 as the design code for the WTP piping. ASME B31.3 requires provision be made to safely contain or relieve any pressure to which the piping may be subjected. ASME B31.3 piping not protected by a pressure relieving device, or that can be isolated from a pressure relieving device must be designed for at least the highest pressure that can be developed.
	Maximum flows and any unusual operating stresses are identified	P&ID drawings listed under references above. 24590-WTP-DC-PS-01-001, Rev 2, Pipe Stress Design Criteria including "Pipe Stress Criteria" and "Span Method Criteria"; 24590-WTP-PER-PL-02-001, Rev. 3 Piping Material Class Description	The expected flow paths for the ancillary equipment are shown on the P&ID drawings. The Pipe Stress Design Criteria document specifies the ASME B31.3 code for piping design. This code requires piping to be designed to the highest pressure that can be developed in a piping system assuring that maximum operating stresses remain within code allowables. Piping material classes are shown on the P&ID drawings. The Piping Material Class Description document lists the enveloping pressure and temperature limits for each piping material class.

	Information Assessed	Source of Information	Discussion
Secondary Containment	Ancillary equipment is designed with secondary containment that is constructed of materials compatible with the waste and of sufficient strength to prevent failure (pressure gradients, waste, climatic conditions, daily operations), provided with a leak-detection system, and designed to drain and remove liquids.	P&ID drawings listed under references above. 24590-PTF-3YD-HLP-00001, Rev. 0, System Description for HLW Lag Storage and Feed Blending Process System (HLP); SDCN No. PTF-3YM-HLP-00001 for System Description No. 24590-PTF-3YD-HLP-00001; 24590-WTP-DB-ENG-01-001, Rev 1A, Basis of Design	The ancillary equipment considered in this assessment is located in a central hot cell, adjacent inaccessible process cells and surrounding R2/C3 areas within the Pretreatment Facility. Secondary containment for ancillary equipment within the hot cell and process cells is provided by the liners and sumps within the cells which are outside the scope of this integrity assessment. Secondary containment in the R2/C3 areas is provided by special protective coatings, curbs and regulated drain systems which are also outside the scope of this integrity assessment. All secondary containments will be provided with drains and leak detection systems for detection of primary containment leaks as discussed in the Basis of Design document.

Job No. 24590

Bechtel National, Inc.

SUPPLIER DOCUMENT STATUS

1. [X] Work may proceed.
2. [ ] Revise and resubmit. Work may proceed subject to resolution of indicated comments.
3. [ ] Revise and resubmit. Work may not proceed.
4. [ ] Review not required. Work may proceed.

Permission to proceed does not constitute acceptance or approval of design details, calculations, analyses, test methods, or materials developed or selected by the supplier and does not relieve supplier from full compliance with contractual obligations.

REVIEWED										

G-321 Document Category N/A
[From Supplement A to G-321-E (E) or G-321-V (V), as applicable, or "N/A" if SSRS is used]

Supersedes BNI Document No. N/A Rev. _____
[When applicable]

Accepted by DC Pfluger (Print Name) DC Pfluger (Signature) 1/26/04 (Date)

Released by N/A (Print Name) _____ (Signature) _____ (Date)
[When applicable]

416 GP&S 7-03

CT 1/23/04

24590-CM-HC4-HXYG-00138-02-10

REV. 00A

PURCHASE ORDER SUBMITTAL

R10192424

COGEMA-IA-023, Rev. 0

IQRPE REVIEW - PRETREATMENT FACILITY (PTF) HLW LAG STORAGE AND FEED BLENDING PROCESS SYSTEM (HLP) VESSELS HLP-VSL-00022, 00027A/B, AND 00028

"I, John T. Baxter have reviewed, and certified a portion of the design of a new tank system or component located at the Hanford Waste Treatment Plant, owned/operated by Department of Energy, Office of River Protection, Richland, Washington. My duties were independent review of the current design for the Pretreatment Facility (PTF) HLW Lag Storage and Feed Blending Process System (HLP) Vessels HLP-VSL-00022, -00027A/B, and -00028 as required by The Dangerous Waste Regulations, namely, WAC 173-303-640(3) applicable paragraphs, i.e., (a) through (g)."

"I certify under penalty of law that I have personally examined and am familiar with the information submitted in this document and all attachments and that, based on my inquiry of those individuals immediately responsible for obtaining the information, I believe that the information is true, accurate, and complete. I am aware that there are significant penalties for submitting false information, including the possibility of fine and imprisonment."

The documentation reviewed indicate that the design intent fully satisfies the requirements of the WAC.

The attached review is six (6) sheets numbered one (1) through six (6).

RPP-WTP
RECEIVED
JAN 22 2004
BY PDC

JOHN T. BAXTER
STATE OF WASHINGTON
18978
REGISTERED
PROFESSIONAL ENGINEER

EXPIRES: 10/28/04

John T. Baxter
Signature

January 21, 2004
Date

24590-CM-HC4-HXYG-00138-02-10, REV. 00A

STRUCTURAL INTEGRITY ASSESSMENT OF THE PRETREATMENT FACILITY (PTF) HLW LAG STORAGE AND FEED BLENDING PROCESS SYSTEM (HLP) VESSELS HLP-VSL-00022, 00027A/B, AND 00028

COGEMA-IA-023
Rev. 0

Please note that source, special nuclear and byproduct materials, as defined in the Atomic Energy Act of 1954 (AEA), are regulated at the U.S. Department of Energy (DOE) facilities exclusively by DOE acting pursuant to its AEA authority. DOE asserts, that pursuant to the AEA, it has sole and exclusive responsibility and authority to regulate source, special nuclear, and byproduct materials at DOE-owned nuclear facilities. Information contained herein on radionuclides is provided for process description purposes only.

Scope	Scope of this Integrity Assessment	The scope of this integrity assessment includes the Pretreatment Facility (PTF) High Level Waste (HLW) Lag Storage and Feed Blending Process System (HLP) Vessels. These are vessels HLP-VSL-00022, HLP-VSL-00027A, HLP-VSL-00027B and HLP-VSL-00028. The primary function of the HLP System vessels is to receive and stage HLW feed from the U. S. Department of Energy, and to receive and stage HLW intermediate products (i.e. treated solids and Sr/TRU precipitates), and to blend these products prior to transfer to the HLW Vitrification Facility.
References	Drawings, Mechanical Data Sheets, Vessel/Tank Material Selection Data Sheets, and System Description	24590-PTF-M5-V17T-P0007, Rev. 0, Process Flow Diagram HLW Feed Receipt System HLP; 24590-PTF-M5-V17T-P0008, Rev. 0, Process Flow Diagram HLW Lag Storage And Feed Blending System HLP; 24590-PTF-MV-HLP-P0003, Rev. 0, Equipment Assembly HLW Feed Receipt Vessel HLP-VSL-00022; 24590-PTF-MV-HLP-P0006, Rev. 0, Equipment Assembly HLW Lag Storage Vessel HLP-VSL-00027A; 24590-PTF-MV-HLP-P0005, Rev. 0, Equipment Assembly HLW Lag Storage Vessel HLP-VSL-P0027B; 24590-PTF-MV-HLP-P0004, Rev. 0, Equipment Assembly HLW Feed Blending Vessel HLP-VSL-00028; Mechanical Data Sheet 24590-PTF-MVD-HLP-P0006, Rev. 1, HLW Feed Receipt Vessel HLP-VSL-00022; Mechanical Data Sheet 24590-PTF-MVD-HLP-P0007, Rev. 1, HLW Lag Storage Vessel HLP-VSL-00027A; Mechanical Data Sheet 24590-PTF-MVD-HLP-P0008, Rev. 1, HLW Lag Storage Vessel HLP-VSL-00027B; Mechanical Data Sheet 24590-PTF-MVD-HLP-P0009, Rev. 1, HLW Feed Blending Vessel HLP-VSL-00028; Vessel/Tank Material Selection Data Sheet, 24590-PTF-N1D-HLP-P0003, Rev. 0, HLW Feed Receipt Vessel HLP-VSL-00022 (PTF); Vessel/Tank Material Selection Data Sheet, 24590-PTF-N1D-HLP-P0007, Rev. 1, HLW Lag Storage Vessel HLP-VSL-00027A&B (PTF); Vessel/Tank Material Selection Data Sheet, 24590-PTF-N1D-HLP-P0010, Rev. 1, HLW Feed Blending Vessel HLP-VSL-00028 (PTF); 24590-PTF-3YD-HLP-00001, Rev. 0, System Description for HLW Lag Storage and Feed Blending Process System (HLP); System Description Change Notice (SDCN) SDCN No. PTF-3YM-HLP-00001 for System Description No. 24590-PTF-3YD-HLP-00001

Summary of Assessment

For each item of "Information Assessed" (i.e., Criteria) on the following pages, the items listed under "Source of Information" were reviewed and found to furnish adequate design controls and requirements to assure the design intent fully satisfies the WAC requirements.

	Information Assessed	Source of Information	Discussion
Design	Vessel design standards are appropriate and adequate for the vessel's intended use.	See Equipment Assembly drawings and Mechanical Data Sheets for Vessels HLP-VSL-00022, -00027A, -00027B and -00028 listed above; 24590-WTP-3PS-MV00-TP001, Rev. 1, Engineering Specification for Pressure Vessel Design and Fabrication	The Engineering Specification for Pressure Vessel Design and Fabrication requires that the PTF HLW Lag Storage and Feed Blending vessels (HLP-VSL-00022, -00027A, -00027B and -00028) and all vessel appurtenances are to be designed to ASME Section VIII, Division 1 rules. These design requirements are appropriate for unfired pressure vessels operating with aqueous mixed waste solutions over the pressure and temperature ranges specified for these vessels. Supplementary requirements are specified in the Engineering Specification for Pressure Vessel Design and Fabrication. These supplementary requirements address pressure vessel fatigue analysis, positive material identification, standard fabrication tolerances, acceptable welding procedures for the vessel and appurtenances, welder qualifications and testing records, NDE inspections and records, quality assurance requirements, and packaging, shipping, handling and storage requirements . These are adequate and acceptable codes and standards for these Quality Level (QL-1), Seismic Category (SC-I) vessels. The PTF HLW Lag Storage and Feed Blending vessels are vertical vessels with IDs ranging from 25' to 38'. Vessel vertical lengths range from approximately 24' to 29' tangent to tangent and all the vessels are supported on cylindrical skirts. Top and bottom heads are torispherical with radii equal to the tank IDs. The shells, heads and skirts are to have minimum thicknesses of 1 in. to 1 1/4 in. Materials for the shells, heads and appurtenances are to be SA-240 316 dual certified stainless steel. Dual certified 316 stainless steel meets the chemistry requirements of specification SA 240 316L and the mechanical requirements of specification SA240 316. This material is hereinafter referred to as SA240 316L stainless steel. The maximum operating volumes range from approximately 112,900 gallons for tanks HLP-VSL-00027A&B to approximately 234,500 gallons for tank HLP-VSL-00022.

	Information Assessed	Source of Information	Discussion
Design	If a non-standard vessel is to be used, the design calculations demonstrate sound engineering principles of construction.	24590-WTP-3PS-MV00-TP001, Rev. 1, Engineering Specification for Pressure Vessel Design and Fabrication	The Engineering Specification for Pressure Vessel Design and Fabrication requires that the ASME Section VIII, Division 1 vessels (HLP-VSL-00022, -00027A, -00027B and -00028) be delivered after design, fabrication, inspection and testing with an ASME U stamp and that the vessels be registered with the National Board. They are shop fabricated vessels for mixed waste service in the Pretreatment Facility. As discussed in the item immediately above, the vessel design standards are appropriate and adequate for the vessels' intended uses.
	Vessel has adequate strength, after consideration of the corrosion allowance, to withstand the operating pressure, operating temperature, and seismic loads.	Drawings and Mechanical Data Sheets listed above under References; 24590-WTP-3PS-MV00-TP001, Rev. 1, Engineering Specification for Pressure Vessel Design and Fabrication; 24590-WTP-3PS-MV00-TP002, Rev. 1, Engineering Specification for Seismic Qualification Criteria for Pressure Vessels; 24590-WTP-3PI-SS90-T0001, Rev. 0, Engineering Specification for Seismic Qualification of Seismic Category I/II Equipment and Vessels	The Engineering Specification for Pressure Vessel Design and Fabrication requires consideration of the operating pressures, temperatures, seismic loads, and corrosion allowance in the design process. Supplementary seismic design criteria are specified in the Engineering Specification for Seismic Qualification Criteria for Pressure Vessels to provide for the vessels seismic design analysis. The Mechanical Data Sheets identify each vessel's operating pressure and temperature ranges, the materials selected for each vessel, the corrosion allowance selected for each vessel, and the requirements for seismic design of each vessel. The Data Sheets indicate that vessels HLP-VSL-00022, -00027A, -00027B and -00028 are to be analyzed as Seismic Category 1 (SC-I) vessels which requires use of the seismic design analysis and acceptance requirements of ASME Section VIII, Division 2. Details of this analysis methodology are furnished in the Engineering Specification for Seismic Qualification of Seismic Category I/II Equipment and Tanks. The Equipment Assembly drawings specify minimum thicknesses for the vessel shells and heads ranging from 1 in. to 1 1/4 in. These are appropriate requirements and criteria to ensure the vessels have adequate strength to withstand all loads at their end of service life.

	Information Assessed	Source of Information	Discussion
Foundations	Vessel foundation will maintain the load of a full vessel.	See drawings and Material Data Sheets listed above under References; 24590-WTP-3PS-MV00-TP001, Rev. 1, Engineering Specification for Pressure Vessel Design and Fabrication	Cylindrical skirts are specified for each of the vessels with minimum thicknesses of 1 inch of SA240 304 dual certified stainless steel as shown on the equipment assembly drawings and specified in the Material Data Sheets. Dual certified 304 stainless steel meets the chemistry requirements of specification SA 240 304L and the mechanical requirements of specification SA240 304. This thickness is adequate to support the loads of full vessels. A ring beam is included at the base of each of the skirts to spread the vessel loads on the foundation rings and provide for anchor bolting. The Engineering Specification for Pressure Vessel Design and Fabrication requirements provide for adequate vessel foundation designs.
	If in an area subject to flooding, the vessel is anchored.	24590-WTP-3PS-MV00-TP001, Rev. 1, Engineering Specification for Pressure Vessel Design and Fabrication	Buoyant forces of an empty vessel in a flooded room are a standard design load case in this specification for Pressure Vessel Design and Fabrication.
	Vessel system will withstand the effects of frost heave.	System Description and SDCN listed under References above; 24590-WTP-DC-ST-01-001, Rev. 1, Structural Design Criteria	The System Description identifies that vessels HLP-VSL-00022, -00027A, -00027B and -00028 are located in black cells in the Pretreatment Facility. The Structural Design Criteria requires that structural foundations extend into the surrounding soil below the frost line to preclude frost heave. The frost line is located 30" below finished grade. Therefore the HLP vessels will not be subject to frost heave.

	Information Assessed	Source of Information	Discussion
Waste Characteristics	Characteristics of the waste to be stored or treated have been identified (ignitable, reactive, toxic, specific gravity, vapor pressure, flash point, storage temperature)	Mechanical Data Sheets, Vessel/Tank Material Selection Data Sheets, and System Description and SDCN listed above under References; 24590-WTP-PSAR-ESH-01-002-02, Rev 1a, Preliminary Safety Analysis Report (PSAR) to Support Construction Authorization; PT Facility Specific Information	Normal design and operating conditions are listed for vessels HLP-VSL-00022, -00027A, -00027B and -00028 on the Mechanical Data Sheets and in the Vessel/Tank Material Selection Data Sheets. The HLP vessels provide for receipt and staging of slurry wastes from the DOE, lag storage of intermediate HLW separation products, and blending of the final feed for transfer to the HLW Vitrification Facility. The PSAR identifies that all of the system HLP vessels require active mixing and head space purge air flow for flammable hydrogen control. Hydrogen control in the HLP vessels is dependent on availability of the Pulse Jet Mixers to maintain the solids in suspension to prevent potential hydrogen accumulation in slurry layers inside the vessels. The PTF Vessel Vent Process System and a backup forced purge air ventilation system provide for hydrogen control in the HLP vessels during normal operations, abnormal operations, and during post – design basis seismic event conditions as discussed in the PSAR. Each vessel is furnished with a grounding lug to control the discharge of static electricity. The system description specifies that energized electrical sources are not allowed within the main vessel primary boundaries. All of the HLP vessels are equipped with cooling jackets for removal of radiolytically generated heat. All of the HLP vessels use SA 240 316L stainless steel for the containment boundaries which is adequate for this service as discussed in the Vessel/Tank Material Selection Data Sheets.
	Vessel is designed to store or treat the wastes with the characteristics defined above and any treatment reagents.	See Mechanical Data Sheets and Vessel/Tank Material Selection Data Sheets for Vessels HLP-VSL -00022, -00027A, -00027B and -00028 listed above	As noted in the entry above, vessels HLP-VSL-00022, -00027A, -00027B and -00028 are designed to store the waste they receive. The HLP System Description document identifies that the vessels will be used for lag storage and HLW feed blending of primarily caustic waste with small amounts of neutral waste. No additional chemical reagents will be added to the vessels contents for processing during normal operations.
	The waste types are compatible with each other.	System Description and SDCN listed above under References	The primary material handled in vessels HLP-VSL-00022, -00027A, -00027B and -00028 is aqueous HLW feed and pretreated HLW feed at pHs in the range of 13 to 14. These wastes are compatible.

	Information Assessed	Source of Information	Discussion
Corrosion Protection	Vessel material and protective coatings ensure the vessel structure is adequately protected form the corrosive effects of the waste stream and external environments (expected to not leak or fail for the design life of the system)	System Description and SDCN listed above under References; Drawings and Vessel/Tank Material Selection Data Sheets listed above under References	The HLP system description identifies that vessels HLP-VSL-00022, -00027A, -00027B and -00028 will be located in black cells at elevation 0 feet in the PTF. They have design service lives of 40 years because there will not be access for maintenance. The Vessel/Tank Material Selection Data Sheets for these vessels identify the chemical characteristics of the HLW feed and the pretreated HLW feed, the expected operating temperatures, and the anticipated normal operations that will occur in the vessels at pH 13 and above. Based on these parameters, SA 240 316L stainless steel was selected as an appropriate material choice with a recommended corrosion allowance of 0.04 in. for a 40 year service life. As shown on the Equipment Assembly drawings, each of the vessels is equipped with internal spray rings to provide for periodic internal cleaning of the vessels to minimize or eliminate solid waste deposits to limit corrosion.
Corrosion Allowance	Corrosion allowance is adequate for the intended service life of the vessel.	Drawings and Vessel/Tank Material Selection Data Sheets listed above under References	The Vessel/Tank Material Selection Data Sheets specify a uniform corrosion allowance of 0.040 inches for a 40 year vessel life which is adequate for SA 240 316L stainless steel in this waste environment. The materials chosen, welding processes selected, surface preparation, and preservice inspections are appropriate for caustic waste service. As shown on the Equipment Assembly drawings, each of the vessels is equipped with internal spray rings to provide for periodic internal cleaning of the vessels to minimize or eliminate solid waste deposits to limit corrosion.
Pressure Relief	Pressure controls (vents and relief valves) are adequately designed to ensure pressure relief if normal operating pressures in the vessel are exceeded.	Drawings, and System Description and SDCN listed above under References	All of the HLP vessels have unrestricted overflow lines as shown on the Process Flow Diagrams that are routed to PWD-VSL-00033 which is located at a lower elevation in the PTF. The System Description of the HLP processes indicates that all overflow lines are sized to handle the largest possible flow rates into each of the vessels. Nozzle sizes on the Equipment Assembly drawings are consistent with this requirement.

Attachment 51 – Appendix 8.13
Pretreatment Building
Instrument Control Logic and Narrative Descriptions

Where information regarding treatment, management, and disposal of the radioactive source, byproduct material, and/or special nuclear components of mixed waste (as defined by the Atomic Energy Act of 1954, as amended) has been incorporated into this permit, it is not incorporated for the purpose of regulating the radiation hazards of such components under the authority of this permit and chapter 70.105 RCW. In the event of any conflict between Permit Condition III.10.A. and any statement relating to the regulation of source, special nuclear, and byproduct material contained in portions of the permit application that are incorporated into this permit, Permit Condition III.10.A. will prevail.

Additional appendices will be added to this appendix as new information is incorporated into this permit.

Drawings and Documents

Attachment 51 – Appendix 8.13
Pretreatment Building
Instrument Control Logic and Narrative Descriptions

The following drawings have been incorporated into Appendix 8.13 and can be viewed at the Ecology Richland Office. **New drawings are in bold lettering.**

Drawing/Document Number	**Description**
24590-PTF-PER-J-02-002, Rev 0	System Logic Description for FRP System
24590-PTF-PER-J-02-003, Rev 0	System Logic Description for FEP System
24590-PTF-PER-J-02-004, Rev 0	System Logic Description for UFP System
24590-PTF-PER-J-02-005, Rev 0	System Logic Description for CXP System
24590-PTF-PER-J-02-006, Rev 0	System Logic Description for HLP System
24590-PTF-PER-J-02-007, Rev 0	System Logic Description for CNP System
24590-PTF-PER-J-02-010, Rev 0	System Logic Description for TLP System
24590-PTF-PER-J-02-011, Rev 0	System Logic Description for RDP System
24590-PTF-PER-J-02-012, Rev 0	System Logic Description for TCP System
24590-PTF-PER-J-03-001, Rev 0	System Logic Description for RLD System
24590-PTF-PER-J-03-002, Rev 0	System Logic Description for PJV System
24590-PTF-PER-J-03-004, Rev 0	System Logic Description for l PWD System
24590-PTF-PER-J-04-0003, Rev 0	System Logic Description for PVP/PVV System
RESERVED	RESERVED

R10120668

DOCUMENT INFORMATION

The following information is required when submitting a document to PDC for issuance.	**Correspondence (CCN) No:** N/A **Document No:** 24590-PTF-PER-J-02-002 **Rev:** 0

Project Information (Check Applicable Box)

☐ Balance of Facilities ☐ HLW Vitrification ☐ Analytical Laboratory ☐ Across all areas

☒ Pretreatment ☐ LAW Vitrification ☐ External Interfaces

Document is applicable to ALARA (as determined by the originator)? ☐ Yes ☒ No

Applicability to ALARA means that the item has the potential to affect doses, contamination levels, or releases to the environment. (See 24590-WTP-GPP-SRAD-002, *Application of ALARA in the Design Process*, sections 4.1 and 4.2 for more information.)

Subject code(s): _____ (for correspondence only)

ACTION ITEM INFORMATION (for correspondence other than meeting minutes)

Commitments: ☐ Yes ☒ No (if yes, brief description below)

Tracked by RITS

Commitment Owed to: _____ Due Date: _____

Actionee(s)

Tracked by PADC

Written Response Required: ☐ Yes ☒ No

Owed to: _____ Due Date: _____

This correspondence closes action on Correspondence Number _____

☐ Subcontract Files _____ Copies

☐ PAAA Coordinator MS14-4B

☐ Contains SENSITIVE Information

Additional Departmental Info (to facilitate keyword search)

Internal ☐ DNFSB ☐ ORP ☐ OSR ☐ WDOE ☐ WDOH ☐ Other _____

Special Instructions for PDC

☒ Processed/Data Entry ☐ Copied/QA ☐ Scanned ☐ Filed

ISSUED BY
RPP-WTP PDC
INIT DATE 8/28/03

Document title: **System Logic Description for Pretreatment Facility Waste Feed Receipt Process (FRP) System**

Contract number: DE-AC27-01RV14136

Department: Controls and Instrumentation

Author(s): Vyacheslav Maizel, Mark A. Friedrich

Principal author signature: Vyacheslav Maizel Mark A Friedrich

Document number: 24590-PTF-PER-J-02-002, Rev 0

Checked by: Randy Meinert
Rand Mein

Checker signature:

Date of issue: 8/27/03

Issue status: Issued for Permitting Use

Approved by: Stephen E. Anderson

Approver's position: C&I Engineering Manager

Approver signature: Stephen E. Anderson

MARK A. FRIEDRICH
STATE OF WASHINGTON
32426
REGISTERED
PROFESSIONAL ENGINEER
Mark A Friedrich
8-27-04
EXPIRES: 08 / 31 / 04

This bound document contains a total of 18 sheets

River Protection Project
Waste Treatment Plant
2435 Stevens Center Place
Richland, WA 99352
United States of America
Tel: 509 371 2000

Notice

Please note that source, special nuclear, and byproduct materials, as defined in the Atomic Energy Act of 1954 (AEA), are regulated at the US Department of Energy (DOE) facilities exclusively by DOE acting pursuant to its AEA authority. DOE asserts that pursuant to the AEA, it has sole and exclusive responsibility and authority to regulate source, special nuclear, and byproduct materials at DOE-owned nuclear facilities. Information contained herein on radionuclides is provided for process description purposes only.

History Sheet

Rev	Date	Reason for revision	Revised by
0	8-27-03 8-27-03	Issued for Permitting Use	VM/MAF

Contents

1 Introduction 1

2 Applicable Documents 1

3 Description 1

3.1 System Requirement 1

3.1.1 Waste Feed Receipt Vessels 2

3.1.2 Waste Feed Return Pump 6

3.1.3 Waste Feed Transfer Pump 6

Figures

Figure 1. FRP-LI-0103 for Waste Feed Receipt Vessel (FRP-VSL-00002A) 7

Figure 2. FRP-LI-0108 for Waste Feed Receipt Vessel (FRP-VSL-00002B) 8

Figure 3. FRP-LI-0203 for Waste Feed Receipt Vessel (FRP-VSL-00002C) 9

Figure 4. FRP-LI-0208 for Waste Feed Receipt Vessel (FRP-VSL-00002D) 10

Figure 5. FRP-FI-0309/FRP-FQI-0309 for Waste Feed Return Pump (FRP-PMP-00001) 11

Figure 6. FRP-FI-0352/FRP-FQI-0352 for Waste Feed Transfer Pump (FRP-PMP-00002A) 12

Acronyms and Abbreviations

Reference the *P&ID Symbols and Legend Sheets*, as listed in the Applicable Documents section, for acronyms and abbreviations employed on the attached figures.

FEP	waste feed evaporation process
FRP	waste feed receipt process
HLP	HLW lag storage and feed blending process
HLW	high-level waste
LAW	low-activity waste
LOL	lower operating limit
PCS	process control system
PTF	pretreatment facility
PWD	plant wash and disposal
SHR	sodium hydroxide reagent
TCP	treated LAW concentrate storage process
TFC	tank farm contractor
UFP	ultrafiltration process
UOL	upper operating limit
WTP	River Protection Project - Waste Treatment Plant

Glossary

acquire	Acquire is a command under a batch control that reserves a group of equipment for that particular batch control.
actual volume	Actual volume is amount, in US gallons, of the waste and process fluid in any vessel.
available space	Available space refers to the volume, in US gallons, of waste and process fluid that any vessel can accommodate and still be lower than the upper operating limit (UOL). Available space can be calculated as follows: *Available Space = UOL - Actual Volume*
available volume	Available volume refers to the volume, in US gallons, of waste and process fluid that any vessel can transfer to another vessel and still be above the lower operating limit (LOL). Available volume can be calculated as follows: *Available Volume = Actual Volume - LOL*
batch	This refers to material that is being produced or that has been produced by a single execution of a batch process.
batch control	This term refers to control activities and control functions that provide a means to process finite quantities of material over a finite period of time using one or more pieces of equipment and ordered set of processing activities.
exception handling	This term refers to the functions that deal with plant or process contingencies and other events that occur outside the normal or desired behavior of batch control.
permissive	A permissive is an interlock that allows a device to change state or allows a sequence to start. Once a device has changed state or a sequence started, a permissive has no further effect on the device or sequence.
release	Release is a command under a batch control that opens up a group of equipment for any batch control to acquire.
trip	A trip is a conditional interlock that forces a device or a sequence to a defined state. A trip continues to have an effect on the device or sequence until the interlock condition no longer exist.

1 Introduction

This document describes the control logic for dangerous waste regulated systems and components for the waste feed receipt process (FRP) system within the pretreatment (PT) facility.

2 Applicable Documents

24590-PTF-M6-FRP-P0001, *P&ID - PTF. Waste Feed Receipt Vessels FRP-VSL-00002A and FRP-VSL-00002B (Q).*

24590-PTF-M6-FRP-P0002, *P&ID - PTF. Waste Feed Receipt Vessels FRP-VSL-00002C and FRP-VSL-00002D (Q).*

24590-PTF-M6-FRP-P0003, *P&ID - PTF. Waste Feed Receipt Process System FRP-PMP-00001 and FRP-PMP-00002 (Q).*

24590-PTF-M6-FRP-P0005, *P&ID - PTF. Waste Feed Receipt Utility Services - PSA Rack (Q).*

24590-PTF-M6-FRP-P0006, *P&ID - PTF. Waste Feed Receipt Utility Services - PSA Rack (Q).*

24590-PTF-M6-FRP-P0007, *P&ID - PTF. Waste Feed Receipt Utility Services - PSA Rack (Q).*

24590-PTF-M6-FRP-P0008, *P&ID - PTF. Waste Feed Receipt Utility Services - PSA Rack (Q).*

24590-WTP-M6-50-P0001, *P&ID Symbols and Legend Sheet 1 of 6.*

24590-WTP-M6-50-P0002, *P&ID Symbols and Legend Sheet 2 of 6.*

24590-WTP-M6-50-P0003, *P&ID Symbols and Legend Sheet 3 of 6.*

24590-WTP-M6-50-P0004, *P&ID Symbols and Legend Sheet 4 of 6.*

24590-WTP-M6-50-P0005, *P&ID Symbols and Legend Sheet 5 of 6.*

24590-WTP-M6-50-P0006, *P&ID Symbols and Legend Sheet 6 of 6.*

24590-PTF-3YD-FRP-00001, *System Description for Waste Feed Receipt Process (FRP).*

3 Description

3.1 System Requirement

The vessels and pumps (along with corresponding valves and instruments) associated with dangerous waste management within the FRP system are the following:

FRP-VSL-00002A	waste feed receipt vessel
FRP-VSL-00002B	waste feed receipt vessel
FRP-VSL-00002C	waste feed receipt vessel
FRP-VSL-00002D	waste feed receipt vessel
FRP-PMP-00001	waste feed return pump
FRP-PMP-00002A	waste feed transfer pump

3.1.1 Waste Feed Receipt Vessels

Waste feed receipt vessels (FRP-VSL-00002A, FRP-VSL-00002B, FRP-VSL-00002C, and FRP-VSL-00002D) are identical.

Instrumentation, alarms, controls, and interlocks will be provided for the FRP system to indicate or prevent the following conditions:

- Vessel contents overflow (level indication)
- Loss of system integrity (vessel level indication)
- Inadvertent transfer (permissive signals to transfer pumps)
- Inaccurate vessel level (density compensation to indicate true level)
- Excessive temperature (temperature monitoring)

The four waste feed receipt vessels are primarily used to receive waste feed from the tank farm contractor (TFC). The waste will then be transferred to either the ultrafiltration feed preparation vessels (UFP-VSL-00001A and UFP-VSL-00001B) or the waste feed evaporator feed vessels (FEP-VSL-00017A and FEP-VSL-00017B).

The waste is received from the TFC through the inner pipe of any of three coaxial transfer pipes. These pipes, equipped with leak detection systems, allow receipt of the waste into the four waste feed receipt vessels. The piping system is also available to allow transfer of waste from one vessel to another, as well as allowing storage and return of waste from the PT facility.

When a waste feed receipt vessel (FRP-VSL-00002A, FRP-VSL-00002B, FRP-VSL-00002C, or FRP-VSL-00002D) is ready to receive feed from the TFC or any source within the PT facility (systems FRP, TCP, FEP, or HLP), the FRP operator will initiate the transfer-in batch control operation. This operation will prompt the operator to confirm that all pre-start administrative control requirements are satisfied. The sequence will not proceed until the operator acknowledges the prompt. At this time, the control system will monitor the parameters that constitute permissive or trip interlocks and perform the data transfer between the FRP control system and the TFC. Once the prompt is acknowledged by the operator and the transfer line is selected, the process control system (PCS) will automatically align all necessary valves. The position feedback switches of these valves are monitored by the PCS. If any of the valves are not in the correct position, the sequence will be switched to an exception logic that stops transferring and initiates pre-defined corrective action.

For better control of any transfer operation for any of the waste feed receipt vessels (FRP-VSL-00002A, FRP-VSL-00002B, FRP-VSL-00002C, and FRP-VSL-00002D), transfers are limited by the batch control transfer-in or transfer-out operation per vessel. Once the batch control acquires any FRP vessel, no other batch control operation is able to acquire this vessel until it is released from the initial operation. The acquiring and releasing steps ensure that this vessel cannot transfer or receive from multiple destinations at the same time.

When acquired, the transfer-in sequence is initiated. Under normal operating conditions the transfer-in sequence will be completed when either of the following occurs:

- The required batch volume has been transferred and post-transfer flushing and draining are done.
- The last receipt vessel reaches its upper operating limit (UOL)

Once the vessel is released, the PCS can then initiate a transfer-out sequence. Under normal operating conditions the transfer-out sequence can be stopped if any of the following occurs:

- When the level in a waste feed receipt vessel (FRP-VSL-00002A/B/C/D) reaches its low operating limit (LOL).
- A specified volume is transferred.
- The destination vessel reaches its UOL.

For batch volume transfers, the Operator, based on PCS information, confirms that the available space in the destination vessel and the available volume in the sending vessel are consistent with target batch volume specified by the Operator. That means that during the batch transfer the destination UOL and sending LOL are not exceed.

Prior to and during the transfer of feed from the TFC to the waste feed receipt vessels (FRP-VSL-00002A, FRP-VSL-00002B, FRP-VSL-00002C, or FRP-VSL-00002D), there is data exchange between the WTP and the TFC to ensure a safe transfer operation and to prevent any overflows. This data interface is regulated through control systems hardwired signals (permissives and trips) exchange.

The transferring process from the TFC to the WTP stops if the "HIGH-HIGH" Level in Ultimate Overflow Vessel PWD-VSL-00033 alarm" is activated. This PCS action stops the transferring pump on the TFC side and closes the inlet and outlet valves on all waste feed receipt vessels (FRP-VSL-00002A, FRP-VSL-00002B, FRP-VSL-00002C, and FRP-VSL-00002D). This interruption occurs regardless of the current status of the transferring operation. During the entire transfer-in or transfer-out sequence, the PCS monitors the sump alarms within the PTF and notifies the operator if an alarm condition occurs. The operator can then manually stop the transfer or allow the batch control to switch to an exception handling logic.

When the level in any of the waste feed receipt vessels (FRP-VSL-00002A, FRP-VSL-00002B, FRP-VSL-00002C, and FRP-VSL-00002D) is no longer within the normal operating range, control system interlocks will prevent an overflow condition. Upon reaching the "HIGH-HIGH" level, the PCS indicates an alarm to the operator and automatically stops transferring pumps on the TFC side and closes the inlet valves.

Each step in the batch operation will be performed automatically with built-in operator prompts as dictated by the pre-transfer, during-transfer, and post-transfer operator/PCS interfaces and controls listed below.

Action	The Goal of the Action
• Select receiving vessels	This will allow proper valve alignment thereby preventing misrouting of feed within FRP
• Select one of the three transfer lines	This will allow proper valve alignment thereby preventing misrouting of feed to WTP.
• Specify the feed volume for each receipt vessel, based on the available volume (in US gallons), including flush volume	This will control vessel filling level, vessel filling sequence, and prevent overflow
• Operator enables permissive to start transfer	This will authorized initiation of transfer operation
• Confirm start (via flow totalizer) of transfer	This ensures that the valves are aligned properly.
• Confirm receipt of feed via level in the vessel and flow totalizer instrumentation.	This ensures a controlled operation.
• Disable permissive to stop transfer when the target volume in the last receipt tank is achieved	This will prevent overflow of the waste feed receipt vessels (FRP-VSL-00002A/B/C/D)
• Confirm that volume is available in the HLW effluent transfer vessel (PWD-VSL-00043) to receive transfer line post-flush drain.	This will prevent overflow to the ultimate overflow vessel (PWD-VSL-00033).
• Drain pipeline flush	This will ensure that no flush liquid remains in the lines
• Secure valving.	This will ensure that the valves are in the proper position after the transfer.
• Calculate the actual feed volume and flush volume received from the TFC.	This will confirm receipt of actual amount of waste and flush from TFC for record keeping

The following are interlocks between the WTP and the TFC that are working all the time. The interlocks are done using hardwire signal cables originating at WTP control system and terminating at the TFC's control system. These signals tie into interlock logic performed within each of the control systems. These trips disable the transfer permissive.

Interlock Signal	Usage
• "HIGH-HIGH" level interlock in ultimate overflow vessel (PWD-VSL-00033)	This signal will be used as a trip in the TFC master pump shutdown logic to stop the transfer, preventing an overflow of the ultimate overflow vessel (PWD-VSL-00033).
• "HIGH" level interlock in transfer line leak pot	This signal is used as a trip in the TFC master pump shutdown logic to stop the transfer upon failure of primary containment and preventing overflow of the ultimate overflow vessel (PWD-VSL-00033).
• The "HIGH" level interlock in black cell or hot cell sumps	This will prevent initiation or stop transfer if vessel and piping integrity within PTF is suspect
• "HIGH-HIGH" level interlock in any receiving vessel	This will prevent an overflow condition in the FRP system
• Valves are not properly aligned in WTP facility for transfer from TFC	This signal will be used as a permissive to start the transfer from the TFC to WTP to avoid deadheading of the transfer pump, and will prevent a misroute.
• Control valves or associated instrumentation are not functional.	This will ensure that the transfer can be monitored and controlled.
• Operator disables transfer	This signal will be used as a trip in the TFC master pump shutdown logic to stop the transfer pump.

Figures 1, 2, 3, and 4 show the interlocks and alarms for level instruments associated with the waste feed receipt vessels (FRP-VSL-00002A, FRP-VSL-00002B, FRP-VSL-00002C, and FRP-VSL-00002D).

3.1.2 Waste Feed Return Pump

There is the capability to return waste from FRP system and vessels in HLP system (HLP-VSL-00022, HLP-VSL-00027A, HLP-VSL-00027B, and HLP-VSL-00028) back to the TFC through the FRP system. This transfer is also controlled by a transfer-out batch control operation with built-in pre-start and post-transfer Operator/PCS interfaces and controls and hardwired data exchanges between the WTP and the TFC.

The waste feed return pump (FRP-PMP-00001) will be used to return waste from the FRP and the HLP systems to the tank farms through one of the three transfer pipelines. The return of off-specification waste feed will be followed by a flush consisting of up to three pipeline volumes of inhibited water from the flush tank (SHR-TK-00009). The flush will flow from the PT facility to the tank farms. Following the flush, liquid remaining in the pipeline will be gravity-drained from the high point in the line back to the HLW effluent transfer vessel (PWD-VSL-00043).

On the discharge section of the pump there is a flow meter (FRP-FT-0309) that measures flow through the pump. Based on flow measuring, the PCS calculates the amount of waste and flushing water that has been transferred through the pump. This calculation, along with a similar calculation based on level changes in the receiving vessel, is used to control the transfer.

Figure 5 shows the interlocks and alarms for flow associated with the waste feed return pump (FRP-PMP-00001). Also Figure 5 shows the control logic for this pump.

3.1.3 Waste Feed Transfer Pump

The waste feed transfer pump (FRP-PMP-00002A) is used for transferring waste to the waste feed evaporator feed vessels (FEP-VSL-00017A and FEP-VSL-00017B), ultrafiltration feed preparation vessels (UFP-VSL-00001A and UFP-VSL-00001B), and treated LAW concentrate storage vessel (TCP-VSL-00001). This pump will also be used for transferring waste to any vessel within the FRP system.

On the discharge section of the pump there is a flow meter/totalizer (FRP-FT/FQI-0352) that measures flow through the pump. Based on flow measuring, the PCS calculates the amount of waste and flushing water that has been transferred through the pump. This calculation, along with a similar calculation based on level changes in the receiving vessel, is used to control the transfer.

Some transferring within PTF, utilized the waste feed transfer pump (FRP-PMP-0002A), will be followed by a water flush. After flushing is complete, liquid remaining in the pipeline will drain to the ultimate overflow vessel (PWD-VSL-00033).

The waste feed transfer pump (FRP-PMP-00002A) stops, if the "HIGH-HIGH" level alarm in ultimate overflow vessel (PWD-VSL-00033) is activated. This action interrupts any current waste transferring or flushing from FRP system to the FEP/UFP/TCP systems or any transferring from within FRP.

Figure 6 shows the interlocks and alarms for flow associated with the waste feed transfer pump (FRP-PMP-00002A). Also Figure 6 shows the control logic for this pump.

Figure 1. FRP-LI-0103 for Waste Feed Receipt Vessel (FRP-VSL-00002A)

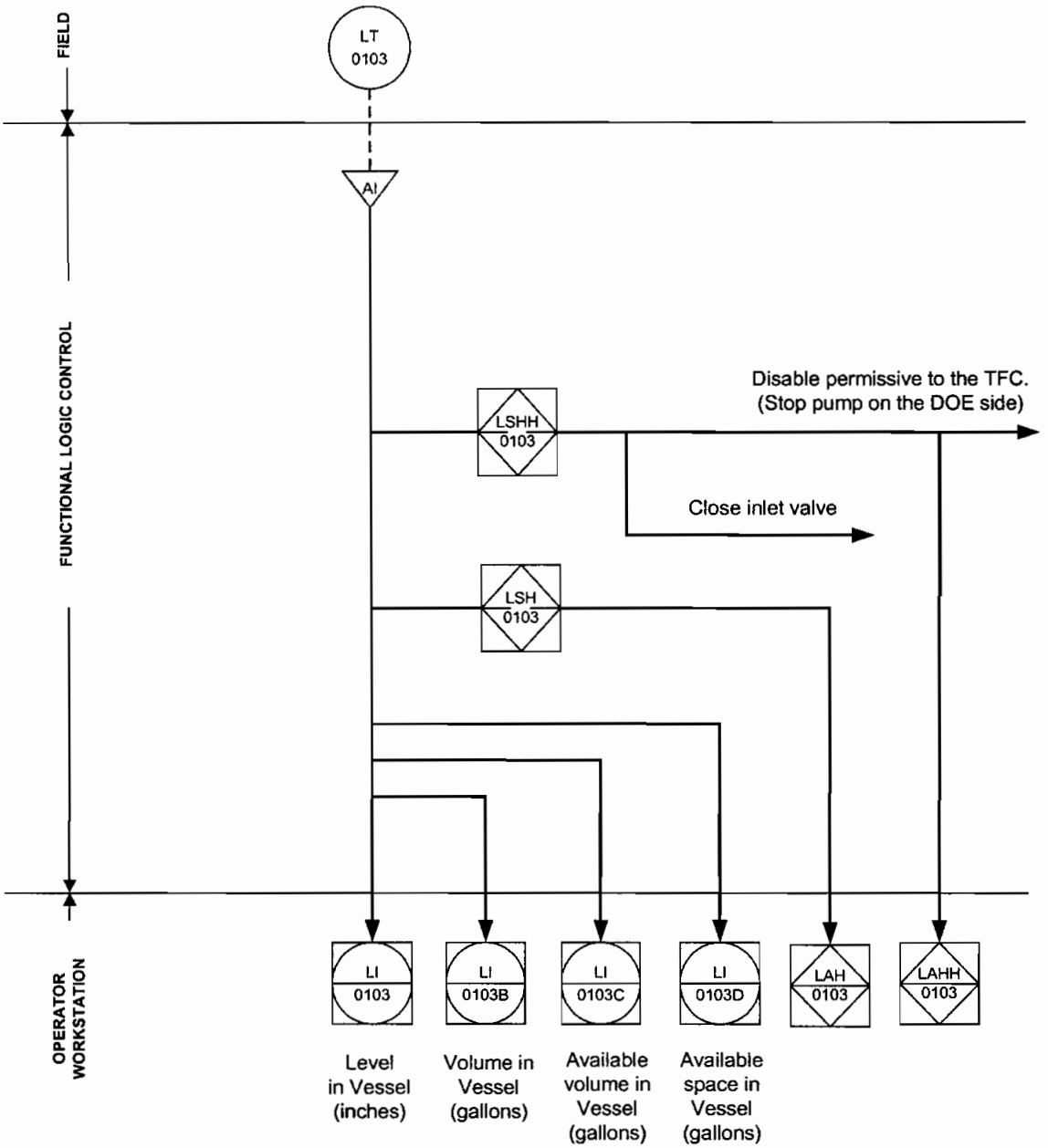

Figure 2. FRP-LI-0108 for Waste Feed Receipt Vessel (FRP-VSL-00002B)

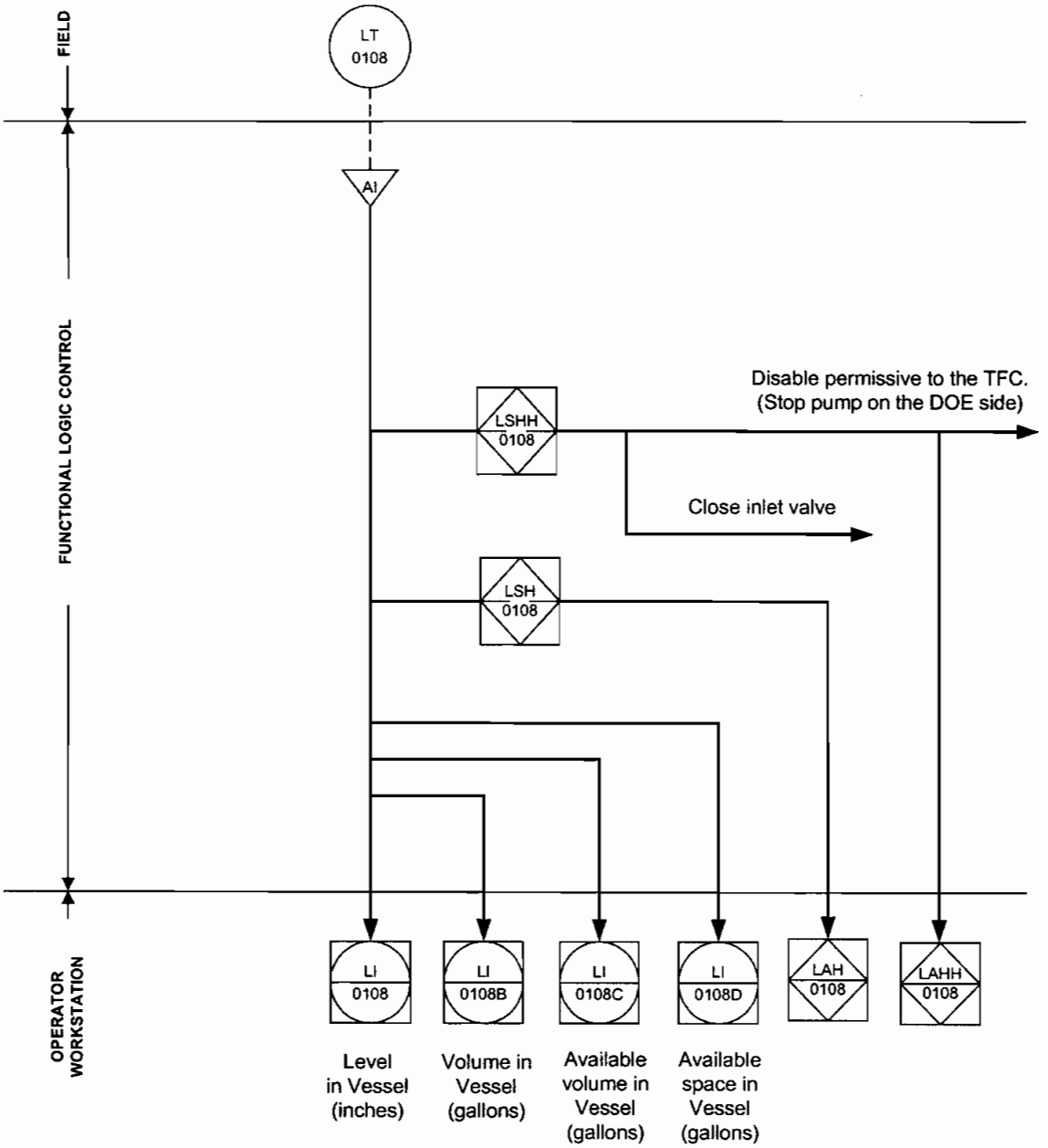

Figure 3. FRP-LI-0203 for Waste Feed Receipt Vessel (FRP-VSL-00002C)

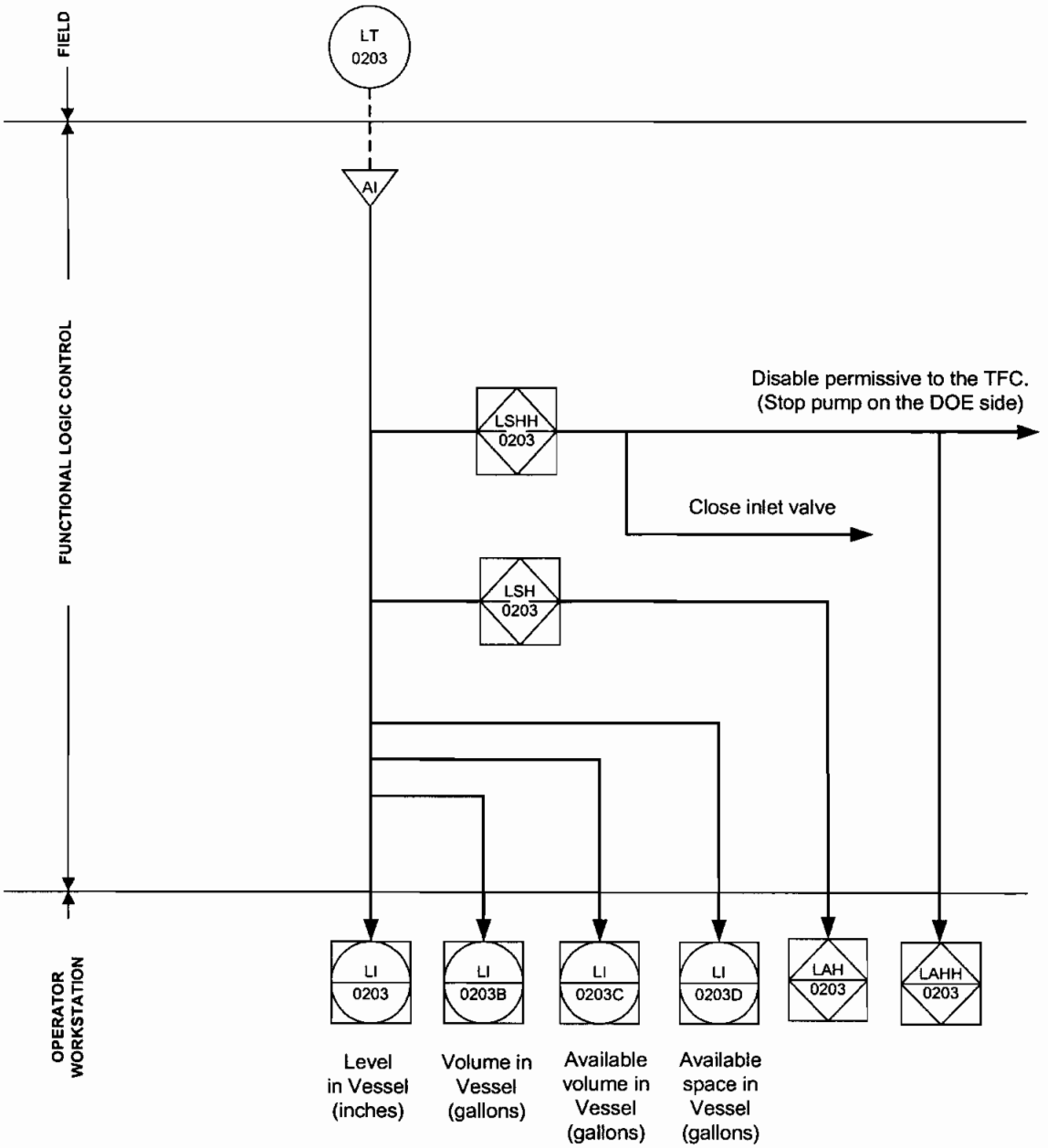

Figure 4. FRP-LI-0208 for Waste Feed Receipt Vessel (FRP-VSL-00002D)

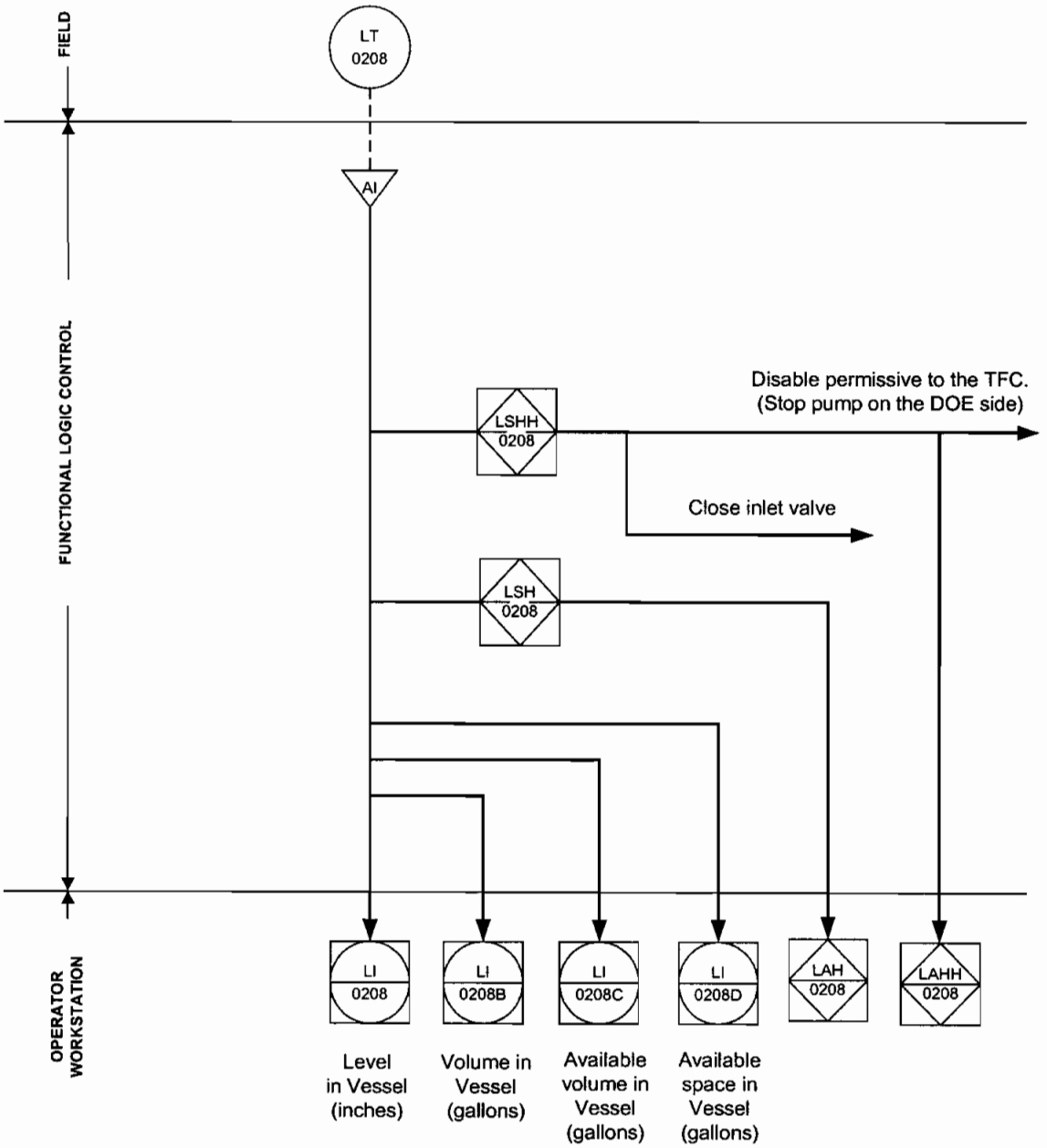

Figure 5. FRP-FI-0309/FRP-FQI-0309 for Waste Feed Return Pump (FRP-PMP-00001)

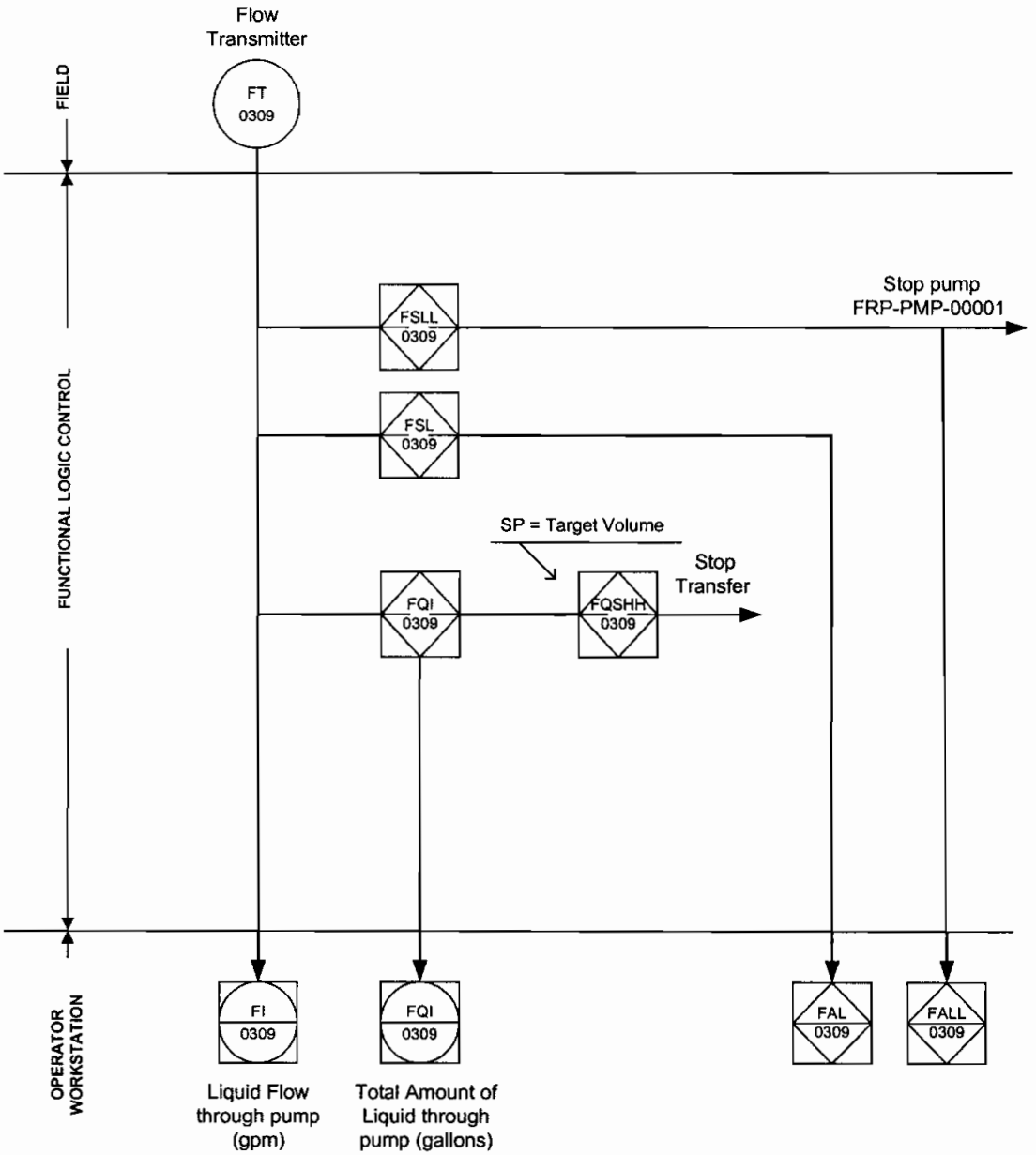

Figure 6. FRP-FI-0352/FRP-FQI-0352 for Waste Feed Transfer Pump (FRP-PMP-00002A)

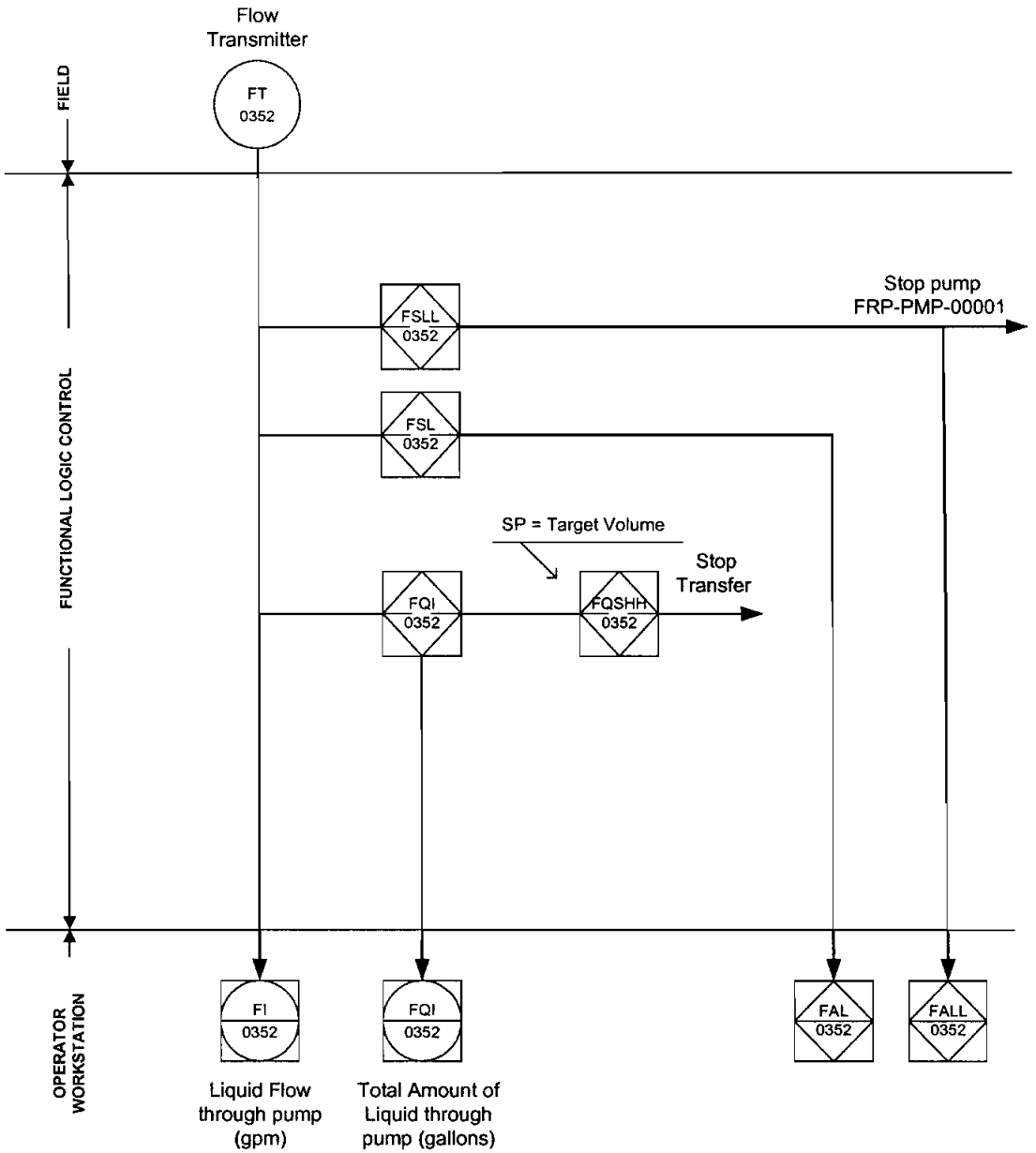

R10273821

ISSUED BY
RPP-WTP PDC
MZ 3/23/04
INIT DATE

Document title: **System Logic Description for Pretreatment Facility - Waste Feed Evaporation Process (FEP) System**

Contract number: DE-AC27-01RV14136

Department: Controls and Instrumentation

Author(s): V Maizel M Friedrich

Principal author signature: Vyacheslav Maizel / Mark Friedrich

Document number: 24590-PTF-PER-J-02-003, Rev 0

Checked by: M Ko

Checker signature:

Date of issue: 18 March 2004

Issue status: Issued for Permitting Use

Approved by: S Anderson

Approver's position: C&I Engineering Manager

Approver signature: S. E. Anderson

MARK A. FRIEDRICH
STATE OF WASHINGTON
32426
REGISTERED
PROFESSIONAL ENGINEER
3-22-04
EXPIRES: 08/31/04

This bound document contains a total of 14 sheets

River Protection Project
Waste Treatment Plant
2435 Stevens Center Place
Richland, WA 99352
United States of America
Tel: 509 371 2000

Notice

Please note that source, special nuclear, and byproduct materials, as defined in the Atomic Energy Act of 1954 (AEA), are regulated at the US Department of Energy (DOE) facilities exclusively by DOE acting pursuant to its AEA authority. DOE asserts that pursuant to the AEA, it has sole and exclusive responsibility and authority to regulate source, special nuclear, and byproduct materials at DOE-owned nuclear facilities. Information contained herein on radionuclides is provided for process description purposes only.

History Sheet

Rev	Date	Reason for revision	Revised by
0	28 August 2003	Issued for Permitting Use	V Maizel/M Friedrich

Contents

Notice ii

History Sheet iii

Acronyms and Abbreviations v

Glossary vi

1 Introduction 1

2 Applicable Documents 1

3 Description 1

3.1 System Requirement 1

3.1.1 General Process 2

3.1.2 Waste Feed Evaporator Feed Vessels 2

3.1.3 Waste Feed Evaporator Condensate Vessel 4

3.1.4 Waste Feed Evaporator Separator Vessels 4

Figures

Figure 1 FEP-LI-0103 for Waste Feed Evaporator Feed Vessel (FEP-VSL-00017A) 6

Figure 2 FEP-LI-0321 for Waste Feed Evaporator Condensate Vessel (FEP-VSL-00005) 7

Figure 3 FEP-LI-0208 for Waste Feed Evaporator Separator Vessel (FEP-SEP-00001A) 8

Acronyms and Abbreviations

AI	analog input
ASD	adjustable speed drive
DOE	US Department of Energy
FEP	waste feed evaporation process
FRP	waste feed receipt process system
HLW	high-level waste
LAH	level alarm high
LAHH	level alarm high-high
LC	level controller
LI	level indication
LOL	lower operating limit
LSH	level switch high
LSHH	level switch high-high
LT	level transmitter
PCS	process control system
PT	pretreatment
PWD	plant wash and disposal
RDP	spent resin collection and dewatering process
RLD	radioactive liquid waste disposal
UFP	ultrafiltration process
UOL	upper operating limit

Glossary

acquire	Acquire is a command under a batch control that reserves a group of equipment for that particular batch control.
actual volume	Actual volume is the amount, in US gallons, of the waste and process fluid in any vessel.
available space	Available space refers to the volume, in US gallons, of waste and process fluid that any vessel can accommodate and still be lower than the upper operating limit (UOL). Available space can be calculated as follows: *Available Space = UOL - Actual Volume*
available volume	Available volume refers to the volume, in US gallons, of waste and process fluid that any vessel can transfer to another vessel and still be above the lower operating limit (LOL). Available volume can be calculated as follows: *Available Volume = Actual Volume - LOL*
batch	This refers to material that is being produced or that has been produced by a single execution of a batch process.
batch control	This term refers to control activities and control functions that provide a means to process finite quantities of material over a finite period of time using one or more pieces of equipment and ordered set of processing activities.
exception handling	This term refers to the functions that deal with plant or process contingencies and other events that occur outside the normal or desired behavior of batch control.
permissive	A permissive is an interlock that allows a device to change state or allows a sequence to start. Once a device has changed state or a sequence started, a permissive has no further effect on the device or sequence.
release	Release is a command under a batch control that opens up a group of equipment for any batch control to acquire.
trip	A trip is a conditional interlock that forces a device or a sequence to a defined state. A trip continues to have an effect on the device or sequence until the interlock condition no longer exist.

1 Introduction

This document describes the control logic for dangerous waste regulated systems and components for the waste feed evaporation process (FEP) system within the pretreatment (PT) facility.

2 Applicable Documents

MAF 3-23-04

24590-PTF-3YD-FEP-~~P0001~~, *System Description for Waste Feed Evaporation Process (FEP).*
00001

24590-PTF-M6-FEP-P0001, *P&ID - PTF Waste Feed Evaporation Process System Evaporator Feed Vessels FEP-VSL-00017A/B (Q).*

24590-PTF-M6-FEP-P0002, *P&ID - PTF Waste Feed Evaporation Process System Separator FEP-SEP-00001A.*

24590-PTF-M6-FEP-P0003, *P&ID - PTF Waste Feed Evaporation Process System Condensers and Condensate Collection FEP-VSL-00005.*

24590-PTF-M6-FEP-P0004, *P&ID – PTF Waste Feed Evaporation Process System Separator FEP-SEP-00001B.*

24590-PTF-M6-FEP-P0005, *P&ID - PTF Waste Feed Evaporation Process System Condensers.*

24590-WTP-M6-50-P0001, *P&ID Symbols and Legend Sheet 1 of 6.*

24590-WTP-M6-50-P0002, *P&ID Symbols and Legend Sheet 2 of 6.*

24590-WTP-M6-50-P0003, *P&ID Symbols and Legend Sheet 3 of 6.*

24590-WTP-M6-50-P0004, *P&ID Symbols and Legend Sheet 4 of 6.*

24590-WTP-M6-50-P0005, *P&ID Symbols and Legend Sheet 5 of 6.*

24590-WTP-M6-50-P0006, *P&ID Symbols and Legend Sheet 6 of 6.*

3 Description

3.1 System Requirement

The vessels (along with the corresponding valves and instruments) associated with dangerous waste management within the FEP system are the following:

FEP-VSL-00017A/B	waste feed evaporator feed vessels
FEP-SEP-00001A/B	waste feed evaporator separator vessels
FEP-VSL-00005	waste feed evaporator condensate vessel

3.1.1 General Process

The FEP system primarily serves to evaporate recycle streams that would otherwise accumulate in the plant wash and disposal (PWD) and the spent resin collection and dewatering process (RDP) systems. When a waste feed below approximately 5 molar Na concentration is received, it is blended with other recycles and the concentration raised to approximately 5 molar Na.

The primary mode of operation has one waste feed evaporator feed vessel accumulating recycle feed (FEP-VSL-00017A or FEP-VSL-00017B) while the other vessel feeds an evaporator. In addition, either waste feed evaporator feed vessel (FEP-VSL-000017A or FEP-VSL-000017B) can feed both evaporators simultaneously, using both waste feed evaporator feed pumps (FEP-PMP-00007A and FEP-PMP-00007B). It is also possible for each waste feed evaporator feed vessel (FEP-VSL-00017A and FEP-VSL-00017B) to be dedicated to an evaporator train and for the two trains to operate simultaneously.

Concentrated product from the evaporator is usually sent to the ultrafiltration process (UFP) system. It can also be transferred to the waste feed receipt process (FRP) system.

Additional routing also provide for operations that include:

- Adding high-level waste (HLW) feed to the waste feed evaporator feed vessels (FEP-VSL-00017A and FEP-VSL-00017B) for blending solids with evaporator feed
- Reprocessing concentrated product that did not meet the desired concentration

Instrumentation, alarms, control, and interlocks will be provided for all vessels in the FEP system to indicate or prevent the following conditions:

- Vessel contents overflow (level indication and passive overflow routes to the ultimate overflow vessel PWD-VSL-00033)
- Loss of system integrity (sump level indication)
- Inadvertent transfer (permissive signals to transfer)
- True vessel level (density compensated level)

3.1.2 Waste Feed Evaporator Feed Vessels

Waste feed evaporator feed vessels (FEP-VSL-00017A and FEP-VSL-00017B) are identical.

The two waste feed evaporator feed vessels (FEP-VSL-00017A and FEP-VSL-00017B) receive waste feed and recycle feed. Waste feed is transferred from the waste receipt vessels (FRP-VSL-00002A, FRP-VSL-00002B, FRP-VSL-00002C, FRP-VSL-00002D, and HLP-VSL-00022). Recycle feed is routed from the plant wash and disposal vessel (PWD-VSL-00044), the acidic-alkaline effluent vessels (PWD-VSL-00015 and PWD-VSL-00016), resin flush vessels (RDP-VSL-00002A, RDP-VSL-00002B, and RDP-VSL-00002C), and ultrafiltration feed preparation vessels (UFP-VSL-00001A, and UFP-VSL-00001B). Waste feed evaporator feed vessels (FEP-VSL-00017A, and FEP-VSL-00017B) are equipped with remote sampling capability.

The waste feed evaporator feed vessels (FEP-VSL-00017A, and FEP-VSL-00017B) can operate filling and discharging at the same time or by alternating one vessel filling and the other discharging.

For better control of the transfer operation, transfers are limited by the batch control transfer-in or transfer-out operation per vessel. Once the batch control sequence acquires any of these vessels, no other batch control operation can acquire this vessel until it is released from the initial operation. The acquiring and releasing steps ensure that the acquired vessel cannot transfer or receive from multiple destinations at the same time.

When the correct vessels have been acquired, the transfer-in sequence is initiated. Under normal operating conditions, the transfer-in sequence will be completed when either of the following occurs:

- The required batch volume has been transferred and post-transfer flushing is complete.
- The receipt vessel reaches its upper operating limit (UOL).

When the vessels are released, the process control system (PCS) can then initiate a transfer-out sequence. Under normal operating conditions the transfer-out sequence can be stopped if any of the following occurs:

- When the level in a waste feed evaporator feed vessel (FEP-VSL-00017A, FEP-VSL-00017B) reaches its lower operating limit (LOL).
- A specified volume is transferred.
- The destination vessel reaches its UOL.

For batch volume transfers, the Operator, based on PCS information, confirms that the available space in the destination vessel and the available volume in the sending vessel are consistent with the target batch volume specified by the operator. That means that during the batch transfer the destination UOL and sending LOL are not exceeded.

The transferring process to the waste feed evaporator feed vessel (FEP-VSL-00017A, FEP-VSL-00017B) stops if the "HIGH-HIGH" level in the ultimate overflow vessel (PWD-VSL-00033) alarm is activated. This PCS action stops the discharging pump on all other systems and closes the inlet valves on the waste feed evaporator feed vessel (FEP-VSL-00017A, FEP-VSL-00017B). This interruption occurs regardless of the current status of the transferring operation. During the entire transfer-in or transfer-out sequence, the PCS monitors the sump alarms within the PT facility and notifies the operator if an alarm condition occurs. The operator can then manually stop the transfer or allow the batch control to switch to an exception handling logic.

Each step in the batch operation will be performed automatically with built-in operator prompts as dictated by the pre-transfer, during-transfer, and post-transfer operator-PCS interface and controls listed below.

Action	The Goal of the Action
• Select receiving vessel (FEP-VSL-00017A or FEP-VSL-00017B).	This will allow proper valve alignment thereby preventing misrouting of feed within PT facility.
• Specify the feed volume from each of the source vessels to the selected feed evaporator vessel, based on the available volume, including flush volume.	This will control vessel filling level, vessel filling sequence, and prevent overflow.
• Operator enables permissive to start transfer.	This will authorize initiation of the transfer operation.
• Confirm start (by flow totalizer) of transfer.	This ensures that the valves are aligned properly.
• Confirm receipt of feed from level in the	This ensures a controlled operation.

Action	The Goal of the Action
vessel and flow totalizer instrumentation.	
• Secure valving.	This will ensure that the valves are in the proper position after the transfer.

The following are interlocks between the FEP system and other systems that are working all the time. These signals tie into the interlock logic performed within each of the control systems. These trips disable the transfer permissive.

Interlock Signal	Usage
• "HIGH-HIGH" level in ultimate overflow vessel (PWD-VSL-00033).	This signal will be used as a trip in other systems to stop the transfer, preventing an overflow of the ultimate overflow vessel (PWD-VSL-00033).
• "HIGH" level in any receiving vessel.	This will prevent an overflow condition within FEP.
• Valves are not properly aligned in FEP for transfer from other system within PT facility.	This signal will be used to avoid deadheading of the transfer pump and will prevent a misroute.
• Control valves or associated instrumentation are not functional.	This will ensure that the transfer can be monitored and controlled.
• Operator disables transfer.	This signal will be used as a trip to stop the transfer pump.

Figure 1 shows the interlocks and alarms for the level instruments associated with the waste feed evaporator feed vessels (FRP-VSL-00017A and FEP-VSL-00017B).

3.1.3 Waste Feed Evaporator Condensate Vessel

The waste feed evaporator condensate vessel (FEP-VSL-00005) collects condensate from the condensers (primary condenser, inter-condenser, and after-condenser). During normal operation, the clean condensate is directed to the process condensate vessels (RLD-VSL-00006A and RLD-VSL-00006B). At the same time some portion of the condensate outlet is recycled to the separator vessel (FEP-SEP-00001A or FEP-SEP-00001B) for spraying the demister pads.
Condensate discharges are batched out by upper and lower liquid level setpoints.

Figure 2 shows the interlocks and alarms for level instruments associated with the waste feed evaporator condensate vessel (FRP-VSL-00005).

3.1.4 Waste Feed Evaporator Separator Vessels

Waste feed evaporator separator vessels (FEP-SEP-00001A and FEP-SEP-00001B) are identical. Each of the waste feed evaporator separator vessel (FEP-SEP-00001A or FEP-SEP-00001B) can receive waste from either waste feed evaporator feed vessels (FEP-VSL-00017A or FEP-VSL-00017B). Transfer to any separator vessel is a continuous process.

Waste transfer to the separator vessel occurs via one of the waste feed evaporator feed pump (FEP-PMP-00007A or FEP-PMP-00007B). Selection of the transfer pump to be used for transferring is done by the operator before starting the evaporation process in the system.

The transferring process is based on the level control in the waste feed evaporator separator vessel. During the normal transfer process, the speed of the transfer pump depends on the level in the vessel: the higher the level is in the vessel, the slower the transfer pump is running and vice versa. In addition, the transfer stops if the "HIGH-HIGH" level into vessel is activated. This PCS action stops the transfer pump and closes the feed inlet valves.

Each step in the continuous transfer process is performed automatically with built-in operator prompts as dictated by the pre-transfer and during-transfer operator-PCS interface and controls listed below.

Action	The Goal of the Action
• Select waste feed evaporator separator vessel (FEP-SEP-00001A or FEP-SEP-00001B) to proceed with evaporation process	This will allow proper valve alignment thereby preventing misrouting of feed within PT facility.
• Select waste feed evaporator feed pump (FEP-PMP-00007A or FEP-PMP-00007B) to supply selected separator vessel	This will allow proper valve alignment thereby preventing misrouting of feed within PT facility.
• Operator enables permissive to start transfer/evaporation	This will authorized initiation of the transfer process
• Confirm receipt of feed from level in the vessel	This ensures a controlled operation.
• Secure valving.	This will ensure that the valves are in the proper position after the transfer.

The following are interlocks within the FEP system that are working all the time. These trips disable the transfer permissive and therefore stop the evaporation process.

Interlock Signal	Usage
• "HIGH-HIGH" level in waste feed evaporator separator vessel (FEP-VSL-00001A or FEP-SEP-00001B).	This signal will be used as a trip to stop the transfer (stop transfer pump and close transfer valves), preventing overfilling of the waste feed evaporator separator vessel (FEP-VSL-00001A or FEP-SEP-00001B)
• Valves are not properly aligned in FEP for transfer from selected transfer pump to the selected waste feed evaporator separator vessel	This signal will be used to avoid deadheading of the transfer pump and will prevent a misroute.
• Control valves or associated instrumentation is not functional.	This will ensure that the transfer can be monitored and controlled.
• Operator disables transfer (evaporation process)	This signal will be used as a trip to stop the transfer pump and change operating mode

Figure 3 shows the interlocks and alarms for the level instruments associated with the waste feed evaporator separator vessels (FRP-VSL-00001A and FEP-VSL-00001B).

Figure 1 FEP-LI-0103 for Waste Feed Evaporator Feed Vessel (FEP-VSL-00017A)

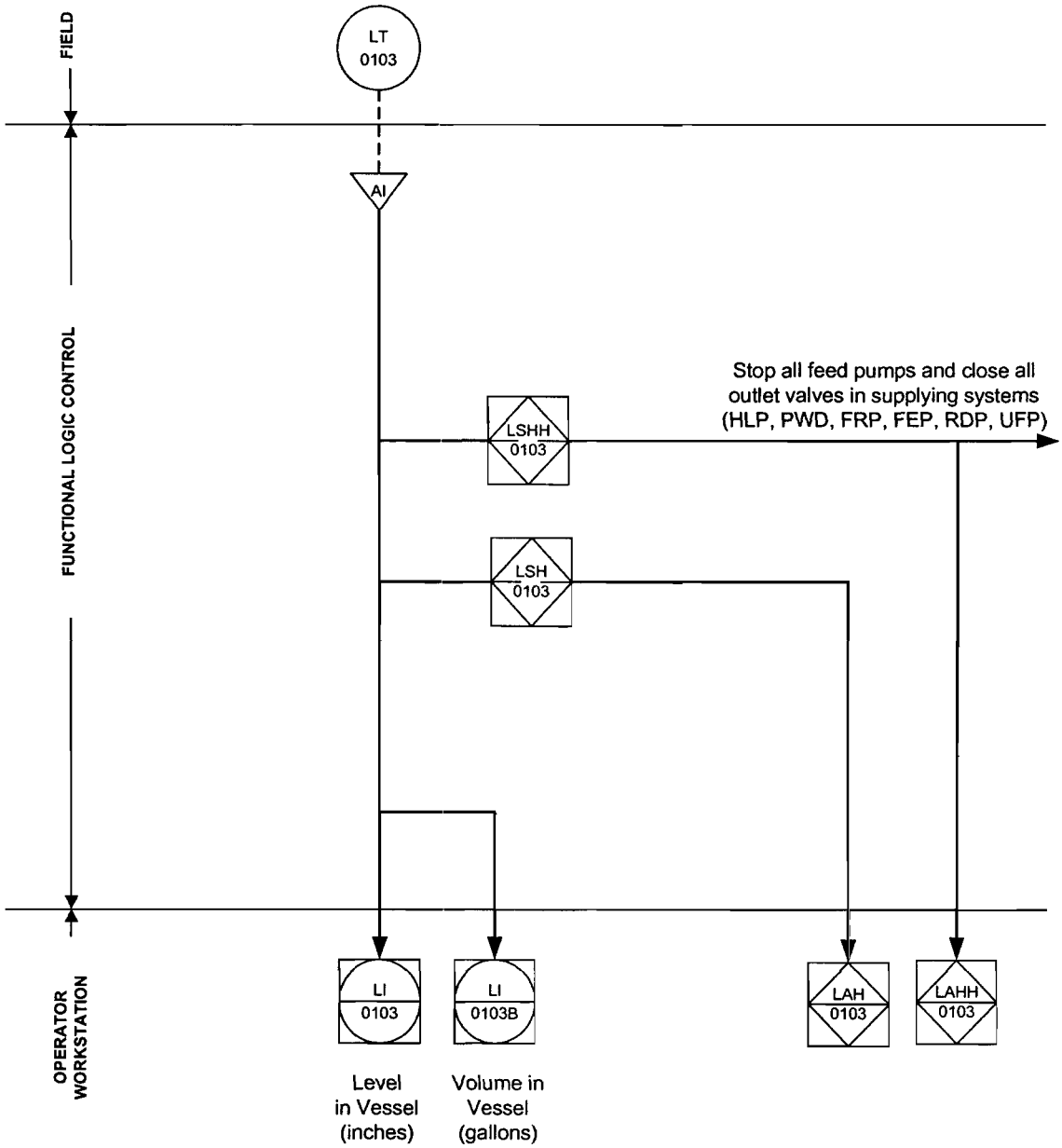

Note: Waste Feed Evaporator Feed Vessels FEP-VSL-00017A and FEP-VSL-00017B have identical logic.

Figure 2 FEP-LI-0321 for Waste Feed Evaporator Condensate Vessel (FEP-VSL-00005)

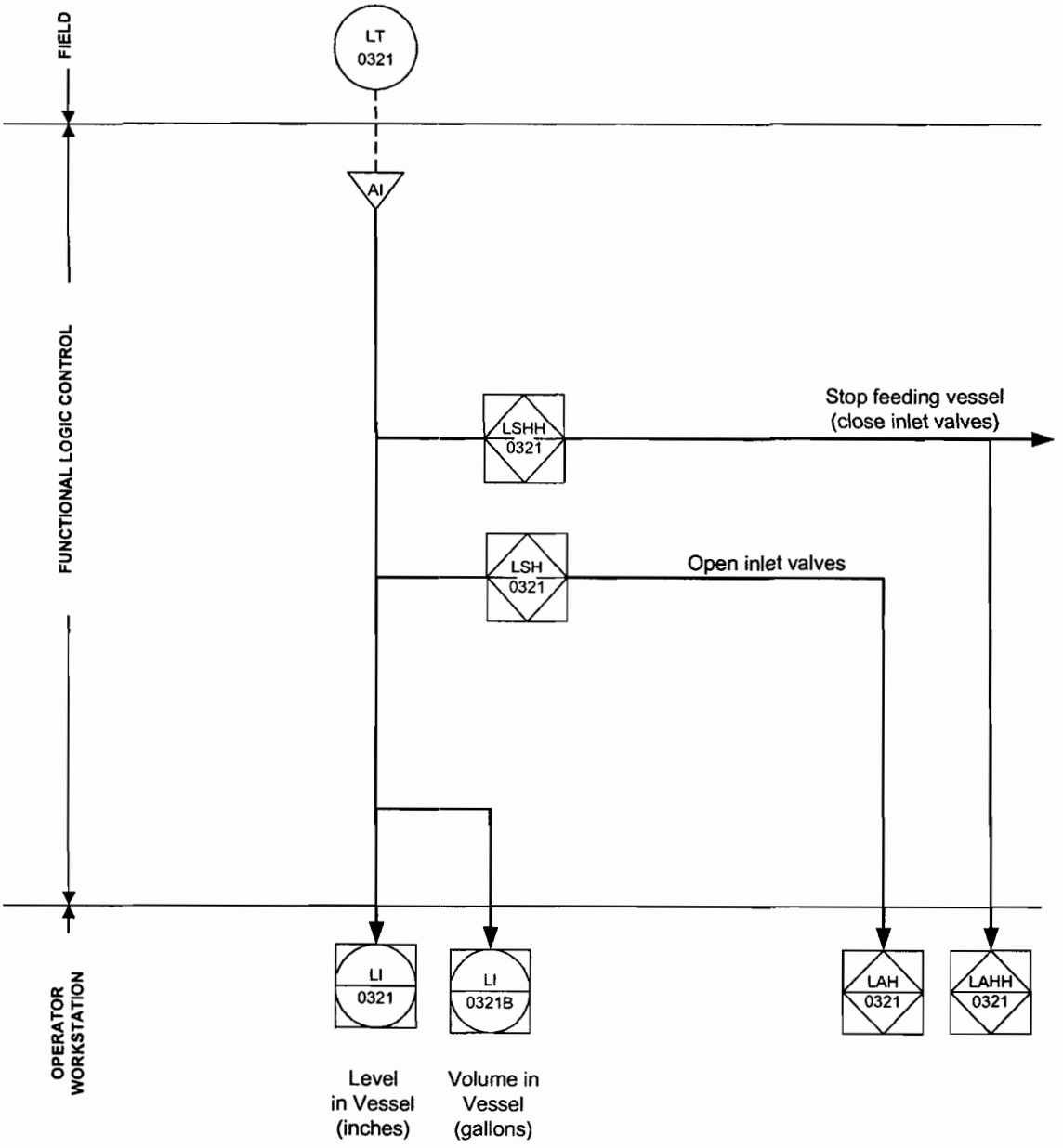

Figure 3 FEP-LI-0208 for Waste Feed Evaporator Separator Vessel (FEP-SEP-00001A)

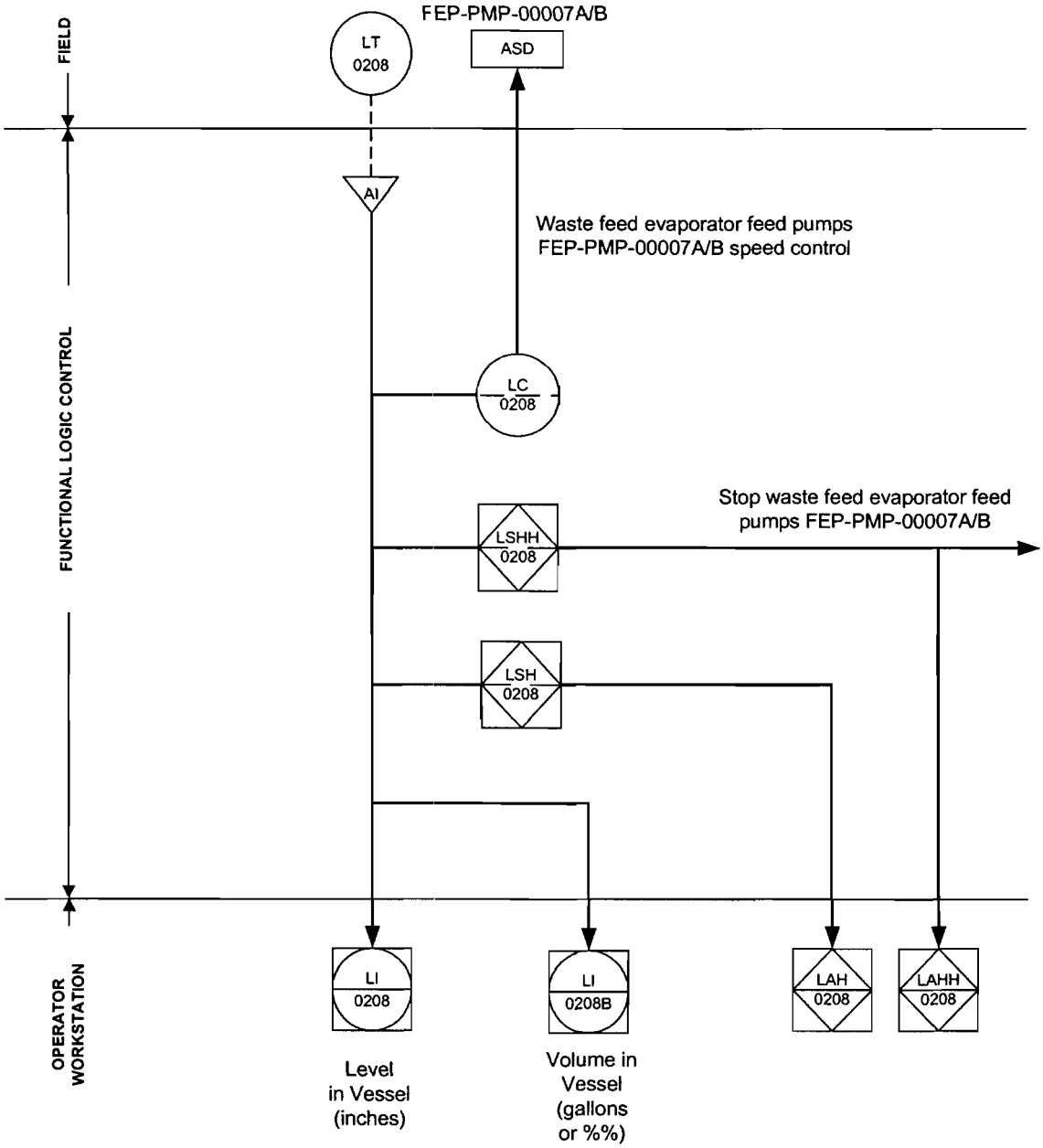

Note: Waste Feed Evaporator Separator Vessels FEP-SEP-00001A and FEP-SEP-00001B have identical logic.

R10162282

Document title:

System Logic Description for Pretreatment Facility Ultrafiltration Process System

ISSUED BY
RPP-WTP PDC
KL 11/19/03
INIT DATE

Contract number: DE-AC27-01RV14136

Department: Controls and Instrumentation

Author(s): M Friedrich

Principal author signature: Mark A Friedrich

Document number: 24590-PTF-PER-J-02-004, Rev 0

Checked by: SG Smith

Sean G Smith

Checker signature:

Date of issue: 11 - 11 - 03

Issue status: Issued for Permitting Use

Approved by: S Anderson

Approver's position: C&I Engineering Manager

Approver signature: S.E. Anderson

MARK A. FRIEDRICH
STATE OF WASHINGTON
32426
REGISTERED
PROFESSIONAL ENGINEER

Mark A Friedrich 11-11-03

EXPIRES: 08/31/2004

This bound document contains a total of 20 sheets

River Protection Project
Waste Treatment Plant
2435 Stevens Center Place
Richland, WA 99352
United States of America
Tel: 509 371 2000

Notice

Please note that source, special nuclear, and byproduct materials, as defined in the Atomic Energy Act of 1954 (AEA), are regulated at the US Department of Energy (DOE) facilities exclusively by DOE acting pursuant to its AEA authority. DOE asserts that pursuant to the AEA, it has sole and exclusive responsibility and authority to regulate source, special nuclear, and byproduct materials at DOE-owned nuclear facilities. Information contained herein on radionuclides is provided for process description purposes only.

History Sheet

Rev	Date	Reason for revision	Revised by
0	11 November 2003	Issued for Permitting Use	MAF

Contents

Notice ii
History Sheet iii
Acronyms and Abbreviations v
Glossary vi
1 Introduction 1
2 Applicable Documents 1
3 Description 2
3.1 Ultrafiltration Feed Preparation Vessel , UFP-VSL-00001A 2
3.2 Ultrafiltration Feed Preparation Vessel, UFP-VSL-00001B 3
3.3 Ultrafiltration Feed Vessel, UFP-VSL-00002A 3
3.4 Ultrafiltration Feed Vessel, UFP-VSL-00002B 4
3.5 Permeate Collection Vessel, UFP-VSL-00062A 5
3.6 Permeate Collection Vessel, UFP-VSL-00062B 6
3.7 Permeate Collection Vessel, UFP-VSL-00062C 6

Figures

Figure 1. Level Measurement for Ultrafiltration Feed Preparation Vessel (UFP-VSL-00001A) 7
Figure 2. Level Measurement for Ultrafiltration Feed Preparation Vessel (UFP-VSL-00001B) 8
Figure 3. Level Measurement for Ultrafiltration Feed Vessel (UFP-VSL-00002A) 9
Figure 4. Level Measurement for Ultrafiltration Feed Vessel (UFP-VSL-00002B) 10
Figure 5. Level Measurement for Permeate Collection Vessel (UFP-VSL-00062A) 11
Figure 6. Level Measurement for Permeate Collection Vessel (UFP-VSL-00062B) 12
Figure 7. Level Measurement for Permeate Collection Vessel (UFP-VSL-00062C) 13

Acronyms and Abbreviations

Reference the piping and instrumentation diagrams (P&IDs) symbols and legend sheets, as listed in section 2, for acronyms and abbreviations employed on the attached figures.

CNP	cesium nitric acid recovery process
Cs	cesium
DOE	US Department of Energy
FEP	waste feed evaporation process
FRP	waste feed receipt process
HLP	HLW lag storage and feed blending process
HLW	high-level waste
LAH	level alarm high
LI	level indication
LOL	lower operating limit
LSH	level switch high
LT	level transmitter
P&ID	piping and instrumentation diagram
PT	pretreatment
Sr	strontium
Tc	technetium
TFC	tank farm contractor
TRU	transuranic
UFP	ultrafiltration process
UOL	upper operating limit
WTP	Hanford Tank Waste Treatment and Immobilization Plant

Glossary

acquire	Acquire is a command under a batch control that reserves a group of equipment for that particular batch control operation.
actual volume	Actual volume is the amount, in US gallons, of waste or process fluid in any vessel.
available space	Available space refers to the volume, in US gallons, of waste or process fluid that any vessel can accommodate and remain below the upper operating limits (UOLs). Available space can be calculated as follows: Available Space = UOL − Actual Volume.
available volume	Available volume refers to the volume, in US gallons, of waste or process fluid that any vessel can transfer to another vessel and remain above the lower operating limit (LOL). Available volume can be calculated as follows: Available Volume = Actual Volume – LOL.
batch	This refers to material that is being produced or that has been produced by a single execution of a batch process.
batch control	This term refers to control activities and control functions that provide an ordered set of processing activities to complete a batch process.
control system	This term refers to electronic processors that perform regulatory and logic control functions necessary for normal operation of the plant.
exception handling	This term refers to those functions that deal with plant or process contingencies and other events that occur outside the normal or desired behavior of batch control.
intermediate products	These are treated high-level waste (HLW) products that are staged and blended in the pretreatment (PT) facility prior to immobilization in the HLW vitrification facility. These products include treated solids slurry, Sr/TRU precipitate slurry, and cesium concentrates.
LOL	Lower operating limit refers to a vessel low level set point used to stop a transfer-out batch operation from the vessel under normal plant operations.
permissive	A permissive is an interlock that allows a device to change state or a sequence to start. Once a device has changed state or a sequence has started, a permissive has no further effect on the device or sequence.
release	Release is a command under a batch control that opens up a group of equipment for any batch control to acquire.
requested volume	The requested volume is the volume, in US gallons, of waste or process fluid that can be delivered to the destination vessel and the total volume will remain below the vessel's upper operating limit.
Sr/TRU precipitate	For Envelope C feed, the strontium and transuranic elements are precipitated out of solution and separated from the supernate along with any entrained solids to produce the slurry.

trip	A trip is an interlock that does not allow a device to change state or a sequence to start. Once a device has changed state or a sequence has started, a trip continues to have an effect on the device or sequence.
UOL	Upper operating limit refers to a vessel high level setpoint used to stop a transfer-in batch operation to that vessel under normal plant operations.

1 Introduction

This document describes the control logic associated with vessel instrumentation and other ancillary equipment, such as pumps and valves, within the ultrafiltration process (UFP) system in the pretreatment (PT) facility that function to prevent inadvertent overflows within this system through the control system.

2 Applicable Documents

24590-WTP-M6-50-P0001, *P&ID Symbols and Legend Sheet 1 of 6.*

24590-WTP-M6-50-P0002, *P&ID Symbols and Legend Sheet 2 of 6.*

24590-WTP-M6-50-P0003, *P&ID Symbols and Legend Sheet 3 of 6.*

24590-WTP-M6-50-P0004, *P&ID Symbols and Legend Sheet 4 of 6.*

24590-WTP-M6-50-P0005, *P&ID Symbols and Legend Sheet 5 of 6.*

24590-WTP-M6-50-P0006, *P&ID Symbols and Legend Sheet 6 of 6.*

24590-PTF-M6-UFP-P0001, *P&ID-PTF Ultrafiltration Feed Preparation System Vessels UFP-VSL-00001A/B (Q).*

24590-PTF-M6-UFP-P0002, *P&ID-PTF Ultrafiltration System Vessel UFP-VSL-00002A (Q).*

24590-PTF-M6-UFP-P0003, *P&ID-PTF Ultrafiltration System Vessel UFP-VSL-00002B (Q).*

24590-PTF-M6-UFP-P0004, *P&ID-PTF Ultrafiltration Permeate Collection System Vessels UFP-VSL-00062A/B/C (Q).*

24590-PTF-M6-UFP-P0005 *P&ID-PTF Ultrafiltration Utility Services - PSA Rack (Q).*

24590-PTF-M6-UFP-P0006 *P&ID-PTF Ultrafiltration Utility Services - PSA Rack (Q).*

24590-PTF-M6-UFP-P0007 *P&ID-PTF Ultrafiltration Utility Services - PSA Rack (Q).*

24590-PTF-M6-UFP-P0008 *P&ID-PTF Ultrafiltration Utility Services - PSA Rack (Q).*

24590-PTF-M6-UFP-P0009 *P&ID-PTF Ultrafiltration Utility Services - PSA Rack (Q).*

24590-PTF-M6-UFP-P0010 *P&ID-PTF Ultrafiltration Utility Services - PSA Rack (Q).*

24590-PTF-M6-UFP-P0011 *P&ID- PTF Ultrafiltration Utility Services - PSA Rack (Q).*

24590-PTF-M6-UFP-P0015, *P&ID-PTF Ultrafiltration Utility Services – Plant Wash Rack (Q).*

24590-PTF-M6-UFP-P0016, *P&ID-PTF Ultrafiltration Reagent & Process Air Bulge (Q).*

24590-PTF-M6-UFP-P0017, *P&ID-PTF Ultrafiltration Reagent & Process Air Bulge (Q).*

3 Description

The following sections describe the seven major vessels that make up the ultrafiltration system and the associated instrumentation.

3.1 Ultrafiltration Feed Preparation Vessel , UFP-VSL-00001A

Vessel UFP-VSL-00001A is one of two feed preparation vessels. During normal operations, this vessel may receive feed from the high-level waste (HLW) lag storage and feed blending process (HLP) system, the waste feed receipt process (FRP) system, and/or the waste feed evaporation process (FEP) system. A specific volume will be requested by the ultrafiltration feed preparation vessel (UFP-VSL-00001A) from each of these systems. The volumes requested will also account for additional space to receive process condensate for dilution and precipitation reagents as required (Envelope C) , and still be within the upper operating limit (UOL) of the vessel. Once blended, these feeds are transferred out to the ultrafiltration feed vessels (UFP-VSL-00002A or UFP-VSL-00002B).

For better control of any transfer operation for the ultrafiltration feed preparation vessel (UFP-VSL-00001A), transfers are limited by the batch control operation to one transfer in or out at a time. Once the batch control performs the "acquire" step involving the ultrafiltration feed preparation vessel (UFP-VSL-00001A); no other batch control operation is able to acquire the vessel until the vessel is released from the initial operation. The steps involving acquiring and releasing ensure that this vessel cannot transfer in or out from multiple destinations at the same time.

When the vessel is available to receive feed, the operator will initiate the transfer-in sequence. Once the sequence is initiated, the control system will verify that all instruments, utilities, and equipment associated with the transfer are within operational parameters. If any of the parameters are not within the specified limits during the transfer, the control system will switch to an exception handling function. Under normal operating conditions the sequence will be stopped if any of the following occurs:

- The specified volume is transferred.
- The level in the ultrafiltration feed preparation vessel (UFP-VSL-00001A) reaches its UOL.
- The source vessel reaches its lower operating level (LOL).

Once the vessel has been filled, cooled (if required), and sampling is completed as required, the control system will notify the operator that the ultrafiltration feed preparation vessel (UFP-VSL-00001A) is ready to transfer out. The transfer-out sequence can then be initiated by the receiving system. Once initiated, the control system verifies that all instruments, utilities, and equipment associated with the transfer are within operational parameters. If any of the parameters are not within the specified limits during the transfer, the control system will switch to an exception handling function. Under normal operating conditions the sequence will be stopped if any of the following occurs:

- The level in the ultrafiltration feed preparation vessel (UFP-VSL-00001A) reaches its LOL.
- A specified volume is transferred.
- The destination vessel reaches its UOL.

During the entire transfer-in or transfer-out sequence, the control system constantly monitors the sump alarms within the PT facility and notifies the operator if an alarm condition occurs. The operator can then decide whether to manually stop the transfer. The position switches of valves are also constantly monitored by the control system. If any of the associated valves are in the wrong position the batch control will switch to an exception handling function.

All of the above controls will prevent an overflow in the ultrafiltration feed preparation vessel UFP-VSL-00001A.

Refer to Figure 1 for level measurement details for the ultrafiltration feed preparation vessel UFP-VSL-00001A.

3.2 Ultrafiltration Feed Preparation Vessel, UFP-VSL-00001B

Ultrafiltration feed preparation vessel (UFP-VSL-00001B) performs the same functions as the ultrafiltration feed preparation vessel (UFP-VSL-00001A) mentioned above. The batch controls, however, will be programmed such that vessels UFP-VSL-00001A and UFP-VSL-00001B will operate on alternate modes, with one vessel receiving feed (transferring in) while the other vessel is feeding the ultrafilter loops (transferring out).

The batch controls for the ultrafiltration feed preparation vessel (UFP-VSL-00001B) are identical to those for ultrafiltration feed preparation vessel (UFP-VSL-00001A).

Refer to Figure 2 for level measurement details for the ultrafiltration feed preparation vessel (UFP-VSL-00001B).

3.3 Ultrafiltration Feed Vessel, UFP-VSL-00002A

Vessel UFP-VSL-00002A is one of two ultrafiltration feed vessels. It receives feed from one of the ultrafiltration feed preparation vessels (UFP-VSL-00001A or UFP-VSL-00001B). The feed is concentrated to 20 wt % solids in this vessel by continuously recirculating the feed through a series of ultrafilters. The liquid fraction (permeate) is transferred to one of the three permeate collection vessels (UFP-VSL-00062A, UFP-VSL-00062B, or UFP-VSL-00062C). To account for the volume loss in the vessel due to liquid fraction (permeate) being transferred out, fresh feed is constantly added from one of the ultrafiltration feed preparation vessels (UFP-VSL-00001A or UFP-VSL-00001B). Upon reaching 20 wt % solids (15 wt % for Envelope C), the concentrated solids are washed, leached (if required) and post washed before being transferred to one of the HLW lag storage vessels (HLP-VSL-00027A or HLP-VSL-00027B). There is also the capability to transfer the solids directly to the HLW blend vessel (HLP-VSL-00028). If the concentrated solids meet the requirement of low-activity waste (LAW) feed, these solids can then be transferred to the LAW concentrate buffer vessel (TCP-VSL-00001). If further concentration of solids is required, a transfer to the evaporator feed vessel (FEP-VSL-00017B) is also possible.

For better control of any transfer operation involving the ultrafiltration feed vessel (UFP-VSL-00002A), transfers are limited by the batch control operation to one transfer in or out at a time. Once the batch control performs the "acquire" step involving the ultrafiltration feed vessel (UFP-VSL-00002A), no other batch control operation is able to acquire the vessel until the vessel is released from the initial operation. The steps involving acquiring and releasing ensure that this vessel cannot transfer in or out from multiple destinations at the same time.

When the vessel is available to receive feed, the operator will initiate the transfer-in sequence. Once the sequence is initiated, the control system will verify that all instruments, utilities, and equipment associated with the transfer are within operational parameters. If any of the parameters are not within the specified limits during the transfer, the control system will switch to an exception handling function. Under normal operating conditions the sequence will be stopped if any of the following occurs:

- The level in the ultrafiltration feed vessel (UFP-VSL-00002A) reaches its UOL.
- A specified volume is transferred.
- The source vessel reaches its LOL.

At this point the ultrafiltration sequence can be initiated. Once initiated, the concentration to 20 wt % and the separation of liquid fraction (permeate) from the solids fractions begins. The permeate will be collected in one of the three permeate collection vessels (UFP-VSL-00062A, UFP-VSL-00062B, or UFP-VSL-00062C). During this sequence, the control system will verify that all instruments, utilities, and equipment associated with the transfer are within operational parameters. If any of the parameters are not within the specified limits during the transfer, the control system will switch to an exception handling function.

Once the concentration to 20 wt % is complete, the solids are washed and leached (if required). The control system will then notify the operator that vessel UFP-VSL-00002A is ready for sampling and transfer-out. Once the transfer-out sequence is initiated, the control system verifies that all instruments, utilities, and equipment associated with the transfer are within operational parameters. If any of the parameters are not within the specified limits during the transfer, the control system will switch to an exception handling function. Under normal operating conditions the sequence will be stopped if any of the following occurs:

- The level in the ultrafiltration feed vessel (UFP-VSL-00002A) reaches its LOL.
- A specified volume is transferred.
- The destination vessel reaches its UOL.

During the entire transfer-in or transfer-out sequence, the control system constantly monitors the sump alarms within the PT facility and notifies the operator if an alarm condition occurs. The operator can then decide whether to manually stop the transfer. The position switches of valves are also constantly monitored by the control system. If any of the associated valves are in the wrong position the batch control will switch to an exception handling logic.

All of the above controls will prevent an overflow in ultrafiltration feed vessel UFP-VSL-00002A.

Refer to Figure 3 for level measurement details for the ultrafiltration feed vessel UFP-VSL-00002A.

3.4 Ultrafiltration Feed Vessel, UFP-VSL-00002B

Vessel UFP-VSL-00002B performs the same functions as vessel UFP-VSL-00002A mentioned above. The batch controls, however, will be programmed such that vessels UFP-VSL-00002A and UFP-VSL-00002B will operate on alternate modes, with one vessel in the ultrafiltration cycle (concentrating) while

the other vessel is in solids treatment. Solids treatment consists of solids washing and solids leaching (if required) and post washing. There is also the cleaning cycle for ultrafilters that will not pose an overflow condition, and hence is not covered in this document.

The batch controls for the ultrafiltration feed vessel UFP-VSL-00002B are identical to those for ultrafiltration feed vessel UFP-VSL-00002A.

Refer to Figure 4 for level measurement details for ultrafiltration feed vessel UFP-VSL-00002B.

3.5 Permeate Collection Vessel, UFP-VSL-00062A

Vessel UFP-VSL-00062A is one of three permeate collection vessels that can be used for collecting the permeate (liquid fraction) during the ultrafiltration concentration cycle or for collecting the wash permeate during the solids treatment (washing, leaching), from the ultrafiltration feed vessels (UFP-VSL-00002A or vessel UFP-VSL-00002B). If the vessel is used to receive permeate, the collected permeate is sampled, then transferred out to the cesium ion exchange process (CXP) system for further processing. Off-specification permeate (excessive turbidity) is transferred back to one of the ultrafiltration feed preparation vessels (UFP-VSL-00001A or UFP-VSL-00001B). If the vessel is used to receive wash permeate, the collected wash permeate is transferred out to one of the acidic/alkaline effluent collection vessels (PWD-VSL-00015 or PWD-VSL-00016). The above functions are interchangeable between the three vessels and depend on the function assigned by the operator at that time.

The transfer-in sequence into this vessel is part of the ultrafiltration batch control operation being performed for one of the ultrafiltration feed vessels (UFP-VSL-00002A or UFP-VSL-00002B). Under normal operating conditions this sequence will switch to another permeate vessel when the level in permeate collection vessel UFP-VSL-00062A reaches its UOL.

When the UOL has been reached and sampling is completed as required, the control system will notify the operator that the permeate collection vessel UFP-VSL-00062A is ready to transfer out. The transfer-out sequence can then be initiated by the receiving system. Once initiated, the control system verifies that all instruments, utilities, and equipment associated with the transfer are within operational parameters. If any of the parameters are not within the specified limits during the transfer, the control system will switch to an exception handling function. Under normal operating conditions the sequence will be stopped if any of the following occurs:

- The level in the permeate collection vessel (UFP-VSL-00062A) reaches its LOL.
- A specified volume is transferred.
- The destination vessel reaches its UOL.

During the entire transfer-in or transfer-out sequence, the control system constantly monitors the sump alarms within the PT facility and notifies the operator if an alarm condition occurs. The operator can then decide whether to manually stop the transfer. The position switches of valves are also constantly monitored by the control system. If any of the associated valves are in the wrong position, the batch control will switch to an exception handling function.

Refer to Figure 5 for level measurement details for the permeate collection vessel UFP-VSL-00062A.

3.6 Permeate Collection Vessel, UFP-VSL-00062B

Vessel UFP-VSL-00062B performs the same functions as vessel UFP-VSL-00062A mentioned above. The batch controls for permeate collection vessel UFP-VSL-00062B are identical to those for permeate collection vessel UFP-VSL-00062A.

Refer to Figure 6 for level measurement details for the permeate collection vessel UFP-VSL-00062B.

3.7 Permeate Collection Vessel, UFP-VSL-00062C

Vessel UFP-VSL-00062C performs the same functions as permeate collection vessel UFP-VSL-00062A and permeate collection vessel UFP-VSL-00062B mentioned above. The batch controls for permeate collection vessel UFP-VSL-00062C are identical to those for permeate collection vessels UFP-VSL-00062A and UFP-VSL-00062B.

Refer to Figure 7 for level measurement details for the permeate collection vessel UFP-VSL-00062C.

Figure 1. Level Measurement for Ultrafiltration Feed Preparation Vessel (UFP-VSL-00001A)

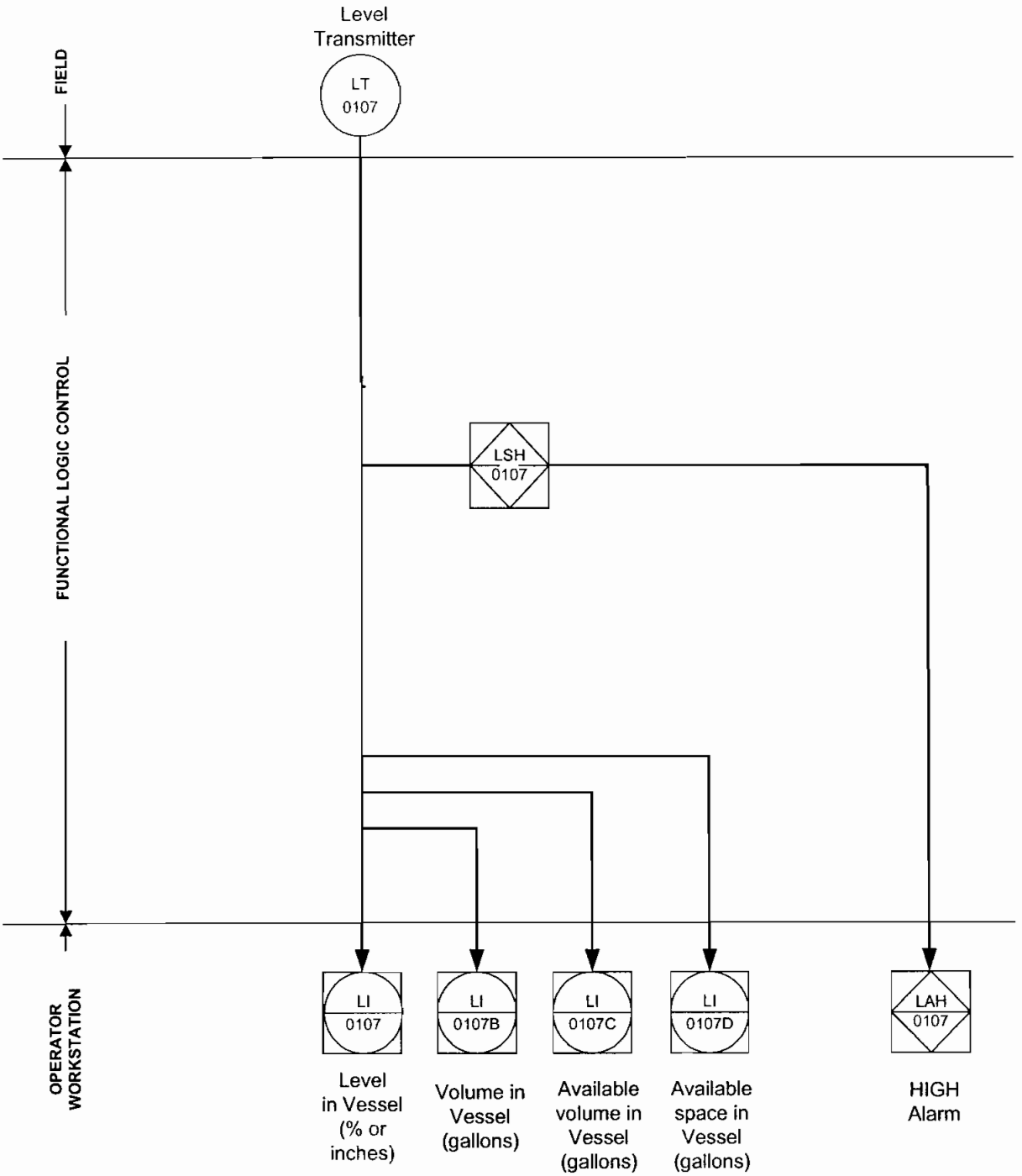

Figure 2. Level Measurement for Ultrafiltration Feed Preparation Vessel (UFP-VSL-00001B)

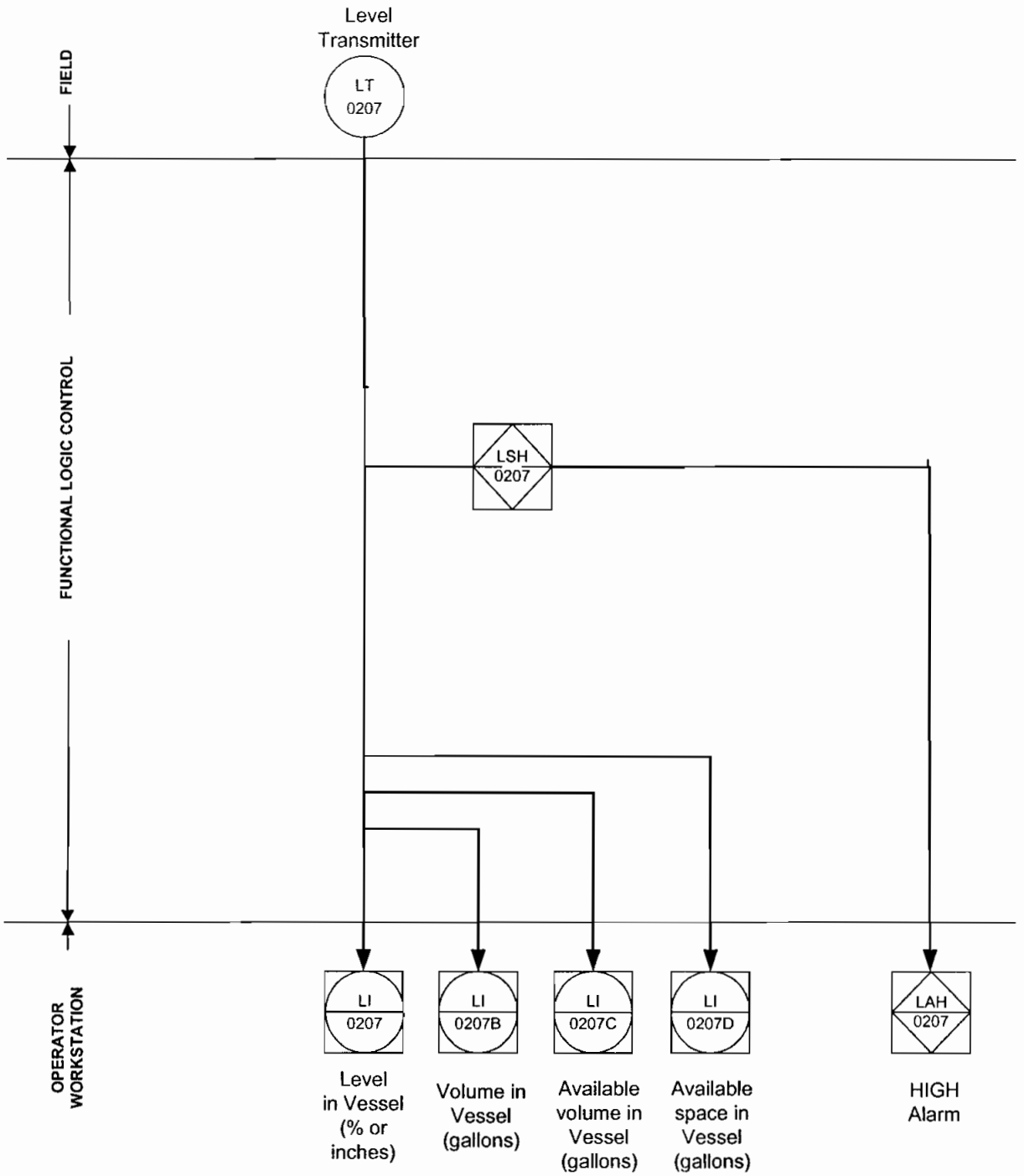

Figure 3. Level Measurement for Ultrafiltration Feed Vessel (UFP-VSL-00002A)

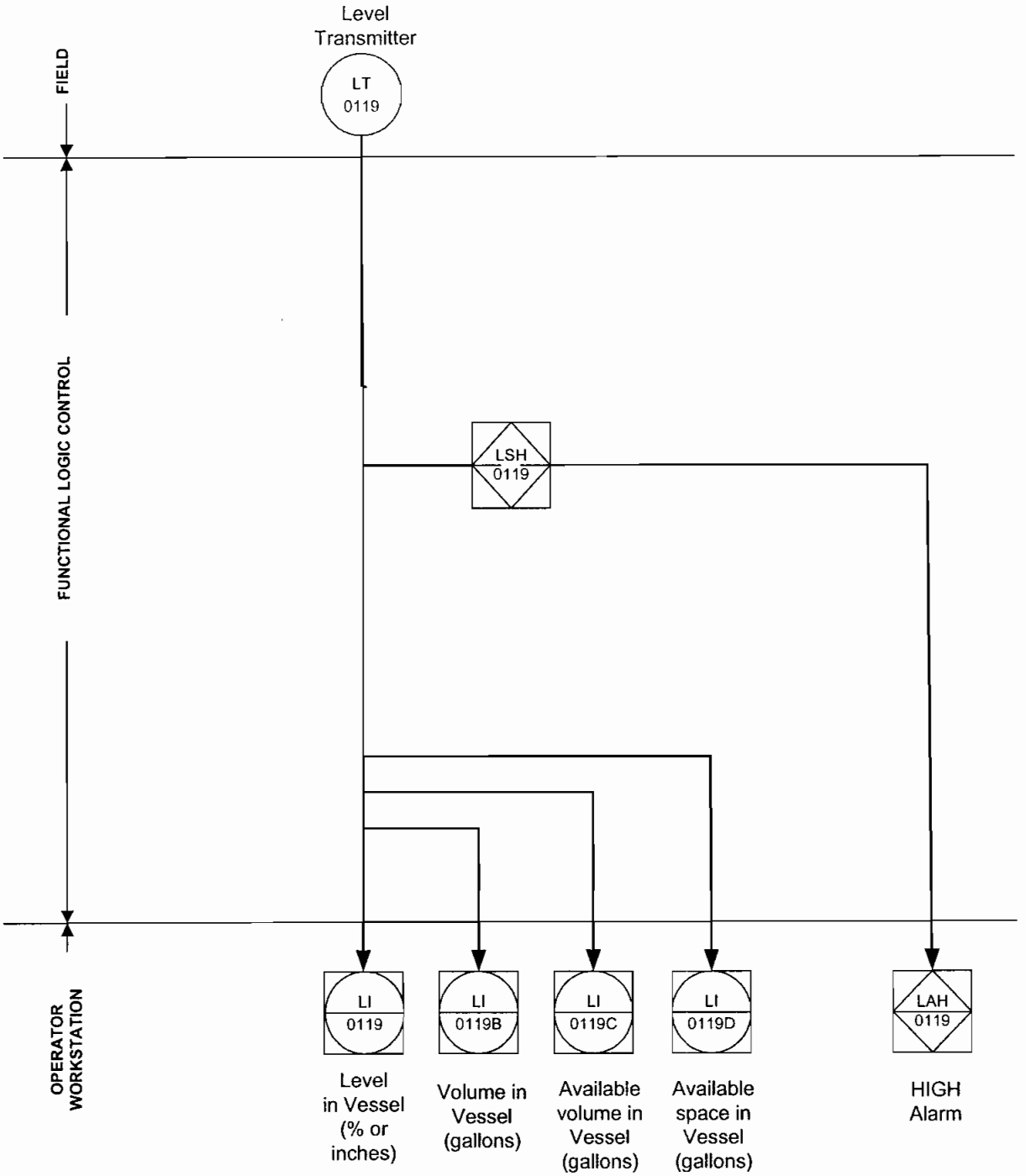

Figure 4. Level Measurement for Ultrafiltration Feed Vessel (UFP-VSL-00002B)

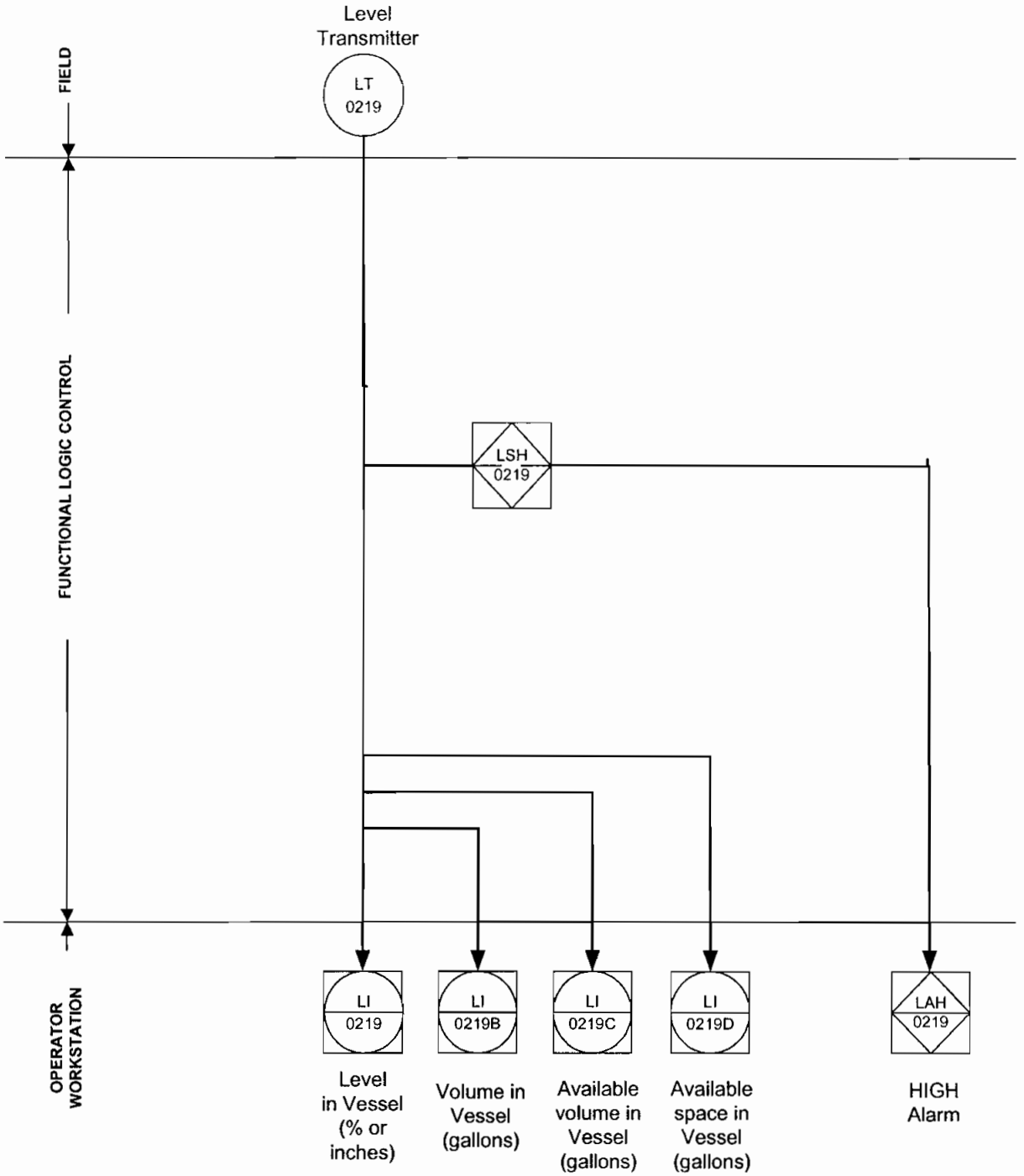

Figure 5. Level Measurement for Permeate Collection Vessel (UFP-VSL-00062A)

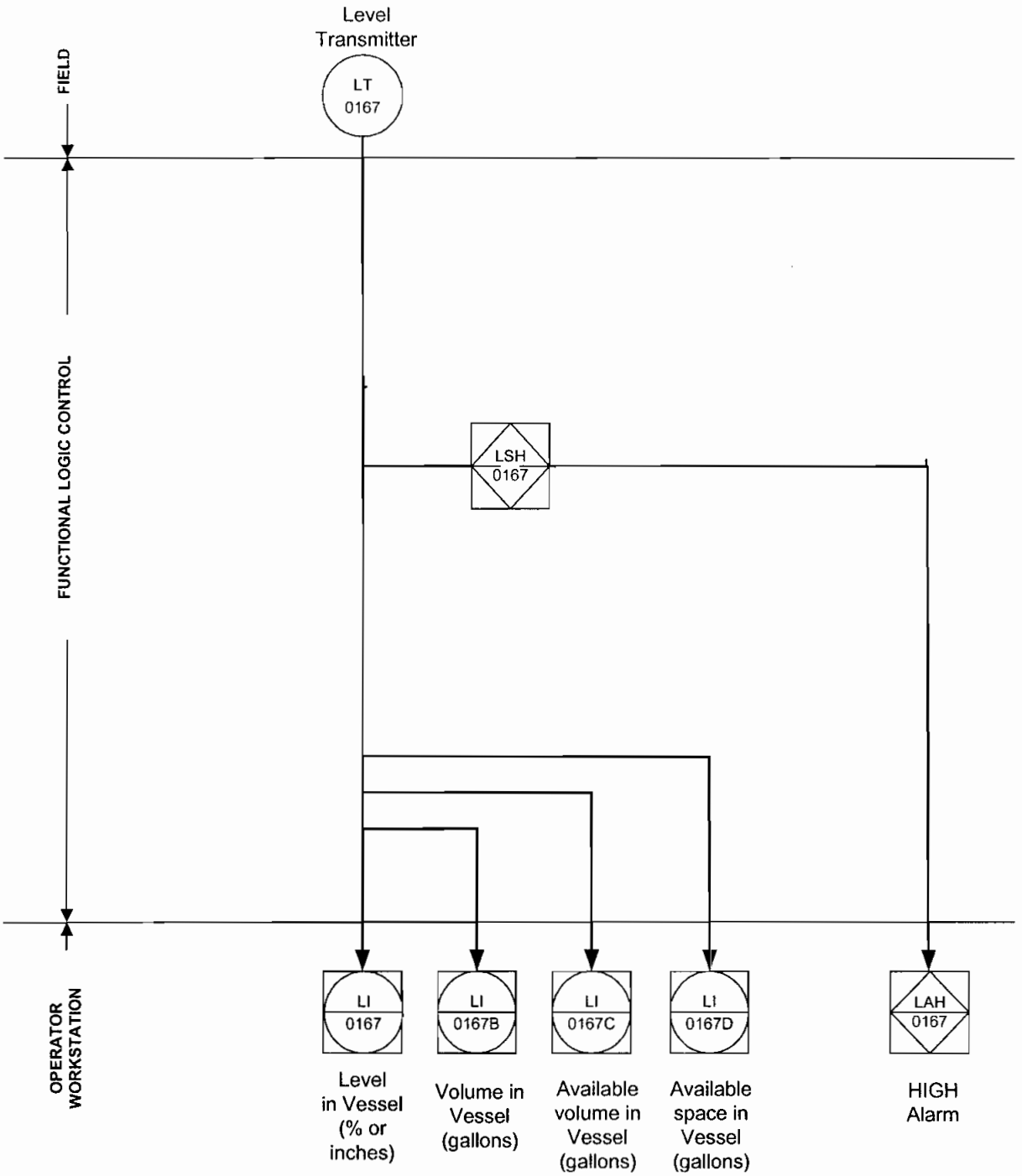

Figure 6. Level Measurement for Permeate Collection Vessel (UFP-VSL-00062B)

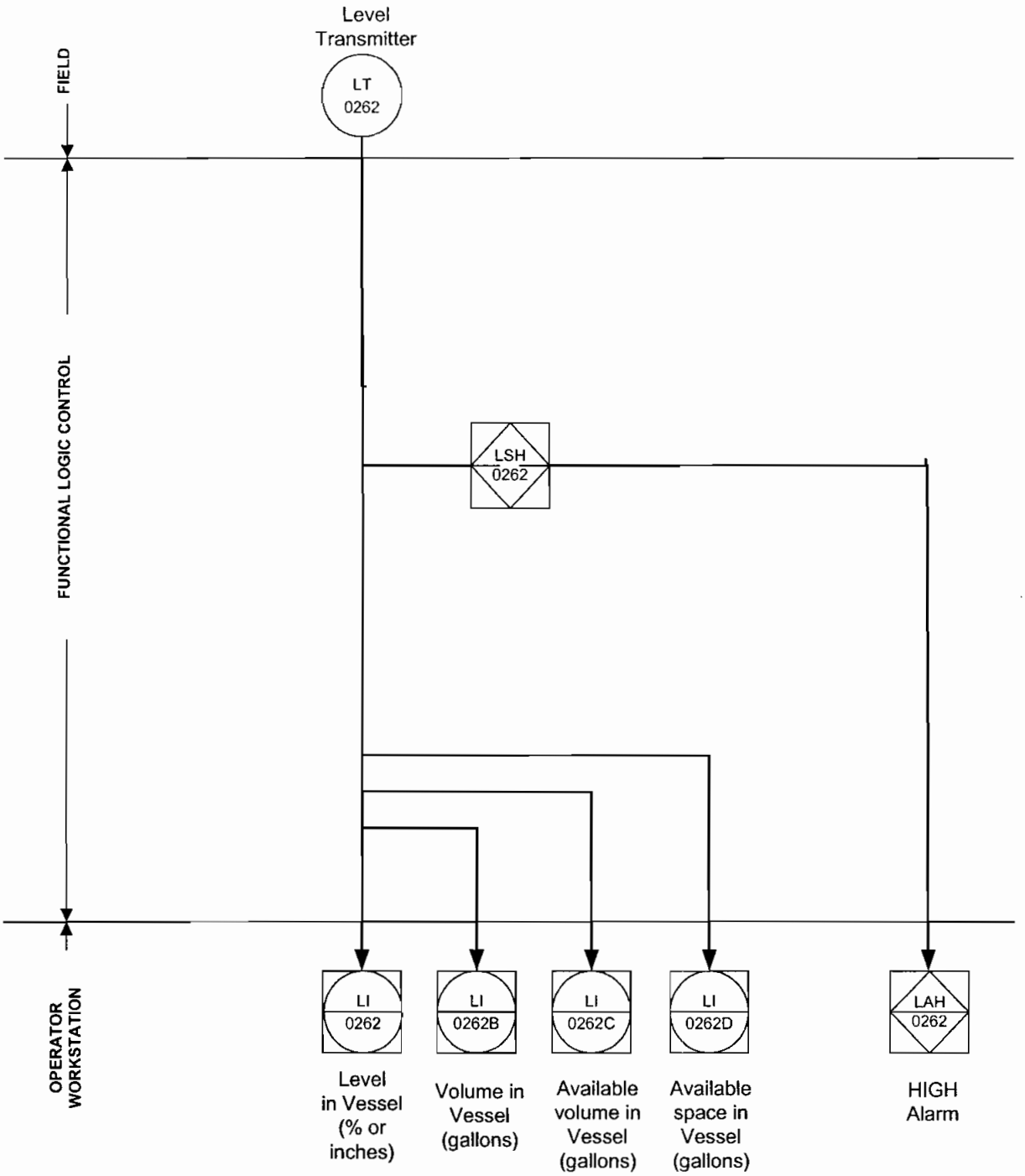

Figure 7. Level Measurement for Permeate Collection Vessel (UFP-VSL-00062C)

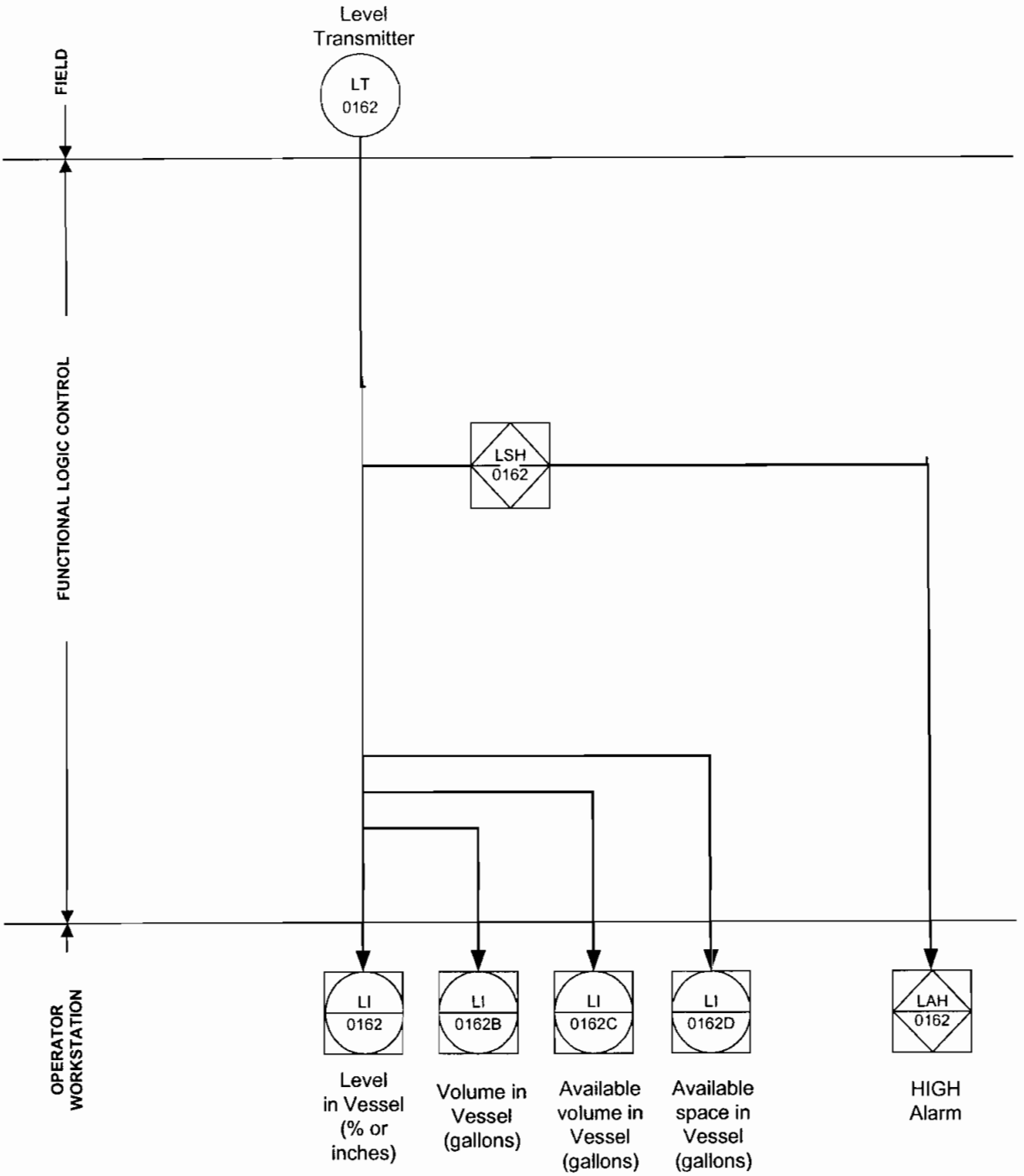

ISSUED BY
RPP-WTP PDC
TSM 5/20/04
INIT DATE

R10314037

Document title: **System Logic Description for Pretreatment Facility Cs Ion Exchange Process (CXP) System**

Contract number: DE-AC27-01RV14136

Department: Controls and Instrumentation

Author(s): Mark Woodworth Mark A. Friedrich

Principal author signature: Mark A Friedrich

Document number: 24590-PTF-PER-J-02-005, Rev 0

Checked by: Paul Schmitz

Checker signature: Paul Schmitz

Date of issue: 20 May 04

Issue status: Issued for Permitting Use

Approved by: Steve E. Anderson

Approver's position: C&I Engineering Manager

Approver signature: S.E. Anderson

MARK A. FRIEDRICH
STATE OF WASHINGTON
32426
REGISTERED PROFESSIONAL ENGINEER
Mark A Friedrich
5-20-04
EXPIRES: 08/31/2004

This bound document contains a total of 17 sheets

River Protection Project
Waste Treatment Plant
2435 Stevens Center Place
Richland, WA 99352
United States of America
Tel: 509 371 2000

Notice

Please note that source, special nuclear, and byproduct materials, as defined in the Atomic Energy Act of 1954 (AEA), are regulated at the US Department of Energy (DOE) facilities exclusively by DOE acting pursuant to its AEA authority. DOE asserts, that pursuant to the AEA, it has sole and exclusive responsibility and authority to regulate source, special nuclear, and byproduct materials at DOE-owned nuclear facilities. Information contained herein on radionuclides is provided for process description purposes only.

History Sheet

Rev	Date	Reason for revision	Revised by
0	May 20, 2004	Issued for Permitting Use	MGW

Contents

Notice ii
History Sheet iii
Acronyms and Abbreviations v
Glossary vi
1 Introduction 1
2 Applicable Documents 1
3 Description 1
3.1 CXP-VSL-00001 2
3.2 CXP-VSL-00004 3
3.3 CXP-VSL-00005 3
3.4 CXP-VSL-00026A/B/C 4
3.5 CXP-IXC-00001/2/3/4 5
3.6 CXP-BULGE-00004 5

Figures

Figure 1. Level Measurement for Cs Ion Exchange Feed Vessel (CXP-VSL-00001) 6
Figure 2. Level Measurement for Cs IX Caustic Rinse Collection Vessel (CXP-VSL-00004) 7
Figure 3. Level Measurement for Cs IX Reagent Vessel (CXP-VSL-00005) 8
Figure 4. Level Measurement for Cs Ion Exchange Treated LAW Collection Vessel (Typical for CXP-VSL-00026A/B/C) 9
Figure 5. Rupture Disk Indication for Cs IX Columns (Typical CXP-IXC-00001/2/3/4) 10
Figure 6. Level Switch for Cs IX Process Bulge (CXP-BULGE-00004) 11

Acronyms and Abbreviations

AI	Analog input
CNP	Cesium Nitric Acid Recovery Process System
CXP	Cesium Ion Exchange Process System
DI	Discrete input
HLP	HLW Lag Storage and Feed Blending Process System
IX	Ion exchange
LAH	Level alarm high
LAHH	Level alarm high high
LI	Level indication
LOL	Lower operating limit
LP	Low pressure
LSH	Level switch high
LSHH	Level switch high-high
LT	Level transmitter
P&ID	Piping and instrumentation diagram
PT	Pretreatment
PWD	Plant Wash & Disposal
RDP	Spent Resin Collection and Dewatering Process System
UFP	Ultrafiltration Process System
UOL	Upper operating limit
WTP	River Protection Project - Waste Treatment Plant

Glossary

acquire	Acquire is a command under a batch control that reserves a group of equipment for that particular batch control operation.
batch	The material that is being produced or that has been produced by a single execution of a batch process.
batch control	This term refers to control activities and control functions that provide an ordered set of processing activities to complete a batch process.
batch process	The production of a finite quantity of material by subjecting quantities of input material to an ordered set of processing activities over a finite period of time using one or more pieces of equipment.
control system	Electronic Processors that perform regulatory and logic control functions necessary for plant normal operation.
exception handling	Those functions that deal with plant or process contingencies and other Logic events, which occur outside the normal or desired behavior of batch control.
interlock	This term refers to a mechanism that automatically brings about or prevents the operation of another mechanism.
lower operating limit	A vessel low-level set point used to stop a transfer-out batch operation from the vessel under normal plant operations.
permissive	Interlock which allows a device to change state or a sequence to start. Once a device has changed state or a sequence started, a permissive has no further effect on the device or sequence.
release	A command under a batch control, that opens up a group of equipment for any batch control to acquire.
trip	A trip is a conditional interlock that forces a device or a sequence to a defined state. A trip continues to have an effect on the device or sequence until the interlock condition no longer exist.
upper operating limit	A vessel high-level setpoint used to stop a transfer-in batch operation to the vessel under normal plant operation.

1 Introduction

This document describes the instrument control logic for tank and ancillary equipment for the Cs Ion Exchange Process System (CXP) within the pretreatment (PT) facility that are associated with dangerous waste management.

2 Applicable Documents

24590-WTP-M6-50-P0001, *P&ID Symbols and Legend Sheet 1 of 6*

24590-WTP-M6-50-P0002, *P&ID Symbols and Legend Sheet 2 of 6*

24590-WTP-M6-50-P0003, *P&ID Symbols and Legend Sheet 3 of 6*

24590-WTP-M6-50-P0004, *P&ID Symbols and Legend Sheet 4 of 6*

24590-WTP-M6-50-P0005, *P&ID Symbols and Legend Sheet 5 of 6*

24590-WTP-M6-50-P0006, *P&ID Symbols and Legend Sheet 6 of 6*

24590-PTF-M6-CXP-P0001, *P&ID - PTF Cesium Ion Exchange Process Vessels System*

24590-PTF-M6-CXP-P0002, *P&ID - PTF Cesium Ion Exchange Columns System*

24590-PTF-M6-CXP-P0003, *P&ID - PTF Cesium Ion Exchange Columns System*

24590-PTF-M6-CXP-P0005, *P&ID - PTF Cesium Ion Exchange Utility Services - PSA Rack*

24590-PTF-M6-CXP-P0007, *P&ID - PTF Cesium Ion Exchange Utility Services - Plant Wash Rack*

24590-PTF-M6-CXP-P0010, *P&ID - PTF Cesium Ion Exchange Treated LAW Collection Vessels System*

24590-PTF-M6-CXP-P0011, *P&ID - PTF Cesium Ion Exchange Utility Services - PSA Rack*

24590-PTF-M6-CXP-P0012, *P&ID - PTF Cesium Ion Exchange Utility Services - PSA Rack*

24590-PTF-M6-CXP-P0013, *P&ID - PTF Cesium Ion Exchange Utility Services - Plant Wash Rack*

3 Description

The following plant items and ancillary equipment are associated with dangerous waste management within the CXP system, which resides in the PT facility.

- Cs Ion Exchange Feed Vessel (CXP-VSL-00001)
- Cs IX Caustic Rinse Collection Vessel (CXP-VSL-00004)
- Cs IX Reagent Vessel (CXP-VSL-00005)
- Cs Ion Exchange Treated LAW Collection Vessels (CXP-VSL-00026A/B/C)
- Cs Ion Exchange Columns (CXP-IXC-00001/2/3/4)
- Cs IX Process Bulge (CXP-BULGE-00004)

The Cs Ion Exchange Columns (CXP-IXC-00001/2/3/4) will not have a level control associated with them and will operate as flooded columns. Process fluids are pumped from the source vessel, through the CXP-IXC-00001/2/3/4 to the destination vessel.

3.1 CXP-VSL-00001

The Cs Ion Exchange Feed Vessel (CXP-VSL-00001) receives batches of LAW feed from the UFP system and provides a continuous feed to the Cs IX columns. CXP-VSL-00001 receives six batches of LAW feed over approximately five days from the UFP system. These six transfers build an inventory of LAW feed in the CXP-VSL-00001, which is used to maintain a continuous feed to the IX columns for six days, allowing the UFP system to operate on a six day cycle feeding the CXP system for 5 days and shutting down one day for cleaning without interrupting feed to the IX columns. CXP-VSL-00001 may also receive recycled LAW from the Cs Ion Exchange Treated LAW Collection Vessels (CXP-VSL-00026A/B/C) if after sampling it is determined that reprocessing of the LAW feed is required and receives displaced LAW feed from the IX columns each regeneration cycle.

Prior to a batch of LAW feed being transferred to CXP-VSL-00001 it is sampled in the UFP system to ensure CXP requirements have be met. Once the sample is confirmed, the operator will initiate the transfer of a batch of LAW feed to the CXP-VSL-00001. Once the sequence is initiated, the control system will verify that instruments, utilities, and equipment associated with the transfer are within operational parameters. If any of the monitored parameters are not within the specified limits during the transfer, the control system will switch to exception handling logic. The transfer is stopped by the control system when any of the following are true:

- The level in the Cs Ion Exchange Feed Vessel (CXP-VSL-00001) reaches its upper operating limit (UOL)
- The level of the UFP vessel reaches its lower operating limit (LOL)

Once LAW feed has been passed through the IX columns to remove Cs to meet LAW vitrification requirements the processed LAW is sampled in the Cs Ion Exchange Treated LAW Collection Vessels (CXP-VSL-00026A/B/C). If the sample determines the LAW feed must be reprocessed to meet LAW glass requirements the batch is recycled to CXP-VSL-00001. The operator will then initiate the transfer of the LAW feed from the Cs Ion Exchange Treated LAW Collection Vessel to CXP-VSL-00001. Once the sequence is initiated, the control system will verify that instruments, utilities, and equipment associated with the transfer are within operational parameters. If any of the monitored parameters are not within the specified limits during the transfer, the control system will switch to exception handling logic. The transfer is stopped by the control system when any of the following are true

- The level in the Cs Ion Exchange Feed Vessel (CXP-VSL-00001) reaches its UOL
- The level of the Cs Ion Exchange Treated LAW Collection Vessel reaches its lower operating limit (LOL)

During regeneration of an IX column the LAW feed is displaced from the column with 0.1M NaOH. The displaced LAW feed is sent to CXP-VSL-00001. This is an operator initiated sequence. Once the sequence is initiated, the control system will verify that instruments, utilities, and equipment associated with the transfer are within operational parameters. If any of the monitored parameters are not within the specified limits during the transfer, the control system will switch to exception handling logic. The transfer is stopped by the control system when any of the following are true

- The level in the Cs Ion Exchange Feed Vessel (CXP-VSL-00001) reaches its UOL
- The target volume of regenerant has been transferred from the IX column to the Cs IX Caustic Rinse Collection Vessel (CXP-VSL-00004).

If the level is not within the normal operating range, interlocks along with alarms help prevent an overflow condition. At the high alarm set point, an alarm is generated. At the high-high alarm set point, an alarm is generated and all dedicated controlled feeds are isolated. Isolation occurs by a combination of either stopping the motive force, closing valves, or a combination of these actions. Figure 1, shows the typical interlocks and alarms for the level instruments associated with the Cs Ion Exchange Feed Vessel (CXP-VSL-00001).

3.2 CXP-VSL-00004

The Cs IX Caustic Rinse Collection Vessel (CXP-VSL-00004) receives spent regenerant from the Cs IX columns each regeneration cycle. The spent regenerant will then be used as the LAW displacement fluid during the next IX column regeneration cycle. If it is determined that the spent regenerant is not concentrated enough 0.25M NaOH may be added to increase the molarity of the spent regenerant or the spent regenerant may be sent to plant wash.

An operator initiates each step in the CXP system; once the post elution rinse of an IX column is complete the operator will initiate the regeneration sequence for the IX column undergoing regeneration and select the destination for the spent regenerant. If the Cs IX Caustic Rinse Collection Vessel (CXP-VSL-00004) is selected for the destination of the spent regenerant the valves are aligned and the transfer initiated. Once the sequence is initiated, the control system will verify that instruments, utilities, and equipment associated with the transfer are within operational parameters. If any of the monitored parameters are not within the specified limits during the transfer, the control system will switch to exception handling logic. The transfer is stopped by the control system when any of the following are true for a respective transfer:

- The level in the Cs IX Caustic Rinse Collection Vessel (CXP-VSL-00004) reaches its UOL.
- The target volume of regenerant has been transferred from the IX column to the Cs IX Caustic Rinse Collection Vessel (CXP-VSL-00004).

If it is determined that the spent regenerant molarity is not adequate for LAW displacement, 0.25M NaOH is added to the Cs IX Caustic Rinse Collection Vessel (CXP-VSL-00004) to increase the molarity of the spent regenerant. Also process condensate may be added to CXP-VSL-00004 for make-up volume or dilution. Transfers of either 0.25M NaOH or process condensate to CXP-VSL-00004 are initiated by an operator. Once the sequence is initiated, the control system will verify that instruments, utilities, and equipment associated with the transfer are within operational parameters. If any of the monitored parameters are not within the specified limits during the transfer, the control system will switch to exception handling logic. The transfer is stopped by the control system when any of the following are true for a respective transfer:

- The level in the Cs IX Caustic Rinse Collection Vessel (CXP-VSL-00004) reaches its UOL.
- The target volume of fresh reagent (0.25M NaOH) or process condensate has been transferred to Cs IX Caustic Rinse Collection Vessel (CXP-VSL-00004).

If the level is not within the normal operating range, interlocks along with alarms help prevent an overflow condition. At the high alarm set point, an alarm is generated. At the high-high alarm set point, an alarm is generated and all dedicated controlled feeds are isolated. Isolation occurs by a combination of either stopping the motive force, closing valves, or a combination of these actions. Figure 2 shows the interlocks and alarms for the level instrument associated with the Cs IX Caustic Rinse Collection Vessel (CXP-VSL-00004).

3.3 CXP-VSL-00005

The Cs IX Reagent Vessel (CXP-VSL-00005) receives 0.1M NaOH, 0.25M NaOH, DIW, and 0.5M nitric acid from the fresh reagent system. CXP-VSL-00005 also receives spent regenerant to be used as displacement fluid from the Cs IX Caustic Rinse Collection Vessel (CXP-VSL-00004). For greater waste management reliability, batch controlled transfers into CXP-VSL-00005 are limited by the control system to one transfer in or out at a time by the batch control mechanism of acquiring and releasing.

The fresh reagents sent to CXP-VSL-00005 are used during regeneration, 0.25M NaOH and distilled water are used each time an IX column is regenerated and the 0.5M nitric acid and the 0.1M NaOH are used as off normal sources if the normal source for the respective reagents is unavailable. Each reagent transfer to CXP-VSL-00005 is operator initiated. The level in CXP-VSL-00005 operates on a deadband starting flow to the vessel at low level and stopping flow when a high level is reached. Once the sequence is initiated, the control system will verify that instruments, utilities, and equipment associated with the transfer are within operational parameters. If any of the monitored parameters are not within the specified limits during the transfer, the control system will switch to exception handling logic. The transfer is stopped by the control system when the following is true:

- The target volume of reagent has been transferred to the CXP system to complete the regeneration step of an IX column.

If spent regenerant is used to perform the LAW displacement step of a column regeneration, the fluid is transferred from the Cs IX Caustic Rinse Collection Vessel (CXP-VSL-00004) to the Cs IX Reagent Vessel (CXP-VSL-00005) via an RFD. The transfer is initiated by an operator and uses a deadband level control in order to control level in the CXP-VSL-00005, starting flow to the vessel at low level and stopping flow when a high level is reached. Once the sequence is initiated, the control system will verify that instruments, utilities, and equipment associated with the transfer are within operational parameters. If any of the monitored parameters are not within the specified limits during the transfer, the control system will switch to exception handling logic. The transfer is stopped by the control system when one of the following is true

- The target volume of reagent has been transferred to the CXP system to complete the regeneration step of an IX column.
- The level in the Cs IX Caustic Rinse Collection Vessel (CXP-VSL-00004) reaches its LOL.

If the level is not within the normal operating range, interlocks along with alarms help prevent an overflow condition. At the high alarm set point, an alarm is generated. At the high-high alarm set point, an alarm is generated and all dedicated controlled feeds are isolated. Isolation occurs by a combination of either stopping the motive force, closing valves, or a combination of these actions. Figure 3 shows the interlocks and alarms for the level instrument associated with the Cs IX Reagent Vessel (CXP-VSL-00005).

3.4 CXP-VSL-00026A/B/C

Cs Ion Exchange Treated LAW Collection Vessels (CXP-VSL-00026A/B/C) operate together to ensure continuous processing of LAW feed occurs. Each vessel operates on a 72-hour cycle where it receives one batch of treated LAW feed from the IX columns over 24 hours, samples the LAW feed to ensure compliance over the next 24 hours, and then discharges the LAW feed to the TLP system over the final 24 hours of the cycle. To ensure continuous processing of LAW feed the vessels operate out of phase; thus, one vessel undergoes filling, while another vessel's contents are sampled, the third vessels contents are discharged.

Prior to a Cs Ion Exchange Treated LAW Collection Vessel the vessel must be in the correct state. The control system will check the state of the vessel to confirm its availability before to a transfer of LAW can take place. Once the vessel state is confirmed a transfer of LAW feed from the Cs IX columns can be initiated. Once the sequence is initiated, the control system will verify that instruments, utilities, and equipment associated with the transfer are within operational parameters. If any of the monitored parameters are not within the specified limits during the transfer, the control system will switch to exception handling logic. The transfer is stopped by the control system when one of the following is true:

- The level in the Cs Ion Exchange Treated LAW Collection Vessel reaches its UOL.

CXP-VSL-00026A/B/C are filled in full batches. However, if breakthough of an ion exchange column occurs the transfer is stopped, the IX columns are realigned to remove the lead column from the LAW processing train and shift the lag column to the lead position, polish column to the lag position and the regenerated column to the polish position and processing of LAW feed is restarted. The transfer of feed into the Cs Ion Exchange Treated LAW Collection Vessel continues until its UOL is reached.

If the level is not within the normal operating range, interlocks along with alarms help prevent an overflow condition. At the high alarm set point, an alarm is generated. At the high-high alarm set point, an alarm is generated and all dedicated controlled feeds are isolated. Isolation occurs by a combination of either stopping the motive force, closing valves, or a combination of these actions. Figure 4 shows the interlocks and alarms for the level instrument associated with the Cs Ion Exchange Treated LAW Collection Vessels (CXP-VSL-00026A/B/C).

3.5 CXP-IXC-00001/2/3/4

The Cs IX Columns house the resin used to remove Cs-137 from the LAW stream. At any time, three of the four IX columns will be processing LAW feed to support LAW vitrification, and one IX column will undergo regeneration. In all modes the Cs IX columns operate fully flooded and thus do not have level control. The IX columns do have individual rupture disks to protect the Cs IX columns from over pressure. The rupture disks are instrumented to alarm and interlock feeds in the event a disk rupture. Figure 5 shows the interlocks and alarms for the level instrument associated with the Cs IX Columns (CXP-IXC-00001/2/3/4).

3.6 CXP-BULGE-00004

The Cs IX Process Bulge contains valves to direct effluents from the Cs IX columns to CXP-VSL-00004, the Cs IX Caustic Rinse Collection Vessel, and the PWD and RDP systems, and direct fluids received from RDP-PMP-00011, the Spent Resin Dewatering Container Pump. The bulge provides secondary containment and shielding to protect the worker. The Cs IX Process Bulge is instrumented with a level switch to alarm an operator that a leak in the bulge has occurred. Any spilt fluids are drained to the C5 drain collection header. Figure 6 shows the alarm for the level instrument associated with the Cs IX Process Bulge (CXP-BULGE-00004).

Figure 1. Level Measurement for Cs Ion Exchange Feed Vessel (CXP-VSL-00001)

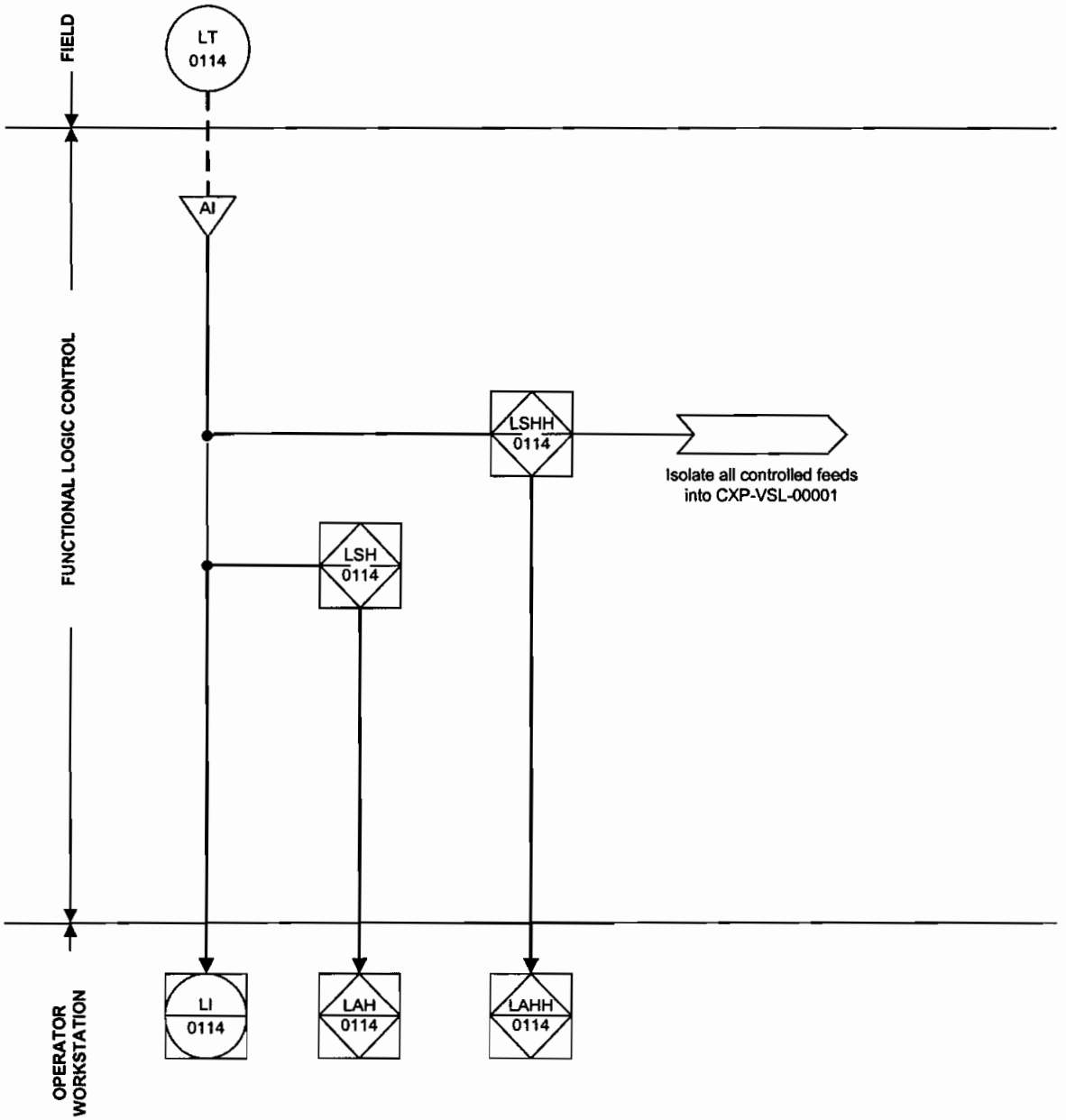

Figure 2. Level Measurement for Cs IX Caustic Rinse Collection Vessel (CXP-VSL-00004)

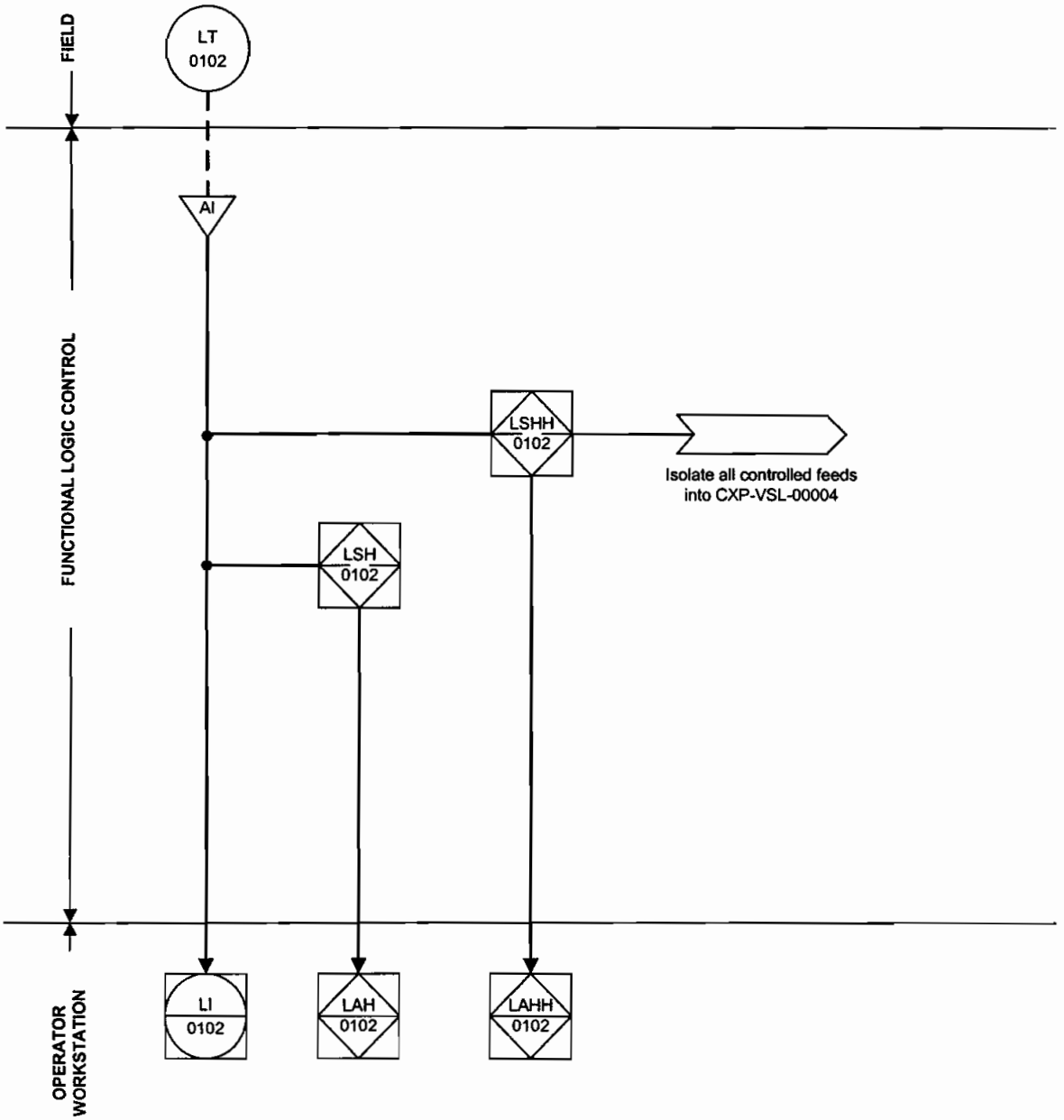

Figure 3. Level Measurement for Cs IX Reagent Vessel (CXP-VSL-00005)

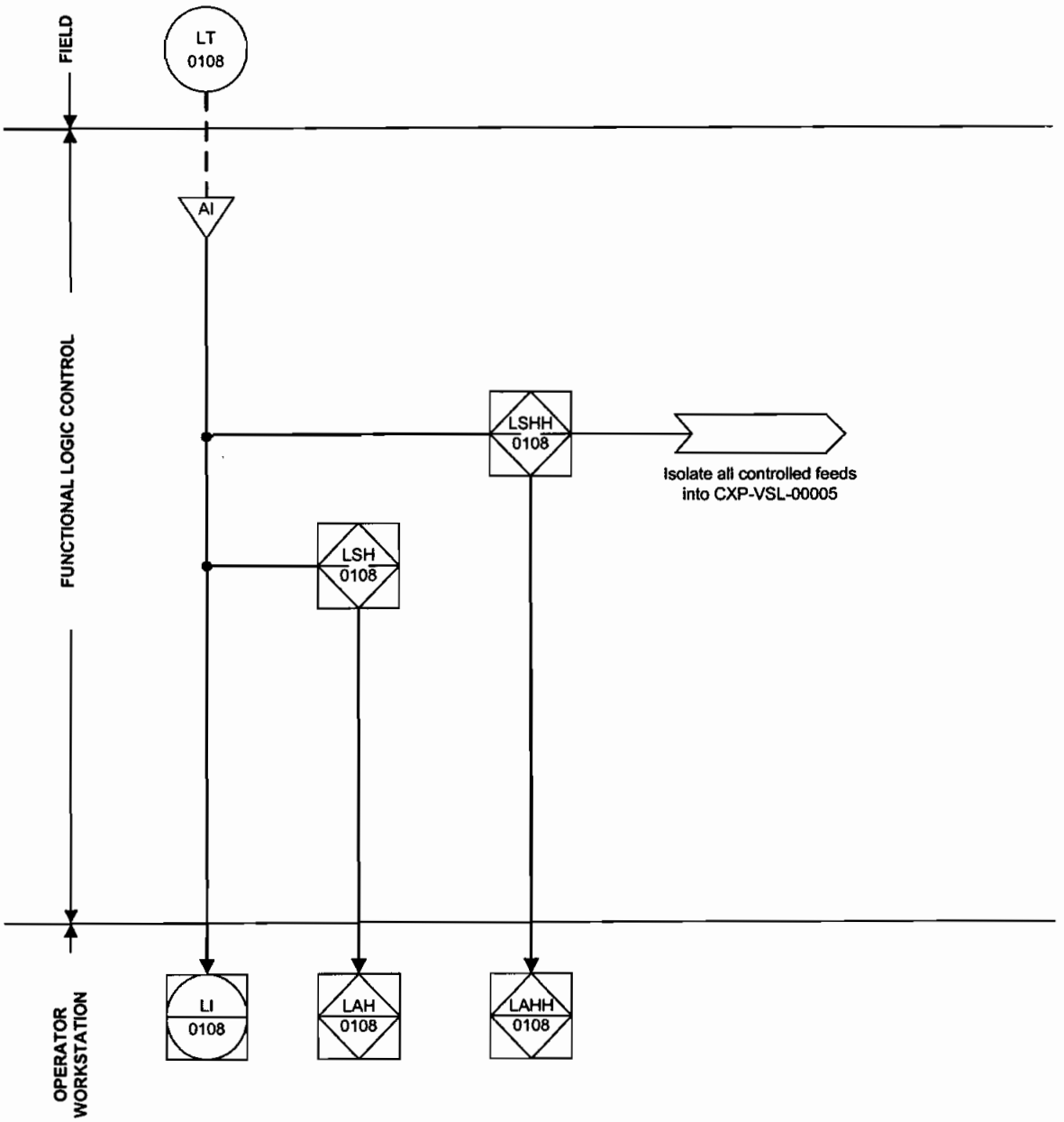

Figure 4. Level Measurement for Cs Ion Exchange Treated LAW Collection Vessel (Typical for CXP-VSL-00026A/B/C)

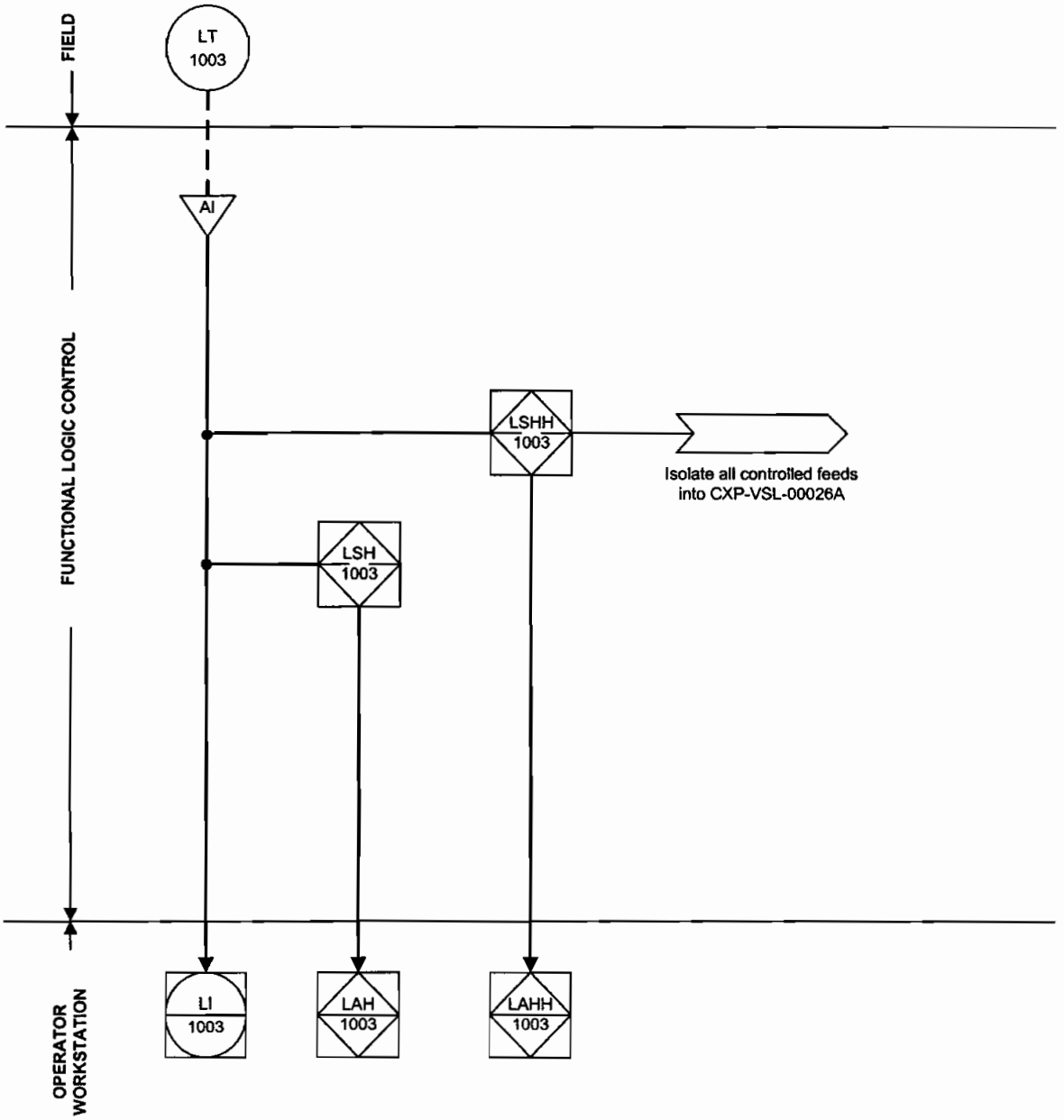

Figure 5. Rupture Disk Indication for Cs IX Columns (Typical CXP-IXC-00001/2/3/4)

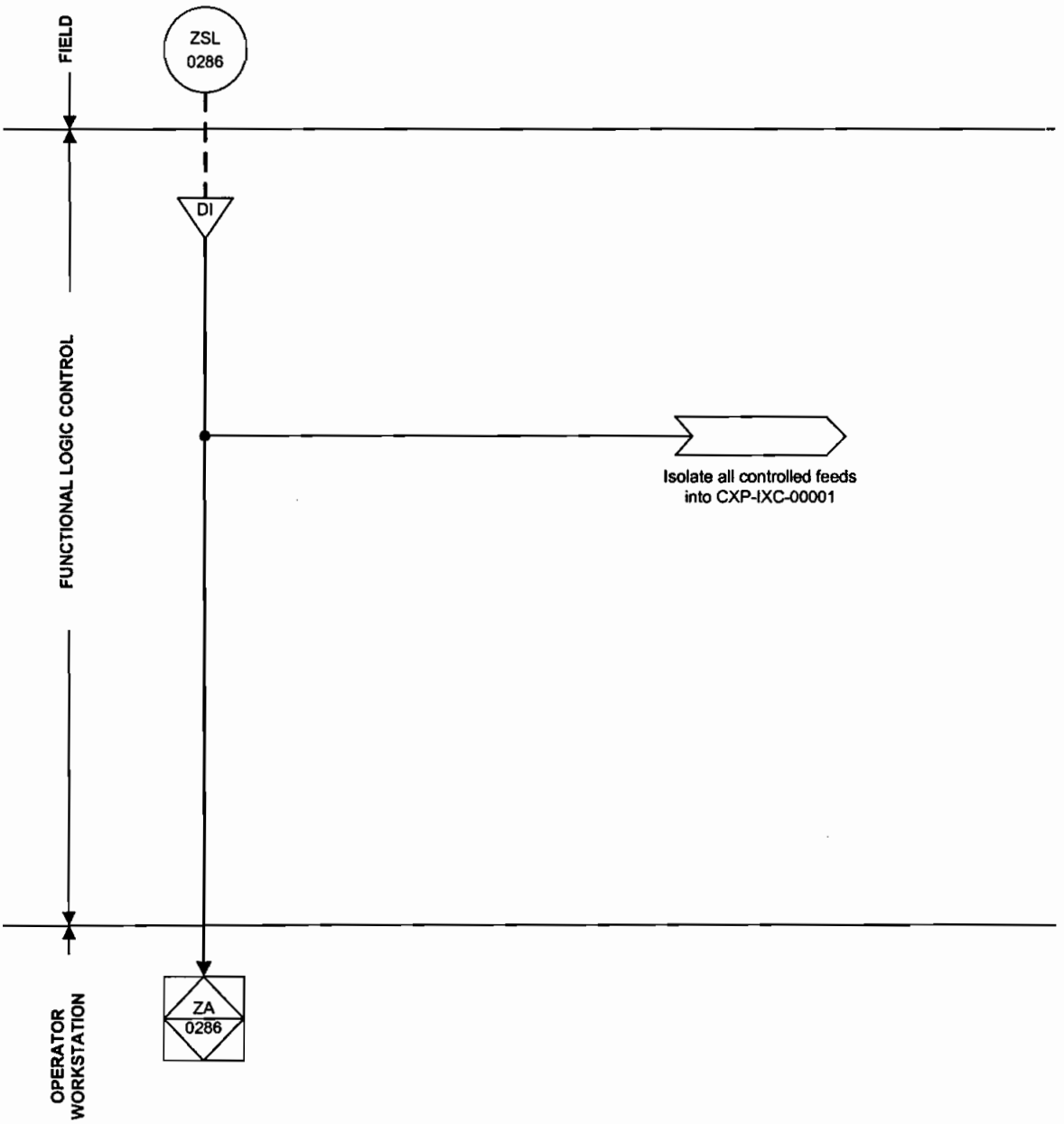

Figure 6. Level Switch for Cs IX Process Bulge (CXP-BULGE-00004)

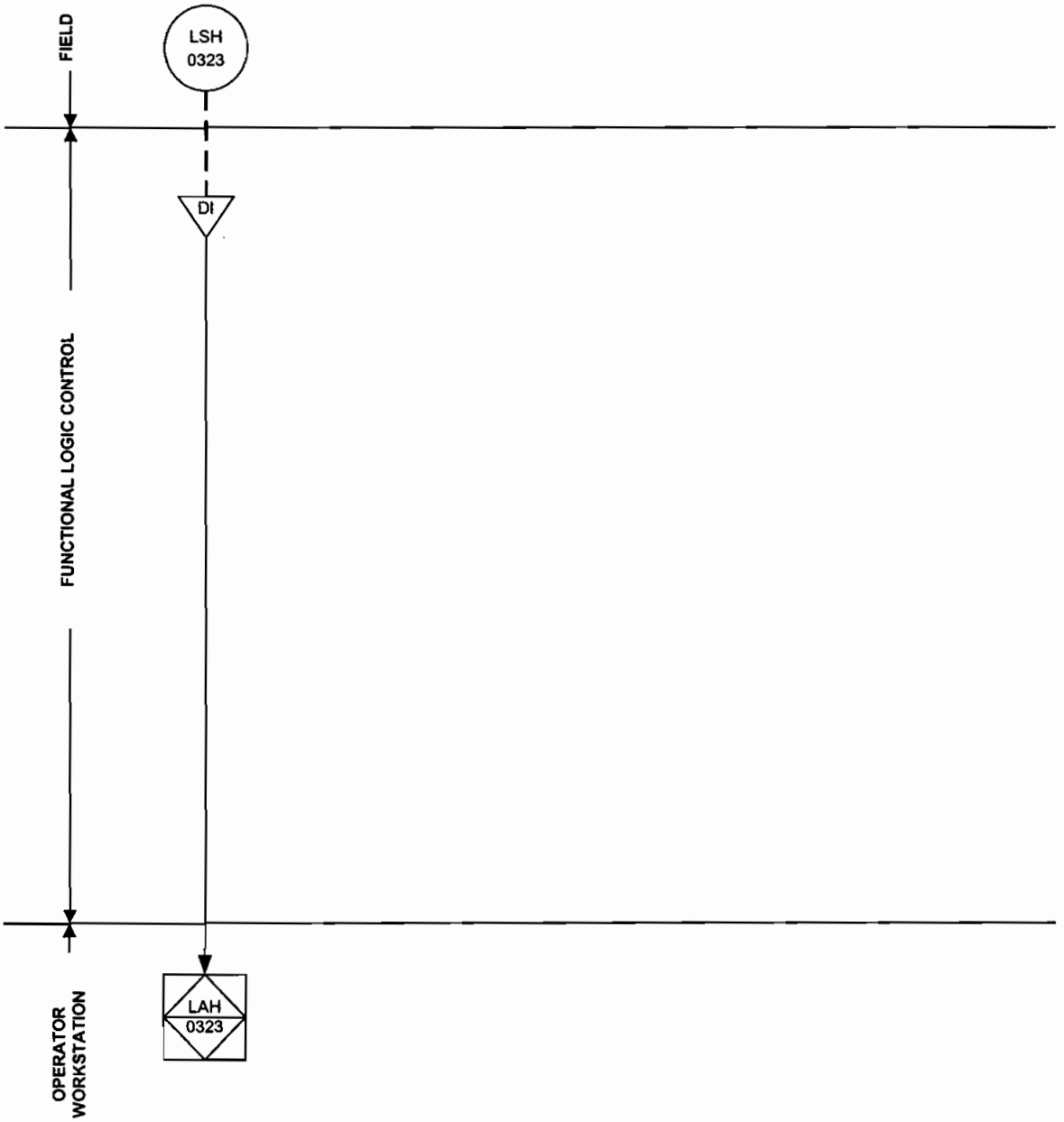

R10135642

DOCUMENT INFORMATION

The following information is required when submitting a document to PDC for issuance.	**Correspondence (CCN) No:** N/A **Document No:** 24590-PTF-PER-J-02-006 **Rev:** 0

Project Information (Check Applicable Box)

☐ Balance of Facilities ☐ HLW Vitrification ☐ Analytical Laboratory ☐ Across all areas

☒ Pretreatment ☐ LAW Vitrification ☐ External Interfaces

Document is applicable to ALARA (as determined by the originator)? ☐ Yes ☒ No

Applicability to ALARA means that the item has the potential to affect doses, contamination levels, or releases to the environment. (See 24590-WTP-GPP-SRAD-002, *Application of ALARA in the Design Process*, sections 4.1 and 4.2 for more information.)

Subject code(s): _____ (for correspondence only)

ACTION ITEM INFORMATION (for correspondence other than meeting minutes)

Commitments: ☐ Yes ☐ No (if yes, brief description below)

_____

_____

Tracked by RITS

Commitment Owed to: _____ Due Date: _____

Actionee(s)			

Tracked by PADC

Written Response Required: ☐ Yes ☐ No

Owed to: _____ Due Date: _____

This correspondence closes action on Correspondence Number _____

☐ Subcontract Files _____ Copies

☐ PAAA Coordinator MS14-4B

☐ Contains SENSITIVE Information

Additional Departmental Info (to facilitate keyword search)

Internal ☐ DNFSB ☐ ORP ☐ OSR ☐ WDOE ☐ WDOH ☐ Other _____

Special Instructions for PDC

10/1/03 10/1/03

☒ Processed Data Entry ☐ Copied QA ☐ Distributed ☐ Filed

ISSUED BY
RPP-WTP PDC
NB 10/1/03
INIT DATE

Document title: **System Logic Description for Pretreatment Facility HLW Lag Storage and Feed Blending Process System**

Contract number: DE-AC27-01RV14136

Department: Controls and Instrumentation

Author(s): M Friedrich

Principal author signature: Mark Friedrich

Document number: 24590-PTF-PER-J-02-006, Rev 0

Checked by: S Smith

Checker signature:

Date of issue: 9/25/03

Issue status: Issued for Permitting Use

Approved by: S Anderson

Approver's position: C&I Engineering Manager

Approver signature: S. E. Anderson

MARK A. FRIEDRICH
STATE OF WASHINGTON
32426
REGISTERED
PROFESSIONAL ENGINEER

Mark A. Friedrich 9-25-03

EXPIRES: 08/31/04

This bound document contains a total of 18 sheets

River Protection Project
Waste Treatment Plant
2435 Stevens Center Place
Richland, WA 99352
United States of America
Tel: 509 371 2000

Notice

Please note that source, special nuclear, and byproduct materials, as defined in the Atomic Energy Act of 1954 (AEA), are regulated at the US Department of Energy (DOE) facilities exclusively by DOE acting pursuant to its AEA authority. DOE asserts that pursuant to the AEA, it has sole and exclusive responsibility and authority to regulate source, special nuclear, and byproduct materials at DOE-owned nuclear facilities. Information contained herein on radionuclides is provided for process description purposes only.

History Sheet

Rev	Date	Reason for revision	Revised by
0	25 September 2003	Issued for Permitting Use	MAF

Contents

Notice ii
History Sheet iii
Acronyms and Abbreviations v
Glossary vi
1 Introduction 1
2 Applicable Documents 1
3 Description 2
3.1 High-Level Waste Feed Receipt Vessel, HLP-VSL-00022 2
3.2 High-Level Waste Lag Storage Vessel, HLP-VSL-00027A 4
3.3 High-Level Waste Lag Storage Vessel, HLP-VSL-00027B 5
3.4 High-Level Waste Feed Blending Vessel, HLP-VSL-00028 6

Figures

Figure 1 Level Measurement for HLW feed receipt vessel (HLP-VSL-00022) 8
Figure 2 Level Measurement for HLW lag storage vessel (HLP-VSL-00027A) 9
Figure 3 Level Measurement for HLW lag storage and feed blending vessel (HLP-VSL-00027B) 10
Figure 4 Level Measurement for HLW feed blending vessel (HLP-VSL-00028) 11

Acronyms and Abbreviations

Reference the piping and instrumentation diagrams (P&IDs) symbols and legend sheets as listed in the Applicable Documents section, for acronyms and abbreviations used in Figures 1 through 4.

DOE	US Department of Energy
FEP	waste feed evaporation process
HLP	HLW lag storage and feed blending process
HLW	high-level waste
LOL	lower operating limit
P&ID	piping and instrumentation diagram
PT	pretreatment
PCS	process control system
Sr/TRU	strontium and transuranic elements
TFC	tank farm contractor
UFP	ultrafiltration process
UOL	upper operating limit
WTP	River Protection Project - Waste Treatment Plant

Glossary

acquire	Acquire is a command under a batch control that reserves a group of equipment for that particular batch control operation.
actual volume	Actual volume is the amount, in US gallons, of waste or process fluid in any vessel.
available space	Available space refers to the volume, in US gallons, of waste or process fluid that any vessel can accommodate and remain below the upper operating limit (UOL). Available space can be calculated as follows: *Available Space = UOL − Actual Volume*
available volume	Available volume refers to the volume, in US gallons, of waste or process fluid that any vessel can transfer to another vessel and remain above the lower operating limit (LOL). Available volume can be calculated as follows: *Available Volume = Actual Volume − LOL*
batch	This refers to material that is being produced or that has been produced by a single execution of a batch process.
batch control	This term refers to control activities and control functions that provide an ordered set of processing activities to complete a batch process.
batch process	A batch process leads to the production of a finite quantity of material by subjecting quantities of input material to an ordered set of processing activities over a finite period of time using one or more pieces of equipment.
control system	This term refers to electronic processors that perform regulatory and logic control functions necessary for normal operation of the plant.
exception handling	This term refers to those functions that deal with plant or process contingencies and other events that occur outside the normal or desired behavior of batch control.
intermediate products	These are treated high-level waste (HLW) products that are staged and blended in the pretreatment (PT) facility prior to immobilization in the HLW vitrification facility. These products include treated solids slurry, strontium and transuranic elements (Sr/TRU) precipitate slurry and cesium concentrate.
LOL	Lower operating limit- a vessel low level set point used to stop a transfer-out batch operation from that vessel under normal plant operations.
permissive	A permissive is an interlock that allows a device to change state or a sequence to start. Once a device has changed state or a sequence has started, a permissive has no further effect on the device or sequence.
release	Release is a command under a batch control that opens up a group of equipment for any batch control to acquire.
requested volume	The requested volume is the volume, in US gallons, of waste or process fluid that can be delivered to the destination vessel and the total volume will remain below the vessel's upper operating level.

Sr/TRU precipitate	For envelope C feed, the strontium and transuranic elements are precipitated out of solution and separated from the supernate along with any entrained solids to produce the slurry.
trip	A trip is an interlock that does not allow a device to change state or a sequence to start. Once a device has changed state or a sequence has started, a trip continues to have an effect on the device or sequence.
UOL	Upper operating limit – A vessel high level setpoint used to stop a transfer-in batch operation to that vessel under normal plant operation.

1 Introduction

This document describes the control logic associated with vessel instrumentation and other ancillary equipment, such as pumps and valves, within the HLW lag storage and feed blending process (HLP) system in the pretreatment (PT) facility that function to prevent inadvertent overflows within this system through the control system.

2 Applicable Documents

24590-WTP-M6-50-P0001, *P&ID Symbols and Legend Sheet 1 of 6.*

24590-WTP-M6-50-P0002, *P&ID Symbols and Legend Sheet 2 of 6.*

24590-WTP-M6-50-P0003, *P&ID Symbols and Legend Sheet 3 of 6.*

24590-WTP-M6-50-P0004, *P&ID Symbols and Legend Sheet 4 of 6.*

24590-WTP-M6-50-P0005, *P&ID Symbols and Legend Sheet 5 of 6.*

24590-WTP-M6-50-P0006, *P&ID Symbols and Legend Sheet 6 of 6.*

24590-PTF-M6-HLP-P0001, *P&ID-PTF HLW Lag Storage and Blending Process Vessel HLP-VSL-00027A/B (Q).*

24590-PTF-M6-HLP-P0002, *P&ID-PTF HLW Feed Receipt Vessel HLP-VSL-00022 (Q).*

24590-PTF-M6-HLP-P0003, *P&ID-PTF HLW Feed Blending Process Vessel HLP-VSL-00028 (Q).*

24590-PTF-M6-HLP-P0005, *P&ID-PTF HLW Lag Storage and Feed Blending Utility Services -PSA Rack (Q).*

24590-PTF-M6-HLP-P0006, *P&ID-PTF HLW Lag Storage and Feed Blending Utility Services -PSA Rack (Q).*

24590-PTF-M6-HLP-P0007, *P&ID-PTF HLW Lag Storage and Feed Blending Utility Services -PSA Rack (Q).*

24590-PTF-M6-HLP-P0009, *P&ID-PTF HLW Lag Storage and Blending Utility Services Plant Wash Rack (Q).*

24590-PTF-M6-HLP-P0010, *P&ID-PTF HLW Lag Storage and Blending Utility Services – Plant Wash Rack (Q).*

24590-PTF-3YD-HLP-00001, System Description for HLW Lag Storage and Feed Blending Process System (HLP).

3 Description

The following sections describe the 4 major vessels that make up the HLP system and the associated instrumentation.

3.1 High-Level Waste Feed Receipt Vessel, HLP-VSL-00022

During normal operations, the HLW feed receipt vessel (HLP-VSL-00022) receives feed from the US Department of Energy (DOE) tank farm. There it is staged, sampled, and then transferred to the ultrafiltration process (UFP) system, the waste feed evaporation process (FEP) system, or the waste feed receipt process (FRP) system for further processing. There is also the capability to return the feed back to DOE tank farm when required; however, this is considered a rare event.

Prior to and during the transfer of feed from the tank farm to HLW feed receipt vessel (HLP-VSL-00022), there is manual data exchange between the River Protection Project - Waste Treatment Plant (WTP) contractor and the tank farm contractor (TFC) to ensure a safe transfer operation and to prevent vessel overflow. This data interface is regulated through administrative controls and hardwired permissive signal exchanges.

Administrative controls take place over the telephone between the WTP contractor and the TFC and are part of the pre-start, and transfer - and post-transfer checks. These controls are as mentioned in ICD 20-Interface Control Document for High –Level Waste Feed.

The pre-start controls are listed as follows and are confirmed prior to commencing the transfer:

Pre-Start Controls	Purpose
Confirm 1 of the 3 transfer lines are selected.	This will allow for proper valve alignment, thereby preventing misrouting of feed to WTP.
Calculate available space in HLW feed receipt vessel (HLP-VSL-00022) and request feed transfer volume based on the available space, in US gallons.	This will prevent overflow and will be used for feed transfer balance calculations.
Confirm space is available in the HLW effluent transfer vessel (PWD-VSL-00043) to receive transfer line post flush drain.	This will prevent solids from settling inside the transfer lines after transfer and will prevent overflow in HLW effluent transfer (PWD-VSL-00043).
Confirm that the level transmitter, temperature transmitter, control valves, flow meters, and other associated instrumentation are functional.	This will ensure that the transfer can be monitored and controlled.
Confirm that the high alarm in black cell or hot cell sumps is not activated.	This will monitor unjacketed transfer lines within PT facility for leaks and avoid overflow of ultimate overflow vessel (PWD-VSL-00033).

The following are the transfer controls that take place once transfer of feed has actually started:

Transfer Controls	Purpose
Confirm receipt (through level change) of pre-transfer warming flush.	This will avoid crystallization of solids in the line and also ensure that the valves are aligned

	properly.
Confirm receipt of feed from level instrumentation in the vessel and from flow indication.	This ensures safe transfer control operation.
Notify TFC to stop transfer when the target volume in receipt tanks is achieved and to begin post-transfer flush drain.	This will prevent overflow of HLW feed receipt vessel (HLP-VSL-00022) and ensure no feed remains in the lines.

The following are the post-transfer controls that take place once transfer of feed has been completed:

Post-Transfer Controls	Purpose
Return all equipment to pre-transfer condition.	This will ensure that the valves are in proper position after transfer.
Calculate volume of flush and actual feed received from the TFC.	This value is used for feed transfer balance calculations.

The following signals are used to generate a single hardwired permissive or trip signal that is transferred to the TFC using signal cables originating at the WTP control system and terminating at the TFC control system. This permissive or trip signal is directly tied to the TFC master pump logic, to allow either a pump to start (permissive) or to stop (trip) a running pump.

Permissive/Trip Signal	Purpose
High-High level alarm in ultimate overflow vessel (PWD-VSL-00033).	This condition will be used as a trip to stop the transfer pump, hence prevent an overflow of ultimate overflow vessel (PWD-VSL-00033); however, there will be a monitored supervisory override to flush lines if needed.
High level alarm in HLW effluent transfer vessel (PWD-VSL-00043).	This condition will be used as a trip to stop the transfer pump to ensure available volume for drain flush after transfer.
All valves are properly aligned in WTP PT facility for transfer from TFC.	This condition will be used as a permissive to allow transfer from TFC to WTP to start, to avoid deadheading of the transfer pump, and to prevent overflow due to a misroute.
High alarm in transfer line leak pot.	This condition is used as a trip to stop the transfer pump, hence avoid environmental contamination and prevent overflow of ultimate overflow vessel (PWD-VSL-00033); however, there will be a monitored supervisory override to flush lines if needed.
Operator enable-disable transfer.	This command will be used as a permissive or trip to allow TFC to start or to stop the pump.
High level alarm in HLW feed receipt vessel (HLP-VSL-00022).	This condition will be used as a trip to stop the transfer pump, hence prevent an overflow of HLW feed receipt vessel (HLP-VSL-00022).

When vessel HLW feed receipt vessel (HLP-VSL-00022) is ready to receive feed from the TFC, the WTP operator will initiate the transfer-in batch control operation. This operation will prompt the WTP operator to enter the transfer volume and the line selected into the control system as parameters for that operation. Once

the parameters are entered by the operator, the batch control will automatically align the valves. The control system will also verify that all instruments, utilities and equipment associated with the transfer are within operational parameters. If any of the parameters are not within the specified limits during the transfer, the control system will switch to an exception handling function. The position feedback switches for these valves are also continually monitored by the batch control and if any of the valves are not in the correct position, the sequence will switch to an exception handling function that initiates pre-determined corrective action.

Each step in the batch operation will be performed automatically with built-in operator prompts as dictated by the pre-start and post-transfer administrative controls mentioned above. The transfer-in sequence will be completed when the required batch has been transferred, post-transfer flushing and draining have been completed, and the transfer volumes between WTP and TFC have been reconciled.

For better control of any transfer operation involving the HLW feed receipt vessel (HLP-VSL-00022), transfers are limited by the batch control operation to one transfer at a time. Once the batch control acquires HLW feed receipt vessel (HLP-VSL-00022), no other batch control operation will be able to acquire the vessel until it is released from the initial operation. The acquire and release commands ensure that this vessel cannot transfer in or out from multiple destinations at the same time.

Once the vessel is filled and sample results obtained, the transfer-out sequence can be initiated. Under normal operating conditions the sequence will be stopped if any of the following occurs:

- The level in vessel HLW feed receipt vessel (HLP-VSL-00022) reaches its lower operating level (LOL).
- The specified volume is transferred.
- The destination vessel reaches its upper operating level (UOL).

During the entire transfer-in or transfer-out sequence, the control system continually monitors the sump alarms within the PT facility and notifies the operator if an alarm condition occurs. The transfer can then be stopped manually at the discretion of the operator.

All of the above will help prevent an overflow condition in vessel HLW feed receipt vessel (HLP-VSL-00022).

As mentioned earlier, there is the capability to return feed from vessel HLW feed receipt vessel (HLP-VSL-00022) back to the DOE tank farm. This transfer is also controlled by a transfer-out batch control operation with built-in pre-start and post-transfer administrative controls and hard-wired data exchanges between the WTP contractor and the TFC. These controls are as mentioned in ICD 20-Interface Control Document for High–Level Waste Feed.

Refer to Figure 1 for level measurement details for the HLW feed receipt vessel (HLP-VSL-00022).

3.2 High-Level Waste Lag Storage Vessel, HLP-VSL-00027A

The HLW lag storage vessel (HLP-VSL-00027A) receives intermediate waste products, such as Sr/TRU precipitate and treated solids from the UFP system, and transfers them to the feed blending vessel(HLP-VSL-00028). There is also the option to transfer to the HLW lag storage vessel (HLP-VSL-00027B). For better control of any transfer operation involving the HLW lag storage vessel (HLP-VSL-00027A), transfers are limited by the batch control operation to one transfer in or out at a time. Once the batch control acquires HLW lag storage vessel (HLP-VSL-00027A), no other batch control operation can acquire the vessel until it has been released from the initial operation. The acquire and release commands ensure that this vessel cannot transfer in or out from multiple destinations at the same time.

When the vessel is available to receive feed, the operator will initiate the transfer-in sequence. Once the sequence is initiated, the control system will verify that all instruments, utilities, and equipment associated with the transfer are within operational parameters. If any of the parameters are not within the specified limits during the transfer, the control system will switch to an exception handling function. Under normal operating conditions the sequence will be stopped if any of the following occurs:

- The level in HLW lag storage vessel (HLP-VSL-00027A) reaches its UOL.
- A specified volume is transferred.
- The source vessel reaches its LOL.

When the level in HLW lag storage vessel (HLP-VSL-00027A) reaches its UOL, the control system will notify the operator through the Plant Control System Interface that HLW lag storage vessel (HLP-VSL-00027A) is ready for sampling and transferring out. Once the transfer-out sequence is initiated, the control system verifies that all instruments, utilities, and equipment associated with the transfer are within operational parameters. If any of the parameters are not within the specified limits during the transfer, the control system will switch to an exception handling function. Under normal operating conditions the sequence will be stopped if any of the following occurs:

- The level in vessel HLW lag storage (HLP-VSL-00027A) reaches its LOL.
- A specified volume is transferred.
- The destination vessel reaches its UOL.

During the entire transfer-in or transfer-out sequence, the control system continually monitors the sump alarms within PT facility and notifies the operator if an alarm condition occurs. The transfer can then be stopped manually at the discretion of the operator. The position switches of the valves are also constantly monitored by the control system. If any of the associated valves are not in the correct position, the batch control will switch to an exception handling logic.

Refer to Figure 2 for level measurement details for the HLW lag storage vessel (HLP-VSL-00027A).

3.3 High-Level Waste Lag Storage Vessel, HLP-VSL-00027B

The HLW lag storage vessel(HLP-VSL-00027B), receives intermediate products, such as Sr/TRU precipitate and treated solids from the UFP system, and transfers them to the feed blend vessel (HLP-VSL-00028). It can also be used as a back-up blend vessel, hence has the ability to receive Cs concentrate from the cesium nitric acid recovery process system. For better control of any transfer operation involving the HLW lag storage vessel (HLP-VSL-00027B), transfers are limited by the batch control operation to one transfer in or out at a time. Once the batch control acquires vessel HLP-VSL-00027B, no other batch control operation is able to acquire the vessel until it is released. The acquire and release commands ensure that this vessel cannot transfer in or out from multiple destinations at the same time.

When the vessel is available to receive feed, the operator will initiate the transfer-in sequence. Once the sequence is initiated, the control system will verify that all instruments, utilities, and equipment associated with the transfer are within operational parameters. If any of the parameters are not within the specified limits during the transfer, the control system will switch to an exception handling function. Under normal operating conditions the sequence will be stopped if any of the following occurs:

- The level in HLW lag storage vessel (HLP-VSL-00027B) reaches its UOL.
- A specified volume is transferred.

- The source vessel reaches its LOL.

When the level in HLW lag storage vessel (HLP-VSL-00027B) reaches the UOL, the control system will notify the operator through the Plant Control System Interface that HLW lag storage vessel (HLP-VSL-00027B) is ready for sampling and transferring out. Once the transfer-out sequence is initiated, the control system verifies that all instruments, utilities, and equipment associated with the transfer are within operational parameters. If any of the parameters are not within the specified limits during the transfer, the control system will switch to an exception handling function. Under normal operating conditions the sequence will be stopped if any of the following occurs:

- The level in HLW lag storage vessel (HLP-VSL-00027B) reaches its LOL.
- A specified volume is transferred.
- The destination vessel reaches its UOL.

During the entire transfer-in or transfer-out sequence, the control system continually monitors the sump alarms within the PT facility and notifies the operator if an alarm condition occurs. The transfer can then be stopped manually at the discretion of the operator. The position switches of valves are also constantly monitored by the control system. If any of the associated valves are in the wrong position, the batch control will switch to an exception handling logic.

Refer to Figure 3 for level measurement details for HLW lag storage and feed blending vessel (HLP-VSL-00027B).

3.4 High-Level Waste Feed Blending Vessel, HLP-VSL-00028

The HLW feed blending vessel (HLP-VSL-00028) receives treated solids and Sr/TRU precipitate from HLW lag storage vessel (HLP-VSL-00027A) or HLW lag storage vessel (HLP-VSL-00027B). It can also receive treated solids and Sr/TRU precipitate directly from the UFP system. It also receives cesium concentrate from the cesium nitric acid recovery process system and concentrated washed solids from the FEP system. After the blending operation, the blended product is transferred to the HLW vitrification facility into vessel HLW concentrate receipt vessel (HCP-VSL-00001) or HLW concentrate receipt vessel (HCP-VSL-00002). The HLW feed blending vessel can also be used as a lag storage vessel. For better control of the transfer operation involving the HLW feed blending vessel (HLP-VSL-00028), transfers are limited by the batch control operation to one transfer in or out at a time. Once the batch control acquires vessel HLW feed blending vessel (HLP-VSL-00028), no other batch control operation can acquire the vessel until it is released. The acquire and release commands ensure that this vessel cannot transfer in or out from multiple destinations at the same time.

When the vessel is available to receive feed, the operator will initiate the transfer-in sequence. Once the sequence is initiated, the control system will verify that all instruments, utilities, and equipment associated with the transfer are within operational parameters. If any of the parameters are not within the specified limits during the transfer, the control system will switch to an exception handling function. Under normal operating conditions the sequence will be stopped if any of the following occurs:

- The level in HLW feed blending vessel (HLP-VSL-00028) reaches its UOL.
- A specified volume is transferred.
- The source vessel reaches its LOL.

When HLW feed blending vessel (HLP-VSL-00028) reaches its UOL, the control system will notify the operator through the Plant Wide Control System Interface that HLW feed blending vessel (HLP-VSL-00028)

is ready for sampling and transferring out. Once the transfer-out sequence is initiated, the control system verifies that all instruments, utilities, and equipment associated with the transfer are within operational parameters. If any of the parameters are not within the specified limits during the transfer, the control system will switch to an exception handling function. Under normal operating conditions the sequence will be stopped if any of the following occurs:

- The level in HLW feed blending vessel (HLP-VSL-00028) reaches its LOL.
- A specified volume is transferred.
- The destination vessel reaches its UOL.

During the entire transfer-in or transfer-out sequence, the control system continually monitors the sump alarms within the PT facility and notifies the operator if an alarm condition occurs. The level in the leak detection pots during transfer out to HLW facility is also constantly monitored for any alarm conditions. The transfer can then be stopped manually at the discretion of the operator. The position switches of valves are also constantly monitored by the control system. If any of the associated valves are in the wrong position, the batch control will switch to an exception handling logic.

Refer to Figure 4 for level measurement details for HLW feed blending vessel (HLP-VSL-00028).

Figure 1 **Level Measurement for HLW feed receipt vessel (HLP-VSL-00022)**

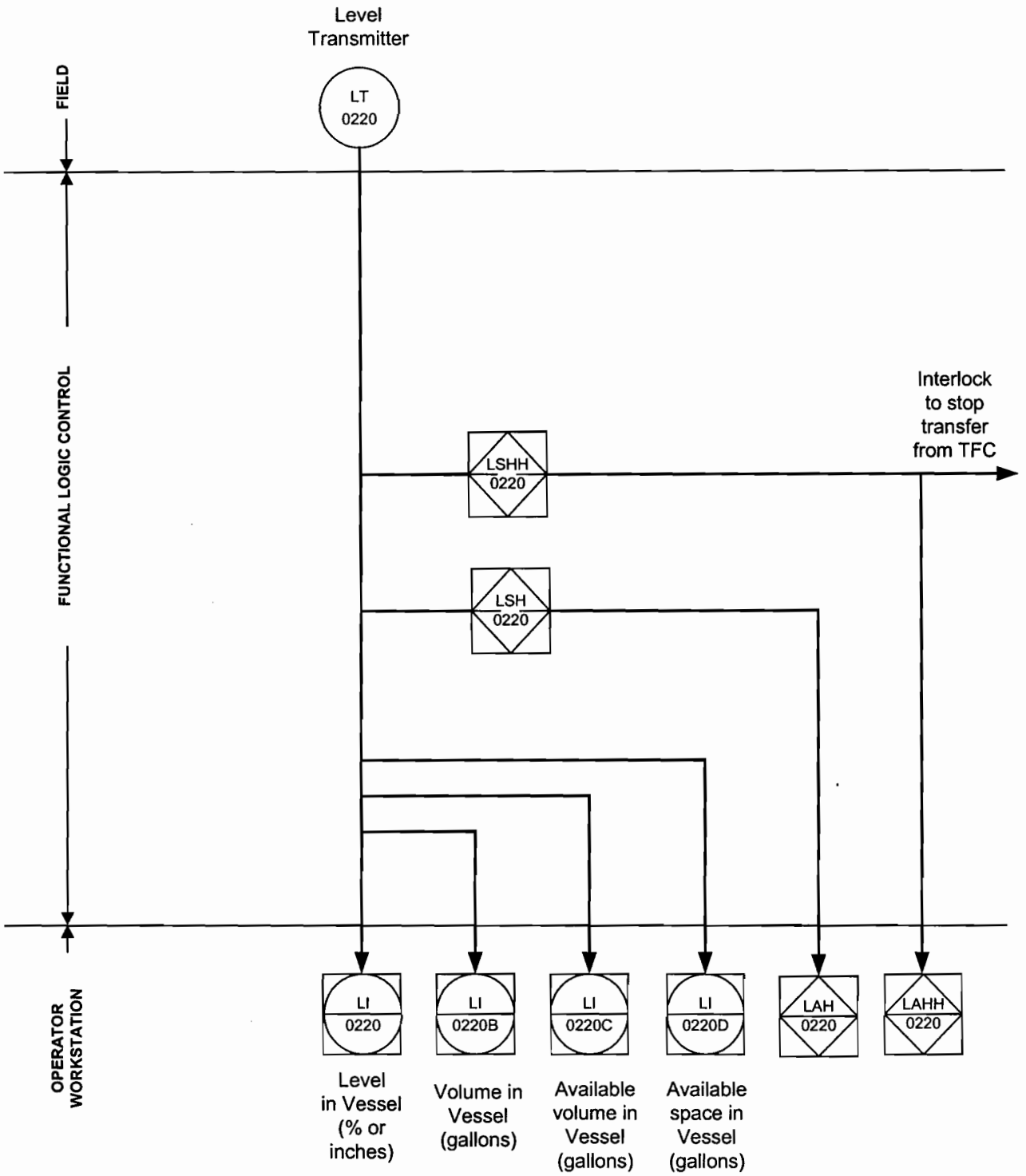

Figure 2 **Level Measurement for HLW lag storage vessel (HLP-VSL-00027A)**

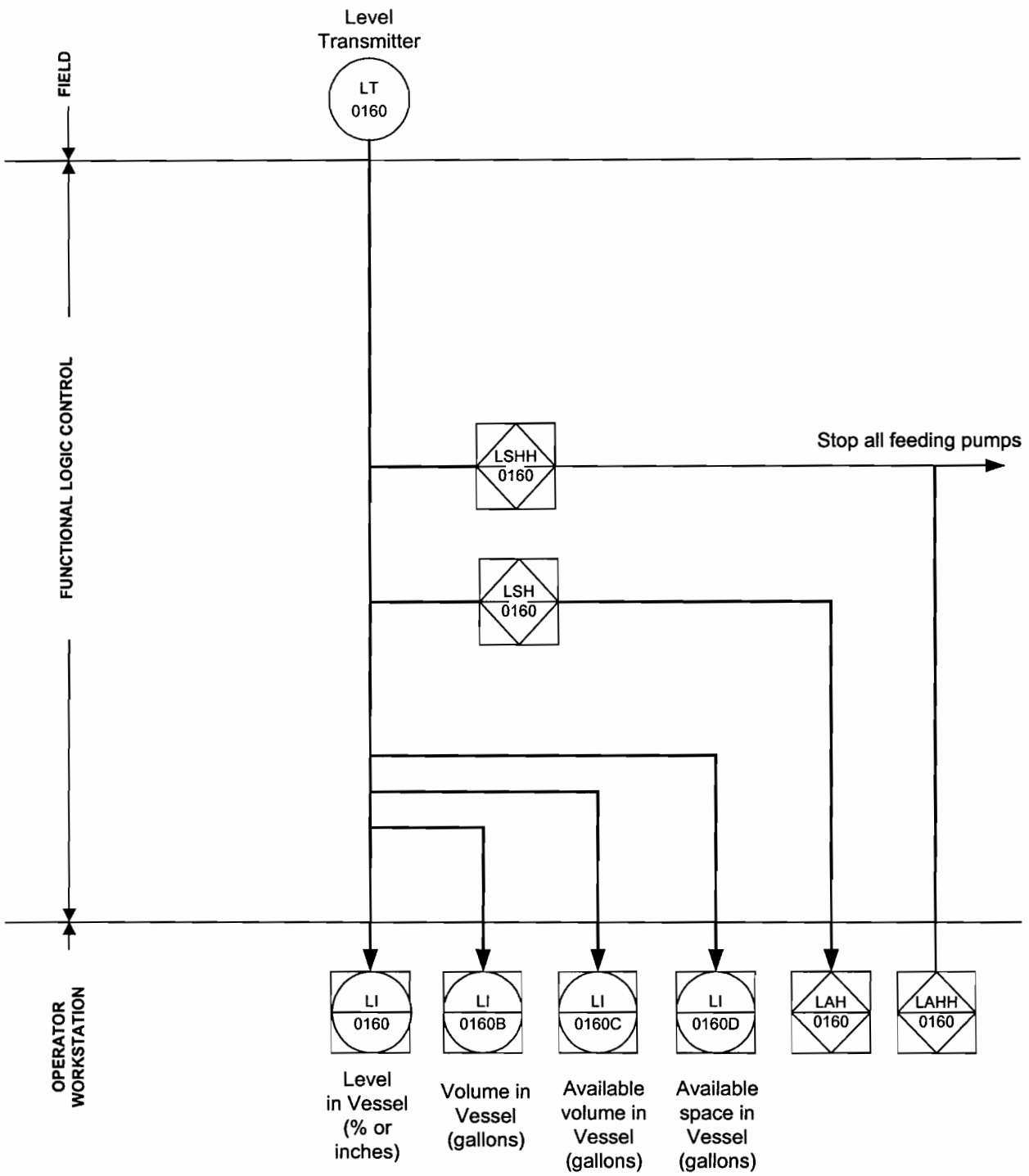

Figure 3 **Level Measurement for HLW lag storage and feed blending vessel (HLP-VSL-00027B)**

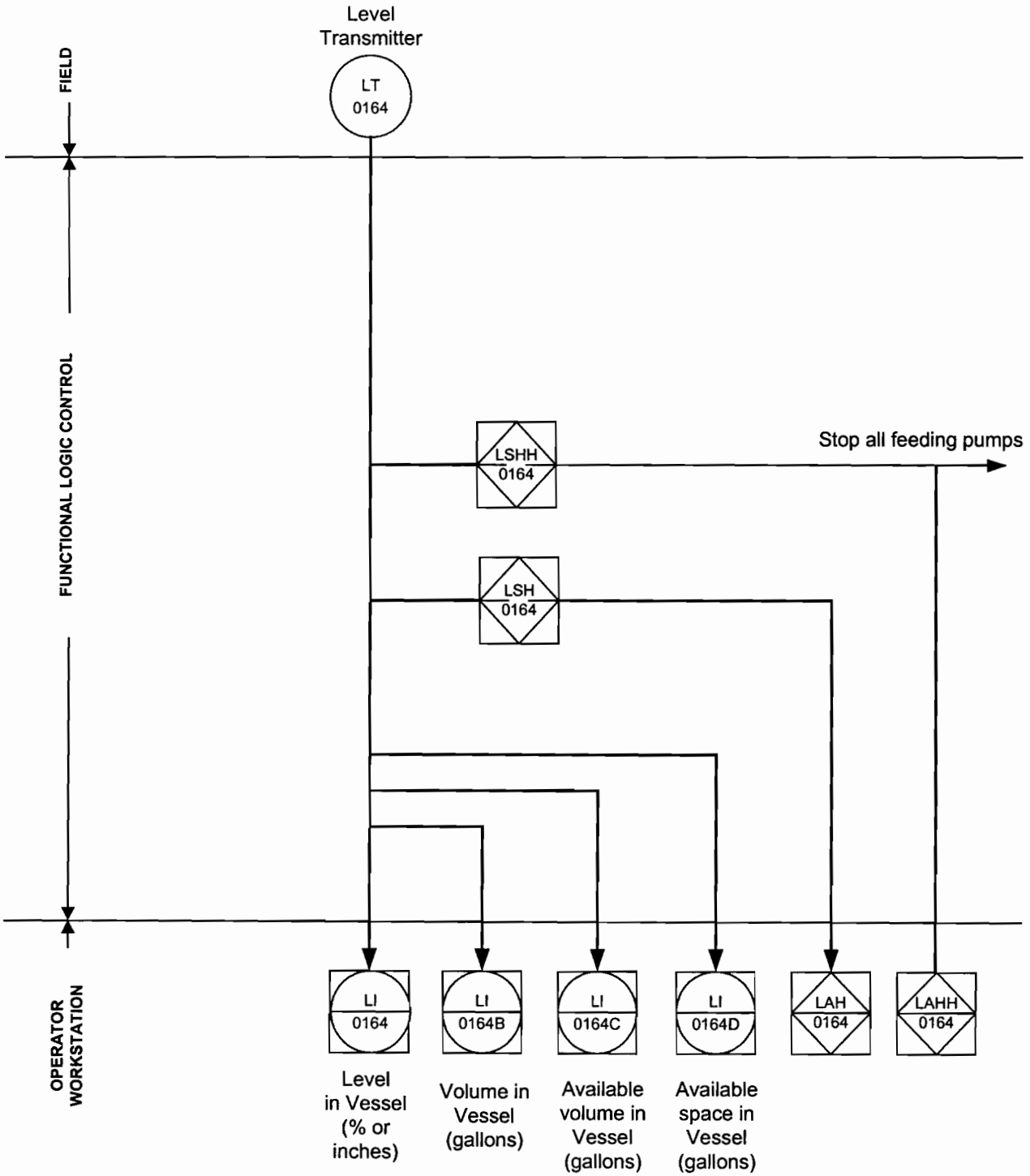

Figure 4 **Level Measurement for HLW feed blending vessel (HLP-VSL-00028)**

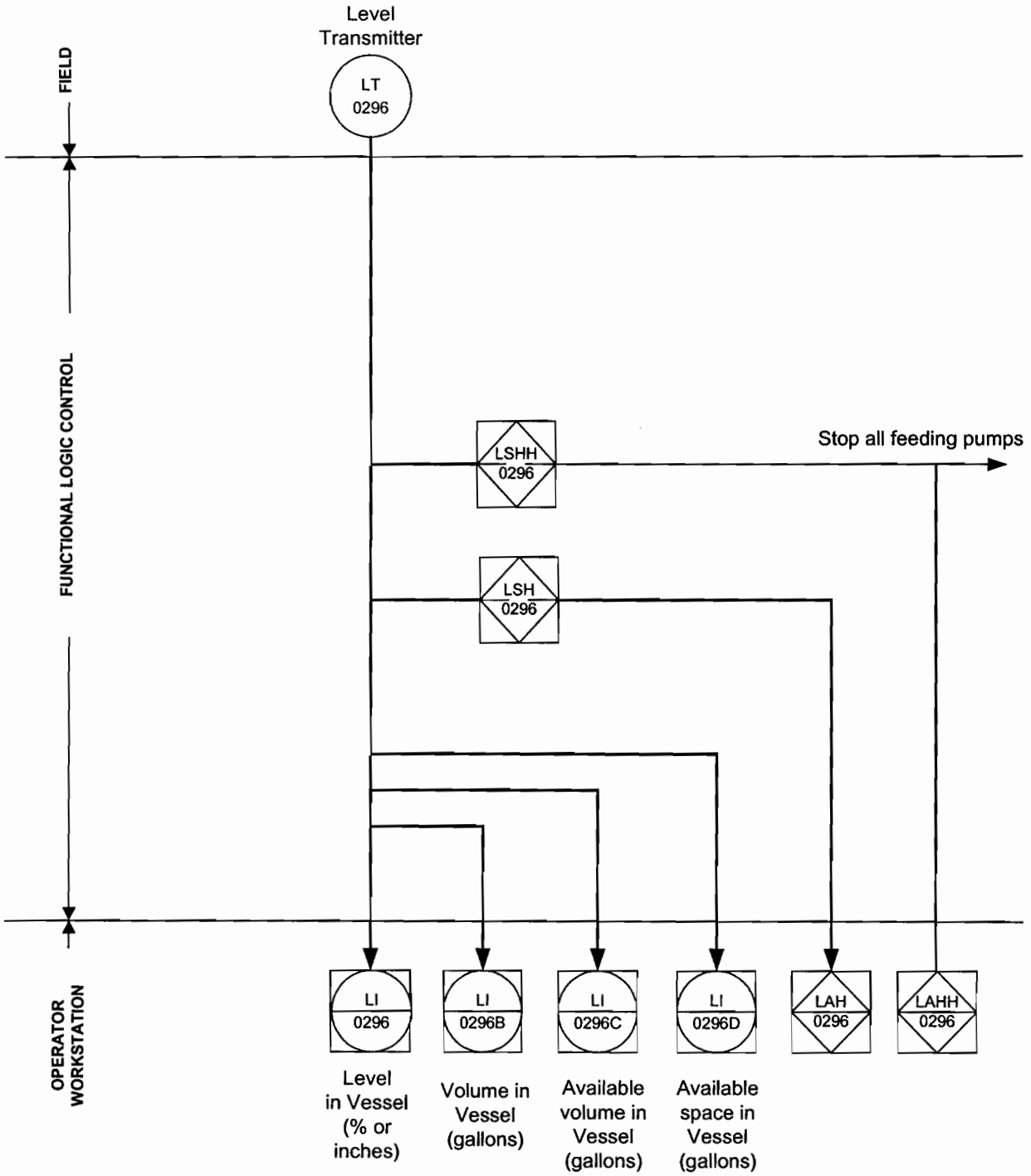

R10328034

Document title: **System Logic Description for Pretreatment Facility Cs Nitric Acid Recovery Process (CNP) System**

Contract number: DE-AC27-01RV14136

Department: Controls and Instrumentation

Author(s): Mark Woodworth Mark A. Friedrich

ISSUED BY RPL-WTP PDC 6/28/04 INIT DATE

Principal author signature:

Document number: 24590-PTF-PER-J-02-007, Rev 0

Checked by: Paul Schmitz

Checker signature: Paul Schmitz

Date of issue: 6/28/04

Issue status: Issued for Permitting Use

Approved by: Steve E. Anderson

Approver's position: C&I Engineering Manager

Approver signature: S. E. Anderson

MARK A. FRIEDRICH STATE OF WASHINGTON 32426 REGISTERED PROFESSIONAL ENGINEER

Mark A. Friedrich 6-28-04

EXPIRES: 08/31/04

This bound document contains a total of 17 sheets

River Protection Project
Waste Treatment Plant
2435 Stevens Center Place
Richland, WA 99352
United States of America
Tel: 509 371 2000

Notice

Please note that source, special nuclear, and byproduct materials, as defined in the Atomic Energy Act of 1954 (AEA), are regulated at the US Department of Energy (DOE) facilities exclusively by DOE acting pursuant to its AEA authority. DOE asserts that, pursuant to the AEA, it has sole and exclusive responsibility and authority to regulate source, special nuclear, and byproduct materials at DOE-owned nuclear facilities. Information contained herein on radionuclides is provided for process description purposes only.

History Sheet

Rev	Date	Reason for revision	Revised by
0	March 25, 2004	Issued for Permitting Use	MGW

Contents

Notice ii
History Sheet iii
Acronyms and Abbreviations v
Glossary vi
1 Introduction 1
2 Applicable Documents 1
3 Description 1
3.1 CNP-VSL-00001 2
3.2 CNP-VSL-00003 3
3.3 CNP-VSL-00004 3
3.4 CNP-EVAP-00001 4
3.5 CNP-HX-00002 5
3.6 CXP-BULGE-00008 5

Figures

Figure 1. Level Measurement for Cs Evaporator Eluate Lute Pot (CNP-VSL-00001) 6
Figure 2. Level Measurement for Eluate Contingency Storage Vessel (CNP-VSL-00003) 7
Figure 3. Level Measurement for Cs Evaporator Recovered Nitric Acid Vessel (CNP-VSL-00004) 8
Figure 4. Level Measurement for Cs Evaporator Separator Vessel (CNP-EVAP-00001) 9
Figure 5. Level Measurement for Cs Evaporator Primary Condenser (CNP-HX-00002) 10
Figure 6. Level Switch for Instrument Bulge (CNP-BULGE-00008) 11

Acronyms and Abbreviations

AI	Analog input
CNP	Cesium Nitric Acid Recovery Process System
CXP	Cesium Ion Exchange Process System
HLP	HLW Lag Storage and Feed Blending Process System
IX	Ion exchange
LAH	Level alarm high
LAHH	Level alarm high-high
LI	Level indication
LOL	Lower operating limit
LP	Low pressure
LSH	Level switch high
LSHH	Level switch high-high
LT	Level transmitter
P&ID	Piping and instrumentation diagram
PT	Pretreatment
PWD	Plant Wash & Disposal
UOL	Upper operating limit
WTP	River Protection Project - Waste Treatment Plant

Glossary

acquire	Acquire is a command under a batch control that reserves a group of equipment for that particular batch control operation.
batch	The material that is being produced or that has been produced by a single execution of a batch process.
batch control	This term refers to control activities and control functions that provide an ordered set of processing activities to complete a batch process.
batch process	The production of a finite quantity of material by subjecting quantities of input material to an ordered set of processing activities over a finite period of time using one or more pieces of equipment.
control system	Electronic Processors that perform regulatory and logic control functions necessary for plant normal operation.
exception handling	Those functions that deal with plant or process contingencies and other Logic events, which occur outside the normal or desired behavior of batch control.
interlock	This term refers to a mechanism that automatically brings about or prevents the operation of another mechanism.
lower operating limit	A vessel low-level set point used to stop a transfer-out batch operation from the vessel under normal plant operations.
permissive	Interlock which allows a device to change state or a sequence to start. Once a device has changed state or a sequence started, a permissive has no further effect on the device or sequence.
release	A command under a batch control, that opens up a group of equipment for any batch control to acquire.
trip	A trip is a conditional interlock that forces a device or a sequence to a defined state. A trip continues to have an effect on the device or sequence until the interlock condition no longer exist.
upper operating limit	A vessel high-level set point used to stop a transfer-in batch operation to the vessel under normal plant operation.

1 Introduction

This document describes the instrument control logic for tank and ancillary equipment for the Cs Nitric Acid Recovery Process System (CNP) within the pretreatment (PT) facility that are associated with dangerous waste management.

2 Applicable Documents

24590-WTP-M6-50-P0001, *P&ID Symbols and Legend Sheet 1 of 6*

24590-WTP-M6-50-P0002, *P&ID Symbols and Legend Sheet 2 of 6*

24590-WTP-M6-50-P0003, *P&ID Symbols and Legend Sheet 3 of 6*

24590-WTP-M6-50-P0004, *P&ID Symbols and Legend Sheet 4 of 6*

24590-WTP-M6-50-P0005, *P&ID Symbols and Legend Sheet 5 of 6*

24590-WTP-M6-50-P0006, *P&ID Symbols and Legend Sheet 6 of 6*

24590-PTF-M6-CNP-P0001, *P&ID - PTF Cesium Nitric Acid Recovery Process System Eluate Contingency Storage Vessel*

24590-PTF-M6-CNP-P0002, *P&ID - PTF Cesium Nitric Acid Recovery Process System Recovered Nitric Acid Vessel*

24590-PTF-M6-CNP-P0003, *P&ID - PTF Cesium Nitric Acid Recovery Utility Services - PSA Rack*

24590-PTF-M6-CNP-P0004, *P&ID - PTF Cesium Nitric Acid Recovery Utility Services - PSA Rack*

24590-PTF-M6-CNP-P0005, *P&ID - PTF Cesium Nitric Acid Recovery Utility Services - Plant Wash Rack*

24590-PTF-M6-CNP-P0008, *P&ID - PTF Cesium Nitric Acid Recovery Process System, Evaporator Vessel*

24590-PTF-M6-CNP-P0010, *P&ID - PTF Cesium Nitric Acid Recovery Process System Rectifier and Condensers*

3 Description

The following plant items and ancillary equipment are associated with dangerous waste management within the CNP system, which resides in the PT facility.

- Cs Evaporator Eluate Lute Pot (CNP-VSL-00001)
- Eluate Contingency Storage Vessel (CNP-VSL-00003)
- Cs Evaporator Recovered Nitric Acid Vessel (CNP-VSL-00004)
- Cs Evaporator Separator Vessel (CNP-EVAP-00001)
- Cs Evaporator Primary Condenser (CNP-HX-00002)
- Cs Evaporator Inter-Condenser (CNP-HX-00003)
- Cs Evaporator After Condenser (CNP-HX-00004)
- Cs Evaporator Concentrate Reboiler (CNP-HX-00001)
- Cs Evaporator Nitric Acid Rectifier (CNP-DISTC-00001)
- Instrument Bulge (CNP-BULGE-00008)

The Cs Evaporator Inter-Condenser (CNP-HX-00003) and Cs Evaporator After Condenser (CNP-HX-00004) are hydraulically linked with the Cs Evaporator Primary Condenser (CNP-HX-00002) and condensate levels are controlled via the level control in the CXP-HX-00002 condenser boot. The level control for the condenser boot is described in section 3.5 and controls the condensates level in both CNP-HX-00003 and CNP-HX-00004 due to the hydraulic link.

The Cs Evaporator Nitric Acid Rectifier (CNP-DISTC-00001) and the Cs Evaporator Concentrate Reboiler (CNP-HX-00001) do not have level control associated with them. CNP-DISTC-00001 does not contain a normal liquid inventory, recovered 0.5M nitric acid drains directly to the Cs Evaporator Recovered Nitric Acid Vessel (CNP-VSL-00004). CNP-HX-00001 is a reboiler through which the Cs concentrate is circulated on the tube side and low-pressure steam is condensed on the shell side and drained back to the process condensate system.

3.1 CNP-VSL-00001

The Cs Evaporator Eluate Lute Pot (CNP-VSL-00001) in conjunction with the Cs Evaporator Breakpot (CNP-BRKPT-00002) and ancillary equipment provides a path for fluids into the Cs Evaporator Separator Vessel (CNP-EVAP-00001) and maintains a vacuum seal for the Cs Evaporator Separator Vessel. CNP-VSL-00001 transfers the following feeds to the Cs Evaporator Separator Vessel:

- 5M to 8M nitric acid used to charge the Cs Evaporator Separator Vessel
- Process condensate
- Cs eluate
- Recycled concentrate if required.

The Cs Evaporator Eluate Lute Pot operates as a fully flooded vessel and is connected to both the Cs Evaporator Breakpot and Cs Evaporator Separator Vessel; both located a barometric head above the Cs Evaporator Eluate Lute Pot. The barometric head (33.9 ft of water) provides a vacuum seal between the Cs Evaporator Separator Vessel and the Cs Evaporator Breakpot, which operate at approximately 1.45 psia and 14.5 psia respectively. Since the Cs Evaporator Eluate Lute Pot is a fully flooded vessel, the reference leg of the level instrument is located in CNP-BRKPT-00002 while the density and level legs are located in CNP-VSL-00001. This allows the height of liquid in the piping between CNP-BRKPT-00002 and CNP-VSL-00001 to be monitored and protect against overflow of CNP-BRKPT-00002

For greater waste management reliability, batch controlled transfers to the Cs Evaporator Eluate Lute Pot are limited by the control system to one transfer in or out at a time by the batch control mechanism of acquiring and releasing and basic interlocks.

The Cs Evaporator Eluate Lute Pot will be acquired to make a transfer when the Cs Evaporator Separator Vessel (CNP-EVAP-00001) requires a transfer of nitric acid or process condensate; the CXP system transfers eluate to the Cs Evaporator Separator Vessel; or the Eluate Contingency Storage Vessel transfers eluate or Cs Concentrate to the Cs Evaporator Separator Vessel. Once the sequence is initiated, the control system will verify that instruments, utilities, and equipment associated with the transfer are within operational parameters. If any of the monitored parameters are not within the specified limits during the transfer, the control system will switch to exception handling logic. The transfer is stopped by the control system when any of the following are true for a respective transfer:

- Level in the Cs Evaporator Separator Vessel (CNP-EVAP-00001) reaches its operating set point, for transfers of nitric acid or process condensate to Cs Evaporator Separator Vessel
- Level of the Eluate Contingency Storage Vessel reaches its lower operating limit (LOL), when transferring eluate from the Eluate Contingency Storage Vessel (CNP-VSL-0003).

- CXP system has sent its target volume of eluate to the CNP system.

Once one of the above conditions is met the Cs Evaporator Eluate Lute Pot is released.

If the level is not within the normal operating range, interlocks along with alarms help prevent an overflow condition. At the high alarm set point, an alarm is generated. At the high-high alarm set point, an alarm is generated and all dedicated controlled feeds are isolated. Isolation occurs by a combination of either stopping the motive force, closing valves, or a combination of these actions. Figure 1, shows the typical interlocks and alarms for the level instruments associated with the Cs Evaporator Eluate Lute Pot.

3.2 CNP-VSL-00003

The Eluate Contingency Storage Vessel (CNP-VSL-00003) receives transfers of eluate from the CXP system, transfers of Cs Concentrate from the Cs Evaporator Separator Vessel (CNP-EVAP-00001), and transfer of off-specification recovered eluant from the Cs Evaporator Recovered Nitric Acid Vessel (CNP-VSL-00004). The vessel transfers Cs Concentrate to the HLP system (HLP-VSL-00027B or HLP-VSL-00028) and transfers Cs Concentrate or Cs Eluate to the Cs Evaporator Separator Vessel (CNP-EVAP-00001).

The Eluate Contingency Storage Vessel will receive transfers of Cs Concentrate from the Cs evaporator if the HLP system is unavailable to receive a batch of Cs concentrate at the end of an evaporation cycle. The Eluate Contingency Storage Vessel will also receive batch transfers of eluate during emergency elution and if the Cs evaporator is unavailable to receive eluate from the Cs ion exchange columns. The Eluate Contingency Storage Vessel is acquired by the source vessel and receives each transfer as a batch. Once the transfer sequence is initiated, the control system will verify that instruments, utilities, and equipment associated with the transfer are within operational parameters. If any of the monitored parameters are not within the specified limits during the transfer, the control system will switch to exception handling logic. The transfer is stopped by the control system when any of the following are true for a respective transfer:

- Level in the eluate contingency storage vessel reaches its UOL.
- Target volume of eluate has been transferred from the CXP system to complete elution of an IX column.
- Temperature in Cs Concentrate Breakpot (CNP-BRKPT-00001) reaches its set point and stops the ejector transfer from the Cs Evaporator Separator Vessel to the eluate contingency storage vessel.

If the level is not within the normal operating range, interlocks along with alarms help prevent an overflow condition. At the high alarm set point, an alarm is generated. At the high-high alarm set point, an alarm is generated and all dedicated controlled feeds are isolated. Isolation occurs by a combination of either stopping the motive force, closing valves, or a combination of these actions. Figure 2 shows the interlocks and alarms for the level instrument associated with the Eluate Contingency Storage Vessel (CNP-VSL-00003).

3.3 CNP-VSL-00004

The Cs Evaporator Recovered Nitric Acid Vessel (CNP-VSL-00004) stores recovered eluant for the elution of the CXP IX columns (CXP-IXC-00001/2/3/4). Eluant is fed from the Cs Evaporator Recovered Nitric Acid Vessel to the IX columns as required by the CXP system. The eluate from the columns is returned to the CNP system and concentrated in the evaporator, and 0.5M acid is recovered to be reused as eluant and sent to CNP-VSL-00004. Since the evaporator system recovers eluant at the same time and rate as recovered eluant is sent to the CXP system, the volume in CNP-VSL-00004 fluctuates during operations near its upper operating level. CNP-VSL-00004 receives 2M nitric acid and process condensate transfers to adjust the concentration of the recovered eluant in CNP-VSL-00004 or to make fresh batches of 0.5M nitric acid as required.

When the CXP system requires eluant for elution, CNP-VSL-00004 sends eluant to the CXP system. The eluate is sent back to the CNP system and the eluant recovered is stored in CNP-VSL-00004. This sequence runs until the elution of the IX column is complete, when the transfer of eluant to the CXP system is stopped, the Cs evaporator recovered nitric acid vessel continues to receive recovered eluant from the evaporator until the post elution rinse is complete, bringing the level in CNP-VSL-0004 back to its starting set point. Basic control functions control the level during this sequence, as no operating set points are associated with CNP-VSL-00004, all set points are based on transfer volumes to and from the CXP system.

The contents in the Cs Evaporator Recovered Nitric Acid Vessel (CNP-VSL-00004) are sampled periodically to monitor concentrations of certain ions in solutions. If the results of the sample require adjustments to the concentration of the recovered eluant or a new batch of eluant, 2M nitric acid and process condensate can be added. The operator will determine the volumes required and run the addition sequences. Once the sequence is initiated, the control system will verify that instruments, utilities, and equipment associated with the transfer are within operational parameters. If any of the monitored parameters are not within the specified limits during the transfer, the control system will switch to exception handling logic. The transfer is stopped by the control system when any of the following are true for a respective transfer:

- The level in the Cs evaporator recovered nitric acid vessel (CNP-VSL-00004) reaches its UOL.
- The target volume of 2M nitric acid or process condensate has been transferred to Cs evaporator recovered nitric acid vessel

If the level is no longer within the normal operating range due to an abnormality, interlocks along with alarms help prevent an overflow condition. At the high alarm set point, an alarm is generated. At the high-high alarm set point, an alarm is generated and all dedicated controlled feeds are isolated. Isolation occurs by a combination of either stopping the motive force, closing valves, or a combination of these actions. Figure 3 shows the interlocks and alarms for the level instrument associated with the Cs evaporator recovered nitric acid vessel (CNP-VSL-00004).

3.4 CNP-EVAP-00001

Under normal operations the Cs Evaporator Separator Vessel (CNP-EVAP-00001) receives transfers of eluate from the CXP system, concentrates the eluate, and recovers eluant for reuse in elution of the column. Once the concentrate reaches the endpoint concentration (approximately 2.6M $NaNO_3$) the evaporator is shut down and emptied to the HLP system (HLP-VSL-00027B or HLP-VSL-00028) or to CNP-VSL-00003.

The Cs evaporator separator vessel is initially charged with 5 to 8 molar nitric acid (received from CNP-VSL-00001). The operator initiates a fill sequence that adds acid to CNP-EVAP-00001 until the level set point is reached and the sequence is complete. The transfer is stopped by the control system when the Cs Evaporator Separator Vessel level set point is reached.

Once the Cs evaporator system is running and available for evaporation, eluate is transferred from the CXP system or CNP-VSL-00003 to the Cs Evaporator Separator Vessel (CNP-EVAP-00001). The eluate is transferred to the Cs evaporator separator vessel at a rate of 6 to 10 gpm. Level control modulates the LP steam valve to evaporate the eluate at the same rate that it enters CNP-EVAP-00001 controlling the level in the separator to its set point. The transfer is stopped by the control system when any of the following are true:

- Level in the eluate contingency storage vessel reaches its LOL (for transfers from CNP-VSL-00003).
- Target volume of eluate has been transferred from the CXP system to complete elution and post elution rinse of an IX column.

When the evaporator is not receiving eluate feed it will be refluxed. If the level in the Cs evaporator separator vessel drops, the operator may initiate a sequence to add process condensate to CNP-EVAP-00001 to return the level to its set point. Once the sequence is initiated, the control system will verify that instruments, utilities, and equipment associated with the transfer are within operational parameters. If any of the monitored parameters are not within the specified limits during the transfer, the control system will switch to exception handling logic. The transfer is stopped by the control system when the Cs Evaporator separator vessel level set point is reached.

The Cs Evaporator Separator Vessel may also receive a charge of Cs concentrate from the Eluate Contingency Storage Vessel if it is required to be recycled or further concentrated. A steam ejector transfers the batch to the Cs evaporator separator vessel. The transfer is stopped by the control system when one of the following is true:

- Level in the Cs evaporator separator vessel reaches its UOL.
- Temperature in Cs Evaporator Breakpot (CNP-BRKPT-00002) reaches its set point and stops the ejector transfer from the eluate contingency storage vessel to the Cs Evaporator Separator Vessel (CNP-EVAP-00001).

If the level is not within the normal operating range, interlocks along with alarms help prevent an overflow condition. At the high alarm set point, an alarm is generated. At the high-high alarm set point, an alarm is generated and all dedicated controlled feeds are isolated. Isolation occurs by a combination of either stopping the motive force, closing valves, or a combination of these actions. Figure 4 shows the interlocks and alarms for the level instrument associated with the Cs evaporator separator vessel (CNP-EVAP-00001).

3.5 CNP-HX-00002

The Cs Evaporator Primary Condenser (CNP-HX-00002) receives overhead vapors from the Cs Evaporator Rectifier (CNP-DISTC-00001) and condenses the vapor and returns most of the condensate to the Cs Evaporator Rectifier as reflux while discharging excess condensate to the PWD system. An inventory of condensate is maintained in the condenser boot and the reflux rate is controlled via a flow control valve on the discharge of the condensate pump that returns reflux to the rectifier. The liquid level is maintained by modulating a valve that purges excess condensate to the PWD system.

If the level is not within the normal operating range, interlocks along with alarms help prevent an overflow condition. At the high alarm set point, an alarm is generated. At the high-high alarm set point, an alarm is generated and all dedicated controlled feeds are isolated. Isolation occurs by a combination of either stopping the motive force, closing valves, or a combination of these actions. Figure 5 shows the interlocks and alarms for the level instrument associated with the Cs evaporator primary condenser (CNP-HX-00002).

3.6 CXP-BULGE-00008

The Instrument Bulge contains valves to direct recovered eluant from the Cs Evaporator Nitric Acid Rectifier to CNP-VSL-00004 or to the Cs Evaporator Separator Vessel. The bulge provides secondary containment and shielding to protect the worker. The Cs IX Process Bulge is instrumented with a level switch to alarm an operator that a leak in the bulge has occurred. Any spilled fluids are drained to the C5 drain collection header. Figure 6 shows the alarm for the level instrument associated with the Instrument Bulge (CNP-BULGE-00008).

Figure 1. Level Measurement for Cs Evaporator Eluate Lute Pot (CNP-VSL-00001)

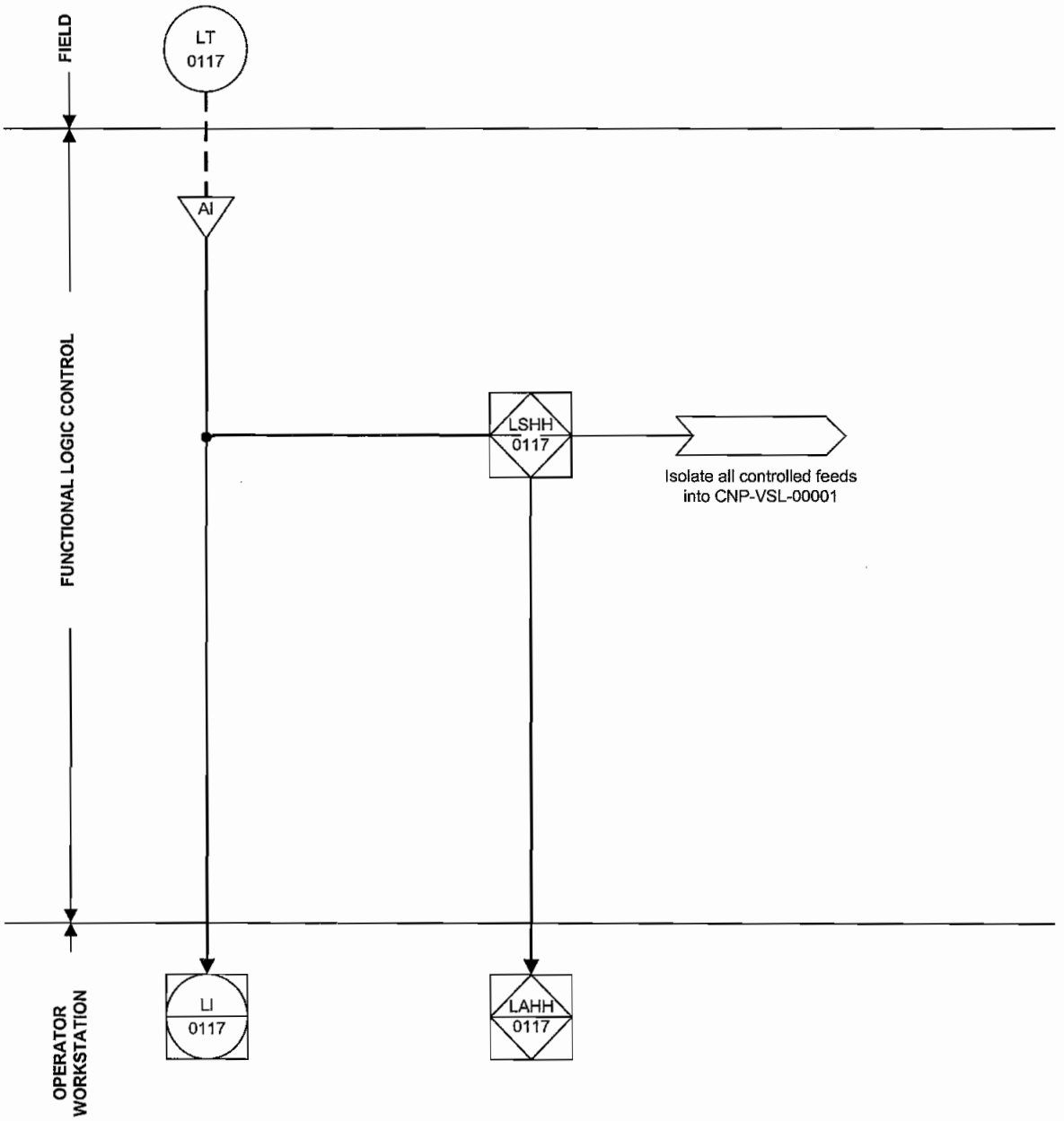

Figure 2. Level Measurement for Eluate Contingency Storage Vessel (CNP-VSL-00003)

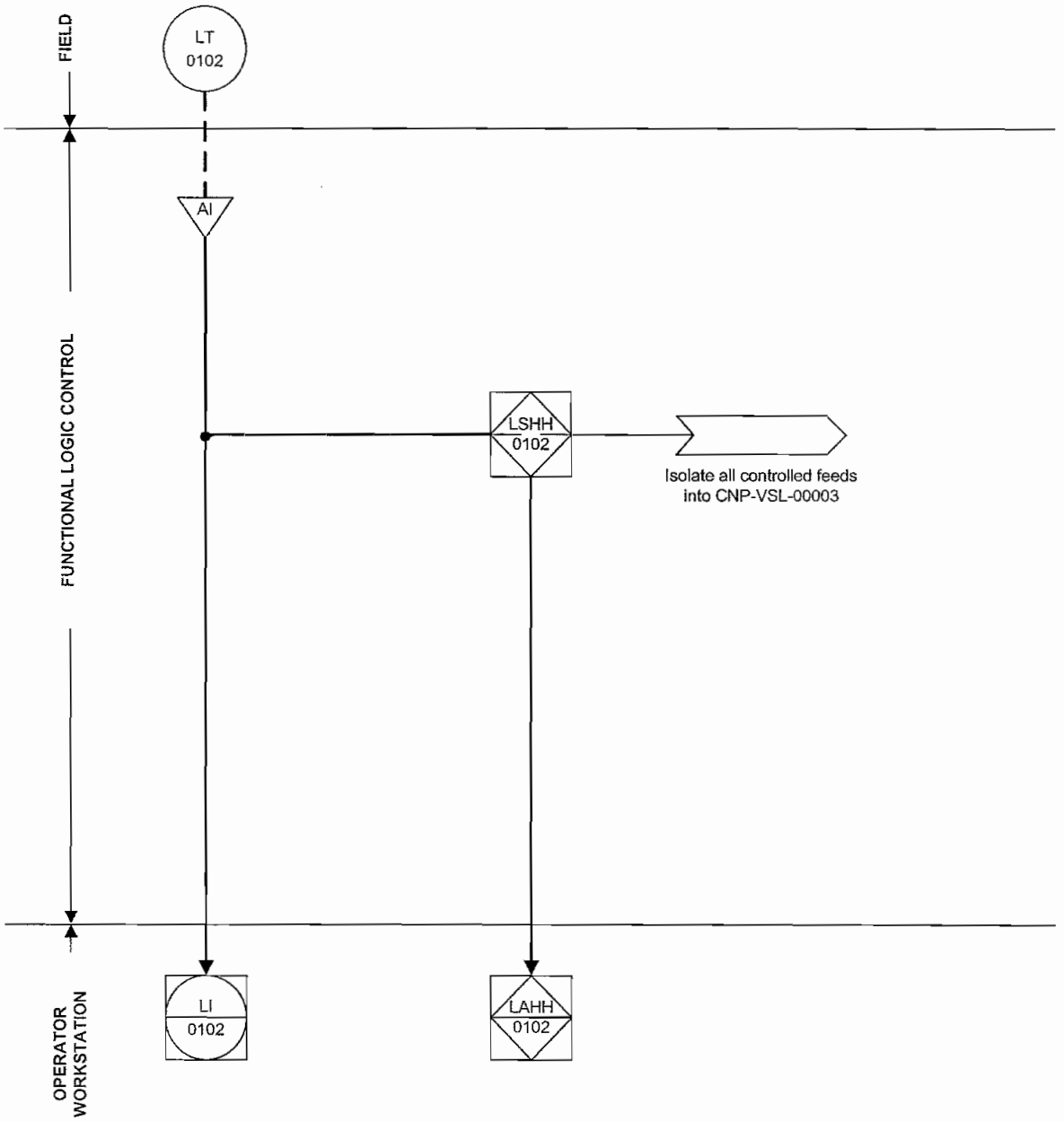

Figure 3. Level Measurement for Cs Evaporator Recovered Nitric Acid Vessel (CNP-VSL-00004)

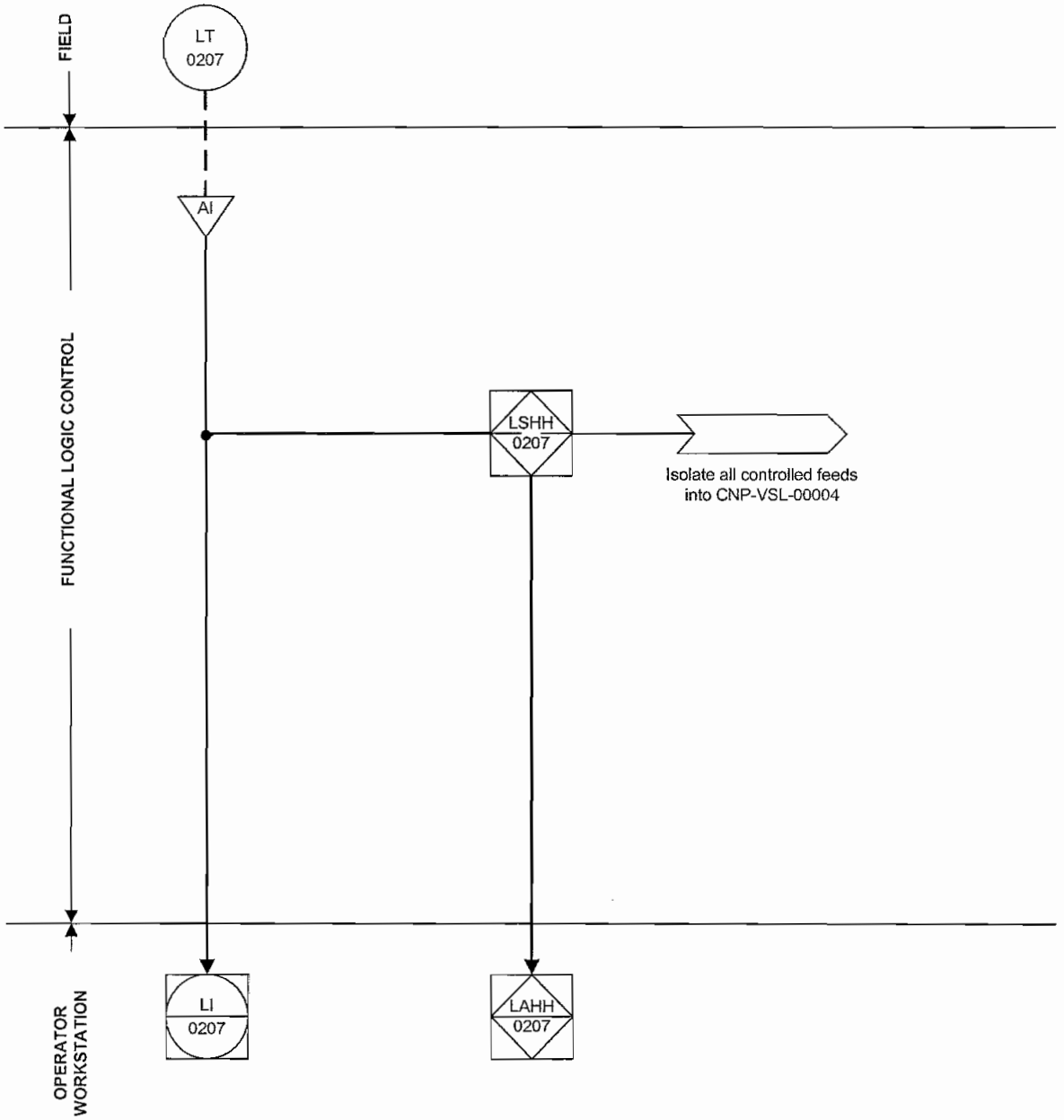

Figure 4. Level Measurement for Cs Evaporator Separator Vessel (CNP-EVAP-00001)

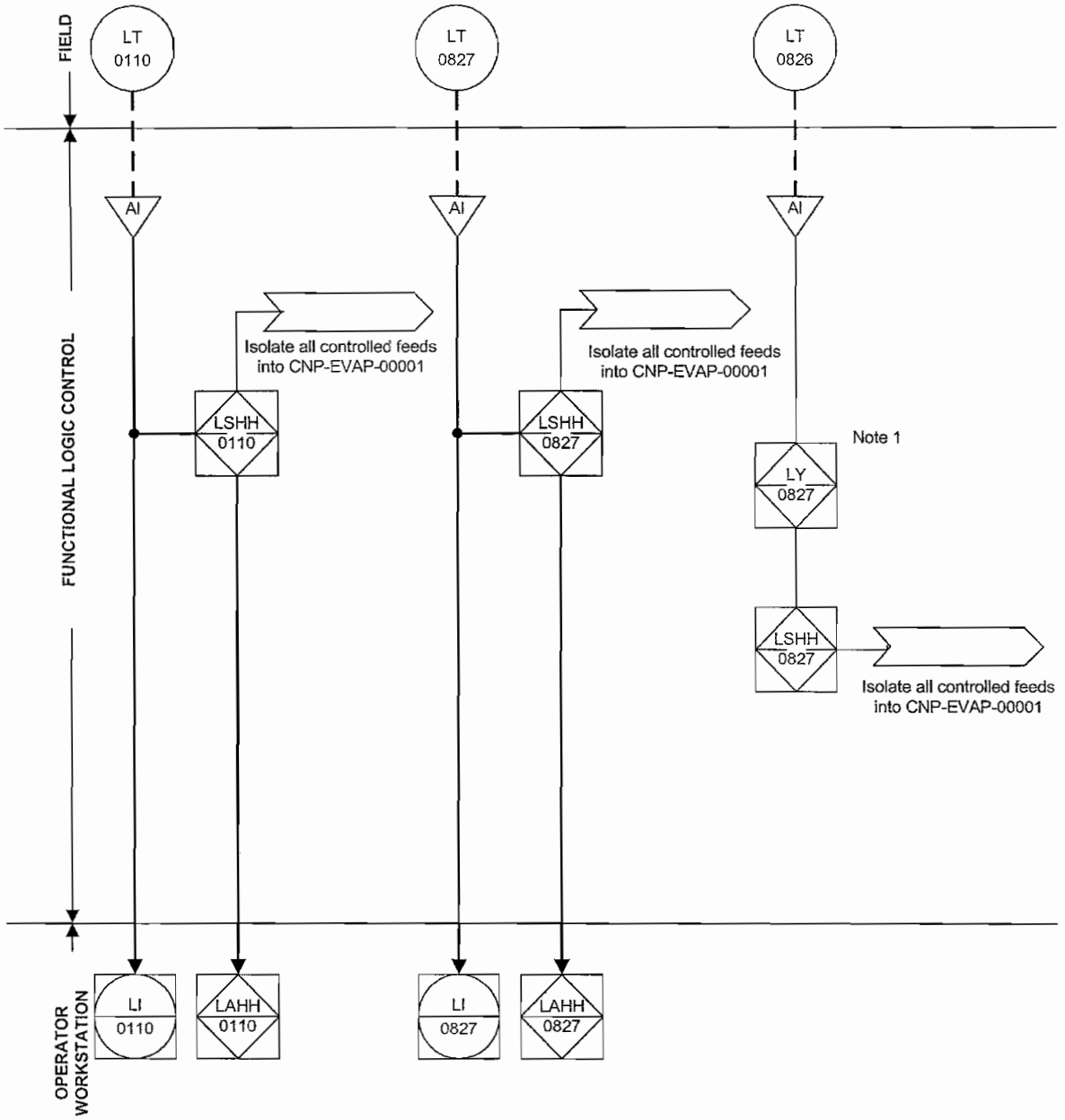

Note:
1. Measures deviation between each leg, once deviation is reached a trip occurs.

Figure 5. Level Measurement for Cs Evaporator Primary Condenser (CNP-HX-00002)

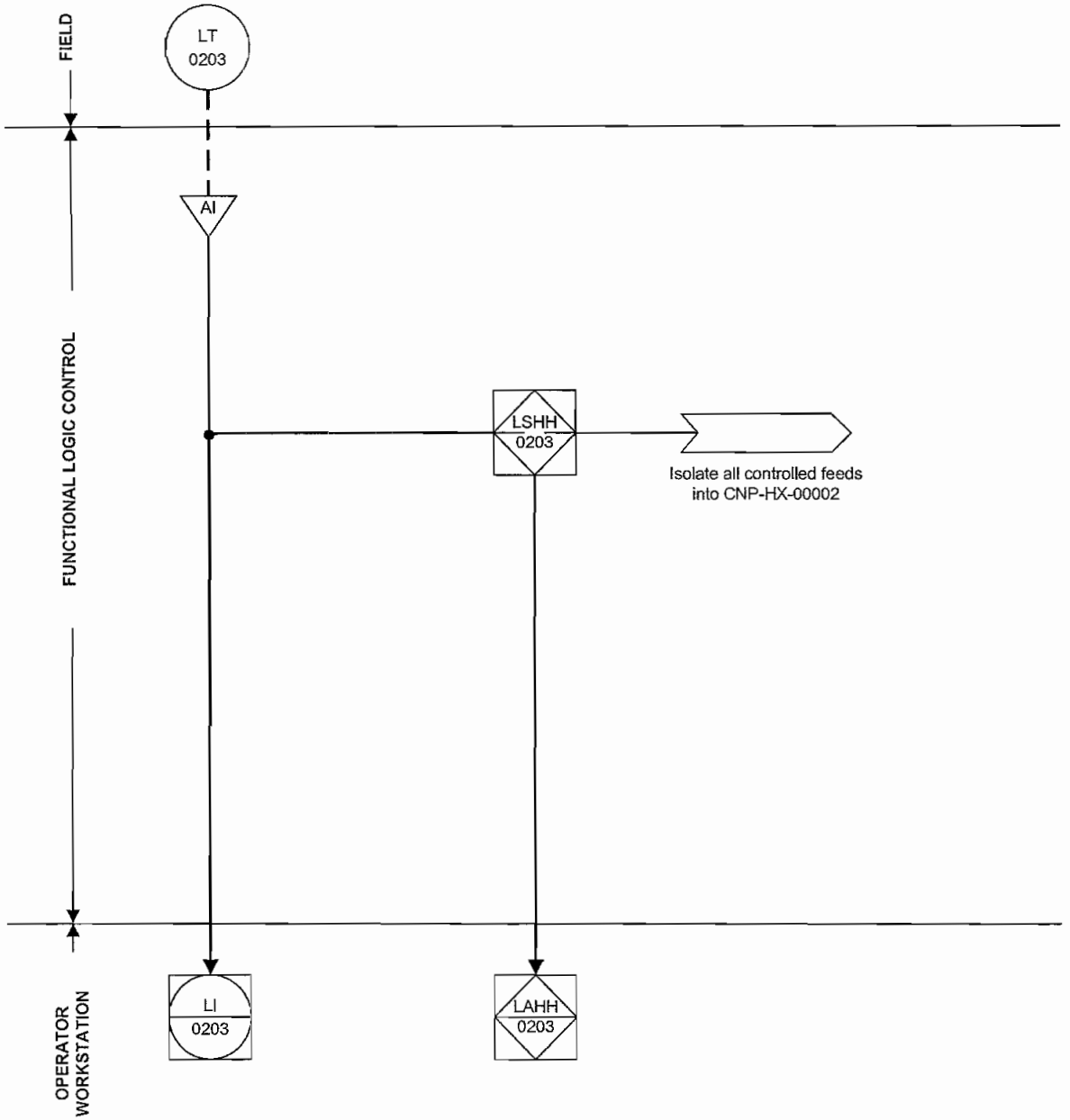

Figure 6. Level Switch for Instrument Bulge (CNP-BULGE-00008)

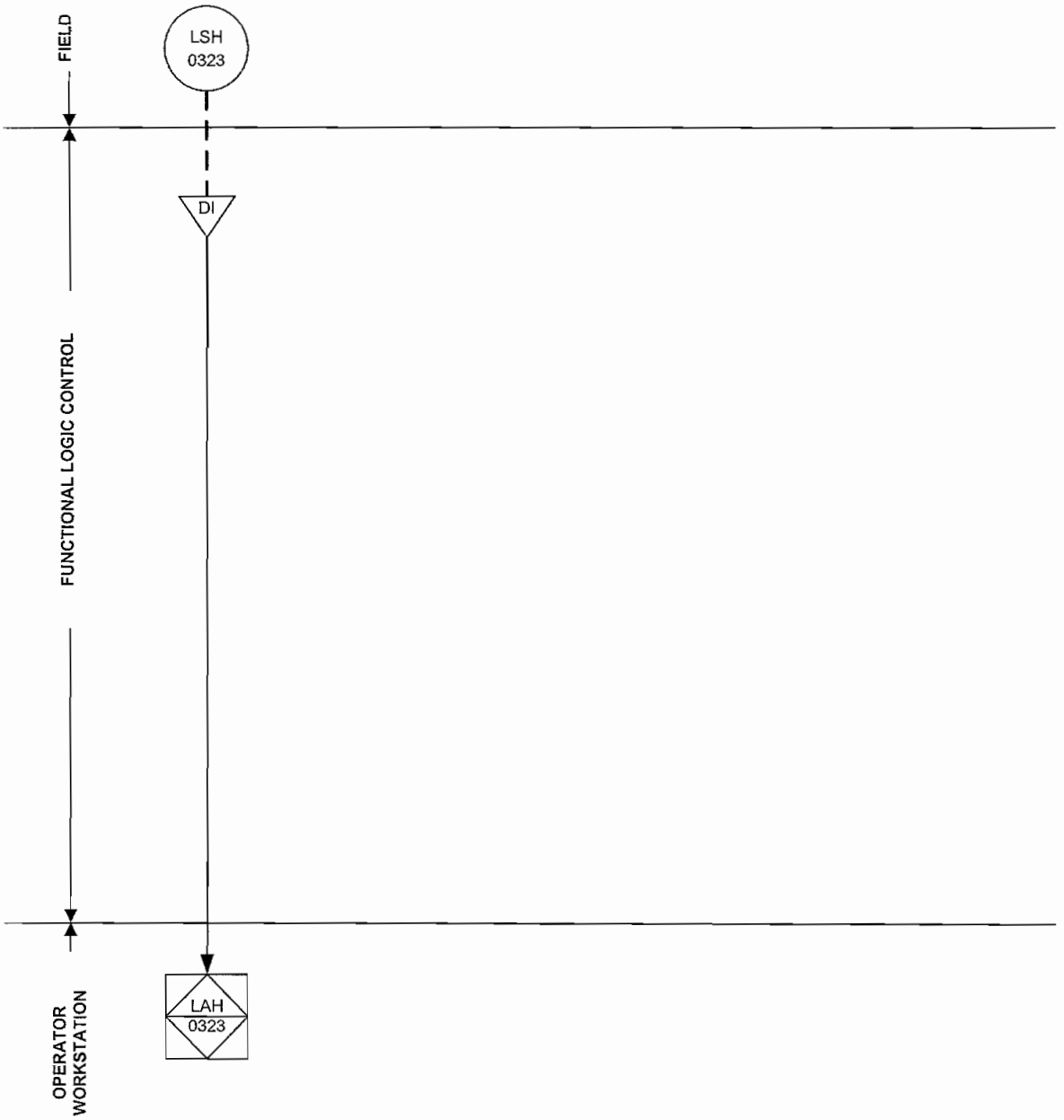

ISSUED BY
RPP-WTP PDC
M2 3/31/04
INIT DATE

R10281165

Document title: **System Logic Description for Pretreatment Facility - Treated LAW Evaporation Process (TLP) System**

Contract number: DE-AC27-01RV14136

Department: Controls and Instrumentation

Author(s): V Maizel M Friedrich

Principal author signature: Vyacheslav Maizel Mark Friedrich

Document number: 24590-PTF-PER-J-02-010, Rev 0

Checked by: M Ko

Checker signature:

Date of issue: 23 March 2004

Issue status: Issued for Permitting Use

Approved by: S Anderson

Approver's position: C&I Engineering Manager

Approver signature: S. E. Anderson

MARK A. FRIEDRICH
STATE OF WASHINGTON
32426
REGISTERED
PROFESSIONAL ENGINEER

Mark A. Friedrich 3-23-04

EXPIRES: 08/31/04

This bound document contains a total of 15 sheets

River Protection Project
Waste Treatment Plant
2435 Stevens Center Place
Richland, WA 99352
United States of America
Tel: 509 371 2000

Notice

Please note that source, special nuclear, and byproduct materials, as defined in the Atomic Energy Act of 1954 (AEA), are regulated at the US Department of Energy (DOE) facilities exclusively by DOE acting pursuant to its AEA authority. DOE asserts that, pursuant to the AEA, it has sole and exclusive responsibility and authority to regulate source, special nuclear, and byproduct materials at DOE-owned nuclear facilities. Information contained herein on radionuclides is provided for process description purposes only.

History Sheet

Rev	Date	Reason for revision	Revised by
0	23 March 2004	Issued for Permitting Use	V Maizel/M Friedrich

Contents

Notice ii

History Sheet iii

Acronyms and Abbreviations v

Glossary vi

1 Introduction 1

2 Applicable Documents 1

3 Description 1

3.1 System Requirement 1

3.1.1 General Process 2

3.1.2 LAW SBS Condensate Receipt Vessels 2

3.1.3 Treated LAW Evaporator Separator Vessel 4

3.1.4 Condensate Collection Vessel 6

Figures

Figure 1 **TLP-LI-0108 for LAW SBS Condensate Receipt Vessel (TLP-VSL-00009A)** 7

Figure 2 **TLP-LI-0217 for Condensate Collection Vessel (TLP-VSL-00002)** 8

Figure 3 **TLP-LI-0308 for Treated LAW Evaporator Separator Vessel (TLP-SEP-00001)** 9

Acronyms and Abbreviations

Reference the *P&ID Symbols and Legend Sheets*, as listed in the Applicable Documents section, for acronyms and abbreviations employed on the attached figures.

AEA	Atomic Energy Act of 1954
ASD	adjustable speed drive
CXP	cesium ion exchange process
DOE	US Department of Energy
LAH	level alarm high
LAHH	level alarm high-high
LAW	low-activity waste
LC	level controller
LI	level indication
LOL	lower operating limit
LOL	lower operating limit
LSH	level switch high
LSHH	level switch high-high
LT	level transmitter
PCS	process control system
PT	pretreatment
PWD	plant wash and disposal
RLD	radioactive liquid waste disposal
SBS	submerged bed scrubber
SHR	sodium hydroxide reagent addition
TCP	treated LAW concentrate storage process
TLP	treated LAW evaporation process
UOL	upper operating limit

Glossary

acquire	Acquire is a command under a batch control that reserves a group of equipment for that particular batch sequence.
actual volume	Actual volume is the amount, in US gallons, of the waste and process fluid in any vessel.
available space	Available space refers to the volume, in US gallons, of waste and process fluid that a vessel can receive and remain below its upper operating limit (UOL). Available space can be calculated as follows: *Available Space = UOL - Actual Volume*
available volume	Available volume refers to the volume, in US gallons, of waste and process fluid that any vessel can transfer to another vessel and remain above its lower operating limit (LOL). Available volume can be calculated as follows: *Available Volume = Actual Volume - LOL*
batch	This refers to material that is being produced or that has been produced by a single execution of a batch process.
batch control	This term refers to control activities and control functions that provide a means to process finite quantities of material over a finite period of time using one or more pieces of equipment and an ordered set of processing activities.
exception handling	This term refers to the functions that deal with plant or process contingencies, and other events, that occur outside the normal or desired behavior of batch control.
permissive	A permissive is an interlock that allows a device to change state or allows a sequence to start. Once a device has changed state or a sequence started, a permissive has no further effect on the device or sequence.
release	Release is a command under a batch control that opens up a group of equipment for any batch control to acquire.
trip	A trip is a conditional interlock that forces a device or a sequence to a defined state. A trip continues to have an effect on the device or sequence until the interlock condition no longer exist.

1 Introduction

This document describes the control logic for dangerous waste regulated systems and components for the treated low-activity waste (LAW) evaporation process (TLP) system within the pretreatment (PT) facility.

2 Applicable Documents

24590-PTF-3YD-TLP-00001, *System Description for Treated LAW Evaporation Process (TLP).*

24590-PTF-M6-TLP-P0001, *P&ID - PTF Treated LAW Evaporation Process System LAW SBS Condensate Receipt TLP-VSL-00009A & 9B.*

24590-PTF-M6-TLP-P0002, *P&ID - PTF Treated LAW Evaporation Process System Condensers & Condensate Collection TLP-VSL-00002.*

24590-PTF-M6-TLP-P0003, *P&ID - PTF Treated LAW Evaporation Process System Separator TLP-SEP-00001.*

24590-WTP-M6-50-P0001, *P&ID Symbols and Legend Sheet 1 of 6.*

24590-WTP-M6-50-P0002, *P&ID Symbols and Legend Sheet 2 of 6.*

24590-WTP-M6-50-P0003, *P&ID Symbols and Legend Sheet 3 of 6.*

24590-WTP-M6-50-P0004, *P&ID Symbols and Legend Sheet 4 of 6.*

24590-WTP-M6-50-P0005, *P&ID Symbols and Legend Sheet 5 of 6.*

24590-WTP-M6-50-P0006, *P&ID Symbols and Legend Sheet 6 of 6.*

3 Description

3.1 System Requirement

The vessels (along with corresponding pumps, valves, and instruments) associated with dangerous waste management within the TLP system are the following:

TLP-VSL-00009A/B	LAW submerged bed scrubber (SBS) condensate receipt vessels
TLP-SEP-00001	treated LAW evaporator separator vessel
TLP-VSL-00002	condensate collection vessel

3.1.1 General Process

The TLP system primarily serves to evaporate the treated LAW condensate from the cesium ion exchange process (CXP) system and the process condensate that would otherwise accumulate in the plant radioactive liquid waste disposal (RLD) systems in the PT and LAW facilities.

The primary mode of operation has one LAW SBS condensate receipt vessel (TLP-VSL-00009A or TLP-VSL-00009B) receiving treated condensate from the RLD systems, while the other vessel feeds the treated LAW evaporator separator vessel (TLP-SEP-00001).

It is also possible for the treated LAW evaporator separator vessel (TLP-SEP-00001) to be filled from one of the LAW SBS condensate receipt vessels (TLP-VSL-00009A or TLP-VSL-00009B) and one of the treated LAW condensate vessels (CXP-VSL-00026A, CXP-VSL-00026B, or CXP-VSL-00026C) simultaneously.

Concentrated product from the evaporator is sent to the treated LAW concentrate storage process (TCP) system.

Instrumentation, alarms, control, and interlocks will be provided for all vessels in the TLP system to indicate or prevent the following conditions:

- Vessel contents overflow (level indication and passive overflow routes to the ultimate overflow vessel PWD-VSL-00033)
- Loss of system integrity (sump level indication)
- Inadvertent transfer (permissive signals to transfer)
- Vessel level

3.1.2 LAW SBS Condensate Receipt Vessels

The two LAW SBS condensate receipt vessels (TLP-VSL-00009A and TLP-VSL-00009B) are identical.

The two LAW SBS condensate receipt vessels (TLP-VSL-00009A and TLP-VSL-00009B) receive treated LAW condensate and recycle effluent. This condensate is transferred from the process condensate tanks in the PT facility (RLD-TK-00006A or RLD-TK-00006B), process condensate vessels in the LAW facility (RLD-VSL-00003 or RLD-VSL-00005), and the alkaline effluent vessels in the PT facility (RLD-VSL-00017A or RLD-VSL-00017B). The recycle effluent is routed from the condensate collection vessel (TLP-VSL-00002).

For neutralization purposes, either of the LAW SBS condensate receipt vessels (TLP-VSL-00009A or TLP-VSL-00009B) can receive a sodium hydroxide solution from the sodium hydroxide reagent addition (SHR) system. The LAW SBS condensate receipt vessels (TLP-VSL-00009A and TLP-VSL-00009B) are equipped with remote sampling capability.

The LAW SBS condensate receipt vessels (TLP-VSL-00009A and TLP-VSL-00009B) operate by alternating one vessel filling while the other vessel is discharging.

For better control of the transfer operation, transfers are limited by the batch control transfer-in or transfer-out operation per vessel. Once the batch control sequence acquires any of these vessels, no other batch control operation can acquire them until they are released from the initial operation. The acquiring and releasing steps ensure that a vessel cannot transfer or receive from multiple destinations at the same time.

When the correct vessels have been acquired, the transfer-in sequence is initiated. Under normal operating conditions, the transfer-in sequence will be completed when either of the following occurs:

- The required batch volume has been transferred and post-transfer flushing is complete.
- The receipt vessel reaches its upper operating limit (UOL).
- The transferring vessel reaches its lower operating limit (LOL).

When the vessels are released, the process control system (PCS) can then initiate a transfer-out sequence. Under normal operating conditions the transfer-out sequence can be stopped if any of the following occurs:

- The level in a LAW SBS condensate receipt vessel (TLP-VSL-00009A or TLP-VSL-00009B) reaches its lower operating limit (LOL).
- A specified volume is transferred.
- The destination vessel reaches its UOL.

For volume batch transfers, the operator, based on PCS information, confirms that the available space in the destination vessel and the available volume in the sending vessel are consistent with the target batch volume specified by the operator. That means that during the batch transfer the destination UOL and sending LOL are not exceeded.

During the entire transfer-in or transfer-out sequence, the PCS monitors the sump alarms within the PT facility and notifies the operator if an alarm condition occurs. The operator can then manually stop the transfer or allow the batch control to switch to an exception handling logic.

Each step in the batch operation will be performed automatically with built-in operator prompts as dictated by the pre-transfer, during-transfer, and post-transfer operator-PCS interface and controls listed below.

Action	The Goal of the Action
Select receiving vessel (TLP-VSL-00009A or TLP-VSL-00009B).	This will allow proper valve alignment thereby preventing misrouting of feed within PT facility.
Specify the feed volume from each of the source vessels to the selected LAW SBS condensate receipt vessel, based on the available volume, including flush volume.	This will control vessel-filling level, vessel filling sequence, and prevent overflow.
Operator enables permissive to start transfer (for transfer from LAW facility only).	This will authorize initiation of the transfer operation.
Confirm receipt of feed from level in the vessel.	This ensures a controlled operation.

Action	The Goal of the Action
Secure valving.	This will ensure that the valves are in the proper position after the transfer.

The following are interlocks between the TLP system and other systems that are working all the time. These signals tie into the interlock logic performed within each of the control systems. These trips disable the transfer.

Interlock Signal	Usage
• "HIGH" level in any receiving vessel.	This will prevent an overflow condition within TLP.
• Valves are not properly aligned in TLP for transfer from other system within PT facility.	This signal will be used to avoid deadheading of the transfer pump and will prevent a misroute.
• Control valves or associated instrumentation is not functional.	This will ensure that the transfer can be monitored and controlled.
• Operator disables transfer.	This signal will be used as a trip to stop the transfer pump.

Figure 1 shows the interlocks and alarms for the level instruments associated with the LAW SBS condensate receipt vessels (TLP-VSL-00009A and TLP-VSL-00009B).

3.1.3 Treated LAW Evaporator Separator Vessel

The treated LAW evaporator separator vessel (TLP-SEP-00001) can receive waste or condensate from either the LAW SBS condensate receipt vessel (TLP-VSL-00009A or TLP-VSL-00009B) or from any of the cesium ion exchange treated LAW collection vessel (CXP-VSL-00026A, CXP-VSL-00026B, or CXP-VSL-00026C). Transfer to the separator vessel is a continuous process.

In the TLP system, treated LAW condensate transfer to the separator vessel occurs under level control via one of the treated LAW condensate feed ASD control pumps (TLP-PMP-00005A or TLP-PMP-00005B). In the CXP system, treated LAW condensate transfer to the separator vessel occurs via one of the treated LAW condensate feed pumps (CXP-PMP-00002A or CXP-PMP-00002B) at constant flow rate.

Selection of the transfer pump to be used for transferring is done by the operator before starting the evaporation process in the system.

The transferring process is based on the level control in the treated LAW evaporator separator vessel (TLP-SEP-00001). During the normal transfer process, the speed of the transfer pump (in the TLP system only) depends on the level in the vessel: the higher the level is in the vessel, the slower the transfer pump is running and vice versa. In addition, the transfer stops if the "HIGH-HIGH" level alarm in the vessel is activated. This PCS action stops the transfer pump and closes the feed inlet valves.

Each step in the continuous transfer process is performed automatically with built-in operator prompts as dictated by the pre-transfer, during-transfer, and post-transfer operator-PCS interface and controls listed below.

Action	The Goal of the Action
• Select treated LAW condensate feed pump (TLP-PMP-00005A or TLP-PMP-00005B in the TLP system, or CXP-PMP-00002A or CXP-PMP-00002B in the CXP system) to supply the separator vessel (TLP-SEP-00001).	This will allow proper valve alignment thereby preventing misrouting of feed within PT facility.
• Operator enables permissive to start transfer and evaporation.	This will authorize initiation of the transfer process.
• Confirm receipt of feed from level in the vessel.	This ensures a controlled operation.
• Secure valving.	This will ensure that the valves are in the proper position after the transfer.

The following are interlocks within the TLP system that are working all the time. These trips disable the transfer permissive thereby stopping the evaporation process.

Interlock Signal	Usage
• "HIGH-HIGH" level in treated LAW evaporator separator vessel (TLP-VSL-00001).	This signal will be used as a trip to stop the transfer (stop transfer pump and close transfer valves), preventing overfilling of the treated LAW evaporator separator vessel (TLP-VSL-00001).
• Valves are not properly aligned in the TLP system for transfer by the selected transfer pump to the treated LAW evaporator separator vessel (TLP-SEP-00001).	This signal will be used to avoid deadheading of the transfer pump and will prevent a misroute.
• Valves are not properly aligned in the CXP system for transfer by the selected transfer pump to the treated LAW evaporator separator vessel (TLP-SEP-00001).	This signal will be used to avoid deadheading of the transfer pump and will prevent a misroute.
• Control valves or associated instrumentation are not functional.	This will ensure that the transfer can be monitored and controlled.
• Operator disables transfer (evaporation process).	This signal will be used as a trip to stop the transfer pump and change the operating mode.

Figure 3 shows the interlocks and alarms for the level instruments associated with the treated LAW evaporator separator vessel (TLP-SEP-00001).

3.1.4 Condensate Collection Vessel

The condensate collection vessel (TLP-VSL-00002) collects condensate from the condensers (primary condenser, inter-condenser, and after-condenser). During normal operation, the clean condensate is directed to the process condensate vessels (RLD-TK-00006A and RLD-TK-00006B). At the same time, a portion of the condensate outlet is recycled back to the treated LAW evaporator separator vessel (TLP-SEP-00001) for spraying the demister pads. Condensate discharges are batch controlled by upper and lower liquid level setpoints.

Figure 2 shows the interlocks and alarms for level instruments associated with the condensate collection vessel (TLP-VSL-00002).

Figure 1 TLP-LI-0108 for LAW SBS Condensate Receipt Vessel (TLP-VSL-00009A)

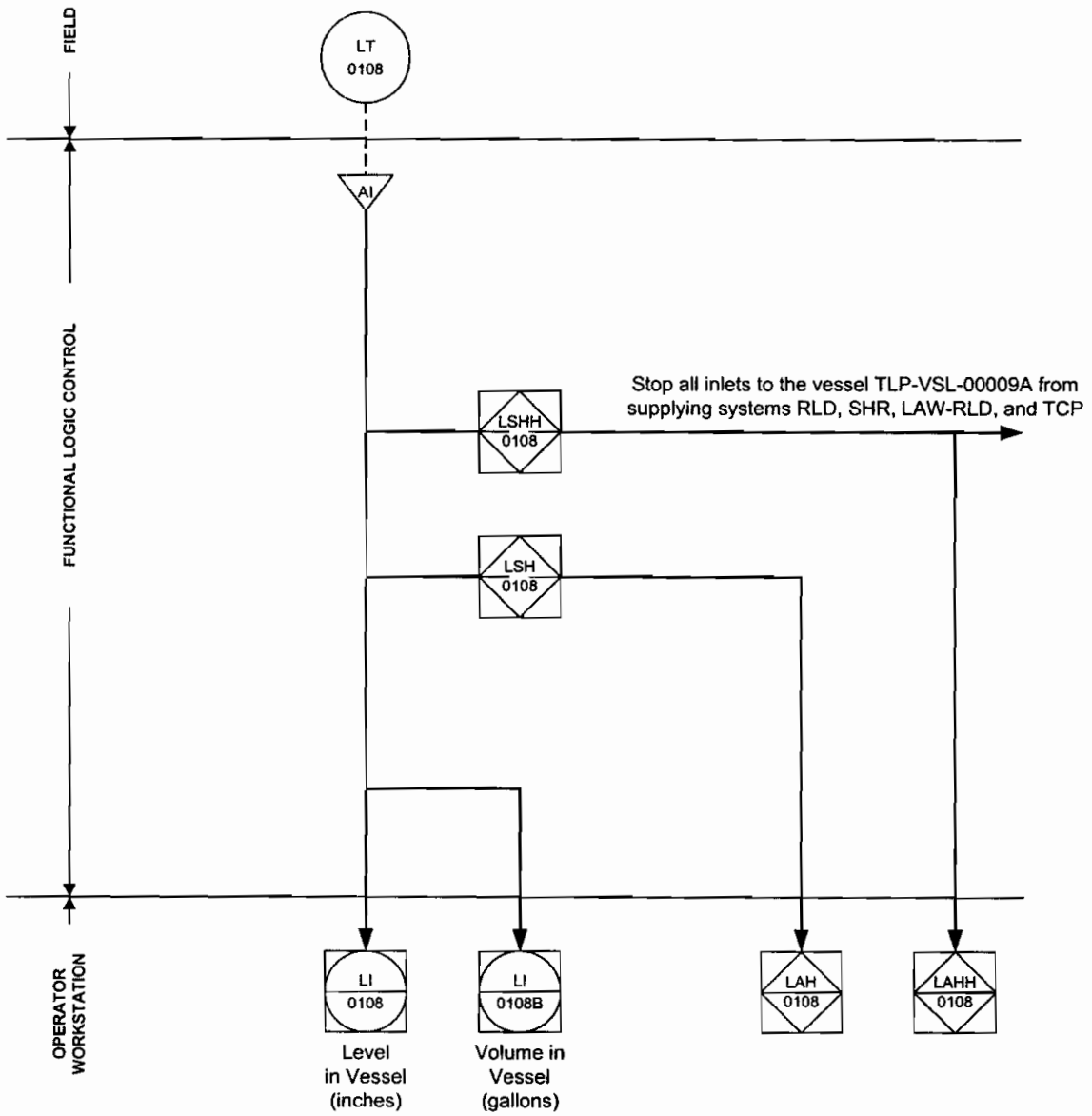

Note: LAW SBS condensate receipt vessels TLP-VSL-00009A and TLP-VSL-00009B have identical logic.

Figure 2 TLP-LI-0217 for Condensate Collection Vessel (TLP-VSL-00002)

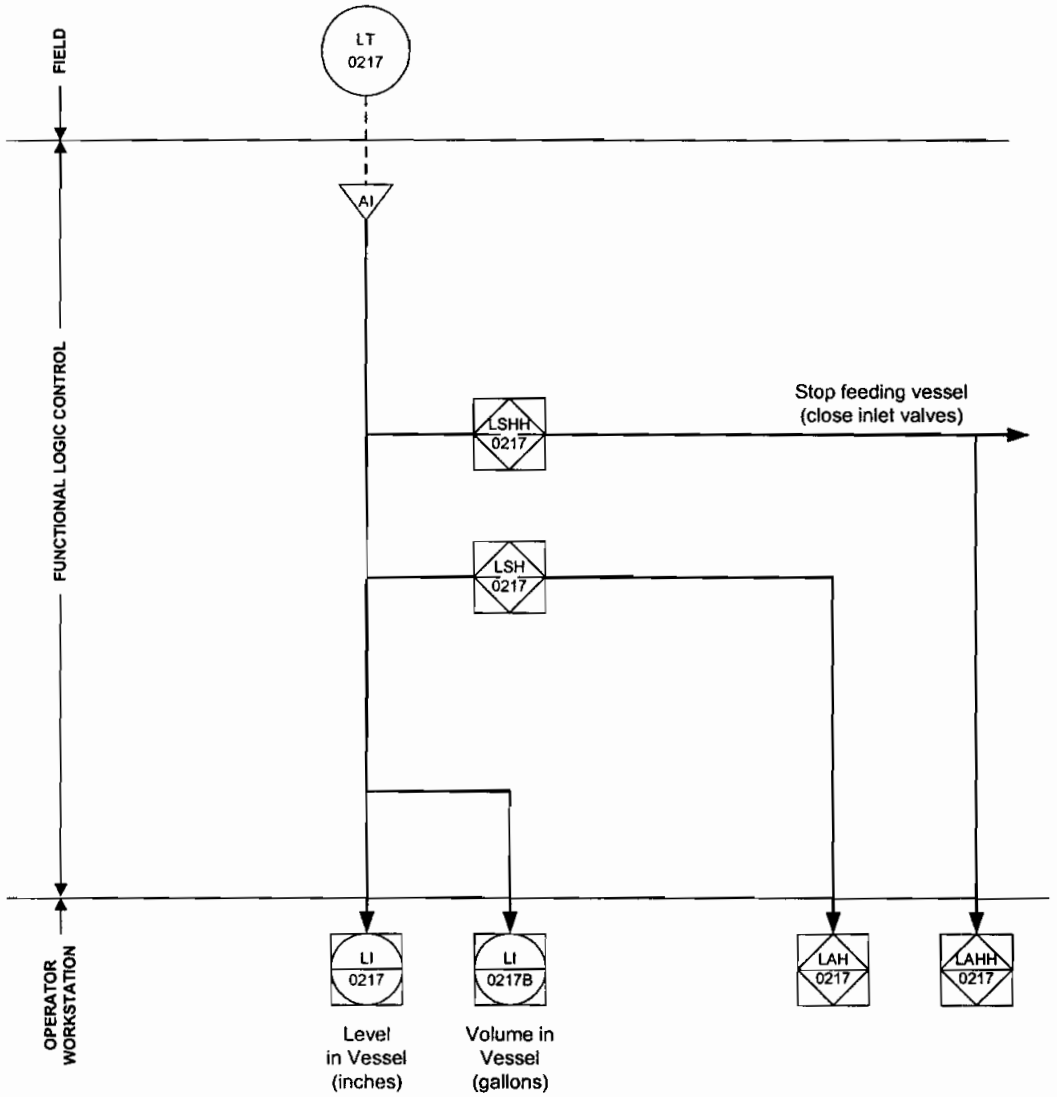

Figure 3 TLP-LI-0308 for Treated LAW Evaporator Separator Vessel (TLP-SEP-00001)

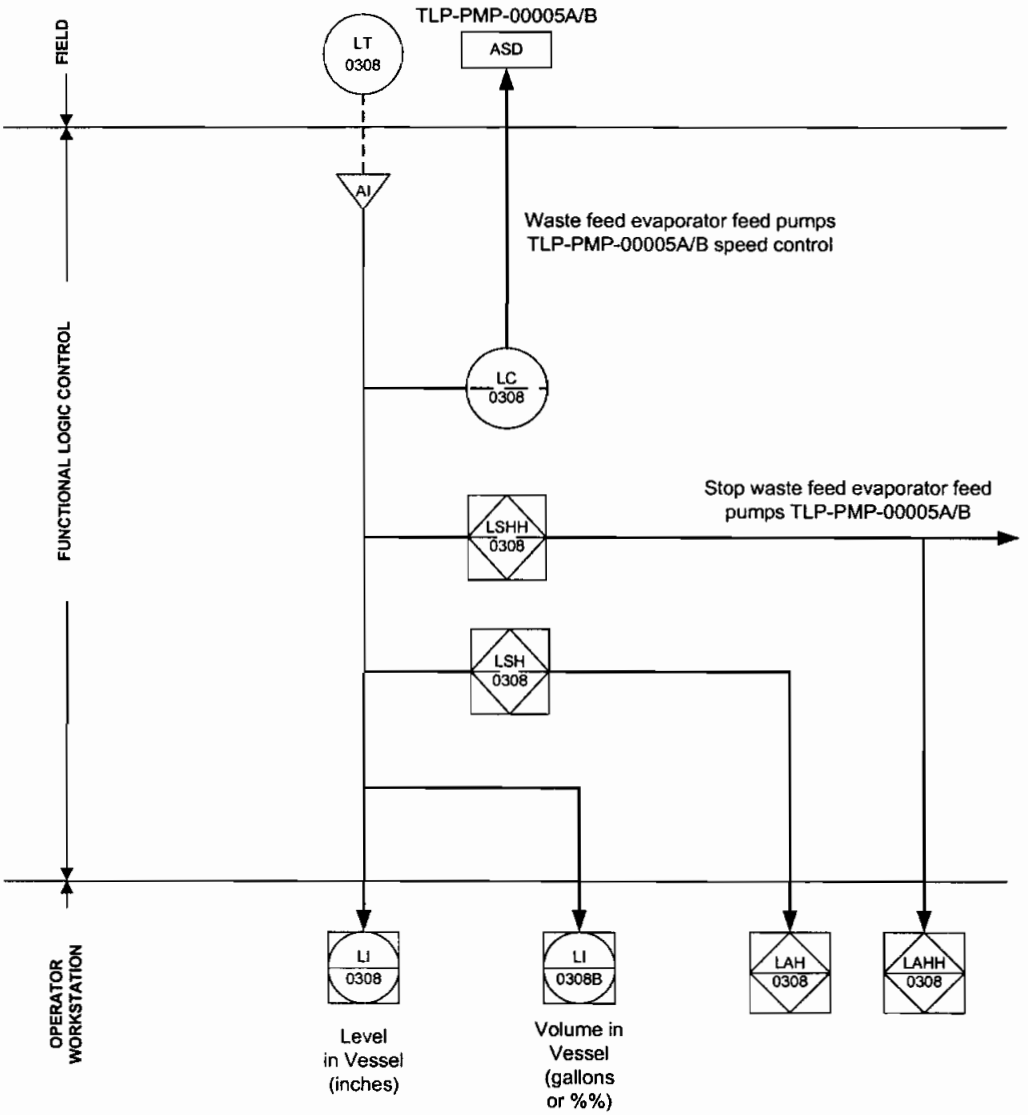

R10306647

Document title: **System Logic Description for Pretreatment Facility Spent Resin Collection and Dewatering Process (RDP) System**

Contract number: DE-AC27-01RV14136

Department: Controls and Instrumentation

Author(s): Mark Woodworth Mark A. Friedrich

ISSUED BY
INIT DATE

Principal author signature: Mark A Friedrich

Document number: 24590-PTF-PER-J-02-011, Rev 0

Checked by: Paul Schmitz

Paul Schmitz

Checker signature:

Date of issue: 22 April 04

Issue status: Issued for Permitting Use

Approved by: Steve E. Anderson

Approver's position: C&I Engineering Manager

MARK A. FRIEDRICH
STATE OF WASHINGTON
32426
REGISTERED
PROFESSIONAL ENGINEER

Mark A Friedrich 4-21-04

EXPIRES: 08 / 31 / 04

Approver signature: S. E. Anderson

This bound document contains a total of 11 sheets

River Protection Project
Waste Treatment Plant
2435 Stevens Center Place
Richland, WA 99352
United States of America
Tel: 509 371 2000

Notice

Please note that source, special nuclear, and byproduct materials, as defined in the Atomic Energy Act of 1954 (AEA), are regulated at the US Department of Energy (DOE) facilities exclusively by DOE acting pursuant to its AEA authority. DOE asserts, that pursuant to the AEA, it has sole and exclusive responsibility and authority to regulate source, special nuclear, and byproduct materials at DOE-owned nuclear facilities. Information contained herein on radionuclides is provided for process description purposes only.

History Sheet

Rev	Date	Reason for revision	Revised by
0	4-22-04	Issued for Permitting Use	MGW

Contents

Notice ii
History Sheet iii
Acronyms and Abbreviations v
Glossary vi
1 Introduction 1
2 Applicable Documents 1
3 Description 1
3.1 RDP-VSL-00002A/B/C 1
3.2 RDP-VSL-00004 3

Figures

Figure 1. Level Measurement for Spent Resin Slurry Vessel (Typical for RDP-VSL-00002A/B/C) 4
Figure 2. Level Measurement for Spent Resin Dewatering Moisture Separation Vessel (RDP-VSL-00004) 5

Acronyms and Abbreviations

AI	Analog input
CRP	Cesium Resin Addition Process System
CXP	Cesium Ion Exchange Process System
FEP	Waste Feed Evaporation Process System
IX	Ion exchange
LAH	Level alarm high
LAHH	Level alarm high high
LI	Level indication
LOL	Lower operating limit
LSH	Level switch high
LSHH	Level switch high-high
LT	Level transmitter
P&ID	Piping and Instrumentation Diagram
PT	Pretreatment
PWD	Plant Wash & disposal
RDP	Spent Resin Collection and Dewatering Process System
UOL	Upper operating limit
WTP	River Protection Project - Waste Treatment Plant

Glossary

acquire	Acquire is a command under a batch control that reserves a group of equipment for that particular batch control operation.
batch	The material that is being produced or that has been produced by a single execution of a batch process.
batch control	This term refers to control activities and control functions that provide an ordered set of processing activities to complete a batch process.
batch process	The production of a finite quantity of material by subjecting quantities of input material to an ordered set of processing activities over a finite period of time using one or more pieces of equipment.
control system	Electronic Processors that perform regulatory and logic control functions necessary for plant normal operation.
exception handling	Those functions that deal with plant or process contingencies and other Logic events, which occur outside the normal or desired behavior of batch control.
interlock	This term refers to a mechanism that automatically brings about or prevents the operation of another mechanism.
lower operating limit	A vessel low-level set point used to stop a transfer-out batch operation from the vessel under normal plant operations.
permissive	Interlock which allows a device to change state or a sequence to start. Once a device has changed state or a sequence started, a permissive has no further effect on the device or sequence.
release	A command under a batch control, that opens up a group of equipment for any batch control to acquire.
trip	A trip is a conditional interlock that forces a device or a sequence to a defined state. A trip continues to have an effect on the device or sequence until the interlock condition no longer exist.
upper operating limit	A vessel high-level setpoint used to stop a transfer-in batch operation to the vessel under normal plant operation.

1 Introduction

This document describes the instrument control logic for tank and ancillary equipment for the spent resin collection and dewatering process (RDP) system within the pretreatment (PT) facility that are associated with dangerous waste management.

2 Applicable Documents

24590-WTP-M6-50-P0001, *P&ID Symbols and Legend Sheet 1 of 6*

24590-WTP-M6-50-P0002, *P&ID Symbols and Legend Sheet 2 of 6*

24590-WTP-M6-50-P0003, *P&ID Symbols and Legend Sheet 3 of 6*

24590-WTP-M6-50-P0004, *P&ID Symbols and Legend Sheet 4 of 6*

24590-WTP-M6-50-P0005, *P&ID Symbols and Legend Sheet 5 of 6*

24590-WTP-M6-50-P0006, *P&ID Symbols and Legend Sheet 6 of 6*

24590-PTF-M6-RDP-P0001, *P&ID-PTF Ion Exchange Spent Resin Collection & Dewatering Process*

24590-PTF-M6-RDP-P0002, *P&ID-PTF Ion Exchange Spent Resin Collection & Dewatering*

3 Description

The following tank and ancillary equipment are associated with dangerous waste management within the RDP system, which resides in the PT facility.

- Spent Resin Slurry Vessels (RDP-VSL-00002A/B/C)
- Spent Resin Dewatering Moisture Separation Vessel (RDP-VSL-00004)

3.1 RDP-VSL-00002A/B/C

The Spent Resin Collection and Dewatering Process utilize a two-vessel process for collecting and disposing of resin, and a third vessel available for the contingency of off-specification resin. The third vessel will allow plant operation to continue without impact while the appropriate disposal path for the off-specification resin is determined. All three spent resin slurry vessels are interchangeable and will be capable of transporting liquid, collecting resin, and being used as contingency.

The spent resin slurry vessels (RDP-VSL-00002A/B/C), with associated piping and controls, serve as both the source of transport liquid and the receipt vessels for spent resin slurry. These vessels are provided to accommodate temporary holdup for resin sampling and analysis while maintaining system operability. Each vessel is designed to contain one full batch of ion exchange resin plus the transport liquid associated with transferring the resin bed out of an IX column. The total batch volume required for removing the spent resin from an IX column is 7,500 gallons per vessel (6,900 gallons of transport fluid and up to 600 gallons of resin). The vessels contain level indication and control capable of operating in clear liquid as well as slurries. During normal operation, a spent resin slurry batch contained in a spent resin slurry vessel will be approximately 5% vol/vol solids.

For greater waste management reliability, batch controlled transfers into each vessel are limited by the control system to one transfer in or out at a time by the batch control mechanism of acquiring and releasing. A batch of transport liquid is sent from one spent resin slurry vessel to an ion exchange column in the CXP system, the transport liquid displaces the spent resin from that ion exchange column as a slurry to a different spent resin slurry vessel in the RDP system. Once acquired, no other batch control operation will be able to coordinate activities with the chosen spent resin slurry vessels (RDP-VSL-00002A/B/C) until they are released.

When the spent resin slurry vessels are available to receive spent resin slurry/send transport liquid, the operator will initiate the transfer sequence. Once the sequence is initiated, the control system will verify that instruments, utilities, and equipment associated with the transfer are within operational parameters. If any of the monitored parameters are not within the specified limits during the transfer, the control system will switch to exception handling logic. The transfer is stopped by the control system when any of the following are true:

- The level in receiving spent resin slurry vessel reaches its upper operating limit (UOL)
- The level of the spent resin slurry vessel sending transport liquid to the IX column reaches its lower operating limit (LOL).

Once the transfer is complete an operator will initiate a sample sequence. Sample results will determine if the resin slurry may be dewatered and concentrated in preparation for disposal.

Once the resin slurry is determined acceptable for disposal, the operator initiates the dewatering sequence within the control system. This sequence sends the spent resin slurry from the filled spent resin slurry vessel to the dewatering unit, which collects the resin and dewaters it, sending the excess fluid back to another spent resin slurry vessel. Once initiated, the control system acquires the dewatering container portion of the system and a spent resin slurry vessel to receive excess fluid. It then verifies that instruments, utilities, and equipment associated with the transfer are within operational parameters and remain as such throughout the transfer. If any of the monitored parameters are not within the specified limits during the transfer, the control system will switch to exception handling logic. The transfer will end when any of the following are true:

- The level in the receiving spent resin slurry vessel reaches its UOL
- The sending entity reaches its LOL.

Once one of the above conditions are met the filled spent resin slurry vessel continues to send slurry to the dewatering system; however, excess fluid is recycled back to the filled spent resin slurry vessel. This will continue until the solids content limit in the stream discharged from the filled spent resin slurry vessel, as indicated by the solids measuring instrument, is reached. The dewatering system is then released.

The spent resin slurry vessels also receive fresh resin transport fluid from the CXP system. Once an IX column is emptied of spent resin an operator will run a sequence to refill the IX column with fresh resin, as a slurry, in from the CRP system. Once initiated, the CXP IX column acquires one of the spent resin slurry vessels to receive the transport fluid. It then verifies that instruments, utilities, and equipment associated with the transfer are within operational parameters and remain as such throughout the transfer. If any of the monitored parameters are not within the specified limits during the transfer, the control system will switch to exception handling logic. The transfer will end when any of the following are true:

- The level in the receiving spent resin slurry vessel reaches its UOL
- The set volume of resin slurry has been transferred to the IX column.

Each spent resin slurry vessel will discharge excess fluid to the FEP system as required and add make-up fluid as required. If excess fluid is to be purged from a spent resin slurry vessel an operator will initiate a sequence that

sends the fluid to the FEP system. Once initiated, the spent resin slurry vessel requiring purging acquires FEP-VSL-00017 A or B to receive the fluid to be purged. It then verifies that instruments, utilities, and equipment associated with the transfer are within operational parameters and remain as such throughout the transfer. If any of the monitored parameters are not within the specified limits during the transfer, the control system will switch to exception handling logic. The transfer is stopped by the control system when any of the following are true:

- The level of the sending vessel reaches its lower operating limit (LOL)
- Or a specified volume is transferred.

If make-up fluid to a spent resin slurry vessel is required an operator will initiate a sequence that sends demineralized water to the vessel. Once initiated, a valve is opened allowing flow of water to the vessel. If any of the monitored parameters are not within the specified limits during the transfer, the control system will switch to exception handling logic. The transfer is stopped by the control system when any of the following are true:

- The level in receiving vessel reaches its upper operating limit (UOL)
- Or a specified volume is transferred.

If the level is no longer within the normal operating range due to an abnormality, interlocks along with alarms within the control system help prevent an overflow condition. Figure 1, shows the typical interlocks and alarms for the level instruments associated with the spent resin slurry vessels (RDP-VSL-00002A/B/C). At the high alarm setpoint, an alarm is generated. At the high-high alarm setpoint, an alarm is generated and all dedicated controlled feeds are isolated. Isolation occurs by a combination of either stopping the motive force, closing valves, or a combination.

3.2 RDP-VSL-00004

The spent resin dewatering moisture separation vessel is used to remove moisture from the air circulated through the spent resin dewatering container, dehumidifying the air so that is can be recirculated through the spent resin dewatering container to remove excess fluid from the spent resin to 1% vol/vol. The water removed from the air stream is collected in the spent resin dewatering moisture separation vessel until a UOL setpoint is reached, then the water is pumped out of the vessel (until the LOL is reached) to a spent resin slurry vessel. The operator initiates this operation sequence once the batch of resin has been transferred from the spent resin slurry vessel to the spent resin dewatering container. Once initiated, the dewatering unit acquires a spent resin slurry vessel. It then verifies that instruments, utilities, and equipment associated with the transfer are within operational parameters and remain as such throughout the transfer. If any of the monitored parameters are not within the specified limits during the transfer, the control system will switch to exception handling logic. The sequence is stopped by the control system when any of the following are true:

- The level in the receiving spent resin slurry vessel reaches its UOL
- Or the spent resin in the spent resin dewatering container reaches a free liquid set point of 1% vol/vol.

If the level is no longer within the normal operating range due to an abnormality, interlocks along with alarms within the control system help prevent an overflow condition. Figure 2 shows the interlocks and alarms for the level instrument associated with the spent resin dewatering moisture separation vessel (RDP-VSL-00004). At the high alarm setpoint, an alarm is generated. At the high-high alarm setpoint, an alarm is generated and all dedicated controlled feeds are isolated. Isolation occurs by a combination of either stopping the motive force, closing valves, or a combination.

Figure 1. Level Measurement for Spent Resin Slurry Vessel (Typical for RDP-VSL-00002A/B/C)

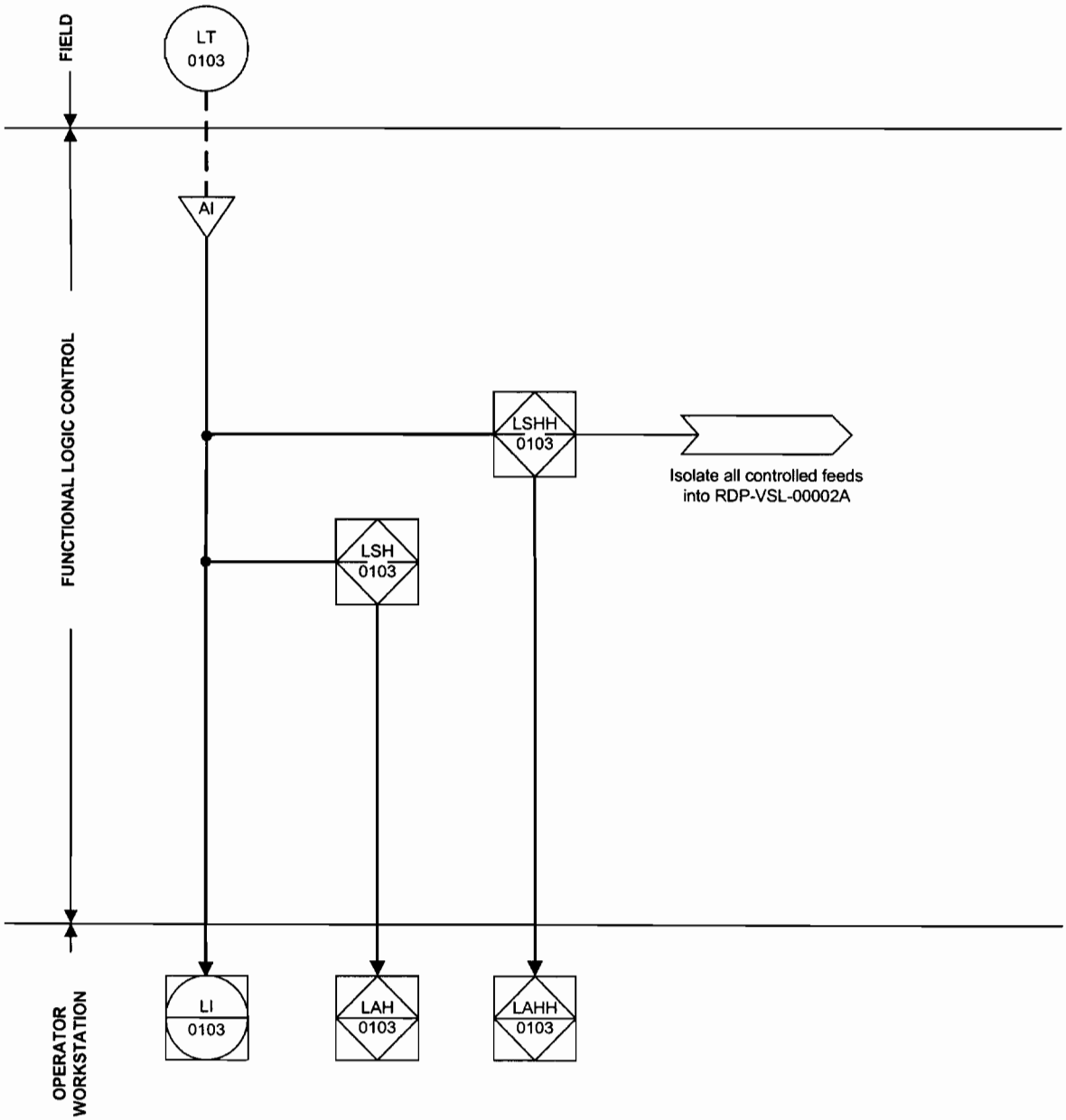

Figure 2. Level Measurement for Spent Resin Dewatering Moisture Separation Vessel (RDP-VSL-00004)

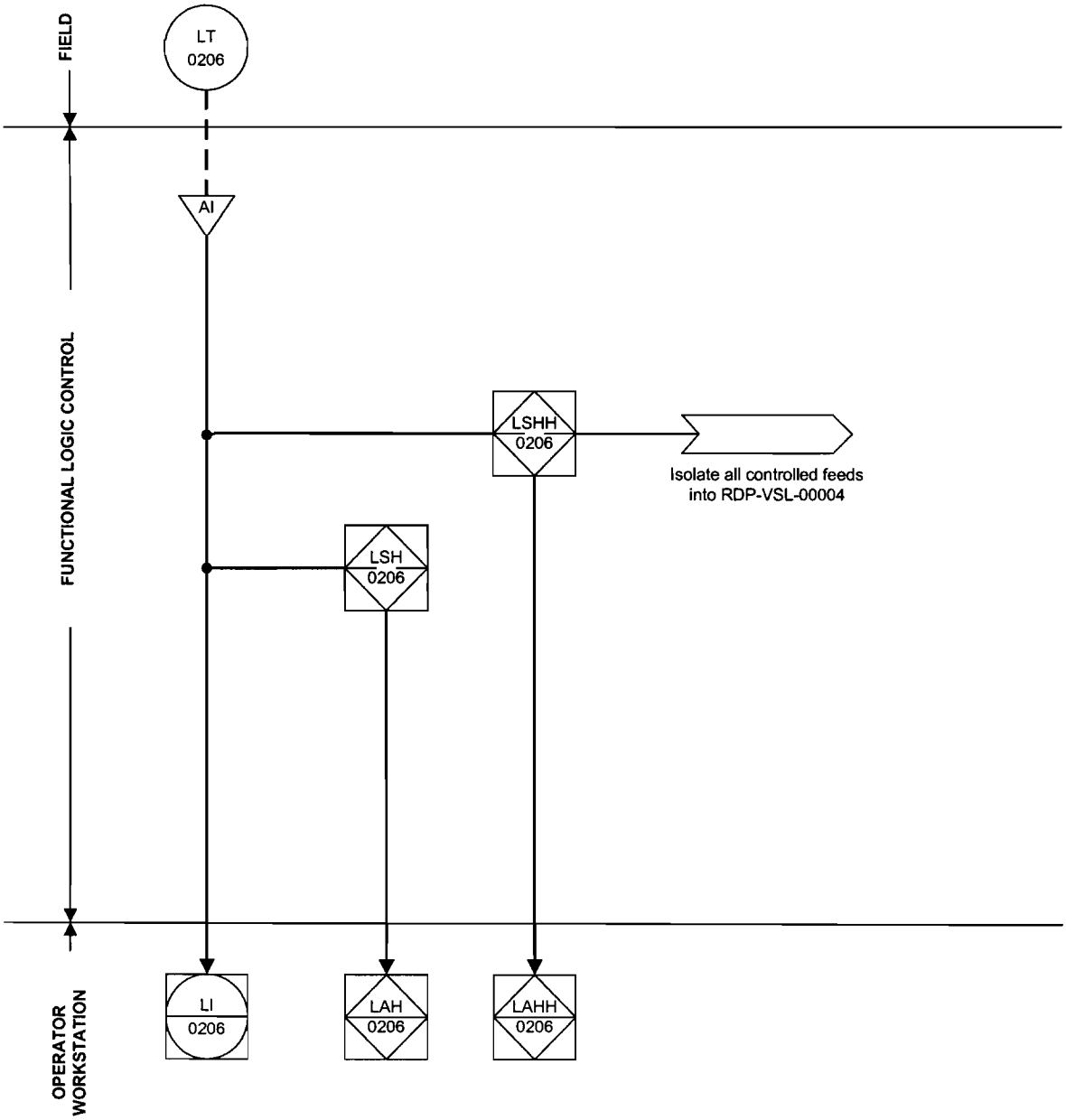

R10135695

DOCUMENT INFORMATION

The following information is required when submitting a document to PDC for issuance.	**Correspondence (CCN) No:** N/A **Document No:** 24590-PTF-PER-J-02-012 **Rev:** 0

Project Information (Check Applicable Box)

☐ Balance of Facilities ☐ HLW Vitrification ☐ Analytical Laboratory ☐ Across all areas

☒ Pretreatment ☐ LAW Vitrification ☐ External Interfaces

Document is applicable to ALARA (as determined by the originator)? ☐ Yes ☒ No

Applicability to ALARA means that the item has the potential to affect doses, contamination levels, or releases to the environment. (See 24590-WTP-GPP-SRAD-002, *Application of ALARA in the Design Process*, sections 4.1 and 4.2 for more information.)

Subject code(s): _____ (for correspondence only)

ACTION ITEM INFORMATION (for correspondence other than meeting minutes)

Commitments: ☐ Yes ☐ No (if yes, brief description below)

Tracked by RITS

Commitment Owed to: _____ Due Date: _____

Actionee(s)			

Tracked by PADC

Written Response Required: ☐ Yes ☐ No

Owed to: _____ Due Date: _____

This correspondence closes action on Correspondence Number _____

☐ Subcontract Files _____ Copies

☐ PAAA Coordinator MS14-4B

☐ Contains SENSITIVE Information

Additional Departmental Info (to facilitate keyword search)

Internal ☐ DNFSB ☐ ORP ☐ OSR ☐ WDOE ☐ WDOH ☐ Other _____

Special Instructions for PDC

10/1/03 10/1/03

☒ Processed Data Entry ☐ Copied QA ☒ Scanned ☐ Filed

ISSUED BY
RPP-WTP PDC
INIT DATE 10/1/03

Document title: **System Logic Description for Pretreatment Facility Treated LAW Concentrate Storage Process System**

Contract number: DE-AC27-01RV14136

Department: Controls and Instrumentation

Author(s): M Friedrich

Principal author signature: Mark Friedrich

Document number: 24590-PTF-PER-J-02-012, Rev 0

Checked by: M Ko

Checker signature: Mau Ko

Date of issue: 9/25/03

Issue status: Issued for Permitting Use

Approved by: S Anderson

Approver's position: C&I Engineering Manager

Approver signature: S. E. Anderson

MARK A. FRIEDRICH
STATE OF WASHINGTON
32426
REGISTERED PROFESSIONAL ENGINEER

Mark A. Friedrich 9-25-03

EXPIRES: 08/31/04

This bound document contains a total of 12 sheets

River Protection Project
Waste Treatment Plant
2435 Stevens Center Place
Richland, WA 99352
United States of America
Tel: 509 371 2000

Notice

Please note that source, special nuclear, and byproduct materials, as defined in the Atomic Energy Act of 1954 (AEA), are regulated at the US Department of Energy (DOE) facilities exclusively by DOE acting pursuant to its AEA authority. DOE asserts that pursuant to the AEA, it has sole and exclusive responsibility and authority to regulate source, special nuclear, and byproduct materials at DOE-owned nuclear facilities. Information contained herein on radionuclides is provided for process description purposes only.

History Sheet

Rev	Date	Reason for revision	Revised by
0	25 September 2003	Issued for Permitting Use	MAF

Contents

1 Introduction 1

2 Applicable Documents 1

3 Description 1

3.1 System Requirement 1

3.1.1 General Process 1

3.1.2 Treated LAW Concentrate Storage Vessel 2

3.1.3 Treated LAW Concentrate Transfer Lines 5

Figures

Figure 1 TCP-LI-0001 for Treated LAW Concentrate Storage Vessel TCP-VSL-00001 6

Acronyms and Abbreviations

Reference the *P&ID Symbols and Legend Sheets*, as listed in the Applicable Documents section, for acronyms and abbreviations employed on the attached figures.

CXP	cesium ion exchange process
FRP	waste feed receipt process
LAH	level alarm high
LAW	low-activity waste
LCP	LAW concentrate receipt process
LOL	lower operating limit
PCS	process control system
PJM	pulse-jet mixer
PJV	pulse-jet ventilation
PT	pretreatment
PWD	plant wash and disposal
TCP	treated LAW concentrate storage process
TLP	treated LAW evaporation process
UFP	ultrafiltration process
UOL	upper operating limit
WTP	Hanford Tank Waste Treatment and Immobilization Plant

Glossary

acquire	Acquire is a command under a batch control that reserves a group of equipment for that particular batch control.
actual volume	Actual volume is the amount, in US gallons, of waste and process fluid in any vessel.
available space	Available space refers to the volume, in US gallons, of waste and process fluid that any vessel can accommodate and still be below the upper operating limit (UOL). Available space can be calculated as follows: *Available Space = UOL - Actual Volume.*
available volume	Available volume refers to the volume, in US gallons, of waste and process fluid that any vessel can transfer to another vessel and still remain above the lower operating limit (LOL). Available volume can be calculated as follows: *Available Volume = Actual Volume - LOL.*
batch	This refers to material that is being produced or that has been produced by a single execution of a batch process.
batch control	This term refers to control activities and control functions that provide an ordered set of processing activities to complete a batch process.
batch process	A batch process leads to the production of a finite quantity of material by subjecting quantities of input material to an ordered set of processing activities over a finite period of time using one or more pieces of equipment.
exception handling	This term refers to the functions that deal with plant or process contingencies and other events that occur outside the normal or desired behavior of batch control.
permissive	A permissive is an interlock that allows a device to change state or a sequence to start. Once a device has changed state or a sequence has started, a permissive has no further effect on the device or sequence.
release	Release is a command under a batch control that opens up a group of equipment for any batch control to acquire.
trip	A trip is a conditional interlock that forces a device or a sequence to a defined state. A trip continues to have an effect on the device or sequence until the interlock condition no longer exist.

1 Introduction

This document describes the control logic for dangerous waste regulated systems and components for the Treated LAW Concentrate Storage Process (TCP) system within the pretreatment (PT) facility.

2 Applicable Documents

24590-PTF-M6-TCP-P0001, *P&ID - PTF. Treated LAW Concentrate Storage System TCP-VSL-00001.*

24590-PTF-M6-TCP-P0002, *P&ID - PTF. Treated LAW Concentrate Storage Utility Services – PSA Rack (Q).*

24590-WTP-M6-50-P0001, *P&ID Symbols and Legend Sheet 1 of 6.*

24590-WTP-M6-50-P0002, *P&ID Symbols and Legend Sheet 2 of 6.*

24590-WTP-M6-50-P0003, *P&ID Symbols and Legend Sheet 3 of 6.*

24590-WTP-M6-50-P0004, *P&ID Symbols and Legend Sheet 4 of 6.*

24590-WTP-M6-50-P0005, *P&ID Symbols and Legend Sheet 5 of 6.*

24590-WTP-M6-50-P0006, *P&ID Symbols and Legend Sheet 6 of 6.*

24590-PTF-3YD-TCP-00001, *System Description for Treated LAW Concentrate Storage Process (TCP).*

3 Description

3.1 System Requirement

The vessels and pumps (along with corresponding valves and instrumentation) associated with dangerous waste management within the TCP system are the following:

- TCP-VSL-00001, treated LAW concentrate storage vessel
- TCP-PMP-00001A, treated LAW concentrate transfer pump
- TCP-PMP-00001B, treated LAW concentrate transfer pump

3.1.1 General Process

The TCP system is primarily used as a buffer between the PT facility and the LAW vitrification facility. It is the collection point in the PT facility for treated LAW concentrate, normally from the treated LAW evaporation process (TLP) system evaporator (vessel TLP-SEP-00001), before it is distributed to the LAW vitrification facility. The TCP system stores enough treated concentrate to continue supplying the LAW vitrification facility with feed for approximately seven days in the event of a process interruption in the PT facility.

Additionally the TCP system includes routing for the following:

Event and Route	Notes
Receipt of treated LAW from the Cesium Ion Exchange Process system (vessels CXP-VSL-00026A/B/C)	Infrequent events
Recycle of off-specification LAW concentrate to the TLP system (vessels TLP-VSL-00009A/B)	
Receipt of treated solids from the ultrafiltration process (UFP) system (vessels UFP-VSL-00002A/B)	These upstream transfers will be administratively controlled and require manual installation of a jumper.
Transfer of off-specification LAW concentrate to the waste feed receipt process (FRP) system (vessels FRP-VSL-00002A/B/C/D)	
Transfer and return of excess LAW concentrate to and from the FRP system (vessels FRP-VSL-00002A/B/C/D)	

3.1.2 Treated LAW Concentrate Storage Vessel

Instrumentation, alarms, controls, and interlocks are provided for the TCP system to indicate or prevent the following conditions:

- Vessel contents overflow (level indication)
- Loss of system integrity (black cell or bulge sump level indication)
- Inadvertent transfer ("acquire and release" logic in the process control system (PCS) to control the LAW concentrate transfer pumps)
- Inaccurate vessel level (density compensation to indicate true level)

The treated LAW concentrate storage vessel (TCP-VSL-00001) is designed to receive a continuous feed from the treated LAW evaporation process (TLP) system vessel TLP-SEP-00001. The treated LAW concentrate is then transferred out in batches to the LAW vitrification facility. A batch transfer will be required each time one of the two concentrate receipt vessels (LCP-VSL-00001, LCP-VSL-00002) in the LAW vitrification facility is empty. The capability to transfer treated concentrate to a future LAW vitrification facility is also maintained.

Treated LAW concentrate storage vessel (TCP-VSL-00001) may also receive treated LAW from the cesium ion exchange process system bypassing the TLP system. Treated solids from UFP system vessels UFP-VSL-000002A and UFP-VSL-000002B may also be blended with the treated LAW concentrate in vessel TCP-VSL-00001, if the solids meet the specifications for LAW vitrification. This is not expected to occur very often and requires a jumper, which is not normally installed.

LAW concentrate from LAW concentrate vessel TCP-VSL-00001 can be transferred to (and return back from) the FRP system (waste feed receipt vessels FRP-VSL-00002A, FRP-VSL-00002B, FRP-VSL-00002C, and FRP-VSL-00002D). This is not expected to occur very often and requires a jumper, which is not normally installed.

For better control of any transfer operation for the treated LAW concentrate storage vessel (TCP-VSL-00001), transfers are limited by the batch control transfer-out or transfer-in operation only.

Once the batch control acquires the TCP vessel, no other batch control operation can acquire this vessel until it is released from the initial operation. The acquiring and releasing steps ensure that this vessel cannot transfer in or out, or receive and transfer from multiple destinations at the same time. "Acquire and release" logic does not apply to the discharge of concentrate from the evaporator system TLP.

When one of the treated LAW collection vessels (LCP-VSL-00001 or LCP-VSL-00002) is ready to receive feed from the TCP system, the Operator will initiate the transfer-out batch control operation. This operation will prompt the operator to confirm that all pre-start interface control requirements are satisfied. The sequence will not start until the operator acknowledges the prompt. At this time, the PCS will also be monitoring the parameters that constitute the permissives and trips, and will perform the data transfer between the TCP system and LAW facility.

Once the prompt is acknowledged by the operator and the transfer line is selected, the PCS will automatically align all the necessary valves. The position feedback switches for these valves are monitored by the PCS. If any of the valves are not in the correct position, the sequence will be switched to an exception handling function that stops the transferring operation and initiates pre-determined corrective actions.

Under normal operating conditions the transfer-out sequence in the TCP system, once initiated, will be completed when any of the following occurs:

- The required batch has been transferred and post-transfer flushing and draining are completed.
- The destination vessel reaches its UOL.
- The treated LAW concentrate storage vessel TCP-VSL-00001 level reaches its LOL.

The transferring process to the TCP system stops if the "HIGH-HIGH" level alarm in the ultimate overflow vessel (PWD-VSL-00033) is activated. This action stops any feed from being pumped to or from the TCP system. This interruption will occur regardless of the current status of the transferring process.

When the level in the treated LAW concentrate storage vessel (TCP-VSL-0001) is no longer within the normal operating range, interlocks within the PCS will prevent an overflow. Upon sensing a "HIGH-HIGH" level, the PCS displays a high alarm to the operator and automatically stops all transferring operations to the TCP system.

During the entire transfer-out or transfer-in sequence, the PCS continually monitors the sump alarms within the PT facility and notifies the operator if an alarm condition occurs. The operator can then manually stop the transfer or allow the control system to switch to an exception handling function.

Each step in the batch operation will be performed automatically with built-in operator prompts as dictated by pre-transfer, during-transfer, and post-transfer operator and PCS interfaces and controls listed below.

Action	The Goal of the Action
• Select one of the three transfer lines	This will allow for proper valve alignment, thereby preventing misrouting of LAW concentrate in PTF and LAW facility

Action	The Goal of the Action
• Specify the batch feed volume based on the available volume (in US gallons) in the treated LAW concentrate storage vessel (TCP-VSL-00001) and available space in the treated LAW collection vessel (LCP-VSL-00001/2)	This will control only batch transfers
• Operator enables transfer	This will authorized initiation of transfer operation
• Confirm start (via flow totalizer) of transfer	This ensures that the valves are aligned properly.
• Confirm transferring of concentrate via flow totalizer instrumentation	This ensures a controlled operation
• Confirm that volume is available in the ultimate overflow vessel (PWD-VSL-00033) to receive transfer line post-flush drain.	This will prevent overflow to the ultimate overflow vessel (PWD-VSL-00033).
• Drain pipeline flush	This will ensure that no flush liquid remains in the lines
• Secure valving.	This will ensure that the valves are in the proper position after the transfer.
• Calculate the actual LAW concentrate volume sent to the LAW facility	This will confirm sending of actual amount of LAW concentrate to the LAW facility for record keeping

The following are interlocks between the PT facility and the LAW facility that are working all the time. These signals tie into the interlock logic performed within each of the control systems (PT facility and the LAW facility). These trips disable the transfer operation.

Interlock Signal	Usage
• Valves are not properly aligned in the PT facility for transfer to the LAW facility.	This signal will avoid deadheading of the transfer pump and will prevent misroute
• Control valves or associated instrumentation are not functional.	This will ensure that the transfer can be monitored and controlled.
• "HIGH" level alarm in transfer line leak pot	This signal is used as a trip to stop the transfer upon failure of primary containment and preventing overflow of the ultimate overflow vessel (PWD-VSL-00033)
• "HIGH" level alarm in the black-cell or bulge sumps	This will prevent initiation or stop transfer if vessel and piping integrity within PTF is suspect
• "HIGH-HIGH" level alarm in the treated LAW concentrate storage vessel (TCP-VSL-00001)	This will prevent overflow to the ultimate overflow vessel (PWD-VSL-00033).
• "HIGH-HIGH" level alarm in any of treated LAW collection vessel (LCP-VSL-00001/2)	This will prevent overflow to the overflow collection vessel in the LAW facility

Interlock Signal	Usage
• "HIGH-HIGH" radiation level alarm from radiation monitor	This will prevent transfer of off-specification treated LAW concentrate to the LAW facility
• Operator disables transfer	This signal will be used as a trip in the TCP system logic to stop the transfer pump.

Figure 1 shows the interlocks and alarms for the level control instruments associated with the treated LAW concentrate storage vessel (TCP-VSL-00001).

3.1.3 Treated LAW Concentrate Transfer Lines

Three buried transfer pipelines (that is, a primary, a spare, and an unconnected spare) will be installed to minimize disruptions to facility throughput in the event of a pipeline block or leak. Each pipeline is a coaxial design with a dedicated leak detection system in the annulus of the pipe. The transfer lines are installed with a downward slope towards the PT facility to allow the line flushes and liquid in the annulus to drain to the ultimate overflow vessel (PWD-VSL-00033). The PCS will alarm and prompt the operator in the event of a leak detected in the transfer system

Figure 1 TCP-LI-0001 for Treated LAW Concentrate Storage Vessel TCP-VSL-00001

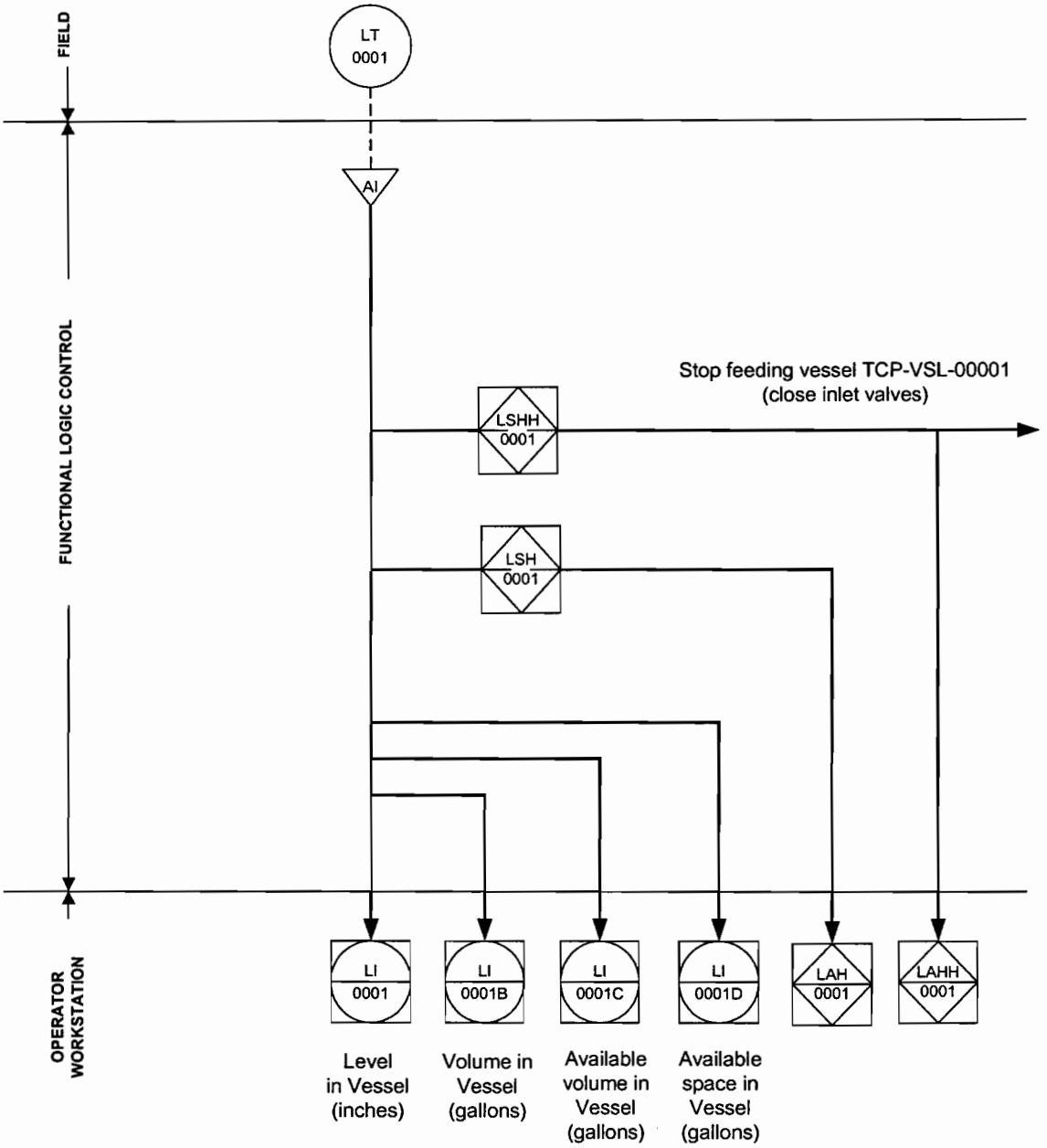

RL-203740

Document title:

System Logic Description for Pretreatment Facility Radioactive Liquid Waste Disposal (RLD) System

ISSUED BY
RPP-WTP PDC
INIT DATE

Contract number: DE-AC27-01RV14136

Department: Controls and Instrumentation

Author(s): M Daggett M Friedrich

Principal author signature: Matt Daggett Mark Friedrich

Document number: 24590-PTF-PER-J-03-001, Rev 0

Checked by: K Herman

Checker signature:

Date of issue: 2-12-04

Issue status: Issued for Permitting Use

Approved by: S Anderson

Approver's position: C&I Engineering Manager

Approver signature:

MARK A. FRIEDRICH
STATE OF WASHINGTON
32426
REGISTERED PROFESSIONAL ENGINEER
EXPIRES: 08/31/04

2-12-04

This bound document contains a total of 16 sheets

River Protection Project
Waste Treatment Plant
2435 Stevens Center Place
Richland, WA 99352
United States of America
Tel: 509 371 2000

Notice

Please note that source, special nuclear, and byproduct materials, as defined in the Atomic Energy Act of 1954 (AEA), are regulated at the US Department of Energy (DOE) facilities exclusively by DOE acting pursuant to its AEA authority. DOE asserts that pursuant to the AEA, it has sole and exclusive responsibility and authority to regulate source, special nuclear, and byproduct materials at DOE-owned nuclear facilities. Information contained herein on radionuclides is provided for process description purposes only.

History Sheet

Rev	Date	Reason for revision	Revised by
0	2-12-04	Issued for Permitting Use	MD/MAF

Contents

Notice ii
History Sheet iii
Acronyms and Abbreviations v
Glossary vi
1 Introduction 1
2 Applicable Documents 1
3 Description 1
3.1 Process Condensate Tank (RLD-TK-00006A) 2
3.2 Process Condensate Tank (RLD-TK-00006B) 2
3.3 Alkaline Effluent Vessel (RLD-VSL-00017A) 4
3.4 Alkaline Effluent Vessel (RLD-VSL-00017B) 4
3.5 Area Sump (RLD-SUMP-00003) 5

Figures

Figure 1 Level Measurement for Process Condensate Tank (RLD-TK-00006A) 6
Figure 2 Level Measurement for Process Condensate Tank (RLD-TK-00006B) 7
Figure 3 Level Measurement for Alkaline Effluent Vessel (RLD-VSL-00017A) 8
Figure 4 Level Measurement for Alkaline Effluent Vessel (RLD-VSL-00017B) 9
Figure 5 Level Measurement for Area Sump (RLD-SUMP-00003) 10

Acronyms and Abbreviations

AI	analog input
ETF	Effluent Treatment Facility
LAH	level alarm high
LAHH	level alarm high-high
LERF	Liquid Effluent Retention Facility
LI	level indication
LOL	lower operating limit
LSH	level switch high
LSHH	level switch high-high
LT	level transmitter
P&ID	piping and instrumentation diagram
PT	Pretreatment
UOL	upper operating limit
WTP	River Protection Project – Waste Treatment Plant

Glossary

acquire	Acquire is a command under a batch control that reserves a group of equipment for that particular batch control operation.
batch	This refers to material that is being produced or that has been produced by a single execution of a batch process.
batch control	This term refers to control activities and control functions that provide an ordered set of processing activities to complete a batch process.
batch process	A batch process leads to the production of a finite quantity of material by subjecting quantities of input material to an ordered set of processing activities over a finite period of time using one or more pieces of equipment.
control system	This term refers to electronic processors that perform regulatory and logic control functions necessary for normal operation of the plant.
exception handling	This term refers to those functions that deal with plant or process contingencies and other events that occur outside the normal or desired behavior of batch control.
interlock	This term refers to a mechanism that automatically brings about or prevents the operation of another mechanism.
LOL	Lower operating limit- A vessel low-level set point used to stop a transfer-out batch operation from that vessel under normal plant operations.
permissive	A permissive is an interlock that allows a device to change state or a sequence to start. Once a device has changed state or a sequence has started, a permissive has no further effect on the device or sequence.
release	Release is a command under a batch control that opens up a group of equipment for any batch control to acquire.
trip	A trip is a conditional interlock that forces a device or a sequence to a defined state. A trip continues to have an effect on the device or sequence until the interlock condition no longer exist.
UOL	Upper operating limit – A vessel high-level setpoint used to stop a transfer-in batch operation to that vessel under normal plant operation.

1 Introduction

This document describes the instrument control logic for tanks and ancillary equipment for the radioactive liquid waste disposal (RLD) system within the pretreatment (PT) facility that are associated with dangerous waste management.

2 Applicable Documents

24590-PTF-M6-RLD-P0001, *P&ID-PTF Radioactive Liquid Waste Disposal System Process Condensate RLD-TK-00006A/B*

24590-PTF-M6-RLD-P0002, *P&ID-PTF Radioactive Liquid Waste Disposal System Process Condensate RLP-PMP-00011A/B & 14A/B*

24590-PTF-M6-RLD-P0003, *P&ID-PTF Radioactive Liquid Waste Disposal System Effluent Collection RLD-VSL-00017A/B & RLD-PMP-00005A/B*

24590-PTF-M6-RLD-P0004, *P&ID-PTF Radioactive Liquid Waste Disposal System Process Condensate Distribution.*

24590-PTF-M6-RLD-P0006, *P&ID-PTF Radioactive Liquid Waste Disposal System Effluent Collection RLD-VSL-00017A/B*

24590-WTP-M6-50-P0001, *P&ID Symbols and Legend Sheet 1 of 6*

24590-WTP-M6-50-P0002, *P&ID Symbols and Legend Sheet 2 of 6*

24590-WTP-M6-50-P0003, *P&ID Symbols and Legend Sheet 3 of 6*

24590-WTP-M6-50-P0004, *P&ID Symbols and Legend Sheet 4 of 6*

24590-WTP-M6-50-P0005, *P&ID Symbols and Legend Sheet 5 of 6*

24590-WTP-M6-50-P0006, *P&ID Symbols and Legend Sheet 6 of 6*

3 Description

The following tank and ancillary equipment are associated with dangerous waste management within the RLD system as a part of the PT facility.

- Process condensate tank (RLD-TK-00006A)
- Process condensate tank (RLD-TK-00006B)
- Alkaline effluent vessel (RLD-VSL-00017A)
- Alkaline effluent vessel (RLD-VSL-00017B)
- Area sump (RLD-SUMP-00003)

3.1 Process Condensate Tank (RLD-TK-00006A)

Process condensate tank (RLD-TK-00006A) receives effluent from multiple sources, and then recycles the condensate within the facility or transfers the condensate to process condensate tank RLD-TK-00006B, depending upon condensate requirements within the PT facility. Transfers in and out of the process condensate tank (RLD-TK-00006A) may occur simultaneously.

When the vessel is available to receive effluent, the operator will initiate the transfer-in sequence. Once the sequence is initiated, the control system will verify that instruments, utilities, and equipment associated with the transfer are within operational parameters. If any of the monitored parameters are not within the specified limits during the transfer, the control system will switch to exception handling logic. The transfer is stopped by the control system when any of the following are true:

- The level in the process condensate tank (RLD-TK-00006A) reaches its upper operating limit (UOL)
- The level of the sending entity reaches its lower operating limit (LOL)

Once the process condensate tank (RLD-TK-00006A) is ready to transfer, the operator will initiate the transfer-out sequence within the control system. Once initiated, the control system verifies those instruments, utilities, and equipment associated with the transfer are within operational parameters and remain as such throughout the transfer. If any of the monitored parameters are not within the specified limits during the transfer, the control system will switch to exception handling logic. The transfer will end when any of the following are true:

- The level in the process condensate tank (RLD-TK-00006A) reaches its lower operating limit (LOL)
- The process condensate tank (RLD-TK-00006B) reaches its upper operating limit (UOL)

When the level is no longer within the normal operating range due to an abnormality, interlocks along with alarms within the control system help prevent an overflow condition. Figure 1 shows the interlocks and alarms for the level instrument associated with the process condensate tank (RLD-TK-00006A). At the high-alarm setpoint, an alarm is generated. At the high-high alarm setpoint, an alarm is generated and all dedicated controlled feeds are isolated. Isolation occurs by a combination of either stopping the motive force or closing valves.

3.2 Process Condensate Tank (RLD-TK-00006B)

Process condensate tank RLD-TK-00006B receives effluent primarily from alkaline effluent vessels RLD-VSL-00017A and RLD-VSL-00017B, samples the effluent when required, and then transfers the condensate to the Liquid Effluent Retention Facility (LERF) or the Effluent Treatment Facility (ETF). Transfers in and out of the process condensate tank (RLD-TK-00006A) may occur simultaneously.

When the vessel is available to receive effluent, the operator will initiate the transfer-in sequence. Once the sequence is initiated, the control system will verify that instruments, utilities, and equipment associated with the transfer are within operational parameters. If any of the monitored parameters are not within the specified limits during the transfer, the control system will switch to exception handling logic. The transfer is stopped by the control system when any of the following are true:

- The level in the process condensate tank (RLD-TK-00006B) reaches its upper operating limit (UOL)
- The level of the sending entity reaches its lower operating limit (LOL)

Due to additional complexities when transferring from the RLD system to LERF/ETF, there are additional controls to administer the transfer. This data exchange is controlled through administrative and hardwired permissive/trip controls.

Administrative controls take place over the telephone between the PT facility and LERF/ETF, and are a part of the pre-start and post-transfer checks.

The pre-start controls are listed as follows and are confirmed prior to commencing the transfer:

Pre-Start Controls	Purpose
• Confirm correct transfer line.	This will allow for proper valve alignment and monitoring of the transfer, since the transfer lines are different sizes and thus have different transfer restrictions.
• Calculate the total volume to be transferred to LERF/ETF.	This will be the setpoint for the flow totalizer.
• Confirm that the level transmitter, temperature transmitter, control valves, flow meters, and other associated instrumentation are functional.	This will ensure that the transfer can be monitored and controlled.

Once the operator initiates the transfer-out sequence, the control system verifies that all instruments, utilities, and equipment associated with the transfer are within operational parameters. If any of the monitored parameters are not within the specified limits during the transfer, the control system will switch to exception handling logic. The transfer will end when a specified volume is transferred.

The following are the post-transfer controls that take place once transfer of feed has been completed:

Post-Transfer Controls	Purpose
• Secure valving.	This will ensure that the valves are in proper position after transfer.
• Calculate volume transferred to LERF/ETF.	This value is used for waste management tracking.

The following data signal (permissive/trip) exchanges between the PT facility and LERF/ETF are monitored before and during a transfer. This exchange is done using signal cables originating at the WTP control system and terminating at LERF/ETF's control system. These signals tie into permissive/trip logics performed on the PT control system.

Permissive/Trip Signal	Purpose
• Detect leaks in the WTP section of the transfer lines.	This signal will be used as a trip to stop the transfer.
• Detect leaks in the LERF/ETF section of the transfer lines.	This signal will be used as a trip to stop the transfer.

When the level is no longer within the normal operating range, due to an abnormality, interlocks along with alarms within the control system help prevent an overflow condition. Figure 2 shows the interlocks and alarms for the level instrument associated with process condensate tank RLD-TK-00006B. At the high-alarm setpoint, an alarm is generated. At the high-high alarm setpoint, an alarm is generated and all dedicated controlled feeds are isolated. Isolation occurs by either stopping the motive force or closing valves, or both.

3.3 Alkaline Effluent Vessel (RLD-VSL-00017A)

Alkaline effluent vessel (RLD-VSL-000017A) receives effluent from multiple sources, samples the effluent, and then, depending upon sample results, transfers effluent into process condensate tank RLD-TK-00006B.

Alkaline effluent vessel (RLD-VSL-00017A) is a mirror image of the other alkaline effluent vessel (RLD-VSL-00017B) and they work in parallel to accomplish their tasks. While one vessel is receiving fluid, the other is sampling and transferring fluid out of the vessel. If the vessel is not sampling or transferring, multiple transfers are allowed into the vessel simultaneously. Once the UOL is reached, the inlet feeds are isolated and the alkaline effluent vessel (RLD-VSL-00017A) is ready to sample and transfer. Meanwhile, the other alkaline effluent vessel (RLD-VSL-00017B) is now enabled to receive fluid.

The sample sequence will mix the contents of the vessel for a specified amount of time and then sample the tank contents. Once the results are processed, the tank contents will be ready to transfer to the proper vessel.

Once the alkaline effluent vessel (RLD-VSL-00017A) is ready to transfer its contents, the operator will initiate the transfer-out sequence within the control system. Once initiated, the control system verifies those instruments, utilities, and equipment associated with the transfer are within operational parameters and remain as such throughout the transfer. If any of the monitored parameters are not within the specified limits during the transfer, the control system will switch to exception handling logic. The transfer will end when any of the following are true:

- The level in the alkaline effluent vessel (RLD-VSL-00017A) reaches its lower operating limit (LOL)
- The level of the receiving entity reaches its upper operating limit (UOL)

When the level is no longer within the normal operating range due to an abnormality, interlocks along with alarms within the control system help prevent an overflow condition. Figure 3 shows the interlocks and alarms for the level instrument associated with the alkaline effluent vessel (RLD-VSL-00017A). At the high-alarm setpoint, an alarm is generated. At the high-high alarm setpoint, an alarm is generated and all dedicated controlled feeds are isolated. Isolation occurs by either stopping the motive force or closing valves, or both.

3.4 Alkaline Effluent Vessel (RLD-VSL-00017B)

Alkaline effluent vessel RLD-VSL-000017B receives effluent from multiple sources, samples the effluent, and then, depending upon sample results, transfers into process condensate tank RLD-TK-00006B.

Alkaline effluent vessel (RLD-VSL-00017B) is a mirror image of the other alkaline effluent vessel (RLD-VSL-00017A) and they work in parallel to accomplish their tasks. While one vessel is receiving fluid, the other is sampling and transferring fluid out of the vessel. If the vessel is not sampling or transferring, multiple transfers are allowed into the vessel simultaneously. Once the UOL is reached, the inlet feeds are isolated and the alkaline effluent vessel (RLD-VSL-00017B) is ready to sample and transfer. Meanwhile, the other alkaline effluent vessel (RLD-VSL-00017A) is now enabled to receive fluid.

The sample sequence will mix the contents of the vessel for a specified amount of time and then sample the tank contents. Once the results are processed, the tank contents will be ready to transfer to the proper vessel.

Once the alkaline effluent vessel (RLD-VSL-00017B) is ready to transfer its contents, the operator will initiate the transfer-out sequence within the control system. Once initiated, the control system verifies those instruments, utilities, and equipment associated with the transfer are within operational parameters and remain as such throughout the transfer. If any of the monitored parameters are not within the specified limits during the transfer, the control system will switch to exception handling logic. The transfer will end when any of the following are true:

- The level in the alkaline effluent vessel (RLD-VSL-00017B) reaches its lower operating limit (LOL)
- The level of the receiving entity reaches its upper operating limit (UOL)

When the level is no longer within the normal operating range due to an abnormality, interlocks along with alarms within the control system help prevent an overflow condition. Figure 4 shows the interlocks and alarms for the level instrument associated with the alkaline effluent vessel (RLD-VSL-00017B). At the high-alarm setpoint, an alarm is generated. At the high-high alarm setpoint, an alarm is generated and all dedicated controlled feeds are isolated. Isolation occurs by either stopping the motive force or closing valves, or both.

3.5 Area Sump (RLD-SUMP-00003)

The area sump (RLD-SUMP-00003) receives overflow from process condensate tank RLD-TK-00006A and process condensate tank RLD-TK-00006B. The sump is maintained dry. Upon detection of a high liquid level in the sump, the control system generates an alarm, at which point the operator must take the necessary action to empty the sump. Figure 5 shows the alarms for the level instruments associated with area sump RLD-SUMP-00003.

Figure 1 Level Measurement for Process Condensate Tank (RLD-TK-00006A)

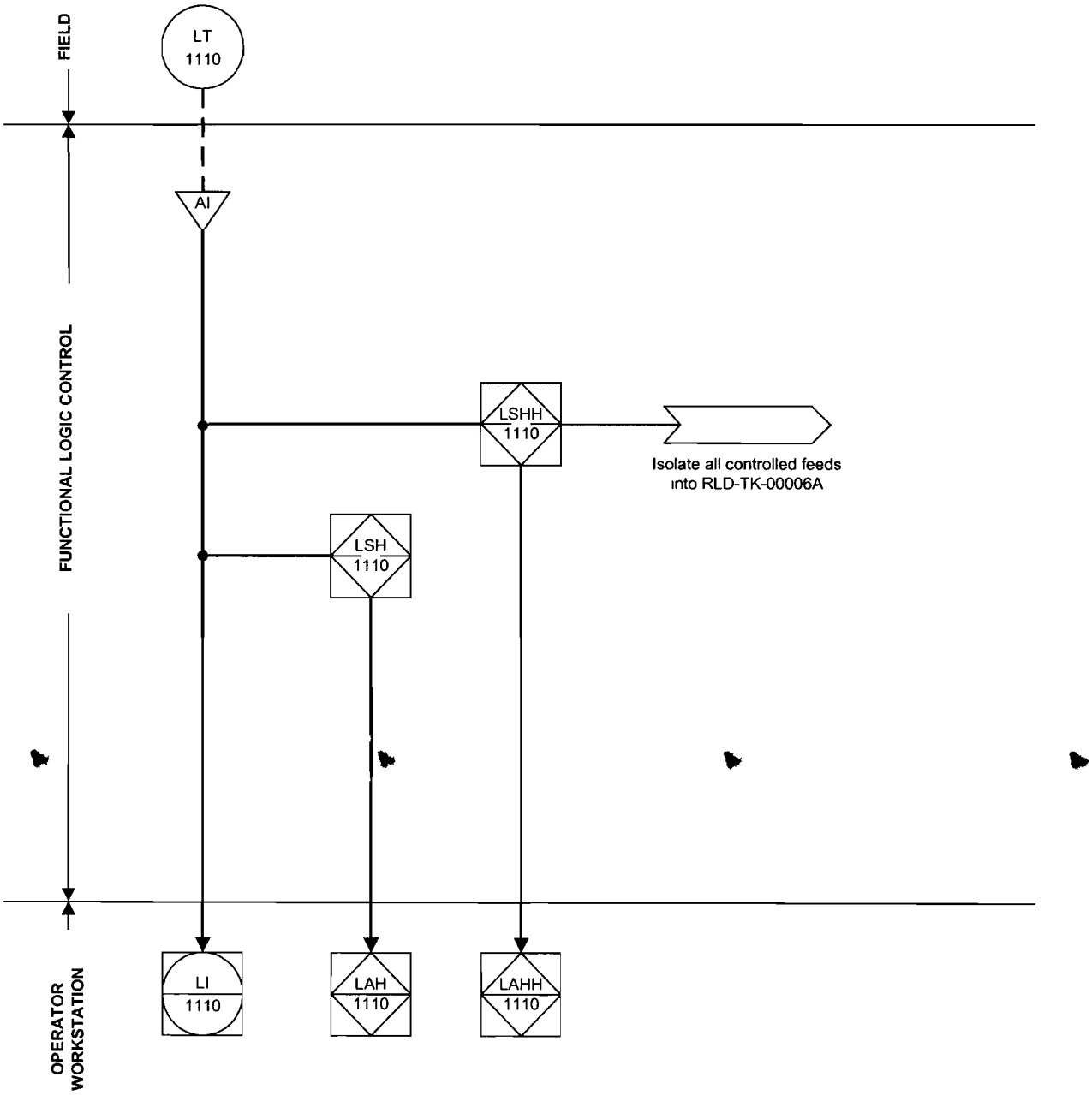

Figure 2 Level Measurement for Process Condensate Tank (RLD-TK-00006B)

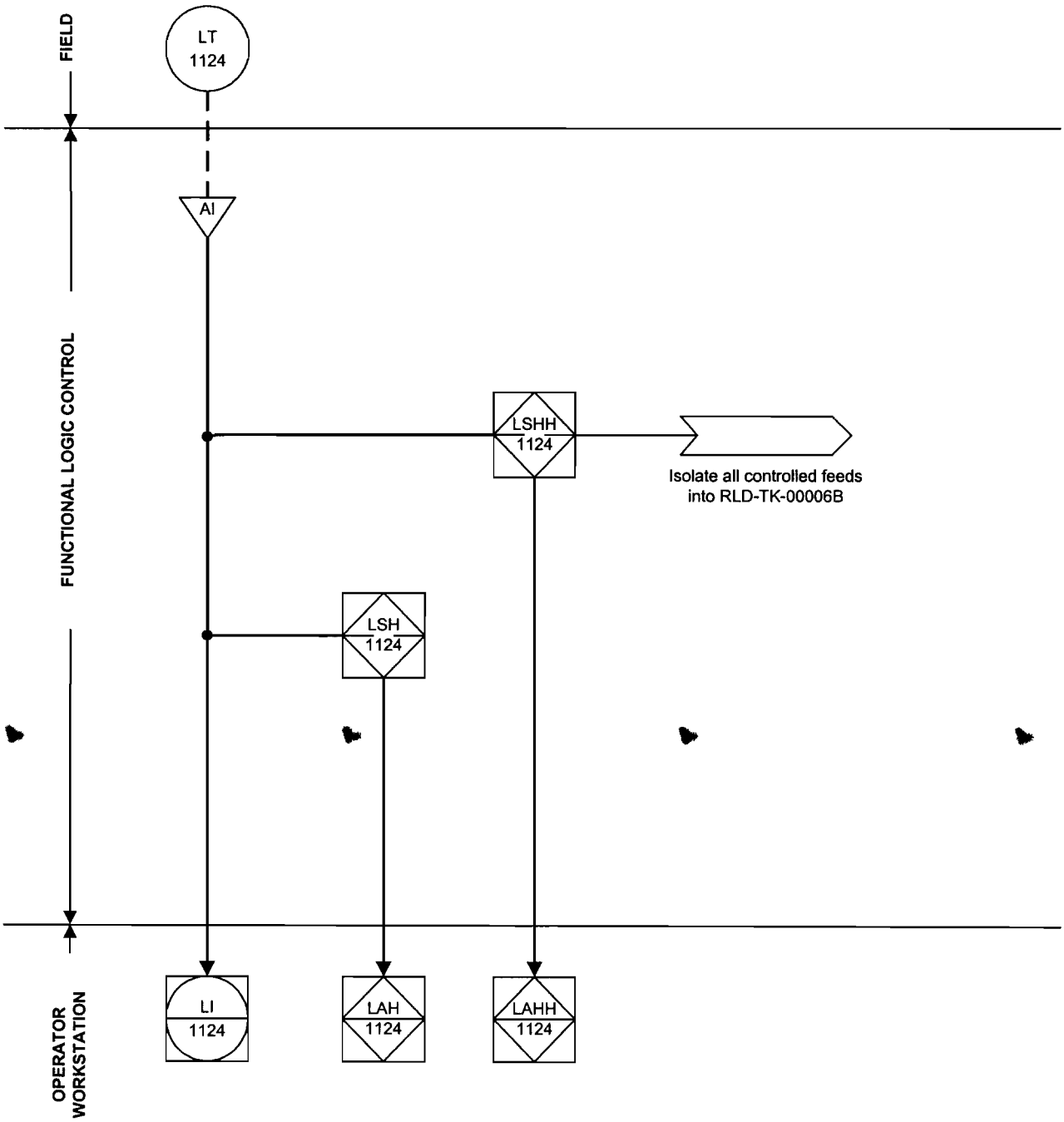

Figure 3 **Level Measurement for Alkaline Effluent Vessel (RLD-VSL-00017A)**

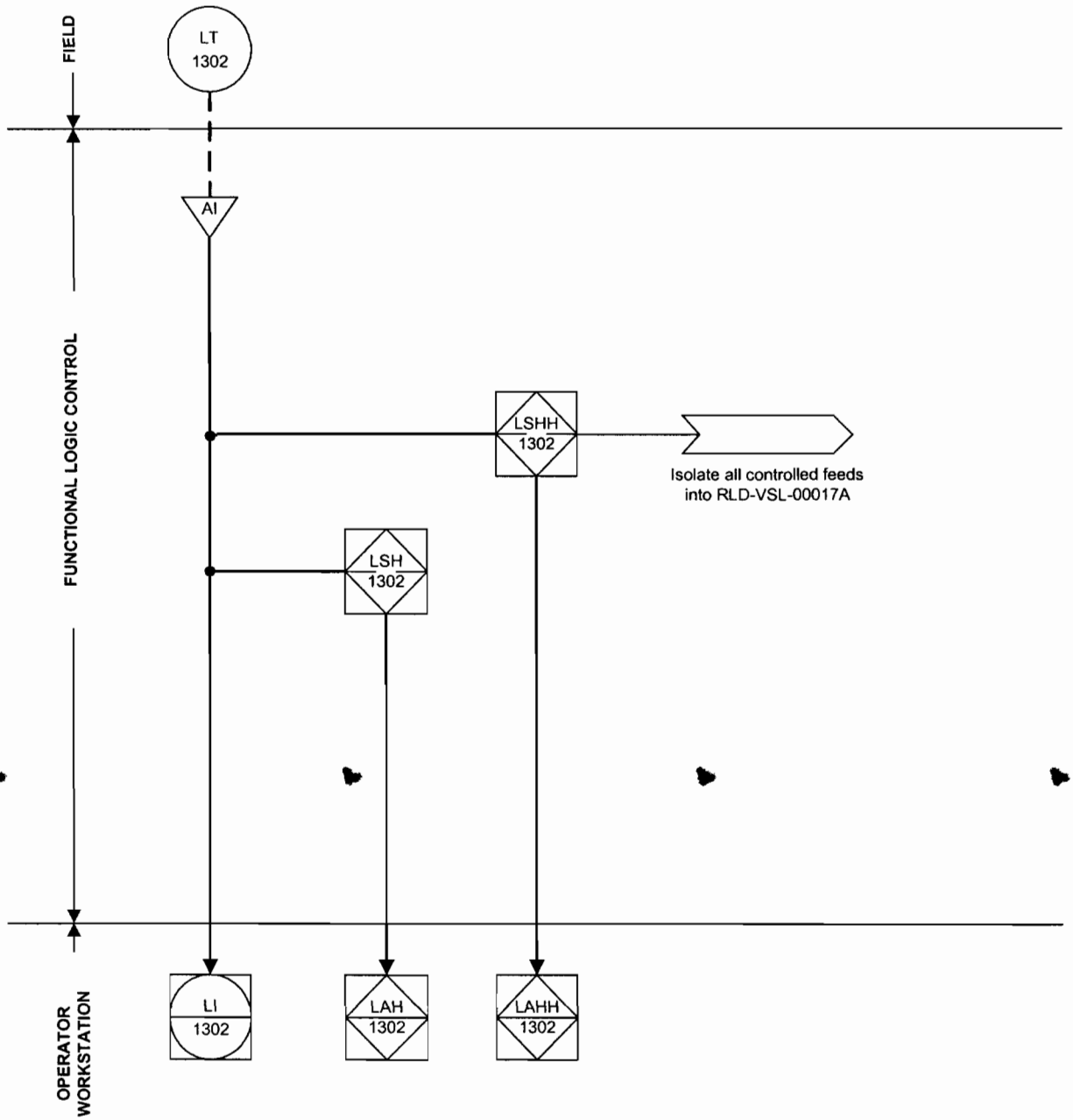

Figure 4 Level Measurement for Alkaline Effluent Vessel (RLD-VSL-00017B)

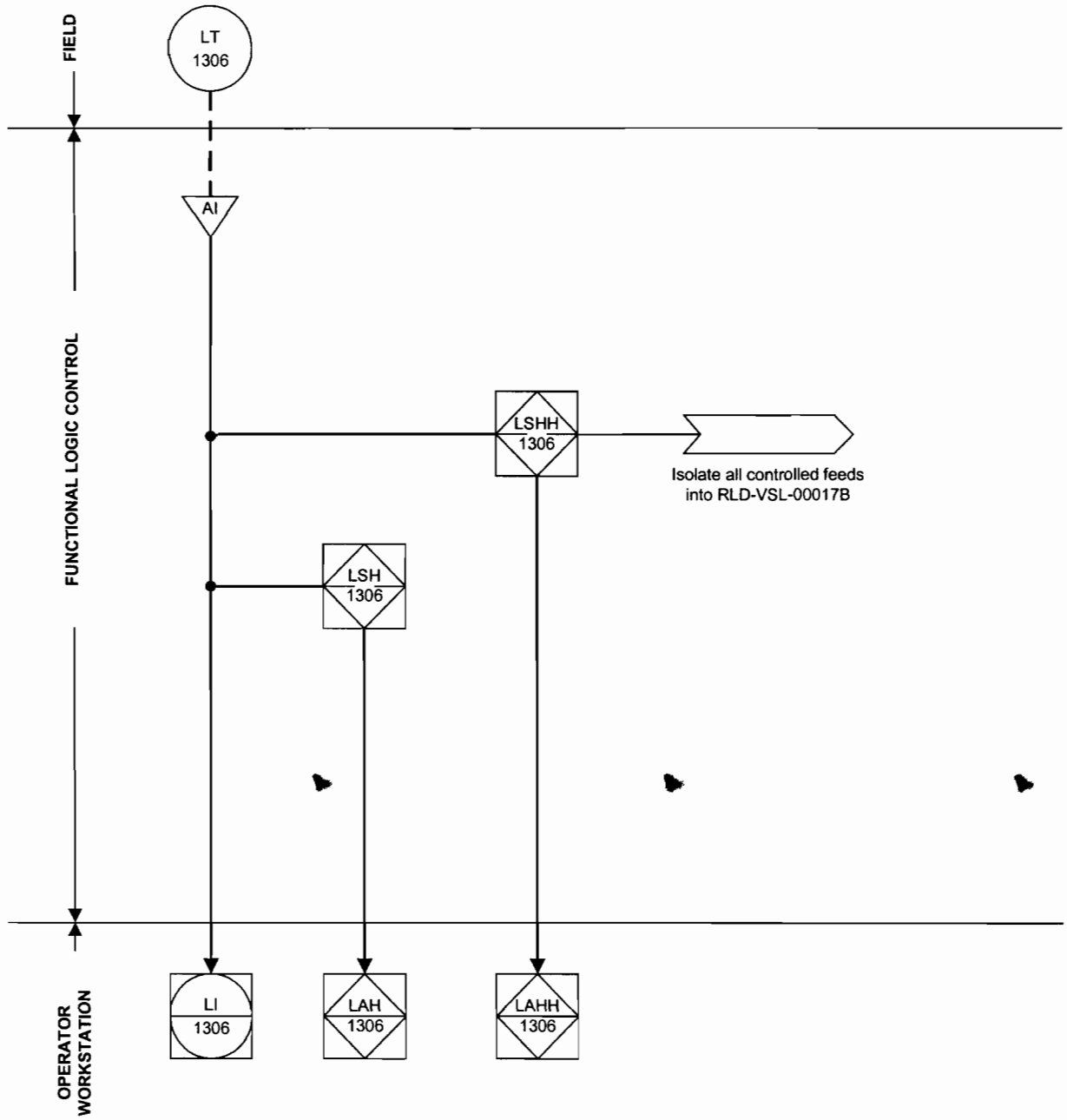

Figure 5 Level Measurement for Area Sump (RLD-SUMP-00003)

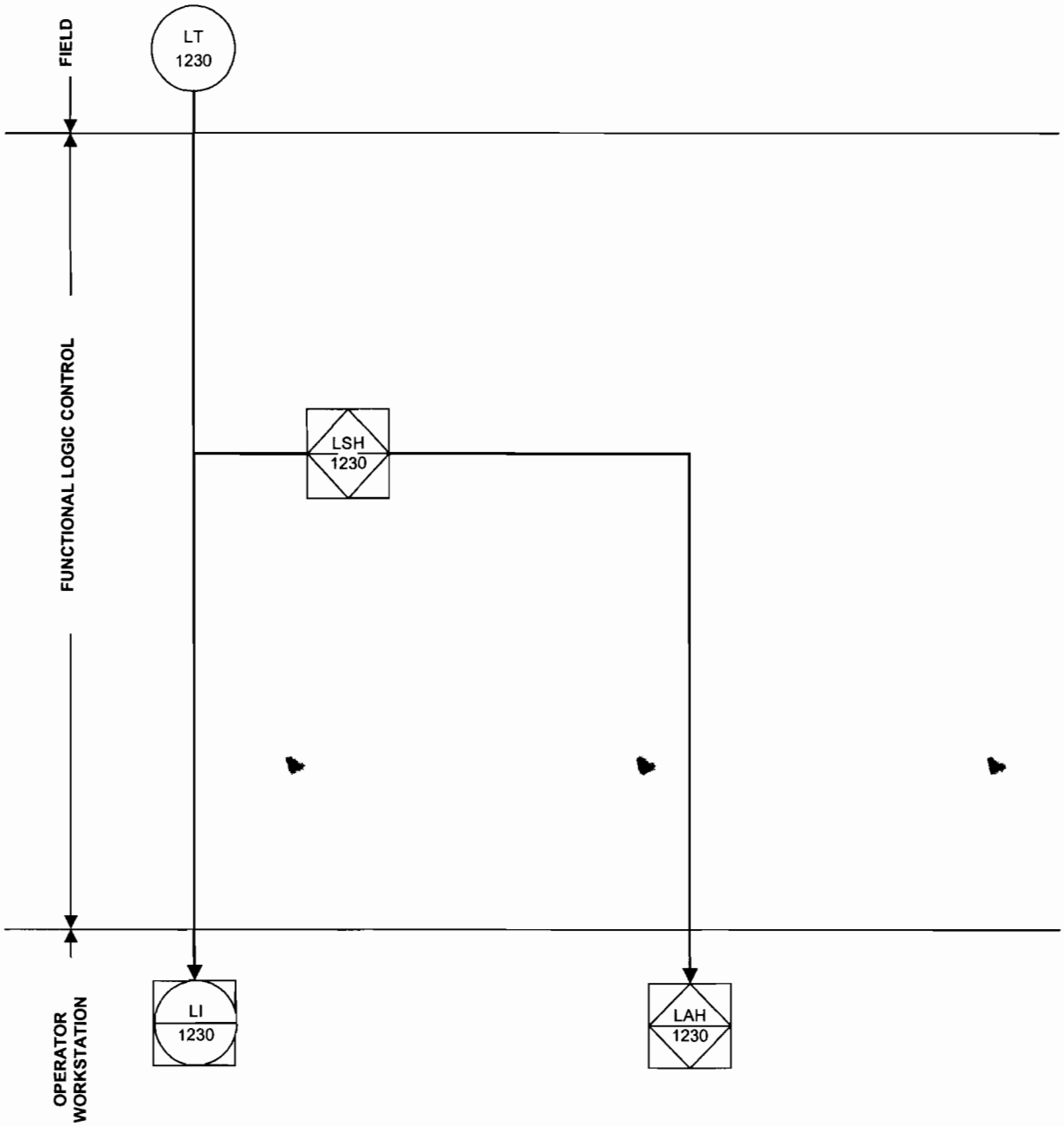

ISSUED BY
RPP-WTP PDC

R10383028

Document title: **System Logic Description for Pretreatment Facility Pulse Jet Ventilation System**

Contract number: DE-AC27-01RV14136

Department: Controls and Instrumentation

Author(s): A.M. "Bill" Jaleel

Principal author signature:

Document number: 24590-PTF-PER-J-03-002, Rev 0

Checked by: Maynardo Eugenio

Checker signature:

Date of issue: 16 September 2004

Issue status: Issued for Permitting Use

Approved by: S Anderson

Approver's position: C&I Engineering Manager

Approver signature: S. E. Anderson

STEPHEN E. ANDERSON
STATE OF WASHINGTON
39176
REGISTERED
PROFESSIONAL ENGINEER
9/17/04
EXPIRES: 5-5-05

This bound document contains a total of 15 sheets

River Protection Project
Waste Treatment Plant
2435 Stevens Center Place
Richland, WA 99352
United States of America
Tel: 509 371 2000

Notice

Please note that source, special nuclear, and byproduct materials, as defined in the Atomic Energy Act of 1954 (AEA), are regulated at the US Department of Energy (DOE) facilities exclusively by DOE acting pursuant to its AEA authority. DOE asserts, that pursuant to the AEA, it has sole and exclusive responsibility and authority to regulate source, special nuclear, and byproduct materials at DOE-owned nuclear facilities. Information contained herein on radionuclides is provided for process description purposes only.

History Sheet

Rev	Date	Reason for revision	Revised by
0	16 September 2004	Issued for Permitting Use	BMJ

Contents

Notice ii

History Sheet iii

Acronyms and Abbreviations v

Glossary vi

1 Introduction 1

2 Applicable Documents 1

3 Description 1

3.1 Pulse Jet Ventilation Demisters PJV-DMST-00002A, PJV-DMST-00002B, PJV-DMST-00002C 1

3.2 Pulse Jet Ventilation Drain Collection Vessel, PJV-VSL-00002 2

3.3 Pulse Jet Ventilation Drain Pump Bulge (PJV-BULGE-00001) 3

3.4 Other Miscellaneous Treatment Units 3

Figures

Figure 1 Level Measurement for Pulse Jet Ventilation Demister (PJV-DMST-00002A) 4

Figure 2 Level Measurement for Pulse Jet Ventilation Demister (PJV-DMST-00002B) 5

Figure 3 Level Measurement for Pulse Jet Ventilation Demister (PJV-DMST-00002C) 6

Figure 4 Level Measurement for the Pulse Jet Ventilation Drain Collection Vessel (PJV-VSL-00002) 7

Figure 5 Level Measurement for the Pulse Jet Ventilation Drain Pump Bulge (PJV-BULGE-00001) 8

Acronyms and Abbreviations

DOE	US Department of Energy
HLW	High Level Waste
LAH	Level Alarm High
LAHH	Level Alarm High-High
LAL	Level Alarm Low
LALL	Level Alarm Low-Low
LI	Level Indication
LOL	lower operating limit
LSH	Level Switch High
LSHH	Level Switch High-High
LSL	Level Switch Low
LSLL	Level Switch Low-Low
LT	Level Transmitter
P&ID	piping and instrumentation diagram
PCS	process control system
PJV	Pulse Jet Ventilation System
PT	pretreatment
PWD	Plant Wash and Disposal System
RLD	Radioactive Liquid Disposal System
TFC	tank farm contractor
UOL	upper operating limit
WTP	River Protection Project - Waste Treatment Plant

Glossary

acquire	Acquire is a command under a batch control that reserves a group of equipment for that particular batch control operation.
actual volume	Actual volume is the amount, in US gallons, of waste or process fluid in any vessel.
available space	Available space refers to the volume, in US gallons, of waste or process fluid that any vessel can accommodate and remain below the upper operating limit (UOL). Available space can be calculated as follows: *Available Space = UOL − Actual Volume*
available volume	Available volume refers to the volume, in US gallons, of waste or process fluid that any vessel can transfer to another vessel and remain above the lower operating limit (LOL). Available volume can be calculated as follows: *Available Volume = Actual Volume − LOL*
batch	This refers to material that is being produced or that has been produced by a single execution of a batch process.
batch control	This term refers to control activities and control functions that provide an ordered set of processing activities to complete a batch process.
batch process	A batch process leads to the production of a finite quantity of material by subjecting quantities of input material to an ordered set of processing activities over a finite period of time using one or more pieces of equipment.
control system	This term refers to electronic processors that perform regulatory and logic control functions necessary for normal operation of the plant.
exception handling	This term refers to those functions that deal with plant or process contingencies and other events that occur outside the normal or desired behavior of batch control.
intermediate products	These are treated high-level waste (HLW) products that are staged and blended in the pretreatment (PT) facility prior to immobilization in the HLW vitrification facility. These products include treated solids slurry, strontium and transuranic elements (Sr/TRU) precipitate slurry and cesium concentrate.
LOL	Lower operating limit- a vessel low level set point used to stop a transfer-out batch operation from that vessel under normal plant operations.
permissive	A permissive is an interlock that allows a device to change state or a sequence to start. Once a device has changed state or a sequence has started, a permissive has no further effect on the device or sequence.
release	Release is a command under a batch control that opens up a group of equipment for any batch control to acquire.
requested volume	The requested volume is the volume, in US gallons, of waste or process fluid that can be delivered to the destination vessel and the total volume will remain below the vessel's upper operating level.

Sr/TRU precipitate	For envelope C feed, the strontium and transuranic elements are precipitated out of solution and separated from the supernate along with any entrained solids to produce the slurry.
trip	A trip is an interlock that does not allow a device to change state or a sequence to start. Once a device has changed state or a sequence has started, a trip continues to have an effect on the device or sequence.
UOL	Upper operating limit – A vessel high level setpoint used to stop a transfer-in batch operation to that vessel under normal plant operation.

1 Introduction

This document describes the control logic associated with vessel instrumentation and other ancillary equipment within the pulse jet ventilation system in the pretreatment (PT) facility that function to prevent inadvertent overflows within this system through the control system.

2 Applicable Documents

24590-WTP-M6-50-P0001, *P&ID Symbols and Legend Sheet 1 of 6.*

24590-WTP-M6-50-P0002, *P&ID Symbols and Legend Sheet 2 of 6.*

24590-WTP-M6-50-P0003, *P&ID Symbols and Legend Sheet 3 of 6.*

24590-WTP-M6-50-P0004, *P&ID Symbols and Legend Sheet 4 of 6.*

24590-WTP-M6-50-P0005, *P&ID Symbols and Legend Sheet 5 of 6.*

24590-WTP-M6-50-P0006, *P&ID Symbols and Legend Sheet 6 of 6.*

24590-PTF-M6-PJV-P0002, *P&ID-PTF Pulse Jet Ventilation System Inlet Header to Demister Outlet*

24590-PTF-3YD-PJV-00001, System Description for PTF Pulse Jet Ventilation System, (PJV)

3 Description

The following plant items and associated ancillary equipment are associated with dangerous waste management within the PJV system as a part of the PT facility.

Pulse Jet Ventilation Demisters (PJV-DMST-00002A/B/C)
Pulse Jet Ventilation Drain Collection Vessel (PJV-VSL-00002)
Pulse Jet Ventilation Drain Pump Bulge (PJV-BULGE-00001)
Pulse Jet Ventilation Primary HEPA Filters (PJV-HEPA-00001A/B/C/D/E/F/G)
Pulse Jet Ventilation Secondary HEPA Filters (PJV-HEPA-00002A/B/C/D/E/F)
Pulse Jet Ventilation Drain Transfer Pumps (PJV-PMP-00001A/B)
PJV Exhaust Fans (PJV-FAN-00001A/B/C)

3.1 Pulse Jet Ventilation Demisters PJV-DMST-00002A, PJV-DMST-00002B, PJV-DMST-00002C

RFD and PJM exhaust gas stream from various pretreatment vessels will flow via several sub-headers to a main header to the demisters for removal of sub-micron fine aerosols and mist to adequately protect the downstream HEPA filters from excessive activity build up. There will be three 50% capacity demisters, of which two are in service and one is available as standby. Demisters are passive devices and can be put in

service or isolated from the process by opening or closing the isolation valve provided at the inlet of each demister.

Demisters will be washed periodically with demineralized water. Process Condensate from the sub headers and the washings from demisters will flow into the demister drain collection vessel (PJV-VSL-00002). During normal operation, the level in the demisters is continuously monitored by the control system. If the level reaches a predetermined high set point due to abnormality such as a clog in the drain line, interlocks and alarms within the control system stop the demineralized water supply to the demisters. Alternatively, demineralized water supply can be stopped manually at the discretion of the operator.

Refer to Figure 1, 2 and 3 for level measurement details for the demisters.

3.2 Pulse Jet Ventilation Drain Collection Vessel, PJV-VSL-00002

When the demisters are operating, the demister drain collection vessel (PJV-VSL-00002) will continuously receive and store any liquid collected from the demisters. It will also receive any liquid collected from the low points in the PJV header or any flush solution (primarily process condensate from system RLD) from the header should the header require flushing. This vessel can also receive process condensate directly from system RLD to ensure a minimum level is maintained. When the level reaches a predetermined setpoint, a portion of the solution is transferred to the plant wash vessel (PWD-VSL-00044) in the plant wash and disposal system (PWD). While stored, the liquid solution is continuously recycled to provide adequate mixing and avoid settling of solids.

Under normal conditions, the level in the drain collection vessel (PJV-VSL-00002) is continuously monitored and maintained by the control system within the normal operating range by transferring excess of the liquid solution to the plant wash vessel (PWD-VSL-00044) in the plant wash and disposal system (PWD).

The drain collection vessel (PJV-VSL-00002) transfers are controlled by the control system and limited by the batch control mechanism of acquiring and releasing of the plant wash vessel in system PWD. The acquire and release commands ensure that the entities involved in this batch transfer cannot transfer in or out from multiple destinations at the same time. Once the drain collection vessel (PJV-VSL-00002) is ready to transfer, the operator will initiate a transfer-out sequence within the control system. Once initiated, the control system verifies that instruments, utilities, and equipment associated with the transfer are within operational parameters and remain as such throughout the transfer. If any of the monitored parameters are not within the specified limits during the transfer, the control system will switch to exception handling logic. Under normal operating conditions the sequence will end if any of the following becomes true:

- The level in the plant wash vessel (PWD-VSL-00044) reaches its upper operating limit (UOL).
- The specified volume is transferred.
- The level in the drain collection vessel (PJV-VSL-00002) reaches its lower operating limit (LOL).

When the level in the drain collection vessel (PJV-VSL-00002) is no longer within the normal operating range due to abnormality, low level interlocks along with alarms within the control system will stop the moving force. Overflow conditions will be prevented administratively by the operator upon receiving a High level alarm. If the level continuous to increase beyond the high level setpoint, The control system will automatically stop all incoming feeds into vessel (PJV-VSL-00002) via a high high interlock.

Refer to Figure 4 for level measurement details for the drain collection vessel (PJV-VSL-00002).

3.3 Pulse Jet Ventilation Drain Pump Bulge (PJV-BULGE-00001)

The PJV bulge (PJV-BULGE-00001) is maintained dry. Upon detection of a high liquid level in the bulge, the control system alarms and the operator must take the necessary action to empty the bulge. Figure 5 shows the high alarm for the level instrument associated with the PJV bulge (PJV-BULGE-00001).

3.4 Other Miscellaneous Treatment Units

(Pending design evolution of the Pretreatment Pulse Jet Ventilation (PJV) Systems).

Figure 1 **Level Measurement for Pulse Jet Ventilation Demister (PJV-DMST-00002A)**

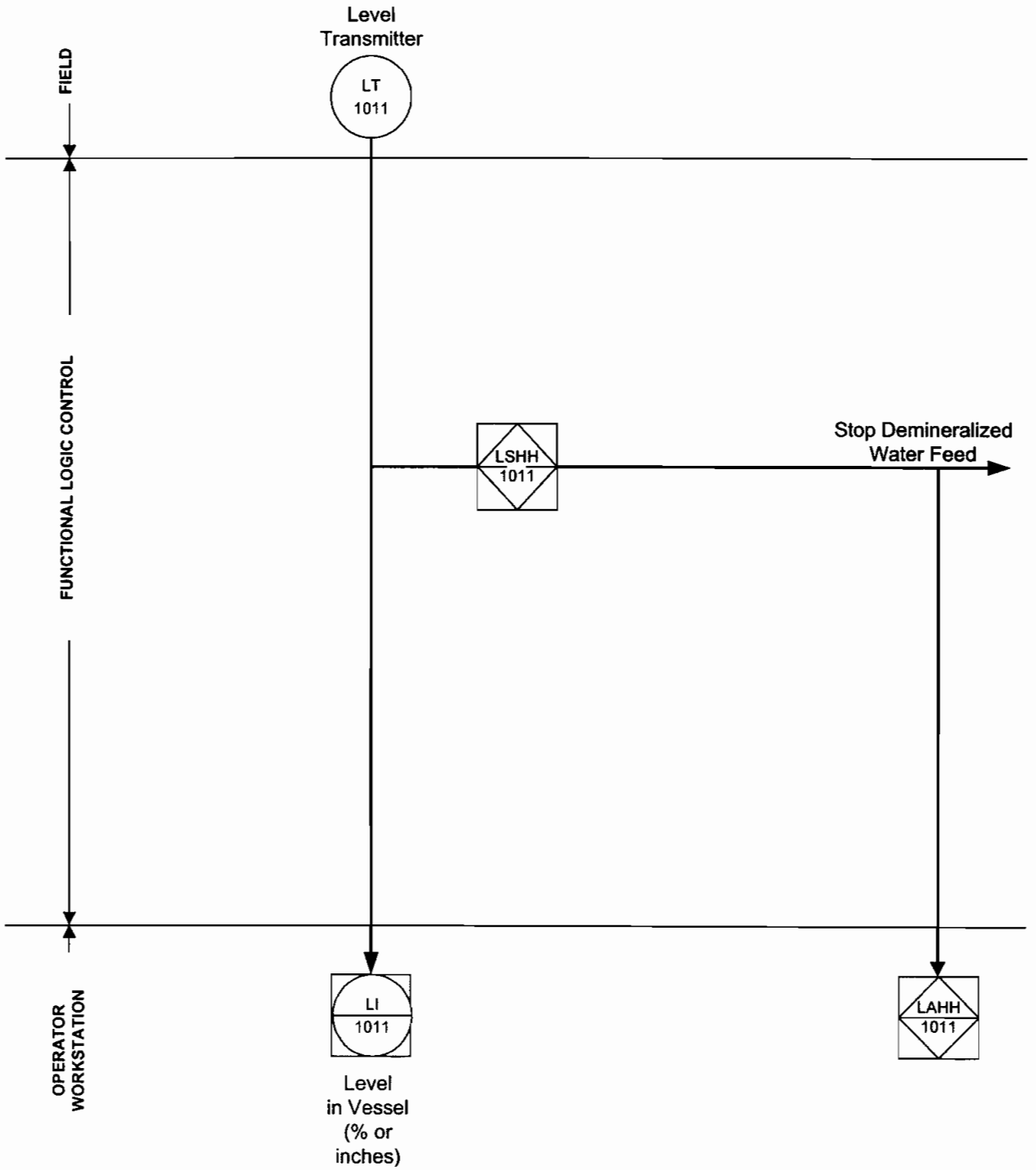

Figure 2 **Level Measurement for Pulse Jet Ventilation Demister (PJV-DMST-00002B)**

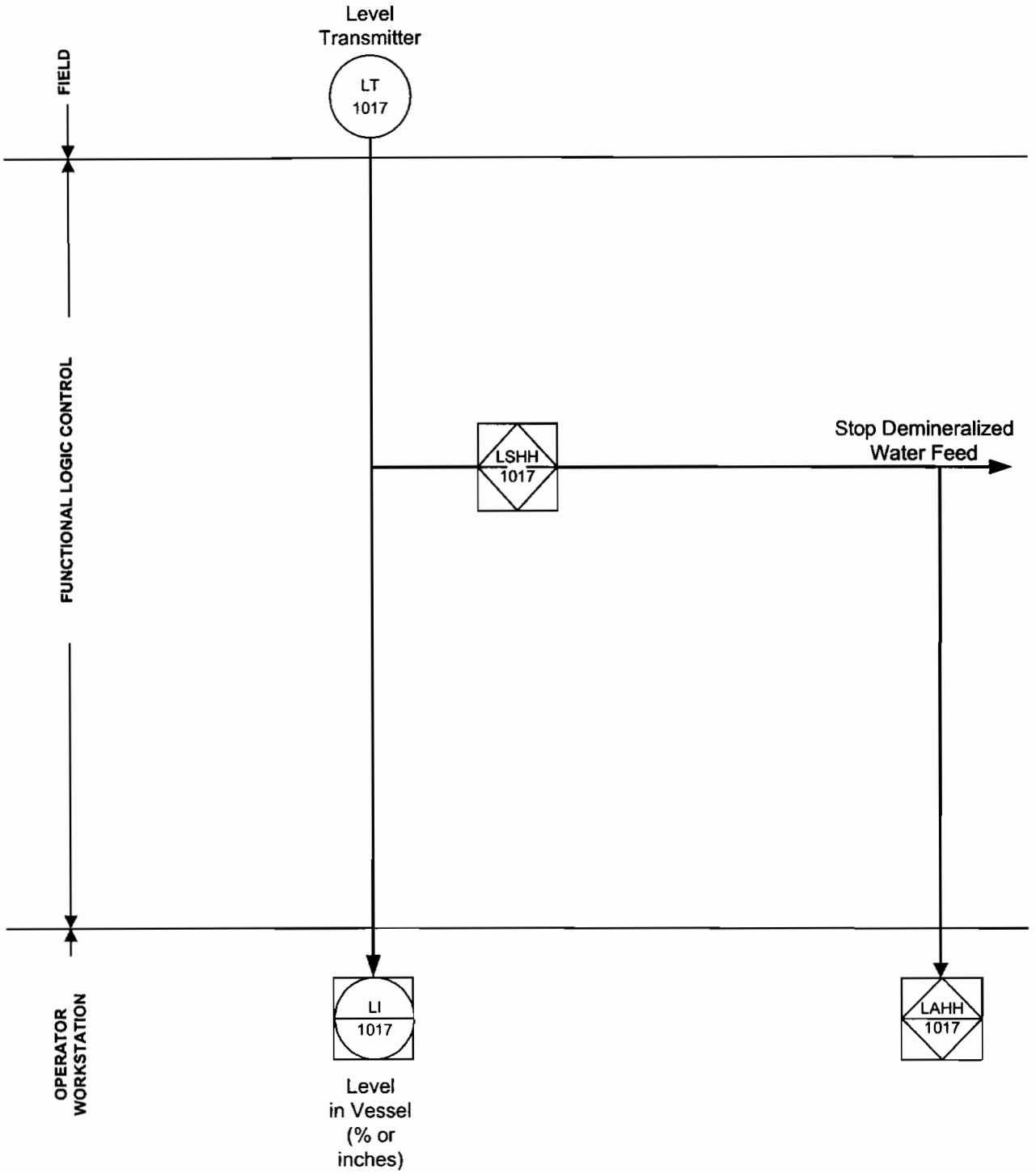

Figure 3 Level Measurement for Pulse Jet Ventilation Demister (PJV-DMST-00002C)

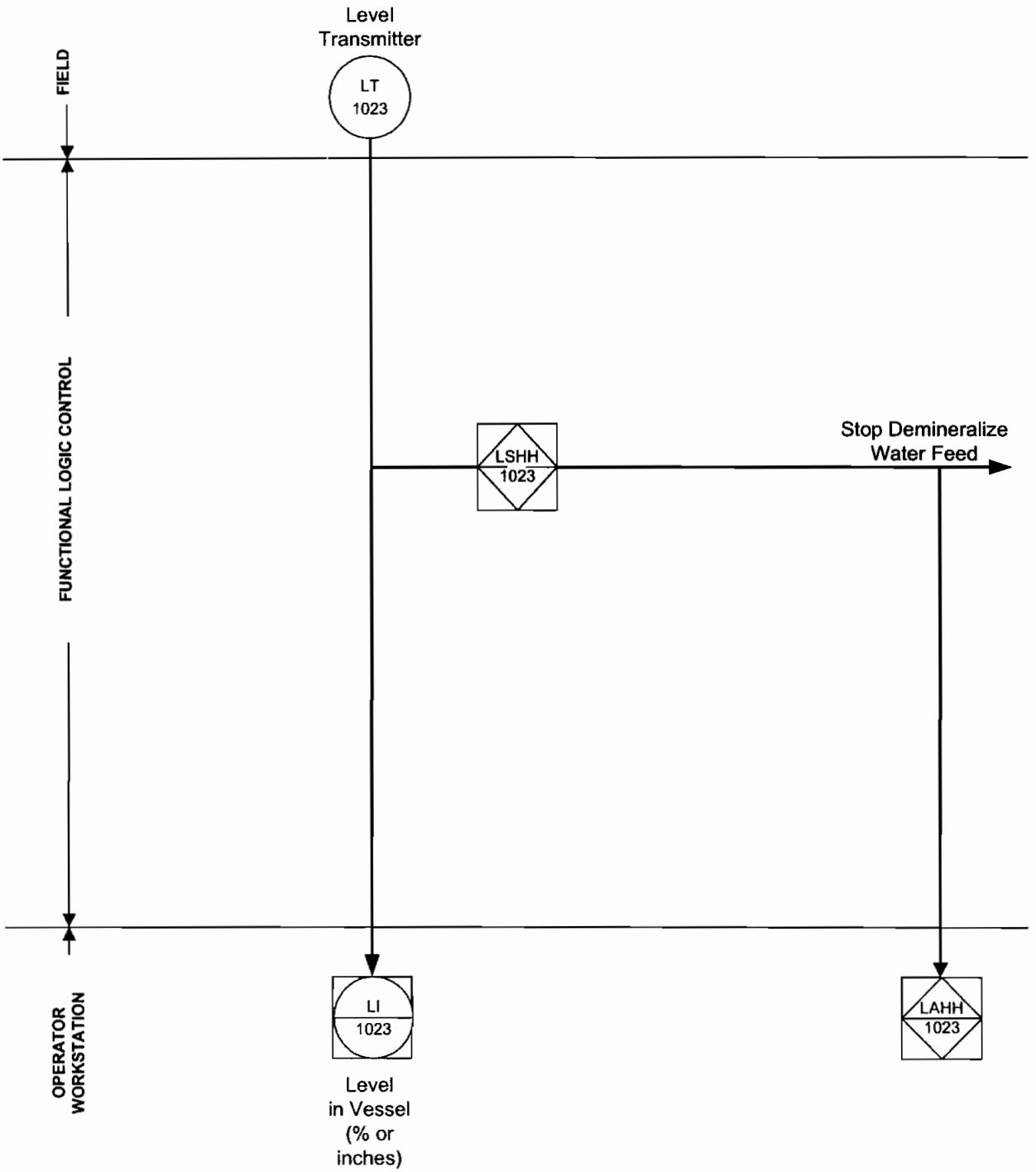

Figure 4 **Level Measurement for the Pulse Jet Ventilation Drain Collection Vessel (PJV-VSL-00002)**

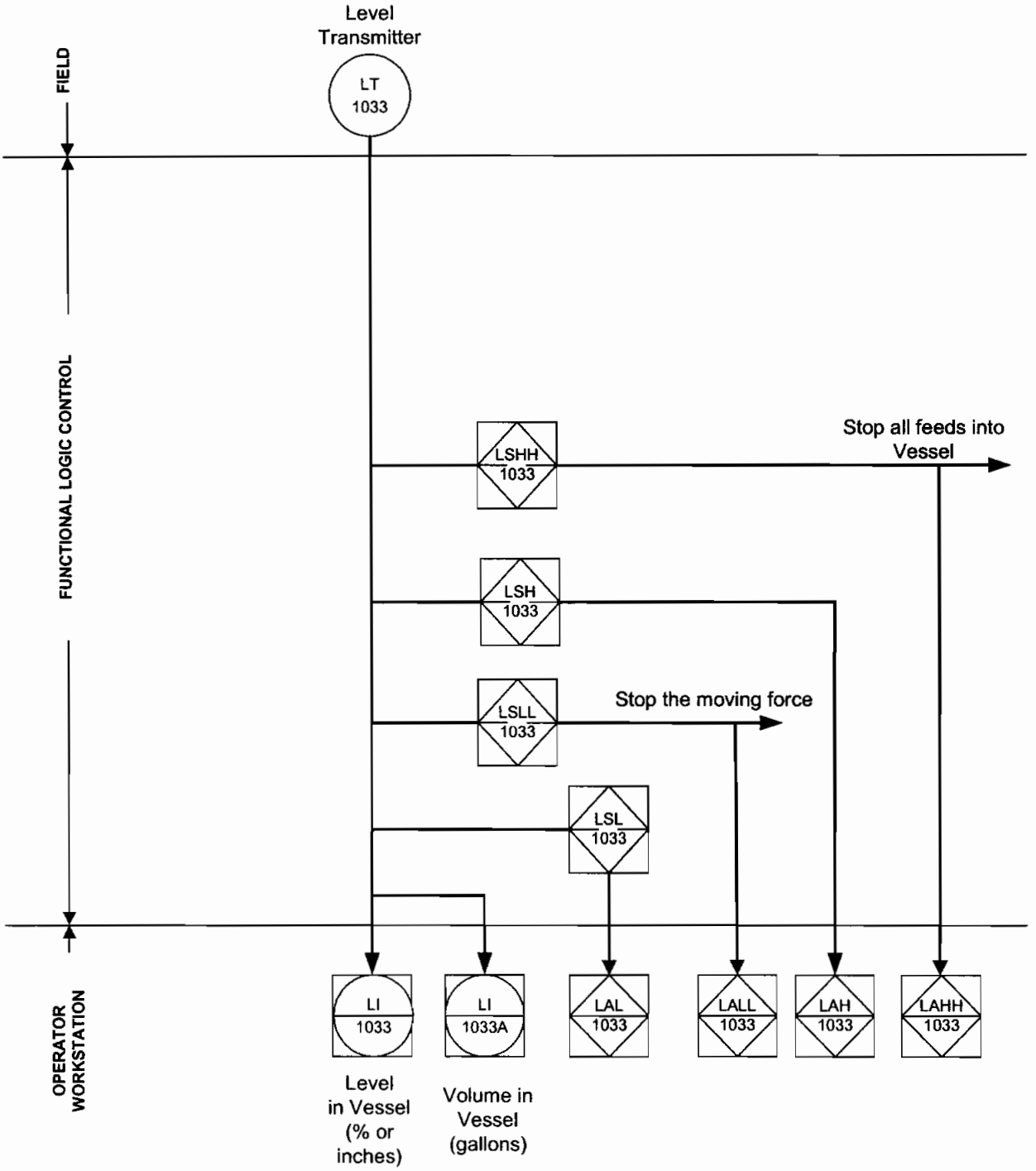

Figure 5 Level Measurement for the Pulse Jet Ventilation Drain Pump Bulge (PJV-BULGE-00001)

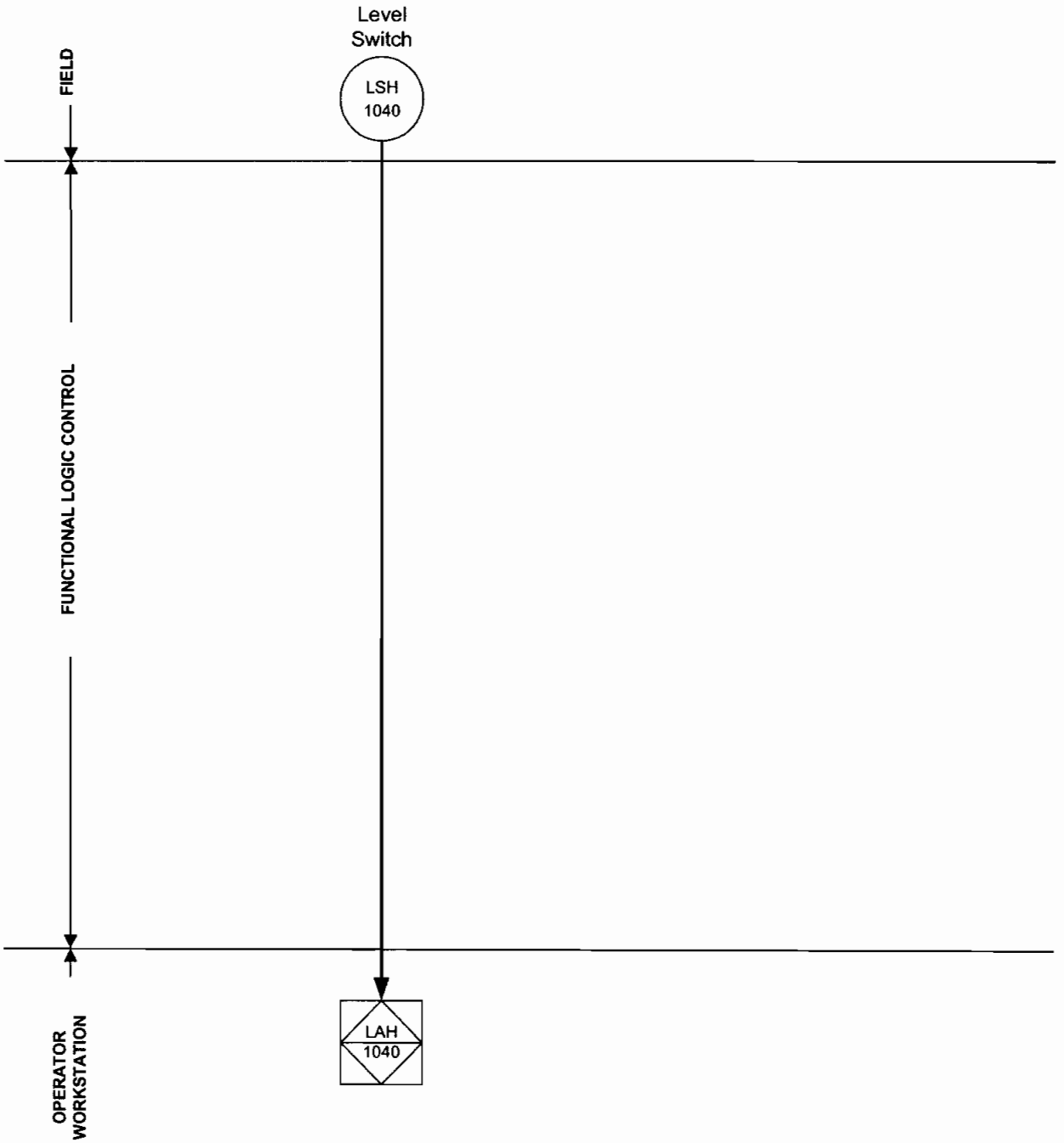

RL0204013

Document title: **System Logic Description for Pretreatment Facility Plant Wash and Disposal**

Contract number: DE-AC27-01RV14136

Department: Controls and Instrumentation

Author(s): M Daggett M Friedrich

ISSUED BY RPP-WTP PDC INIT DATE

Principal author signature: Matt Daggett Mark Friedrich

Document number: 24590-PTF-PER-J-03-004, Rev 0

Checked by: K Herman

Checker signature:

Date of issue: 2-12-04

Issue status: Issued for Permitting Use

Approved by: S Anderson

Approver's position: C&I Engineering Manager

Approver signature:

MARK A. FRIEDRICH STATE OF WASHINGTON 32426 REGISTERED PROFESSIONAL ENGINEER

2-12-04

EXPIRES 03/31/04

This bound document contains a total of 22 sheets

River Protection Project
Waste Treatment Plant
2435 Stevens Center Place
Richland, WA 99352
United States of America
Tel: 509 371 2000

Notice

Please note that source, special nuclear, and byproduct materials, as defined in the Atomic Energy Act of 1954 (AEA), are regulated at the US Department of Energy (DOE) facilities exclusively by DOE acting pursuant to its AEA authority. DOE asserts that pursuant to the AEA, it has sole and exclusive responsibility and authority to regulate source, special nuclear, and byproduct materials at DOE-owned nuclear facilities. Information contained herein on radionuclides is provided for process description purposes only.

History Sheet

Rev	Date	Reason for revision	Revised by
0	2-12-04	Issued for Permitting Use	M Daggett / M Friedrich

Contents

Notice ii
History Sheet iii
Acronyms and Abbreviations v
Glossary vi
1 Introduction 1
2 Applicable Documents 1
3 Description 2
3.1 Ultimate Overflow Vessel (PWD-VSL-00033) 3
3.2 HLW Effluent Transfer Vessel (PWD-VSL-00043) 4
3.3 C3 Floor Drain Collection Vessel (PWD-VSL-00046) 4
3.4 Plant Wash Vessel (PWD-VSL-00044) 5
3.5 Acidic/Alkaline Effluent Vessel (PWD-VSL-00015) 6
3.6 Acidic/Alkaline Effluent Vessel (PWD-VSL-00016) 7
3.7 All PT PWD Facility Sumps 8
3.8 Leak Detection Boxes 8

Figures

Figure 1. Level Measurement for the Ultimate Overflow Vessel (PWD-VSL-00033) 9
Figure 2. Level Measurement for the HLW Effluent Transfer Vessel (PWD-VSL-00043) 10
Figure 3. Level Measurement for the C3 Floor Drain Collection Vessel (PWD-VSL-00046) 11
Figure 4. Level Measurement for Plant Wash Vessel (PWD-VSL-00044) 12
Figure 5. Level Measurement for Acidic/Alkaline Effluent Vessel (PWD-VSL-00015) 13
Figure 6. Level Measurement for Acidic/Alkaline Effluent Vessel (PWD-VSL-00016) 14
Figure 7. Level Measurement for Feed Receipt C5 Cell Sump (PWD-SUMP-00001) 15
Figure 8. Level Measurement for Leak Detection Box (PWD-LDB-00001) 16

Acronyms and Abbreviations

AI	analog input
LAH	level alarm high
LAHH	level alarm high-high
LI	level indication
LKAH	level time alarm high
LKI	level time indication
LKSH	level time switch high
LKY	level time calculation
LOL	lower operating limit
LSH	level switch high
LSHH	level switch high-high
LT	level transmitter
P&ID	piping and instrumentation diagram
PT	pretreatment
PWD	plant wash and disposal
UOL	upper operating limit
WTP	Hanford Waste Tank Treatment and Immobilization Plant

Glossary

acquire	Acquire is a command under a batch control that reserves a group of equipment for that particular batch control operation.
batch	This refers to material that is being produced or that has been produced by a single execution of a batch process.
batch control	This term refers to control activities and control functions that provide an ordered set of processing activities to complete a batch process.
batch process	A batch process leads to the production of a finite quantity of material by subjecting quantities of input material, to an ordered set of processing activities, over a finite period using one or more pieces of equipment.
control system	This term refers to electronic processors that perform regulatory and logic control functions necessary for normal operation of the plant.
exception handling	This term refers to those functions that deal with plant or process contingencies and other events that occur outside the normal or desired behavior of batch control.
interlock	This term refers to a mechanism that automatically brings about or prevents the operation of another mechanism.
LOL	Lower operating limit. A vessel low-level set point used to stop a transfer-out batch operation from that vessel under normal plant operations.
permissive	A permissive is an interlock that allows a device to change state or a sequence to start. Once a device has changed state or a sequence has started, a permissive has no further effect on the device or sequence.
release	Release is a command under a batch control that opens up a group of equipment for any batch control to acquire.
trip	A trip is a conditional interlock that forces a device or a sequence to a defined state. A trip continues to have an effect on the device or sequence until the interlock condition no longer exist.
UOL	Upper operating limit. A vessel high-level setpoint used to stop a transfer-in batch operation to that vessel under normal plant operation.

1 Introduction

This document describes the instrument control logic for tank and ancillary equipment for the plant wash and disposal system (PWD) within the pretreatment (PT) facility that is associated with dangerous waste management. This document describes tank and ancillary equipment for the PWD system within the PT facility.

2 Applicable Documents

24590-WTP-M6-50-P0001, *P&ID Symbols and Legends Sheet 1 of 6.*

24590-WTP-M6-50-P0002, *P&ID Symbols and Legends Sheet 2 of 6.*

24590-WTP-M6-50-P0003, *P&ID Symbols and Legends Sheet 3 of 6.*

24590-WTP-M6-50-P0004, *P&ID Symbols and Legends Sheet 4 of 6.*

24590-WTP-M6-50-P0005, *P&ID Symbols and Legends Sheet 5 of 6.*

24590-WTP-M6-50-P0006, *P&ID Symbols and Legends Sheet 6 of 6.*

24590-PTF-M6-PWD-P0001, *P&ID-PTF Plant Wash and Disposal System Effluent Collection Tree*

24590-PTF-M6-PWD-P0002, *P&ID - PTF Plant Wash & Disposal System Effluent Collection PWD-VSL-00033/00043/00044*

24590-PTF-M6-PWD-P0003, *P&ID - PTF Plant Wash & Disposal System Effluent Collection PWD-VSL-00015 and 00016*

24590-PTF-M6-PWD-P0005, *P&ID-PTF Plant Wash & Disposal System Effluent Collection Headers Drains*

24590-PTF-M6-PWD-P0006, *P&ID-PTF Plant Wash & Disposal System Effluent Collection Headers, Overflows*

24590-PTF-M6-PWD-P0007, *P&ID-PTF Plant Wash & Disposal System Effluent Collection Header Bulge & Rack Drains*

24590-PTF-M6-PWD-P0008, *P&ID - PTF Plant Wash & Disposal System C5/R5 Process Cell Sumps*

24590-PTF-M6-PWD-P0009, *P&ID - PTF Plant Wash & Disposal System C5/R5 Process Cell Sumps*

24590-PTF-M6-PWD-P0010, *P&ID - PTF Plant Wash & Disposal System C3/C5/R5 Process Cell Sumps.*

24590-PTF-M6-PWD-P0011, *P&ID - PTF Plant Wash & Disposal System C3/C5 and C5 Area Floor Drains*

24590-PTF-M6-PWD-P0012, *P&ID - PTF Plant Wash & Disposal System C3/R3 and C5/R5 Cell Sumps*

24590-PTF-M6-PWD-P0014, *P&ID - PTF Plant Wash & Disposal System C5/R5 Hot Cell Sumps.*

24590-PTF-M6-PWD-P0018, *P&ID-PTF Plant Wash and Disposal System Utilities Services-PSA Rack.*

24590-PTF-M6-PWD-P0019, *P&ID-PTF Plant Wash and Disposal System Utilities Services-PSA Rack*

24590-PTF-M6-PWD-P0020, *P&ID-PTF Plant Wash and Disposal System Utilities Services-PSA Rack*

24590-PTF-M6-PWD-P0021, *P&ID-PTF Plant Wash and Disposal System Utilities Services-PSA Rack*

24590-PTF-M6-PWD-P0023, *P&ID-PTF Plant Wash and Disposal System Utilities Services-PSA Rack*

24590-PTF-M6-PWD-P0024, *P&ID-PTF Plant Wash and Disposal System Utilities Services-PSA Rack*

24590-PTF-M6-PWD-P0025, *P&ID-PTF Plant Wash and Disposal System Utilities Services-PSA Rack*

24590-PTF-M6-PWD-P0026, *P&ID-PTF Plant Wash and Disposal System Utilities Service-Plant Wash Rack*

24590-PTF-M6-PWD-P0029, *P&ID-PTF Plant Wash and Disposal System Utilities Services-Plant Wash Rack*

24590-PTF-M6-PWD-P0033, *P&ID-PTF Plant Wash and Disposal System Utilities Services-Plant Wash Rack*

24590-PTF-M6-PWD-P0034, *P&ID-PTF Plant Wash and Disposal System Utilities Services-Plant Wash Rack*

24590-PTF-M6-PWD-P0041, *P&ID-PTF Plant Wash and Disposal System C2 Area Floor Drains Collection Vessel.*

24590-PTF-M6-PWD-P0043, *P&ID-PTF Plant Wash and Disposal System C3 Area Floor Drains.*

24590-PTF-M6-PWD-P0044, *P&ID-PTF Plant Wash and Disposal System C3 Area Floor Drains*

24590-PTF-M6-PWD-P0046, *P&ID-PTF Plant Wash & Disposal Utility Services Plant Wash Rack*

24590-PTF-M6-PWD-P0050, *P&ID-PTF Plant Wash & Disposal System Secondary Containment Leak Detection System*

24590-PTF-M6-PWD-P0051, *P&ID-PTF Plant Wash & Disposal System Secondary Containment Leak Detection System*

3 Description

The following tank and ancillary equipment are associated with dangerous waste management within the PWD system, which resides in the PT facility.

- Ultimate overflow vessel (PWD-VSL-00033)
- HLW effluent transfer vessel (PWD-VSL-00043)

- C3 floor drain collection vessel (PWD-VSL-00046)
- plant wash vessel (PWD-VSL-00044)
- acidic/alkaline effluent vessel (PWD-VSL-00015)
- acidic/alkaline effluent vessel (PWD-VSL-00016)
- all PWD PT facility sumps
- all PT facility leak detection boxes

3.1 Ultimate Overflow Vessel (PWD-VSL-00033)

The ultimate overflow vessel (PWD-VSL-00033) receives effluent from vessel overflows, drains, and the −45 ft sump (PWD-SUMP-00040) and then transfers it to the plant wash vessel (PWD-VSL-00044). For greater waste management reliability, the ultimate overflow vessel (PWD-VSL-00033) controlled transfers are limited by the control system to one transfer in or out at a time, by the batch control mechanism of acquiring and releasing. Drains and overflows are not considered controlled flows.

When the vessel is available to receive effluent, the operator will initiate the transfer-in sequence. Once the sequence is initiated, the control system will verify that instruments, utilities, and equipment associated with the transfer are within operational parameters. If any of the monitored parameters are not within the specified limits during the transfer, the control system will switch to exception handling logic. The ultimate overflow vessel (PWD-VSL-00033) is monitored by a rate of level change, calculated by the control system, in order to detect leaks and overflows. When transferring in, the rate of change alarm setpoint will be changed by the control system to prevent the alarm from occurring due to the expected level change from the transfer. The transfer is stopped by the control system when any of the following are true:

- The level in the ultimate overflow vessel (PWD-VSL-00033) reaches its upper operating limit (UOL)
- The level in the sending entity reaches its lower operating limit (LOL)
- A specified volume is transferred, based upon vessel level.

Once the transfer is stopped, the control system resets the rate of change alarm setpoint to its non-transferring value.

Once the ultimate overflow vessel (PWD-VSL-00033) is ready to transfer out, the operator will initiate the transfer-out sequence within the control system. Once initiated, the control system verifies that all instruments, utilities, and equipment associated with the transfer are within operational parameters. If any of the monitored parameters are not within the specified limits during the transfer, the control system will switch to exception handling logic. The transfer is stopped by the control system when any of the following are true:

- The level in the ultimate overflow vessel (PWD-VSL-00033) reaches its LOL
- The plant wash vessel (PWD-VSL-00044) reaches its UOL.
- A specified volume is transferred, based upon vessel level

When the level is no longer within the normal operating range, due to an abnormality, interlocks along with alarms within the control system help prevent an overflow condition. Figure 1 shows the interlocks

and alarms for the level instrument associated with the ultimate overflow vessel (PWD-VSL-00033). The level instrument monitors the level and rate of level change within the ultimate overflow vessel (PWD-VSL-00033). If the rate of level change is greater than a predetermined setpoint, an alarm is generated. Upon reaching the high-alarm level setpoint, the control system generates a high alarm. Upon reaching the high-high setpoint, an alarm is generated and all controlled feeds into the ultimate overflow vessel (PWD-VSL-00033) are isolated. Isolation occurs by a combination of either stopping the motive force or closing valves by the control system.

3.2 HLW Effluent Transfer Vessel (PWD-VSL-00043)

The HLW effluent transfer vessel (PWD-VSL-00043) receives effluent from the high level waste vitrification facility (HLW) radioactive liquid waste disposal system, drains, and the –45 ft sump (PWD-SUMP-00040), and then transfers it to the plant wash vessel (PWD-VSL-00044). For greater waste management reliability, controlled transfers into the HLW effluent transfer vessel (PWD-VSL-00043) are limited by the control system to one transfer in or out at a time, by the batch mechanism of acquiring and releasing. Drains and overflows are not considered controlled flows.

When the vessel is available to receive effluent, the operator will initiate the transfer-in sequence. Once the sequence is initiated, the control system will verify that instruments, utilities, and equipment associated with the transfer are within operational parameters. If any of the monitored parameters are not within the specified limits during the transfer, the control system will switch to exception handling logic. The transfer is stopped by the control system when any of the following are true:

- The level in the HLW effluent transfer vessel (PWD-VSL-00043) reaches its UOL
- The level of the sending equipment reaches its LOL
- A specified volume is transferred, based upon vessel level.

Once the HLW effluent transfer vessel (PWD-VSL-00043) is ready to transfer, the operator will initiate the transfer-out sequence within the control system. Once initiated, the control system verifies that instruments, utilities, and equipment associated with the transfer are within operational parameters and remain as such throughout the transfer. If any of the monitored parameters are not within the specified limits during the transfer, the control system will switch to exception handling logic. The transfer will end when any of the following are true:

- The level in the HLW effluent transfer vessel (PWD-VSL-00043) reaches its LOL
- The plant wash vessel (PWD-VSL-00044) reaches its UOL
- A specified volume is transferred, based upon vessel level

When the level is no longer within the normal operating range due to an abnormality, interlocks along with alarms within the control system help prevent an overflow condition. Figure 2 shows the interlocks and alarms for the level instrument associated with the HLW effluent transfer vessel (PWD-VSL-00043). At the high alarm setpoint, an alarm is generated. At the high-high alarm setpoint, an alarm is generated and all dedicated controlled feeds are isolated. Isolation occurs by a combination of either stopping the motive force or closing valves.

3.3 C3 Floor Drain Collection Vessel (PWD-VSL-00046)

The C3 floor drain collection vessel (PWD-VSL-00046) receives effluent from the cell sump (PWD-SUMP-00071) and the C3 floor drains. Drains are uncontrolled flows and are not controlled by the control system.

When ready to transfer out of the C3 floor drain collection vessel (PWD-VSL-00046), the operator will sample, if necessary, and transfer to the appropriate location.

When the level is no longer within the normal operating range due to an abnormality, alarms within the control system help prevent an overflow condition. Figure 3 shows the alarms for the level instruments associated with PWD-VSL-00046. PWD-LI-4304 monitors the level of the C3 floor drain collection vessel (PWD-VSL-00046), whereas PWD-LI-4301 monitors the seal level in the overflow line. Upon detection of low level in the seal, the control system alarms. The operator is then responsible for adding water to maintain the seal. Upon reaching the high-alarm setpoint in the vessel, an alarm is generated and the operator is responsible for the appropriate action.

3.4 Plant Wash Vessel (PWD-VSL-00044)

Plant wash vessel (PWD-VSL-00044) receives effluent from multiple sources, adjusts the pH, and then recycles the effluent into the waste feed evaporator feed vessels (FEP-VSL-00017A or B). For greater waste management reliability, batch controlled transfers into PWD-VSL-00044 are limited by the control system to one transfer in or out at a time by the batch control mechanism of acquiring and releasing. The vessel vent caustic scrubber (PVP-SCB-00002) effluent is not considered a batch controlled effluent. Once acquired, no other batch control operation will be able to coordinate activities with the plant wash vessel (PWD-VSL-00044) until it is released.

When the vessel is available to receive effluent, the operator will initiate the transfer-in sequence. Once the sequence is initiated, the control system will verify that instruments, utilities, and equipment associated with the transfer are within operational parameters. If any of the monitored parameters are not within the specified limits during the transfer, the control system will switch to exception handling logic. The transfer is stopped by the control system when any of the following are true:

- The level in the plant wash vessel (PWD-VSL-00044) reaches its upper operating limit (UOL)
- The level of the sending entity reaches its lower operating limit (LOL)
- A specified volume is transferred, based upon vessel level

The neutralizing sequence will add caustic until the pH of the vessel is confirmed to be within the desired alkaline conditions. Once the pH is confirmed to be in the desired operating range, the vessel contents will be ready to transfer to the appropriate vessel.

Once the plant wash vessel (PWD-VSL-00044) is ready to transfer its contents, the operator will initiate the transfer-out sequence within the control system. Once initiated, the control system verifies that instruments, utilities, and equipment associated with the transfer are within operational parameters and remain as such throughout the transfer. If any of the monitored parameters are not within the specified limits during the transfer, the control system will switch to exception handling logic. The transfer will end when any of the following are true:

- The level in the plant wash vessel (PWD-VSL-00044) reaches its LOL
- The receiving entity reaches its UOL
- A specified volume is transferred, based upon vessel level.

When the level is no longer within the normal operating range due to an abnormality, interlocks along with alarms within the control system help prevent an overflow condition. Figure 4 shows the interlocks and alarms for the level instrument associated with the plant wash vessel (PWD-VSL-00044). At the high-alarm setpoint, an alarm is generated. At the high-high alarm setpoint, an alarm is generated and all dedicated controlled feeds are isolated. Isolation occurs by a combination of either stopping the motive force, closing valves, or a combination of both.

3.5 Acidic/Alkaline Effluent Vessel (PWD-VSL-00015)

The acidic/alkaline effluent vessel (PWD-VSL-00015) receives effluent from multiple sources, adjusts the pH, and then recycles the effluent into the waste feed evaporator feed vessels (FEP-VSL-00017A or B). For greater waste management reliability, batch controlled transfers into the acidic/alkaline effluent vessel (PWD-VSL-00015) are limited by the control system to one transfer in or out at a time by the batch control mechanism of acquiring and releasing. The Cs evaporator primary/inter/final condensers (CNP-HX-00002/3/4) effluent is not considered a batch controlled effluent. Once acquired, no other batch control operation will be able to coordinate activities with the acidic/alkaline effluent vessel (PWD-VSL-00015) until it is released.

When the vessel is available to receive effluent, the operator will initiate the transfer-in sequence. Once the sequence is initiated, the control system will verify that instruments, utilities, and equipment associated with the transfer are within operational parameters. If any of the monitored parameters are not within the specified limits during the transfer, the control system will switch to exception handling logic. The transfer is stopped by the control system when any of the following are true:

- The level in the acidic/alkaline effluent vessel (PWD-VSL-00015) reaches its UOL
- The level of the sending entity reaches its LOL
- A specified volume is transferred, based on vessel level.

The neutralizing sequence will add caustic until the pH of the vessel is confirmed to be within the desired alkaline conditions. Once the pH is confirmed to be in the desired operating range, the vessel contents will be ready to transfer to the appropriate vessel.

Once the acidic/alkaline effluent vessel (PWD-VSL-00015) is ready to transfer its contents, the operator will initiate the transfer-out sequence within the control system. Once initiated, the control system verifies that instruments, utilities, and equipment associated with the transfer are within operational parameters and remain as such throughout the transfer. If any of the monitored parameters are not within the specified limits during the transfer, the control system will switch to exception handling logic. The transfer will end when any of the following are true:

- The level in the acidic/alkaline effluent vessel (PWD-VSL-00015) reaches its LOL
- The receiving entity reaches its UOL
- A specified volume is transferred, based on vessel level

When the level is no longer within the normal operating range due to an abnormality, interlocks along with alarms within the control system help prevent an overflow condition. Figure 5 shows the interlocks and alarms for the level instrument associated with the acidic/alkaline effluent vessel (PWD-VSL-00015). At the high-alarm setpoint, an alarm is generated. At the high-high alarm setpoint, an alarm is generated and all dedicated controlled feeds are isolated. Isolation occurs by a combination of either stopping the motive force or closing valves.

3.6 Acidic/Alkaline Effluent Vessel (PWD-VSL-00016)

The acidic/alkaline effluent vessel (PWD-VSL-00016) receives effluent from multiple sources, adjusts the pH, and then recycles the effluent into the waste feed evaporator feed vessels (FEP-VSL-00017A or B). For greater waste management reliability, batch controlled transfers into PWD-VSL-00016 are limited by the control system to one transfer in or out at a time by the batch control mechanism of acquiring and releasing. The Cs evaporator primary/inter/final condensers (CNP-HX-00002/3/4) effluent is not considered a batch controlled effluent. Once acquired, no other batch control operation will be able to coordinate activities with the acidic/alkaline effluent vessel (PWD-VSL-00016) until it is released.

When the vessel is available to receive effluent, the operator will initiate the transfer-in sequence. Once the sequence is initiated, the control system will verify that instruments, utilities, and equipment associated with the transfer are within operational parameters. If any of the monitored parameters are not within the specified limits during the transfer, the control system will switch to exception handling logic. The transfer is stopped by the control system when any of the following are true:

- The level in the acidic/alkaline effluent vessel (PWD-VSL-00016) reaches its UOL
- The level of the sending entity reaches its LOL
- A specified volume is transferred, based on vessel level.

The neutralizing sequence will add caustic until the pH of the vessel is confirmed to be within the desired alkaline conditions. Once the pH is confirmed to be in the desired operating range, the vessel contents will be ready to transfer to the appropriate vessel.

Once the acidic/alkaline effluent vessel (PWD-VSL-00016) is ready to transfer, the operator will initiate the transfer-out sequence within the control system. Once initiated, the control system verifies that instruments, utilities, and equipment associated with the transfer are within operational parameters and remain as such throughout the transfer. If any of the monitored parameters are not within the specified limits during the transfer, the control system will switch to exception handling logic. The transfer will end when any of the following are true:

- The level in the acidic/alkaline effluent vessel (PWD-VSL-00016) reaches its LOL
- The receiving entity reaches its UOL
- A specified volume is transferred, based on vessel level

When the level is no longer within the normal operating range due to an abnormality, interlocks along with alarms within the control system help prevent an overflow condition. Figure 6 shows the interlocks and alarms for the level instrument associated with the acidic/alkaline effluent vessel (PWD-VSL-00016). At the high-alarm setpoint, an alarm is generated. At the high-high alarm setpoint, an alarm is generated

and all dedicated controlled feeds are isolated. Isolation occurs by a combination of either stopping the motive force or closing valves.

3.7 All PT PWD Facility Sumps

All PT PWD facility sumps operate in a typical manner. All of the sumps are maintained dry. Upon detection of a high liquid level in the sump, the control system alarms and the operator must take the necessary action to empty the sump. Figure 7 shows the high alarm for the level instrument associated with the feed receipt C5 cell sump (PWD-SUMP-00001), which serves as a typical method of operation for all PT PWD sumps.

3.8 Leak Detection Boxes

Leak detection boxes with leak detection instrumentation are available for every inter-facility transfer line. The term inter-facility transfer lines also includes any transfers to or from outside the physical boundary of the WTP project. When a leak is detected in the transfer line being used, an alarm is generated and the transfer is stopped by the control system. Figure 8 shows the level instrument associated with a leak detection box (PWD-LDB-00001). This serves as a typical for all leak detection boxes in the PT facility.

Figure 1. Level Measurement for the Ultimate Overflow Vessel (PWD-VSL-00033)

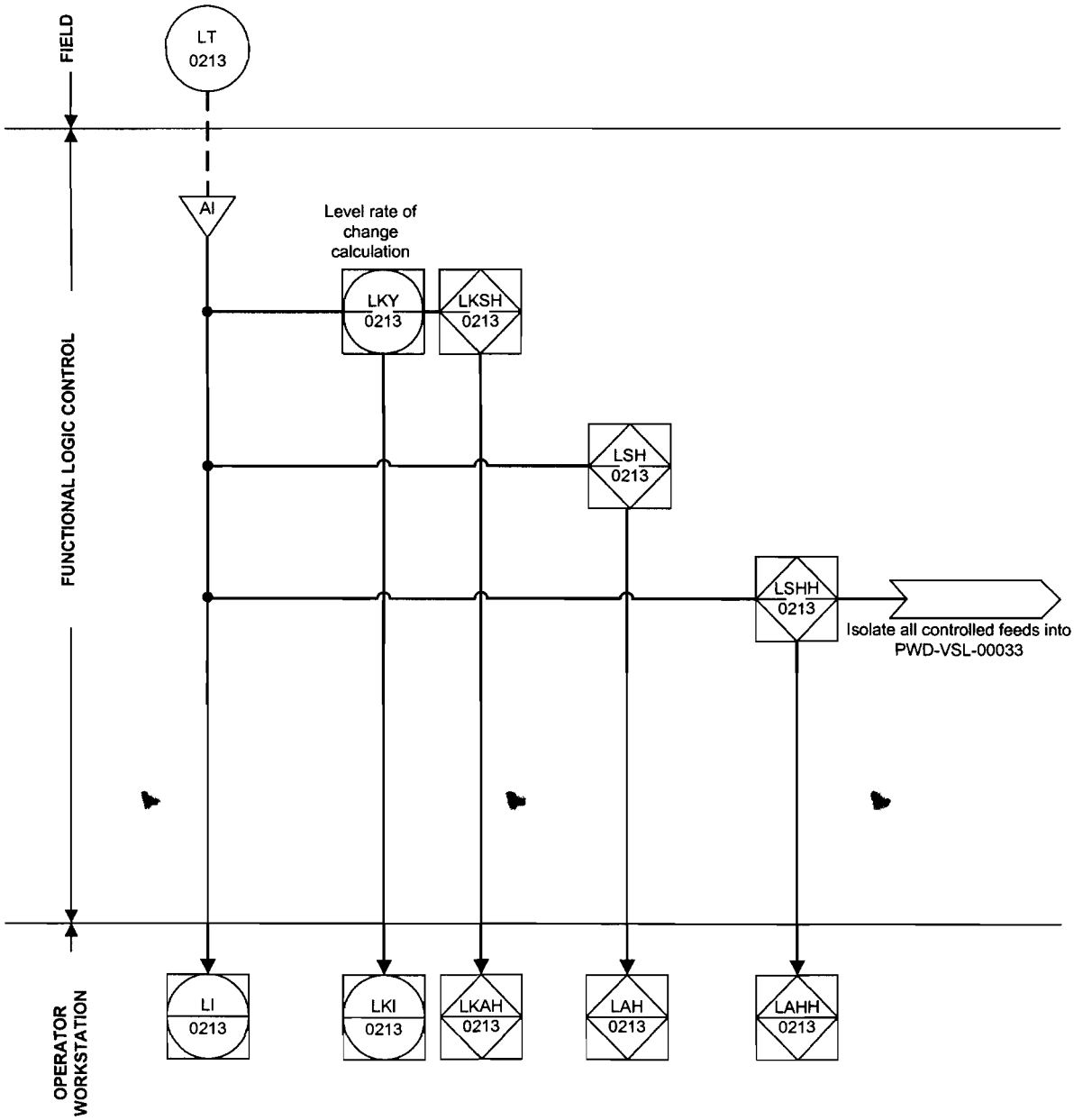

Figure 2. Level Measurement for the HLW Effluent Transfer Vessel (PWD-VSL-00043)

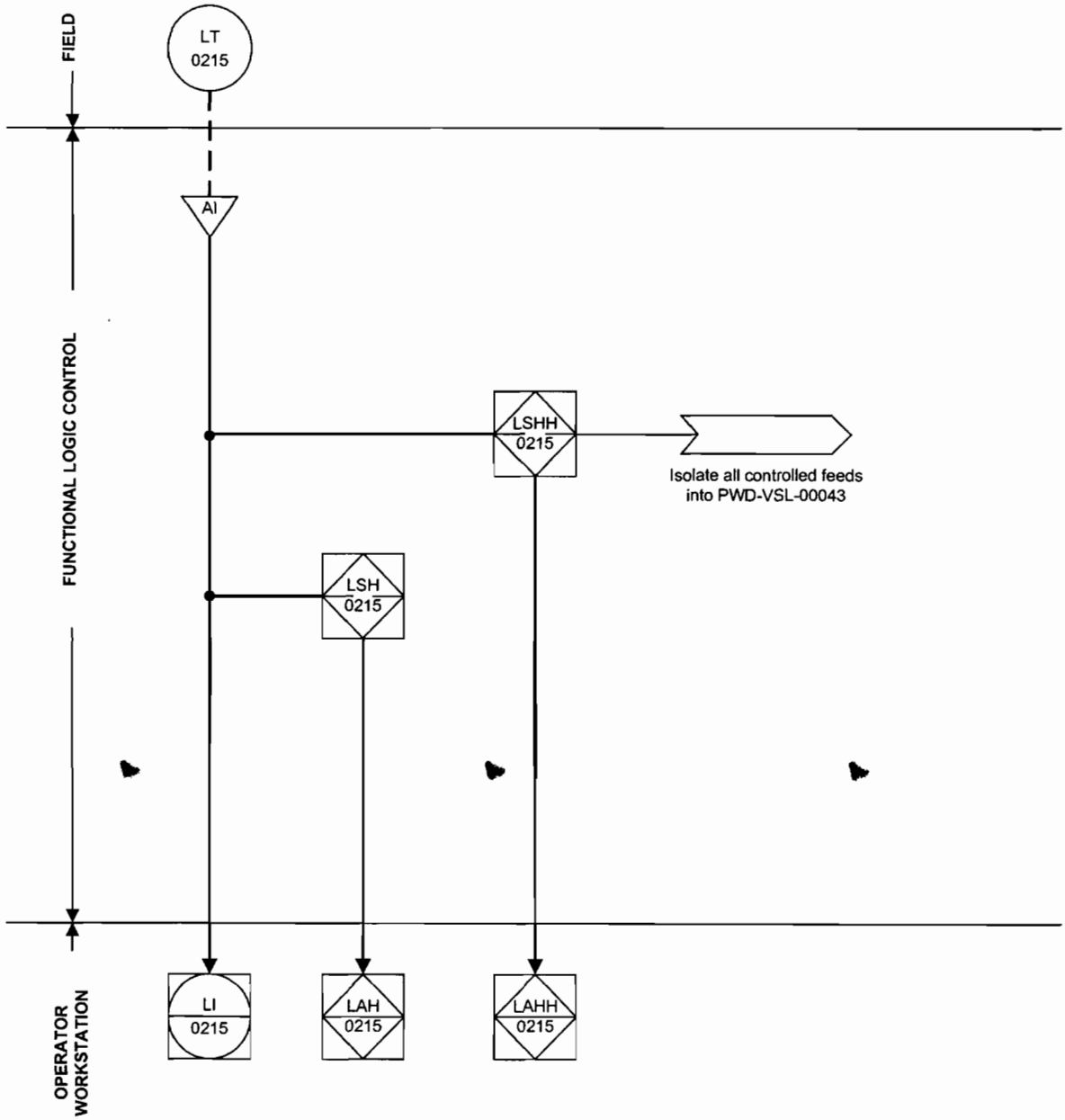

Figure 3. Level Measurement for the C3 Floor Drain Collection Vessel (PWD-VSL-00046)

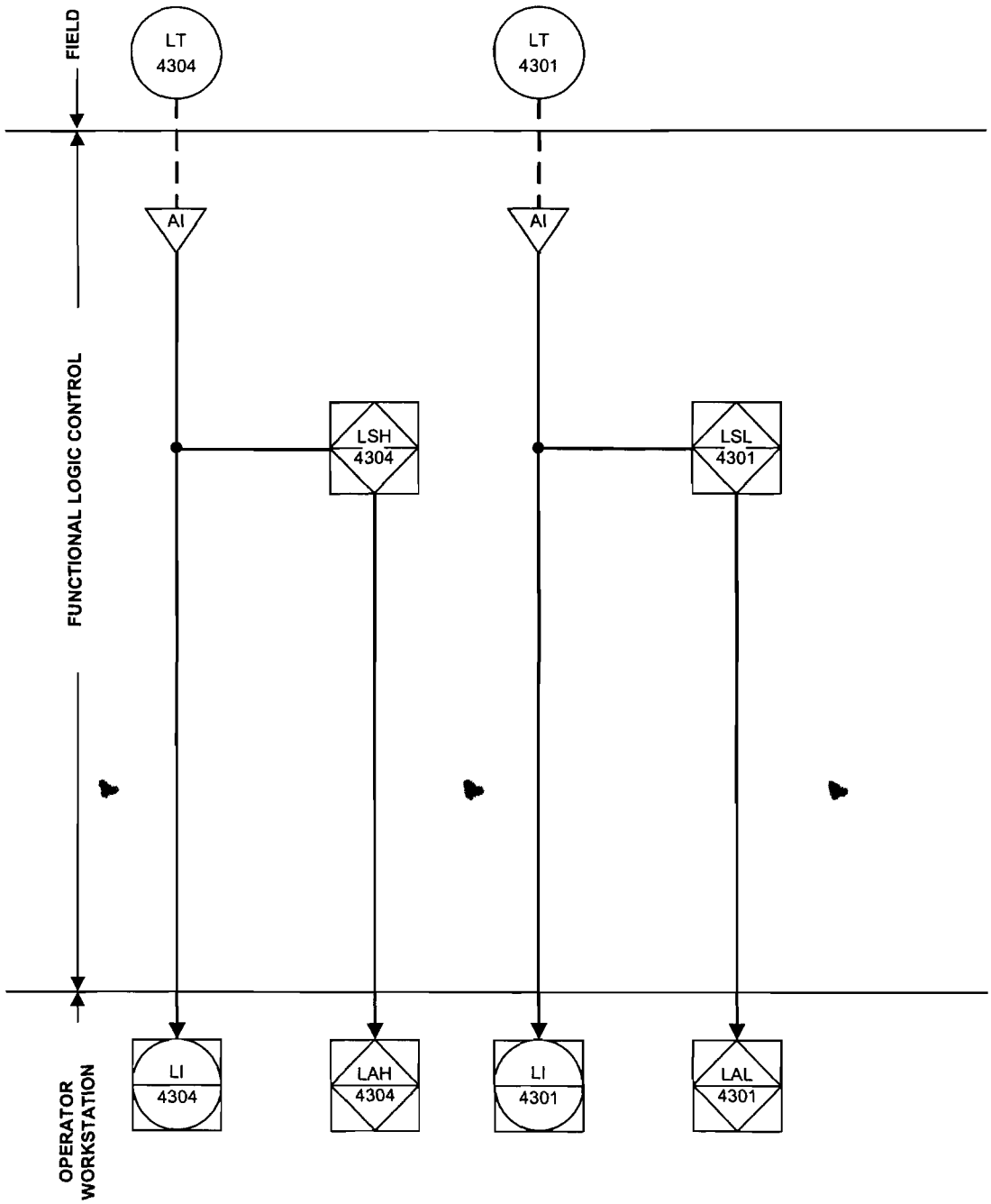

Figure 4. Level Measurement for Plant Wash Vessel (PWD-VSL-00044)

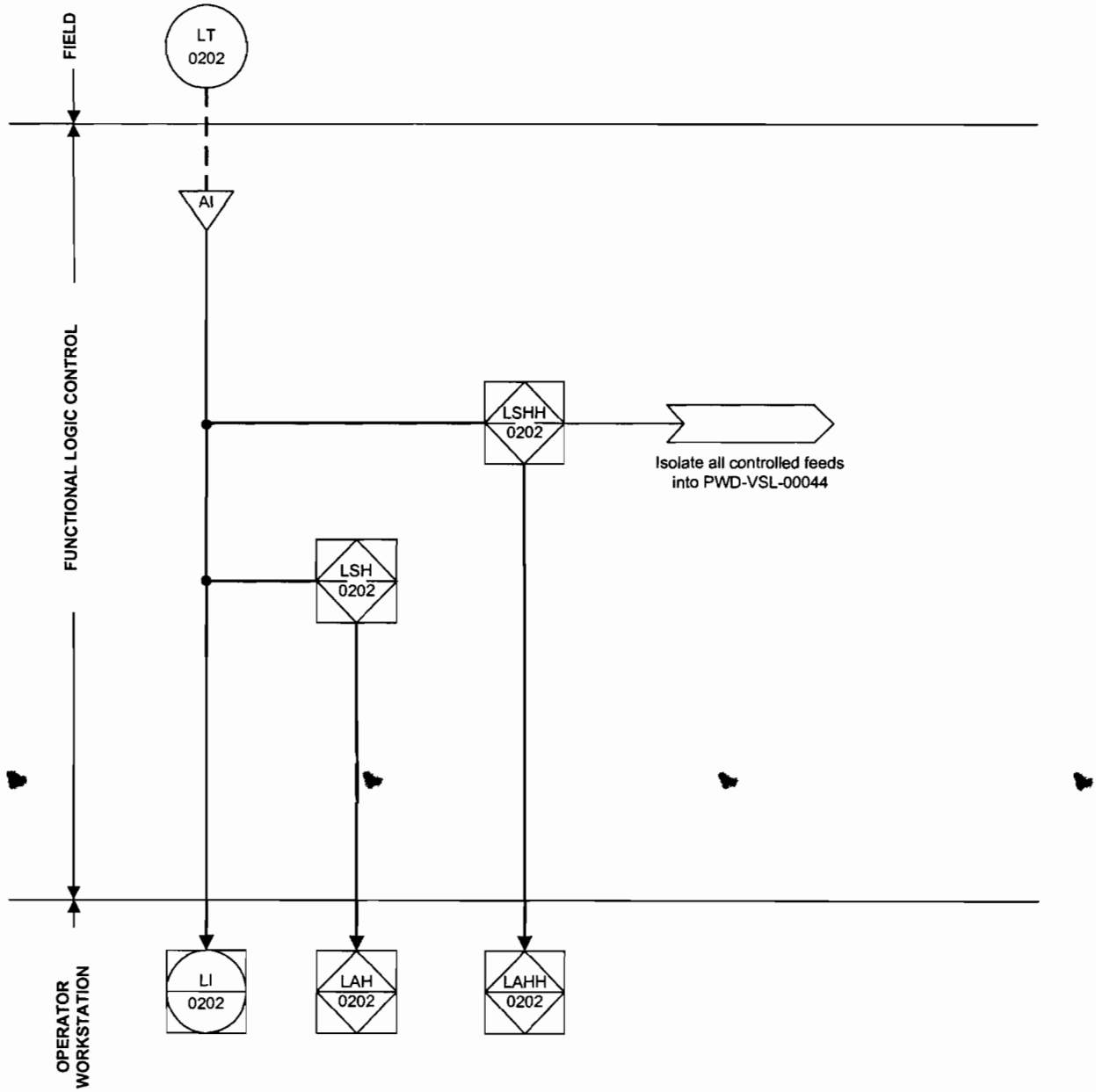

Figure 5. Level Measurement for Acidic/Alkaline Effluent Vessel (PWD-VSL-00015)

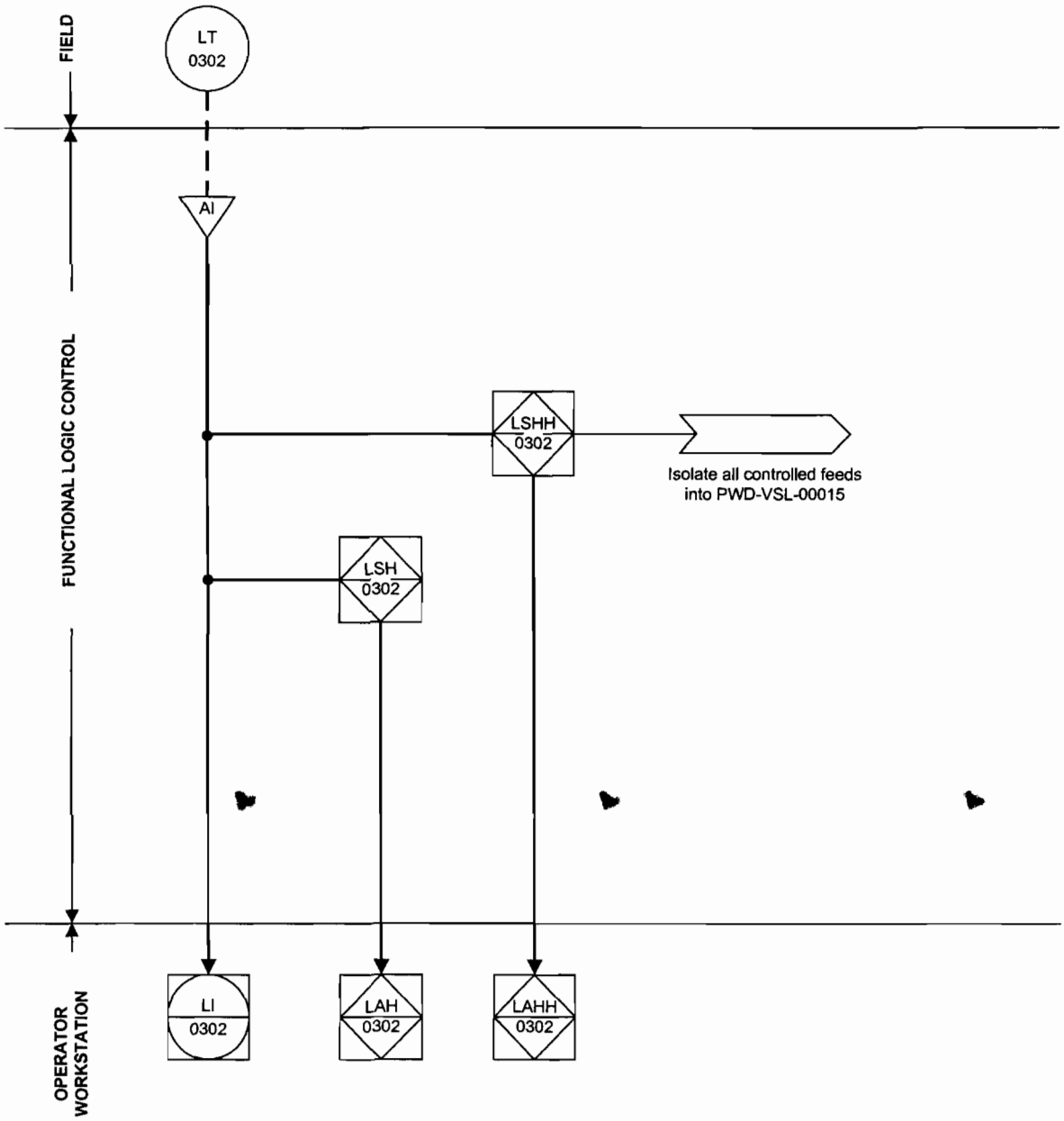

Figure 6. Level Measurement for Acidic/Alkaline Effluent Vessel (PWD-VSL-00016)

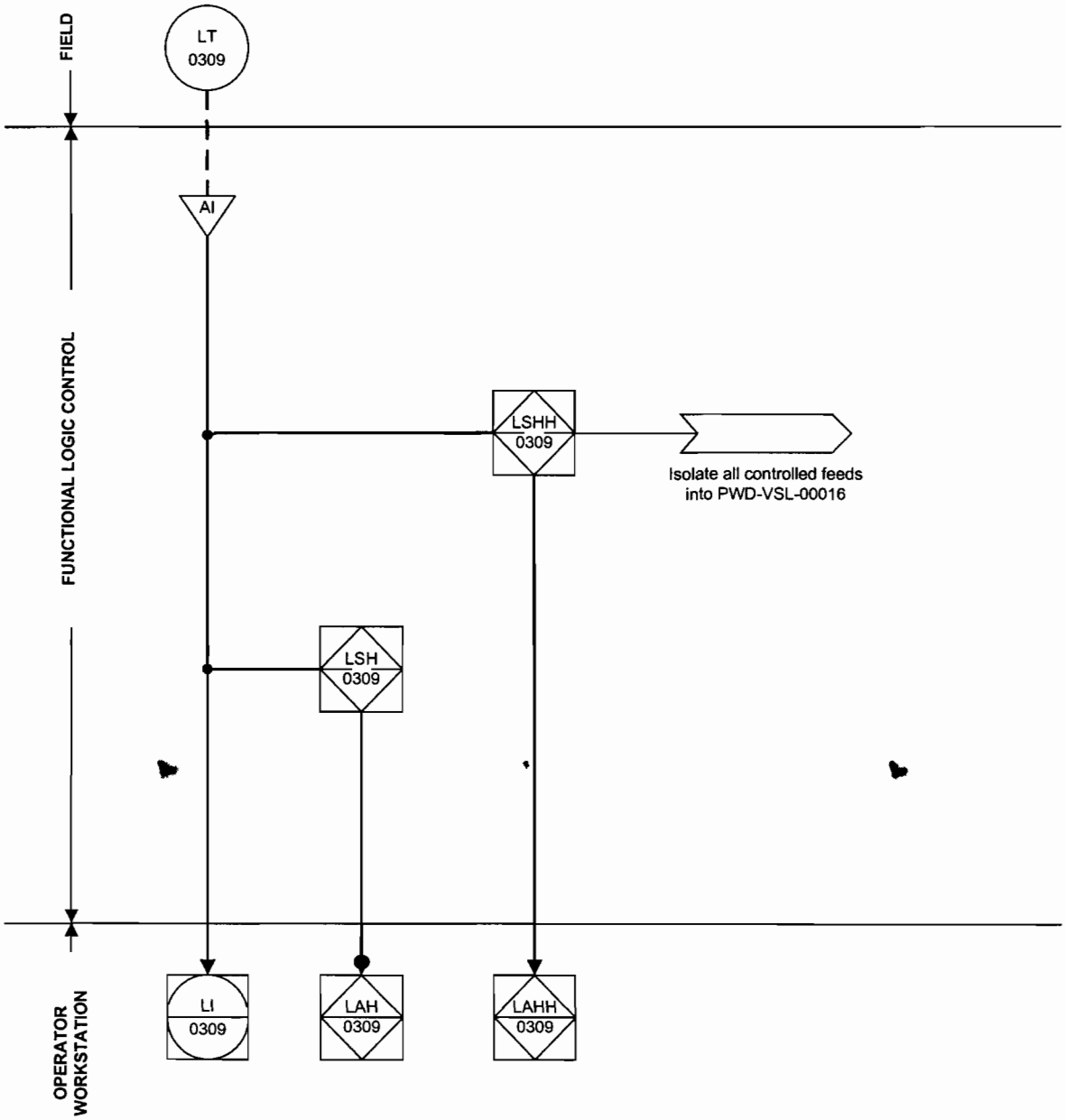

Figure 7. Level Measurement for Feed Receipt C5 Cell Sump (PWD-SUMP-00001)

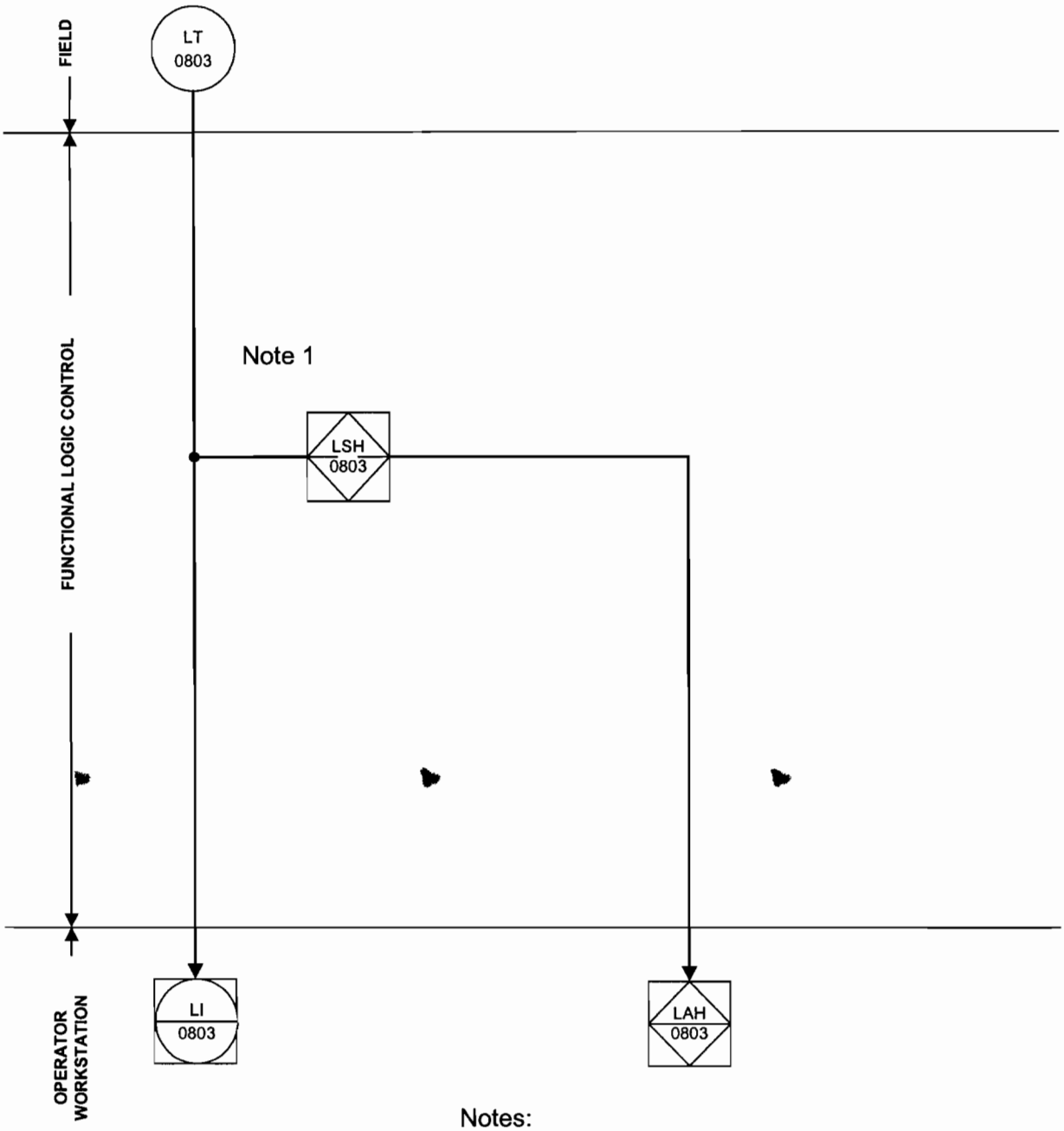

Notes:
1. Typical for all PWD sumps in the PT facility

Figure 8. Level Measurement for Leak Detection Box (PWD-LDB-00001)

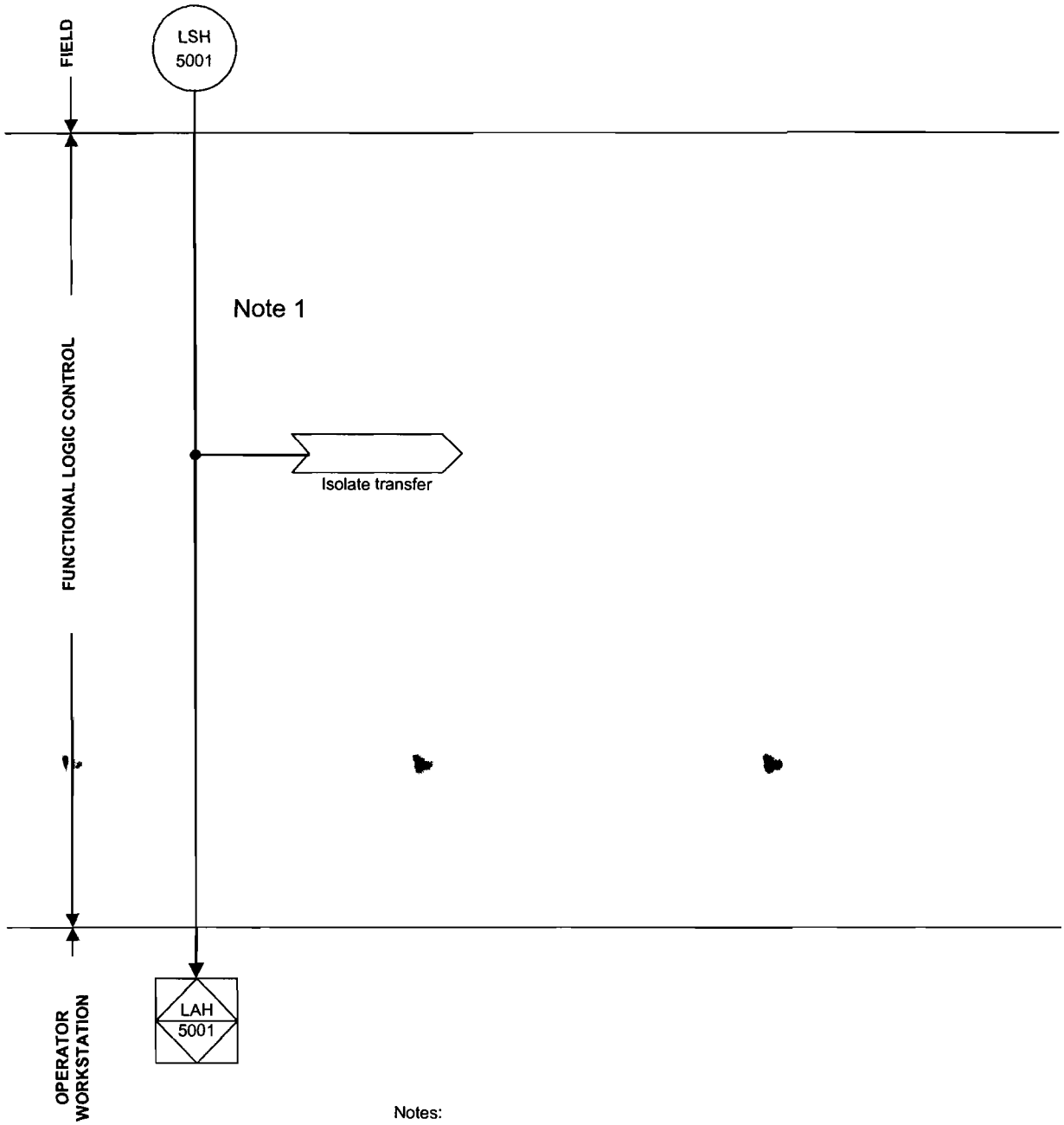

Notes:
1. Typical of all leak detection boxes in the PT facility

ISSUED BY
RPP-WTP PDC

R10421977

Document title: **System Logic Description for Pretreatment Vessel Vent Process and Exhaust Systems**

Contract number: DE-AC27-01RV14136

Department: Controls and Instrumentation

Author(s): A. M. "Bill" Jaleel

Principal author signature:

Document number: 24590-PTF-PER-J-04-0003, Rev 0

Checked by: Maynardo Eugenio

Checker signature:

Date of issue: 9 November 2004

Issue status: Issued for Permitting Use

Approved by: S. Anderson

Approver's position: C&I Engineering Manager

Approver signature: H. Val McCallum for S. Anderson

This bound document contains a total of 15 sheets

River Protection Project
Waste Treatment Plant
2435 Stevens Center Place
Richland, WA 99352
United States of America
Tel: 509 371 2000

Notice

Please note that source, special nuclear, and byproduct materials, as defined in the Atomic Energy Act of 1954 (AEA), are regulated at the US Department of Energy (DOE) facilities exclusively by DOE acting pursuant to its AEA authority. DOE asserts that pursuant to the AEA, it has sole and exclusive responsibility and authority to regulate source, special nuclear, and byproduct materials at DOE-owned nuclear facilities. Information contained herein on radionuclides is provided for process description purposes only.

History Sheet

Rev	Date	Reason for revision	Revised by
0	9 November 2004	Issued for Permitting Use	BMJ

Contents

Notice ii
History Sheet iii
Acronyms and Abbreviations v
Glossary vi
1 Introduction 1
2 Applicable Documents 1
3 Description 1
3.1 Vessel Vent Caustic Scrubber (PVP-SCB-00002) 2
3.2 High Efficiency Mist Eliminators (HEMEs) PVP-HEME-00001A, PVP-HEME-00001B, PVP-HEME-00001C 2
3.3 HEME Drain Collection Vessel, PVP-VSL-00001 3
3.4 Other Miscellaneous Treatment Units 3

Figures

Figure 1 Level Measurement for Vessel Vent Scrubber (PVP-SCB-00002) 4
Figure 2 Level Measurement for the Vessel Vent HEME (PVP-HEME-00001A) 5
Figure 3 Level Measurement for the Vessel Vent HEME (PVP-HEME-00001B) 6
Figure 4 Level Measurement for the Vessel Vent HEME (PVP-HEME-00001C) 7
Figure 5 Level Measurement for Vessel Vent HEME Drain Collection Vessel (PVP-VSL-00001) 8

Acronyms and Abbreviations

CLR	Cooler
DOE	US Department of Energy
HEME	High Efficiency Mist Eleminator
HLW	High Level Waste
LAH	Level Alarm High
LAHH	Level Alarm High-High
LAL	Level Alarm Low
LALL	Level Alarm Low-Low
LI	Level Indication
LOL	lower operating limit
LSH	Level Switch High
LSHH	Level Switch High-High
LSL	Level Switch Low
LSLL	Level Switch Low-Low
LT	Level Transmitter
P&ID	Piping and Instrumentation Diagram
PCS	Process Control System
PT	Pretreatment
PVP	Pretreatment Vessel Vent Process System
PVV	Pretreatment Vessel Vent Exhaust system
PWD	Plant Wash and Disposal System
RLD	Radioactive Liquid Disposal System
SCB	Scrubber
TFC	tank farm contractor
UOL	upper operating limit
VOC	Volatile Organic Compound
WTP	River Protection Project - Waste Treatment Plant

Glossary

acquire	Acquire is a command under a batch control that reserves a group of equipment for that particular batch control operation.
actual volume	Actual volume is the amount, in US gallons, of waste or process fluid in any vessel.
available space	Available space refers to the volume, in US gallons, of waste or process fluid that any vessel can accommodate and remain below the upper operating limit (UOL). Available space can be calculated as follows: *Available Space = UOL − Actual Volume*
available volume	Available volume refers to the volume, in US gallons, of waste or process fluid that any vessel can transfer to another vessel and remain above the lower operating limit (LOL). Available volume can be calculated as follows: *Available Volume = Actual Volume − LOL*
batch	This refers to material that is being produced or that has been produced by a single execution of a batch process.
batch control	This term refers to control activities and control functions that provide an ordered set of processing activities to complete a batch process.
batch process	A batch process leads to the production of a finite quantity of material by subjecting quantities of input material to an ordered set of processing activities over a finite period of time using one or more pieces of equipment.
control system	This term refers to electronic processors that perform regulatory and logic control functions necessary for normal operation of the plant.
exception handling	This term refers to those functions that deal with plant or process contingencies and other events that occur outside the normal or desired behavior of batch control.
intermediate products	These are treated high-level waste (HLW) products that are staged and blended in the pretreatment (PT) facility prior to immobilization in the HLW vitrification facility. These products include treated solids slurry, strontium and transuranic elements (Sr/TRU) precipitate slurry and cesium concentrate.
LOL	Lower operating limit- a vessel low level set point used to stop a transfer-out batch operation from that vessel under normal plant operations.
permissive	A permissive is an interlock that allows a device to change state or a sequence to start. Once a device has changed state or a sequence has started, a permissive has no further effect on the device or sequence.
release	Release is a command under a batch control that opens up a group of equipment for any batch control to acquire.
requested volume	The requested volume is the volume, in US gallons, of waste or process fluid that can be delivered to the destination vessel and the total volume will remain below the vessel's upper operating level.

Sr/TRU precipitate	For envelope C feed, the strontium and transuranic elements are precipitated out of solution and separated from the supernate along with any entrained solids to produce the slurry.
trip	A trip is an interlock that does not allow a device to change state or a sequence to start. Once a device has changed state or a sequence has started, a trip continues to have an effect on the device or sequence.
UOL	Upper operating limit – A vessel high level setpoint used to stop a transfer-in batch operation to that vessel under normal plant operation.

1 Introduction

This document describes the control logic associated with vessel instrumentation and other ancillary equipment within the Pretreatment Vessel Vent Process (PVP) and the Pretreatment Vessel Vent Exhaust (PVV) Systems that function to prevent inadvertent overflows within these systems through the control system.

2 Applicable Documents

24590-WTP-M6-50-P0001, *P&ID Symbols and Legend Sheet 1 of 6.*

24590-WTP-M6-50-P0002, *P&ID Symbols and Legend Sheet 2 of 6.*

24590-WTP-M6-50-P0003, *P&ID Symbols and Legend Sheet 3 of 6.*

24590-WTP-M6-50-P0004, *P&ID Symbols and Legend Sheet 4 of 6.*

24590-WTP-M6-50-P0005, *P&ID Symbols and Legend Sheet 5 of 6.*

24590-WTP-M6-50-P0006, *P&ID Symbols and Legend Sheet 6 of 6.*

24590-PTF-M6-PVP-P0017, *P&ID-PTF Pretreatment Vessel Vent Process System Caustic Scrubber to HEMEs (Q)*

24590-PTF-M6-PVP-P0018, *P&ID-PTF Pretreatment Vessel Vent Process System (PVP) HEMEs to VOC Oxidation Unit (Q).*

24590-PTF-3YD-PVP-00001, System Description for Pretreatment Vessel Vent Process System, PVP

3 Description

The following plant items and associated ancillary equipment are associated with dangerous waste management within the PVP and the PVV systems as a part of the PT facility.

Vessel Vent Caustic Scrubber (PVP-SCB-00002)
Vessel Vent High Efficiency Mist Eliminators (HEMEs) (PVP-HEME-00001A/B/C)
Vessel Vent HEME Drain Collection Vessel (PVP-VSL-00001)
Vessel Vent Volatile Organic Compounds (VOC) Oxidizer Unit (PVP-OXID-00001)
Vessel Vent After Cooler (PVP-CLR-00001)
Vessel Vent Carbon Bed Adsorbers (PVP-ADBR-00001A/B)
Vessel Vent Primary HEPA Filters (PVV-HEPA-00001A/B)
Vessel Vent Secondary HEPA Filters (PVV-HEPA-00002A/B)
Vessel Vent Adsorber Outlet Filter (PVP-MOD-00001)
Vessel Vent Exhaust Fans (PVV-FAN-00001A/B)

3.1 Vessel Vent Caustic Scrubber (PVP-SCB-00002)

During normal operations, the vessel vent caustic scrubber is operated continuously to receive the combined vent off gas stream collected from the process vessels located in the pretreatment facility through the common exhaust header. The primary function of the caustic scrubber is to absorb the Nitrogen Oxides (NOx) and acid gases and remove large particulates from the feed gases. The vent off gases enters the caustic scrubber and flow upward through a packed bed, which provide contact with alkaline scrubbing liquid flowing downward. The reaction results in a scrubbing liquid solution that is collected in the caustic scrubber (PVP-SCB-00002). While in operation, the scrubber liquid solution is continuously recycled back to the caustic scrubber (PVP-SCB-00002) to provide adequate mixing.

Under normal conditions, the level in the caustic scrubber (PVP-SCB-00002) is continuously monitored and maintained by the control system within the normal operating range by transferring of the scrubber solution upon reaching the upper operating limit.

The control system will verify that instruments, utilities and equipment associated with the transfer are within operational parameters. The transfer is initiated by the control system when the level in the caustic scrubber (PVP-SCB-00002) reaches its upper operating limit (UOL). The transfer is stopped by the control system when any of the following are true: The level in the Caustic scrubber (PVP-SCB-00002) reaches its lower operating limit (LOL), or the level in the receiving vessel PWD-VSL-00044 reaches its upper operating limit (UOL).

The scrubber transfers are also controlled by the batch control mechanism of acquiring and releasing of the plant wash vessel in system PWD. The acquire and release commands ensure that the entities involved in this batch transfer cannot transfer in or out from multiple destinations at the same time. Once the scrubber (PVP-SCB-00002) is ready to transfer, the operator will initiate a transfer-out sequence within the control system. Once initiated, the control system verifies that instruments, utilities, and equipment associated with the transfer are within operational parameters and remain as such throughout the transfer. If any of the monitored parameters are not within the specified limits during the transfer, the control system will switch to exception handling logic. Under normal operating conditions the sequence will end if any of the following becomes true:

- The level in the plant wash vessel (PWD-VSL-00044) reaches its upper operating limit (UOL).
- The specified volume is transferred.
- The level in the scrubber (PVP-SCB-00002) reaches its lower operating limit (LOL).

When the level in the caustic scrubber (PVP-SCB-00002) is no longer within the normal operating range due to abnormality, interlocks along with alarms within the control system help prevent an overflow condition. Figure 1 shows the interlocks and alarms for the level instrument associated with the caustic scrubber (PVP-SCB-00002).

3.2 High Efficiency Mist Eliminators (HEMEs) PVP-HEME-00001A, PVP-HEME-00001B, PVP-HEME-00001C

The combined vessel vent exhaust gas stream will flow from the vessel vent caustic scrubber (PVP-SCB-00002) outlet to the HEMEs for removal of mist. There will be three 50% capacity HEMEs, of which two are in service and one is available as standby. HEMEs are passive devices and can be put in service or isolated from the process by opening or closing the isolation valve provided at the inlet of each HEME.

When a HEME is put in service, a continuous spray of demineralized water is applied at its inlet nozzle to ensure the inlet gas stream is saturated. The drain from the HEMEs flows into the HEME drain collection vessel (PVP-VSL-00001). During normal operation, the level in the HEME is continuously monitored by the control system. If the level reaches a predetermined high set point due to abnormality such as a clog in the drain line, interlocks and alarms within the control system stop the demineralized water supply to the HEME. Alternatively, demineralized water supply can be stopped manually at the discretion of the operator.

Refer to Figure 2, 3 and 4 for level measurement details for the HEMEs.

3.3 HEME Drain Collection Vessel, PVP-VSL-00001

When the HEMEs are operating, the HEME drain collection vessel (PVP-VSL-00001) will continuously receive and store any liquid collected from the HEMEs. It will also receive any liquid collected from any flush solution (primarily process condensate from the radioactive liquid disposal system (RLD)) from the header should the header require flushing. This vessel can also receive process condensate directly from system RLD to ensure a minimum level is maintained. When the level reached a predetermined setpoint, a portion of the solution is transferred to the plant wash vessel (PWD-VSL-00044) in the plant wash and disposal system (PWD). While stored, the liquid solution is continuously recirculated to provide adequate mixing and avoid settling of solids.

Under normal conditions, the level in the HEME drain collection vessel is continuously monitored and maintained by the control system within the normal operating range by transferring excess of the liquid solution to the plant wash vessel (PWD-VSL-00044) in the plant wash and disposal system (PWD).

The HEME drain collection vessel transfers are controlled by the control system and limited by the batch control mechanism of acquiring and releasing of the plant wash vessel in system PWD. The acquire and release commands ensure that the entities involve in this batch transfer cannot transfer in or out from multiple destinations at the same time. Once the HEME drain collection vessel (PVP-VSL-00001) is ready to transfer, the operator will initiate a transfer-out sequence within the control system. Once initiated, the control system verifies that instruments, utilities, and equipment associated with the transfer are within operational parameters and remain as such throughout the transfer. If any of the monitored parameters are not within the specified limits during the transfer, the control system will switch to exception handling logic. Under normal operating conditions the sequence will end if any of the following becomes true:

- The level in the plant wash vessel (PWD-VSL-00044) reaches its upper operating limit (UOL).
- The specified volume is transferred.
- The level in the HEME drain collection vessel (PVP-VSL-00001) reaches its lower operating limit (LOL).

When the level in the HEME drain collection vessel is no longer within the normal operating range due to abnormality, low level interlocks along with alarms within the control system will stop the moving force. Overflow conditions will be prevented administratively by the operator upon receiving a High level alarm.

Refer to Figure 5 for level measurement details for the vessel vent HEME drain collection vessel (PVP-VSL-00001).

3.4 Other Miscellaneous Treatment Units

Pending design evolution of the Pretreatment Vessel Vent Process (PVP) and Pretreatment Vessel Vent Exhaust (PVV) Systems.

Figure 1 **Level Measurement for Vessel Vent Scrubber (PVP-SCB-00002)**

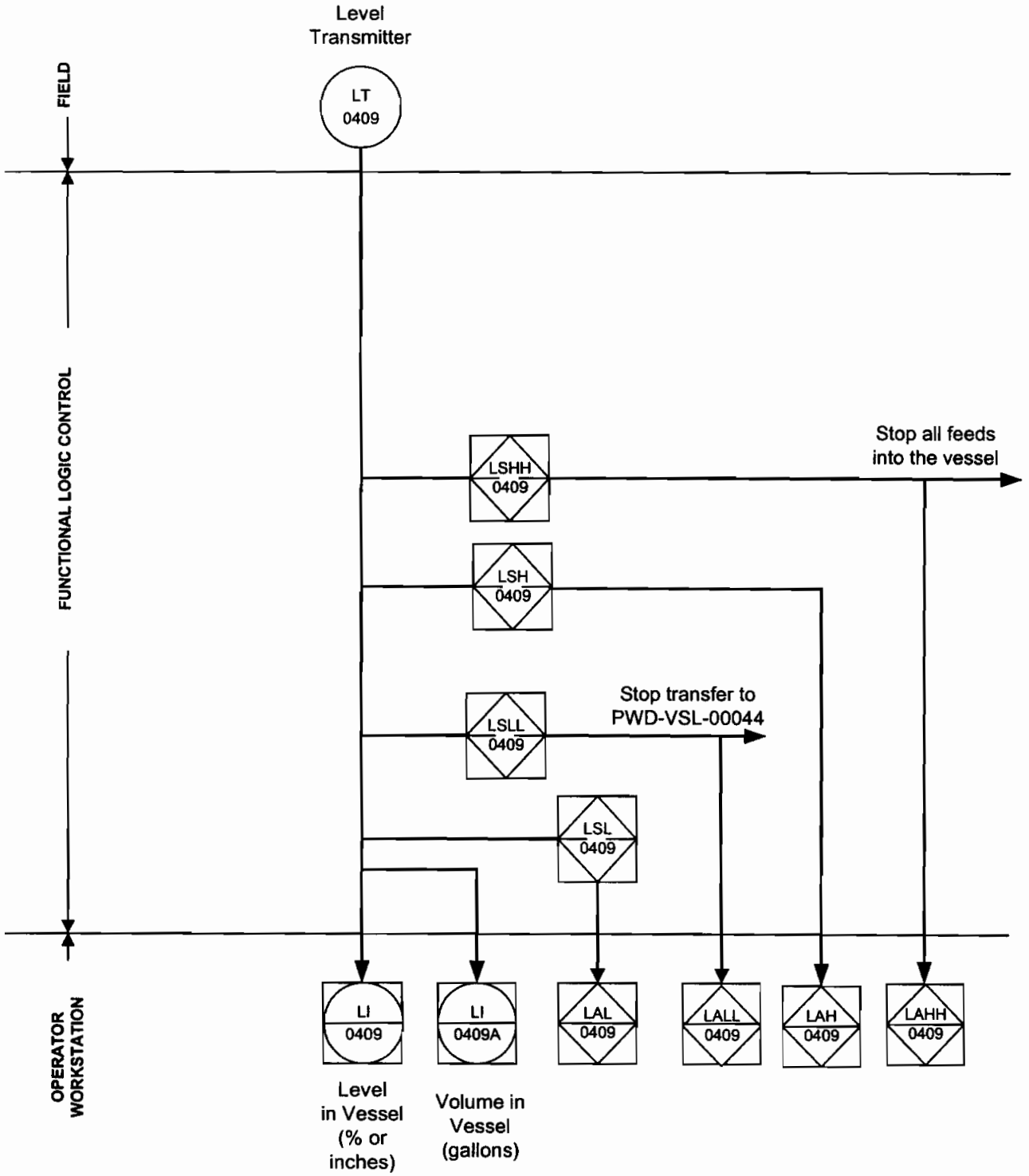

Figure 2 **Level Measurement for the Vessel Vent HEME (PVP-HEME-00001A)**

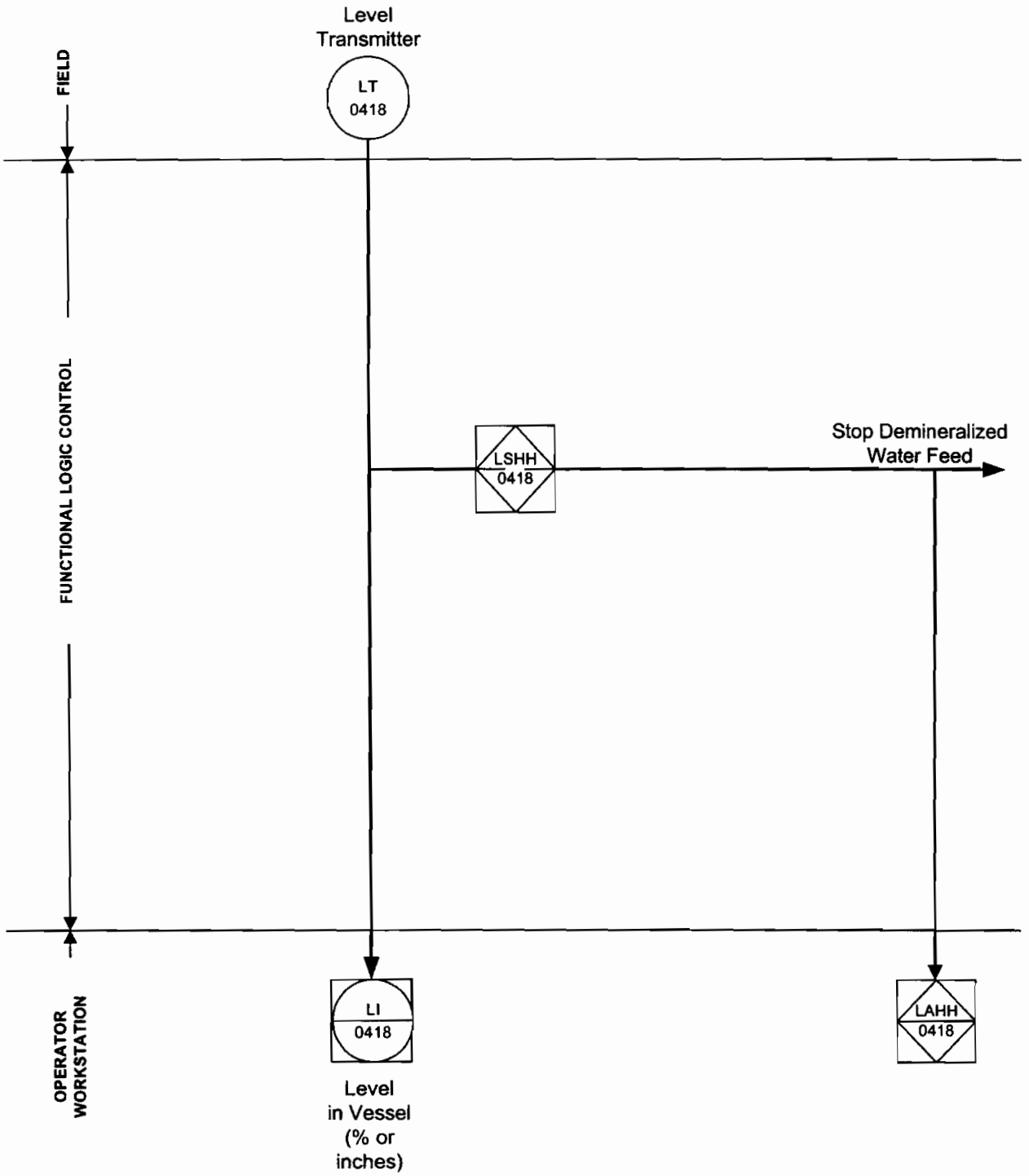

Figure 3 Level Measurement for the Vessel Vent HEME (PVP-HEME-00001B)

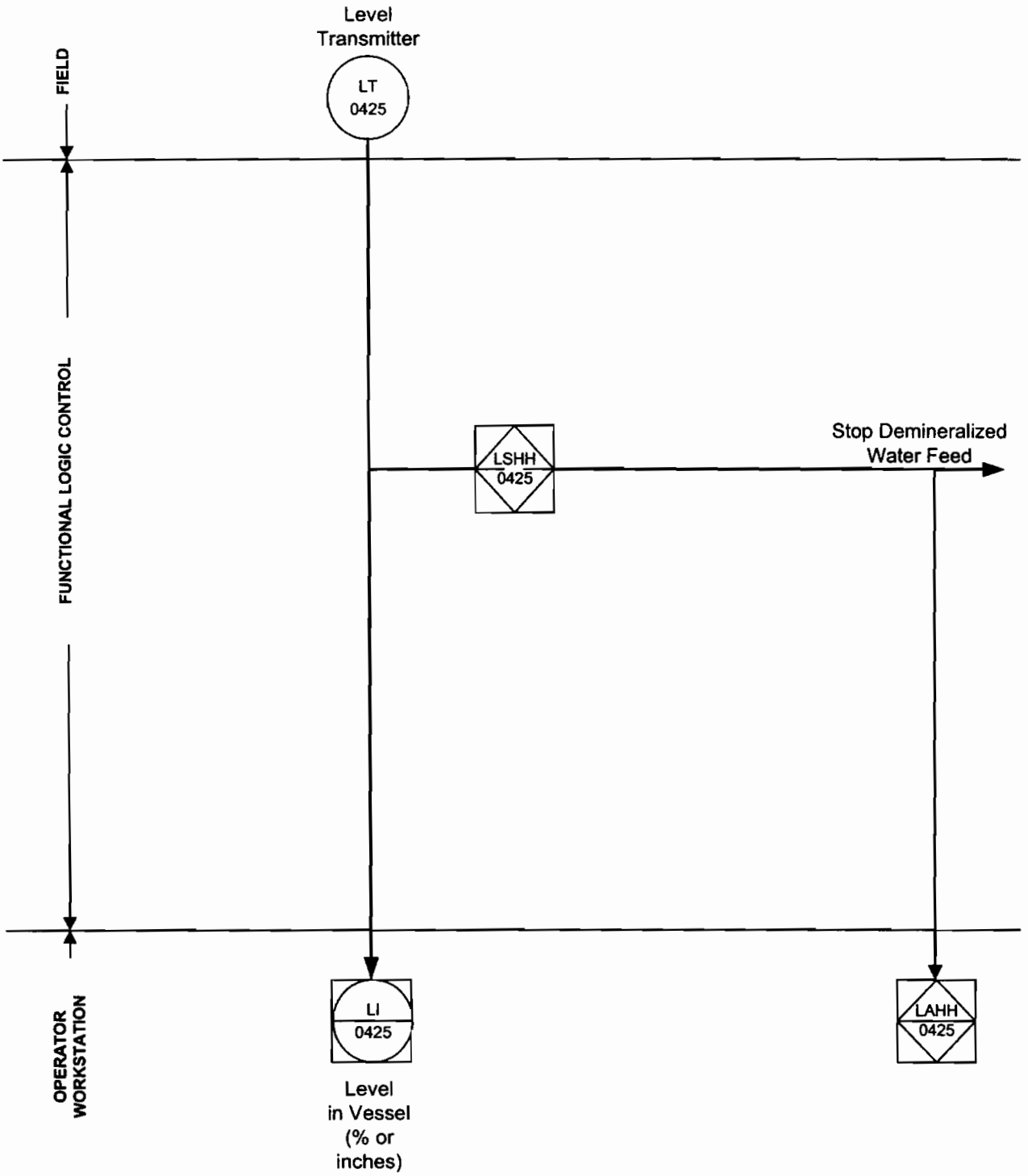

Figure 4 Level Measurement for the Vessel Vent HEME (PVP-HEME-00001C)

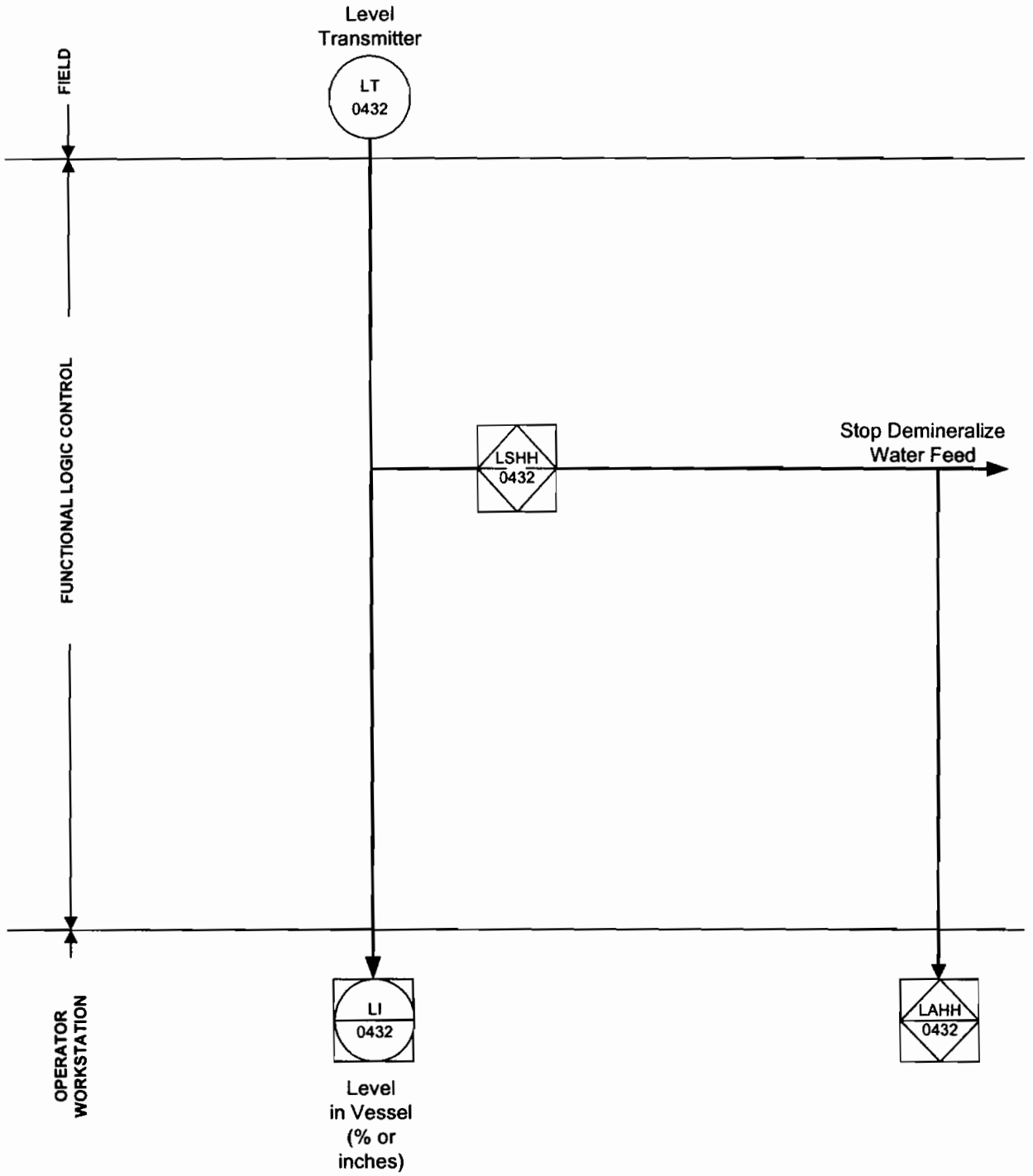
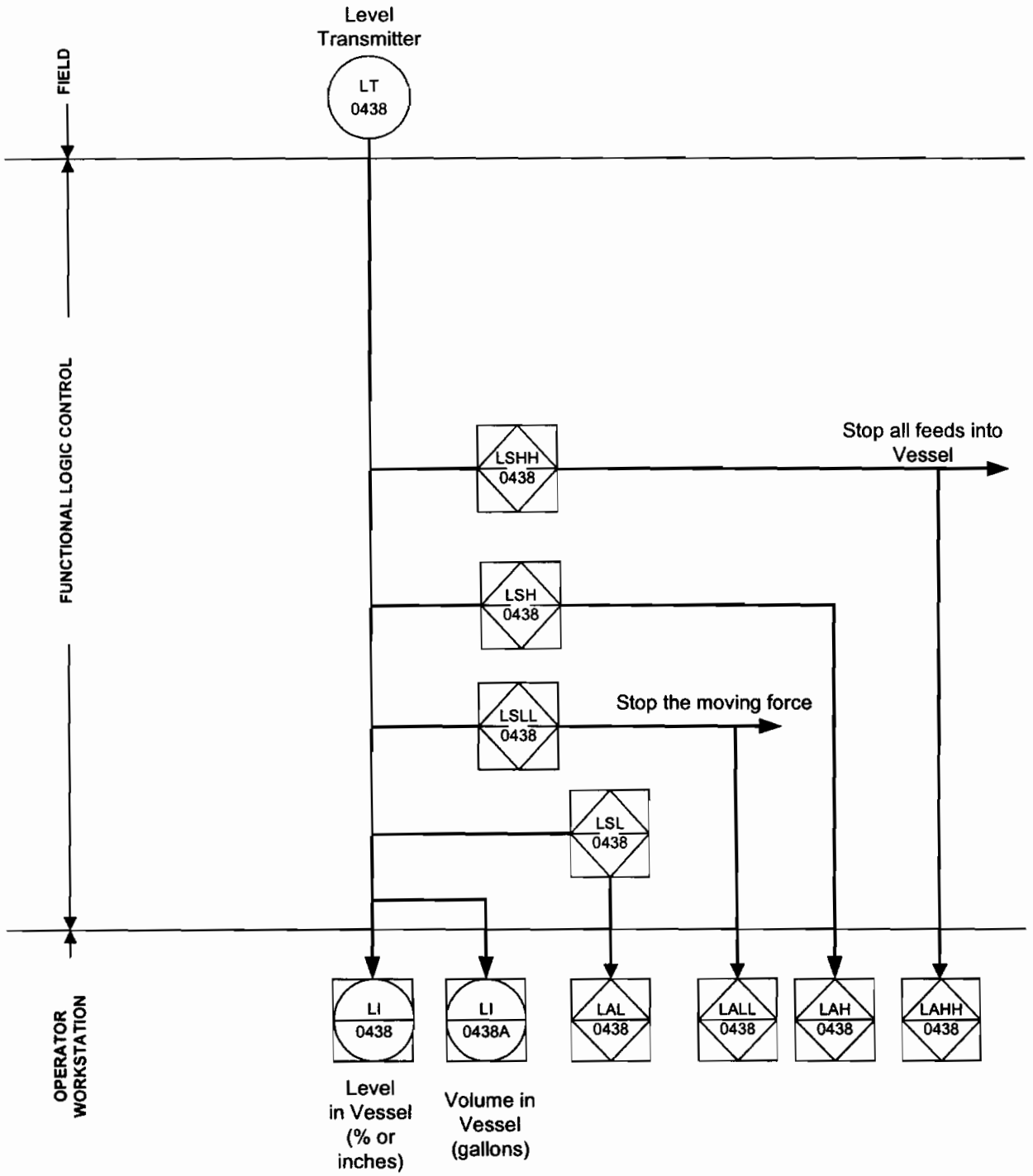
Figure 5 **Level Measurement for Vessel Vent HEME Drain Collection Vessel (PVP-VSL-00001)**