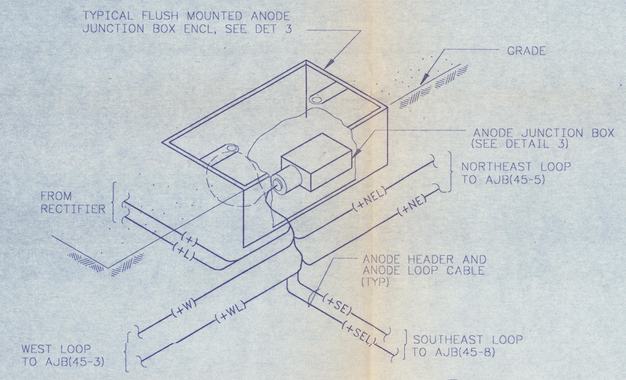

DETAIL 1 H-2-77645 SH 1 & 2

TYPICAL FLUSH MOUNTED ANODE JUNCTION BOX ENCL INSTALLATION AJB(45-4) SHOWN, OTHERS SIMILAR

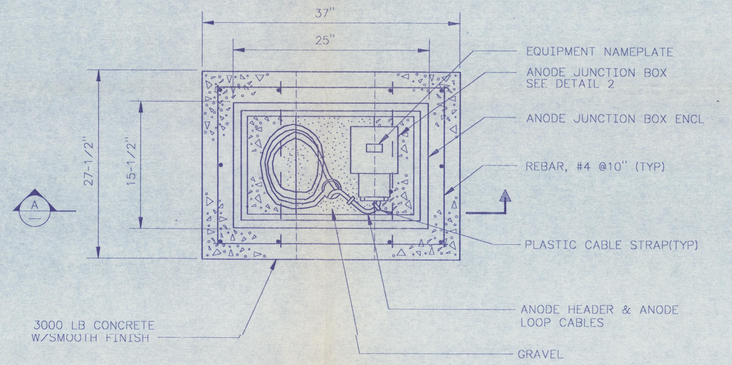

PLAN VIEW
(COVER REMOVED FOR CLARITY)

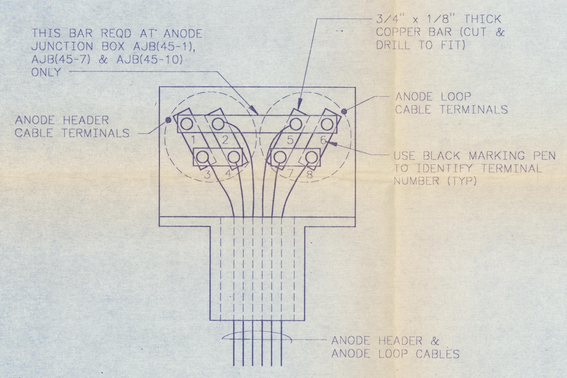

DETAIL 2

ANODE JUNCTION BOX TYPICAL CONNECTION DIAGRAM (SEE NOTE 1)

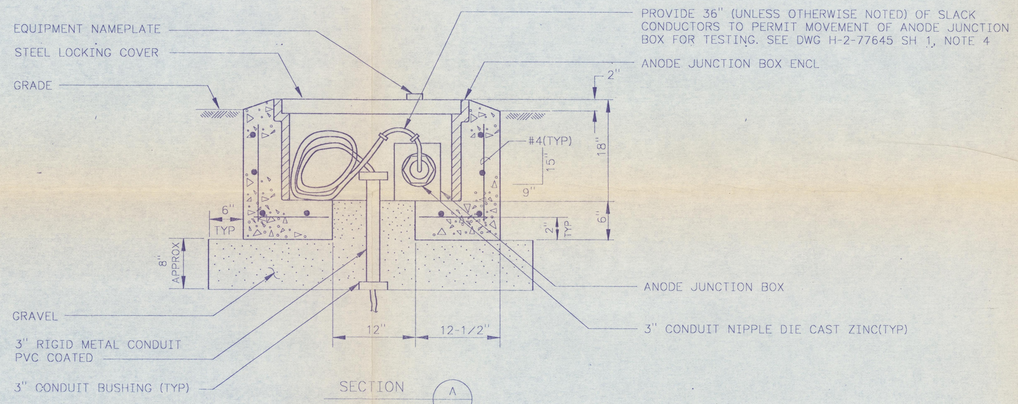

SECTION A

DETAIL 3

TYPICAL FLUSH MOUNTED - ANODE JUNCTION BOX ENCL

NOTES:

1. SEE CONSTRUCTION SPECIFICATION B-714-C2 FOR MATERIAL DESCRIPTION AND INSTALLATION INSTRUCTIONS.
2. ABBREVIATIONS ARE PER ANSI Y1.1 UNLESS OTHERWISE NOTED.
3. 1a PROVIDE AND INSTALL (1) 100AF, 20AT, 3P MOLDED CASE CIRCUIT BREAKER IN EXISTING DISTRIBUTION PANELBOARD D-PB-01 CIRCUIT SPACE 9. MATCH EXISTING CIRCUIT BREAKER TYPE. ADD "CP RECTIFIER R-33 & R40" TO PANELBOARD DIRECTORY CIRCUIT SPACES 7,9 & 11.

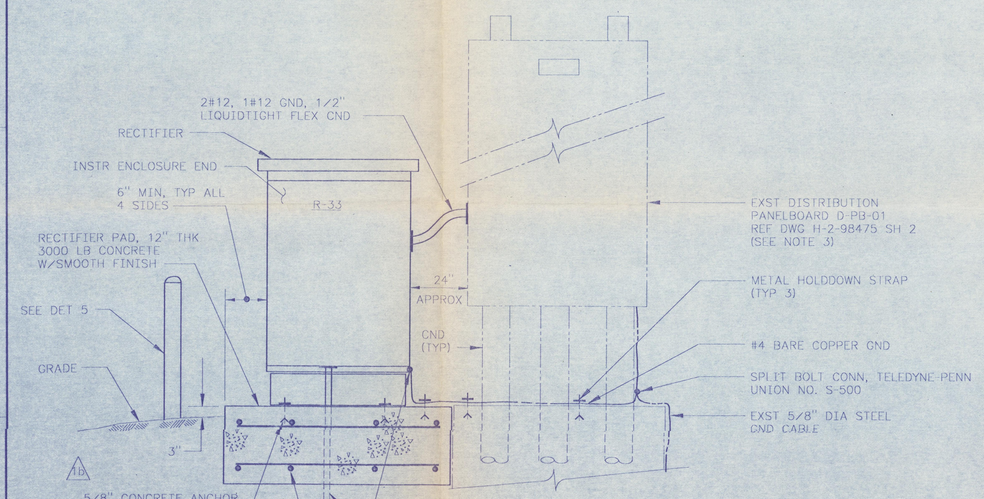

DETAIL 4 H-2-77645 SH 1

RECTIFIER INSTALLATION

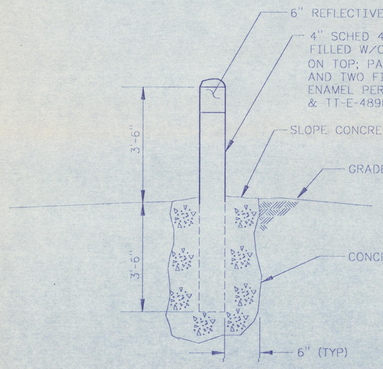

DETAIL 5

GUARD POST TYP FRONT & BACK EDGE OF RECTIFIER

NUMBER	TITLE
H-2-98475	SH 2- ELECTRICAL DETAILS
H-2-77573	DRAWING LIST

DRAWING TRACEABILITY LIST

REFERENCES — NEXT USED ON H-2-77573

REV	DESCRIPTION	REV BY DATE
M	b)B-714-53,ZAB a)B 714-42,ZE1-F3,C2 THRU B-714-61 GENL REV; INCORP ALL ECN'S	7-13-90 RST

REVISIONS

MICROFILMED — BY-DATE — WHC APPROVAL — KEH APPROVAL — COMMENT REVIEW

DOES NOT CONTAIN CLASSIFIED OR UNCLASSIFIED CONTROLLED NUCLEAR INFORMATION

Reviewing Official/ADC
Kaiser Engineers Hanford Company
11-26-90
Date

JAN 1991 RECEIVED EDMC

CHARLES L. SUBLETT — STATE OF WASHINGTON — REGISTERED PROFESSIONAL ENGINEER

EDT# 101089		IMPACT LEVEL 3			
WHC APPROVAL	DATE	U.S. DEPARTMENT OF ENERGY RICHLAND OPERATIONS OFFICE			
BY MD NORTHY	11-4-1988	KAISER ENGINEERS HANFORD COMPANY			
PROJ ENGR JD CLOUD	11-4-1988	M ELECTRICAL CATHODIC PROTECTION DETAILS			
CA JE BREED	8-3-1988				
APPROVED BY RM ITEN	8-3-1988				
SAFETY D PARTHREE	8-1-1988				
APPROVED BY ARS C SUBLETT	8-1-1988	PROJECT TITLE			
CHECKED BY GP MCDONALD	8-1-1988	GROUT VAULT PAIR 218-E-16-102 & 103			
DRAWN BY JLB LS JONES	3-17-1988	PROJ B-714	WO ER1060	SUBJ	
DESIGNED BY WC ATKINS	3-17-1988	SCALE NONE	W.B.NO 218-E-16	INDEX 7801	
CAD FILE B077646A		DRAWING NUMBER H-2-77646	SHEET 1	OF 1	REV 1
CAD CODE 2J:SUN:ACD2:10.0:NN					

KEHOAD

001213