QTY	PT. NO.	DESCRIPTION	MAT/REF
X	1	ASSEMBLY	
1	2	PLATE, 11" DIA x 1/4" THK	300 SERIES SST
2	3	PLATE, 3/4 W x 1 1/2 LG x 1/8	
AR	4	TUBING, 1/4, .035 WALL	
AR	5	TUBING, 1/2, .065 WALL	

CAUTION
NOT COMPLETE WITHOUT
CURRENT STATUS OF OUTSTANDING
ECNS FROM DATA BASE

MAR 24 1993

0031030

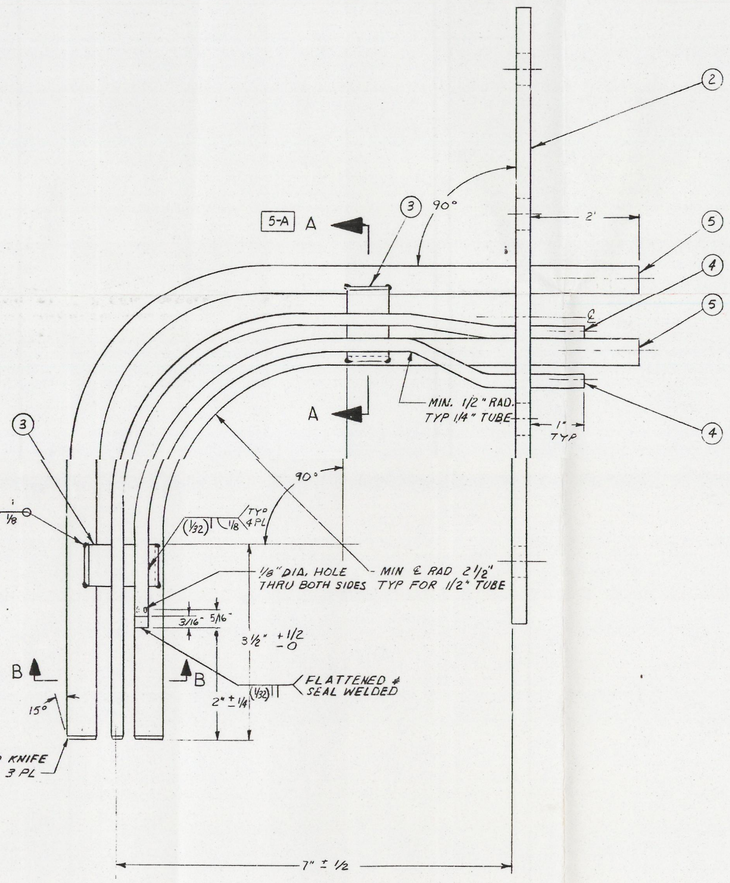

1 ASSEMBLY

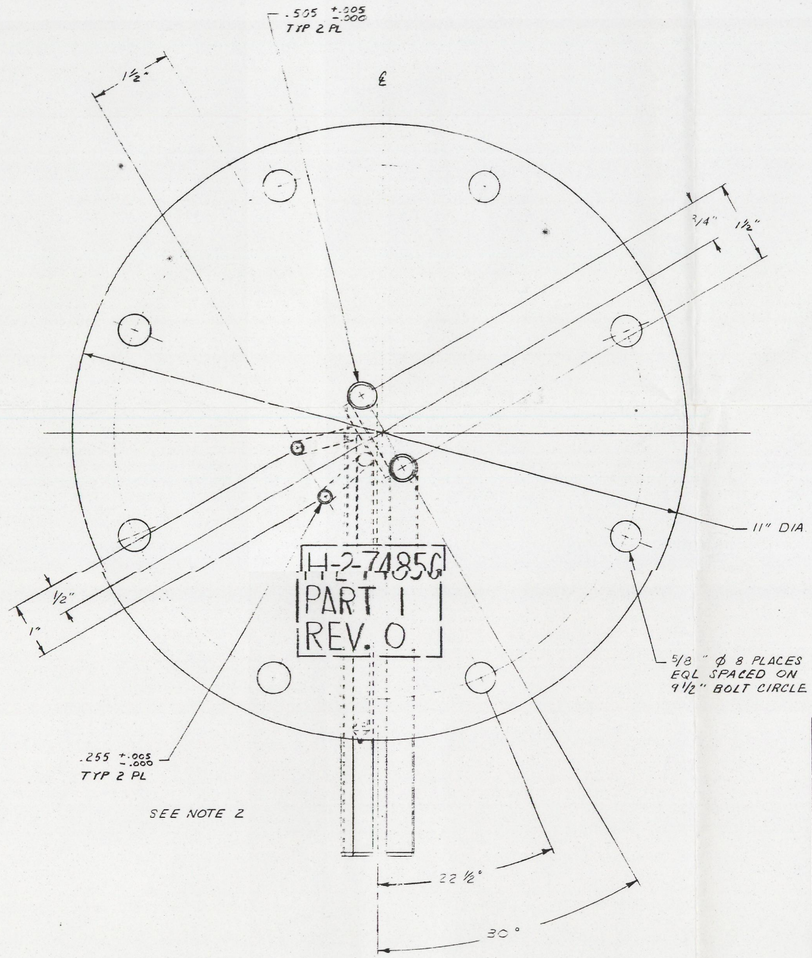

GENERAL NOTES

1. PROBE IS SIZED TO PROVIDE NEAR ISOKINETIC SAMPLING AT 2.2 CFM SAMPLE EXTRACTION RATE AND 2888 FPM STACK FLOW VELOCITY.
2. IDENTIFY ASSEMBLY PART NO. 1 PER HS-BS-0015, TYPE 8, WITH DRAWING NO., PART NO., AND DRAWING REV. NO. IN LOCATION INDICATED, USING .50 MIN. HIGH BLACK CHARACTERS.

WELDING AND INSPECTION REQUIREMENTS

FABRICATION	1. WELDING STANDARD	☐ ASME ■ ANSI B 31.3 ☐ AWS ■ HS-BS-0013 OPTIONAL (IN-HOUSE)	
	2. PROCEDURE SPEC. & PERFORMANCE CERT.	■ ASME SECTION IX ☐ AWS	
	3. FILLER MATERIAL	■ ASME SECT. II/AWS AS	
INSPECTION	4. VISUAL (VT)	■ WELDING STD. IN (1) ■ FITUP ☐ ROOT PASS ■ FINAL	■ SPP 2.5.0-8 (IN HOUSE)
	5. PENETRANT (PT)	☐ WELDING STD. IN (1)	
	6. MAGNETIC PARTICLE (MT)	☐ WELDING STD. IN (1)	
	7. ULTRASONIC (UT)	☐ WELDING STD. IN (1)	
	8. RADIOGRAPH (RT)	☐ WELDING STD. IN (1)	
	9. LEAK TEST (LT)	☐	
☐ OTHER REQTS.			

Rockwell Hanford Operations

RELEASE ENGINEERING ORDER DEO-10305 SA-3000-589 (R-1-79)
RELEASE DATE 12-2-83 REV. A000
☐ INFORMATION
☐ AUTHORIZED
☐ CONTROLLED
☐ CONSTRUCTION WORK ORDER
☐ ATTACHMENTS NOT REQUESTED
THIS DOCUMENT IS NOT COMPLETE WITHOUT THE FOLLOWING ATTACHMENTS:

UNLESS OTHERWISE SPECIFIED DIMENSIONS ARE IN INCHES
TOLERANCES ON:
DECIMALS ANGLES FRACTIONS
.XX ±.03 ±° 1° ± 1/32
.XXX ±.010
DO NOT SCALE PRINT

SD-6400-134 (R-10-83)

REVIEW NUMBER 1 2 3 4
THIS DRAWING HAS BEEN APPROVED BY A ROCKWELL DOCUMENT REVIEW BOARD.
REVISION NO. 0
CHAIRMAN J. Cammann DATE 11/30/83

QUALITY ASSURANCE LEVEL I

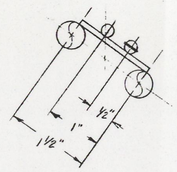

SECTION B-B 13-C

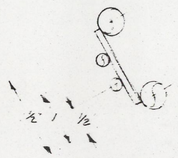

SECTION A-A 11-E

HS-BS-0015	IDENTIFICATION
HS-BS-0013	WELDING

REFERENCE DRAWINGS
NEXT USED ON H-2-74855 SH 1

REVISIONS						
QUALITY ASSURANCE	RESPONSIBLE ENGINEER	DRAFTING	CHKD BY DATE	REV BY DATE	DESCRIPTION	REV NO.
REVISION APPROVALS						LAST REV. 0

COMMENT PRT ISSUE NO. 1 11/17/83 DATE | CHECK PRT. ISSUE NO. 1 11/17/83 DATE
DRAWING STATUS D.T.-E485

DRAWING APPROVALS	DATE
APPROVED QUALITY ASSURANCE F. E. McGrath	11/17/83
APPD. (1) (2) Flagstad	11/14/83
APPD. (1) (2) (3) L. D. Rick	11/16/83
R. L. Stanton	11/16/83
RESPONSIBLE ENGINEER R. L. STANTON	
DRAFTING APPD.	
D. D. Tilley	11/17/83
D. R. Hanchen	11/17/83
CLASSIFICATION NONE	UNCLASSIFIED NOT REQD

U. S. Department of Energy
Richland Operations Office
Rockwell Hanford Operations
Richland, Washington 99352

296-B-13
STACK MONITOR
PROBE ASSEMBLY

SCALE	BLDG NO.	INDEX NO.
1:1	221-BF	5901
DRAWING NO. H-2-74856	SHEET NO. 1	SHEETS 1

SEP 1993 RECEIVED EDMC

START

0031030

EXTRACTION RATE AND 2888 FPM STACK FLOW VELOCITY.

2. IDENTIFY ASSEMBLY PART NO. 1 PER HS-BS-0015, TYPE B, WITH DRAWING NO., PART NO., AND DRAWING REV. NO. IN LOCATION INDICATED, USING .50 MIN. HIGH BLACK CHARACTERS.

11" DIA

" ϕ 8 PLACES
. SPACED ON
" BOLT CIRCLE

WELDING AND INSPECTION REQUIREMENTS			
FABRICATION	1. WELDING STANDARD	☐ ASME ■ ANSI B 31.3 ☐ AWS	■ HS-BS-0013 OPTIONAL (IN-HOUSE)
	2. PROCEDURE SPEC. & PERFORMANCE CERT.	■ ASME SECTION IX ☐ AWS	☐
	3. FILLER MATERIAL	■ ASME ☐ CT II AWS AS	☐
INSPECTION	4. VISUAL (VT)	■ WELDING STD. IN (1) ■ FITUP	■ SPP 2.5.0-B (IN HOUSE) ☐ ROOT PASS ■ FINAL
	5. PENETRANT (PT)	☐ WELDING STD. IN (1)	☐
	6. MAGNETIC PART. (MT)	☐ WELDING STD. IN (1)	☐
	7. ULTRASONIC (UT)	☐ WELDING STD. IN (1)	☐
	8. RADIOGRAPH (RT)	☐ WELDING STD. IN (1)	☐
	9. LEAK TEST (LT)	☐	
☐ OTHER REQTS.			

Rockwell Hanford Operations

RELEASE ENGINEERING ORDER REO-10305 SA-3000-000 (R-1-79)
RELEASE DATE 12-2-83 REV. 4000
☐ INFORMATION
☐ AUTHORIZED
☐ CONTROLLED
☐ CONSTRUCTION WORK ORDER
☐ ATTACHMENTS NOT REQUESTED
THIS DOCUMENT IS NOT COMPLETE WITHOUT THE FOLLOWING ATTACHMENTS:

SD 6400-134 (R 10-83)

REVIEW NUMBER	1	2	3	4

THIS DRAWING HAS BEEN APPROVED BY A ROCKWELL DOCUMENT REVIEW BOARD.
REVISION NO. 0
CHAIRMAN J. Cameron DATE 11/30/83

UNLESS OTHERWISE SPECIFIED DIMENSIONS ARE IN INCHES

TOLERANCES ON:

DECIMALS	ANGLES	FRACTIONS
.XX ±.03	±° 1°	± 1/32
.XXX ±.010		

DO NOT SCALE PRINT

QUALITY ASSURANCE LEVEL I

DRAWING APPROVALS	DATE
APPROVED FOR QUALITY ASSURANCE F. E. Hickerson	11/9/83
APPD. 1 S S I C Hagelmann	11/9/83
APPD. L D Rick	11/9/83
APPD. R. F. Stanton	11/10/83
R.L. STANTON	
SIGNATURE APPD. A. P. [illegible]	
DRAWN A. A. Tilley	11/7/83
DRAWN G. K. Hamilton	11/7/83
CLASSIFICATION NONE	NOT REQD

U. S. Department of Energy
Richland Operations Office
Rockwell Hanford Operations
Richland, Washington 99352

296-B-13
STACK MONITOR
PROBE ASSEMBLY

SCALE	BLDG. NO.	DWG. NO.
1:1	221-BF	5901

DRAWING NO. H-2-74856 SHEET NO. 1 SHEETS 1

REV.	DESCRIPTION	LAST REV.
0	CHECK PRT. ISSUE NO. 1 11/7/83 DATE	
	D.I.-E485	

3 2 1

SEP 1993
RECEIVED
EDMC

9413096.0612