1243831
[0071512H]
HNF-19589
REV. 0

Data Quality Objectives Summary Report for D&D of the 224-B Facility

Prepared for the U.S. Department of Energy
Assistant Secretary for Environmental Management

Fluor Hanford
P.O. Box 1000
Richland, Washington

Contractor for the U.S. Department of Energy
Richland Operations Office under Contract DE-AC06-96RL13200

RECEIVED
APR 19 2017
EDMC

Approved for Public Release
(Upon receipt of Clearance approval)
Further Dissemination Unlimited

200-CB-1

76

HNF-19589
REV. 0

For use with Technical Documents (when appropriate)	
EDC- HNF-EDC-04-20104	FMP-
EDT-	ECN-
Project No.: DD-224B	Division:
Document Type: RPT	Page Count: 136 CL 3-10-04

For use with Speeches, Articles, or Presentations (when appropriate)							
Abstract		Summary		Full Paper		Visual Aid	
Conference Name:							
Conference Date:							
Conference Location:							
Conference Sponsor:							
Published in:							
Publication Date:							

RECEIVED
APR 19 2017
EDMC

LEGAL DISCLAIMER

This report was prepared as an account of work sponsored by an agency of the United States Government. Neither the United States Government nor any agency thereof, nor any of their employees, nor any of their contractors, subcontractors or their employees, makes any warranty, express or implied, or assumes any legal liability or responsibility for the accuracy, completeness, or any third party's use or the results of such use of any information, apparatus, product, or process disclosed, or represents that its use would not infringe privately owned rights. Reference herein to any specific commercial product, process, or service by trade name, trademark, manufacturer, or otherwise, does not necessarily constitute or imply its endorsement, recommendation, or favoring by the United States Government or any agency thereof or its contractors or subcontractors. The views and opinions of authors expressed herein do not necessarily state or reflect those of the United States Government or any agency thereof.

Scientific or technical information is available to U.S. Government and U.S. Government contractor personnel through the Office of Scientific and Technical Information (OSTI). It is available to others through the National Technical Information Service (NTIS).

This report has been reproduced from the best available copy.

Printed in the United States of America

RECORD OF REVISION	(1) Document Number HNF-19589	Page 1

(2) Title
Data Quality Objectives Summary Report for D&D of the 224-B Facility

Change Control Record

(3) Revision	(4) Description of Change - Replace, Add, and Delete Pages	Authorized for Release		
		(5) Cog. Engr.	(6) Cog. Mgr.	Date
0	(7) Initial Release			3/10/04

A-7320-005 (10/97)

HNF-19589
REV. 0

Data Quality Objectives Summary Report for D&D of the 224-B Facility

MW Gibson, Fluor Hanford

DL Klages, Fluor Hanford

February 2004

Prepared for the U.S. Department of Energy
Assistant Secretary for Environmental Management

Fluor Hanford
P.O. Box 1000
Richland, Washington

Contractor for the U.S. Department of Energy
Richland Operations Office under Contract DE-AC06-96RL13200

3/10/04
Clearance Approval Date

DATE: MAR 10 2004
STA: 4
ID: 21
N/A
Release Approval (stamp)

Approved for Public Release
(Upon receipt of Clearance approval)
Further Dissemination Unlimited

CONTENTS

1.0 STEP 1 – STATE THE PROBLEM 1-1
1.1 INTRODUCTION 1-1
1.2 OBJECTIVE 1-1
1.3 PROJECT MILESTONES AND DATA QUALITY OBJECTIVE TEAM MEMBERS 1-1
1.4 PROJECT ASSUMPTIONS AND ISSUES 1-3
1.4.1 Project Assumptions 1-3
1.4.2 Global Issues 1-3
1.4.3 Project-Specific Technical Issues and Resolutions 1-3
1.5 EXISTING REFERENCES 1-4
1.6 PROCESS HISTORY AND FACILITY DESCRIPTION 1-4
1.6.1 Historical Description 1-4
1.6.2 Physical Description 1-5
1.7 CONTAMINANTS OF POTENTIAL CONCERN 1-26
1.8 COPC'S EXCLUSIONS and calculations 1-32
1.8.1 Contaminant of Potential Concern Exclusions 1-32
1.8.2 Contaminants of Concern to be Determined by Calculation 1-32
1.8.3 Final List of Contaminants of Concern 1-33
1.8.4 Final Waste Stream and Contaminant of Concern List 1-34
1.8.5 Anomalous Waste Materials 1-37
1.8.6 Waste Disposition Options 1-37
2.0 STEP 2 – IDENTIFY THE DECISION 2-1
2.1 PRINCIPAL STUDY QUESTIONS ALTERNATIVE ACTIONS AND DECISION STATEMENTS 2-1
3.0 STEP 3 – IDENTIFY INPUTS TO THE DECISION 3-1
3.1 INFORMATION REQUIRED TO RESOLVE DECISION STATEMENTS 3-1
3.2 ENGINEERING CALCULATIONS 3-5
3.3 DANGEROUS WASTE EVALUATION 3-5
3.4 ISOTOPIC EVALUATION 3-5
3.5 ANOMOLOUS WASTE 3-6
3.6 FIELD MEASUREMENT METHODS AND ANALYTICAL PERFORMANCE REQUIREMENTS 3-6
3.7 RADIOLOGICAL SURVEY PERFORMANCE REQUIREMENTS 3-10
4.0 STEP 4 – DEFINE THE BOUNDARIES OF THE STUDY 4-1
4.1 POPULATION OF INTEREST 4-1
4.2 ZONES WITH HOMOGENOUS CHARACTERISTICS 4-1
4.3 SPATIAL SCALE OF DECISION MAKING 4-1
4.4 TEMPORAL BOUNDARIES 4-1
4.5 PRACTICAL CONSTRAINTS 4-2
5.0 STEP 5 – DEVELOP DECISION RULEs 5-1
5.1 PARAMETER OF INTEREST 5-1
5.2 FINAL ACTION LEVELS 5-1
6.0 STEP 6 – SPECIFY TOLERABLE LIMITS ON DECISION ERRORS 6-1
6.1 DECISION ERRORS 6-1
6.2 NULL HYPOTHESIS 6-1
7.0 STEP 7 – OPTIMIZE THE DESIGN 7-1
7.1 FOCUSED SAMPLE DESIGN 7-1
7.2 SPECIFIC MEDIA SAMPLING 7-1
7.3 NONDESTRUCTIVE ASSAY 7-3
7.4 RADIOLOGICAL SURVEYS 7-4

7.4.1 Routine Radiological Surveys 7-4
7.4.2 Percent Profile Verification Surveys 7-4
7.4.3 Material Release Surveys for Reuse 7-4
7.5 ANOMALOUS WASTE MATERIALS 7-5
7.6 CONTAMINATED SOIL SAMPLES 7-5
7.7 INSPECTION OF PIPING ENTERING/EXITING FACILITY 7-5
7.8 COORDINATION WITH INITIAL CELL ENTRIES 7-5
8.0 REFERENCES 8-1

FIGURES

Figure 1-1. 224-B facility exploded view 1-6
Figure 1-2. 224-B Facility First Floor Schematic 1-7
Figure 1-3. 224-B Facility Second Floor Schematic. 1-8
Figure 1-4. 224-B Facility Third Floor Schematic. 1-9
Figure 1-5. 224-B facility waste lines. 1-13
Figure 1-6. 224-B Process Flowsheet Block Diagram. 1-15
Figure 1-7. 224-B Bismuth Phosphate Precipitation and Crossover Steps Block Diagram. 1-16
Figure 1-8. 224-B First Lanthanum Fluoride Precipitation Step Block Diagram. 1-17
Figure 1-9. 224-B Second and Third Lanthanum Fluoride Precipitation Step Block Diagram. 1-18
Figure 1-10. 224-B Metathesis and Product Loadout Step Block Diagram. 1-19

TABLES

Table 1-1. DQO Team Members. 1-2
Table 1-2. DQO Key Decision-Makers. 1-2
Table 1-3. Existing Historical References. 1-4
Table 1-4. Feed from 221-U. 1-20
Table 1-5. Recycle Solutions from 231-Z. 1-20
Table 1-6. Chemicals Used In 224-B Concentration Process and Flushes 1-20
Table 1-7. Waste Solutions from 224-B Processing 1-21
Table 1-8. Process Chemicals In Tanks and Equipment 1-21
Table 1-9. Transuranic Inventory In 224-B Cells (grams). 1-25
Table 1-10. Inventory in 224-B Cells Tanks and Centrifuges (grams). 1-25
Table 1-11. Summary Average Radionuclide Contamination Levels In 224-B Cells 1-26
Table 1-12. Waste Streams and Contaminants of Potential Concern. 1-28
Table 1-13. Radiological Contaminants of Potential Concern. 1-31
Table 1-14. Chemical Contaminants of Potential Concern. 1-31
Table 1-15. Contaminant of Potential Concern Exclusions 1-32
Table 1-16. Contaminants of Concern to be Determined by Calculation 1-33
Table 1-17. Final Contaminant of Concern List 1-33
Table 1-18. Final Waste Streams and Contaminants of Concern. 1-35
Table 2-1. Summary of DQO Step 2 Information. 2-1
Table 3-1. Required Information and Reference Sources. 3-2
Table 3-2. Analytical Performance Requirements for Solid/Other Materials. 3-6
Table 3-3. Analytical Performance Requirements for Liquid Materials. 3-8
Table 3-4. Radiological Survey Instrument Performance Requirements. 3-10
Table 3-5. Analytical Performance Requirements for NDA. 3-12

Table 4-1. Characteristics that Define the Population of Interest 4-1
Table 4-2. Temporal Boundaries of the Investigation. 4-2
Table 4-3. Practical Constraints on Data Collection. 4-2
Table 5-1. Concentration Limits – Environmental Restoration Disposal Facility. 5-1
Table 5-2. Action Levels – Dangerous Waste Limits – WAC 173-303. 5-2
Table 5-3. Analytical Requirements – Effluent Treatment Facility. 5-3
Table 5-4. Action Limits – Recycling Requirements for Used Oil. 5-4
Table 5-5. Summary of Surface Contamination Values[1] 5-4
Table 5-6. Analytical Methods and Action Levels for NDA.[a] 5-5
Table 6-1. Defining the Null Hypothesis 6-1
Table 7-1. Specific Media Sampling. 7-1

EXECUTIVE SUMMARY

This data quality objective (DQO) summary report establishes the data needs and defines the sampling and analysis requirements to characterize the facility and the waste materials that will be generated during decontamination and decommissioning (D&D) of the 224-B building. This D&D project is a CERCLA non-time critical removal action defined in the 224-B Engineering Evaluation/Cost Analysis. The D&D work will be performed per a Removal Action Work Plan subsequent to publication of an Action Memorandum. The purpose of the D&D activities is to safely dismantle the facility and dispose of the demolition waste in a safe, appropriate, and cost-effective manner.

The DQO process uses information from historical files, deactivation files, facility inspection records, process knowledge, key decision maker interviews, and other relevant sources to identify anticipated waste streams from the facility. The waste stream information is used to develop a list of the contaminants of concern and the anticipated sampling and analysis needs to support safe demolition activities and disposition of the waste materials.

The DQO process proposes a characterization strategy to provide the necessary information to support D&D activities. As needed, samples will be collected from specific worst-case contaminant locations and used to establish the bounding contaminant concentrations and waste designation information.

This DQO also includes the requirements for collection of specific, limited data on subsurface soil under or near the 224-B facility. Samples and data requirements are defined to allow information to be gathered to support advanced planning efforts for the final site remediation, which is beyond the scope of this non-time critical removal action for the 224-B facility.

1.0 STEP 1 – STATE THE PROBLEM

1.1 INTRODUCTION

The 224-B Facility was used to purify and concentrate the plutonium nitrate product from the 221-B separations facility. Operations ceased in 1952 and no further processing was performed at the facility. Operational reports from 1953 indicate the process was shut down normally, and documentation specifically states that process equipment and lines were flushed and drained. However, besides radionuclide contamination, residual amounts of process chemicals, acids and caustics may remain in the facility. The remaining inventory of radionuclides and process chemicals has not been well established.

The preferred alternative for the remediation of the facility is to remove equipment and materials from the building, then demolish the structure to a slab on grade condition. The bulk of the waste and debris will be disposed at the ERDF.

Problem Statement

The volume and concentrations of chemicals and radionuclides in waste materials are not well defined but are needed to allow execution of the preferred alternative for facility disposition.

1.2 OBJECTIVE

The scope of the 224-B D&D Data Quality Objectives (DQO) process is to identify the sampling and analytical requirements to support the selected non-time-critical removal action for the disposition of the facility under the CERCLA process. The proposed removal action is to remove waste and equipment from the building and demolish the structure to a slab on grade condition. Therefore the scope of this DQO process encompasses the former processing operation equipment/systems, facility support systems, structures and components in the 224-B facility above the slab level.

In addition, EPA and RL have agreed that collection of soil samples beneath the 224-B slab is warranted to provide information for forward planning for future site remediation. This data collection is beyond the scope of the CERCLA action for the 224-B but is included in this DQO for completeness.

The key objectives are to determine sufficient information about the facility to make informed decisions on the disposition of the waste streams from the D&D tasks, to protect D&D workers and the environment, to support safety analyses, and to allow selection of the optimum D&D methods for each step of the deactivation and demolition process. The nature and extent of chemical and radionuclide contamination within the equipment and structure must be determined to a level adequate for decision making. This level of knowledge must be established prior to preparing a Sampling and Analysis Plan that provides the specifics of the required sample gathering and analytical work. The required level of knowledge may be satisfied by process knowledge and historical data, sampling to verify existing data, by selecting representative equipment or areas for sampling, or by more extensive sampling plans.

1.3 PROJECT MILESTONES AND DATA QUALITY OBJECTIVE TEAM MEMBERS

The major project milestone is to demolish the 224-B structure to a slab-on-grade condition by September 30, 2006.

Tables 1-1 and 1-2 identify the individual members of the DQO team and the key decision-makers. Some DQO members may or may not have participated directly in the planning sessions but offered expertise throughout the process. These tables also identify the organization that each DQO team member or key decision maker represents, as well as their technical area of expertise.

Table 1-1. DQO Team Members.

Name	Organization	Role and Responsibility
M. R. Morton	Polestar	Characterization Subject Matter Expert
D. L. Klages	FH	Project Environmental Lead
M. W. Gibson	FH	Project Engineer
D. D. Jacques	CHI	DQO Facilitator
J. W. Hasson	FH	Waste Management
D. L. Moder	FH	Waste Management
G. G. Hopkins	BHI	Waste Interface w/ERDF
D. B. Encke	CHI	Historical Subject Matter Expert
D. S. Mantooth	FH	Radiological Engineer
C. R. Haas	Polestar	Project Engineer/Coordination w/224-T/B
G. J. LeBaron	FH	Regulatory Lead/Coordination w/224-T/B

BHI = Bechtel Hanford, Inc.
FH = Fluor Hanford Company
CHI = CH2M Hill Hanford, Inc.

Table 1-2. DQO Key Decision-Makers.

Name	Organization
F. W. Bond	Washington State Department of Ecology
C. E. Cameron	U.S. Environmental Protection Agency
E. B. Dagan	U.S. Department of Energy, Regulatory Compliance
P. J. Valcich	U.S. Department of Energy, Plateau Transition Division
L. D. Romine	U.S. Department of Energy, Plateau Transition Division

1.4 PROJECT ASSUMPTIONS AND ISSUES

The project assumptions and issues described below are based on project team discussions from regular meetings and input during the DQO document review. Also, interviews with the key decision makers were held to provide a forum for eliciting their ideas and issues for inclusion in the DQO process.

1.4.1 Project Assumptions

1. The project has extensive historical characterization data associated with the chemical processing operations during the time the facility was in operation. The data will be adequate to establish the primary sources of contamination to support the generation or revision of waste profiles for structural features and residual materials in vessels/equipment within the scope of this project.

2. The project has extensive historical design data associated with the construction of the facility. The data, along with that from item 3 below, will be adequate to establish the primary sources of contamination to support the generation or revision of one or more waste profiles for all structural features in the scope of this project.

3. For the purpose of this DQO summary report, the footprint of the building is bounded by the exterior walls and the slab on grade. The pit in cell C and the pipe chase under the building slab are also included. A limited amount of sampling under the slab or adjacent to the building foundation, is proposed to provide advance information to the decision process for future site remediation, beyond the scope of this removal action. This will assist in continuity to accomplish a path forward to site disposition.

4. The closure of the facility site is not within the scope of this DQO summary report. Interim and final closure of the facility site will be handled in subsequent documentation prepared for the Decommissioning Project or Remedial Action Project.

1.4.2 Global Issues

There are three global issues identified by the U.S. Department of Energy, Richland Operations Office (RL); the U.S. Environmental Protection Agency (EPA); and the Washington State Department of Ecology (Ecology).

- Scope of sampling needed, specifically in regards to data from areas outside of the building structure and below the slab on grade end state boundary

- Path forward planning for the 224-B site after this action is complete and integration with future area closure activities

- Nearby waste sites that may impact the 224-B building

1.4.3 Project-Specific Technical Issues and Resolutions

The technical issues identified for this project are described below:

1. The use of radiological surveys and swipes to provide field screening for determination of TRU vs. non-TRU materials needs to be established.

Resolution: The DQO will provide for NDA sampling that can be correlated with visual observations, radiological samples and laboratory results to set a conservative level where material can be determined to meet criteria for non-TRU waste disposition paths.

2. *Disposition of tanks and process equipment without size reduction, using appropriate stabilization methods to meet shipping and waste acceptance criteria, needs to be maximized for ALARA and cost/schedule reasons.*

Resolution: The DQO will specify that engineering calculations along with specific sampling may be used to meet the applicable WAC. Operators of the waste disposal site(s) will be contacted and a consensus developed on the methods needed to ship and dispose of large tanks and equipment with a minimum amount of size reduction.

1.5 EXISTING REFERENCES

The documents identified in Table 1-3 were used to support the description, process history, deactivation activities and previous sampling/analysis of sediments and liquids within the main effluent collection points in each facility addressed in this DQO process.

Table 1-3. Existing Historical References.

Reference	Summary
Gould, J. I., 1985, Radiological Characterization of the 224B Hot Cells, SD-DD-TRP-002, Revision 0, Westinghouse Hanford Company, Richland Washington	Detailed results from D&D characterization performed in the mid-1980s. Includes radiological surveys for surface contamination, air sampling, and area dose, as well as NDA for transuranic contents of tanks and centrifuges.
Speer, D. R., 1988, *Management Of Process Tanks And Lines In 224-B Building*, Letter No. 2240-88-049, D&D Engineering, D. R. Speer to L. A. Garner, March 22, 1988, Westinghouse Hanford Company, Richland Washington	Statement that the facility tanks and vessels were flushed and rinsed during the planned shutdown activities.
GE, 1951, *Flowsheets for Precipitation Processes*, HW-23043	Detailed process flowsheets of chemical constituents, material balances, and process parameters.

1.6 PROCESS HISTORY AND FACILITY DESCRIPTION

1.6.1 Historical Description

The 224-B Concentration Facility was used to purify and concentrate product plutonium nitrate solution from the 221-B Separations Facility bismuth-phosphate process. From the 224-B facility, the concentrated solution was shipped to the 231-Z Isolation Building in the 200 West Area of the Hanford Site. Plutonium concentration operations were performed in conjunction with 221-B separations activities from approximately 1944 to 1952. The building's process components were deactivated shortly thereafter.

Following deactivation of the 224-B Building, the loadout area was converted to a regulated workshop. Office space was constructed on the gallery side of the facility during this timeframe. D&D work was initiated in early 1980s and a number of tanks and other equipment were removed from the galleries.

1.6.2 Physical Description

The facility description is based on historical documents, drawings, and observations. The as-built condition of the building and equipment has not been systematically established. The descriptions and illustrations are considered to be general information and are used for illustrative purposes only.

Layout of 224-B

The 224-B Building consists of a single canyon-type building. The building is constructed of reinforced concrete and concrete block (Figure 1-1). The first and second floors have outside dimensions of approximately 197 ft by 60 ft; the third floor is 145.5 ft by 60 ft. The outer walls that surround the process cells are 1-ft-thick concrete. The building is divided into two main sections (along its length) by a 1-ft-thick concrete wall. Offices and galleries are located on one side of the dividing wall, and the processing cells are located on the other side. Figures 1-2 through 1-4 depict a plan of the three floors in the 224-B Building.

Figure 1-1. 224-B facility exploded view.

Figure 2-1. 224-B Building.

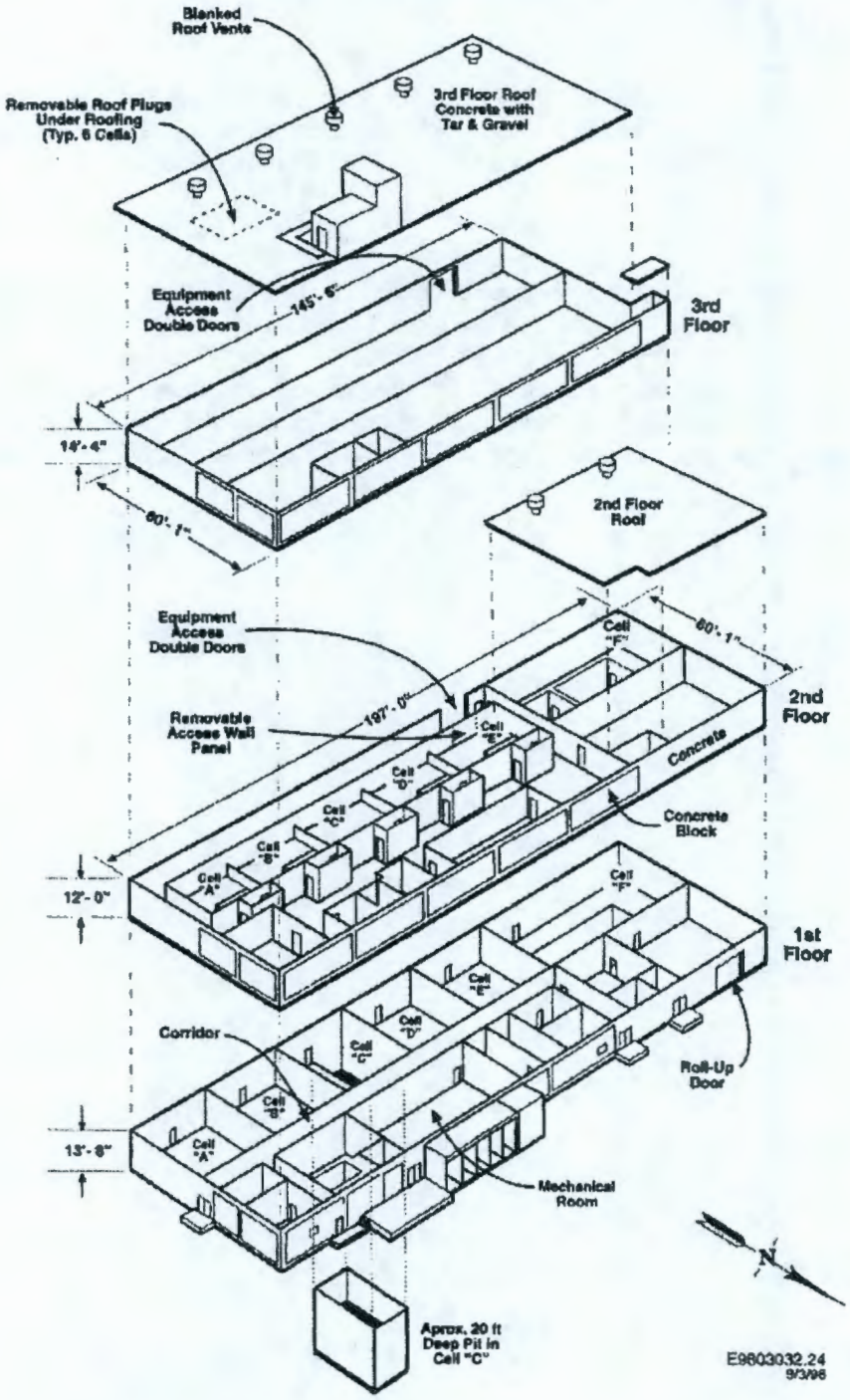

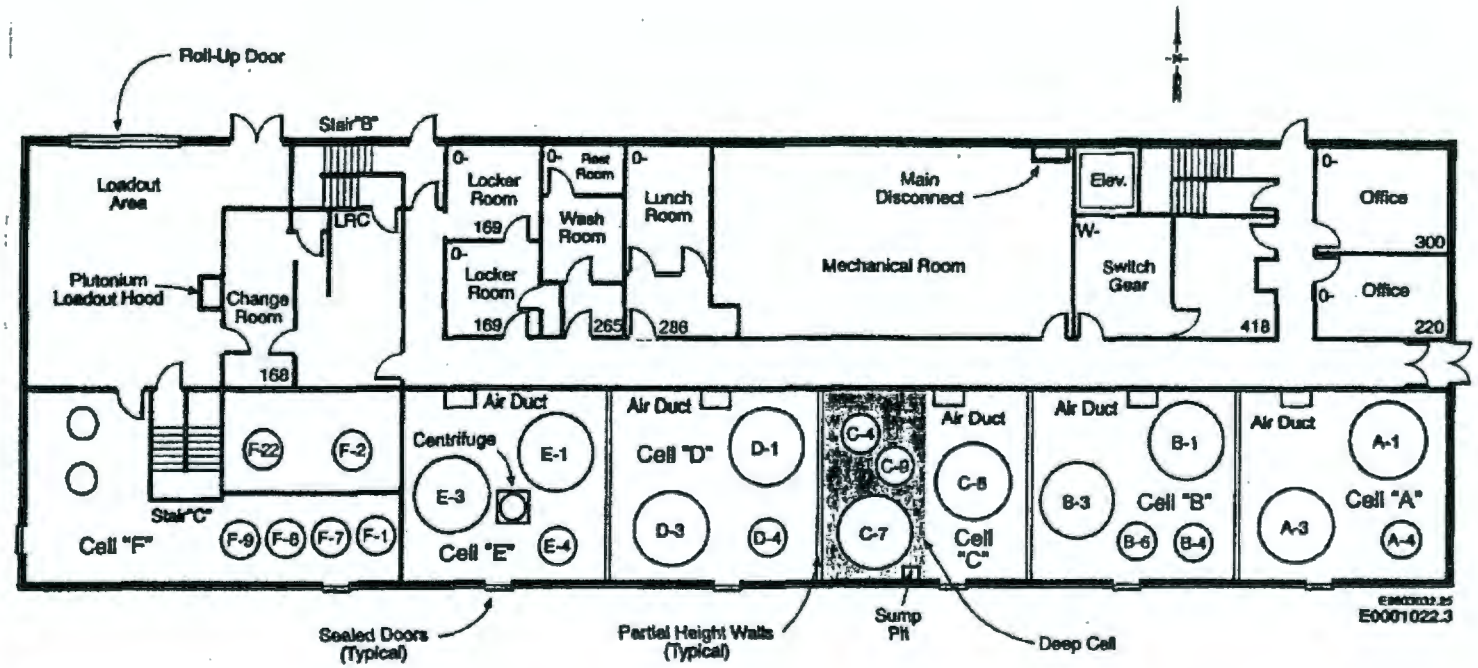

Ref. Drawing: W-72500
For Illustrative Purposes Only

Figure 1-2. 224-B Facility First Floor Schematic.

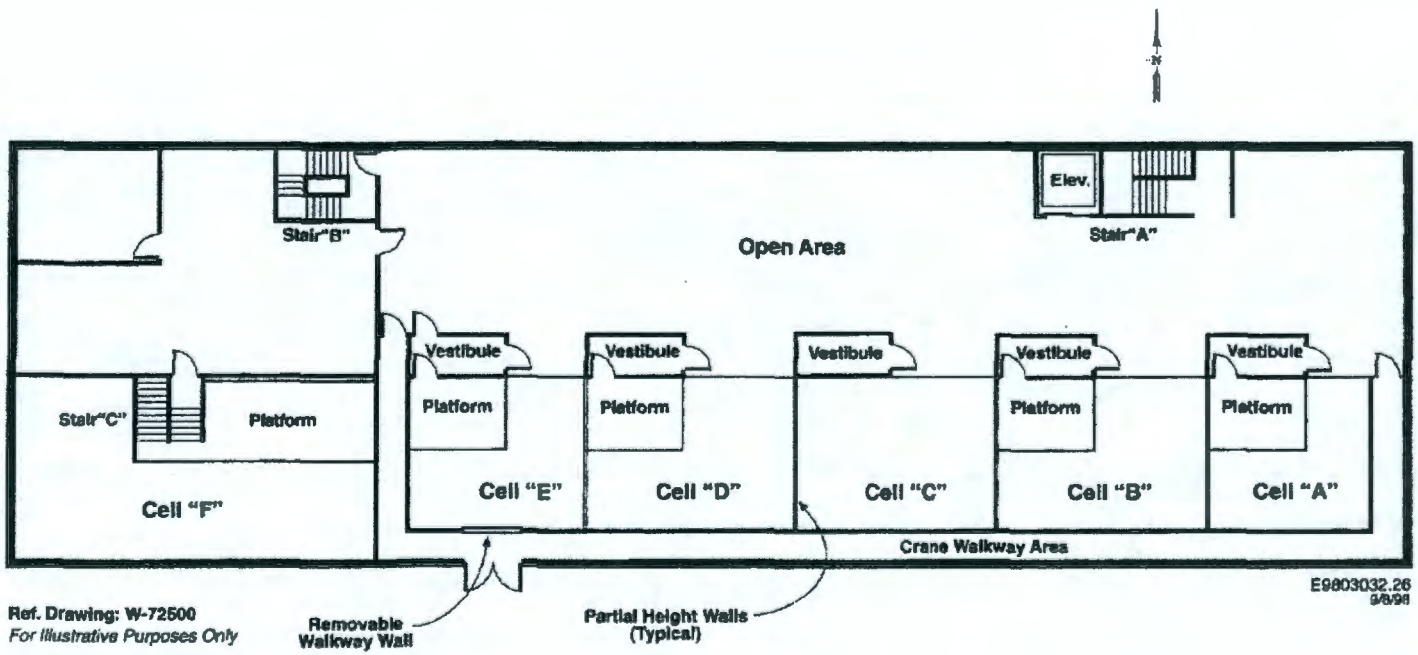

Figure 1-3. 224-B Facility Second Floor Schematic.

Figure 1-4. 224-B Facility Third Floor Schematic.

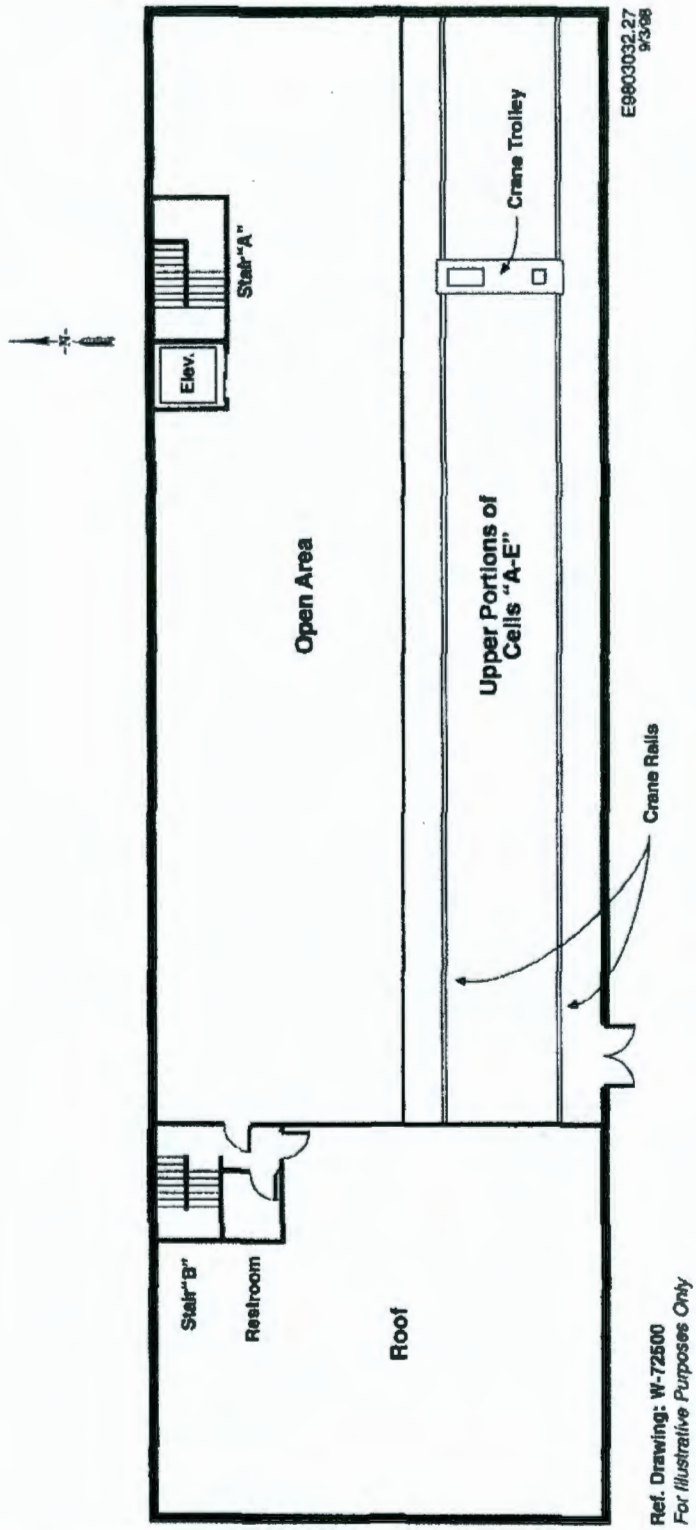

Gallery Side

The first floor of the office and gallery portion of the building is 13 ft high and contains vacant offices and a restroom, change room, lunchroom, and mechanical room. The mechanical room housed the air supply equipment and the motor control centers for the process equipment. A room at the west end of the building was used as a product (plutonium) loadout area (also known as the regulated workshop, truck bay, and maintenance shop).

A 4-in.-thick by 3-ft-wide by 2.67-ft-high stainless-steel slab tank (F-10 weigh tank) enclosed in a loadout hood (also known as the process hood) is located along the east wall of the loadout area. A 1999 inspection of the loadout hood indicated that it may have been decontaminated and stabilized (i.e., sprayed with a fixative) at the time of deactivation. Exterior joints and doors were taped and sprayed. The stainless-steel frame, reinforced-glass viewing windows, piping, and connections to the ventilation header appeared to be intact. No significant penetrating dose rates were observed during the 1999 inspection.

Following deactivation of the 224-B Building, the loadout area was converted to a regulated workshop. The loadout hood was isolated from the loadout area by a plywood enclosure. A large roll-up door was installed in an outside wall of the loadout area.

The 12-ft-high second floor of the gallery side of the building is a pipe gallery for cells A through E and an operating gallery for F cell. Aqueous makeup, steam and water piping, instrument and air tubing, and electrical conduit pass through the 1-ft-thick concrete wall from the pipe gallery to cells A through E. The east side of F cell is separated from the office area by a 1-ft-thick concrete wall, and the west side is separated from the loadout area by a metal partitioning wall. The piping passes through "windows" that were left in the wall when the wall structure was poured. Following installation of the piping, the "windows" were cemented over to seal the cells from the gallery.

A sample room for each of cells A through E is located in the second-floor pipe gallery. This room also serves as an airlock to an operating deck in A, B, D, and E cells. The west end of the second-floor gallery was the operating area for F cell. This area contains panel boards and viewing windows into the cell. Pumps and aqueous makeup tanks for F cell originally installed in this gallery have been removed. The piping into the cell has been blanked on the gallery side of the metal partitioning wall that isolates the cell. The second floor was modified for use as an office area and lunchroom. The wood-frame and drywall walls in the pipe gallery and F cell operating gallery define these rooms.

The third-floor gallery was the operating gallery for cells A through E and contains deactivated aqueous makeup tanks, scales, pumps, and control panels for the five cells. Observation windows with movable shielded covers allowed viewing into the cells. An elevator on the gallery side of the building serves all three floors. The 4-ton elevator has a 7-ft-wide by 8-ft-high opening and provides access to the building from a concrete loading platform.

Process Cell (Canyon) Side

The 224-B Building contains six process cells designed to accommodate tanks, centrifuges, piping, instrumentation and services to the process. Cell C was the receiving cell for product solutions from the 221-B Building and wastes generated within the 224-B Building. Chemical processing of the crude product was performed in cells A, D, and E. The B cell was initially a standby cell but was also used to augment operations in D cell. The F cell was the final concentration area. At one time, there were plans to convert the west half of F cell into a process area designated as G cell; however, this modification was never implemented. The area north of F cell is known as the loadout area.

The process cells are identified as cells A through F and are located in the processing portion of the building as shown in Figure 1-2. The process vessels (and the process cells) serve to provide a measure of confinement for the radioactive inventory. Five of the cells (A through E) are three-stories high (40 ft) and are separated from each other by 15-ft-high, 8-in.-thick concrete walls. The dimension of each cell is approximately 25 ft by 28 ft. Four of these cells (A, B, D, and E) are similar in equipment and configuration. The first floor of each cell contains two 9-ft-diameter by 9-ft-tall tanks and one 4.5-ft by 7-ft-tall tank.

The B cell has an additional 4.5-ft by 7-ft-tall tank. Some of the tanks are equipped with deactivated agitators. Cells A, B, D, and E also have a 10-ft by 12-ft operating deck at the second-floor level. Access to the decks is through the sample rooms in the second-floor pipe gallery. The sample room doors are steel and are sealed with tape to minimize the spread of contamination. A 40-in. centrifuge is located on each of the operating decks. After the building was deactivated, the E cell centrifuge was removed from the operating deck and placed on the E cell floor. A temporary plank and plywood deck has been built over E cell, 5 ft above the second-floor level.

Cell C differs from the other cells both in structure and arrangement. Approximately half of the cell consists of a pit whose floor is 19 ft below the first-floor level. Vessels in the deep cell include two 4.5-ft-diameter by 7-ft-tall tanks and one 9-ft-diameter by 9-ft-high tank. A 5.5-ft by 11-ft-high pipe tunnel extends 34 ft from the deep cell beneath the first-floor offices to a pipe encasement from 221-B. The piping in this tunnel and the encasement were used for transferring solutions between 221-B and 224-B Buildings. A single, 9-ft-diameter by 9-ft-high tank is on the first-floor level of C cell.

In addition to the access from the A, B, D, and E operating decks, each cell (A through F) has a ground-level exterior door. Sheet metal covers with neoprene gaskets and caulking have been placed over these doors to minimize air infiltration. Additionally, a 12-ft-wide by 21-ft-high equipment access door is located in the top portion of the outside wall of E cell.

A manually operated, 8-ton bridge crane is installed over the cells. The rails run the length of cells A through E, allowing access to each of the cells. The internal rails of the bridge crane are aligned with external rails that pass through the equipment access door, allowing the crane to move equipment into and out of the building. The crane was operated from a walkway that extends around the outsides of the cells at the second-floor level. The crane is without power and is now deactivated. A 6-ft-high wall shields the walkway from the cells, and access doors to the walkway are located at both ends of the A through E pipe gallery.

The 50.5-ft by 25-ft by 24-ft-high F cell is separated from the outer cells by a concrete wall; only process and waste piping interconnect F cell with the other cells. One-quarter of F cell is a 12.67-ft by 25-ft centrifuge deck that is elevated 7 ft above the remainder of the cell floor. Doors enter F cell from the loadout area, the outside, and from the second-floor operating gallery.

Two 26-in. centrifuges are located on the elevated operating deck of F cell. The first-floor level contains four vessels with dimensions of 4-ft diameter by 5-ft tall. Additional equipment includes a small centrifuge that is 12 in. in diameter and two small vessels 1.5-ft diameter by 2-ft tall. A scale and agitator motor from elsewhere in the facility are being stored in F cell.

Feed and Waste Lines

Feed lines from 221-B cells 17 and 19 run through an underground encasement into the C Cell pit to tank C-4.

A process waste line exits C Cell from tank C-8 to the 241-B-361 settling tank. This line has been isolated and blanked outside of C-Cell. Two chemical sewer lines were also provided for 224-B operations. A chemical sewer for higher activity waste led to the 221-B chemical sewer, and a low risk cooling water waste line connected to the 221-B cooling water discharge. A schematic of these waste lines is shown in Figure 1-5.

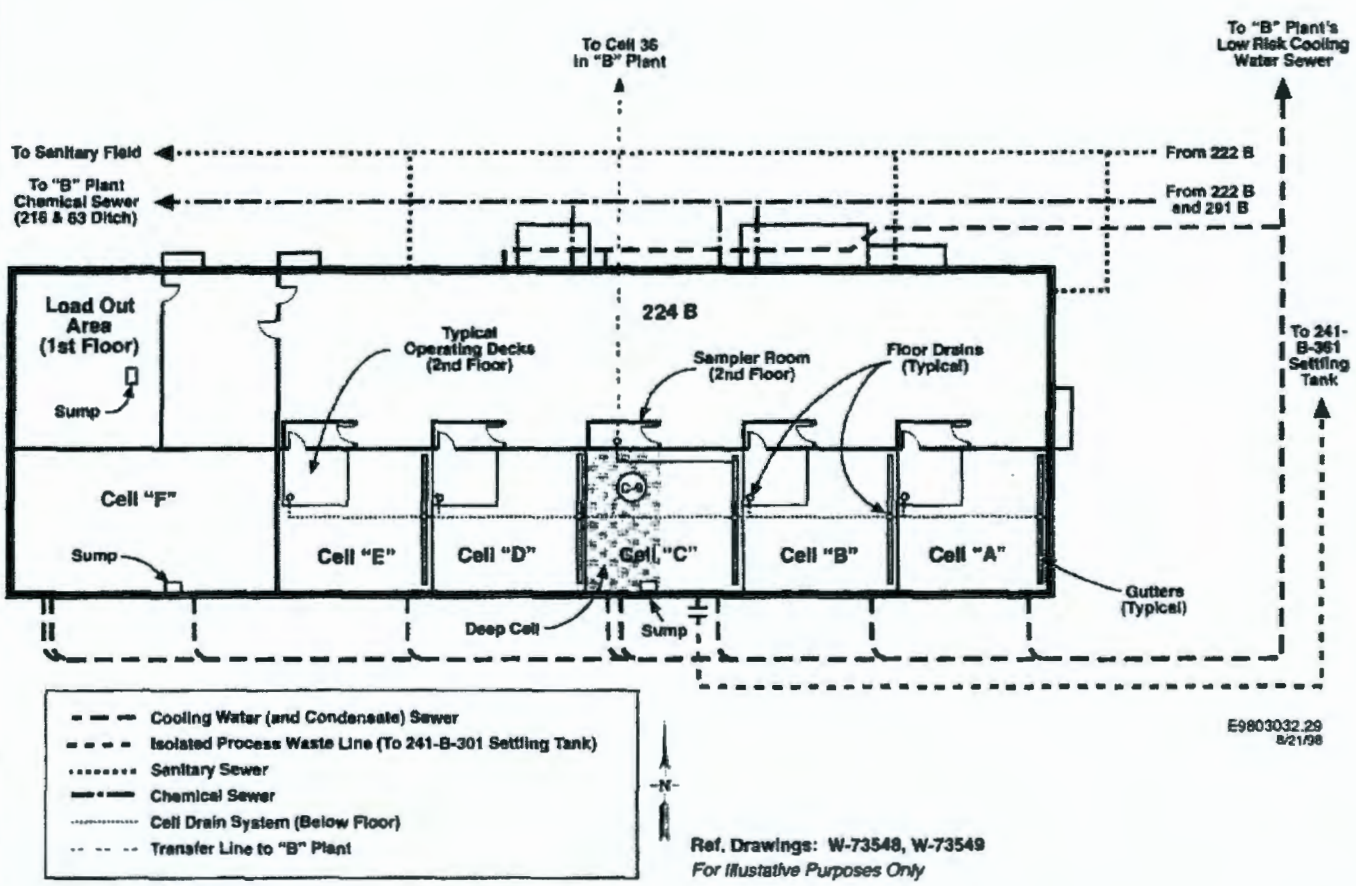

Figure 1-5. 224-B facility waste lines.

Ventilation

The main building ventilation system is currently inactive. The tanks in the process cells are connected to vessel ventilation headers that tie into a 24" ventilation line leading into the 221-B ventilation tunnel. This provides a small differential pressure on the tanks but has minimal effect on the overall process cells ventilation flow.

Utilities

The fire system has been inactivated and isolated.

The raw water and sanitary water supply to the facility has been isolated and capped off outside the east end of the building.

Electrical power distribution to the facility has been modified to provide power only to the lighting, receptacles and formerly to the fire protection system.

Process Knowledge

The purpose of the 224-B Concentration Facility was to receive product plutonium solution from the 221-B Separations Facility and further purify and concentrate this solution. The goal was to produce a concentrated plutonium nitrate solution that could be transferred to the 231-Z Isolation Facility for final concentration to a product that could be shipped offsite.

Feed was received from cell 14 of the 221-B facility in approximately 330 gallon batches to tank C-4 in 224-B. The chemical processing in the 224-B facility consisted of an oxidation step, bismuth phosphate precipitation of impurities, a lanthanum fluoride crossover step, and two more lanthanum fluoride precipitations, followed by a final metathesis from a fluoride to hydroxide carrier so that the plutonium could be dissolved in nitric acid.

The overall process is illustrated in Figure 1-6, with an indication of the cells and equipment where the steps were carried out in Figures 1-7 through 1-10

Figure 1-6. 224-B Process Flowsheet Block Diagram.

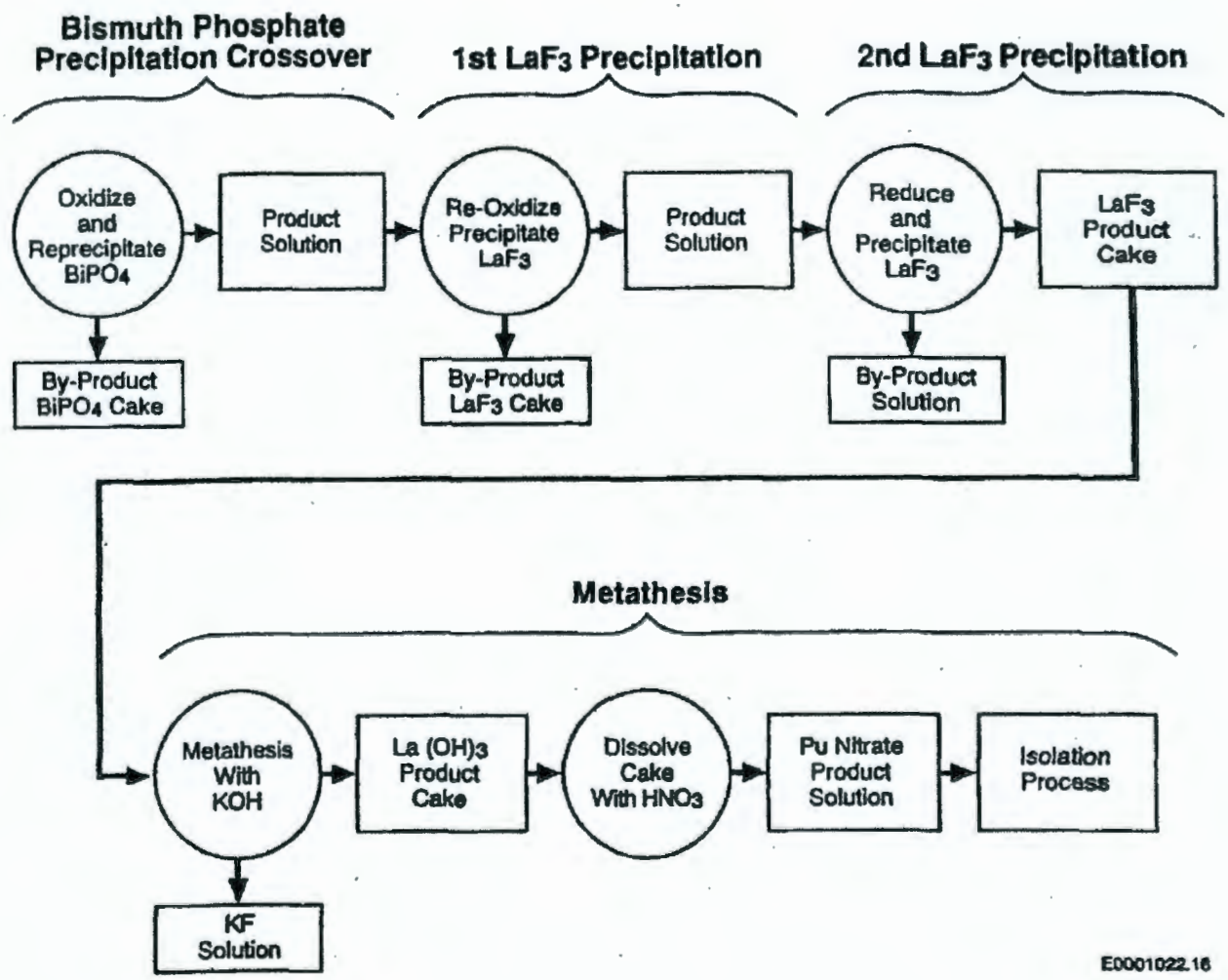

Figure 1-7. 224-B Bismuth Phosphate Precipitation and Crossover Steps Block Diagram.

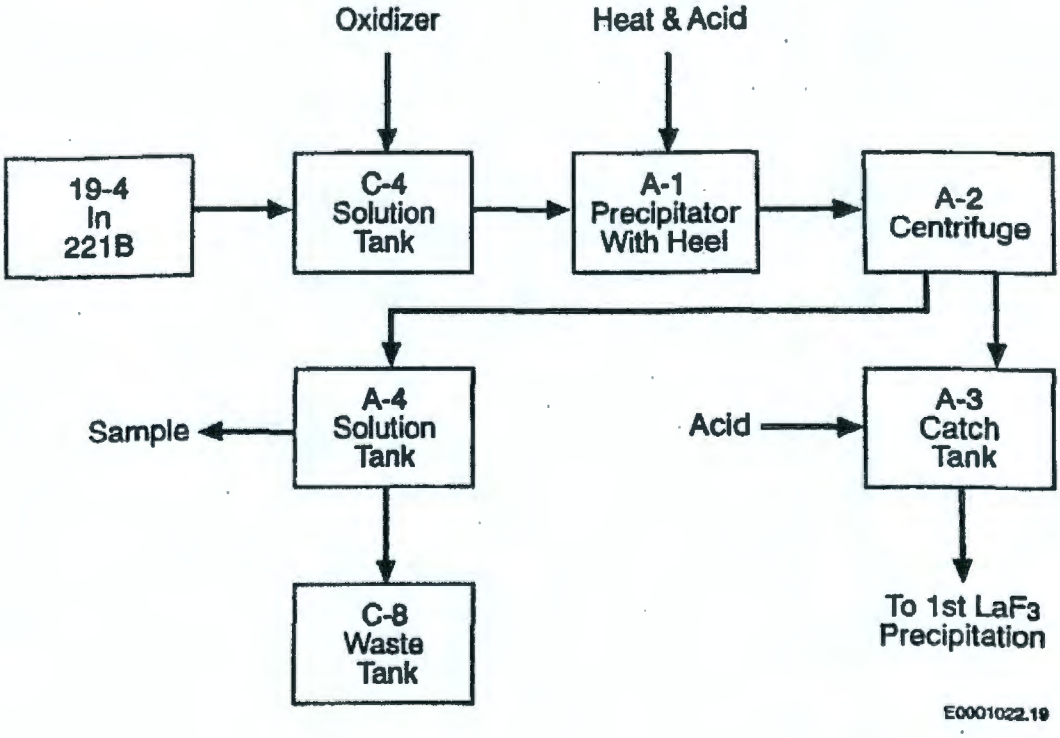

Figure 1-8. 224-B First Lanthanum Fluoride Precipitation Step Block Diagram.

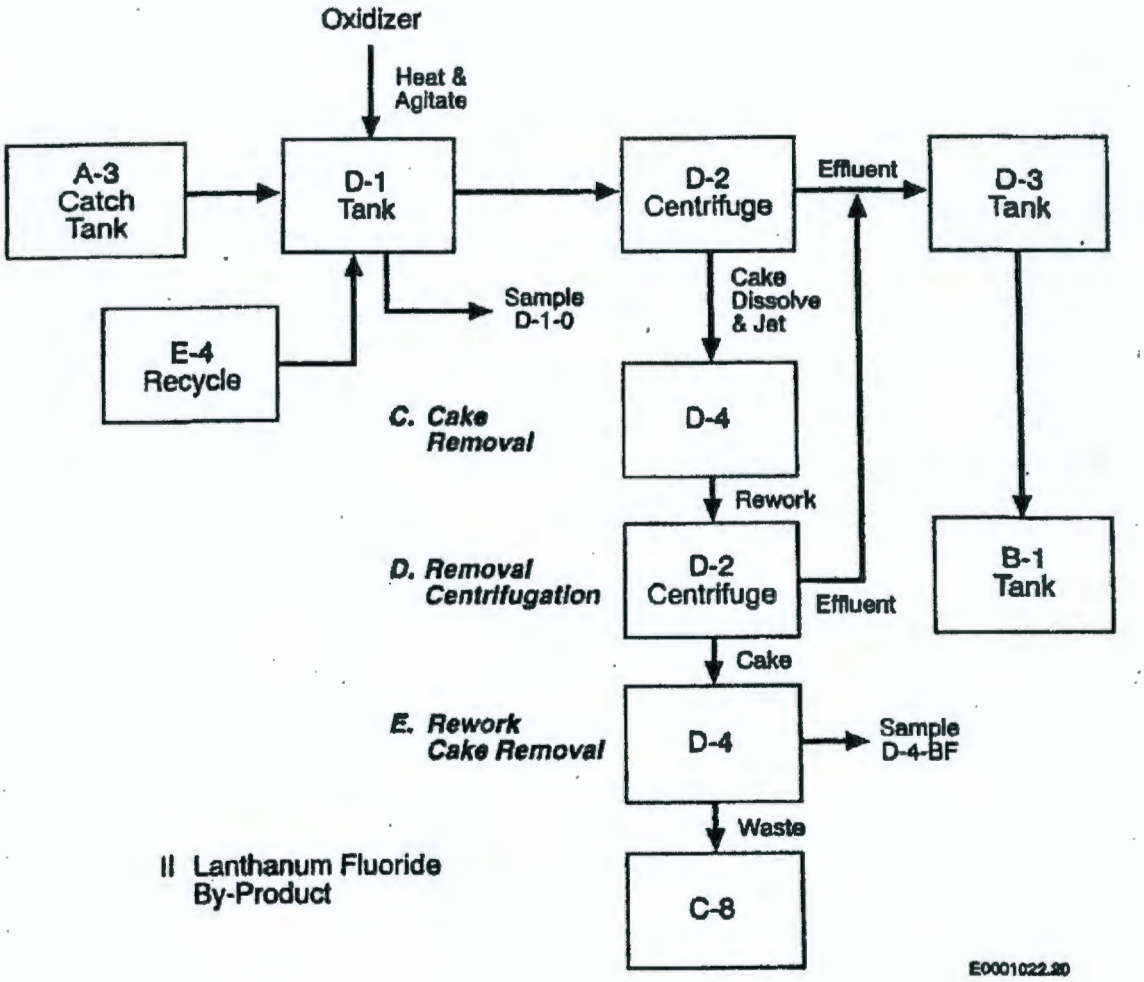

Figure 1-9. 224-B Second and Third Lanthanum Fluoride Precipitation Step Block Diagram.

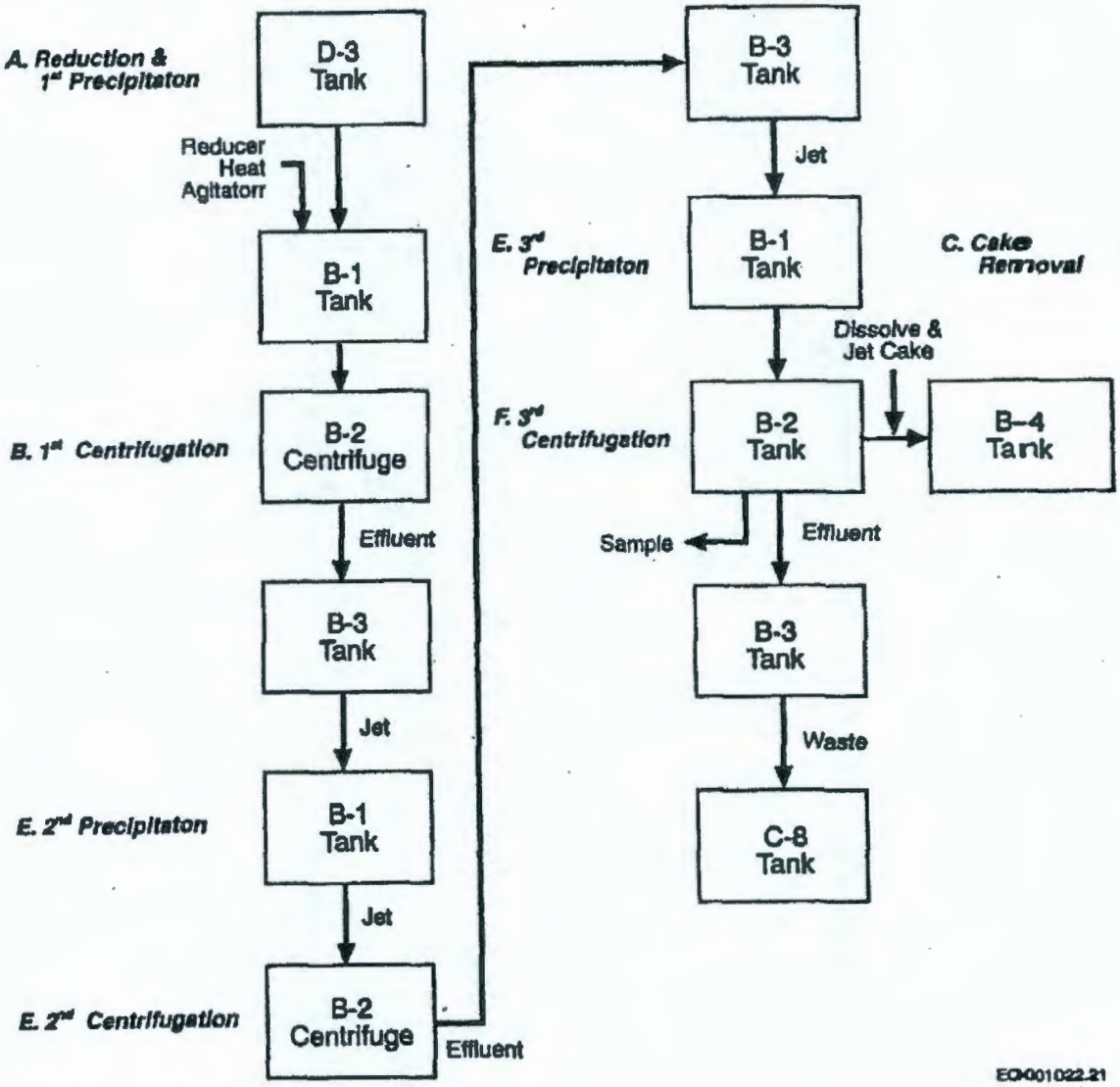

Figure 1-10. 224-B Metathesis and Product Loadout Step Block Diagram.

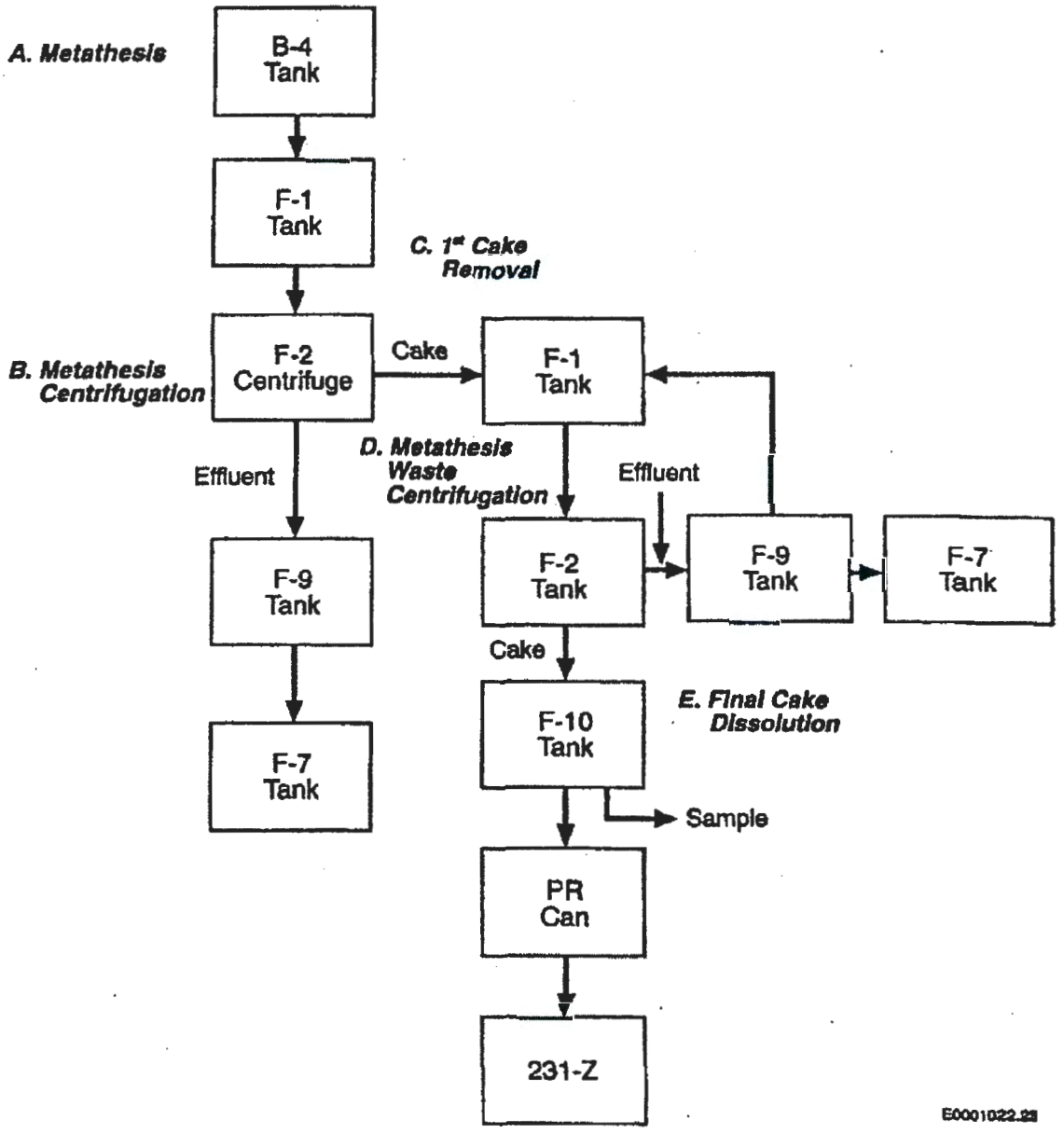

Feed Material

Product solution from the 221-B Separations Facility process was provided via underground lines to the C-4 tank in 224-B as the feed material for the concentration process. Table 1-4 shows the composition of this material.

Table 1-4. Feed from 221-U.

Bismuth Phosphate	$BiPO_4$
Nitric Acid	HNO_3
Sodium Bismuthate	$NaBiO_3$
Sodium Dichromate	$Na_2Cr_2O_7$
Plutonium	n/a
Trace Americium	n/a
Trace Activation and Fission Products	n/a

During the early process development of the entire cycle through the separations, concentration and isolation facility, it was found that plutonium losses could be further minimized by bring a recycle solution stream back from the 231-Z Isolation Facility to the 244-B Concentration Facility and combining it with the feed from the 221-B Separations Facility. The chemical constituents of the recycle stream from 231-Z are given in table 1-5.

Table 1-5. Recycle Solutions from 231-Z.

Sulfuric Acid	H_2SO_4
Ammonium Sulfate	$(NH_4)_2SO_4$
Plutonium	n/a

Process Chemicals

The chemicals used for process additions in the 224-B Concentration Facility Process are given in Table 1-6, as well as those used in the final cleanout flushing activities.

Table 1-6. Chemicals Used In 224-B Concentration Process and Flushes.

Sodium Bismuthate	$NaBiO_3$
Phosphoric Acid	H_3PO_4
Nitric Acid	HNO_3
Potassium Permanganate	$KMnO_4$
Hydrofluoric Acid	HF
Lanthanum Salts	$La(NO_3)_3$-$2NH_4NO_3$-$4H_2O$
Sodium Hydroxide	NaOH
Oxalic Acid	$H_2C_2O_4$
Potassium Hydroxide	KOH
Sodium Dichromate	$Na_2Cr_2O_7$
Sodium Tartrate	$Na_2C_4H_4O_6$-$2H_2O$
Sodium Citrate	$Na_2C_6H_5O_7$-$2H_2O$
Hydrogen Peroxide	H_2O_2

Waste solutions from the process steps were routed to tank C-8 and the combined solution disposed to the 241-B-361 settling tank after neutralization with sodium hydroxide. Chemical species of the combined waste streams are shown in Table 1-7.

Table 1-7. Waste Solutions from 224-B Processing.

Ion	Weight Percent
Bi^{+3}	0.11
PO_4^{-3}	0.28
NO_3^-	3.91
La^{+3}	0.05
F^-	0.52
Na^+	3.39
K^+	0.79
Cr^{+3}	0.02
Mn^{+2}	0.03
$C_2O_4^{-2}$	0.12
NH_4^{+2}	0.01
SO_4^{-2}	0.03
H_2O	90.75

The routing of these process solutions through the tanks and equipment is described in detail in the early process flowsheets (GE 1951). A description of the tanks and the process chemistry applicable to each is given in Table 1-8, along with the functional steps performed in the process.

Table 1-8. Process Chemicals In Tanks and Equipment

Vessel Identifier	Design Capacity (gal)	Process Chemicals	Comments
A-1	4280	HNO_3, H_3PO_4, $BiPO_4$, Na_2CrO_7, $Na_2C_4H_4O_6$-$2H_2O$, $Na_2C_6H_5O_7$-$2H_2O$, H_2O_2	Initial bismuth phosphate precipitation.
A-2	N/A	Same as 'A-1'	Centrifuge used to separate liquid from solids from initial bismuth phosphate precipitation.
A-3	4280	HNO_3, H_3PO_4, Na_2CrO_7, $Na_2C_4H_4O_6$-$2H_2O$, $Na_2C_6H_5O_7$-$2H_2O$, H_2O_2	Received product solution from centrifuge A-2.
A-4	833	$BiPO_4$, HNO_3, $Na_2C_4H_4O_6$-$2H_2O$, $Na_2C_6H_5O_7$-$2H_2O$, H_2O_2	Received effluent solution from centrifuge A-2.
B-1	4280	HNO_3, H_3PO_4, $NaNO_3$, KNO_3, $Cr(NO_3)_3$, HF, LaF_3, $H_2C_2O_4$, $Mn(NO_3)_2$, NH_4-NO_3, H_2SO_4, $(NH_4)_2SO_4$, $Na_2C_4H_4O_6$-$2H_2O$, $Na_2C_6H_5O_7$-$2H_2O$, H_2O_2	Second and third lanthanum precipitation steps.

Table 1-8. Process Chemicals In Tanks and Equipment

Vessel Identifier	Design Capacity (gal)	Process Chemicals	Comments
B-2	N/A	Same as 'B-1'	Centrifuge used to separate liquid from solids for second and third lanthanum precipitation steps
B-3	4280	HNO_3, H_3PO_4, $NaNO_3$, KNO_3, $Cr(NO_3)_3$, HF, $H_2C_2O_4$, $Mn(NO_3)_2$, NH_4NO_3, H_2SO_4, $(NH_4)_2SO_4$, $Na_2C_4H_4O_6$-$2H_2O$, $Na_2C_6H_5O_7$-$2H_2O$, H_2O_2	Received effluent solution from centrifuge B-2.
B-4	833	$La(OH)_3$, KOH, KF, $Na_2C_4H_4O_6$-$2H_2O$, $Na_2C_6H_5O_7$-$2H_2O$, H_2O_2	Received product solution from centrifuge B-2.
B-6	833	Same as 'B-4'	Received product solution from centrifuge B-2.
C-4	833	$BiPO_4$, HNO_3, $NaBiO_3$, Na_2CrO_7, $Na_2C_4H_4O_6$-$2H_2O$, $Na_2C_6H_5O_7$-$2H_2O$, H_2O_2	Received feed from 221-B and performed oxidation step.
C-7	4280	All chemicals listed for other vessels.	Overflow tank for C-8
C-8	4280	All chemicals listed for other vessels.	Tank that received waste from other cells, neutralized and shipped waste to disposal.
D-1	4280	HNO_3, H_3PO_4, Na_2CrO_7, $KMnO_4$, HF, LaF_3, NH_4NO_3, KNO_3, H_2SO_4, $(NH_4)_2SO_4$, $Na_2C_4H_4O_6$-$2H_2O$, $Na_2C_6H_5O_7$-$2H_2O$, H_2O_2	First lanthanum precipition and crossover step. Recycle from E-4 added here.
D-2	N/A	Same as 'D-1'	Centrifuge used to separate liquid from solids from first lanthanum precipitation step.
D-3	4280	HNO_3, H_3PO_4, Na_2CrO_7, $KMnO_4$, HF, NH_4NO_3, KNO_3, H_2SO_4, $(NH_4)_2SO_4$, $Na_2C_4H_4O_6$-$2H_2O$, $Na_2C_6H_5O_7$-$2H_2O$, H_2O_2	Received product solution from centrifuge D-2.
D-4	833	LaF_3, HNO_3, HF, MnO_2, $Na_2C_4H_4O_6$-$2H_2O$, $Na_2C_6H_5O_7$-$2H_2O$, H_2O_2	Received effluent solution from centrifuge D-2.
E-1	4280	HNO_3, H_3PO_4, $NaNO_3$, KNO_3, $Cr(NO_3)_3$, HF, LaF_3, $H_2C_2O_4$, $Mn(NO_3)_2$, NH_4NO_3, H_2SO_4, $(NH_4)_2SO_4$, $Na_2C_4H_4O_6$-$2H_2O$, $Na_2C_6H_5O_7$-$2H_2O$, H_2O_2	Second and third lanthanum precipitation steps.
E-2	N/A	Same as 'E-1'	Centrifuge used to separate liquid from solids for second and third lanthanum precipitation steps

Table 1-8. Process Chemicals In Tanks and Equipment

Vessel Identifier	Design Capacity (gal)	Process Chemicals	Comments
E-3	4280	HNO_3, H_3PO_4, $NaNO_3$, KNO_3, $Cr(NO_3)_3$, HF, $H_2C_2O_4$, $Mn(NO_3)_2$, NH_4NO_3, H_2SO_4, $(NH_4)_2SO_4$, $Na_2C_4H_4O_6$-$2H_2O$, $Na_2C_6H_5O_7$-$2H_2O$, H_2O_2	Received effluent solution from centrifuge E-2.
E-4	833	KNO_3, H_2SO_4, $(NH_4)_2SO_4$, $Na_2C_4H_4O_6$-$2H_2O$, $Na_2C_6H_5O_7$-$2H_2O$, H_2O_2	Received recycle solution from 231-Z
F-1	470	$La(OH)_3$, KOH, KF, $Na_2C_4H_4O_6$-$2H_2O$, $Na_2C_6H_5O_7$-$2H_2O$, H_2O_2	Metathesis step to concentrate product.
F-2	N/A	Same as contents of 'F-1'	Centrifuge used to separate liquid from solids for Metathesis step.
F-22	N/A	Same as contents of 'F-1'	Centrifuge used to separate liquid from solids for Metathesis step.
F-7	470	$La(OH)_3$, KOH, KF, NH_4NO_3, $Na_2C_4H_4O_6$-$2H_2O$, $Na_2C_6H_5O_7$-$2H_2O$, H_2O_2	Received effluent from metathesis step, also used for rework solutions.
F-8	470	KOH, KF, NH_4NO_3, $Na_2C_4H_4O_6$-$2H_2O$, $Na_2C_6H_5O_7$-$2H_2O$, H_2O_2	Received effluent from metathesis step
F-9	470	KOH, KF, NH_4NO_3, $Na_2C_4H_4O_6$-$2H_2O$, $Na_2C_6H_5O_7$-$2H_2O$, H_2O_2	Received effluent from metathesis step.
F-10	20	$La(NO_3)_3$, HNO_3, KNO_3, $Pu(NO_3)_4$, $Na_2C_4H_4O_6$-$2H_2O$, $Na_2C_6H_5O_7$-$2H_2O$, H_2O_2	Received product from metathesis step. Load-out tank for final product concentrated Pu solution.

Shutdown

As production rates were increased at Redox and T-Plant, the operation of the B Plant complex became unnecessary in 1952. The 224-B facility ceased its concentration process mission in August 1952.

At that time, a decontamination program was started with a goal to recover residual plutonium remaining in the process vessels of B Plant and the 224-B facility. The tanks in the 224-B facility were flushed using several effective cleaning agents during these shutdown activities (Raile, 1953). This reference documents that a strong nitric acid flush was run through all the vessels in 224-B, followed by a series of other flushes to maximize the removal of product residues from the tanks. The chemicals used are listed in Table 1.6. Operational monthly reports also indicate that the 221-B facility was placed into a lay away status with steam and water lines disconnected, as well as chemical and process lines drained, flushed and blanked.

As part of preparation for D&D planned in the mid and late 1980's, an assessment of the status of the tanks and lines in the facility was performed (Speer, 1988). The assessment concluded that although documentation of tank and line draining and flushing did not exist, personnel accounts stated that these activities took place, and all external observations indicated that there were no liquids present in the equipment.

Inactive Facility Surveillance and Maintenance

Since the facility was shutdown in 1952, there have been no process operations. A few pieces of equipment, mostly on the gallery side, have been removed. Most of the chemical make-up tanks are no longer in the facility.

Subsequent to the deactivation of the 224-B facility in 1952, occupancy of the building included plant support and plant forces personnel, pipe fabrication activities, and decommissioning staff. The staff preparing to start decommissioning in the mid to late 1980s was the building's last occupants. These personnel moved out in mid-1993 following the deferment of the decommissioning project.

Plan for Project Action

An EE/CA (DOE, 2003) is in progress that proposes the demolition of the facility to slab on grade. An Action Memorandum approving this removal action is expected in early 2004.

Existing Sources of Data

The EE/CA contains general background information on the facility and alternatives evaluated for remediation. References cited in that document are a general starting point for information to support the DQO. A significant effort to identify radionuclide distributions in the process cells was made in 1985 (Gould, 1985). Both Non Destructive Assay (NDA) of equipment and surveys of contamination and direct readings on surfaces and equipment were completed. The NDA results have been used in safety analysis documents, and the contamination levels provide an extensive survey of the facility radiological condition. Since the process cell side of the facility is in an inactive configuration with little ventilation or other motive forces that could transport the contaminants, this distribution is unlikely to have changed significantly.

The general dose levels of penetrating radiation in the facility are minimal, and the radiological hazard to workers is associated with airborne and surface contamination, as well as potential for exposure when performing D&D on equipment containing residual radionuclide inventory.

The inventory of transuranic radionuclides determined in (Gould, 1985) is shown in tables 1-9 and 1-10 below which present summary information regarding the amount of radionuclides associated with each cell and tank or centrifuge. The data indicate that most of the inventory of transuranics can be found in equipment where primary processing activities were conducted and some residual holdup could be expected.

Table 1-9. Transuranic Inventory In 224-B Cells (grams).

	Total Plutonium	^{241}Am
Cell A	6.3E+00	1.7E-02
Cell B	9.4E+00	2.6E-02
Cell C	2.2E+01	5.9E-02
Cell D	3.8E+02	1.0E+00
Cell E	7.2E+00	2.0E-02
Cell F	1.4E+02	3.8E-01
Total	5.6E+02	1.5E+00

Table 1-10. Inventory in 224-B Cells Tanks and Centrifuges (grams).

		Total Pu	^{238}Pu	^{239}Pu	^{240}Pu	^{241}Pu	^{242}Pu	^{241}Am
Cell A	A-1	3.2E-01	5.0E-05	3.0E-01	2.0E-02	2.2E-04	9.7E-05	8.7E-04
	A-3	3.2E-01	5.0E-05	3.0E-01	2.0E-02	2.2E-04	9.7E-05	8.7E-04
	A-4	1.1E-01	1.7E-05	1.0E-01	6.6E-03	7.5E-05	3.2E-05	2.9E-04
	Centrifuge	3.6E+00	5.6E-04	3.4E+00	2.2E-01	2.5E-03	1.1E-03	9.9E-03
Cell B	B-1	1.3E+00	2.0E-04	1.2E+00	7.9E-02	9.0E-04	3.9E-04	3.5E-03
	B-3	1.3E+00	2.0E-04	1.2E+00	7.9E-02	9.0E-04	3.9E-04	3.5E-03
	B-4	6.4E-01	1.0E-04	6.0E-01	3.9E-02	4.5E-04	1.9E-04	1.7E-03
	B-6	6.4E-01	1.0E-04	6.0E-01	3.9E-02	4.5E-04	1.9E-04	1.7E-03
	Centrifuge	3.6E+00	5.6E-04	3.4E+00	2.2E-01	2.5E-03	1.1E-03	9.9E-03
Cell C	C-4	3.1E+00	4.8E-04	2.9E+00	1.9E-01	2.2E-03	9.4E-04	8.5E-03
	C-7	4.1E+00	6.3E-04	3.8E+00	2.5E-01	2.8E-03	1.2E-03	1.1E-02
	C-8	8.9E+00	1.4E-03	8.3E+00	5.4E-01	6.2E-03	2.7E-03	2.4E-02
	C-9	3.1E+01	4.8E-03	2.9E+01	1.9E+00	2.2E-02	9.4E-03	8.5E-02
Cell D	D-1	3.0E+00	4.6E-04	2.8E+00	1.8E-01	2.1E-03	9.0E-04	8.2E-03
	D-3	3.7E+02	5.7E-02	3.5E+02	2.3E+01	2.6E-01	1.1E-01	1.0E+00
	D-4	1.1E+00	1.7E-04	1.0E+00	6.6E-02	7.5E-04	3.2E-04	2.9E-03
	Centrifuge	3.6E+00	5.6E-04	3.4E+00	2.2E-01	2.5E-03	1.1E-03	9.9E-03
Cell E	E-1	1.1E-01	1.7E-05	1.0E-01	6.6E-03	7.5E-05	3.2E-05	2.9E-04
	E-3	1.1E-01	1.7E-05	1.0E-01	6.6E-03	7.5E-05	3.2E-05	2.9E-04
	E-4	1.5E+00	2.3E-04	1.4E+00	9.2E-02	1.0E-03	4.5E-04	4.1E-03
	Centrifuge	3.6E+00	5.6E-04	3.4E+00	2.2E-01	2.5E-03	1.1E-03	9.9E-03
Cell F	F-1	6.5E+00	1.0E-03	6.1E+00	4.0E-01	4.6E-03	2.0E-03	1.8E-02
	F-7	6.5E+00	1.0E-03	6.1E+00	4.0E-01	4.6E-03	2.0E-03	1.8E-02
	F-8	6.5E+01	1.0E-02	6.1E+01	4.0E+00	4.5E-02	2.0E-02	1.8E-01
	F-9	5.0E+01	7.8E-03	4.7E+01	3.1E+00	3.5E-02	1.5E-02	1.4E-01
	F-2 Centrifuge	3.6E+00	5.6E-04	3.4E+00	2.2E-01	2.5E-03	1.1E-03	9.9E-03
	F-22 Centrifuge	3.6E+00	5.6E-04	3.4E+00	2.2E-01	2.5E-03	1.1E-03	9.9E-03

Table 1-10. Inventory in 224-B Cells Tanks and Centrifuges (grams).

		Total Pu	^{238}Pu	^{239}Pu	^{240}Pu	^{241}Pu	^{242}Pu	^{241}Am
	G-1 & G-2 Centrifuges	3.2E+00	5.0E-04	3.0E+00	2.0E-01	2.2E-03	9.7E-04	8.7E-03

Non-transuranic radionuclide and ^{241}Am contamination levels from (RHO, 1985b) are summarized in table 1-11. The summary table is based on extensive survey data that is tabulated in the appendices of the reference. Additional data from surveys performed in 1993 and 1994 was located during the search for historical records and compared to the 1985 data. Comparable levels of contamination were identified, indicating that no appreciable movement of radionuclides was occurring, as would be expected in an inactive facility with very little ventilation flow.

Contamination levels are very low in the galleries of 224-B, based on the results of routine surveillances over many years. There are some areas of contamination in the vestibules leading to the sample stations and centrifuge platforms.

Table 1-11. Summary Average Radionuclide Contamination Levels In 224-B Cells.

	^{241}Am	^{137}Cs
Cell A		
Dust solids	741 pCi/g	215 pCi/g
Pipe scrapings	42,400 pCi/g	577 pCi/g
Inside pipe/tank smears	34,400 pCi	129 pCi
Flanges	2,267 pCi	56 pCi
Cell B		
Dust solids	505 pCi/g	284 pCi/g
Smears on walls, floors	9,000 pCi/g	Not available
Cell C		
Dust solids	472 pCi/g	394 pCi/g
Scrapings off pit wall	60 pCi/g	12 pCi/g
Flanges	8,890 pCi	90 pCi
Cell D		
Dust solids	171 pCi/g	143 pCi/g
Inside pipe/tank smears	30,352 pCi	198 pCi
Flanges	1940 pCi	627 pCi
Cell E		
Dust solids	89 pCi/g	75 pCi/g
Inside pipe/tank smears	34,820 pCi	14,100 pCi
Samplers	2,177 pCi	Not detectable
Flanges	2,018 pCi	Not available
Cell F		
Dust solids	2,326 pCi/g	1,098 pCi/g
Flanges	9,232 pCi	839 pCi
Loadout Hood	680 nCi	18.5 nCi

Note: The values above are given in activity for the entire smear sample unless noted as pCi/g.

1.7 CONTAMINANTS OF POTENTIAL CONCERN

Table 1-12 below identifies the waste streams that will be encountered during the D&D activities within the scope of this DQO. The process waste streams are selected to group tanks and equipment that

performed unit operations on specific solutions. Table 1-13 and 1-14 summarize the radiological and chemical COPCs described in the various waste streams. These COPCs are based on process knowledge, historical analytical data, and current DQO team agreement.

Table 1-12. Waste Streams and Contaminants of Potential Concern.

WS #	Waste Stream	Known or Suspected Source of Contamination	COPCs
1	Process vessels, equipment and piping in Cells A-F	Radiological contamination from process solutions and wastes.	Transuranics, fission and activation products (see Table 1-13).
		Potential chemical contamination from process chemicals, residues from waste effluents, recycle, and flushing activities, and from structural corrosion of processing equipment.	Tin, aluminum, iron, carbon, nickel, chromium, molybdenum, niobium, bismuth phosphate, nitric acid, lanthanum fluoride, potassium hydroxide, phosphoric acid, sodium nitrate, potassium nitrate, chromium nitrate, hydrogen fluoride, oxalic acid, manganese nitrate, ammonium nitrate, potassium fluoride, sodium tartrate, sodium citrate and hydrogen peroxide.
2	Miscellaneous aqueous liquid residuals identified in system pumps, sumps, tanks, piping, drains, and processing equipment	Radiological contamination from the process solutions and sediments.	Transuranics, fission and activation products (see Table 1-13).
		Potential chemical contamination from structural corrosion of processing equipment and residues from process and decontamination chemicals that may have contaminated the liquid effluent and sediments.	Tin, aluminum, iron, carbon, nickel, chromium, molybdenum, niobium, bismuth phosphate, nitric acid, lanthanum fluoride, potassium hydroxide, phosphoric acid, sodium nitrate, potassium nitrate, chromium nitrate, hydrogen fluoride, oxalic acid, manganese nitrate, ammonium nitrate, potassium fluoride, sodium tartrate, sodium citrate and hydrogen peroxide.
3	Miscellaneous solids, sediments and residuals identified in system pumps, sumps, tanks, piping, and processing equipment	Radiological contamination from the process solutions and sediments.	Transuranics, fission and activation products (see Table 1-13).
		Potential chemical contamination from structural corrosion of processing equipment and residues from process and decontamination chemicals.	Tin, aluminum, iron, carbon, nickel, chromium, molybdenum, niobium, bismuth phosphate, nitric acid, lanthanum fluoride, potassium hydroxide, phosphoric acid, sodium nitrate, potassium nitrate, chromium nitrate, hydrogen fluoride, oxalic acid, manganese nitrate, ammonium nitrate, potassium fluoride, sodium tartrate, sodium citrate and hydrogen peroxide.
4	Bulk demolition debris includes but is not limited to: • poured concrete • concrete block • sheetrock	Potential radiological contamination from airborne and/or waterborne contamination.	Transuranics, fission and activation products (see Table 1-13).
		Potential chemicals from waterborne contamination.	Tin, aluminum, iron, carbon, nickel, chromium, molybdenum, niobium, bismuth phosphate, nitric acid, lanthanum fluoride, potassium hydroxide, phosphoric acid, sodium nitrate, potassium nitrate, chromium nitrate, hydrogen fluoride, oxalic acid, manganese nitrate, ammonium nitrate, potassium fluoride, sodium tartrate, sodium citrate and hydrogen peroxide.

Table 1-12. Waste Streams and Contaminants of Potential Concern.

WS #	Waste Stream	Known or Suspected Source of Contamination	COPCs
	• wooden doors • non-asbestos containing roofing materials • pumps & miscellaneous equipment • steel siding • ventilation system	Paint/coatings.	Cadmium, lead, chromium, mercury, barium, and PCBs.
5	Asbestos-containing material	Potential radiological contamination from airborne contamination, or cross contamination with process solutions or equipment.	Transuranics, fission and activation products (see Table 1-13).
		Potential chemical contamination from cross contamination with process solutions or equipment.	Tin, aluminum, iron, carbon, nickel, chromium, molybdenum, niobium, bismuth phosphate, nitric acid, lanthanum fluoride, potassium hydroxide, phosphoric acid, sodium nitrate, potassium nitrate, chromium nitrate, hydrogen fluoride, oxalic acid, manganese nitrate, ammonium nitrate, potassium fluoride, sodium tartrate, sodium citrate and hydrogen peroxide.
		Asbestos in pipe insulation, cement wall board, floor tiles, valve gaskets, and roofing material.	Asbestos fibers.
6	Incandescent light fixtures	Potential radiological contamination from airborne contamination.	Transuranics, fission and activation products (see Table 1-13).
		Light bulbs (lead-base).	Lead.
7	Florescent light fixtures	Potential radiological contamination from airborne contamination.	Transuranics, fission and activation products (see Table 1-13).
		Internals of light ballasts.	PCBs.
		Internals of light bulbs.	Mercury.
8	Lead packing in bell and spigot piping in galleries	Potential chemical contamination from structural corrosion of water system equipment.	Tin, aluminum, iron, carbon, nickel, chromium, molybdenum, iron.
		Packing in pipe base.	Lead.
9	Lead shielding	Potential radiological contaminants on exposed surfaces.	Transuranics, fission and activation products (see Table 1-13).
		Lead bricks and blankets used for shielding.	Lead
10	Mercury switches	Potential radiological contamination from airborne contamination.	Transuranics, fission and activation products (see Table 1-13).
		Switchgear/instrumentation.	Mercury.

Table 1-12. Waste Streams and Contaminants of Potential Concern.

WS #	Waste Stream	Known or Suspected Source of Contamination	COPCs
11	Emergency light batteries	Potential radiological contamination from airborne contamination.	Transuranics, fission and activation products (see Table 1-13).
		Battery constituents.	Cadmium, nickel, lead, sulfides.
12	Exit signs and smoke detectors	Potential radiological contamination from airborne contamination.	Transuranics, fission and activation products (see Table 1-13).
		Internal radioactive sources.	Tritium and americium-241.
13	Lubrication grease, oil, hydraulic oils (includes door actuators and transformer oil)	Potential radiological contamination from past operations.	Transuranics, fission and activation products (see Table 1-13).
		Residue from metallic parts and chemicals used as additives.	PCBs, arsenic, barium, cadmium, chromium, lead, mercury, TOX.
14	HEPA Filters	Potential radiological contamination from past operations	Transuranics, fission and activation products (see Table 1-13).
15	Step Off Pad Soft Waste	Potential radiological contamination from handling process equipment and other facility components.	Transuranics, fission and activation products (see Table 1-13).
		Potential chemical contamination from handling process equipment and other facility components	Chemical constituents seen in process, see WS#1.
16	Subsurface soil below building slab and adjacent to building	Potential radiological contamination from process solution leaks or mishandling.	Transuranics, fission and activation products (see Table 1-13).
			Chemical constituents seen in process, see WS#1.

Table 1-13. Radiological Contaminants of Potential Concern.

Radiological COPCs				
Americium-241 Cesium-137 Cobalt-60	Europium-152 Europium-154 Europium-155 Neptunium-237	Plutonium-238 Plutonium-239/240 Plutonium-241 Plutonium-242	Rhodium-106 Ruthenium-106 Yttrium-90 Strontium-90	Technetium-99 Tritium Uranium-238

Table 1-14. Chemical Contaminants of Potential Concern.

Feed Solution	Process Chemicals	Flush Solutions	Miscellaneous
Bismuth phosphate	Ammonia sulfate	Hydrogen peroxide	Asbestos fibers
Nitric acid	Ammonium nitrate	Nitric acid	Arsenic
Sodium bismuthate	Chromium nitrate	Sodium citrate	Barium
Sodium dichromate	Hydrofluoric acid	Sodium tartrate	Cadmium
	Lanthanum salts	Sodium hydroxide	Lead
Recycle Solution	Lanthanum fluoride		Mercury
Sulfuric acid	Lanthanum hydroxide	Corrosion Products	PCBs
Ammonia sulfate	Magnesium oxide	Tin	Silver
	Magnesium nitrate	Aluminum	Sulfides
	Manganese nitrate	Iron	
	Nitric acid	Carbon	
	Oxalic acid	Nickel	
	Phosphoric acid	Chromium	
	Potassium fluoride	Molybdenum	
	Potassium hydroxide	*Niobium*	
	Potassium nitrate		
	Potassium permanganate		
	Sodium bismuthate		
	Sodium dichromate		
	Sodium hydroxide		
	Sodium nitrate		

1.8 COPC'S EXCLUSIONS AND CALCULATIONS

1.8.1 Contaminant of Potential Concern Exclusions

Table 1-15 presents a list of the COPCs to be excluded from the investigation. These exclusions are based on physical laws, process knowledge, existing analytical data, and/or other mitigating factors. Table 1-12 also provides rationale for the exclusion of the identified COPCs.

The COPCs identified in Table 1-15 are excluded from further consideration for this DQO summary report because they meet at least one of the following criteria for exclusion:

- Short-lived radionuclides with half-lives less than 2 years in accordance with ERDF waste acceptance criteria (BHI 2002)
- Chemicals that are not federally regulated (40 *Code of Federal Regulations* [CFR] 261, 40 CFR 268, or 40 CFR 761) or Washington State (WAC 173-303) constituent

Table 1-15. Contaminant of Potential Concern Exclusions.

COPC	Rationale for Exclusion
Radionuclides	
Rhodium-106	Less than 2-year half-life.
Ruthenium-106	Less than 2-year half-life.
Chemical COPCs	
Aluminum	Excluded as a solid material; not a Washington State toxic or persistent waste and not a UHC as defined in 40 CFR 268.2.
Chloride	Excluded as a solid material; not a Washington State toxic or persistent waste and not a UHC as defined in 40 CFR 268.2.
Iron	Excluded as a solid material; not a Washington State toxic or persistent waste and not a UHC as defined in 40 CFR 268.2.
Molybdenum	Excluded as a solid material; not a Washington State toxic or persistent waste and not a UHC as defined in 40 CFR 268.2.
Tin	Excluded as a solid material; not a Washington State toxic or persistent waste and not a UHC as defined in 40 CFR 268.2.

UHC = underlying hazardous constituent

1.8.2 Contaminants of Concern to be Determined by Calculation

Table 1-16 identifies the COCs that will not necessarily require laboratory analysis for quantification but can be estimated based on calculations from other COC concentrations by one of the following methods:

- The concentration of the progeny can be determined from the parent nuclide when in secular equilibrium with a parent nuclide (i.e., the progeny is decaying as fast as it is formed from the parent)
- Can be calculated using reactor physics principles/relationships from known concentrations of isotopes being analyzed during the characterization activities

- Can be calculated based on previous analysis of SD-DD-TRP-002, Radiological Characterization of the 224B Hot Cells, 1985 and verification NDA data associated with isotopic ratios determined from material samples or swipes.

Table 1-16. Contaminants of Concern to be Determined by Calculation.

COC	Rationale for Determination by Calculation
Plutonium isotopes	The concentration of plutonium isotopes can be calculated in some instances using NDA data for americium-241 or micro-R instrument readings, and isotopic ratios for associated plutonium based on smears/samples from material and equipment.
Americium-241	In some cases the concentration of americium-241 can be calculated from micro-R instrument readings correlated with previous representative NDA data and isotopic ratios from samples in the same area or waste stream.
Yttrium-90	Calculated based on secular equilibrium equations from strontium-90 results.

1.8.3 Final List of Contaminants of Concern

This section identifies the final list of COCs and the rationale of inclusion. Table 1-17 identifies COCs for which laboratory analysis may be conducted, as appropriate.

Table 1-17. Final Contaminant of Concern List.

Final COCs	Rationale for Inclusion
Radiological COCs	
Americium-241	Known product of reactor operations, identified in (RHO, 1985).
Cesium-137	Known fission product, identified in (RHO, 1985).
Cobalt-60	Known activation product, identified in (RHO, 1985).
Europium-152	Known fission product.
Europium-154	Known fission product.
Europium-155	Known fission product.
Neptunium-237	Known product of reactor operations, special production runs.
Plutonium-238	Known product of reactor operations, identified in (RHO, 1985).
Plutonium-239/240	Known product of reactor operations, identified in (RHO, 1985).
Plutonium-241	Known product of reactor operations.
Plutonium-242	Known product of reactor operations.
Strontium-90	Known fission product, identified in (RHO, 1985).
Technetium-99	Reactor fuel/target component.
Tritium	Known product of reactor operations.
Uranium-238	Reactor fuel component.
Yttrium-90	Daughter product of Sr-90 in secular equilibrium.
Chemical COCs	
Ammonium sulfate	No rationale for exclusion.
Ammonium nitrate	No rationale for exclusion.
Asbestos fibers	No rationale for exclusion.
Arsenic	No rationale for exclusion.
Asbestos fibers	No rationale for exclusion.
Ammonium sulfate	No rationale for exclusion.
Barium	No rationale for exclusion.

Table 1-17. Final Contaminant of Concern List.

Final COCs	Rationale for Inclusion
Bismuth phosphate	No rationale for exclusion.
Cadmium	No rationale for exclusion.
Carbon	No rationale for exclusion.
Chromium	No rationale for exclusion.
Chromium nitrate	No rationale for exclusion.
Hydrofluoric acid	No rationale for exclusion.
Hydrogen peroxide	No rationale for exclusion.
Lanthanum salts	No rationale for exclusion.
Lanthanum fluoride	No rationale for exclusion.
Lanthanum hydroxide	No rationale for exclusion.
Lead	No rationale for exclusion.
Magnesium oxide	No rationale for exclusion.
Magnesium nitrate	No rationale for exclusion.
Manganese nitrate	No rationale for exclusion.
Mercury	No rationale for exclusion.
Niobium	No rationale for exclusion.
Nitric acid	No rationale for exclusion.
Nickel	No rationale for exclusion.
Oxalic acid	No rationale for exclusion.
PCBs	No rationale for exclusion.
Phosphoric acid	No rationale for exclusion.
Potassium hydroxide	No rationale for exclusion.
Potassium fluoride	No rationale for exclusion.
Potassium nitrate	No rationale for exclusion.
Potassium permanganate	No rationale for exclusion.
Silver	No rationale for exclusion.
Sodium citrate	No rationale for exclusion.
Sodium dichromate	No rationale for exclusion.
Sodium hydroxide	No rationale for exclusion.
Sodium bismuthate	No rationale for exclusion.
Sodium nitrate	No rationale for exclusion.
Sodium tartrate	No rationale for exclusion.
Sulfuric acid	No rationale for exclusion.

1.8.4 Final Waste Stream and Contaminant of Concern List

Table 1-18 shows the waste streams and specific COCs identified for each waste stream in each facility.

Table 1-18. Final Waste Streams and Contaminants of Concern.

WS #	Waste Stream	Final COCs
1	Process vessels, equipment and piping in Cells A-F	See radiological COCs (Table 1-17).
		Carbon, nickel, chromium, niobium, bismuth phosphate, nitric acid, lanthanum fluoride, potassium hydroxide, phosphoric acid, sodium nitrate, potassium nitrate, chromium nitrate, hydrogen fluoride, oxalic acid, manganese nitrate, magnesium oxide, magnesium nitrate, potassium permanganate, ammonium sulfate, ammonium nitrate, potassium fluoride, sodium tartrate, sodium citrate and hydrogen peroxide.
2	Miscellaneous aqueous liquid residuals identified in system pumps, sumps, tanks, piping, drains, and processing equipment	See radiological COCs (Table 1-17).
		Carbon, nickel, chromium, niobium, bismuth phosphate, nitric acid, lanthanum fluoride, potassium hydroxide, phosphoric acid, sodium nitrate, potassium nitrate, chromium nitrate, hydrogen fluoride, oxalic acid, manganese nitrate, magnesium oxide, magnesium nitrate, potassium permanganate, ammonium sulfate, ammonium nitrate, potassium fluoride, sodium tartrate, sodium citrate and hydrogen peroxide.
3	Miscellaneous solids, sediments and residuals identified in system pumps, sumps, tanks, piping, and processing equipment	See radiological COCs (Table 1-17).
		Carbon, nickel, chromium, niobium, bismuth phosphate, nitric acid, lanthanum fluoride, potassium hydroxide, phosphoric acid, sodium nitrate, potassium nitrate, chromium nitrate, hydrogen fluoride, oxalic acid, manganese nitrate, magnesium oxide, magnesium nitrate, potassium permanganate, ammonium sulfate, ammonium nitrate, potassium fluoride, sodium tartrate, sodium citrate and hydrogen peroxide.
4	Bulk demolition debris includes but is not limited to: • poured concrete • concrete block • sheetrock • wooden doors • non-asbestos containing roofing materials • pumps & miscellaneous equipment • steel siding • ventilation system	See radiological COCs (Table 1-17).
		Carbon, nickel, chromium, niobium, bismuth phosphate, nitric acid, lanthanum fluoride, potassium hydroxide, phosphoric acid, sodium nitrate, potassium nitrate, chromium nitrate, hydrogen fluoride, oxalic acid, manganese nitrate, magnesium oxide, magnesium nitrate, potassium permanganate, ammonium sulfate, ammonium nitrate, potassium fluoride, sodium tartrate, sodium citrate and hydrogen peroxide.
		Cadmium, chromium, barium, lead, mercury, silver, and PCBs.
5	Asbestos-containing material	See radiological COCs (Table 1-17).
		Carbon, nickel, chromium, niobium, bismuth phosphate, nitric acid, lanthanum fluoride, potassium hydroxide, phosphoric acid, sodium nitrate, potassium nitrate, chromium nitrate, hydrogen fluoride, oxalic acid, manganese nitrate, ammonium nitrate, potassium fluoride, sodium tartrate, sodium citrate and hydrogen peroxide.
		Asbestos fibers.
6	Incandescent light fixtures	See radiological COCs (Table 1-17).
		Lead.
7	Florescent light fixtures	See radiological COCs (Table 1-17).
		PCBs.
		Mercury.
8	Lead packing in bell and spigot piping in galleries	See radiological COCs (Table 1-17).
		Nickel, chromium, lead, TOC, asbestos, hydrogen peroxide, sodium dichromate, and sodium hydroxide.
		Lead.
9	Lead shielding	See radiological COCs (Table 1-17).

Table 1-18. Final Waste Streams and Contaminants of Concern.		
WS #	Waste Stream	Final COCs
		Lead.
10	Mercury switches	See radiological COCs (Table 1-17).
		Mercury.
11	Emergency light batteries	See radiological COCs (Table 1-17).
		Cadmium, nickel, lead, mercury, and sulfuric acid.
12	Exit signs and smoke detectors	See radiological COCs (Table 1-17).
		Tritium and americium-241.
13	Lubrication grease, oil, hydraulic oils (includes door actuators and transformer oil)	See radiological COCs (Table 1-17).
		PCBs, arsenic, barium, cadmium, chromium, lead, mercury, TOX.
14	HEPA Filters	See radiological COCs (Table 1-17).
15	Step Off Pad Soft Waste	See radiological COCs (Table 1-17).
		Chemical constituents seen in process, see WS#1.
16	Subsurface soil below building slab and adjacent to building	See radiological COCs (Table 1-17). Chemical constituents seen in process, see WS #1.

1.8.5 Anomalous Waste Materials

This waste category includes any unplanned or unexpected material discovered during D&D operations that will require sampling and analysis to support disposition. The anomalous waste category is provided to allow field decision making based on "as-found" conditions discovered during demolition (described in further detail in Sections 3.0, and 7.0). Project Waste Specialists will support the final determination of the sample analyses that is required on a case-by-case basis, based on the appropriate acceptance criteria for treatment, storage or disposal.

1.8.6 Waste Disposition Options

The primary disposal option for the waste streams described in this DQO summary report is ERDF. The ERDF waste acceptance criteria addresses the radiological, chemical, and physical forms of waste. The ERDF cannot accept TRU waste or TRU-mixed waste. If TRU or TRU-mixed waste is encountered, storage is allowed at the CWC on a case-by-case basis and requires regulatory approval. TRU, TRU-mixed waste or radioactive mixed waste shipped to the CWC must meet the acceptance and packaging criteria outlined in HNF-EP-0063, *Hanford Site Solid Waste Acceptance Criteria* (FH 2002).

Liquid waste will either be sent to the ETF (with regulatory approval) or will be treated to meet the acceptance criteria of the receiving facility. Waste acceptance criteria for the ETF is established after submittal of waste stream characterization data.

The project will evaluate salvageable materials that may have the potential for reuse. At this time, the only items that will be considered for release for reuse will be those items that are not volumetrically contaminated (e.g., light fixtures and chairs). It is recognized that lubricants (i.e., grease and oils) have the potential for volumetric contamination; however, these items will be evaluated for recycling using established criteria.

2.0 STEP 2 – IDENTIFY THE DECISION

The purpose of DQO Step 2 is to define the principal study questions (PSQs) that need to be resolved to address the problem identified in DQO Step 1 and to define the alternative actions (AAs) that would result from the resolution of the PSQs. The PSQs and AAs are then combined into decision statements (DSs) that identify AAs that may be used.

2.1 PRINCIPAL STUDY QUESTIONS ALTERNATIVE ACTIONS AND DECISION STATEMENTS

Table 2-1 presents the task-specific PSQs, AAs, and resulting DSs. This table also provides a qualitative assessment of the severity of the consequences of taking an AA if it is incorrect. This assessment takes into consideration human health and the environment (i.e., flora/fauna) and political, economic, and legal ramifications. The severity of the consequences is expressed as low, moderate, or severe.

Table 2-1. Summary of DQO Step 2 Information.

PSQ-AA#	Alternative Action	Description of Consequences of Implementing the Wrong Alternative Action	Severity of Consequences (Low/Moderate / Severe)
PSQ #1 – Does the waste material exceed the radiological criteria for the disposal facility?			
1-1	The affected media exceeds the waste acceptance criteria for radionuclides.	Waste is improperly managed and disposed at an inappropriate facility.	Severe
1-2	The affected media does not exceed the waste acceptance criteria for radionuclides.	Additional project cost incurred as a result of using alternative disposal facilities.	Moderate
DS #1 – Determine if the radionuclides present in the waste material exceed the disposal facility's waste acceptance criteria.			
PSQ #2 – Do the chemical and/or physical properties of the waste material exceed the disposal facility's waste acceptance criteria limits?			
2-1	The chemical and/or physical properties of the waste material exceed the disposal facility's waste acceptance criteria limits.	Waste is managed as a nonhazardous waste and improperly disposed.	Severe
2-2	The chemical and/or physical properties do not exceed the disposal facility's waste acceptance criteria limits.	Waste is unnecessarily managed as a hazardous waste. Additional project cost is incurred.	Low
DS #2 – Determine if the chemical and/or physical properties of the waste material exceed the disposal facility's waste acceptance criteria limits.			
PSQ #3 – Is the waste material a listed dangerous waste?			
3-1	The waste material is a listed dangerous waste and receives a listed waste code.	Waste is managed as a non-listed dangerous waste and improperly disposed.	Severe

Table 2-1. Summary of DQO Step 2 Information.

PSQ-AA#	Alternative Action	Description of Consequences of Implementing the Wrong Alternative Action	Severity of Consequences (Low/Moderate / Severe)
3-2	The waste material is not a listed dangerous waste and is not regulated as such.	Waste is managed as a listed dangerous waste and improperly disposed. Additional project costs incurred.	Low
DS #3 – Determine if the waste material is regulated as listed dangerous waste.			
PSQ #4 – Is the waste material a characteristic dangerous waste (e.g., ignitable, corrosive, reactive, or toxic)?			
4-1	The waste material is a characteristic dangerous waste (e.g., corrosive, ignitable, reactive, and/or toxic) and receives a characteristic waste code.	Waste is managed as a noncharacteristic dangerous waste and improperly disposed.	Severe
4-2	The waste material is not a characteristic dangerous waste (e.g., corrosive, ignitable, reactive, and/or toxic) and is not regulated as such.	Waste is managed as a characteristic dangerous waste and improperly disposed. Additional project costs incurred.	Low
DS #4 – Determine if the characteristic dangerous waste codes (e.g., corrosivity, ignitability, reactivity, and toxicity) apply to the waste material.			
PSQ #5 – Is the waste material a toxic dangerous waste per Washington State criteria?			
5-1	The waste material is a toxic dangerous waste per Washington State criteria and receives a toxic dangerous waste code.	Waste is managed as a non-toxic dangerous waste and improperly disposed.	Severe
5-2	The waste material is not a toxic dangerous waste per Washington State criteria and is not regulated as such.	Waste is managed as a toxic dangerous waste and improperly disposed. Additional project costs incurred.	Low
DS #5 – Determine if the waste material meets the definition of a toxic dangerous waste in accordance with Washington State criteria.			
PSQ #6 – Is the waste material a persistent dangerous waste in accordance with Washington State criteria?			
6-1	The waste material meets the definition of a persistent dangerous waste in accordance with Washington State criteria.	Waste is managed as a non-persistent dangerous waste and improperly disposed.	Severe
6-2	The waste material does not meet the definition of a persistent dangerous waste in accordance with Washington State criteria.	Waste is managed as a persistent dangerous waste and improperly disposed. Additional project cost incurred.	Low
DS #6 – Determine if the waste material meets the definition of a persistent dangerous waste in accordance with Washing State criteria			
PSQ #7 – Is the waste material a PCB waste?			
7-1	The waste material is regulated due to PCB concentrations.	Waste is managed as a non-PCB regulated waste and improperly disposed.	Severe

Table 2-1. Summary of DQO Step 2 Information.

PSQ-AA#	Alternative Action	Description of Consequences of Implementing the Wrong Alternative Action	Severity of Consequences (Low/Moderate / Severe)
7-2	The waste material is not regulated due to PCB concentrations	Waste is managed as a PCB regulated waste and improperly disposed.	Low
DS #7 – Determine if the waste material is regulated due to PCB concentrations.			
PSQ #8– Is the waste material ACM?			
8-1	The waste material is regulated due to asbestos content.	Waste is managed as non-ACM and improperly disposed.	Severe
8-2	The waste material is not regulated due to asbestos content.	Waste is managed, as an ACM and improperly disposed. Additional project cost incurred.	Low
DS #8 – Determine if the waste material is regulated due to asbestos content.			
PSQ #9 – Is the waste material LDR?			
9-1	The waste material is LDR. Treatment is imposed on the debris prior to disposal.	Waste is managed and disposed as non-LDR waste when it should have been treated.	Severe
9-2	The waste material is not land disposal restricted. Treatment is not required for the debris prior to disposal. The debris will be disposed in an onsite facility without treatment.	Waste is managed and disposed as LDR waste. Additional project costs incurred.	Low
DS #9 – Determine if LDRs impose treatment for waste material.			
PSQ #10 – Does the material meet the requirements for recycling?			
10-1	The affected media meets the requirements for recycling.	Waste is disposed when it should have been recycled. Additional project costs incurred.	Low
10-2	The affected media does not meet the requirements for recycling and must be managed as a waste material.	Waste is improperly recycled when it should have been disposed.	Severe
DS #10 – Determine if the affected media meets the recycling requirements.			

[a] The definition of dangerous waste also includes hazardous waste.

LDR = land disposal restriction

3.0 STEP 3 – IDENTIFY INPUTS TO THE DECISION

The purpose of DQO Step 3 is to identify the type of information needed to resolve each of the DSs identified in DQO Step 2. The information may already exist or may be derived from computational or surveying/sampling and analysis methods. Analytical performance requirements (e.g., practical quantitation limit [PQL], precision, and accuracy) are also provided in this step for any new data that need to be collected.

3.1 INFORMATION REQUIRED TO RESOLVE DECISION STATEMENTS

Tables 3-1 includes the information needed to resolve the DSs, and existing data are evaluated for use. Table 3-1 identifies the DSs where existing data are available, do not exist, and are of sufficient or insufficient quality to resolve the DSs. For those cases where data do not exist or are insufficient to resolve the DS, the table identifies computational and/or surveying/sampling information that could be used to obtain the required data.

As noted in Table 3-1, sufficient information may be based on process knowledge (provided such knowledge can be demonstrated to be sufficient for proper designation) and environmental measurements. If a waste is designated as dangerous, compliance with land disposal restrictions (LDRs) must be demonstrated based on testing, as process knowledge is not sufficient to demonstrate compliance with LDR standards prior to disposal (40 CFR 268). However, sampling the wastes after treatment is beyond the scope of the sampling design presented in this DQO summary report, as the final waste forms (and volume) of treated wastes (if any) are unknown at this time. This is also noted in DQO Step 5.

Table 3-1. Required Information and Reference Sources.

DS #	Informational Need	WS #	Required Data	Do Data Exist? (Y/N)	Available Information	Sufficient Data? (Y/N)	Additional Computational Methods Needed	Additional Survey/Sampling Information Needed
1	Radionuclides	1and 4	Radiological activity in the waste material	Y	Process knowledge, MSDS, existing laboratory data (Table 1-3)	N	Engineering evaluation/ calculation	NDA, radiological surveys and smears and/or sampling & analysis
		2		Y	Process knowledge, MSDS, existing laboratory data (Table 1-3)	N	Engineering evaluation/ calculation	Radiological surveys, media sampling and analysis
		3		Y	Process knowledge, MSDS, existing laboratory data (Table 1-3)	N	Engineering evaluation/ calculation	Radiological surveys, media sampling and analysis
		5 through 16		N	Process knowledge	N	N/A to these waste streams	Radiological surveys, media sampling and analysis
2	Chemical contaminants	1 and 4	Chemical concentration and/or physical properties	N	Process knowledge, MSDS, existing laboratory data (Table 1-3)	N	N/A to these waste streams	Additional research of process knowledge, MSDS, and/or media sampling/analysis
		2		Y	Process knowledge, MSDS, existing laboratory data (Table 1-3)	N	Engineering evaluation/ calculation	Additional research of process knowledge, MSDS, and/or media sampling/analysis
		3		Y	Process knowledge, MSDS, existing laboratory data (Table 1-3)	N	Engineering evaluation/ calculation	Additional research of process knowledge, MSDS, and/or media sampling/analysis
		5 through 16		N	Process knowledge, MSDS.	N	None	Additional research of process knowledge, MSDS, and/or media sampling/analysis
3	Listed dangerous waste status	All	Chemical constituents of materials	Y	Process knowledge	N	None	Additional research of process knowledge, and/or media sampling/analysis
4	Characteristic dangerous waste code status	1 and 4	Chemical and/or physical	Y	Process knowledge, MSDS, existing laboratory data (Table 1-3)	N	Engineering calculations	Additional research of process knowledge, and/or media sampling/analysis

Table 3-1. Required Information and Reference Sources.

DS #	Informational Need	WS #	Required Data	Do Data Exist? (Y/N)	Available Information	Sufficient Data? (Y/N)	Additional Computational Methods Needed	Additional Survey/Sampling Information Needed
		2	properties	Y	Process knowledge, MSDS, existing laboratory data (Table 1-3)	N	Engineering calculations	Additional research of process knowledge, and/or media sampling/analysis
		3		Y	Process knowledge, MSDS, existing laboratory data (Table 1-3)	N	Engineering calculations	Chemical information collected for DS #2
		5 through 16		Y	Existing designation of routine waste streams that are common in all Central Plateau D&D facilities	Y	None	None
5	Toxic dangerous waste code status	1 and 4	Chemical and/or physical properties	Y	Process knowledge, MSDS, existing laboratory data (Table 1-3)	Y	None	None
		2		Y	Process knowledge, MSDS, existing laboratory data (Table 1-3)	N	Engineering calculations	Additional research of process knowledge, and/or media sampling/analysis
		3		N	Process knowledge	N	Engineering calculations	Chemical information collected for DS #2
		5 through 16		Y	Process knowledge, MSDS, existing laboratory data (Table 1-3)	Y	None	None
6	Persistent dangerous waste code status	13	Chemical and/or physical properties	N	Process knowledge	N	None	Media sampling and analysis and chemical information collected for DS #2
7	PCB concentrations	7, 13	Chemical concentration and/or physical properties	N	Process knowledge	N	None	Media sampling and analysis and chemical information collected for DS #2
8	Asbestos contamination	4	Percent of asbestos in the waste material	N	Process knowledge	N	None	Media sampling and analysis and chemical information collected for DS #2

Table 3-1. Required Information and Reference Sources.

DS #	Informational Need	WS #	Required Data	Do Data Exist? (Y/N)	Available Information	Sufficient Data? (Y/N)	Additional Computational Methods Needed	Additional Survey/Sampling Information Needed
9	LDRs	All		Y	Process knowledge, MSDS	N	None	Additional research of process knowledge, and/or media sampling/analysis and chemical information collected for DS #2-7, 9
10	Radionuclides	Only applies to 5 through 16	Radiological activity of waste materials	Y	Data collection for general waste designation to answer DS #1	N	N/A	Radiological information collected for DS #1 and / or radiological instrument surveys
	Chemical contaminants		Chemical and/or physical properties of the waste materials	Y	Data collection for general waste designation to answer DS #2	N	N/A	Chemical information collected for DS #2

MSDS = material safety data sheet
N/A = not applicable
NDA = nondestructive assay

3.2 ENGINEERING CALCULATIONS

Engineering calculations will need to be prepared or existing calculations will need to be revised to support radiological waste inventories and scaling factors and to develop chemical waste inventories prior to removal and final disposition of many waste streams, as determined in Table 3-1. The engineering calculations will use existing data or additional data that is required to be collected prior to final waste disposition. These waste calculations will assist in the determination of final designation and packaging and will be used by Waste Management and Transportation in association with the appropriate waste profiles.

3.3 DANGEROUS WASTE EVALUATION

The waste streams that are being evaluated for regulation under the Land Disposal Restrictions (LDRs) include those waste streams with paint coatings, used oils, and grease and the residues associated with the tanks, centrifuges and piping. The paint is only a small percentage of the total debris (e.g., concrete, tanks, pumps, equipment, and sheetrock) being disposed but is of concern because of potential target compound metals. The paint will not be separated from the substrate before disposal; therefore, the likelihood of failing LDRs for these waste streams is low. The use of process knowledge, material safety data sheet (MSDS) information, and/or the collection of paint samples will be needed to evaluate this material. The average thickness of paint will be estimated and process knowledge, MSDS information, and/or laboratory data will be used to calculate the total volume of paint based on the appropriate volume of the waste stream to which the paint is applied.

The oils, greases, and small amounts of other liquid may be segregated in containers. Each container will become a sample boundary and evaluated separately. The COCs for the oils and grease are not complex. If the laboratory detection limits are higher than the target compound regulatory levels, then the waste will be appropriately designated (see Section 1.4.2). No engineering calculations will be required in support of final disposition. The laboratory data will be used to confirm contamination levels in the waste stream materials and to determine appropriate disposition of the waste materials. Containerized aqueous liquids and petroleum products may be evaluated for reuse or recycling.

The accumulation of target compound metals in the residues found in tanks and equipment needs to be determined. Samples will need to be collected from the tanks, centrifuges and piping as available and sent to the laboratory for analysis to determine the concentration of *Resource Conservation and Recovery Act of 1976* (RCRA) chemical contaminants in the material. The laboratory data will need to be evaluated to support final disposition of these waste streams. The evaluation and supporting calculations will use the tank or equipment mass and appropriate fixatives/stabilization materials to determine concentrations for chemical contaminants.

3.4 ISOTOPIC EVALUATION

Process history and existing analytical data show that the residues in several tanks and centrifuges may exceed the radiological ERDF criteria and require additional evaluation prior to final disposition and packaging. The existing data needs to be verified by selective sampling, to confirm the isotopic mixture of these waste streams. The existing engineering calculations will need to be revised to adequately calculate the final isotopic concentrations in the waste to assist with the final removal design for appropriate waste disposition and packaging.

Nondestructive assay (NDA) using high-resolution germanium gamma spectroscopy will be used to detect gamma radiation emitted from selected tanks and centrifuges as identified in Table 7-1. Not all of

the radionuclides of interest that are present in these waste streams can be directly measured through gamma spectroscopy, therefore, isotopic ratios or scaling factors must be provided for the non-detectable nuclides. The isotopic ratios and scaling factors can be obtained with engineering calculations and physical samples of representative residue material, as well as correlations with existing data. The NDA information will be used to support waste designations and the final disposal approach. The evaluation and supporting calculations will use the tank or equipment mass and appropriate fixatives/stabilization materials to determine concentrations for radiological contaminants.

3.5 ANOMOLOUS WASTE

As described in Section 1.0, the anomalous waste category includes unplanned or unexpected material discovered during D&D that will require sampling and analysis to support disposition. The anomalous waste category is provided to allow field decision making based on "as-found" conditions discovered during demolition. Waste Management will support the final determination by using process knowledge, historical information, and required sample analysis on a case-by-case basis.

3.6 FIELD MEASUREMENT METHODS AND ANALYTICAL PERFORMANCE REQUIREMENTS

Table 3-2 defines the analytical performance requirements for the data that need to be collected to resolve each of the DSs for the solids and oils that require additional analytical data. Table 3-3 defines the analytical performance requirements for the data that need to be collected to resolve each of the DSs for aqueous liquids. These tables also reflect additional analyses that are associated with anomalous media (i.e., liquids and solids) that may be found during D&D activities and must meet ETF and/or ERDF analytical criteria, as well as the analysis requirements to determine if waste can be recycled. The specific methods (e.g., EPA Method 6010B), based on contracts with the standard fixed laboratory, will be identified in the SAP. The action level and performance requirements include the required detection limit (RDL) and precision and accuracy requirements.

Table 3-2. Analytical Performance Requirements for Solid/Other Materials.

Analyte	Analytical Method	Action Level[e,f]	RDL Requirement[e,f]	Accuracy (% Recovery)	Precision (% RPD)
Radiological Constituents					
Americium-241	AmAEA	2 pCi/g	1 pCi/g	70-130[a]	±30[a]
Cesium-137	GEA	10 pCi/g	0.1 pCi/g	70-130[a]	±30[a]
Cobalt-60	GEA	10 pCi/g	0.05 pCi/g	70-130[a]	±30[a]
Europium-152	GEA	10 pCi/g	0.1 pCi/g	70-130[a]	±30[a]
Europium-154	GEA	10 pCi/g	0.1 pCi/g	70-130[a]	±30[a]
Europium-155	GEA	2 pCi/g	0.1 pCi/g	70-130[a]	±30[a]
Neptunium-237	NpAEA	2 pCi/g	1 pCi/g	70-130[a]	±30[a]
Plutonium-238	PuAEA	2 pCi/g	1 pCi/g	70-130[a]	±30[a]
Plutonium-239 /240	PuAEA	2 pCi/g	1 pCi/g	70-130[a]	±30[a]
Total strontium	Rad-Sr	10 pCi/g	1 pCi/g	70-130[a]	±30[a]
Technetium-99	Liquid scintillation	30 pCi/g	15 pCi/g	70-130[a]	±30[a]
Uranium-238	UAEA	2 pCi/g	1 pCi/g	70-130[a]	±30[a]

Table 3-2. Analytical Performance Requirements for Solid/Other Materials.

Analyte	Analytical Method	Action Level[e,f]	RDL Requirement[e,f]	Accuracy (% Recovery)	Precision (% RPD)
Nonradiological Constituents – Metals					
Arsenic	EPA Method 6010	100 mg/kg	10 mg/kg	70-130[b]	±30[b]
	EPA Method 1311/6010	5.0 mg/L[c]	0.5 mg/L	70-130[b]	±30[b]
Barium	EPA Method 6010	2,000 mg/kg	2 mg/kg	70-130[b]	±30[b]
	EPA Method 1311/6010	100 mg/L[c]	10 mg/L	70-130[b]	±30[b]
Cadmium	EPA Method 6010	20 mg/kg	0.5 mg/kg	70-130[b]	±30[b]
	EPA Method 1311/6010	1.0 mg/L[c]	0.1 mg/L	70-130[b]	±30[b]
Chromium	EPA Method 6010	100 mg/kg	10 mg/kg	70-130[b]	±30[b]
	EPA Method 1311/6010	5.0 mg/L[c]	0.5 mg/L	70-130[b]	±30[b]
Lead	EPA Method 6010	100 mg/kg	5 mg/kg	70-130[b]	±30[b]
	EPA Method 1311/6010	5.0 mg/L[c]	0.5 mg/L	70-130[b]	±30[b]
Mercury	EPA Method 200.8	4.0 mg/kg	0.2 mg/kg	70-130[b]	±30[b]
	EPA Method 1311/200.8	0.2 mg/L[c]	0.02 mg/L	70-130[b]	±30[b]
Silver	EPA Method 6010	100 mg/kg	1 mg/kg	70-130[b]	±30[b]
	EPA Method 1311/6010	5.0 mg/L[c]	0.5 mg/L	70-130[b]	±30[b]
Nonradiological Constituents – General Inorganics					
Ammonia	EPA Methods 350.1, 2 or 3	None	0.5 mg/kg	70-130[b]	±30[b]
Asbestos	PLM	Note (g)	Note (g)	N/A	N/A
Sulfide	EPA 9030	None	5 mg/kg	70-130[b]	±30[b]
Organic Compounds					
PCBs	EPA Method 8082	2 mg/kg	0.017 mg/kg	70-130[d]	±30[d]
Waste Characteristics					
Corrosivity	EPA Method 9045 (pH)	2.0 <pH <12.5	0.1 pH unit	70-130[b]	±30[b]
Gross alpha	Proportional counting	5 pCi/g	10 pCi/g	70-130[a]	±30[a]
Gross beta	Proportional counting	10 pCi/g	15 pCi/g	70-130[a]	±30[a]
Ignitability (flash point)	EPA Method 1010	<140°F	N/A	N/A	N/A
TOX	EPA Method 9020	1,000 mg/kg	0.5 mg/kg	70-130[c]	±30[c]

Table 3-2. Analytical Performance Requirements for Solid/Other Materials.

Analyte	Analytical Method	Action Level[e,f]	RDL Requirement[e,f]	Accuracy (% Recovery)	Precision (% RPD)

[a] Accuracy criteria for associated batch laboratory control sample percent recoveries. With the exception of GEA, additional analysis-specific evaluations also performed for matrix spikes, tracers, and carriers, as appropriate to the method. Precision criteria for batch laboratory replicate sample analyses.
[b] Accuracy criteria for associated batch matrix spike percent recoveries. Evaluation based on statistical control of laboratory control samples also performed. Precision criteria for batch laboratory replicate matrix sample analyses or replicate sample analyses.
[c] Lower action level may be needed to determine land disposal treatment requirements.
[d] Accuracy criteria are the minimum for associated batch laboratory control sample percent recoveries. Laboratories must meet statistically-based control, if more stringent. Additional analyte-specific evaluations were also performed for matrix spices and surrogates, as appropriate to the method. Precision criteria for batch laboratory replicate matrix sample analyses.
[e] The 222-S Laboratory may be used for sample analyses due to high sample Pu content or dose rates. Laboratory procedures based on EPA SW-846 methods will be used. This approach has been accepted by Washington State Department of Ecology due to the ALARA concerns with the samples and how they must be handled in the 222-S Lab.
[f] MDLs for the 222-S laboratory are orders of magnitude higher than these values and will be acceptable since only the very high content samples will be sent to 222-S for radionuclide quantification. The 222-S lab will not be used for any kind of clearance sampling that could require these low MDLs.
[g] For soils asbestos fibers will be determined to be either None, Trace Detectable, or Obvious/Significant.

AEA = alpha energy analysis
EPA = EPA's *Test Methods for Evaluating Solid Waste: Physical and Chemical Methods* (SW-846 [EPA 1997]), except for Methods 300.0 and 418.1 (from EPA's *Methods for Chemical Analysis of Water and Wastes* [EPA 1983]).
GEA = gamma energy analysis
N/A = not applicable
PLM = polarized light microscopy
RPD = relative percent difference
TOX = total organic halides

Table 3-3. Analytical Performance Requirements for Liquid Materials.

Analyte	Analytical Method	Action Level[d,e]	RDL Requirement[d,e]	Accuracy (% Recovery)	Precision (% RPD)
Radiological Constituents					
Americium-241	AmAEA	None	1 pCi/L	80-120[a]	±20[a]
Cesium-137	GEA	None	15 pCi/L	80-120[a]	±20[a]
Cobalt-60	GEA	None	25 pCi/L	80-120[a]	±20[a]
Europium-152	GEA	None	50 pCi/L	80-120[a]	±20[a]
Europium-154	GEA	None	50 pCi/L	80-120[a]	±20[a]
Europium-155	GEA	None	50 pCi/L	80-120[a]	±20[a]
Neptunium-237	NpAEA	None	1 pCi/L	80-120[a]	±20[a]
Plutonium-238	PuAEA	None	1 pCi/L	80-120[a]	±20[a]
Plutonium-239 /240	PuAEA	None	1 pCi/L	80-120[a]	±20[a]
Total strontium	Rad-Sr	None	2 pCi/L	80-120[a]	±20[a]
Technetium-99	Liquid scintillation	None	15 pCi/L	80-120[a]	±20[a]
Tritium	Liquid scintillation	None	400 pCi/L	80-120[a]	±20[a]

Table 3-3. Analytical Performance Requirements for Liquid Materials.

Analyte	Analytical Method	Action Level [d,e]	RDL Requirement [d,e]	Accuracy (% Recovery)	Precision (% RPD)
Nonradiological Constituents – Metals					
Arsenic	EPA Method 6010	None [c]	100 µg/L	80-120[b]	±20[b]
Barium	EPA Method 6010	None [c]	20 µg/L	80-120[b]	±20[b]
Cadmium	EPA Method 6010	None [c]	5 µg/L	80-120[b]	±20[b]
Chromium	EPA Method 6010	None [c]	10 µg/L	80-120[b]	±20[b]
Lead	EPA Method 6010	None [c]	50 µg/L	80-120[b]	±20[b]
Magnesium	EPA Method 6010	None	750 µg/L	80-120[b]	±20[b]
Manganese	EPA Method 6010	None	5 µg/L	80-120[b]	±20[b]
Mercury	EPA Method 200.8	None [c]	0.5 µg/L	80-120[b]	±20[b]
Nickel	EPA Method 6010	None [c]	40 µg/L	80-120[b]	±20[b]
Potassium	EPA Method 6010	None	4,000 µg/L	80-120[b]	±20[b]
Silicon	EPA Method 6010	None	20 µg/L	80-120[b]	±20[b]
Silver	EPA Method 6010	None [c]	10 µg/L	80-120[b]	±20[b]
Sodium	EPA Method 6010	None	500 µg/L	80-120[b]	±20[b]
Nonradiological Constituents – General Inorganics					
Ammonium	EPA Methods 300.7	100,000 mg/L	50 µg/L	80-120[b]	±20[b]
Chloride	EPA Method 300.0	None	200 µg/L	80-120[b]	±20[b]
Fluoride	EPA Method 300.0	None	500 µg/L	80-120[b]	±20[b]
Nitrate	EPA Method 300.0	None	250 µg/L	80-120[b]	±20[b]
Nitrite	EPA Method 300.0	None	250 µg/L	80-120[b]	±20[b]
Phosphate	EPA Method 300.0	None	500 µg/L	80-120[b]	±20[b]
Sulfide	EPA Method 9030	None	500 µg/L	80-120[b]	±20[b]
Sulfate	EPA Method 300.0	None	500 µg/L	80-120[b]	±20[b]
Waste Characteristics					
Conductivity	EPA Method 120.1	None	1 µmho/cm^3	80-120[b]	±20[b]
Corrosivity	EPA Method 150.1 (pH)	0.5 <pH <13.0	0.1 pH unit	80-120[b]	±20[b]
Gross alpha	Proportional counting	None	3 pCi/L	80-120[a]	±20[a]
Gross beta	Proportional counting	None	4 pCi/L	80-120[a]	±20[a]
TDS	EPA Method 160.1	None	10 mg/L	80-120[b]	±20[b]
TOC	EPA Method 415 or 9060	None	1 mg/L	80-120[b]	±20[b]
TSS	EPA Method 160.2	None	5 mg/L	80-120[b]	±20[b]

Table 3-3. Analytical Performance Requirements for Liquid Materials.

Analyte	Analytical Method	Action Level [d,e]	RDL Requirement [d,e]	Accuracy (% Recovery)	Precision (% RPD)

[a] Accuracy criteria for associated batch laboratory control sample percent recoveries. With the exception of GEA, additional analysis-specific evaluations also performed for matrix spikes, tracers, and carriers, as appropriate to the method. Precision criteria for batch laboratory replicate sample analyses.
[b] Accuracy criteria for associated batch matrix spike percent recoveries. Evaluation based on statistical control of laboratory control samples also performed. Precision criteria for batch laboratory replicate matrix sample analyses or replicate sample analyses.
[c] Lower action level may be needed to determine land disposal treatment requirements.
[d] The 222-S Laboratory may be used for sample analyses due to high sample Pu content or dose rates. Laboratory procedures based on EPA 600/4-79-020 methods will be used. This approach has been accepted by Washington State Department of Ecology due to the ALARA concerns with the samples and how they must be handled in the 222-S Lab.
[e] MDLs for the 222-S laboratory are orders of magnitude higher than these values and will be acceptable since only the very high content samples will be sent to 222-S for radionuclide quantification. The 222-S lab will not be used for any kind of clearance sampling that could require these low MDLs.

EPA = EPA's *Test Methods for Evaluating Solid Waste: Physical and Chemical Methods* (SW-846 [EPA 1997]), except for Methods 300.0 and 418.1 (from EPA's *Methods for Chemical Analysis of Water and Wastes* [EPA 1983]).
TDS = total dissolved solids
TSS = total suspended solids

3.7 RADIOLOGICAL SURVEY PERFORMANCE REQUIREMENTS

Table 3-4 defines the radiological survey instrument performance requirements for the data that need to be collected to resolve each of the DSs.

Table 3-4. Radiological Survey Instrument Performance Requirements.

Analyte	Analytical Method	Action Level/ Detection Limit	Accuracy Requirement	Precision Requirement
Standard Survey Instruments				
Dose rate	Portable NaI detector or Bicron[a] µrem meter or ion chamber	0.1 mR/h	b	b
Removable alpha	Bench-top scaler for removable alpha	20 dpm/100 cm^2	b	b
Total (fixed + removable) alpha		100 dpm/100 cm^2		
	Portable radiation detection instruments (such as PAM alpha survey instrument, Pancake G-M survey instrument)	0.2 mrem/hr direct		
Removable beta-gamma		1,000 dpm/ 100 cm^2		
Total (fixed + removable) beta-gamma		5,000 dpm/ 100 cm^2		

[a] Bicron/NE, Solon, Ohio.
[b] In accordance with manufacturer's specifications.
dpm = disintegrations per minute
NaI = sodium iodide

3.8 NDA PERFORMANCE REQUIREMENTS

Table 3-5 provides the methods for obtaining the concentration of each radionuclide using NDA equipment and the action levels at which the measured materials would be unacceptable for disposal at the ERDF.

3.8.1 Measurement uncertainty

Measurement uncertainty is inherent in all nondestructive assay systems, due to both random and systematic elements. Total measurement uncertainty is typically stated at the 95 percent confidence level. Efforts should be made in planning an assay collection to minimize influences that compound data collection uncertainty. Measurement uncertainty contributions include but are not limited to:

- Item/Container count duration
- Use of multiple detectors or larger intrinsically efficient single detectors to increase detector efficiency.
- Reduce the Item/Container to detector distance.
- Install lead shielding around NDA system to reduce contributions from background radiation.
- Remove sources of background radiation that are in or near the vicinity of the NDA system.
- Orient NDA counting system away from areas of increased radiation activity.
- Do not cross contaminate NDA counting area/system.

3.8.2 MDA

The minimum detectable activity (MDA) is a function of the size, and density of the waste item, the distance of the detector from the waste item, the detector counts, etc. The MDA can be directly calculated by the assay software for each measurement. If measured values are not reported, the NDA analyst will use the calculated MDA result in lieu of the measured value to determine the upper bound for the item activity.

To obtain a reasonable quantification of the radionuclide concentrations, an efficiency calibration must be developed to account for the item geometry and the attenuators and matrix elements within the item that will attenuate or absorb the gamma radiation. This is accomplished through a commercial modeling program. The analyst uses the information concerning the item weight and dimensions, material of construction, and source distributions to model the item to be assayed. The program generates an efficiency calibration curve for the item. The efficiency curve is applied to the spectrum generated by the germanium detector to provide a quantitative value for the detected radionuclides or a MDA for radionuclides that are not detected. The efficiency calibration curve produced from the modeling accounts for the effects from the attenuation, geometric correction factors, and source distributions.

Not all of the radionuclides of interest that are present in the waste generated from D&D activities can be directly measured through gamma spectroscopy; therefore, isotopic ratios or scaling factors must be provided for the non-detectable nuclides. These nuclides can be obtained through process knowledge, through destructive laboratory sample analysis, or for plutonium isotopes can be obtained through specialized plutonium isotopic analysis software. The plutonium isotopic analysis can only be obtained for items with significant gram quantities of plutonium. The normal calculation for the plutonium content is based on a measured plutonium-239 quantity multiplied by the isotopic ratios for the other plutonium isotopes. Applicable isotopic ratios will be used to determine the concentration of non-measurable isotopes for all the waste items generated at the corresponding D&D project.

For very low-activity measurements (typically in the LLW range), the plutonium-239 gamma energy lines may be below detection levels. Therefore, the only detectable peak that can be used to calculate the content of the actinides in the item may be the 59.5 KeV americium-241 line. Although this line has a high abundance, the low-energy gamma peak is significantly modified by changes in the absorbers or matrix elements, and also significantly affected by the assumptions of internal versus external contamination. The use of the low-energy americium-241 line to calculate the TRU activity will be used only for light-weight items (typically less than 10 lbs). NDA subcontractor needs to be aware of these limitations and apply an appropriate level of conservatism to the analysis.

Table 3-5. Analytical Performance Requirements for NDA.

Measurable Radionuclides[a]	Analytical Method	Action Level	Minimum Detectable Activity (Expected)
Am-241	NDA	TRU/GTCC	≈20 nCi/g
Pu-239		TRU/GTCC	≈30 nCi/g
Np-237		TRU/GTCC	$\approx 10^{-2}$ nCi/g
Cs-137		2.7E+7 pCi/g	$\approx 10^{-1}$ nCi/g
Co-60		3.81E+6 pCi/g	$\approx 10^{-1}$ nCi/g

[a] Not all of the radionuclides of interest can be directly measured through gamma spectroscopy, therefore, isotopic ratios or scaling factors must be provided for the non-detectable nuclides (Section 3.4).

Note: In cases where both TRU and GTCC are listed as action levels, the isotope is subject to both limits and the more limiting of the two will be considered to be the action level.

TRU = The action level of "TRU" indicates the transuranic waste definition is the limiting factor. The activities of all transuranic alpha-emitting isotopes with a half-life of greater than 20 years must be less than 100 nCi/g in total.

GTCC = The action level of "GTCC" indicates that the "greater than Class C" waste definition is the limiting factor (defined in 10 CFR 61.55).

4.0 STEP 4 – DEFINE THE BOUNDARIES OF THE STUDY

The primary objective of DQO Step 4 is to identify the population of interest, define the spatial and temporal boundaries that apply to each DS, define the scale of decision making, and identify any practical constraints (i.e., hindrances or obstacles) that must be taken into consideration for the sampling design. Implementing this step ensures that the sampling design will result in the collection of data that accurately reflect the true condition of the facility under investigation.

4.1 POPULATION OF INTEREST

Prior to defining the spatial and temporal boundaries of the area under investigation, it is first necessary to clearly define the populations of interest that apply for each DS (Table 4-1). The intent of Table 4-1 is to clearly define the attributes that make up each population of interest by stating them in a way that makes the focus of the study unambiguous.

Table 4-1. Characteristics that Define the Population of Interest.

DS #	Population of Interest
1	Radiological contamination in the waste material
2	Chemical contamination levels and/or physical properties of the waste material
3, 4, 5, and 6	Waste designation codes for the building waste materials
7	PCB contamination in the waste materials
8	Asbestos contamination levels of building waste materials
9	LDR evaluation of waste materials
10	Materials intended for recycling or reuse

4.2 ZONES WITH HOMOGENOUS CHARACTERISTICS

The elements of the population are segregated into zones or subsets that exhibit relatively homogenous characteristics in DQO Step 4. This distinction has already been made by the identification of waste streams in Table 1-12.

4.3 SPATIAL SCALE OF DECISION MAKING

The spatial scale of decision making for this DQO process are the individual waste streams identified in the 224-B facility.

4.4 TEMPORAL BOUNDARIES

Table 4-2 identifies temporal boundaries that may apply to each DS. The temporal boundary refers to both the timeframe over which each DS applies (e.g., number of years) and when (e.g., season, time of day, and weather conditions) the data should optimally be collected.

Table 4-2. Temporal Boundaries of the Investigation.

DS #	WS #	Timeframe	When to Collect Data
All	All	1,000 years	No temporal boundaries have been identified for collection of data for D&D activities.

4.5 PRACTICAL CONSTRAINTS

Table 4-3 identifies the practical constraints that may impact the data collection effort. These constraints include physical barriers, difficult sample matrices, or any other condition that will need to be taken into consideration in the design and scheduling of the sampling program.

Table 4-3. Practical Constraints on Data Collection.

- Soils under the slab are more easily accessible after the slab-on-grade condition is achieved and the soil samples less vulnerable to gross cross contamination when the great majority of the source term has been removed with the building rubble.
- The paints are not considered uniformly distributed. There are several types of paint and primers throughout the facility, each type or color needs to be addressed separately.
- Residues in the tanks, centrifuges and piping are not easily accessible. There is limited physical ability to collect a representative sample in its current configuration.
- Roofing materials may be found containing more than one layer, with old and new roofing materials existing in the same area.

5.0 STEP 5 – DEVELOP DECISION RULES

The preceding sections present the basis for making decisions for characterization and final disposition of the waste streams identified in Table 1-12. Step 5 of the DQO process develops the decision rules, which establish specific criteria for these determinations.

5.1 PARAMETER OF INTEREST

A sampling design (based on professional judgment) and worst-case (authoritative) sampling will be used to determine the maximum levels of radiological and chemical contamination. The parameter of interest will be a single maximum analytical value for every constituent in each waste stream that will be compared with the waste acceptance criteria decision levels.

5.2 FINAL ACTION LEVELS

The concentration or action levels for disposal/recycling/reuse options are described in Tables 5-1 through 5-5. The most restrictive concentration limits or action levels for the disposal/recycling/reuse options are used for the materials included in this DQO summary report. By meeting the analytical requirements for the most restrictive disposal/recycling/reuse options, the data will be adequate for other less restrictive options. These tables also reflect analysis that may be associated with the anomalous media (i.e., liquids and solids) that may be found during D&D activities and must meet ETF and/or ERDF analytical criteria.

The limits for each option are shown for only the COCs identified for waste streams within the scope of this DQO, or for other applicable criteria. Specific waste acceptance criteria for a given facility or option may be much more comprehensive.

Table 5-1. Concentration Limits – Environmental Restoration Disposal Facility.

COCs	Concentration Limits
PCBs[a]	500 mg/kg[b]
Metals[a]	
Arsenic	3,000 mg/kg
Barium	940,000 mg/kg
Cadmium	39,000 mg/kg
Chromium (total)	59,000 mg/kg
Manganese	440,000 mg/kg
Silver	350,000 mg/kg
Radionuclides[c]	
Americium-241	0.050 Ci/m^3 [d,e]
Cesium-137	32 Ci/m^3 [d]
Cobalt-60	Unlimited
Europium-152	21,000,000 Ci/m^3 [d]

Table 5-1. Concentration Limits – Environmental Restoration Disposal Facility.

COCs	Concentration Limits
Europium-154	Unlimited
Neptunium-237	0.0015 Ci/m^3 [d,e]
Plutonium-238	1.5 Ci/m^3 [d,e]
Plutonium-239	0.029 Ci/m^3 [d,e]
Plutonium-240	0.029 Ci/m^3 [d,e]
Plutonium-241	6.2 Ci/m^3 [e,f]
Plutonium-242	0.11 Ci/m^3 [e,f]
Strontium-90	7,000 Ci/m^3 [g]
Technetium-99	1.3 Ci/m^3 [f]
Tritium	Unlimited
Uranium-238 + daughters	0.012 Ci/m^3 [d]
Waste Characteristics	
Ignitability (flash point)	140°F[h]
pH	2 < pH <12.5
Moisture content	Fail

[a] Public exposure is limiting (DOE-RL 1994).
[b] ERDF cannot accept liquid wastes (including liquid wastes that are subsequently solidified) if the liquid contained greater than 50 ppm of PCBs at the point of origination.
[c] Radioactive waste Class C limits also apply (10 CFR 61).
[d] *Remedial Investigation and Feasibility Study Report for the Environmental Restoration Disposal Facility* (DOE-RL 1994).
[e] EDRF limit is lower of indicated value and TRU limit of 100 nCi/g.
[f] *Environmental Restoration Disposal Facility Performance Assessment* (Delorenzo et al. 1995).
[g] Class C limit in accordance with 10 CFR 61.
[h] Ignitable non-liquids in accordance with WAC 173-303-090(5)(a)(ii). Capable under standard temperature and pressure of causing fire through friction, absorption of moisture, or spontaneous chemical changes, and when ignited, burns so vigorously and persistently that it creates a hazard.

Table 5-2. Action Levels – Dangerous Waste Limits – WAC 173-303.

COCs	Action Levels[a]	
	Totals	TCLP
Ag	100 mg/kg	5 mg/L
As	100 mg/kg	5 mg/L
Ba	2,000 mg/kg	100 mg/L
Cd	20 mg/kg	1 mg/L
Cr	100 mg/kg	5 mg/L
Hg	4.0 mg/kg	0.2 mg/L
Pb	100 mg/kg	5 mg/L
PCBs	2 mg/kg	

Table 5-2. Action Levels – Dangerous Waste Limits – WAC 173-303.

COCs	Action Levels[a]	
	Totals	TCLP
Ignitability	<140°F	
pH	2.0 < pH <12.5	

[a] UHCs may require lower limits in accordance with 40 CFR 268.48.
TCLP = toxicity characteristic leaching procedure

Table 5-3. Analytical Requirements – Effluent Treatment Facility.

COCs	Concentration Limits
Metals	
Arsenic	The LDRs establish treatment limits for hazardous wastes containing underlying hazardous constituents. Information needed for development of ETF waste profile.
Barium	
Cadmium	
Chromium	
Lead	
Magnesium	
Manganese	
Mercury	
Nickel	
Potassium	
Silicon	
Silver	
Sodium	
Uranium	
Nonmetals	
Ammonia	100,000 mg/L
Chloride	The LDRs establish treatment limits for hazardous wastes containing underlying hazardous constituents. Information needed for development of ETF waste profile.
Fluoride	
Nitrate	
Nitrite	
Phosphate	
Sulphate	
Radionuclides	
Americium-241	The LDRs establish treatment limits for hazardous wastes containing underlying hazardous constituents. Information needed for development of ETF waste profile.
Cesium-137	
Cobalt-60	
Europium-154	
Europium-155	
Neptunium-237	
Plutonium-238	
Plutonium-239/240	
Strontium-90	
Technetium-99	
Tritium	
Waste Characteristics	
pH	0.5 < pH < 13.0

Table 5-3. Analytical Requirements – Effluent Treatment Facility.

COCs	Concentration Limits
Gross alpha	The LDRs establish treatment limits for hazardous wastes containing underlying hazardous constituents.
Gross beta	
TSS	
TDS	
TOC	Information needed for development of ETF waste profile.
Conductivity	

Table 5-4. Action Limits – Recycling Requirements for Used Oil.

COCs	Preliminary Action Levels
PCBs	2 mg/kg
TOX	1,000 mg/kg
Chemical constituents and characteristics	See Table 5-5
Radiological constituents	See Table 5-6

Table 5-5 below provides the release limits for materials that can be effectively surveyed and evaluated for free release.

Table 5-5. Summary of Surface Contamination Values[1]
in dpm/100 cm^2
(from PHMC Radiological Control Manual HNF-5173)

Radionuclide	Removable[2,4]	Total (Fixed + Removable)[2,3]
U-nat., U-235, U-238, and associated decay products	1,000[7]	5,000[7]
Transuranics, Ra-226, Ra-228, Th-230, Th-228, Pa-231, Ac-227, I-125, I-129	20	500
Th-nat, Th-232, Sr-90, Ra-223, Ra-224, U-232, I-126, I-131, I-133	200	1,000
Beta-gamma emitters (nuclides with decay modes other than alpha emission or spontaneous fission) except Sr-90 and others noted above[5]	1,000	5,000
Tritium and tritiated compounds[6]	10,000	N/A

1 The values in this table, with the exception noted in footnote 6 below, apply to radioactive contamination deposited on, but not incorporated into the interior or matrix of, the contaminated item. Where surface contamination by both alpha- and beta-gamma-emitting nuclides exists, the limits established for alpha- and beta-gamma-emitting nuclides apply independently.

2 As used in this table, dpm (disintegrations per minute) means the rate of emission by radioactive material as determined by correcting the counts per minute observed by an appropriate detector for background, efficiency, and geometric factors associated with the instrumentation.

3 The levels may be averaged over one square meter provided the maximum surface activity in any area of 100 cm2 is less than three times the value specified. For purposes of averaging, any square meter of surface shall [10 CFR 835, App. D, Note 3] be considered to be above the surface contamination value if: (1) from measurements of a representative number of sections it is determined that the average contamination level exceeds the applicable value; or (2) it is determined that the sum of the activity of all isolated spots or particles in any 100 cm 2 area exceeds three times the applicable value.

4 The amount of removable radioactive material per 100 cm2 of surface area should be determined by swiping the area with dry filter or soft absorbent paper, applying moderate pressure, and then assessing the amount of radioactive material on the swipe with an appropriate instrument of known efficiency. (Note - The use of dry material may not be appropriate for tritium.) When removable contamination on objects of surface area less than 100 cm2 is determined, the activity per unit area shall [10 CFR 835, App. D, Note 4] be based on the actual area and the

entire surface shall [10 CFR 835, App. D, Note 4] be wiped. It is not necessary to use swiping techniques to measure removable contamination levels if direct scan surveys indicate that the total residual surface contamination levels are within the limits for removable contamination.
5 This category of radionuclides includes mixed fission products, including the Sr-90, which is present in them. It does not apply to Sr-90 which has been separated from the other fission products or mixtures where the Sr-90 has been enriched.
6 Tritium contamination may diffuse into the volume or matrix of materials. Evaluation of surface contamination shall [10 CFR 835, App. D, Note 6] consider the extent to which such contamination may migrate to the surface in order to ensure the surface contamination value provided in this Table is not exceeded. Once this contamination migrates to the surface, it may be removable, not fixed; therefore, a "Total" value does not apply.
7 (alpha).

Table 5-6 provides the methods for obtaining the concentration of each radionuclide using NDA equipment and the action levels that would be unacceptable for disposal at ERDF.

Table 5-6. Analytical Methods and Action Levels for NDA.[a]

COCs	Action Levels	Basis	Analytical Method
Americium-241	TRU/GTCC	ERDF waste acceptance criteria (BHI-2002)	GEA by portable NDA or ratio compared to detected isotopes
Cesium-137	2.7E+7 pCi/g	ERDF safety analysis (BHI 2001)	GEA by portable NDA or ratio compared to detected isotopes
Cobalt-60	3.81E+6 pCi/g	ERDF safety analysis (BHI 2001)	GEA by portable NDA or ratio compared to detected isotopes
Neptunium-237	TRU/GTCC	ERDF waste acceptance criteria (BHI-2002)	GEA by portable NDA or ratio compared to detected isotopes
Plutonium-239	TRU/GTCC	ERDF waste acceptance criteria (BHI-2002)	GEA by portable NDA or ratio compared to detected isotopes

[a] Not all of the radionuclides of interest can be directly measured through gamma spectroscopy, therefore, isotopic ratios or scaling factors must be provided for the non-detectable nuclides. The isotopic ratios and scaling factors can be obtained with engineering calculations.
Note: In cases where both TRU and GTCC are listed as action levels, the isotope is subject to both limits and the more limiting of the two will be considered to be the action level.
TRU = The action level of "TRU" indicates the transuranic waste definition is the limiting factor. The activities of all transuranic alpha-emitting isotopes with a half-life of greater than 20 years must be less than 100 nCi/g in total.
GTCC = The action level of "GTCC" indicates that the "greater than Class C" waste definition is the limiting factor (defined in 10 CFR 61.55).

6.0 STEP 6 – SPECIFY TOLERABLE LIMITS ON DECISION ERRORS

One of the primary objectives normally accomplished in DQO Step 6 is the selection of a statistical or judgmental sample design. Characterization of the waste streams identified in this DQO process does not require statistically based sampling, as it deals with individual waste components.

The evaluation of the need for statistical and/or judgmental sampling also considers the potential consequences of erroneous decisions. The potential consequences for waste disposed at ERDF are generally acknowledged to have a low degree of severity (Table 2-1) because the matrix will reside in an engineered facility remote from human population centers; in addition, the waste is retrievable if necessary. Therefore, a focused sampling design is suited for obtaining waste characterization information for all of the waste streams identified as needing additional data for final disposition. Discrete samples will be collected from selected areas to determine the upper-bounding level of each contaminant of interest.

6.1 DECISION ERRORS

In general, two types of decision errors are associated with this project. The first is treating (i.e., managing and disposing) clean waste material as if it was contaminated. The second decision error is treating contaminated waste material as if it were clean. The second decision error, treating contaminated waste material as if it were clean, has the more severe consequence as the error could result in human health and/or ecological impacts.

6.2 NULL HYPOTHESIS

Table 6-1 identifies the null hypothesis that applies to the waste materials under investigation. The term "null hypothesis" refers to the baseline condition of the site, which has been defined based on historical data process knowledge, and existing analytical data.

Table 6-1. Defining the Null Hypothesis.

WS #	Null Hypothesis Statement	Indicate Selection
All	Waste materials are assumed to be radioactively and chemically contaminated until shown clean.	X
	Waste materials are assumed to be clean until shown to be radioactively and chemically contaminated.	

7.0 STEP 7 – OPTIMIZE THE DESIGN

The objective of DQO Step 7 is to present data collection designs that meet the minimum data quality requirements specified in DQO Steps 1 through 6.

7.1 FOCUSED SAMPLE DESIGN

A focused sampling design is suited to provide waste characterization information that will meet the DSs for all of the waste streams identified in this project. The sample design will incorporate historical information, process knowledge, and facility inspections, together with radiation surveys and discrete samples of selected waste materials, to determine the upper bounding level of each COC in each waste stream. The following sections provide information on each part of the proposed sample design.

7.2 SPECIFIC MEDIA SAMPLING

As needed, discrete samples of specific media will be collected from biased locations from those waste streams that have been identified as needing additional sampling/analytical data (Table 3-1) for final disposition. The laboratory data will be used to confirm contamination levels in each of the materials and to establish the engineering calculation and waste profile. This sampling and analysis process will occur prior to and during facility demolition.

Table 7-1 identifies the specific media sample design for all of the waste streams identified in this DQO process to resolve the DS for each waste stream. In some cases, existing data and process knowledge will be used to resolve the DS and provide adequate characterization information.

Table 7-1. Specific Media Sampling.

WS #	Waste Stream	Media	Sampling Methods	Analytical Requirements
1	Process vessels, equipment and piping in Cells A-F	Residual solids and surface contamination, potential for residual liquids	1. Visual observation of material consistency and geometry in tanks 2. Check piping for liquid via non intrusive methods or hot taps 3. If found, sample residual liquids 4. NDA and flange smear or sample residual material in tanks & centrifuges listed in Section 7.3	See Table 1-18

Table 7-1. Specific Media Sampling.

WS #	Waste Stream	Media	Sampling Methods	Analytical Requirements
2	Miscellaneous aqueous liquids	Aqueous liquid residuals identified in piping system pumps, sumps, tanks, piping, drains, and processing equipment	Non-intrusive liquid presence sampling using ultrasonic instruments, or hot taps into low spots or likely collection locations. See Section 7.7	See Table 1-18
3	Miscellaneous solids	Sediments and residuals identified in piping system pumps, sumps, tanks, piping, rains, and processing equipment	Sample as indicated in Section 7.3 and 7.7	See Table 1-18
4	Bulk demolition debris	Paint/coatings on exterior of materials if observed	Scraping paint; minimum of one representative sample from each type paint/coating	Cadmium, chromium, barium, lead, mercury, PCBs
		Bulk debris	Field screening for waste disposition as described in Section 7.4.2.	See Table 1-18
5	Asbestos-containing material	AHERA asbestos inspector will perform inspection	Samples will be obtained in accordance with simplified sampling scheme for friable surface materials (EPA, 1985)	Asbestos fibers
6	Incandescent light fixtures	Lead-base bulbs	No sampling required; see Table 3-1	N/A
7	Florescent light fixtures	Internal light ballasts	No sampling required; see Table 3-1	N/A
8	Lead packing in bell and spigot piping in galleries	Lead packing material	No sampling required; see Table 3-1	N/A
9	Lead shielding	Lead bricks, blankets used for shielding	No sampling required; see Table 3-1	N/A
10	Mercury Switches	Switchgears	No sampling required; see Table 3-1	N/A
11	Emergency light batteries	Battery constituents	No sampling required; see Table 3-1	N/A

Table 7-1. Specific Media Sampling.

WS #	Waste Stream	Media	Sampling Methods	Analytical Requirements
12	Exit signs and smoke detectors	Internal radioactive sources	No sampling required; see Table 3-1	N/A
13	Lubrication grease, oil, hydraulic oils (includes door actuators and transformer oil)	Nonaqueous liquids	One representative sample per container or batch of the same material from the same source	See Table 1-17 for isotopic requirements. PCBs, TOX, arsenic, barium, benzene, cadmium, chromium, lead, mercury.
14	HEPA Filters	Filter media	1. The isotopic breakdown developed for WS#4 will be assumed for the filter depositions. 2. Sample per Table 3-1, NDA may be done on a case-by-case basis to verify non-TRU prior to disposal.	See Table 1-18 for isotopic requirements.
15	Step Off Pad Soft Waste	PPE garments, rags, tape, plastic	No sampling required, analysis performed for other waste streams bounds this waste.	N/A
16	Contaminated Soil below slab and adjacent to building	Soil	Standard sampling/ compositing methods	See Table 1-18 for isotopic requirements. For chemical constituents same requirements see WS#1.

AHERA = *Asbestos Hazard Emergency Response Act of 1986*

7.3 NONDESTRUCTIVE ASSAY

The NDA equipment and techniques shall be quantitative and capable of addressing DS #1. The assay equipment shall be commercial systems, use proven technologies, and have verified and validated data analysis software for this application. Proposed techniques shall have been previously demonstrated for similar in situ actinide measurements.

The data requirements and the accuracy and precision information will be documented in a specific SAP prior to using this equipment. The subcontractor's quality control procedures must be compatible with specifications in the *Hanford Analytical Services Quality Assurance Requirements Document* (DOE-RL 1998) and must be followed in the field to ensure that reliable data are obtained.

Existing NDA data will be verified by performing NDA on selected tanks and vessels. The targeted tanks/vessels for confirmatory NDA are those with higher previous NDA values, or values which could not be accurately measured due to high background readings. In addition, the selected tanks/vessels represent the feed stream and first process steps, the final process steps, and the waste collection tank. The initial list of tanks/vessels includes:

- Tank A-3 and centrifuge A-2 representing the initial feed and first precipitation step
- Tank C-8 representing the waste collection steps
- Tank D-3 representing the second precipitation step, also the previously determined NDA value for the tank is unexpectedly high
- Tanks F-9, F-8, and centrifuges F-2 and G-1 representing the final process steps, also for tanks F-9 and F-8, the previously determined NDA values for the tanks are unexpectedly high

The interior of tanks/vessels will be visually inspected if possible, to supplement the NDA and provide information on the distribution and homogeneity of any residual materials. Smears and/or samples will be taken where possible to allow determination of isotopic distribution and material form. As described in Section 3, the use of the NDA, isotopic information and sample data will be used to correlate with dose readings through engineering calculations in a conservative manner to perform waste designation and determine equipment/piping inventory values.

7.4 RADIOLOGICAL SURVEYS

7.4.1 Routine Radiological Surveys

Routine radiological surveys will be conducted prior to any major equipment removal activities. The routine radiological surveys will consist of routine surveys of accessible surfaces of the waste media and will be conducted by project radiological control technicians (RCTs). Additional uniformly distributed and/or biased measurements may be collected at the discretion of the project radiological engineer or project characterization lead. Information obtained from the routine radiological surveys will be used to determine the extent of contamination in the facility and to support worker health and safety during D&D activities. These surveys will be conducted in accordance with the appropriate requirements, as specified in the SAP.

7.4.2 Percent Profile Verification Surveys

Prior to waste disposition, radiological surveys will be completed for all of the waste materials in the scope of this project. These surveys will involve environmental radiological surveys of the shipping containers and will be conducted by project RCTs under direction of the waste transportation specialist in accordance with the appropriate requirements, as specified in the SAP. The profile verification surveys will be used to determine and document the activity per volume (ρCi/g) of waste profile for the waste materials.

7.4.3 Material Release Surveys for Reuse

Salvageable materials that have no potential for volumetric contamination may be surveyed for release. The material release surveys will involve routine radiation surveys of accessible surfaces of the waste materials and will be conducted by project RCTs in accordance with appropriate procedures, as specified in the SAP.

Additional surveys for offsite release will be conducted as needed in accordance with appropriate property release requirements.

7.5 ANOMALOUS WASTE MATERIALS

Anomalous waste materials include any unplanned or unexpected material discovered during D&D operations that will require sampling and analysis to support disposition. The anomalous waste category is provided to allow field decision making based on "as-found" conditions discovered during demolition. Waste Management will support the final determination of the sample analysis that is required on a case-by-case basis. The project will evaluate appropriate historical information, process knowledge, and existing analytical data to determine if additional analytical information is needed to facilitate the appropriate disposal pathway. An interface with regulators will be required to obtain concurrence on additional required characterization/sampling to dispose of any materials outside the scope of this DQO.

7.6 CONTAMINATED SOIL SAMPLES

The intent of the samples of contaminated soil from outside the building structure is to provide information for planning activities leading to site remediation at a future date. Since the area of concern is associated with the potential for significant contamination in soils external to the building related to process activities in the facility, a soil sample will be obtained from the area near the sump in Cell C. All liquids in the other process cells that leaked or otherwise found their way to the cell floors were routed to the Cell C collection tank C-8, so there is a low probability that these solutions would have affected soil external to the building at other locations. The Cell C floor drained to a sump in the southeast corner of the deep pit, and that area is the most likely location for any standing liquid to have been incurred, and therefore the most likely for any long term leakage path leading to external soil contamination.

Therefore an access core hole will be bored through the concrete floor in or adjacent to the Cell C sump and a soil sample obtained external to the building structure. The approximate depth of the soil column sample will be 3' below the concrete.

An additional soil sample will be taken on the south side of the building, in the area identified as waste site UPR-200-E-87. Contamination was observed in the soil in this location in 1989 during surveillance activities, and a layer of clean gravel was placed over the area. This soil sample will provide a preliminary indication of the depth and levels of chemical and radionuclide contamination associated with the site. This sample depth will represent a 3' deep column of soil.

7.7 INSPECTION OF PIPING ENTERING/EXITING FACILITY

As the facility is demolished, points where process and service piping entered and exited the facility will be identified. Since the desired end point for this remedial action is a slab on grade condition, pipelines entering and exiting from below grade through the slab will be cut off and isolated or plugged. As this activity is performed, normal radiological surveys will be performed, and visual inspection of the pipelines will be done. If significant quantities of anomalous solids/liquids are seen in the pipelines near the cutoff points, and samples can be readily obtained, sampling will be performed to provide an indication of the properties of the residues in the pipes.

7.8 COORDINATION WITH INITIAL CELL ENTRIES

Several initial entries to the process cells are planned to provide early information on the radiological condition of the ventilation space and general area, and to vacuum and remove extensive dust and loose contamination known to exist in these areas. The data obtained from these entries is not intended to directly support the DQO/SAP requirements but may provide indications of specific areas that the focused samples should be taken in. The intent is to take samples to support waste designation under the

DQO/SAP requirements after initial cleanup is performed, and before significant fixatives are applied that could prevent representative smears or NDA assays from being obtained.

8.0 REFERENCES

10 CFR 61, "Licensing Requirements for Land Disposal of Radioactive Wastes," *Code of Federal Regulations*, as amended.

40 CFR 261, "Identification and Listing of Hazardous Waste," *Code of Federal Regulations*, as amended.

40 CFR 268, "Land Disposal Restrictions," *Code of Federal Regulations*, as amended.

40 CFR 761, "Polychlorinated Biphenyls (PCBs) Manufacturing, Processing, Distribution in Commerce, and Use Prohibitions," *Code of Federal Regulations*, as amended.

Asbestos Hazard Emergency Response Act of 1986, 20 U.S.C. 52, Sec. 4011, et seq.

BHI, 2001, 224-B Facility Documented Safety Analysis, BHI-01156, Revision 1, Bechtel Hanford, Inc. Richland, Washington

BHI, 2001, Safety Analysis for the Environmental Restoration Disposal Facility, BHI-00370, Rev. 6, Bechtel Hanford, Inc., Richland, Washington.

BHI, 2002, *Environmental Restoration Disposal Facility Waste Acceptance Criteria*, BHI-00139, Rev. 4, Bechtel Hanford, Inc., Richland, Washington.

Delorenzo, T. H., S. H. Finfrock, R. Khaleel, A. H. Lu, P. D. Rittmann, and M. I. Wood, 1995, *Environmental Restoration Disposal Facility Performance Assessment*, BHI-00169, Rev. 0, Bechtel Hanford, Inc., Richland, Washington.

DOE-RL, 1994, *Remedial Investigation and Feasibility Study Report for the Environmental Restoration Disposal Facility*, DOE/RL-93-99, Rev. 0, U.S. Department of Energy, Richland Operations Office, Richland, Washington.

DOE-RL, 1998, *Hanford Analytical Services Quality Assurance Requirements Document*, DOE/RL-96-68, Rev. 2, U.S. Department of Energy, Richland Operations Office, Richland, Washington.

DOE-RL, 2002, *Hanford Site Waste Management Units Report*, DOE/RL-88-30, Rev. 11, U.S. Department of Energy, Richland Operations Office, Richland, Washington.

DOE, 2003, *Engineering Evaluation/Cost Analysis for the 224-B Plutonium Concentration Facility*, DOE/RL-2000-06 Rev. 2, U.S. Department of Energy, Richland Operations Office, Richland, Washington.

EPA, 1983, *Methods for Chemical Analysis of Water and Wastes*, EPA 600/4-79-020, U.S. Environmental Protection Agency, Washington, D.C.

EPA, 1985, *Asbestos in Buildings: Simplified Sampling Scheme for Friable Surfacing Materials*, EPA 560/5-85-0309, U. S. Environmental Protection Agency, Washington, D.C.

EPA, 1997, *Test Methods for Evaluating Solid Waste: Physical/Chemical Methods*, SW-846, 3rd ed., as amended, U.S. Environmental Protection Agency, Washington, D.C.

FH, 2002, *Hanford Site Waste Acceptance Criteria*, HNF-EP-0065, Fluor Hanford, Inc., Richland, Washington.

FH, 2002a, *PHMC Radiological Control Manual*, HNF-5173, Revision 2, Fluor Hanford, Inc., Richland, Washington.

Resource Conservation and Recovery Act of 1976, 42 U.S.C. 6901, et seq.

Gould, J. I., 1985, Radiological Characterization of the 224B Hot Cells, SD-DD-TRP-002, Revision 0, Westinghouse Hanford Company, Richland Washington

Raile, M. N., 1953, *Final Report – Decontamination of 221-224 B Process Equipment*, HW-27774 (DECLASSIFIED), dated April 20, 1953

Speer, D. R., 1988, *Management Of Process Tanks And Lines In 224-B Building*, Letter No. 2240-88-049, D&D Engineering, D. R. Speer to L. A. Garner, March 22, 1988, Westinghouse Hanford Company, Richland Washington

GE, 1951, *Flowsheets for Precipitation Processes*, HW-23043