START

0009147

May 9, 1990

Meeting Minutes Transmittal/Approval
Unit Managers Meeting: 100-NR-1/NR-3 Operable Units
450 Hills Street, Room 47, Richland, WA
April 19, 1990

From/
Appvl. Paul M. Pak Date: 5/18/90
Paul M. Pak, 100-NR-~~1~~ 3 Unit Manager, DOE-RL (A6-95)

Appvl. K. Michael Thompson Date: 5/17/90
K. Michael Thompson, 100-NR-~~3~~ 1 Unit Manager, DOE-RL (A6-95)

Appvl.: Doug Sherwood Date: 5/17/90
Paul Day, 100-NR-1/NR-3 Unit Manager, EPA (A7-70)

Appvl.: verbal to Paul Pak Date 5/22/90
Larry Goldstein, 100-~~NR-1~~ NR 3 Unit Manager, WA Department of Ecology

Appvl. Charles S. Cline Date: 5/17/90
Charles S. Cline, ~~100-NR-3~~ 100.NR1 Unit Manager, WA Department of Ecology

Meeting Minutes are attached. Minutes are comprised of the following:
- Attachment #1 - Meeting Summary/Summary of Commitments and Agreements;
- Attachment #2 - Attendance List and;
- Attachment #3 - Viewgraphs used in ATK presentation

Prepared by: Dave Allen Date: 5/17/90
SWEC Support Services

Concurrence by: [illegible] Date: 5/17/90
WHC NR-1, RI Coordinator

RM for WE Gram Date: 5/17/90
WHC NR-3, RI Coordinator

JUN 1990
RECEIVED
EDMC

9011181075 7

Distribution:

Ward Staubitz, USGS
Donna Lacombe, PRC
Jerry Chiaramonte, SWEC/IT (A4-35)
Jack Waite, WHC (B2-35)
Bob Julian, WHC (H4-55)
Tom Wintczak, WHC (B2-15)
Mel Adams, WHC (H4-55)
Rick McCain, WHC (H4-55)
Roy Gephart, PNL (K6-97)
Brian Sprouse, WHC (H4-22)
Diane Clark, DOE-RL (A5-55)
Bill Price, WHC (S0-03)
Don Kane, Battelle EMO (K1-74)
Bill Green, WHC (H4-55)
Mike Gasser, SWEC (A4-35)

Ronald D. Izatt (A6-95)
Director, DOE-RL, ERD
Ronald E. Gerton
Director, DOE-RL, WMD

Roger D. Freeberg (A6-95)
Chief, Rstr. Br., DOE-RL/ERD
Steven H. Wisness
Tri-Party Agreement Proj. Mgr.
Richard D. Wojtasek (B2-15)
Prgm. Mgr. WHC

Jim Patterson, WHC
Doug Sherwood, EPA

ADMINISTRATIVE RECORD (100-NR-1, 100-NR-3) [Care of Susan Wray, WHC (H4-51C)]

9011181075 8

Attachment #1

Meeting Summary and Summary of Commitments and Agreements
100-NR-1/NR-3 Operable Units Managers Meeting
450 Hills Street, Room 47
April 19, 1990

1. This was an informal meeting of Westinghouse, DOE, EPA and Ecology managers to provide a briefing on the history of the subject Operable Units and a status of the Work Plans as they are being written. An overview was presented by Grover Buhr of A.T. Kearney, the WHC contractor preparing the plans. The current status of activities at 100-N Area indicates that some data should be collected at this time before all liquid discharges cease. The viewgraphs used in the ATK presentation are included as Attachment 3.

Action # 1NR1.1 **Immediate action toward installing water-level recorders on selected wells surrounding the 1324NA pond and 1325N trench should be taken. Robert Julian, ASAP**

2. Additional discussion of Work Plan progress will be held at the June 1990 Unit Managers meeting. This discussion will cover the contents of Work Plan chapters 1 - 4. No NR-1/NR-3 meetings are scheduled for May.

9011181075 9

Attachment #2

Attendance List
100-NR-1 Unit Managers Meeting
April 19, 1990

Name	Organization	100-NR-1 Responsibility	Phone
D. Einan	EPA		509-376-3883
C.S. Cline	WDOE	NR-3 Unit Mgr	206-438-7556
L. Goldstein	WDOE	NR-1 Unit Mgr	206-438-7018
J.D. Goodenough	DOE-RL		509-376-7087
R.D. Hildebrand	DOE-RL	Env. Oversight	509-376-7287
R. Pressentin	DOE-RL	Admin. Ass't	509-376-5983
R.K. Stewart	DOE-RL	RI Coordination	509-376-6192
K.M. Thompson	DOE-RL	NR-1 Unit Mgr	509-376-6421
D.A. Myers	SWEC/IT	GSSC for DOE/RL	509-376-0969
M.M. Gasser	SWEC	GSSC for DOE/RL	509-376-9830
W. Staubitz	USGS	EPA Consultant	206-593-6510
D. Lacombe	PRC	EPA Consultant	206-624-2692
R.G. Dieffenbacher	WHC	QA	509-376-8383
W.E. Green	WHC	NR-3 Coord.	509-376-6523
M. Hagood	WHC	Geosciences	509-376-9664
R.P. Henckel	WHC	Scoping	509-376-2091
R. Julian	WHC	NR-1 Coord.	509-376-2539
M. Lauterbach	WHC	EE&T Group	509-376-5257
J. Patterson	WHC	Env. Programs	509-376-0568
V. Rohay	WHC	Geosciences	509-376-5507
D.K. Tyler	WHC	100-N Geosciences Gp.	509-376-6523
B. Wright	GAI	WHC Consultant	206-883-0777
K.L. Pittman	GAI	WHC Consultant	206-883-0777
G. Buhr	ATK	Work Plan Prep.	415-598-9390
G. Starkebaum	ATK	Work Plan Prep.	303-572-6175
C. Eddy	CEA	Hydrogeology	206-485-5860

9011310760

Agenda
100-NR-1 and 100-NR-3 Tutorial
April 4, 1990
8:00 am - 9:00 am, 450 Hills Rm. 35

I. N-Reactor History (R.J. Julian)

II. Geology/Hydrology Overview (V.J. Rohay)

III. 100-NR-1 WIDS Sites (R.J. Julian)

IV. 100-NR-3 WIDS Sites (W.E. Green)

V. Operable Unit Strategy Overview (M.C. Hagood)

9011181076

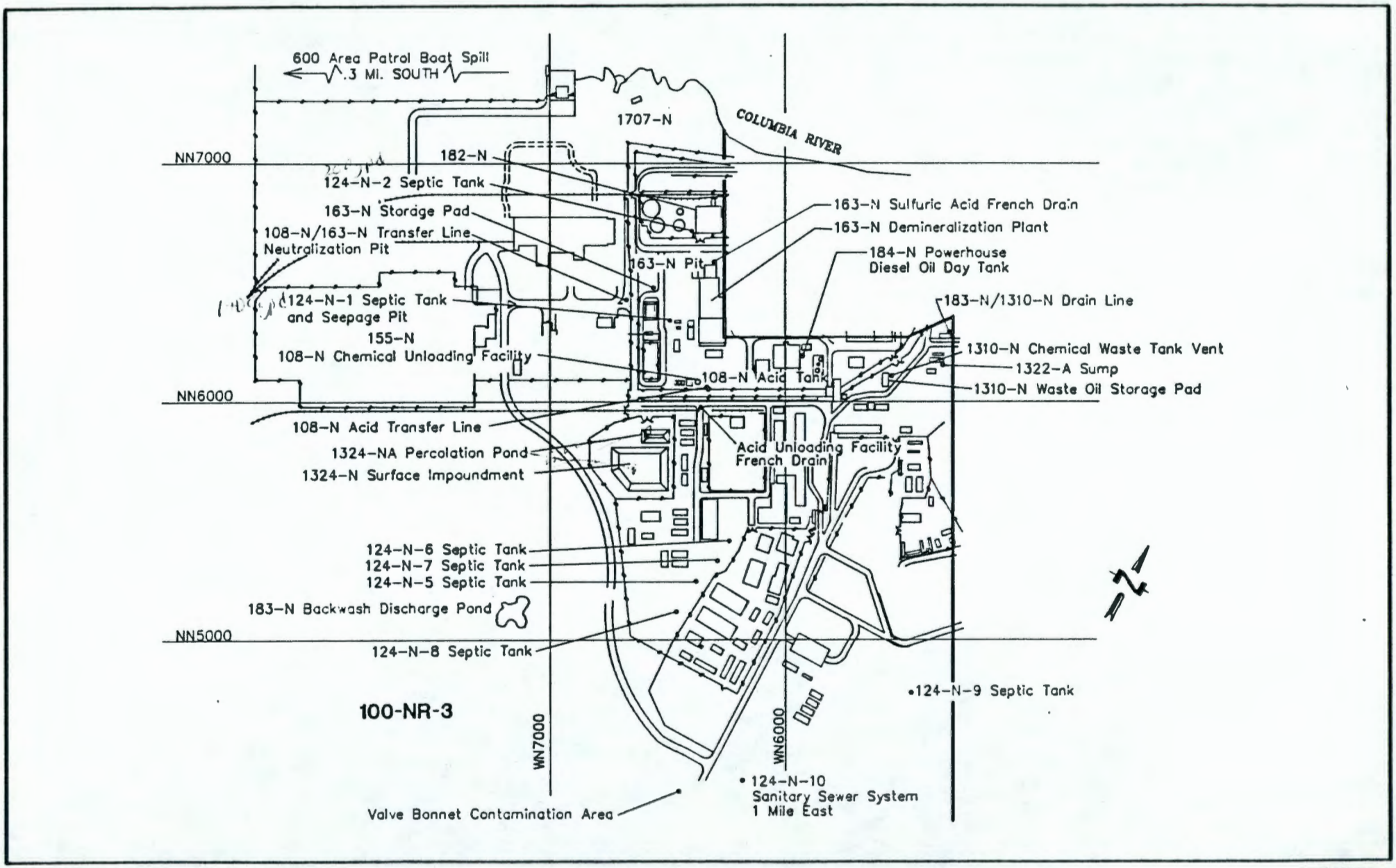
600 Area Patrol Boat Spill
.3 MI. SOUTH
1707-N
COLUMBIA RIVER
NN7000
182-N
124-N-2 Septic Tank
163-N Storage Pad
108-N/163-N Transfer Line
Neutralization Pit
163-N Pit
163-N Sulfuric Acid French Drain
163-N Demineralization Plant
184-N Powerhouse
Diesel Oil Day Tank
124-N-1 Septic Tank
and Seepage Pit
183-N/1310-N Drain Line
155-N
108-N Chemical Unloading Facility
1310-N Chemical Waste Tank Vent
1322-A Sump
108-N Acid Tank
1310-N Waste Oil Storage Pad
NN6000
108-N Acid Transfer Line
1324-NA Percolation Pond
1324-N Surface Impoundment
Acid Unloading Facility
French Drain
124-N-6 Septic Tank
124-N-7 Septic Tank
124-N-5 Septic Tank
183-N Backwash Discharge Pond
NN5000
124-N-8 Septic Tank
124-N-9 Septic Tank
100-NR-3
WN7000
WN6000
124-N-10
Sanitary Sewer System
1 Mile East
Valve Bonnet Contamination Area
N

WEG\030790-A

9 0 1 1 8 8 1 0 7 6 3

Preliminary Site Model

100-NR-1 and 100-NR-3 Operable Units

Presented to:

Washington Department of Ecology
U.S. Environmental Protection Agency
U.S. Department of Energy

A.T. Kearney, for
Westinghouse Hanford Company

April 19, 1990

Attachment #3

Briefing Structure

Project Description and Organization

100-N Area Description
- Operational Setting
  - History
  - Waste Generation and Disposal
- Physical Setting
  - Subsurface
  - Surface

Known and Suspected Contamination
- Sources
- Subsurface
- Surface
- Biological

Project Strategies

100-N Location

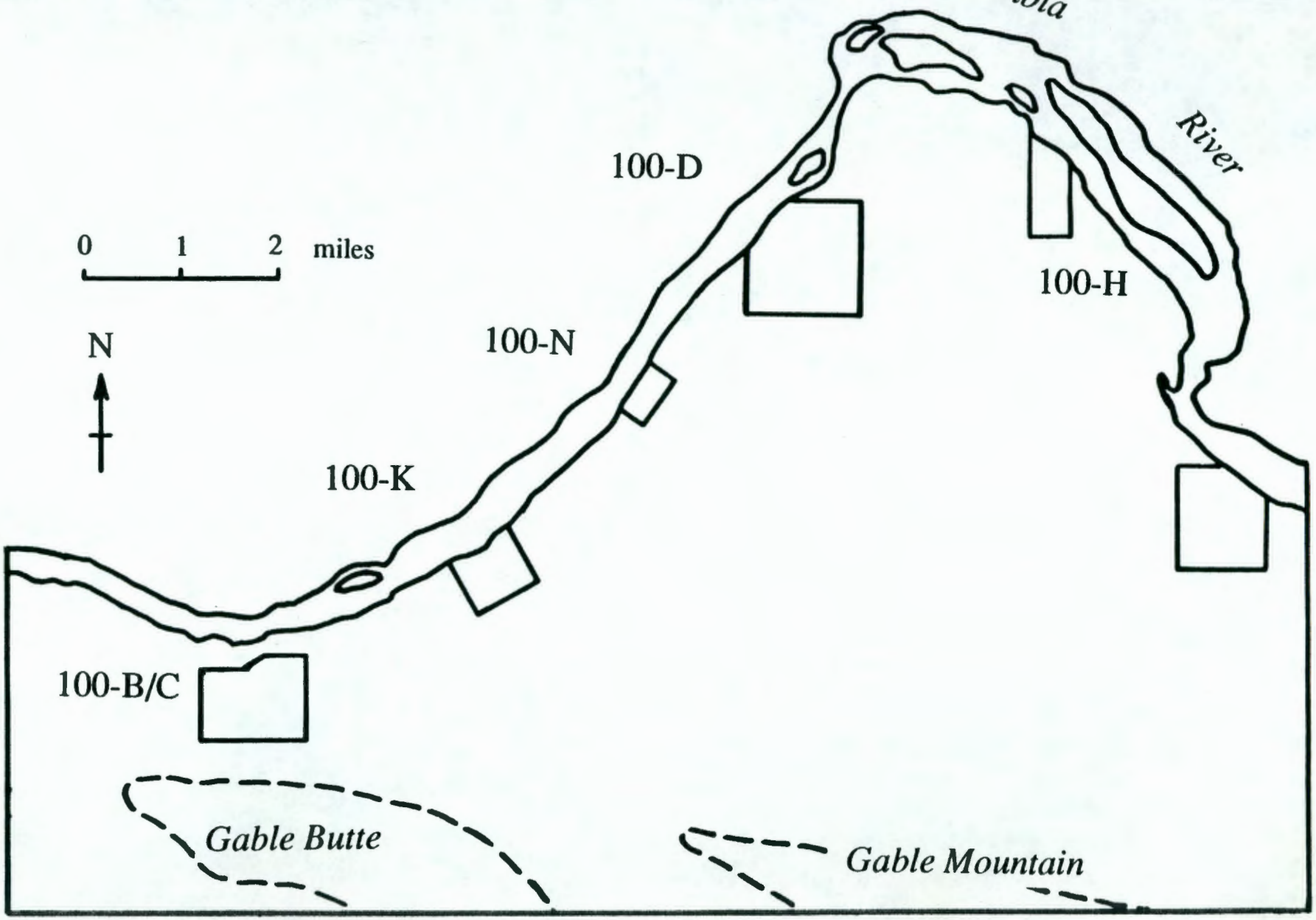

100-N Operable Units

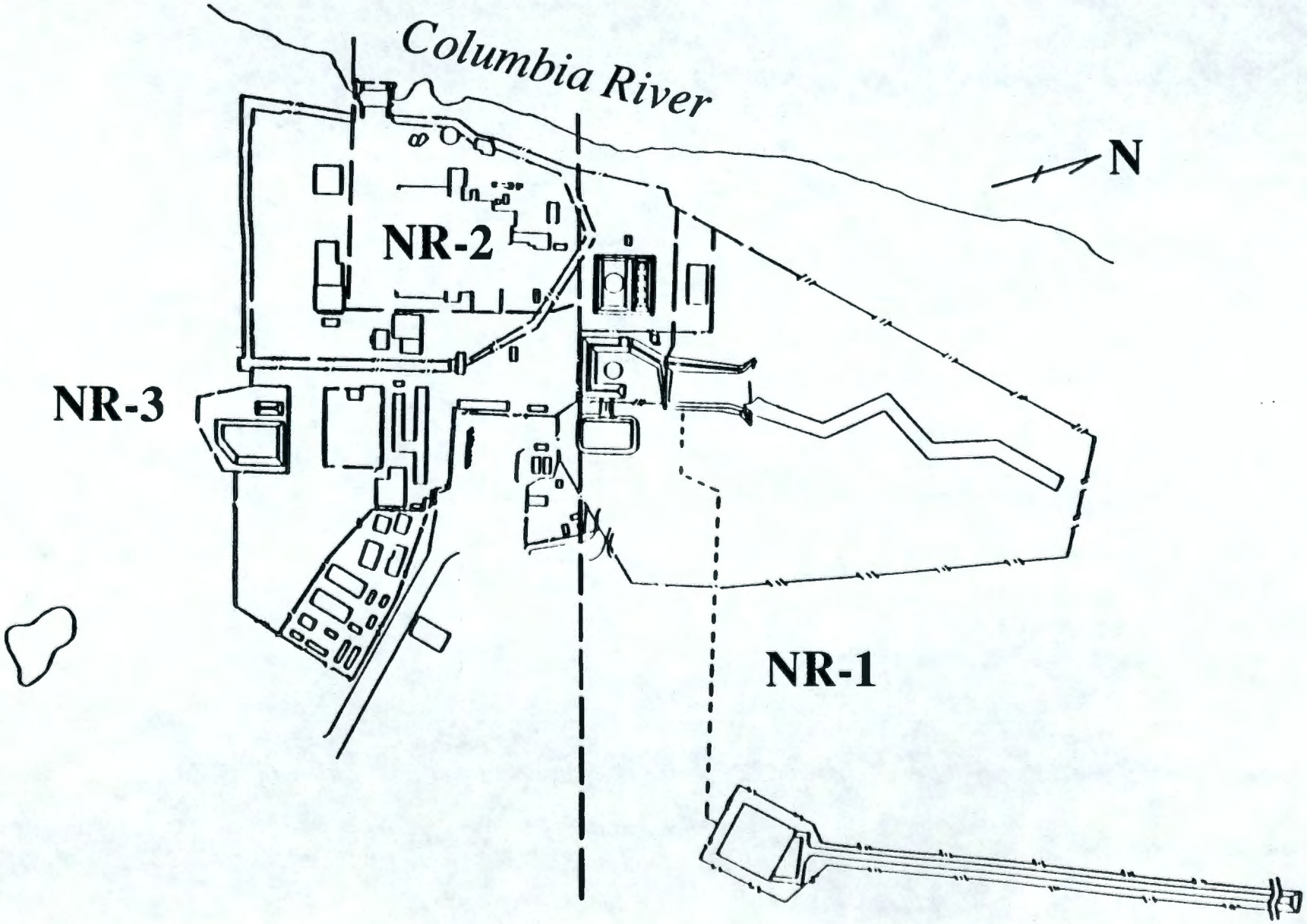

WHC-h

Work Plan Emphases

100-NR-1

Characterization of NR-1 source units

Characterization of groundwater, springs and river for 100-N area including effects of NR-2 and NR-3 source units

100-NR-3

Characterization of NR-3 source units exclusive of effect on groundwater and surface water

Time Line of Events for N Reactor

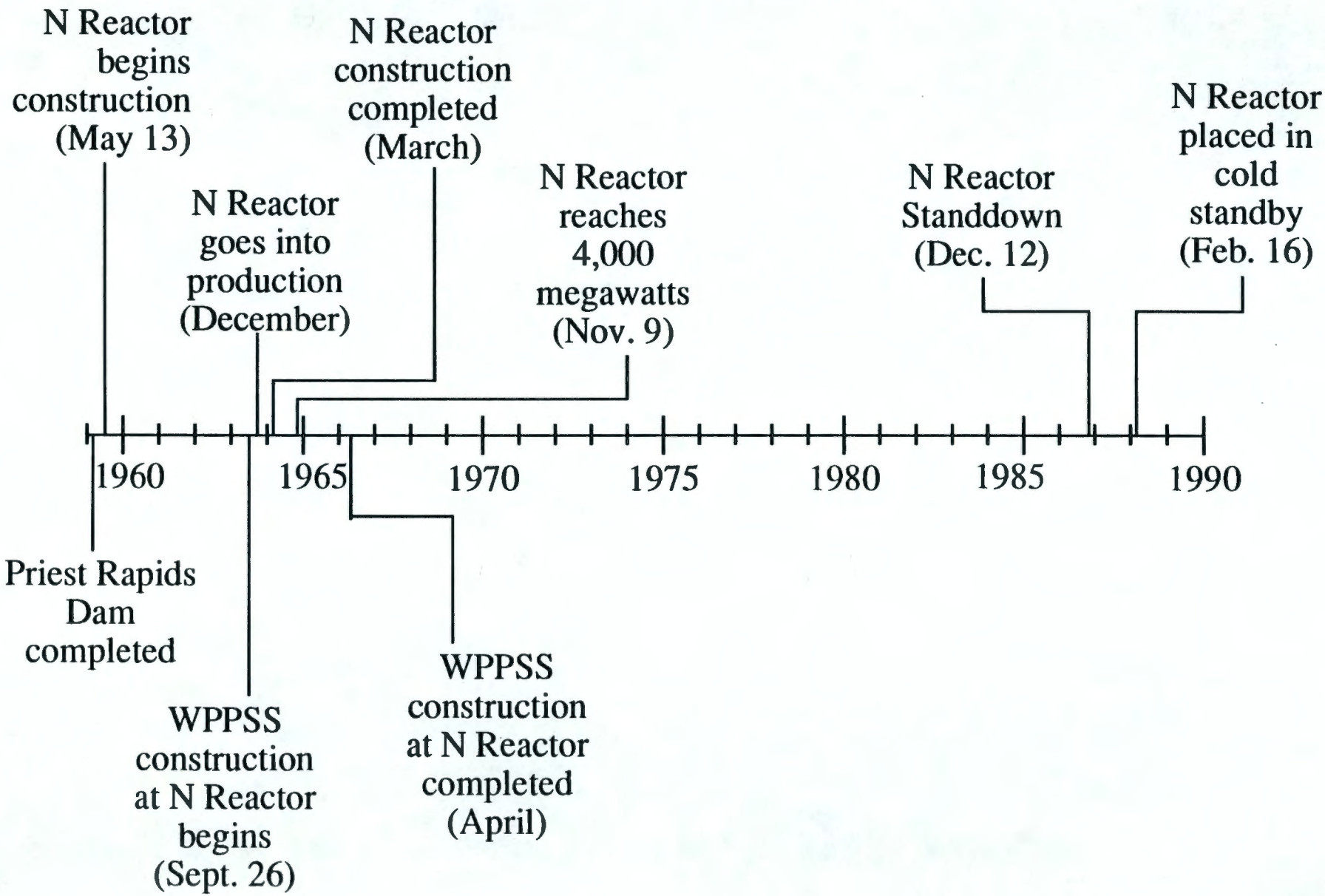

Flow Diagram for Major 100-N Waste Streams

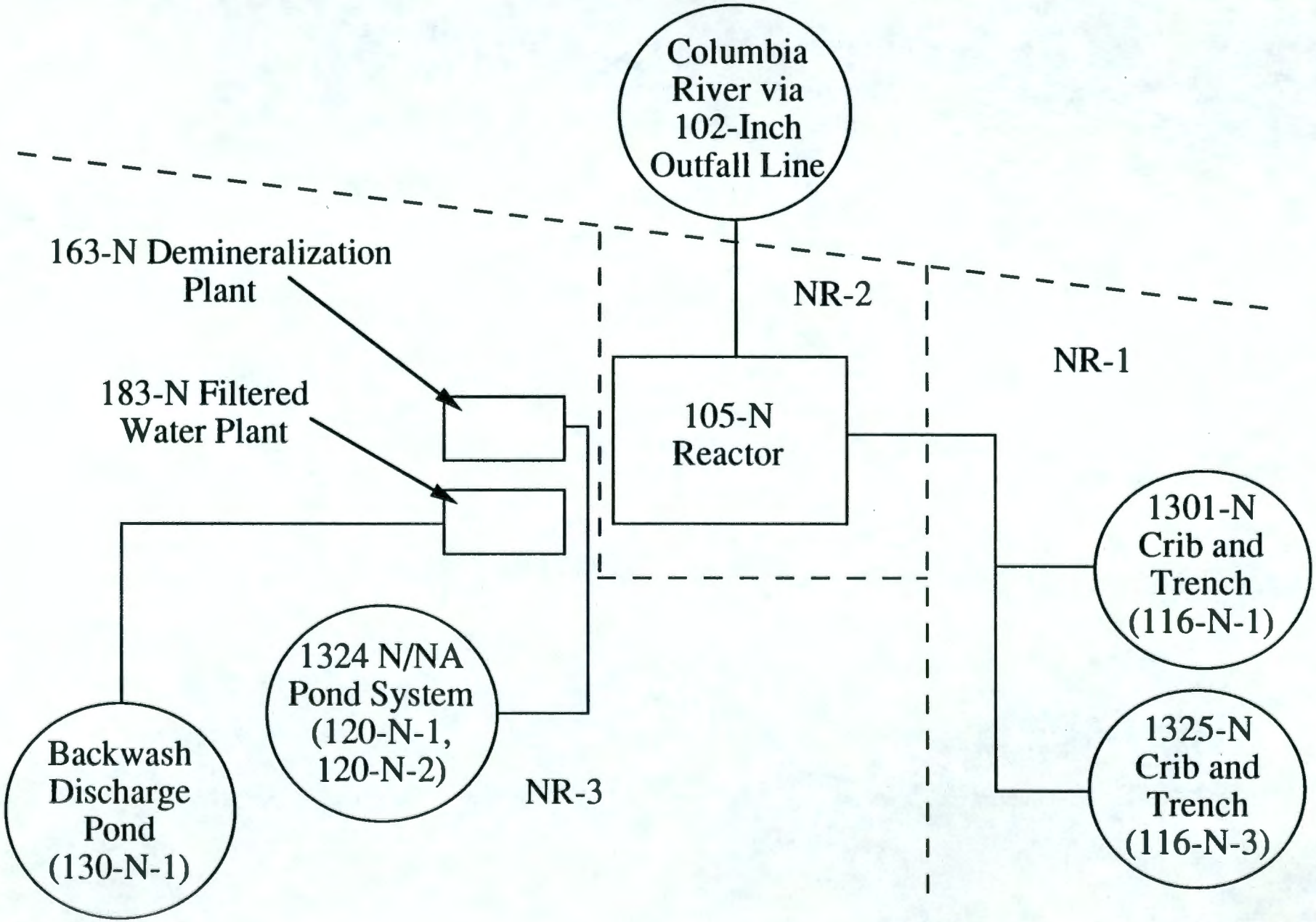

Major 100-N Potential Contaminants

Radioactive	Non-Radioactive
^{60}Co	Aluminum hydroxide
^{90}Sr	Aluminum sulfate
^{106}Ru	Chlorine
^{134}Cs	Fluoride
^{137}Cs	Hydrazine
$^{239/240}Pu$	Lead acetate battery fluids
^{3}H	Nickel-cadmium battery fluids
	Polyacrylamide
	Sodium dichromate
	Sodium hydroxide
	Sodium sulfate
	Sulfuric acid

Topography

100-N on bluffs overlooking river

- 100-N elevation ~ 450 feet
- River water elevation ~ 380 - 390 feet
- River bed elevation ~ 340 - 350 feet

Site topography extensively modified

- Surrounded by disorganized glacial kettle and kame topography

Conceptual Geologic and Hydrostratigraphic Column at 100-N Area

Based on
Well 699-86-60
(Abandoned 4/87)

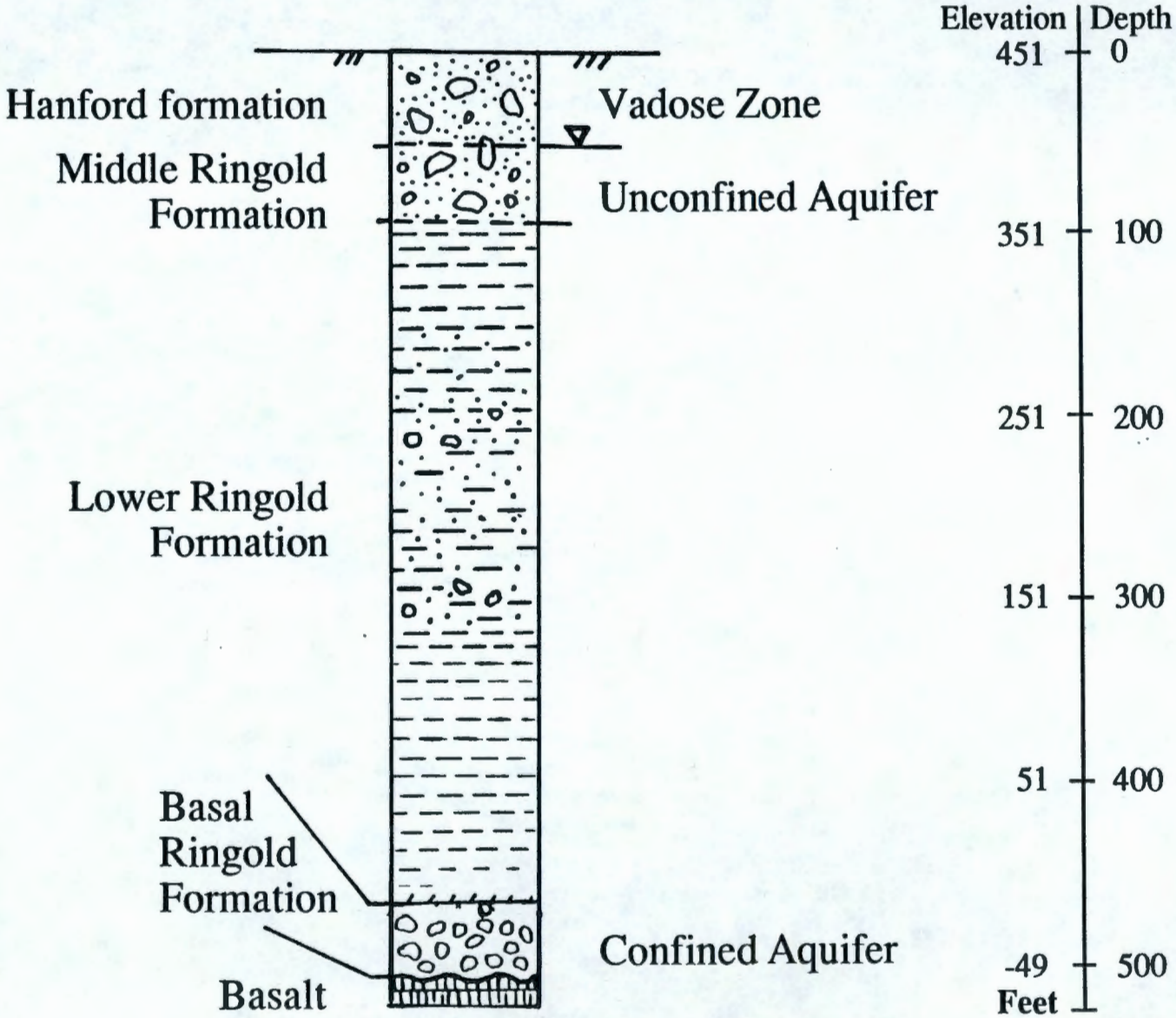

Water Levels in the Horn Area

December 1988
From Evans & others, 1989

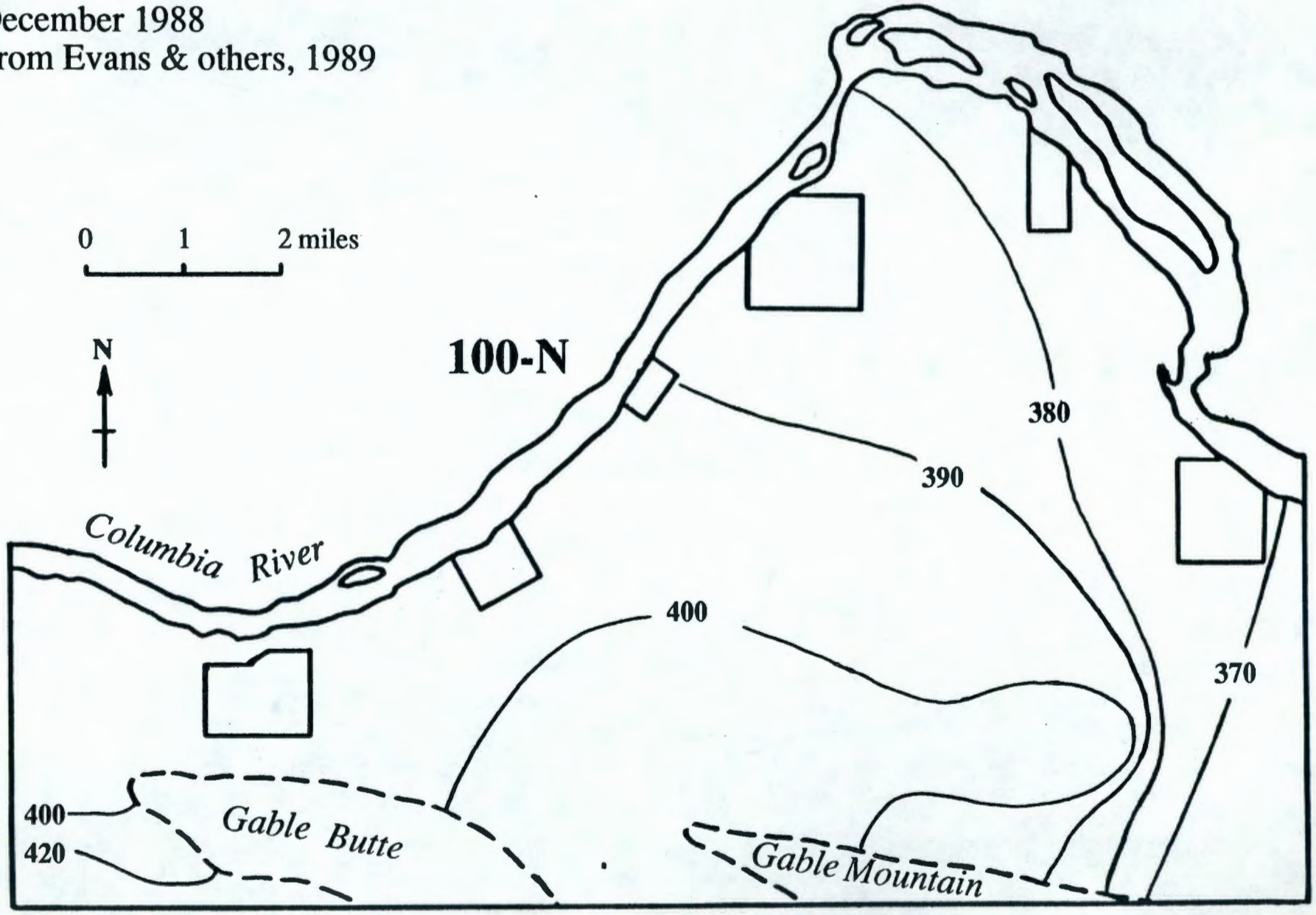

WHC-h

Water Table, June 1988

Reproduced from Gilmore (1989)

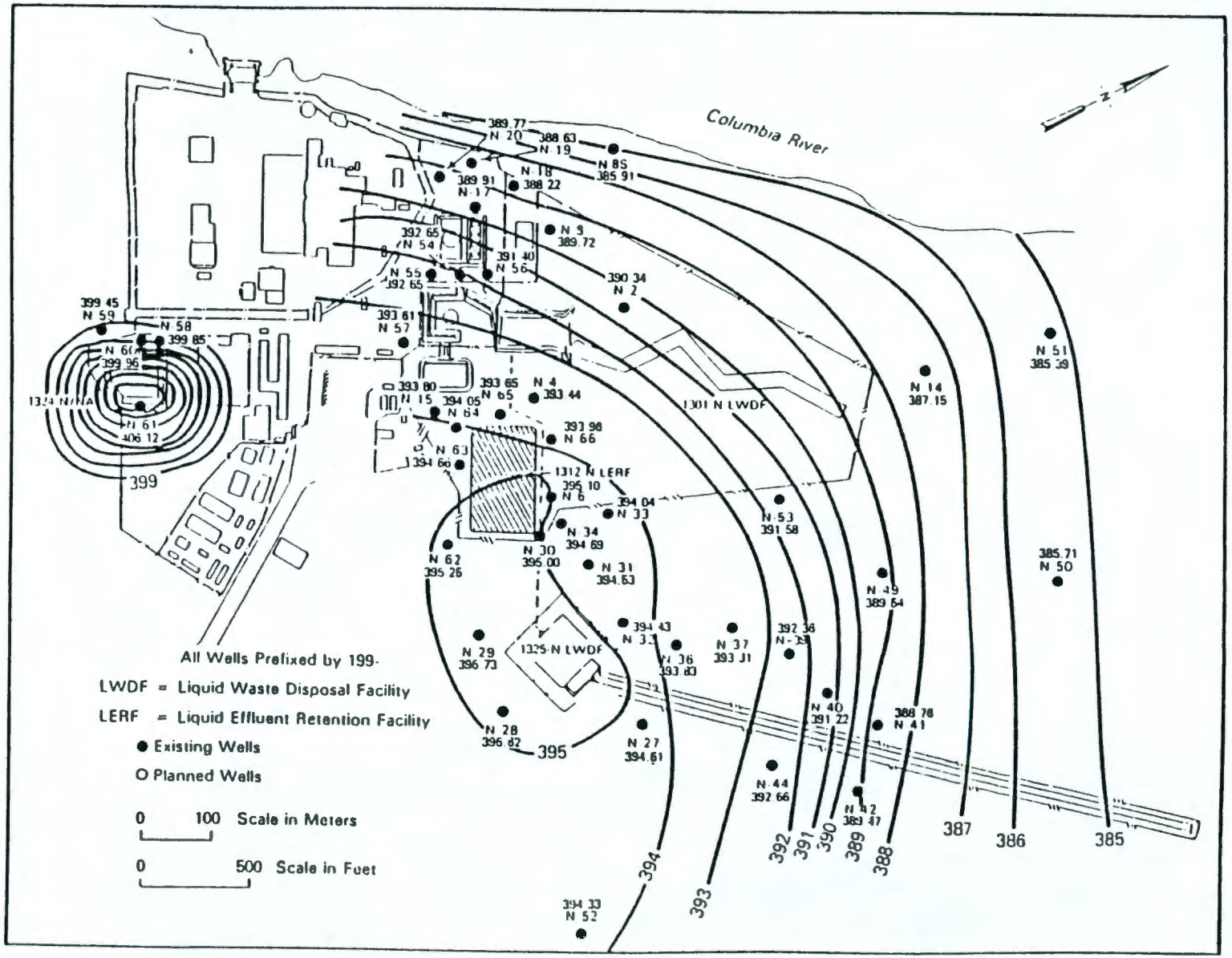

Ecological Characteristics

- Semiarid, moderate climate faunal assemblage
- Sagebrush/cheatgrass/bluegrass vegetation community
- Columbia River - Cool freshwater fish habitat
- Threatened and Endangered Species Potentially at 100-N:

Plants -	1 Endangered
	3 Threatened
Birds -	2 Endangered
	6 Threatened
Mammals -	1 Threatened

Population of Counties in Hanford Region, 1980 Census

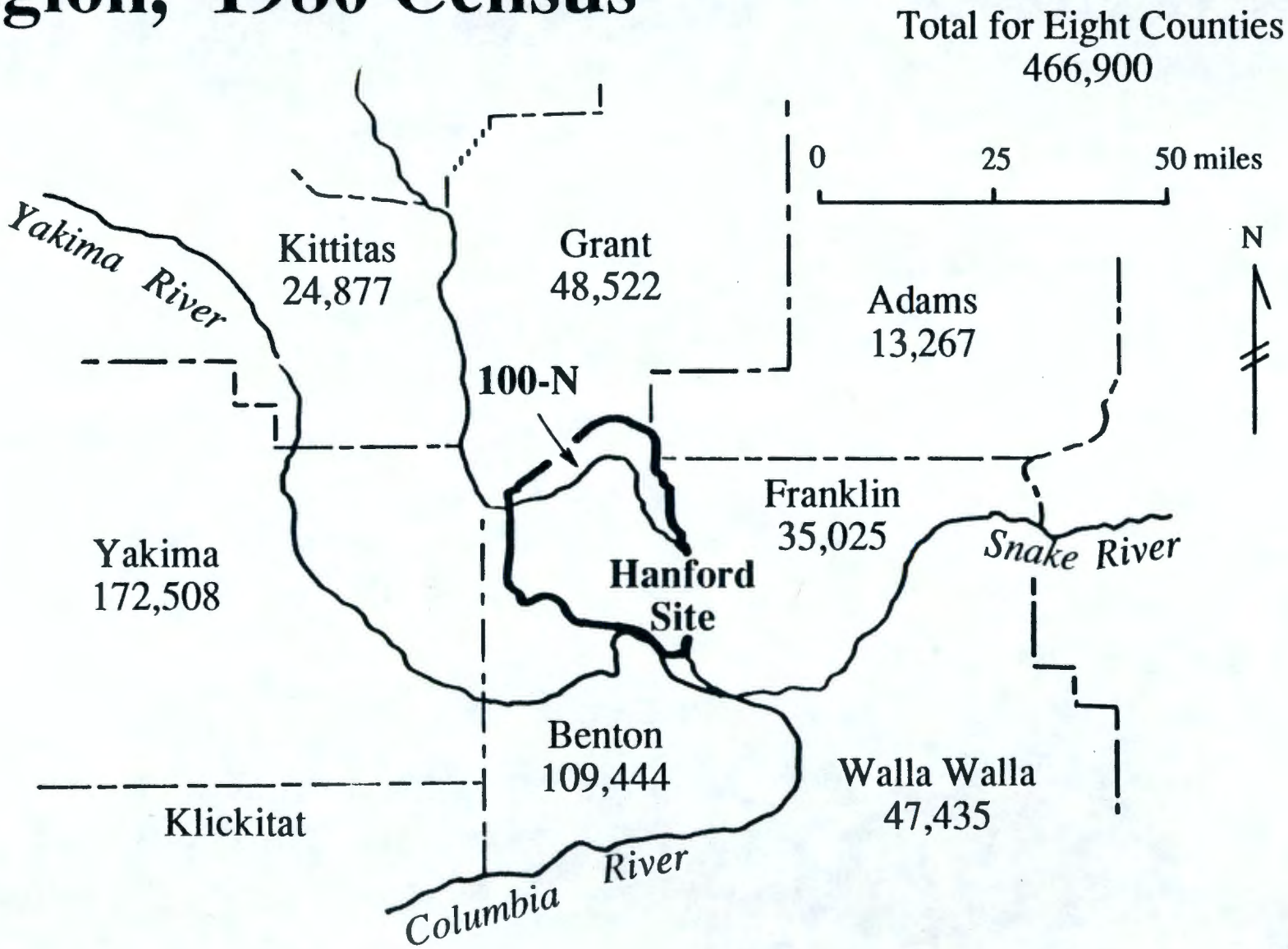

Source Units at 100-N Area

Columbia River

NR-2

Source Units:

3 Waste Management Units

10 Unplanned Releases

NR-3

Source Units:

18 Waste Management Units

15 Unplanned Releases

NR-1

Source Units:

5 Waste Management Units

8 Unplanned Releases

Source Units at 100-NR-1 Operable Unit

116-N-1	1301-N Crib and Trench
116-N-2	1310-N Storage Tank
116-N-3	1325-N Crib and Trench
124-N-4	Septic Tank and Drainfield
128-N-4	Burning Pit

8 Unplanned Releases

Source Units at 100-NR-3 Operable Unit

120-N-1	1324-NA Percolation Pond
120-N-2	1324-N Surface Impoundment
120-N-5	Neutralization Unit
124-N-10	Sewer
130-N-1	Filter Backwash Discharge Pond
116-N-8	163-N Mixed Waste Container Storage Area
120-N-4	Staging Area

4 French Drains (120-N-3, N-6, N-7, N-8)
7 Septic Tanks

15 Unplanned Releases

Major Source Units at NR-1 and NR-3

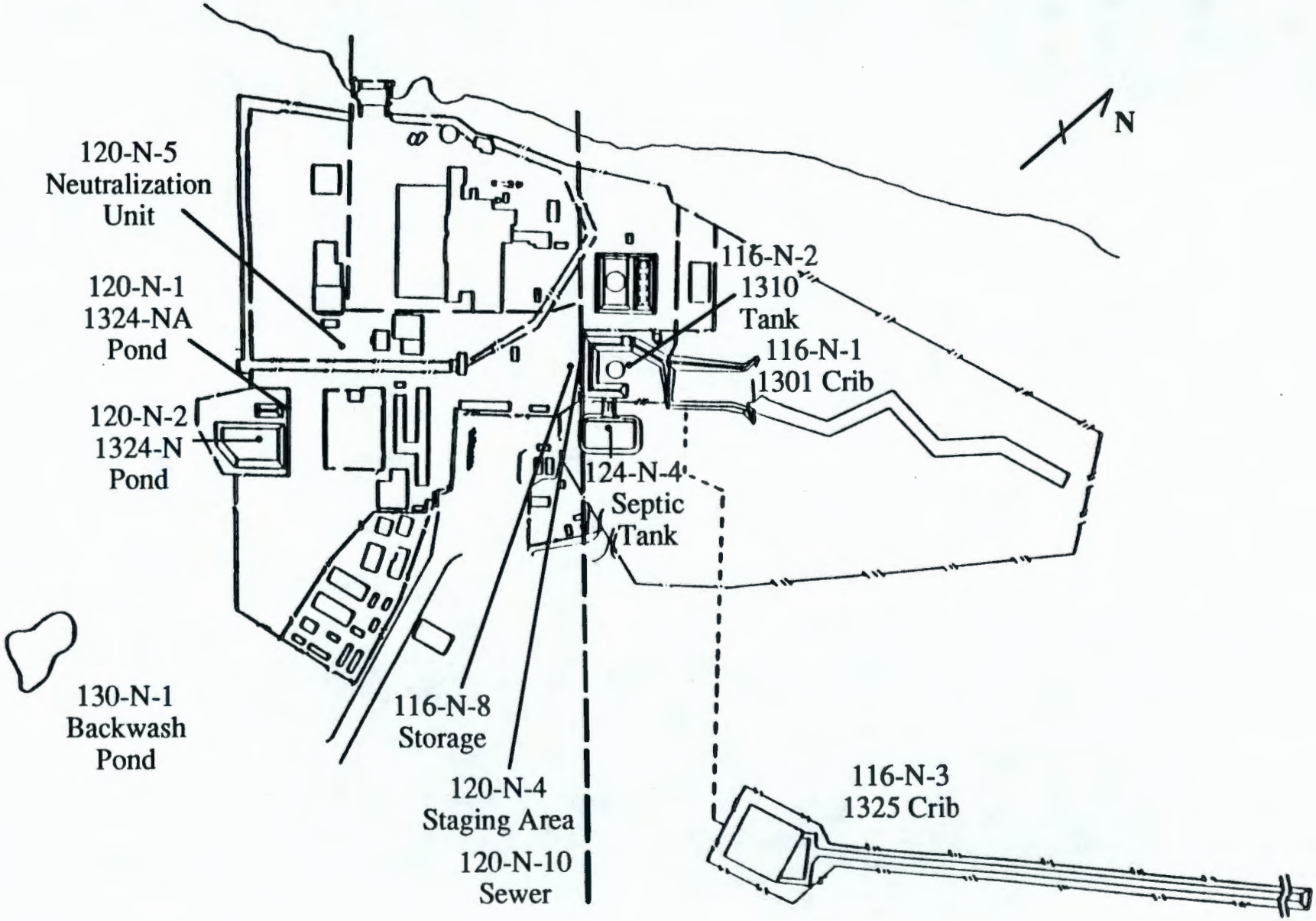

Tritium Levels in Groundwater, 1988

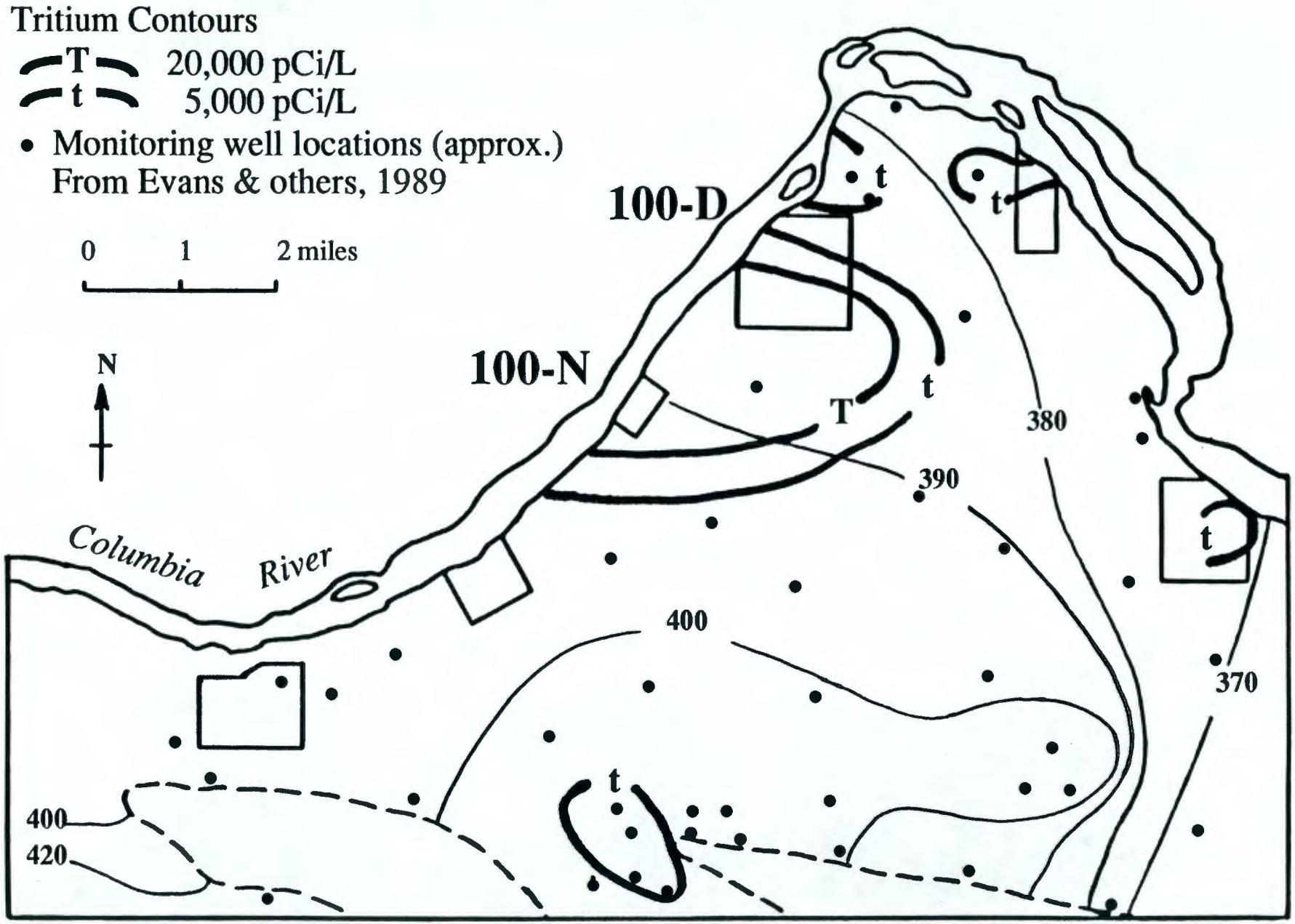

WHC-h

Sulfate and Strontium Plumes, 1989

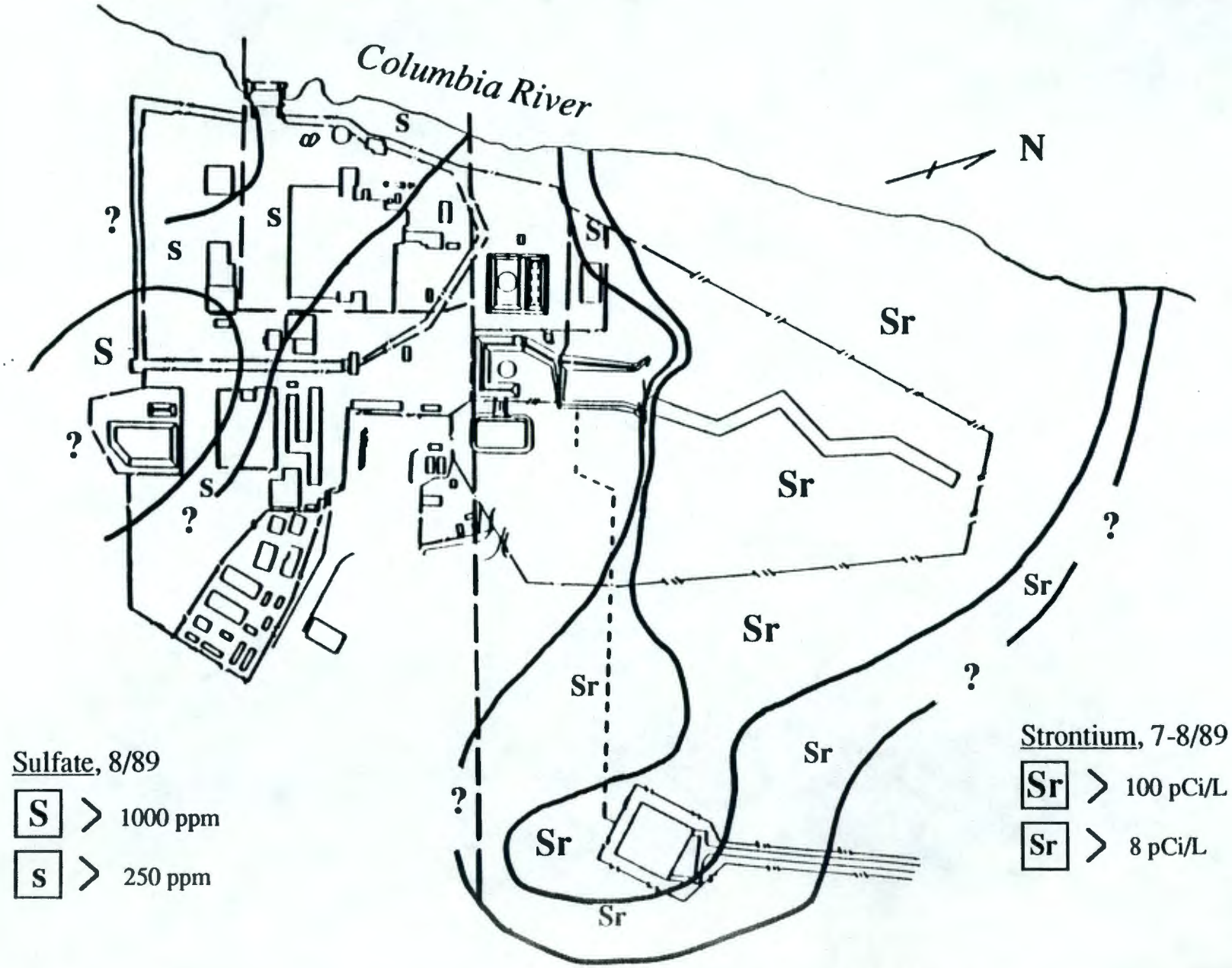

Surface Water

Springs

- Direct discharge of groundwater to river
- N Springs: Elevated Gamma, H-3, Sr-90

River Water

Received radionuclides and hazardous chemicals from direct discharge and via groundwater

River Sediments

Samples downstream of 100-D show elevated levels of Co-60, Cs-173, Eu-152

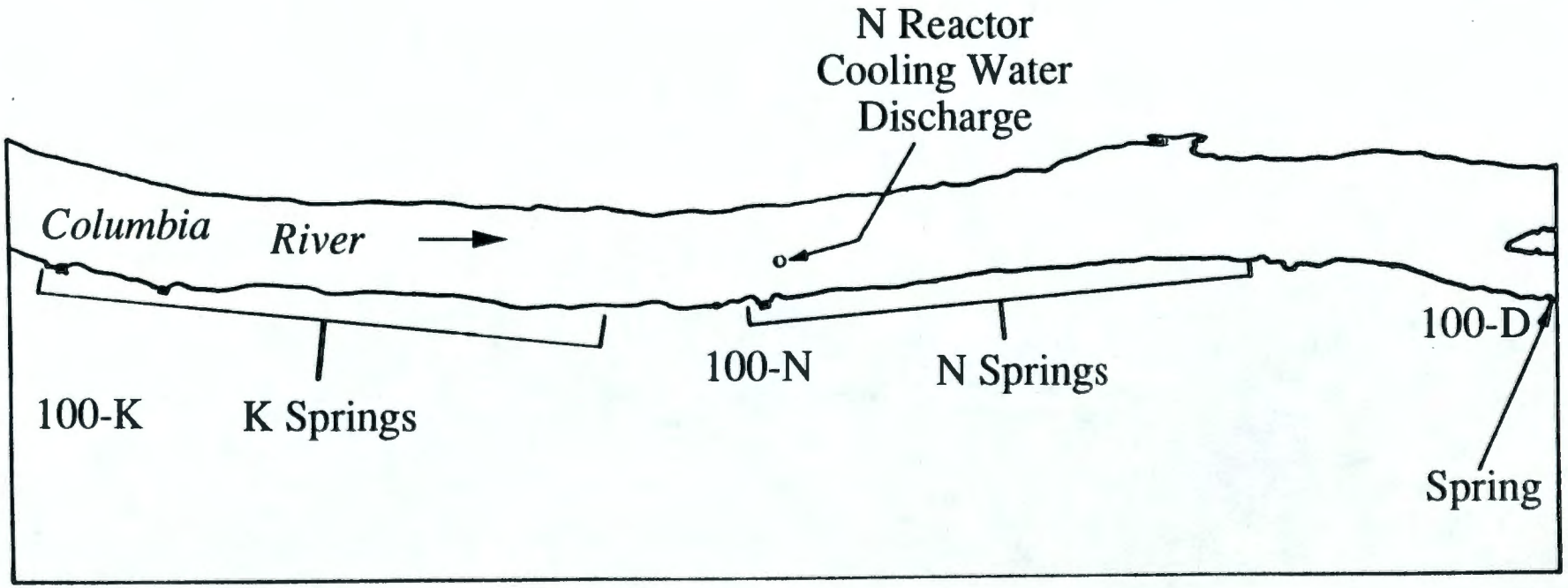

Soil Contamination

Potential Sources of Contamination

Liquid waste
Solid waste
Unplanned releases

Control on Mobility

Natural recharge
Artificial recharge
River fluctuations

Potential Contaminants

Radionuclides
Hazardous wastes

Air Pathway

Investigate whether past releases occurred which may have deposited radionuclides on soils

Coordinate with dose reconstruction project

Future releases based on remediation activities

- Release of soil particles during excavation
- Volatilization during excavation

Biotic Sampling in 100-N Area

Radionuclides detected in:

- Bird nests and eggs
- Wasp nests
- Rabbits
- Deer Mice
- Scat
- Riparian vegetation

Work Plan Goals

- Phase I - Sufficient characterization to:
  - Determine if any unit poses imminent and substantial endangerment, triggering interim action
  - Conduct short-term risk assessment
  - Define scope of Phase II
- Phase II - Sufficient characterization to:
  - Conduct long-term risk assessment
  - Design long-term remediation (if needed)

100-N Issues

- Location and prioritization of source units
- Potential for subsurface migration from 100-K and 200 areas
- Potential for migration of contaminants away from 100-N
- Relationship of mixed and hazardous wastes in subsurface
- Relationship of river with groundwater as mounds dissipate