PAGE START 0035787

Rockwell Hanford Operations

SUPPORTING DOCUMENT	Number	Rev. Ltr./ Chg. No.	Page 1 of Total Pages
PROGRAM: Health Safety and Environment	SD- HS-SAR-001	Rev 4	1333

Document Title:

PUREX Plant Final Safety Analysis Report

Baseline Document ☐ Yes ☒ No

WBS No. or Work Package No.

KP29N

Key Words:

PUREX, Final Safety Analysis Report

Prepared by (Name and Dept. No.)

Judith M. Siemer

J. M. Siemer 12723

Date 2/18/86

See reverse side for additional approvals

THIS DOCUMENT IS FOR USE IN PERFORMANCE OF WORK UNDER CONTRACTS WITH THE U.S. DEPARTMENT OF ENERGY BY PERSONS OR FOR PURPOSES WITHIN THE SCOPE OF THESE CONTRACTS. DISSEMINATION OF ITS CONTENTS FOR ANY OTHER USE OR PURPOSE IS EXPRESSLY FORBIDDEN.

Abstract

This Final Safety Analysis Report (FSAR) addresses health, safety, and environment protection matters pertaining to the operation of the PUREX Plant located in the U.S. Department of Energy Hanford Site.

This document fulfills the requirements of DOE Order 5480.1A, Chapter V.

A Preliminary Hazards Analysis is presented. These hazards were reviewed by personnel experienced in the operations of the PUREX Plant. Comparison of the predicted accident consequences with established criteria result in the judgement that PUREX Plant operations may be conducted with an acceptable level of risk.

NOT FOR PUBLIC DISSEMINATION

MAY CONTAIN UNCLASSIFIED CONTROLLED NUCLEAR INFORMATION SUBJECT TO SECTION 148 OF THE ATOMIC ENERGY ACT OF 1954, AS AMENDED (42 USC 2168). APPROVAL BY THE DEPARTMENT OF ENERGY PRIOR TO RELEASE IS REQUIRED.

THIS IS A PAGE CHANGE DOCUMENT AND SHALL BE INCORPORATED/ATTACHED TO THE FRONT OF THE LATEST COMPLETE RELEASED DOCUMENT.

*	Distribution	Name	Mail Address
	DOE-RL		
*		R. E. Gerton	Fed/700
*		D. P. Simonson	Fed/700
*		D. M. Smith	Fed/700
	PNL		
*		S. M. Gilchrist	RTL/300
	Rockwell		
		J. E. Albaugh	2750E/200E
*		D. K. Bailey	MO-405/200E
		D. C. Bartholomew	2750E/200E
*		R. C. Beagley	222-T/200W
		G. F. Boothe	2751E/200E
*		C. E. Brown	2751E/200E
*		R. C. Brown	MO-904/300
		F. P. Calapristi Sr.	2704S/200W
*		G. M. Christensen	2750E/200E
*		A. C. Crawford	2750E/200E
		P. Dessaules	2750E/200E
*		C. V. DiPol	2750E/200E
*		G. T. Dukelow	2750E/200E
*		J. F. Durnil	234-5/200W
*		J. H. Ellis	202-A/200E
		R. D. Fox	202-A/200E
*		D. G. Harlow	202-A/200E
*		D. C. Hendengren	MO-405/200E
*		R. A. Hultgren	271-B/200E
*		E. J. Kosiancic	2750E/200E
*		R. A. Kulick	MO-405/200E

(Continued on reverse side)

*COMPLETE DOCUMENT (No asterisk, title page/summary of revision page only)

Release Stamp

APR 1994 RECEIVED EDMC

Prepared By:

Used by

OFFICIALLY RELEASED

MAR 6 9 21 AM '86

APPROVED FOR PUBLIC RELEASE

NOT APPROVED FOR PUBLIC RELEASE

START

Rockwell Hanford Operations

Page	Number
2	SD– HS-SAR-001

SUPPORTING DOCUMENT

Approvals

- ☐ Program Office
- ☐ Research and Engineering
- ☐ Plant Operations
- ☐ Safety (of Safety and Quality Assurance)
- ☐ Quality Assurance (of Safety and Quality Assurance)
- ☐ Training
- ☐ End Function
- ☐ End Function
- ☐ Safety and Quality Assurance, Director
- ☐ Plant Operations, Director
- ☐ Chemical Processing Safety Committee and Approval Authority
- ☐
- ☒ 2/20/86 Approval Authority

*	Distribution Name	Mail Address
	P. G. Lorenzini	2750E/200E
	R. Y. Lyon	2751E/200E
	C. W. Manry	2704S/200E
*	W. E. Matheison	2751E/200E
*	J. D. McIntosh	202-A/200E
	J. K. McClusky	MO-405/200E
*	F. D. Nankini	MO-904/300
	S. M. Nielson	2751E/200E
*	G. C. Owens	2751E/200E
*	J. W. Patterson	2750E/200E
*	K. E. Plummer	MO-405/200E
*	P. D. Rittman	622G/600
*	D. E. Robbins	2750E/200E
*	J. H. Roecker	2750E/200E
*	B. J. Saueressig	2751E/200E
*	J. M. Siemer	2751E/200E
*	J. S. Sprouse	2101M/200E
*	G. C. Strickland	2751E/200E
*	R. W. Szempruch	2751E/200E
*	D. L. Uebelacker	202-A/200E
*	R. E. VanDerCook	202-A/200E
	E. C. Vogt	2751E/200E
*	S. A. Wiegman	2751E/200E
*	R. L. Walser	202-A/200E
*	Safety Analysis Files (2)	
	S. D. Kramer	2751E/200E
*	Technical Publications (2)	
	J. E. Brown	2751E/200E
*	G. L. Jones	2751E/200E

Summary of Revision

Complete Revision ____ **Page Change** ✓

DESCRIPTION OF CHANGE

Chapters 1, 4, 5, and 6 were revised to include a discussion of neptunium recovery and storage in J Cell. No changes were made to the Operational Safety Requirements.

These changes did not significantly affect the overall conclusions of the document.

RECEIVED EDMC APR 1994

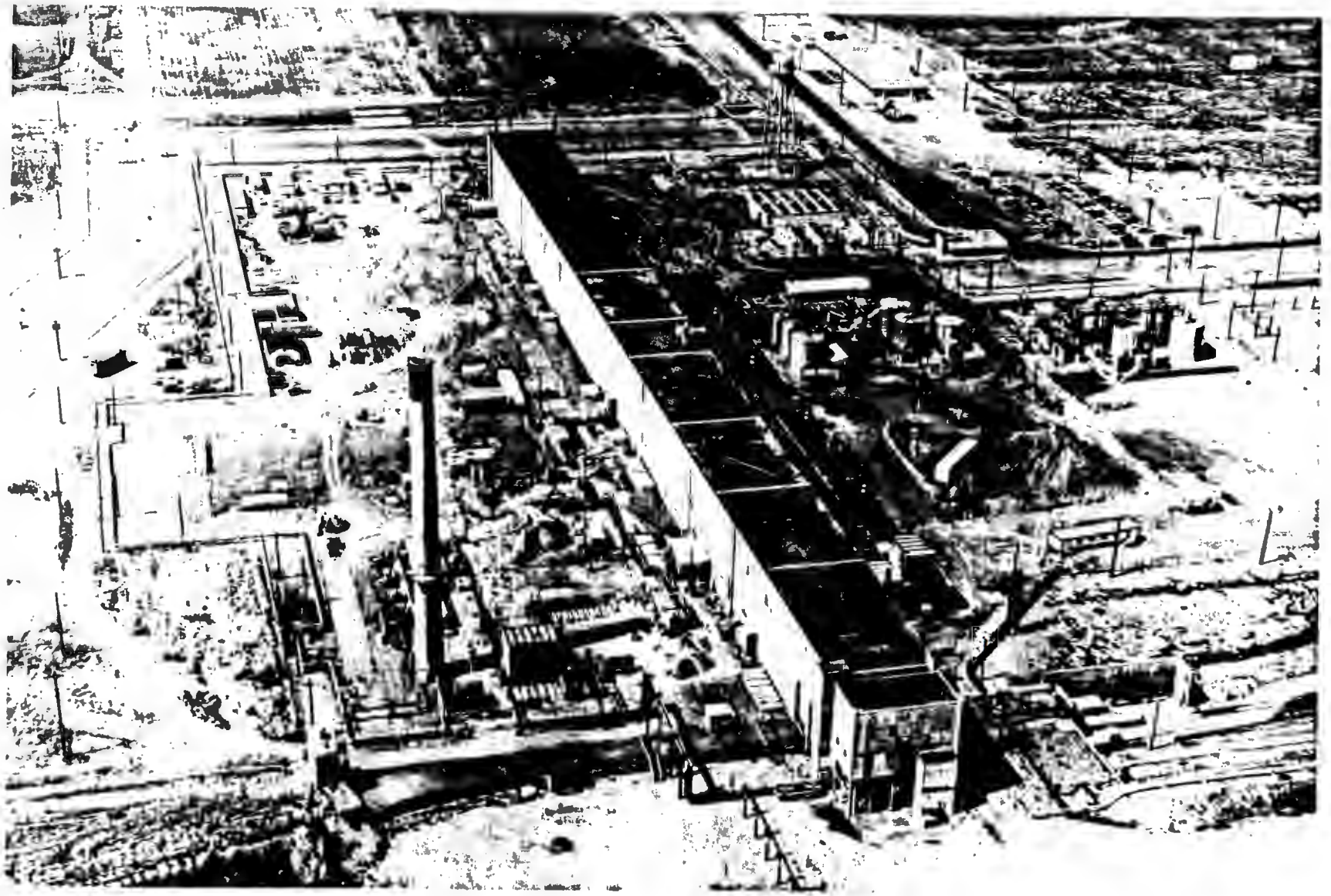

FIGURE 1-2. PUREX Plant--200 East Area.

THIS PAGE INTENTIONALLY
LEFT BLANK

Shutdown in 1972 was the result of the closure of eight of the nine production reactors at Hanford. Between shutdown and 1978, the plant was maintained in a "wet standby" condition. Major plant equipment, such as extraction columns and associated tankage, was periodically flushed with a dilute nitric acid solution. Pumps, column pulsers, jets, and other mechanical equipment were operated on a regular basis. Failed equipment was either upgraded or replaced, or the failures were formally documented for replacement. From 1978 to 1983, a program consisting of operability, readiness, and cold startup tests was in progress at PUREX to establish the plant's readiness to reprocess fuels in anticipation of restart. The PUREX Plant was started in November 1983 and has been operating to date on the recovery of plutonium from irradiated uranium fuel.

1.1.2 Fuels to be Processed, Plant Capacity, Process, and Products

The plant has a nominal processing capacity of 10 tons/d of Zircaloy-clad 0.947% enriched (preirradiation ^{235}U content) or 6 tons/d of "spike" fuel elements. (Spike fuel consists of 0.947% enriched inner element and 1.25% enriched outer element.) The process steps consist of chemical decladding of the fuel elements, metal dissolution, product decontamination, and product separation and purification by solvent extraction. The uranium product, uranyl nitrate hexahydrate in an acidic solution (UNH), is stored in large tanks and ultimately transferred by tank trailer to the Uranium Oxide Plant (referred to as the UO_3 Plant) for conversion to uranium trioxide. The plutonium, concentrated as an acidic solution of plutonium nitrate, is converted to plutonium oxide and placed into temporary storage facilities located at the Hanford Site.

Neptunium is collected from the Backcycle Waste System on a batch basis and decontaminated in two solvent extraction columns. The product is partially purified and stored in a canyon vessel for future processing.

1.1.3 Wastes

Liquids essentially free of radioactive contamination are discharged to artificial ponds. An estimated discharge rate of about 2.9×10^9 gal/yr of nonradioactive liquid wastes is expected. Slightly contaminated liquid wastes are discharged to underground trenches (cribs). Liquid wastes, containing mixed fission products (FP), are neutralized at PUREX and routed to underground tanks for storage. Noncontaminated solid waste is compacted and buried in a sanitary landfill. Contaminated solid wastes are segregated as to level and type of contamination. Industrial solid wastes contaminated with FP are buried in regulated zone burial trenches, while wastes containing transuranics are packaged and buried in 20-yr retrievable storage.

All radioactive elements in gaseous effluents from the PUREX Plant will be below the concentration limits specified by guidelines[4] for unrestricted areas. Krypton and tritium will be present in concentrations somewhat above the guidelines in the gases at the top of the 200-ft-high stack; however, these elements will be rapidly dispersed by a factor of 10^6 to 10^8 as these gases move away from the stack. The concentrations will be well below the limits as the stack plume travels toward the Hanford Site boundary (see Table 7-3).

THIS PAGE INTENTIONALLY
LEFT BLANK

and DOE and Rockwell Hanford Operations (Rockwell) Standards. An Accident Prevention Standards Manual provides Standards, Accident Prevention Bulletins, Health Bulletins, and Chemical Safety Guides.(6) In addition to line management responsibilities, a safety survey of the facility is conducted every other month and an industrial hygiene survey is conducted annually by IHSD. Resolution of any survey findings requires prompt attention.

1.3 GENERAL PROCESS DESCRIPTION

The PUREX Plant provides chemical decladding and dissolution of irradiated fuel elements and separation, recovery, and purification of uranium and plutonium by solvent extraction. Process support systems provide recovery and reuse of nitric acid and organic solvents; recycle of waste streams; and handling, treatment, and disposition of gaseous, liquid, and solid wastes. The process feed materials and effluents are shown in an input-output diagram (Fig. 1-6).

Chapter 6.0 is exclusively devoted to a detailed description of the process and of the particular operations involved. The process chemical solutions, steam, water, etc. provided by the utilities systems are discussed in Section 5.4. Confinement and management of PUREX process wastes are discussed in Chapter 7.0.

1.3.1 PUREX Process Flow

The PUREX process flow is diagrammed in Figure 1-7; a description follows.

1.3.1.1 Irradiated Fuel Receipt. Irradiated fuel elements, enclosed in canisters and loaded into a shipping cask, are received in the PUREX railroad tunnel in specially designed rail cars.

The charging operation begins when the double barrel canisters are individually removed from the cask by the canyon crane. A radiation-measuring device is installed in the PUREX railroad tunnel in a location that allows detection and measurement of the radiation emanating from the fuel as the canisters are removed from the cask and transported to the dissolver. The approximate age of the material is then determined from instrument calibration data. This helps to ensure that the fuel has been aged at least 180 d to allow the natural decay of the short-lived radionuclides. Should a canister show a high radiation level and further checking of records and instruments fails to explain the problem, the canister is returned to N Reactor. Otherwise, the canisters are transferred to the dissolver. Empty canisters are replaced in the cask and the rail car is cleaned and returned to the N Reactor area.

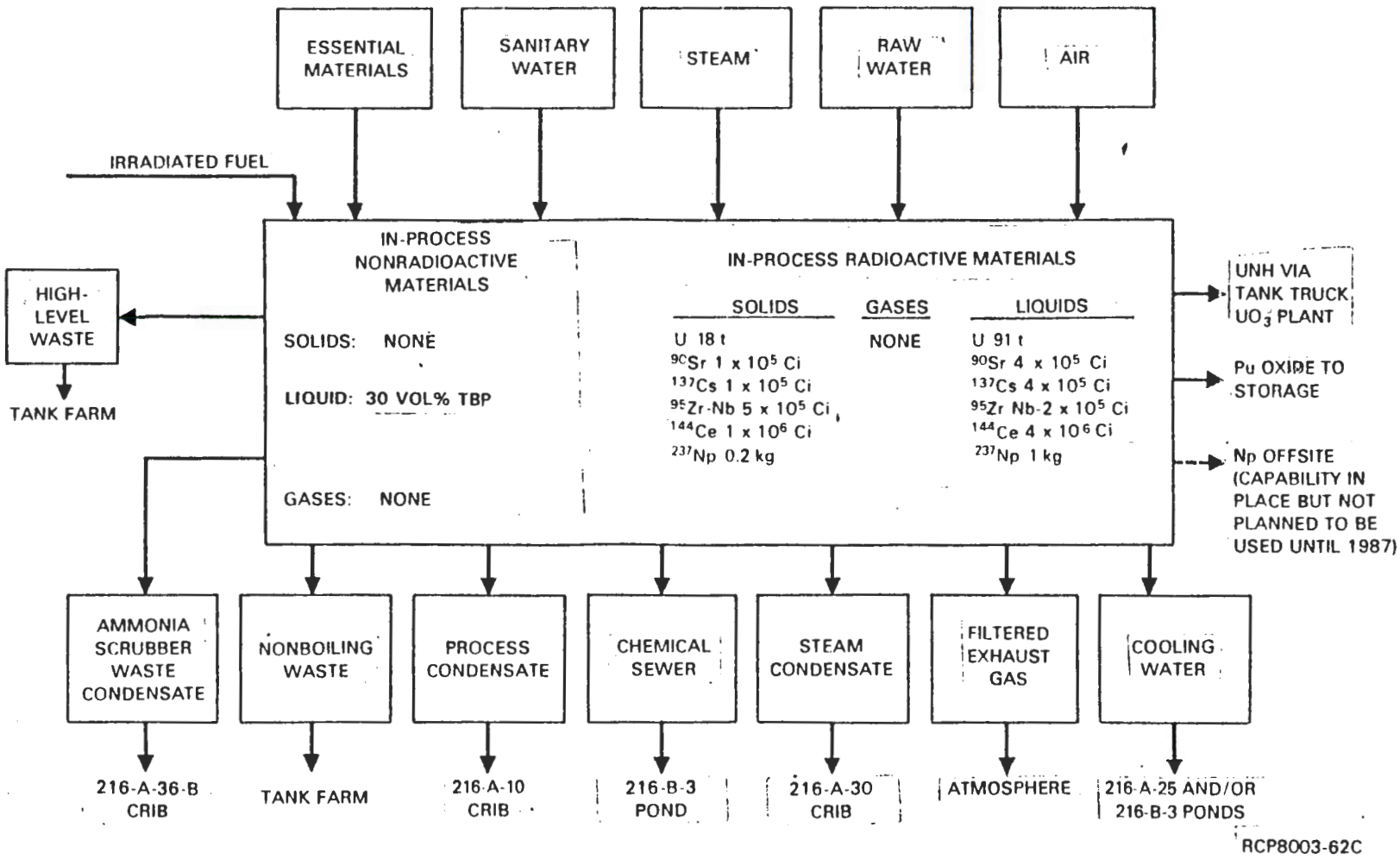

FIGURE 1-6. PUREX Plant Input-Output Diagram--Operating N Fuels.

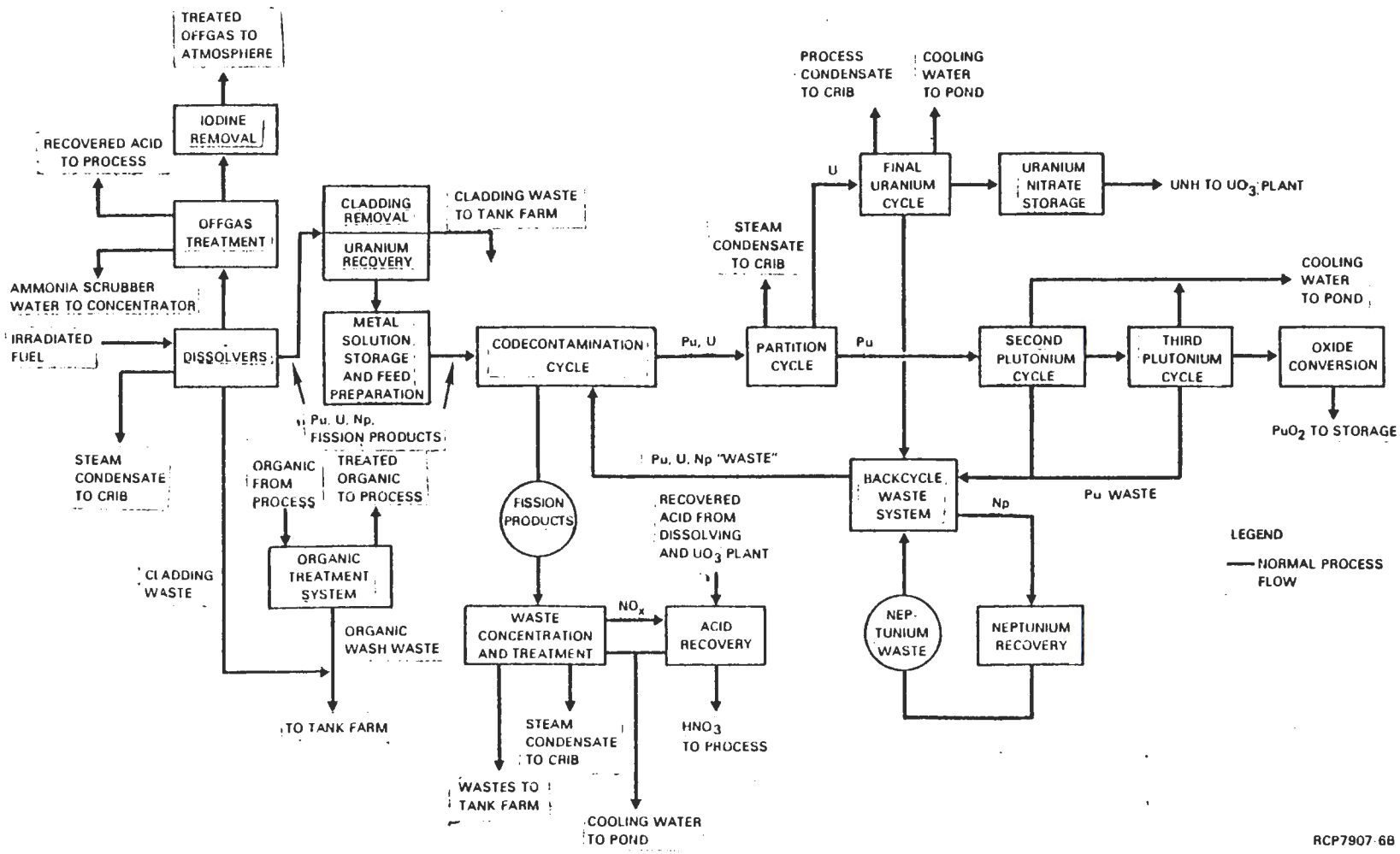

FIGURE 1-7. PUREX Plant Simplified Flow Diagram.

1.3.1.2 Feed Preparation. The properly aged fuel elements in the canisters are charged (dumped) to dissolvers. To remove the Zircaloy cladding from the fuel elements, the Zirflex process is used. This process employs a boiling solution of ammonium fluoride and ammonium nitrate to dissolve the cladding. Potassium hydroxide is then used to convert uranium and plutonium fluoride compounds to hydrated oxides (metathesis). The cladding waste, metathesis waste, and rinse solutions are centrifuged to remove solid uranium and plutonium compounds. These compounds are metathesized (if required) and/or dissolved in nitric acid. The resulting acid solution is blended with the feed.

After completion of decladding and metathesis, the uranium is dissolved in nitric acid and the metal solution is transferred to accountability and storage tanks. The uranium metal solution from the dissolving step is given any needed adjustments in composition or concentration, and rework solutions (returned from subsequent process steps) are added for recycle. At this point, the feed solution is a slightly acidic aqueous solution of uranyl nitrate, containing plutonium and essentially all of the nonvolatile fission products.

1.3.1.3 Codecontamination Cycle. In this cycle, the uranium, plutonium, and neptunium are extracted into an organic solvent to separate them from the bulk of the FP, the americium, and the curium that remain in the aqueous stream. The organic solvent is a 30 vol% tributilized phosphate (TBP) extractant in hydrocarbon diluent. The aqueous waste stream is concentrated, partially denitrated, made alkaline, and stored in underground storage tanks.

1.3.1.4 Partition Cycle. The uranium-plutonium-neptunium organic solvent stream is then contacted in a partitioning column (1BX) with an aqueous countercurrent stream containing a chemical reducing agent that causes the plutonium to transfer into the aqueous phase, and thus be contained in the stream leaving the bottom of the column. This aqueous product solution enters the 1BS column where it is scrubbed with fresh organic solvent to remove residual uranium and is then routed to the second plutonium cycle. The bulk of the uranium and neptunium remains in the organic solvent stream that flows out the top of the 1BX column.

The exiting organic stream is fed to another column in which the uranium and neptunium are countercurrently stripped from the organic phase into a dilute aqueous nitric acid stream. The stripped organic solvent is treated in the organic recovery system and reused in the process.

The exiting aqueous uranium product stream (containing neptunium) is fed to the tower of a steam-heated concentrator, where it is concentrated by a factor of 7 to 8. The concentrator is designed and operated to remove, by steam-stripping, entrained organic solvent which might have entered with the product stream. This prevents accumulation of an organic phase in the

concentrator and reduces the possibility of formation of potentially explosive "red oil," a complex of nitrated degraded solvent with uranium or other heavy metals. The process condensate stream is recycled as makeup water for various solvent-extraction streams.

1.3.1.5 Second Plutonium Cycle. The plutonium stream is processed through a second extraction and stripping cycle for continued purification from uranium, FP, and other metallic impurities.

1.3.1.6 Third Plutonium Cycle. The third plutonium cycle further reduces the FP and other metallic impurities to complete the purification of the plutonium product.

The product stream is also steam-stripped to remove residual organic solvent and to reduce the probability of the red oil formation. The product stream is then concentrated to product level concentration and transferred to storage tanks, where it is sampled, analyzed, and held for conversion into plutonium oxide.

The overhead process condensates from the stripper and concentrator, normally containing only trace amounts of plutonium, are routed to the third plutonium cycle feed tank for rework and recovery.

1.3.1.7 Plutonium Oxide Production. The plutonium nitrate solution is converted to plutonium oxide by precipitating the plutonium as the oxalate, which is calcined to produce the oxide. The detailed process is described in Chapter 6.0. The plutonium oxide then goes to a blender, is thoroughly mixed, and sampled. If the sample analyses indicate that the plutonium oxide meets product specifications, it is transferred to the canning operation; if not, it is returned for recycling through the second stage calciner or the plutonium oxide rework (dissolution) facility. The final product is chemically and radiolytically stable.

Can filling operations are remotely controlled. The cans are weighed, filled, the slip-lid is placed on the can, and the filled can is weighed. The can lid is then tape sealed. After tape sealing, the can is bagged out and placed into a second can, which is sealed by a commercial can-sealing machine. The can assembly is sent by conveyor to a final canning location where the assembly is loaded into a third can. The third can is then labeled, sealed, and the can assembly placed into a shipping container for transfer to storage.

As a backup system, the existing capability to load out plutonium nitrate into containers (PR cans) will be maintained. A permanent facility to be located in the PR room is being designed for the loadout of plutonium nitrate solution into either the metal PR cans or polyethylene bottle-type containers. This facility will also accommodate the loadin of product solution from these containers to the process equipment.(7) The temporary storage of plutonium nitrate at the PUREX Plant and its transport to a nearby existing plutonium production facility at the site is an alternative

procedure to the production of plutonium oxide in the new facility within the PUREX building. Safety analyses indicated an acceptable risk for the loadout and temporary storage of plutonium nitrate at PUREX.[8,9]

1.3.1.8 Final Uranium Cycle. The concentrated uranium product solution from the partition cycle is adjusted as feed for the final uranium cycle. This cycle provides final decontamination from plutonium and FP, and consists of extraction into the organic phase followed by stripping back into the aqueous phase. The uranium product solution is steam stripped to remove residual organic solution, concentrated, transferred to 203-A for interim storage, and then shipped to the UO_3 Plant.

The final uranium concentration step includes basically the same elements as described previously for the partition cycle uranium stream except that the relatively uncontaminated process condensate is sent to an underground crib for final disposal instead of being recycled within the process.

The aqueous waste contains a small percentage of the uranium plus the residual plutonium, neptunium, and FP. It is routed to the backcycle waste concentrator and subsequently fed, along with virgin feed metal solution, to the codecontamination cycle.

1.3.1.9 Neptunium Recovery. The PUREX Plant will produce a neptunium product. When neptunium recovery is not employed, the neptunium is contained in the codecontamination cycle aqueous waste stream, where it is rejected with the FP and americium.

The aqueous waste streams from both the uranium and plutonium cycles contain neptunium. These streams are collected in the backcycle waste system and concentrated for recycle back to the codecontamination cycle to minimize losses of associated uranium, plutonium, and nitric acid. During the neptunium recovery operation, a portion of the backcycle waste stream is used as feed; then, in a continuous extraction-stripping cycle, neptunium continues to accumulate as other nuclides (e.g., plutonium, uranium, and FP) are removed and returned to the backcyle waste system. This operation continues until the neptunim concentration reaches the desired level. At this point, the neptunium cycle is isolated and operated on total neptunium recycle until the concentrations of plutonium, uranium, and FP are low enough for neptunium product solution transfer to temporary storage.

When the final purification system operation commences, the stored neptunium product solution will be further purified in an ion exchange column. The column resin will then be washed to remove residual FP and plutonium prior to the elution of the neptunium from the resin. The purified neptunium product will then either be retained in a storage tank or packaged for eventual shipment offsite. The remaining effluent stream and the wash will be routed to the backcycle waste system. The reactivation of the Neptunium Purification Process (Q Cell) will be described in a future addendum to this FSAR.

4.0 PRINCIPAL DESIGN CRITERIA

4.1 PURPOSE AND STATUS OF PLANT

The Hanford Site Plutonium-Uranium Reduction Extraction (PUREX) Plant was originally designed, constructed, and operated to receive and process irradiated aluminum-clad fuel from the Hanford production reactors for the recovery and purification of uranium and plutonium. Modifications and additions have been made to the primary processing systems. These changes make it possible for the systems to provide the following services:

- Receive and process Zircaloy-clad fuel from N Reactor
- Recover, purify, and ship neptunium nitrate
- Convert plutonium nitrate to plutonium oxide, then package and transfer to storage.

General and detailed descriptions of PUREX Plant processes and operations are presented in Chapters 1.0 and 6.0, respectively.

The currently defined functions of PUREX follow:

- Receive and process irradiated fuel from N Reactor
- Recover, purify, and transfer uranyl nitrate hexahydrate in acid solution (UNH)
- Produce, package, and transfer plutonium oxide powder
- Recover, purify, and store neptunium nitrate.

The processing capacity of PUREX is 10 tons/d for 94-Metal* fuel and 6 tons/d for 94/125-Metal "Spike"** fuel.

More detailed descriptions of the plant feed, products, and functions are provided in the following subsections.

The PUREX Plant was designed in the 1950s (30 yr ago) to design criteria then current with respect to site and national standards such as the 1952 Uniform Building Code (UBC).[1] These "designed-in" features were maintained during its operating life and, during the shutdown-standby period, have been examined and renovated as part of the restart program. More than 5 yr of "operational testing" and "readiness testing" and 2 yr of "readiness review" have been employed to determine the suitability for restart. Any significant deterioration that has occurred since completion of construction has been or will be corrected prior to restart.

---

*Fuel enriched to a ^{235}U content of 0.947% (also called 95-Metal).

**The inner element of the "spike" fuel is enriched to 0.947% ^{235}U and the outer element is enriched to 1.25% ^{235}U.

Startup Criteria[2] for the PUREX Plant have been prepared and approved. These criteria require a number of improvements in the original design of the PUREX Plant, particularly in the measurement and control of gaseous and liquid effluents. The PUREX Plant will restart in conformance with the above criteria.

Beyond the original PUREX Plant Design Criteria of the 1950s and the specific improvements of the Startup Criteria, this Safety Analysis Report (SAR) was prepared in accordance with the backfitting requirements of DOE Order 5481.1A[3] based upon current technical criteria (site and national). The PUREX Plant is not required to meet current design criteria for modern plant construction, such as those contained in DOE Order 6430.[4] However, it shall meet the safety requirements of DOE Manual Chapters covering facility operation. Hazards have been identified which have been or will be eliminated, controlled, or mitigated through reasonable measures. Upgrading actions based on cost-benefit trade-offs have been identified in the text of this SAR. Upgrading actions based on cost-benefit trade-offs not included in the startup configuration are described in supporting (referenced) documentation.

The preceding approach has been used to demonstrate that there is reasonable assurance that PUREX Plant operation can be resumed in a manner that will limit risks to the health and safety of the public and employees and adequately protect property and the environment.

4.1.1 Plant Feed

The feed material to be processed in PUREX consists of irradiated fuel discharged from N Reactor and aged a minimum of 180 d after discharge from the reactor. The fuel elements consist of two concentric cylinders or tubes fabricated of metallic uranium and clad in Zircaloy. The fabrication process is depicted in Figure 4-1. The fuel elements are of two basic types. One (Mark IV) is a two-part, tube-in-tube element; both parts are composed of uranium enriched to 0.947% ^{235}U. The other (Mark IA) is also a two-part element, but with the inner tube enriched to 0.947% ^{235}U and the outer tube enriched to 1.25% ^{235}U. The Mark IA element, called the "spike," is used to obtain the desired reactivity pattern in the N Reactor. As shown in Table 4-1, there are differences in lengths and in cladding thicknesses between the two types and, thus, minor differences in the ratio of uranium and zirconium per unit of length. About 80 wt% of the feed inventory will consist of Mark IV elements; the remaining 20 wt% will be Mark IA elements. Physical characteristics of the Mark IV and Mark IA elements are included in Figure 4-2. For charging, the fissile material limits for the Mark IA elements are set at 12,000 lb of uranium, containing approximately 12 kg of plutonium. For the Mark IV elements, the charging limits are governed only by the physical dimensions of the dissolver. However, the amount of plutonium in solution in the dissolver is limited to the range of 11.7 to 14.5 kg depending on the ^{240}Pu isotopic content. Table 4-2 shows the chemical compositions of the more commonly used spent fuels to be processed.

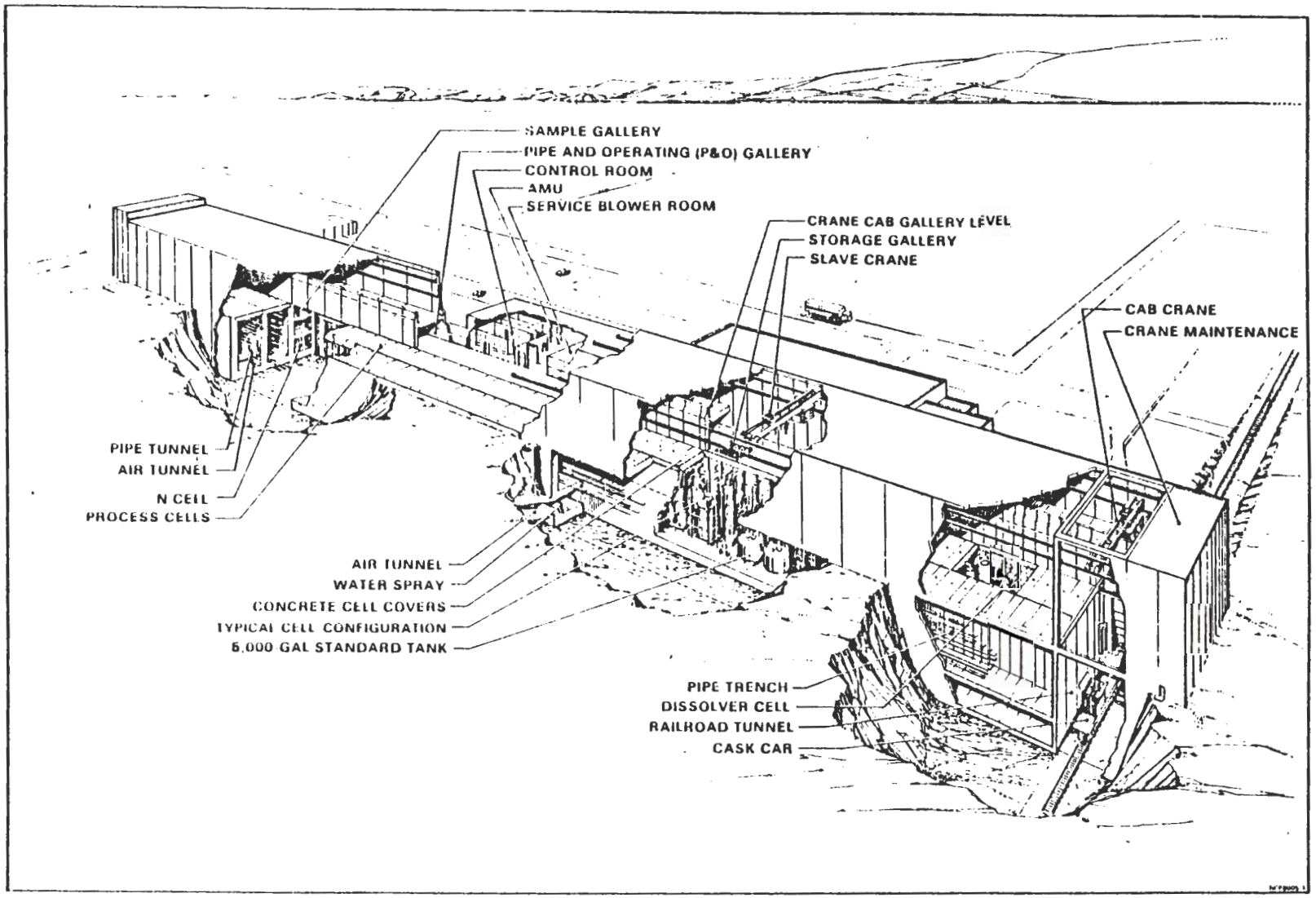

FIGURE 5-4. PUREX Building Perspective.

The pipe trench that parallels the cells is 30 ft 6 in. deep; this trench is 12 ft wide at the top and narrows to 11 ft as the wall between the cells and the pipe trench thickens from 1 ft 6 in. to 2 ft 6 in. The wall between the cells and the pipe trench supports one edge of the 3-ft-thick cover blocks that cover the cells and the 2-ft 6-in.-thick cover blocks that cover the pipe trench. The air tunnel, which lies directly below the pipe trench, is 11 ft wide and 7 ft 6 in. high. This tunnel exhausts the ventilation air from the cells to the outside filter cells and stack facility. The south wall of the canyon at the air tunnel and pipe trench levels is 5 ft 6 in. thick. From the canyon deck level to the master crane level, the south wall is 4 ft thick and again narrows to 2 ft 6 in. thick from the crane level to the roof. The roof is formed as a concrete beam, 2 ft 6 in. thick at the edges and 1 ft thick in the center. No internal truss work is used to support the ceiling of the canyon.

The railroad tunnel used for bringing in casks of irradiated fuel elements and removing equipment from the canyon runs north and south, forming a "T" at the east end of the canyon. On the east side of the railroad tunnel is a water-filled basin for storing irradiated fuel. The pool cell for storing "hot" equipment, the decontamination and storage cell, and the hot shop are located at the west end of the canyon at cell floor level. A 3-ft shield wall separates the hot shop from the decontamination cell.

The building is supported on a 5-ft 6-in.-thick concrete slab with reinforcement in the top half. Transverse expansion joints are provided at 90-ft intervals throughout the length of the building. All expansion joints in shielding walls and slabs are offset and keyed to ensure the necessary shielding requirements.

Five trap pits and two pump pits are attached to the south side of the building. The trap pits were built to handle the steam condensate from the process heating coils and steam chests. The pump pits were built to handle the trap pit drainage. The process steam traps are now located in the canyon.

5.2.2.1 Remote Process Cells. Process cells are located in-line on the longitudinal axis of the building between the pipe trench and sample gallery and are designated as follows:

Cells	Function
A,B,C	Metal dissolution
D	Metal solution storage
E	Feed preparation and cladding waste treatment
F	Waste treatment and process ventilation
G	Solvent treatment system 1
H	First decontamination system
J	Partition system, neptunium recovery
K	Uranium decontamination and concentration system
L	Plutonium decontamination and concentration system
M	Equipment decontamination and storage, plutonium nitrate storage

- The equipment, in general, is designed with the same physical dimensions as comparable canyon assemblies, but fabricated to commercial allowances with conventional flanges and supporting structures. All equipment maintenance is performed by contact methods under regulated work procedures.

5.2.2.10 Uranium Product Handling. The 203-A tank farm is used for storage and shipping of UNH product from the PUREX Plant. The UNH product is batch-transferred through a pipeline from TK-K6 in the PUREX canyon to one of four UNH storage tanks in the 203-A area. The 203-A area is described in Section 5.3.1.

5.2.2.11 Product Removal Room. The PR room is located in the west section of the storage gallery, north of L cell and separated from N cell to the west by a 6-ft-wide pipe chase. The PR room is 41 ft 2 in. long and 19 ft 6 in. wide and contains three concrete-shielded areas that isolate contained equipment from the working area. One area isolates the vacuum/rework tank (TK-L11) enclosed in a glovebox. Another area isolates the plutonium sampler tank (TK-L9) enclosed in a glovebox and the third area contains an empty glovebox that formerly enclosed another plutonium sampler tank (TK-L10). There are no plans, at present, to replace TK-L10. In addition, there is a load-out facility for shipping containers in the PR room, the L13-10 glovebox and load-out hood. A doorway from the PR room provides access to L cell for possible contact maintenance of the 2B column and third plutonium system. The PR room layout is shown in Figure 5-10.

Eventually the L13-10 glovebox and load-out hood will be replaced by an upgraded glovebox L14 that is designed to load out plutonium nitrate into the existing metal shipping containers or polyethylene bottle-type containers or load in from the same containers.(10)

5.2.2.12 Neptunium Purification Unit. The neptunium purification system, also known as Q cell, is located at the storage gallery level of the PUREX building between the west end of the PIV room and the PR room. As shown in Figure 5-11, Q cell includes a control room, a load-out room, an AMU level, a maintenance room and shielded maintenance hood, and a shielded hot cell. The AMU level is located above the control room. Access to Q cell is obtained through the PR corridor and SWP lobby, or, in emergencies, through the PIV room.

The Q cell was installed in the building, along with the neptunium recovery and decontamination facility in J cell (J cell package), to further purify the neptunium recovered in the J cell package prior to shipment offsite. The Q cell purification system is designed for batch operation. The neptunium recovery and decontamination facility (J Cell package) is currently in operation. The Q Cell final purification system is expected to be re-activated, at which time this report will be amended.

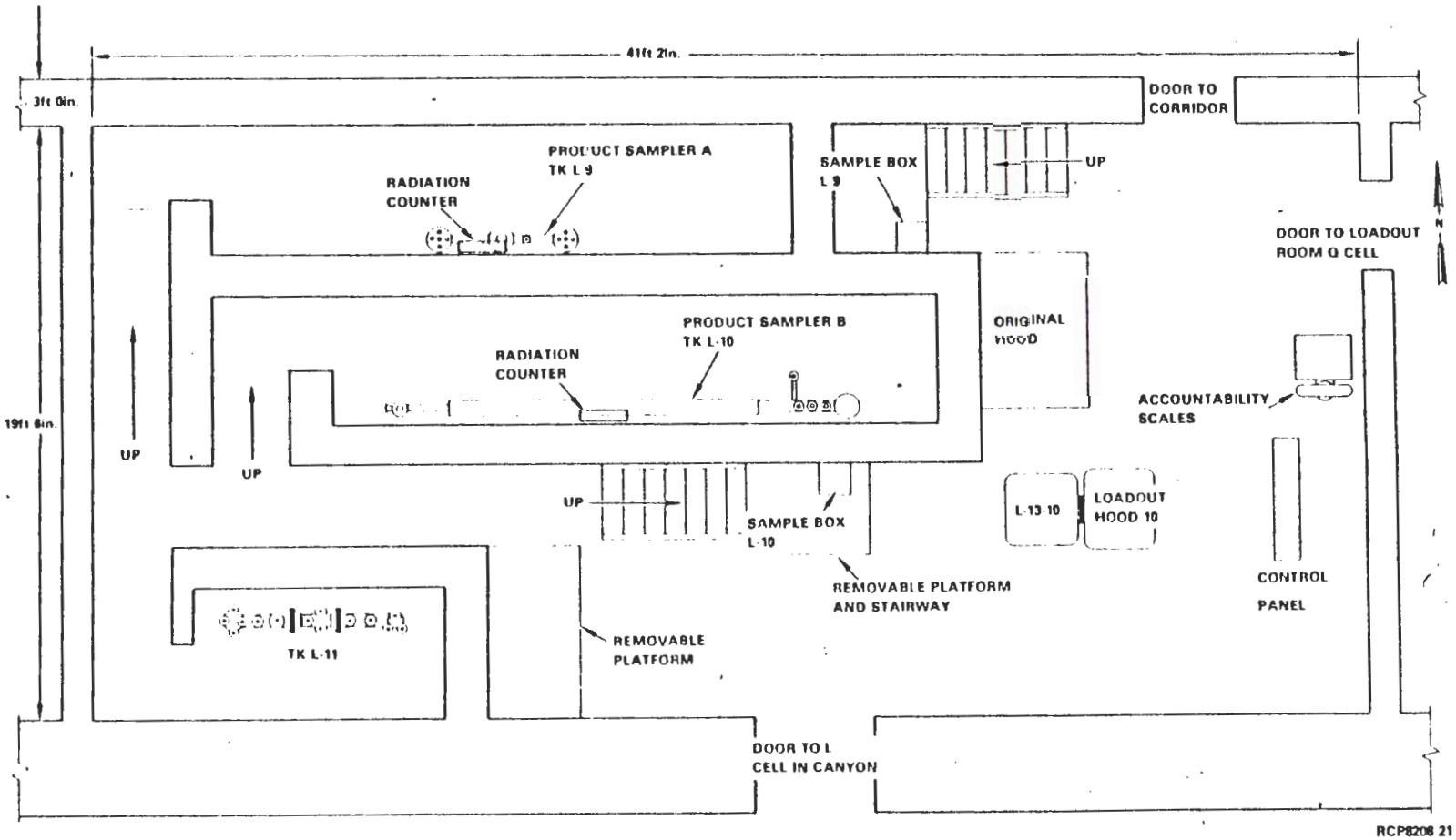

FIGURE 5-10. Product Removal Room--Plan View.

CONTENTS

6.0 Process Systems 6-1

6.1 Process Description 6-1
6.1.1 Narrative Description 6-1
6.1.2 Major Components 6-8
6.1.3 Operational Control 6-8
6.1.4 Safety Criteria and Assurance 6-15

6.2 Process Chemistry and Physical Chemistry Principles 6-32
6.2.1 Zirflex Process Chemistry 6-32
6.2.2 Chemistry of Fuel Element Dissolution 6-35
6.2.3 Solvent Extraction Process Chemistry 6-37
6.2.4 Plutonium Nitrate Conversion/Calcination Process Chemistry 6-37
6.2.5 Nitric Acid Recovery Process Chemistry 6-42
6.2.6 Solvent Recovery System Process Chemistry 6-43

6.3 Fuel Receipt and Handling 6-44
6.3.1 Functional Description 6-44
6.3.2 System Description 6-46
6.3.3 Safety Criteria and Assurance 6-53

6.4 Chemical Process Systems 6-59
6.4.1 Fuel Decladding and Dissolution 6-59
6.4.2 Solvent Extraction 6-80
6.4.3 Plutonium Oxide Production 6-127
6.4.4 Recycle and Recovery Systems 6-149
6.4.5 Product Rework Systems 6-167

6.5 Process Support Systems 6-182
6.5.1 Process Instrumentation and Control Systems 6-182
6.5.2 Nitric Acid Recovery System 6-230
6.5.3 Building Sumps 6-245
6.5.4 Utilities and Services 6-252

6.6 Control Rooms 6-259
6.6.1 Functional Description of Control Rooms 6-259
6.6.2 Safety Criteria and Assurance for Control Rooms 6-275

6.7 Sampling--Analytical 6-277
6.7.1 Process Samplers 6-277
6.7.2 Analytical Laboratory 6-282

6.8 Uranium Product Handling System 6-294
6.8.1 Functional Description 6-294
6.8.2 Major Components 6-294
6.8.3 Safety Criteria and Assurance 6-294
6.8.4 Operational Control 6-296

6.9 References 6-296

FIGURES:

6-1. PUREX Process Flow Diagram 6-3
6-2. PUREX Plant Input-Output Diagram--Standby 6-9
6-3. PUREX Plant Input-Output Diagram--Operation 6-10
6-4. Plutonium Polymerization at Various Plutonium and Acid Concentrations and Temperatures 6-21
6-5. N Reactor Fuel Canisters 6-48
6-6. K Basin Fuel Cask 6-49
6-7. N Basin Fuel Cask 6-50
6-8. N Reactor Cask Car 6-51
6-9. PUREX "Low-Boy" Cask Car 6-52
6-10. Dissolver Operation--Decladding 6-60
6-11. Dissolver Operation--Metathesis 6-61
6-12. Dissolver Operation--Uranium Dissolution 6-63
6-13. Annular Dissolver 6-65
6-14. Downdraft Condenser 6-67
6-15. Accountability Measurement and Sampling 6-68
6-16. Codecontamination Flowsheet 6-81
6-17. Partitioning Flowsheet--Uranium, Plutonium, Neptunium . . 6-81
6-18. Partitioning Flowsheet--Uranium 6-82
6-19. Final Uranium Cycle Flow Chart 6-84
6-20. Second Plutonium Cycle Flow Chart 6-85
6-21. Third Plutonium Cycle Flow Chart 6-86
6-22. Hanford PUREX Pulse Column 6-88
6-23. Standard Tank 6-90
6-24. PUREX Concentrator 6-92
6-25. 2AF Tank 6-94
6-26. 3A Feed Tank 6-95
6-27. Product Receiver Tank 6-96
6-28. 2A Column 6-97
6-29. 2B Column 6-98
6-30. 3A Column 6-99
6-31. 3B Column 6-100
6-32. 3BP Stripper 6-101
6-33. 3BP Concentrator 6-102
6-34. Flow Chart--Plutonium Oxide Production Facility 6-129
6-35. Precipitator Vessel 6-134
6-36. Vacuum Drum Filter 6-135
6-37. Calciner 6-137
6-38. Product Scalper 6-138
6-39. Plutonium Oxide Powder Blender 6-139
6-40. Can Filler Conveyor 6-141
6-41. Flowsheet--Backcycle Waste System 6-150
6-42. E-H4 Sectionalized Concentrator 6-151
6-43. Organic System Flow Chart 6-157
6-44. Tanks (TK-G1 and TK-R1) 6-160
6-45. Tanks (TK-G2 and TK-R2) 6-161
6-46. Tanks (TK-G5 and TK-G7) 6-162
6-47. TK-L11 Piping and Solution Transfer Systems 6-170
6-48. Neptunium Recovery System--Flowchart--J Cell Package . . 6-174
6-49. 2N Feed Tank (TK-J21) 6-176
6-50. 2N Column 6-177
6-51. 2P Column 6-178
6-52. Neptunium Storage Tank 6-179

FIGURES: (Continued)

6-53. H2 Interface Control System 6-206
6-54. Typical Process Tank 6-212
6-55. Detail of Jet Assembly 6-214
6-56. Typical PUREX "A" - Type Colum 6-215
6-57. Typical PUREX Reboiler with an Original Organic Stripper Tower 6-217
6-58. First Decontamination and Partition System--In-Line Monitors 6-222
6-59. Second and Third Plutonium Systems--In-Line Monitors . . 6-223
6-60. Final Uranium System--In-Line Monitors 6-224
6-61. Hydrogen-Ammonia Gas Monitor System 6-225
6-62. Nitrite Monitor System 6-227
6-63. Schematic of Gamma and Alpha Monitor System 6-228
6-64. Gamma and Alpha In-Line Monitors--Sample Stations 6-229
6-65. Neutron Monitors 6-231
6-66. Location of the 206-A and 293-A Facilities 6-233
6-67. T-XA Tower 6-234
6-68. T-XB Tower 6-236
6-69. T-F5 Acid Absorber 6-238
6-70. Fractionator Flow Schematic 6-239
6-71. T-U6 Tower 6-240
6-72. M and N Cell Sump Routings 6-251
6-73. Nitric Acid System 6-253
6-74. Organic Makeup System 6-260
6-75. Solvent System 6-261
6-76. Caustic System 6-262
6-77. Floor Plan of Central Control Room 6-265
6-78. Floor Plan of Headend Control Room 6-267
6-79. Floor Plan of Power Control Room 6-268
6-80. N Cell Control Rooms 6-270
6-81. Floor Plan of Dispatcher's Office 6-273
6-82. Type A Sampler 6-278
6-83. Type B Sampler 6-280
6-84. Layout--Analytical Laboratories 6-283
6-85. 203-A Piping 6-295

TABLES:

6-1. PUREX Plant Vessel and Sump Schedule 6-11
6-2. Summary Description of Process Control Instruments . . . 6-16
6-3. Typical Nuclear Criticality Safety Mechanisms 6-20
6-4. PUREX Process Vessels and Typical Limits 6-23
6-5. Fission Product Activity of Fuels to be Processed 6-25
6-6. Fission Product Activity in Tanks TK-D3, TK-D4, and TK-D5 6-26
6-7. Fission Product Activity in Tanks TK-F26, TK-F15, TK-F16, and TK-F6 6-27
6-8. PUREX Plant Vessel Schedule--Plutonium Inventory 6-28
6-9. Potential Hazardous Energy Sources 6-33
6-10. Chemical Reactions--Cladding Removal 6-34
6-11. Solvent Extraction Chemistry 6-38
6-12. Dissolver Charging--Off-Standard Conditions 6-54
6-13. Typical Headend Equipment Description 6-66

TABLES: (Continued)

6-14. Decladding and Uranium Dissolution--Off-Standard Conditions 6-70
6-15. Solvent Extraction Column Data 6-89
6-16. Tank Descriptions 6-91
6-17. Process Hazards Analysis--Solvent Extraction 6-103
6-18. Plutonium Cycle Vessels 6-112
6-19. Solvent Extraction--Off-Standard Conditions 6-115
6-20. Oxide Production Equipment 6-131
6-21. Process Hazard Analysis--Plutonium Oxide Production . . . 6-143
6-22. Process Hazard Analysis Backcycle Waste System 6-153
6-23. Solvent Treatment Equipment 6-159
6-24. Process Hazard Analysis--Solvent Recovery 6-163
6-25. Solvent Recovery--Off-Standard Conditions 6-166
6-26. Process Hazard Analysis--Plutonium Rework and Recovery 6-168
6-27. Process Hazard Analysis--Neptunium Recovery 6-181
6-28. Neptunium Recovery--Off Standard Conditions 6-183
6-29. Process Control Instrumentation Systems 6-184
6-30. Instrumentation Symbol Legend 6-204
6-31. Programmer Switch Position and Contacts Activated 6-219
6-32. Process Hazard Analysis--Nitric Acid Recovery 6-243
6-33. Acid Fractionator--Off-Standard Conditions 6-244
6-34. Process Control Panel and Power Control Layout 6-272
6-35. Vessels Equipped with Type A Samplers 6-279
6-36. Vessels Equipped with Type B Samplers 6-281
6-37. Vessels Equipped with Type C Samplers 6-282
6-38. Laboratory Analyses--Location and Equipment 6-288
6-39. Process Hazards Analysis--Sample-Analytical 6-292
6-40. Process Hazard Analysis--Product Handling 6-296

9413219.1347

TABLE 6-1. PUREX Plant Vessel and Sump Schedule. (Sheet 1 of 4)

Item	Function	Nominal volume (gal)	Size
TK-A3,-B3,-C3	Dissolver	5,000	9 ft 3 in. by 4 ft 11 in. ID[a] by 14 ft
TK-A3-4,B3-4, C3-4	NH_3 scrub waste	2,100	4 ft 0 in. by 8 ft 6 in. by 10 ft
TK-D1	Metathesis storage	5,000	10 ft 0 in. by 9 ft 3 in.
TK-D2	Coating waste	5,000	10 ft 0 in. by 9 ft 3 in.
TK-D3,-D4	Metal solution	7,700	10 ft 6 in. by 12 ft 8 in. by 9 ft 2 in.
TK-D5	Metal solution	5,000	10 ft 0 in. by 9 ft 3 in.
TK-E1	Centrifuge product	1,700	7 ft 0 in. by 6 ft 9 in.
G-E2	Coating waste centrifuge	180	48 in. by 25 in.
TK-E3	Centrifuge feed	5,000	10 ft 0 in. by 9 ft 3 in.
TK-E3-2	NH_3 scrub waste	250	3 ft 2 in. by 4 ft 6 in.
G-E4	Coating waste centrifuge	125	40 in. by 25 in.
TK-E5	Centrifuge waste	5,000	10 ft 0 in. by 9 ft 3 in.
TK-E6	HAF makeup	5,000	10 ft 0 in. by 9 ft 3 in.
TK-F3	Acid receiver	5,000	10 ft 0 in. by 9 ft 3 in.
T-F5	Acid absorber	300	10 ft OD[b] by 9 ft 3 in. - 3 ft-6 in. ID by 9 ft
E-F6	1WW concentrator	2,200	Two 4 ft 5 in. barrels by 12 ft and one 2 ft 6 in. barrel by 12 ft
TK-F4	Vessel vent condensate	5,000	10 ft 0 in. by 9 ft 3 in.
E-F11-1	ASW concentrator	2,500	Two 4 ft 5 in. barrels by 12 ft and one 2 ft 6 in. barrel by 12 ft
TK-F7	1WF	3,800	6 ft 9 in. by 10 ft 6 in. by 9 ft 2 in.
TK-F8	Waste rework	5,000	10 ft 0 in. by 9 ft 3 in.
TK-F10	3WF decanter	5,000	10 ft 0 in. by 9 ft 3 in.
TK-F12	E-F11 feed	5,000	10 ft 0 in. by 9 ft 3 in.
TK-F13	Rework storage	5,000	10 ft 0 in. by 9 ft 3 in.
TK-F14	Decanter (not usable)	400	4 ft 0 in. by 5 ft 0 in.
TK-F15	1WW denitration	5,000	10 ft 0 in. by 9 ft 3 in.
TK-F16	1WW denitration	5,000	10 ft 0 in. by 9 ft 3 in.
TK-F17	Tube bundle flush	1,200	4 ft 2 in. by 12 ft 0 in.
TK-F18	Utility waste	5,000	10 ft 0 in. by 9 ft 3 in.
TK-F26	1WW receiver	3,600	6 ft 9 in. by 10 ft 6 in. by 9 ft 2 in.
TK-G1	10F	5,000	10 ft 0 in. by 9 ft 3 in.
T-G2	10 column	2,000	34 in. dia by 32 ft
TK-G2	10S	1,900	7 ft 0 in. by 6 ft 9 in.
TK-G5	10O	15,000	10 ft 6 in. by 16 ft by 14 ft
TK-G6	10D decanter	450	4 ft by 5 ft
TK-G7	10O pump tank (turbomixer not used)	15,000	10 ft 6 in. by 16 ft by 14 ft
TK-G8	10W	5,000	10 ft 0 in. by 9 ft 3 in.
TK-H1	HAF	5,000	10 ft 0 in. by 9 ft 3 in.
T-H2	HA column	1,850	26 in. dia by 40 ft
T-H3	HS column	1,770	34 in. dia by 26 ft
E-H4	3WB concentrator	2,700	Two 4 ft 5 in. barrels by 12 ft and one 2 ft 67 in. barrel by 12 ft
TK-J1	3WB	5,000	10 ft 0 in. by 9 ft 3 in.
TK-J2	Neptunium storage	1,340	4 ft 2 in. by 14 ft 0 in.
TK-J3	1BXF	5,000	10 ft 0 in. by 9 ft 3 in.
T-J4	1BS column	130	8 in. dia by 14 ft
TK-J5	2AF	370	8 ft 6 in. OD by 8 ft 0 in. ID by 8 ft 11 in.
T-J6	1BX column	1,600	32 in. dia by 33 ft
T-J7	1C column	1,770	34 in. dia by 26 ft
E-J8	1CU concentrator	3,700	Two 4 ft 7 in. barrels by 10 ft and one 2 ft 6 in. barrel by 14 ft
TK-J21	2NF	320	4 ft 5 in. OD by 3 ft 11 in. ID by 14 ft 8 in.
T-J22	2N column	150	7 in. dia by 38 ft
T-J23	2P column	100	7 in. dia by 24 ft
TK-K1	2DF	5,000	10 ft 0 in. by 9 ft 3 in.
T-K2	2D column	1,370	24 in. dia by 16 ft - 32 in. dia by 16 ft
T-K3	2E column	1,770	34 in. dia by 26 ft
E-K4	2EU concentrator	3,700	Two 4 ft 7 in. barrels by 14 ft and one 2 ft 6 in. barrel by 14 ft

TABLE 6-1. PUREX Plant Vessel and Sump Schedule. (Sheet 2 of 4)

Item	Function	Nominal volume (gal)	Size
TK-K5	2UC receiver	5,000	10 ft 0 in. by 9 ft 3 in.
TK-K6	UNH product	5,000	10 ft 0 in. by 9 ft 3 in.
T-L1	2A column	130	7 in dia by 40 ft
T-L2	2B column	90	7 in. dia by 30 ft
TK-L3	3AF	120	34 in. OD by 30 in. ID by 12 ft
TK-L4	3A column	40	3-1/2 in. ID by 34 ft
T-L5	3B column	30	3-1/2 in. ID by 22 ft
T-L6	Product stripper	10	Two barrels 4 in. by 8 ft, 3 ft tower
E-L7-1	Product concentrator	10	Two barrels 4 in. by 8 ft, 3 in. tower
TK-L8	Product receiver	10	Two barrels 4 in. by 8 ft
TK-L9	Pu product sampler	11	Three barrels, 5 in. dia by 38 in.
TK-L11	Pu recycle	25	Three 4 in. dia barrels by 12 ft
TK-L13-10	Pu loadout	2.4	6 in. by 21 in.
TK-M1	Equipment decontamination	4,100	7 ft 0 in. by 14 ft 0 in.
TK-M2	Equipment decontamination	1,800	5 ft 0 in. by 14 ft 0 in.
TK-M3	Pu nitrate solution storage	55	Three barrels 6 in. by 14 ft
TK-M4	Pu nitrate solution storage	55	Three barrels 6 in. by 14 ft
TK-M5	Pu nitrate solution storage	55	Three barrels 6 in. by 14 ft
TK-M6	Pu nitrate solution storage	55	Three barrels 6 in. by 14 ft
TK-N3	Pu nitrate feed	3	6 in. by 3 ft
TK-N4	H_2O_2 feed tank	1	4 in. by 20 in.
TK-N5	Prereduction tank	8	6 in. by 5 ft 10 in.
TK-N6	Pump tank	4	6 in. by 3 ft
R-N7	Precipitator	0.8	5 in. by 1 ft
F-N8	Vacuum drum filter	0.3	Half-circle pan 7 in. radius by 8-1/2 in. wide
CA-N9	First-stage calciner	-	3 in. by 5 ft
CA-N10	Second-stage calciner	-	3 in. by 5 ft
TK-N11	Filtrate receiver	6.3	6 in. by 5 ft
E-N13	Filtrate concentrator	7.1	6 in. by 11 ft 9 in.
TK-N15	Filtrate holding tank	26	Three barrels 6 in. by 6 ft 8 in.
TK-N16	Filtrate holding tank	26	Three barrels 6 in. by 6 ft 8 in.
T-N19	Offgas scrubber	2.6	6 in. by 7 ft 6 in.
TK-N20	Liquid seal tank	2.4	6 in. by 1 ft 7 in.
TK-N21	Condensate receiver tank	24	Three barrels 6 in. by 6 ft 8 in.
TK-N22	Condensate receiver tank	24	Three barrels 6 in. by 6 ft 8 in.
TK-N30	Vacuum tank	6	6 in. by 5 ft 6 in.
TK-N33	Closed loop cooling expansion tank	2.1	6 in. by 1 ft 7 in.
TK-N39	Vacuum drop-out	12.25	9 ft 3 in. by 6 in.
TK-N40	Vacuum drop-out	12.25	9 ft 3 in. by 6 in.
TK-N43	Vacuum drop-out	3.3	6 in. dia. by 27 in.
TK-Q1	2PN concentrator feed	12	7 in. by 6 ft
E-Q2	Stripper concentrator	10	6 in. by 20 ft
TK-Q3	3XF feed	110	3 in. annulus by 5 ft 6 in.
T-Q4	3X resin column	16	6 in. by 5 ft 6 in.
TK-Q5	3XW waste	500	48 in. by 5 ft
TK-Q6	3XN receiver	25	18 in. by 2 in.
TK-Q7	Np product loadout	1.5	6 in. by 1 ft
TK-Q8	Sump tank	46	24 in. by 2 ft 2 in.
E-Q9	Vent jet condenser	12	8 in. by 5 ft 6 in.
TK-R1	2OF	5,000	10 ft by 9 ft 3 in.
T-R2	2O column	2,000	34 in. dia by 32 ft
TK-R2	2OX	1,900	7 ft by 6 ft 9 in.
TK-R5	Utility	9,000	10 ft by 14 ft
TK-R6	Utility decanter	430	4 ft by 5 ft 10 in.
TK-R7	2OO	9,000	10 ft by 14 ft

TABLE 6-4. PUREX Process Vessels and Typical Limits. (Sheet 1 of 2)

Vessel	Function	Typical plutonium[a] limit per vessel
TK-A3, -B3, -C3	Dissolver	12,000 lb U ("spike" fuel) 11,700 g (in solution)
TK-A3-4, -B3-4, -C3-4	NH_3 scrubber	500 g
TK-D1	Metathesis recycle	500 g
TK-D2, -E1, -E3 -E5, -G-E2, -E4	Cladding waste handling	500 g
TK-E3-2	NH_3 scrubber	500 g
TK-D3, -D4	Metal solution storage	16,500 g
TK-D5, -E6	Accountability, feed makeup	12,400 g
TK-F3, T-F5	Acid receiver, absorber	500 g
TK-F4	Vessel vent condensate	500 g
T-F6	1WW concentrator	1,200 g
TK-F7	1WF pump tank	12,400 g
TK-F8, -F13	Waste digest/rework	12,400 g
TK-F10	3WF pump tank	15,000 g
E-F11, TK-F12	NH_3 waste evaporation	500 g
TK-F15, -16	Waste treatment	500 g
TK-F17	Tube bundle flush	500 g
TK-F18	Sump waste receiver	500 g
TK-F26	1WW receiver	12,400 g
G-Cell vessels	Organic treatment	500 g/vessel
TK-H1	HAF pump tank	12,400 g
T-H2	HA column	950 g or 6 g/L[b]
E-H4	3WB concentrator	6,870 g
TK-J1	3WB receiver	12,400 g
TK-J2	Neptunium storage	2,500 g
TK-J3	1BXF pump tank	12,400 g
T-J4	1BS column	1,200 g, 6 g/L
T-J6	1BX column	1,320 g, 6 g/L
T-J7	1C column	1,450 g
E-J8	ICU concentrator	7,100 g
TK-J21	2N feed	6 g/L[d]
T-J22	2N column	6 g/L[d]
T-J23	2P column	6 g/L[d]
TK-K1	2DF pump tank	12,400 g
T-K2	2D column	870 g
T-K3	2E column	1,450 g
E-K4	2EU concentrator	7,100 g
TK-K5, -K6	2UC receiver, sampler tank	12,400 g
TK-J5	2AF pump tank	6 g/L
T-L1, -L2, -L4, -L5 -L6, -L7, TK-L3, -L8	2nd and 3rd plutonium decontamination cycles	450 g/L (geometrically favorable design)
TK-M1, -M2	Decontamination, utility	500 g

TABLE 6-4. PUREX Process Vessels and Typical Limits. (Sheet 2 of 2)

Vessel	Function	Typical plutonium[a] limit per vessel
TK-L9, -M3, -M4, -M5, -M6	Product sampling,	450 g/L (geometrically favorable design)
N Cell vessels	PuO_2 production	450 g/L (geometrically favorable design)
(TK-N3, -N4, -N5, -N6, -N7, F-N8)	PuO_2 production	450 g/L (1 in. of cake on drum)
CA-N9, -N10 blender	PuO_2 powder blending	40 kg
TK-L11	Waste recycle	450 g/L
R Cell vessels	Solvent treatment	500 g/vessel
U Cell vessels	Acid fractioner, lab waste	500 g/vessel
TK-P1, -P2, -P3, -P4	UN storage	12,400 g
TK-P5, -P6	Waste sampling, rework	500 g
UN transport trailer	UN transport	500 g
TK-P13, -P14, -P15	HNO_3 storage	500 g
Canyon sumps	Cell drainage collection and L Cell	6 g/L (plus depth limit)
PR room sumps	PR room/vessel leakage and spill collection	450 g/L (plus depth and mass limit)
N cell sumps	Pu conversion glovebox sumps	450 g/L (plus depth and mass limit)
SG, SR, SMA, SMB, SMC, hot shop	Liquid collection	500 g
<u>Miscellaneous</u>		
Samples	Transfer to laboratory	200 g (volume or concentration)
Waste material barrels	Scrap	250 g
Burial boxes	Equipment pieces	350 g/piece (1,000 g total)
HEPA[c] filter burial box	PR Room exhaust filter disposal	200 g

[a]Based on a ^{240}Pu content of 3 wt%. The limits may be increased, with appropriate approval, for fuel with greater than 3 wt% ^{240}Pu. For example, for fuel with 12% ^{240}Pu content, the limits, with prior approval, for dissolvers TK-D3/-D4, -D5, -E6, -H1, and -F10 are increased to 14.2, 27, 20, and 18.2 kg, respectively.

[b]Limit may be exceeded with nuclear blanks in place to prevent the addition of precipitating agents.

[c]High efficiency particulate air.

[d]Based on location of equipment above geometrically unfavorable sump.

6.2.2.3 Other Products. The chemistry of other transuranics and nonvolatile FP is not well defined, though all form acid-soluble nitrates. The volatile FP are ^{85}Kr, ^{33}Xe, ^{129}I, and ^{131}I. The first two are inert and are entirely discharged via the offgas. The ^{14}C and a portion of the ^{3}H in the fuel are also released as carbon dioxide and water, respectively. The iodine radioisotopes are suspected of partially refluxing for a very short time in the dissolver tower during the initial part of the uranium metal dissolution, but quickly discharge to the tower offgas during the balance of the dissolution.(7-10) The iodines are then trapped in the silver reactor (see Section 7.4.2). An upgraded system has been installed to monitor for ^{129}I.

9413219.1352

6.2.3 Solvent Extraction Process Chemistry

The chemistry of solvent extraction, which is the key operation of the PUREX process, is extensively documented (Ref. 7, 8, and 11 through 17) The major chemical reactions involved in separation of uranium and plutonium from associated FP and each other, resulting in purified nitric acid solutions containing the desired products are given in Table 6-11.

The required separation and purification are accomplished by a series of extraction-stripping sequences conducted in pulse columns under controlled chemical conditions as indicated in the flowsheet.(12) Instrumentation and sample analyses are used to assure the process is conducted safely and efficiently.

6.2.4 Plutonium Nitrate Conversion/Calcination Process Chemistry

The major chemical adjustments and reactions in the oxalate precipitation process include H^+ ion adjustment, plutonium valence adjustment, oxalate strike/precipitation and calcination.

6.2.4.1 Plutonium Valence Adjustment. The plutonium in a solution of plutonium nitrate usually exists in the +IV valence state. Under certain conditions, such as are found in the 3BP concentrator, large quantities of +VI plutonium are produced. Laboratory studies show that most of the +VI decays to the +IV state after about 22 d. (The +III state does not exist in solution at H+ concentrations greater than 4M and when present does not significantly affect the precipitation process or increase waste losses.) The plutonium (VI) exists as the plutonyl ion PuO_2^{++}. Plutonyl oxalate is soluble in the oxalate strike solution, resulting in very high filtrate losses. It is imperative, therefore, that the plutonium (VI) be reduced to plutonium (IV) to avoid filtrate losses in the range of 4 to 5 g/L.

TABLE 6-11. Solvent Extraction Chemistry. (Sheet 1 of 2)

Process step	Chemistry	Description
HA column extraction	(1) In general, $M^{+a}_{(aq)} + aNO^-_{3(aq)} + bTBP \xrightarrow{\text{high } [NO^-_3]} M(NO_3)_a \cdot bTBP$ Where: a = cation valence b = number of TBP molecules in complex (2) $UO^{+2}_{2\,(aq)} + 2NO^-_{3(aq)} + 2TBP_{(org)} \rightarrow UO_2(NO_3)_2 \cdot 2TBP_{(org)}$ (3) $Pu^{+4}_{(aq)} + 4NO^-_{3(aq)} + 2TBP_{(org)} \rightarrow Pu(NO_3)_4 \cdot 2\ TBP_{(org)}$ (4) $NpO^{+2}_{2(aq)} + 2NO^-_3 + 2TBP_{(org)} \rightarrow NpO_2(NO_3)_2 \cdot 2TBP_{(org)}$	Extraction is accomplished by moving the aqueous feed stream and the fresh organic stream countercurrently through the pulse column cartridge plates. An excess of nitric acid in the aqueous, supplied by the backcycle waste, acts as a driving force or "salting agent," assuring essentially complete extraction.
HA column scrub	$M(NO_3)_a \cdot bTBP \xrightarrow{\text{low } [NO^-_3]} M^{+a} + aNO^-_3 + bTBP$	In the scrub section, the aqueous nitrate concentration is reduced and most of the FP previously extracted into the organic are back-extracted or stripped into the aqueous stream (the HAS). A slight refluxing of Np normally occurs just below the point where the HAF enters the HA column.
1BX column Pu partitioning	(1) $Pu(NO_3)_4 \cdot 2TBP_{(org)} \xrightarrow{\text{low } [Pu^{+4}]\,[NO^-_3]} Pu^{+4}_{(aq)} + 4NO^-_{3(aq)} + 2TBP_{(org)}$ (2) $Pu^{+4}_{(aq)} + Fe^{+2}_{(aq)} + (NH_2SO^-_3)_{(aq)} \xrightarrow{\text{high } [Fe^{+2}]\,[NH_2SO^-_3]} Pu^{+3} + Fe^{+3}_{(aq)} + (NH_2SO^-_3)$ (3) $H^+_{(aq)} + NO^-_{3(aq)} + TBP_{(org)} \rightarrow HNO_3 \cdot TBP_{(org)}$	Partitioning is accomplished by a combination of low nitrate and Pu(IV) concentrations in the aqueous stream coupled with conversion of Pu(IV) tn Pu(III) due to an excess of Fe(II). The aqueous stream is scrubbed with fresh solvent in the 1BS column to recycle stripped U along with 6 to 10% of the Pu
1C column	(1) $UO_2(NO_3)_2 \cdot 2TBP_{(org)} \xrightarrow{\text{low } [NO^-_3]} UO^{+2}_{2\,(aq)} + 2NO^-_{3(aq)} + 2TBP_{(org)}$	The aqueous strip has a very low nitrate concentration
2AF (TK-J5) reoxidation	(1) $NH_2SO^-_3 + NO^-_2 \rightarrow N_2 + SO^{-2}_4 + H_2O$ (2) $6Pu^{+3} + 2NO^-_2 + 8H^+ \rightarrow 6Pu^{+4} + N_2 + 4H_2O$	So that Pu can be reextracted, Pu(III) is oxidized to Pu(IV) with $NaNO_2$ in the second Pu cycle feed tank
2A column	Extraction and scrub	Similar to HA column

Loss of radioactivity, in the event of a coil failure, is minimized by: an interlock system that maintains pressure on the coil at all times, periodic coil leak tests, and continuous monitoring of the effluents and automatic diversion if radioactivity is detected.

6.4.1.4 Operational Control. The standard operating procedures (SOP) for the dissolvers explicitly specify each action or operating step to be performed from the time the dissolver is charged with fuel and the lid replaced until it has been rinsed and prepared for the next charge. Supplementing the SOP are dissolver operating data sheets which must be filled out by the operator. The data sheets are, basically, check sheets with spaces for recording the time, initials of the operator performing each step, and other pertinent physical data (such as volumes transferred and temperature).

6.4.1.4.1 Fuel Decladding. Nuclear criticality prevention during the decladding operations is maintained primarily by strict supervisory control of the chemical addition and solution transfer control system (also known as the sequence control and the dissolver sequence selector). The accumulation of an unsafe mass of plutonium solids is prevented by specifying the amount of excess decladding solution to be used and the length of the digestion period, and by requiring that the solids be allowed to settle to the bottom of the dissolver before the cladding waste is transferred out of the dissolver.

Hydrogen evolution during the decladding step is suppressed by the nitrate ion present in the decladding solution: The AFAN decladding solution is procured as a stock solution; 11M in fluoride and 1M in nitrate concentration. The stock solution is sampled when received, but not used until the analyses indicate the material meets the required purchase specifications. The amounts of AFAN stock solution and dilution water required for the decladding step are specified in the procedure.

The concentration of unreacted or residual hydrogen in the DOG is continuously measured and maintained at a safe level (less than 2.0%) by adjusting the dissolver air in-bleed rate, the steam sparger rate, and, finally, the steam flow to the dissolver coil.

The ammonia concentration in the vapor space of the dissolver is above the lower flammability limit in dry air, but safety is ensured by the temperature of the solution and steam sparging, and the consequent presence of water vapor. Virtually all of the ammonia is removed from the DOG in the condenser and ammonia scrubber to reduce the concentration in the offgas to less than the lower flammability limit. The continuous ammonia analysis provides verification of proper operation of the condenser and ammonia scrubber.

6.4.1.4.2 Metathesis. Nuclear criticality prevention during this step is maintained by strict supervisory control of the dissolver sequence selector. The accumulation of an unsafe mass of plutonium solids is prevented by requiring a period of quiescence to allow the solids to settle before the metathesis solution is transferred from the dissolver.

6.4.1.4.3 Fuel Dissolution, Storage and Sampling, and Feed Preparation. The mass of plutonium dissolved in a single dissolution cut is limited. This is accomplished by operating procedure, which specifies the amount of nitric acid to be added to the dissolver and the final or end-point concentration (determined by SG measurement) of the dissolver solution. Precipitation in the dissolvers is prevented by designating a maximum end-point SG (calculated to ensure a final nitric acid concentration of at least 0.2M) and by supervisory control of solution transfers by means of the dissolver sequence selector. Adequacy of control of the uranium, plutonium, and nitric acid concentrations of the metal solution is verified by analysis of the samples taken in the accountability measurement tank (TK-D5).

Plutonium mass limits for the solution storage vessels are not exceeded if dissolver operating limits and procedures are followed. Plutonium precipitation in the solution storage, sampling, and feed preparation tanks is prevented by the use of "nuclear blanks" and the dissolver sequence selector. Restoration of a nuclear-blanked system is permitted only after review and approval by both engineering and operations management.

The procedure for transfer of plutonium rework solutions from TK-L11 in the PR room to the feed preparation tank (TK-E6) requires supervisory approval for all transfers. The supervisor must review the plutonium concentration in both TK-E6 and TK-L11, and specify the composition of the solution to be used as the motive fluid for the transfer jet. If cadmium nitrate solution is used, it must be the proper concentration or an interlock will prevent the pump from operating. If an acid solution is used, the acid addition system must be unlocked and the above interlock bypassed. These actions require management approval.

Control of the concentration of hydrogen generated by radiolysis in the solution storage tanks to a safe concentration is assured by a combination of air in-leakage and air purging through the instrument air dip tube lines.

6.4.2 Solvent Extraction

The detailed chemical flowsheets used for solvent extraction processing in the PUREX Plant are discussed in References 11, 12, and 15 through 17. Flow sketches are shown in Section 6.1.1. This section discusses the solvent-extraction systems.

6.4.2.1 Functional Description.

6.4.2.1.1 Codecontamination System. The codecontamination system separates the uranium, plutonium, and neptunium from the bulk of the radioactive FP and other contaminants (Fig. 6-16).

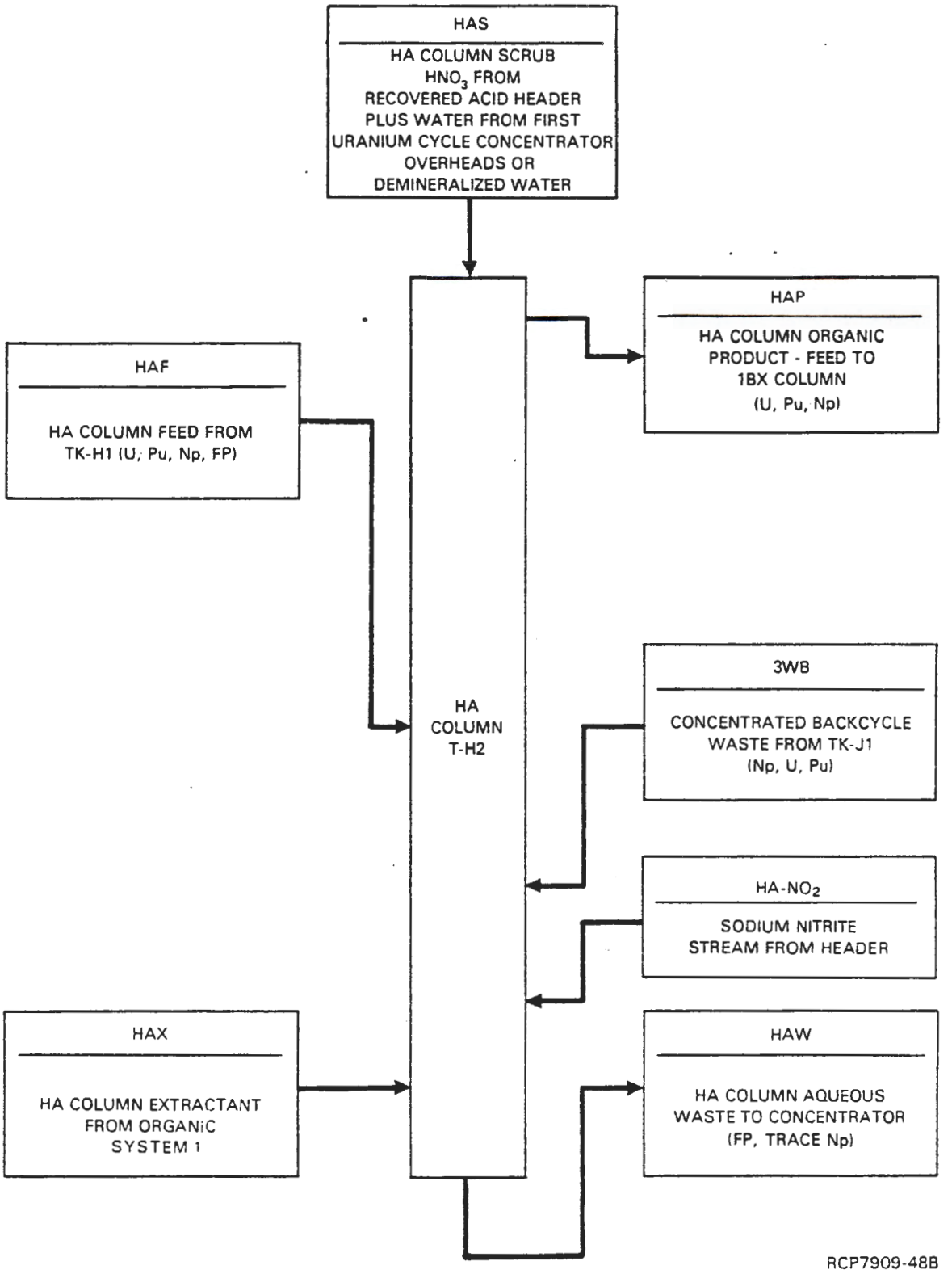

FIGURE 6-16. Codecontamination Flowsheet.

The aqueous feed solution is received in batches in the HA feed tank and, from there, is pumped continuously to the HA column. A sodium nitrite stream is added to the lower section of the column to oxidize neptunium to the extractable +6 valence. The uranium, plutonium, neptunium, and a small fraction (less than 0.1%) of the FP are extracted into the countercurrently flowing organic solvent in the lower, extraction section of the HA column. Most of the extracted FP are scrubbed back out of the organic solvent in the upper, or scrub portion of the column, and the solvent, containing the uranium, plutonium, and neptunium products, overflows out the top of the column to the partition column feed tank. The aqueous waste stream, containing FP, americium, nonradioactive chemical contaminants, and a trace of the product elements, flows out of the bottom of the HA column to a receiver tank in the waste concentration and treatment system. The aqueous waste stream contains, typically, less than 0.05% of the uranium and plutonium, about 10% of the neptunium, greater than 99.99% of the nonvolatile FP and americium in the feed stream.

6.4.2.1.2 Partitioning System. The partitioning system separates plutonium from the uranium product solution. Flow sheets of the partitioning system are presented in Figures 6-17 and 6-18.

The organic product solution overflows from the HA column into the partition (1BX) column feed tank and is mixed with the organic waste streams from the second and third plutonium cycles and the 1BS column. This organic solution is pumped into the bottom of the 1BX column as the 1BXF stream where it contacts a countercurrently flowing aqueous-reducing solution containing nitric acid, ferrous sulfamate, and sulfamic acid. The plutonium is differentially back-extracted into the aqueous phase, where it is reduced to the nearly inextractable plutonium (III) valence and flows from the bottom of the column as the 1BXP product stream. This aqueous product solution enters the 1BS column, where it is scrubbed with fresh organic solvent to remove residual uranium that is carried over from the 1BX column. The scrubbed aqueous plutonium (1BP) solution is then routed to the second plutonium cycle feed (2AF) tank for additional decontamination from uranium, neptunium, and FP.

The organic solution from the 1BX column, containing uranium, neptunium, and less than 0.5% of plutonium, overflows directly to the bottom of the 1C column. In the 1C column, the uranium, neptunium, and plutonium are back-extracted, or stripped, into a countercurrent aqueous solution. The organic raffinate from the 1C column is routed to solvent treatment system 1. The aqueous product solution enters the tower of the 1CU concentrator, where the organic is steam stripped before the aqueous is concentrated by a factor of about seven. The concentrated product (IUC) stream overflows to the final uranium cycle feed tank for final decontamination.

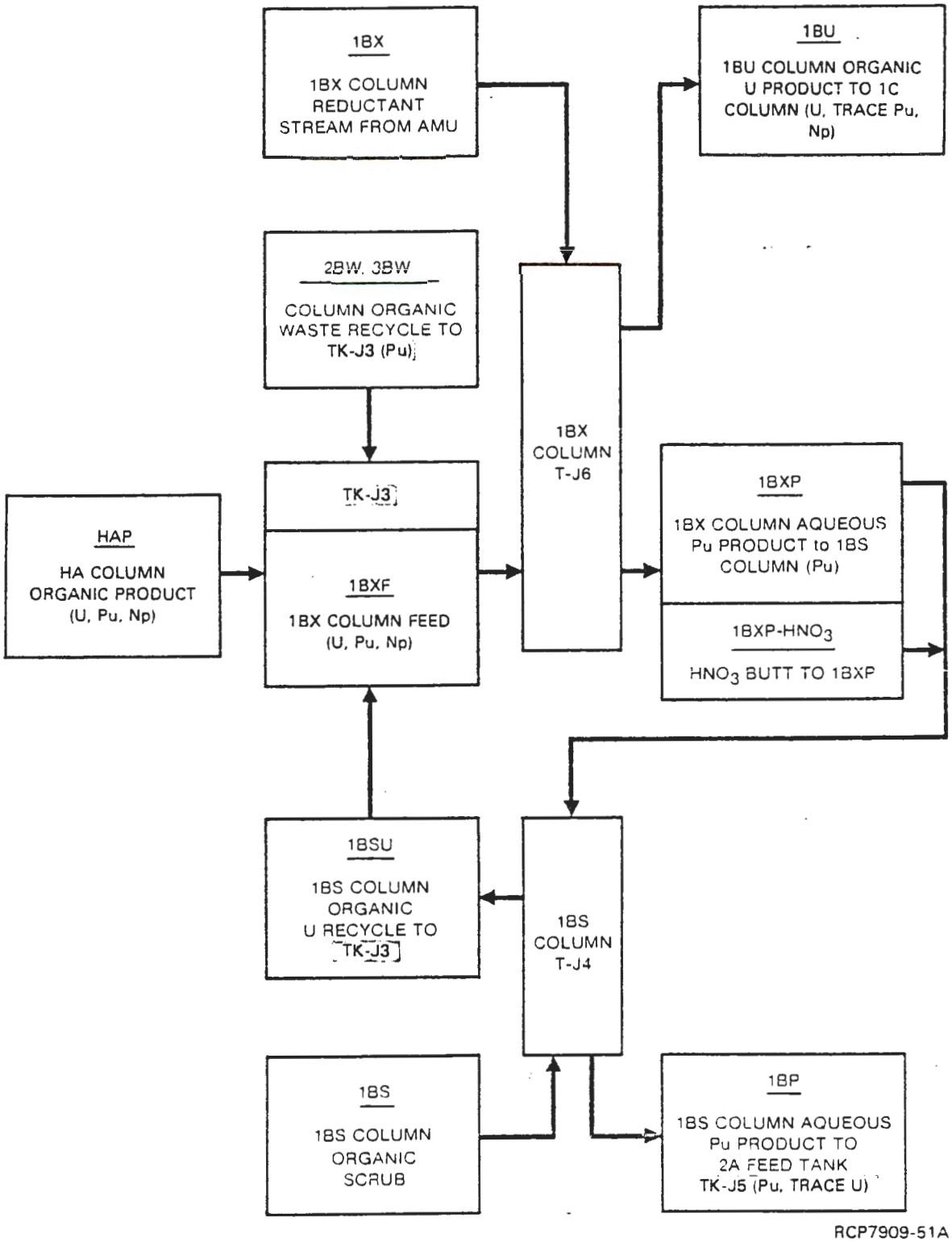

FIGURE 6-17. Partitioning Flowsheet--Uranium, Plutonium, Neptunium.

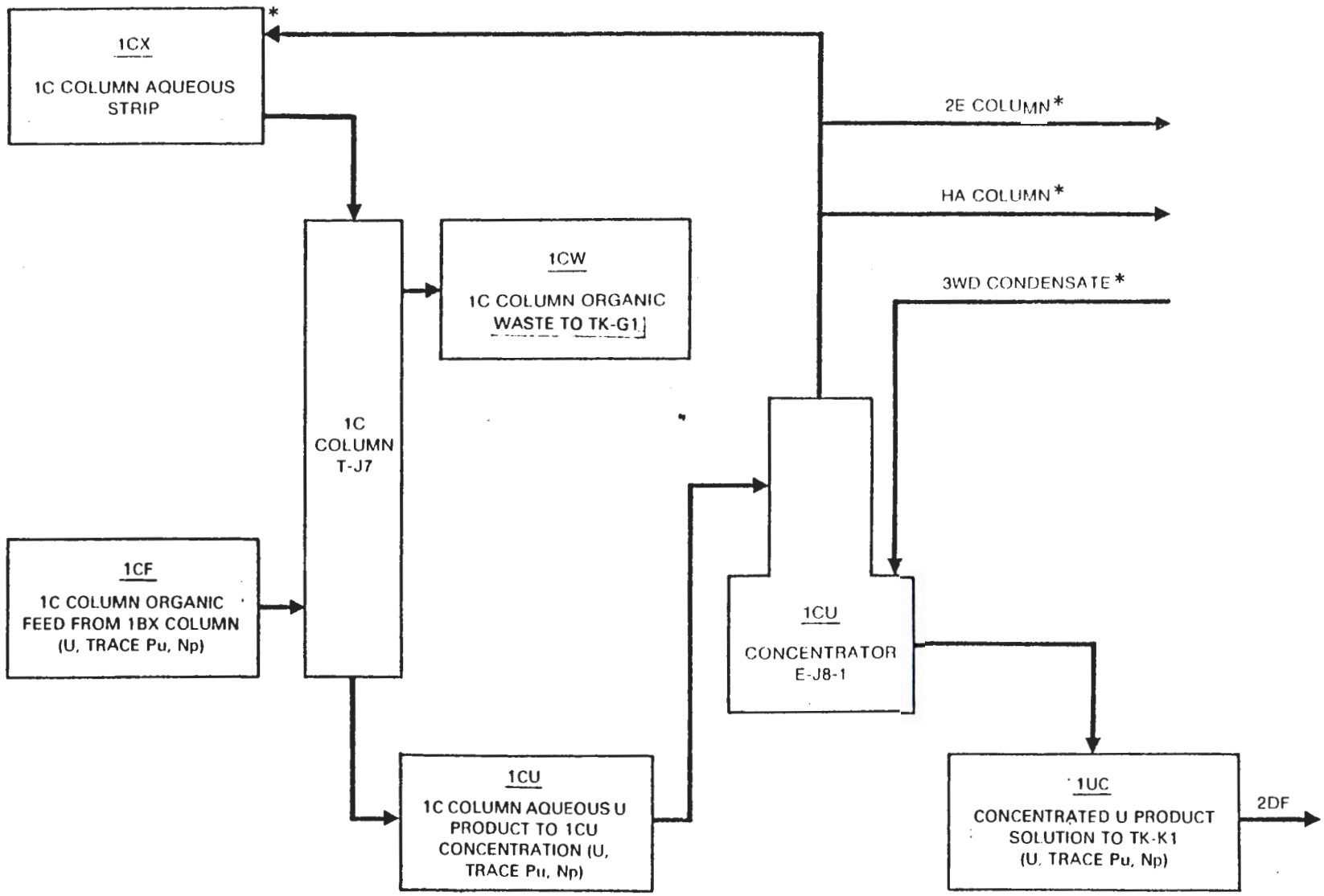

FIGURE 6-18. Partitioning Flowsheet--Uranium.

TABLE 6-19. Solvent Extraction--Off-Standard Conditions. (Sheet 1 of 9)

Off-standard condition	How detected	Likely cause	Detection of cause	Remedy
High U or Pu loss to HAW	1. By routine analysis of combined concentrated aqueous waste (TK-F15) 2. Specifically by analysis of HAW sample 3. Specifically by increase in static pressure of column (indication of high U loss) 4. Decrease in HAP SG	1. Flow rates: a. Low HAX[a] b. High HAF[a] c. High HAW d. Low HAS; low salting strength 2. Stream compositions: a. Low (TBP) concentration b. High U concentration in HAF c. Low acid concentrations (HAS, HAF, 3WB) 3. Flooding of HA column 4. Pulse frequency or amplitude off optimum conditions: a. Frequency b. Air in pulse leg	1. Rates: a. Flow recorder on HAX; low HAP (organic) SG b. Flow recorder on HAF (cross checked by tank volume readings of TK-H1) c. Flow recorder on 3WB d. Flow recorders on HAS-H_2O and HAS-HNO_3 2. Stream compositions: a. Instrument SG: high SG indicates high U concentration in column b. Analysis of samples, HNO_3 monitors 3. Flooding: a. Increase in static pressure readings b. Interface variations 4. Pulse: frequency check	1. Ratio: adjust flow to proper ratios 2. Stream compositions: a. Butt into specifications b. Adjust flow rates to compensate: o If low TBP concentration exists, raise HAX rate o If high U concentration exists, lower HAF rate or increase HAX rate 3. Flooding: a. Adjust frequency b. Decrease flow rates 4. Pulse: adjust frequency
High FP content in HAP	1. Continuously by gamma radiation monitor on HAP stream 2. Periodically by analysis of HAP for gamma activity	1. Flow rates: a. Low HAS rate (low salt-strength) b. Low HAF rate[b] c. High HAX rate[b] 2. Stream compositions: a. High HNO_3 concentration in HAS b. High gamma activity in HAF (due to lack of fuel cooling time) 3. Flooding of HA column 4. Pulse frequency or amplitude off optimum conditions: a. Frequency b. Air in pulse leg	1. Flow rates: a. Flow recorders on HAS-H_2O and HAS HNO_3 b. Flow recorder on HAF c. Flow recorder on HAX 2. Stream compositions: a. HAS continuous acidity monitor b. Analyses of HAF for gamma activity 3. Flooding: a. Increase in static-pressure readings b. Interface/DP[c] variations 4. Pulse: frequency check	1. Rates: adjust flows to proper values 2. Stream compositions: a. Adjust HAS HNO_3 concentration b. If high gamma in HAF, increase HAS flow rate 3. Flooding: a. Adjust frequency b. Decrease flow rates 4. Pulse: adjust frequency
High neptunium loss to HAW	1. Specially by analysis of HAW for neptunuim	1. Low HA-NO_2 flow 2. Low HAX flow	1. Flow recorder on HA-NO_2 2. Flow recorder on HAX	1. Increase HA-NO_2 flow to proper value. 2. Increase HAX flow to proper value.

TABLE 6-19. Solvent Extraction--Off-Standard Conditions. (Sheet 2 of 9)

Off-standard condition	How detected	Likely cause	Detection of cause	Remedy
High Pu loss in 1BU stream (resulting in Pu contamination in U product)	1. Specifically by analysis of 2DF for Pu 2. Routinely by analysis of 1CU for Pu 3. 1BXP, 1BX column neutron monitors 4. 1K-J1 neutron monitor	1. Flow rates: a. Low 1BX b. High 1BXF 2. Stream compositions: low reducing agent concentration ($1BX\text{-}Fe^{++}$, $NH_2SO_3^-$) 3. Flooding of 1BX column 4. Low pulse frequency 5. High nitrite in 1BXF	1. Rates: a. Flow recorder on 1BX (cross checked by tank volume readings of TK-209 and -210) b. Flow recorder on 1BXF stream 2. Analysis of sample from TK-209 or -210 3. Flooding: a. Decrease in static pressure reading b. Interface and/or 1BX flow variation 4. Pulse: frequency check 5. Nitrite analysis of TK-J3	1. Rates: adjust flows to proper values 2. Restore reducing agent concentration 3. Flooding: a. Adjust frequency b. Decrease flow rates 4. Pulse: adjust frequency 5. Add sulfamic acid to TK-J3
High U in 1BP stream	1. Analysis of 1BP stream for U 2. Very high U in 1BP may be indicated by increase in static pressure of 1BS column	1. Flow rates: a. Low 1BS rate b. High 1BX rate 2. Stream compositions, low nitric acid concentration in 1BXP 3. Flooding of 1BS column 4. Off-standard pulse conditions: a. Frequency b. Air in pulse leg	1. Rates: a. Flow recorder on 1BS b. Flow recorder on 1BX (cross checked by tank volume readings of TK-209 and -210) 2. Analysis of 1BXP 3. Flooding: a. Decrease in static pressure readings b. Interface readings and/or 1BP valve loading variations 4. Pulse: frequency check	1. Rates: adjust flows to proper ratios 2. If HNO_3 concentration of 1BXP is low, increase flow rate of $1BXP\text{-}HNO_3$ (nitric butt to 1BXP) 3. Flooding: a. Adjust frequency b. Decrease flow rates 4. Pulse: adjust frequency

Preparation and use of the proper motive fluid for the transfer jet is controlled administratively and using the cadmium monitor on the makeup tank, if cadmium nitrate solution is used.

The equipment in the PR room is geometrically favorable for 450 g/L of plutonium. The major potential hazard in the PR room are the sumps discussed in Section 6.5.3.

Miscellaneous plutonium-bearing solutions (flush solutions, sump solution, and off-standard product solution) are transferred from TK-L11 to the first cycle feed makeup tank (TK-E6) for rework through solvent extraction. These solutions typically range from less than 1 to about 350 g/L plutonium concentration.

Direct transfer of the more concentrated solutions into the geometrically unfavorable TK-E6 could cause a nuclear criticality excursion if a single error or equipment malfunction were to occur. It is, therefore, necessary that the rework solution be diluted to or poisoned to the equivalent of an always-safe concentration prior to leaving the geometrically favorable equipment.

The choice of motive fluid for TK-L11 to TK-E6 transfers is determined by plutonium concentration obtained from sample analysis. Cadmium nitrate, a soluble neutron poison, is added to the jet motive fluid for reworking more concentrated plutonium solutions. Controls on motive fluid plus plutonium concentration also ensure a safe concentration in the sump in the event of a line leak.

The transfer pump for motive fluid is interlocked to the two agitators in TK-E6 to preclude plutonium transfers into an insufficiently agitated solution. In addition, the liquid level measurement of solution in TK-E6 is interlocked to the agitators. Consequently, at low solution level, transfers are prevented.

Finally, those transfers requiring the use of cadmium nitrate are interlocked to a neutron detector which measures the cadmium concentration in the AMU tank. If the solution is below a set concentration of cadmium, the interlock prevents actuation of the pump.

6.4.5.3 Plutonium Oxide Rework Facility.

6.4.5.3.1 Functional Description. The function of the plutonium oxide rework facility, located in N cell, is to dissolve out-of-specification plutonium oxide, plutonium oxalate spilled from the vacuum drum filter, glovebox sweepings, and other miscellaneous solid scrap material.

The material to be processed is dissolved in a boiling mixture of nitric acid and sodium fluoride (or straight nitric acid) in a circulating batch dissolver. Following dissolution, aluminum nitrate is added to complex the fluoride ion, the solution is filtered successively through two

separate filters, sampled, then transferred to TK-L11 in the PR room for rework through the solvent extraction system. The facility is designed to process about 3 kg/d.

6.4.5.3.2 Major Components. The plutonium oxide rework facility is comprised of two dissolvers and offgas condensers, filters, transfer and receiver tanks, a vacuum trap, a transfer pump, and a sampler in the N6 glovebox in N cell. In addition, a two-barrel rework solution storage tank, TK-N53, is located in the pipe chase adjacent to N cell.

The dissolver vessels (TK-N50, -N51) are fabricated from 6-in-ID Pyrex glass pipe with Kynar* plastic lids. The dissolver vessels are equipped with axial draft tubes and air supply lines for airlift circulation and agitation of the contents, and replaceable steam coils.

The system has three filters, one rated at 5 and two at 1 . The first (5) filter is located in the transfer line between the rework transfer tank, TK-N54, and the rework receiver tank, TK-N52. The second and third (1) filters are in parallel, located between the transfer pump and the rework storage tank, TK-N53.

The sampler, basically a three-way valve with a connection to take a sample bottle, is located in the line between the circulation pump and the rework storage tank.

The rework receiver tank, rework transfer tank and vacuum trap, TK-N52, -N54 and VT-N57, respectively, are fabricated from 6-in.-ID Pyrex glass pipe with Kynar plastic end flanges. Each glass vessel in the rework facility has a metal screen around it, thus reducing the potential hazard to the operators from breakage.

The rework storage tank, TK-N53, is a two-barrel vessel fabricated from 6-in. Schedule 80, stainless steel pipe.

6.4.5.3.3 Safety Criteria and Assurance. The plutonium oxide rework facility occupies a glovebox in N cell immediately adjacent to the oxide production gloveboxes; the general criteria and engineered features described for this facility (Section 6.4.3.3) also apply to the rework facility. A potential hazard resulting from processing plutonium solutions from the rework facility that cannot be eliminated completedly by engineered features is the transfer and gradual accumulation of plutonium solids in a nongeometrically favorable vessel in the solvent extraction or waste treatment system. However, in-line filters along with analysis of samples does provide the means to minimize solids transfers. Also, neutron monitors are placed near the bottom of TK-E6 and TK-F7 to warn of solids accumulation.

---

*Pennwalt Corporation trade name for polyvinylidene fluoride plastic resin.

6.4.5.3.4 Operational Control The plutonium oxide rework process is, basically, a single-step, batch process, and requires direct operational control. The area of primary concern, other than personnel radiation and contamination safety, is prevention of solids recycle to the solvent-extraction system. The combination of procedural control, verification by sample analyses, and backup detection of accumulation downstream will reduce the risk of accumulation to an acceptable level.

6.4.5.4 Neptunium Recovery System.

6.4.5.4.1 Functional Description Neptunium is separated from the uranium product in the final uranium system 2D column, remaining with the 2DW stream, which is collected and concentrated in the backcycle waste system along with other intermediate-cycle aqueous waste streams. The function of the neptunium recovery system is to remove the neptunium from the backcycle waste system and concentrate and decontaminate the resulting neptunium solution sufficiently so that it can be stored pending the startup of the final purification process in Q-cell (FY 87). The accumulation, decontamination, and concentration of neptunium are accomplished in distinct process phases in the same equipment. The flowchart for the neptunium recovery and decontamination system is shown in Figure 6-48. In Phase I, the accumulation phase, the concentrated waste (3WB) solution is divided into two streams; the larger portion (60%) is routed to the HA column, and the remainder to the neptunium recovery feed tank (TK-J21). This aqueous solution is then pumped to the 2N column (T-J22). In the 2N column, reducing agents (ferrous sulfamate and hydrazine) are added. Neptunium and uranium are extracted into the organic 2NX stream. Most of the plutonium and FPs remain in the aqueous phase and return to the backcycle waste system (TK-F10). The organic stream overflows to the 2P column (T-J23), where neptunium is stripped from the organic phase by a dilute nitric acid solution. The uranium-bearing organic is sent to the partition cycle feed tank (TK-J3). The aqueous neptunium solution (2PN) is then recycled to TK-J21. Phase I is continued until 2,000 g of neptunium have been accumulated in the process.

In Phase II, the neptunium solution is repeatedly recycled through the system with the 3WB flow to TK-J21 diverted to the HA column and replaced by a lower volume (57 wt%) nitric acid stream. This recycle operation continues to decrease the associated concentrations of uranium, plutonium, and FPs. Phase II operation is concluded when the recycled product solution contains < 6 g U/L and a calculated plutonium content of < 500 g total. The uranium limit is a process requirement to facilitate the final purification step, but the plutonium limit is for criticality prevention in downstream process equipment and must be observed.

Phase III purges the neptunium from the recovery system by sending the 2PN to TK-J2 for concentration and temporary storage. A 30 wt% nitric acid stream is fed to TK-J21 and pumped to the 2N column. Recycle of 2PN to TK-J21 is discontinued, and flow rates of all streams are reduced. The 2PN stream is transferred to TK-J2 for concentration and interim storage.

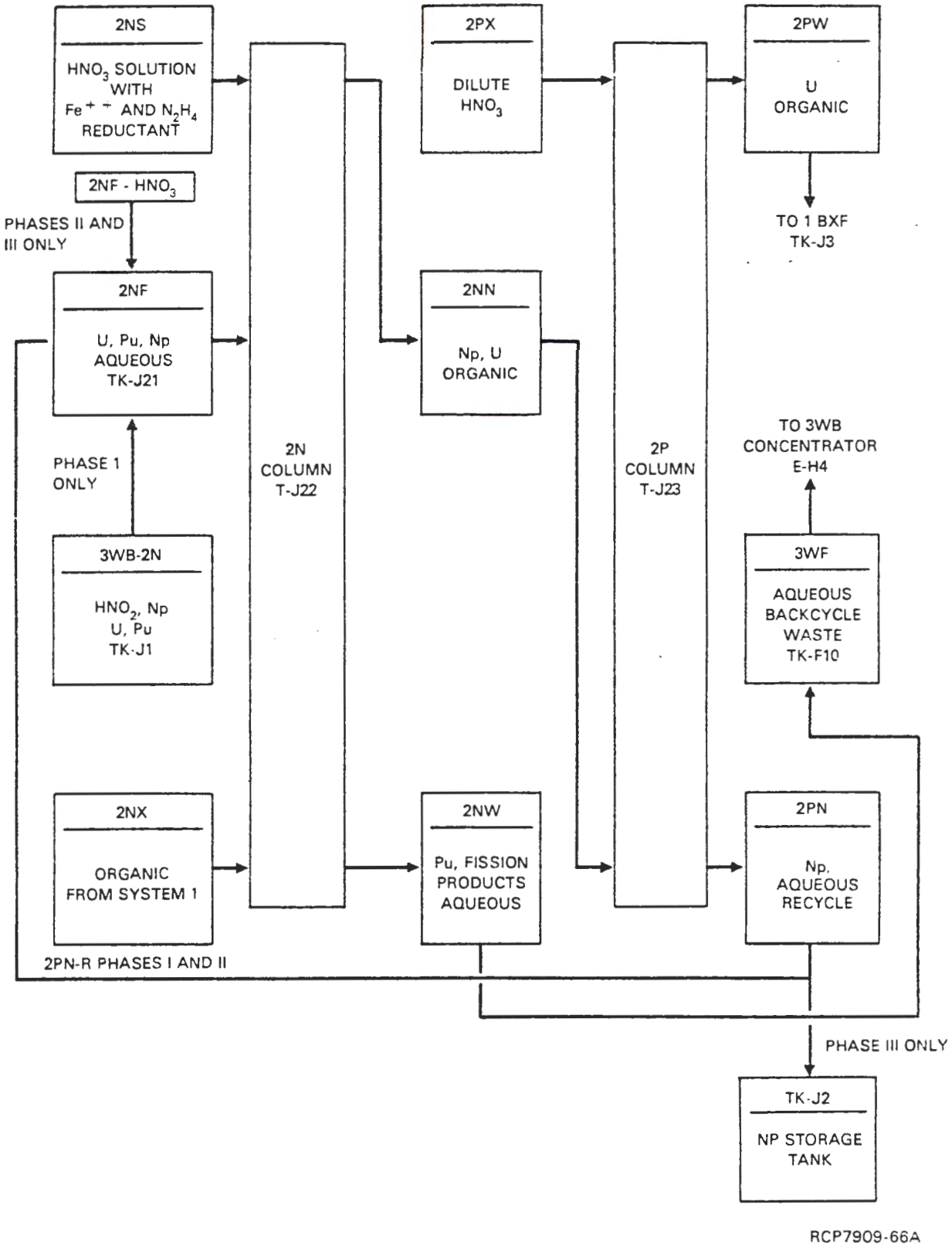

FIGURE 6-48. Neptunium Recovery System--Flowchart--J Cell Package.

When ~90% of the neptunium has been stripped from the recovery system, the system may be either returned to Phase I operations or shut down.

6.4.5.4.2 Major Components The major process vessels in the neptunium recovery system (J Cell package) are the 2N feed tank (TK-J21), the 2N column (T-J22), the 2P column (T-J23), and the neptunium storage tank (TK-J2). Pertinent physical data for the equipment comprising the Neptunium recovery system is included in Table 6-1.

The 2N feed tank (TK-J21) is an annular tank with a centrally located "standpipe" pump well (Fig. 6-49). An internal, 7-in-thick, annular, concrete plug installed immediately adjacent to the solution annulus is provided to reduce the nuclear reactivity of the vessel. A deep-well turbine pump is installed in the 5-in-diameter central pump well. The well is connected to the solution annulus by 2-in. piping at the top and bottom of the vessel. A steam coil, extending circumferentially 200° around the tank, and an air sparge ring, extending 330° around the tank, are installed at the bottom of the solution annulus for heating and agitation, respectively. Both the pump and the tank are remotely serviceable. If the tank is overfilled, the solution flows by gravity to the 3WB receiver/pump tank (TK-J1).

The 2N column (T-J22; Fig. 6-50) is a geometrically favorable extraction/scrubbing column with center feed. Roughly 31 feet of the column length (37 feet) is devoted to extraction and scrubbing and 6 feet to phase separation. The extraction section is 20 feet long, extendable to 26 feet by the use of an alternate feed ring. Phase separation at the bottom of the column is achieved in a geometrically favorable, beavertail disengaging section. Phase separation at the top of the column is achieved in an annular disengaging section consisting of an outer 3-in. solution annulus of 3ft-3in. OD by 14-in. high. A concrete neutron moderator fills the void between the inside of the annulus and the center column extension. The annular section has a hollow center to allow the remote removal and replacement of the column cartridge. In addition, the interface float and all associated control equipment are remotely serviceable.

The 2P column (T-J23; Fig. 6-51) is a simple stripping column 26 feet long with 20 feet available for stripping. The 2P column is similar in design to the 2N column, in that a beavertail disengaging section is employed on the bottom for phase separation and an annular disengaging section is used on the top. In addition to permitting the remote servicing of the cartridge in the 2P column, the top annular disengaging section also provides a configuration suitable for a top interface float in a geometrically favorable disengaging section.

Pertinent information regarding the two columns is included in tables 6-1 and 6-15.

The neptunium storage tank (TK-J2) is a cylindrical tank (Fig. 6-52) which will be used for interim storage and concentration of the neptunium product solution. The solution in the tank will be heated to around 65°C

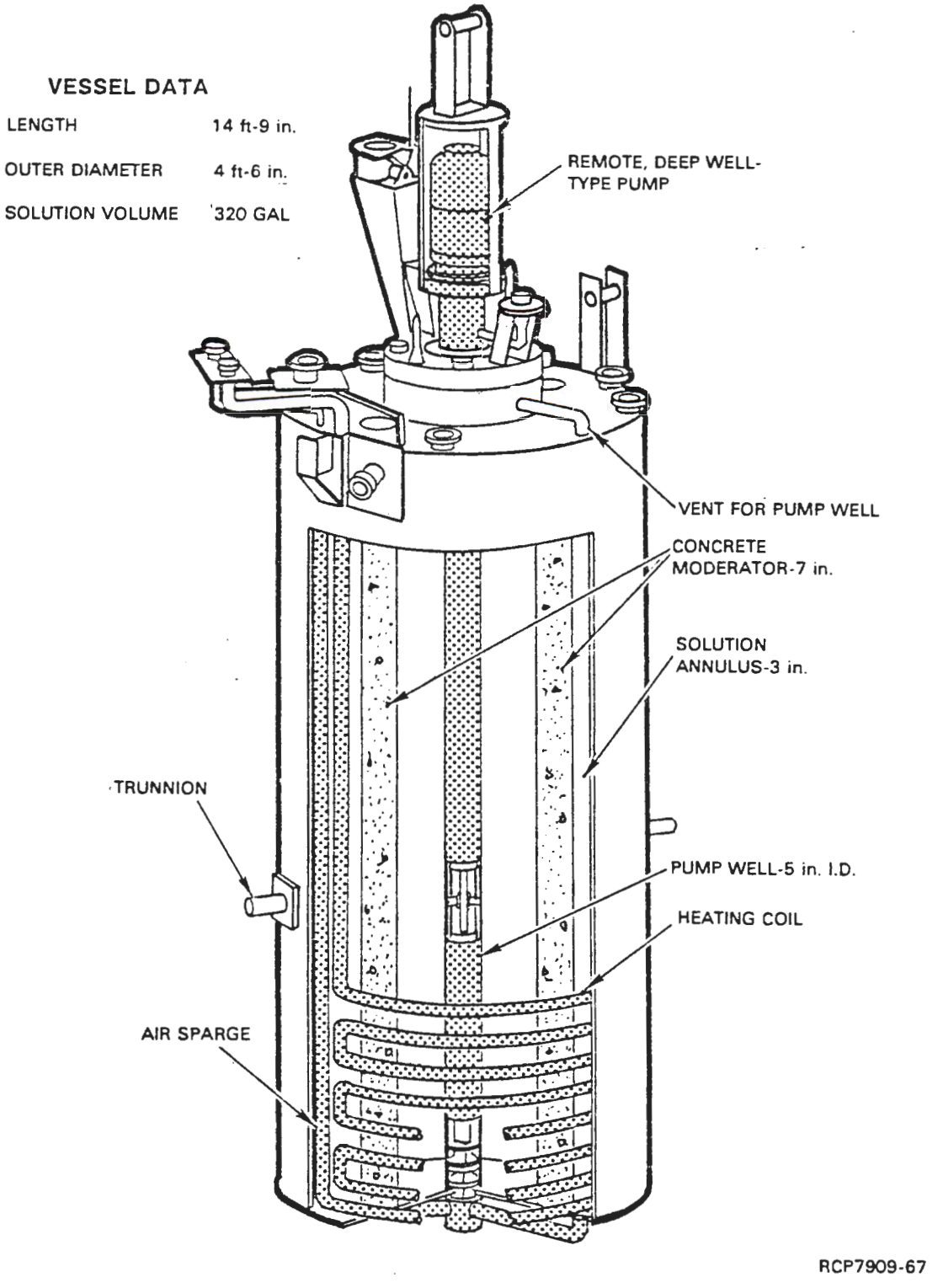

FIGURE 6-49. 2N Feed Tank (TK-J21).

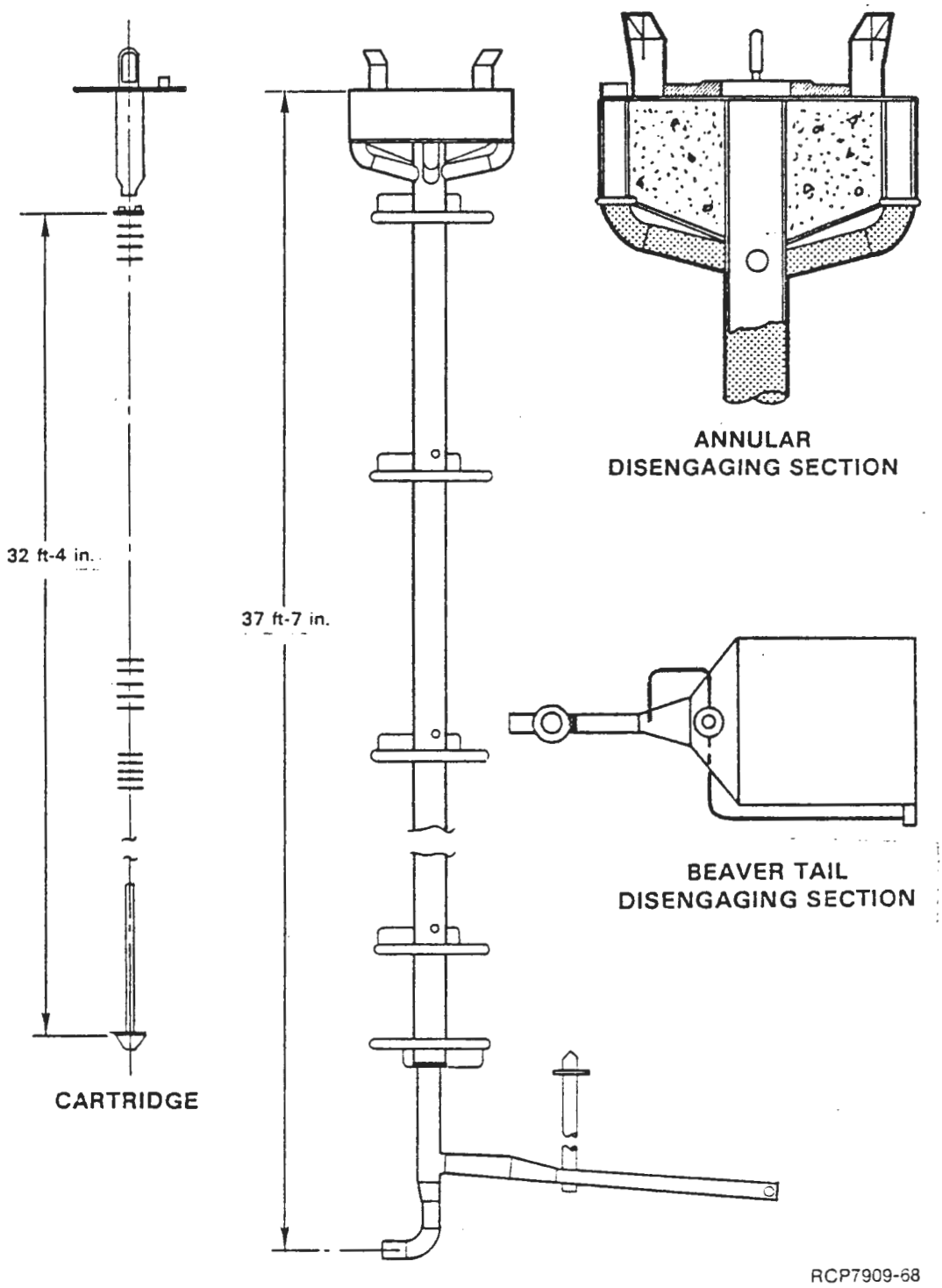

FIGURE 6-50. 2N Column.

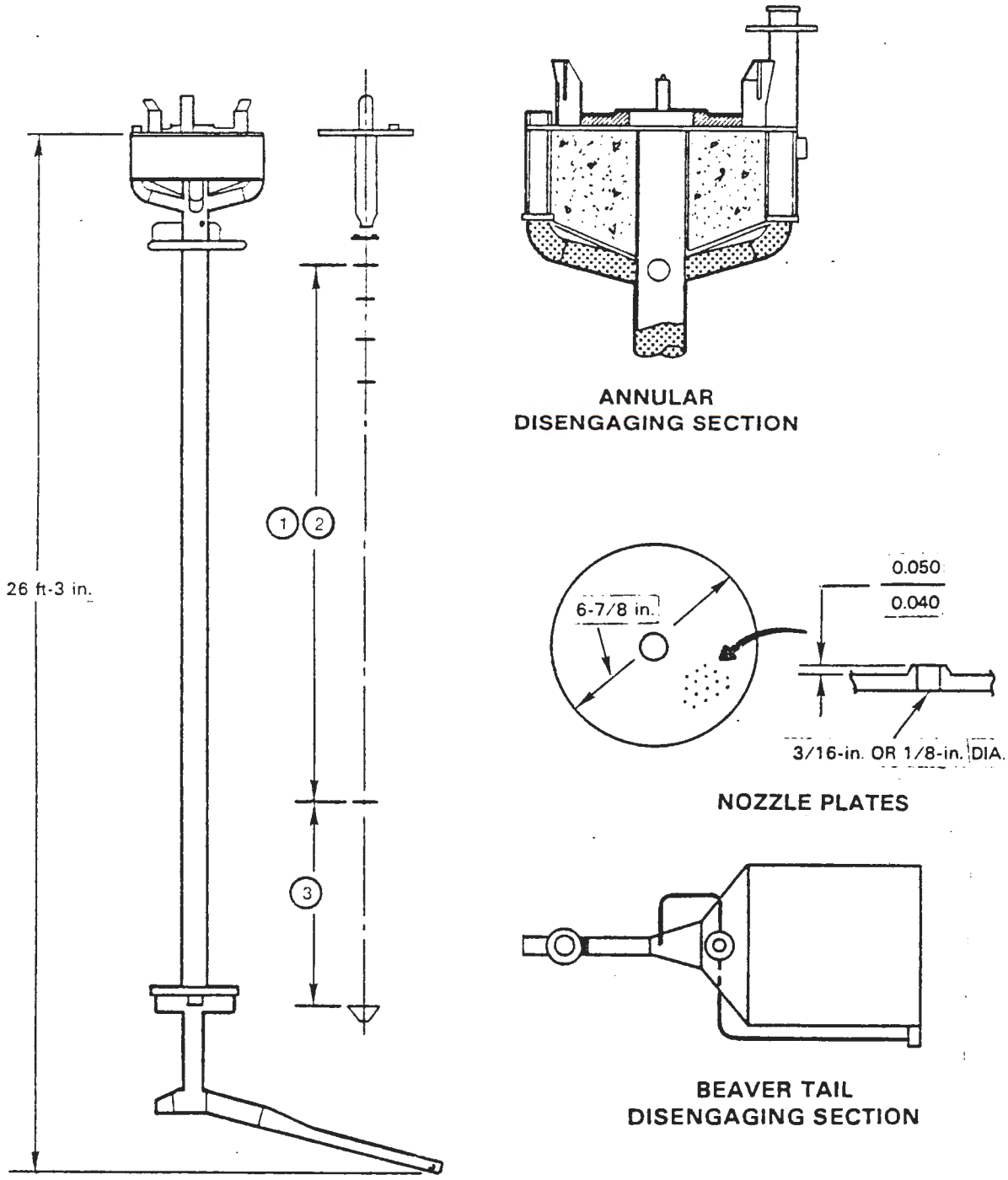

1. 16 SIEVE PLATES-23% FREE AREA
POLYETHYLENE HOT DIP COATING
12-in. SPACING

2. 39 NOZZLE PLATES-23% FREE AREA

3. 18 NOZZLE PLATES-10% FREE AREA
ALL NOZZLES POINT UP-4-in. SPACING

RCP7909-69

FIGURE 6-51. 2P Column.

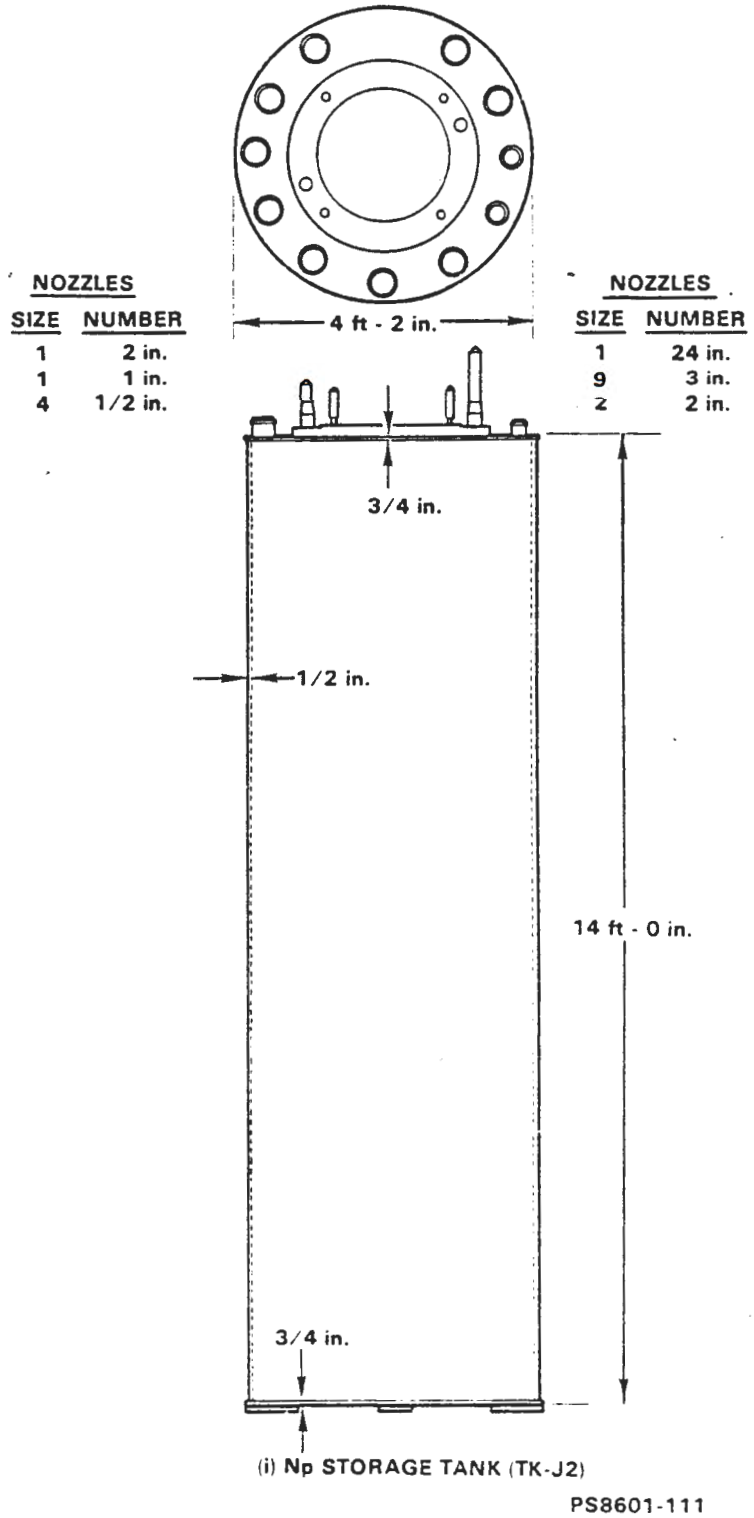

FIGURE 6-52. Neptunium Storage Tank.

by means of a small steam coil. When the neptunium purification system in Q cell is reactivated, the contents of the tank will be emptied to the neptunium purification process tank and it will be bypassed during normal operations.

6.4.5.4.3 Safety Criteria and Assurance The process hazard analysis for the neptunium recovery is given in Table 6-27.

- Nuclear Criticality Prevention

  The neptunium Recovery Cycle (J Cell Package) equipment is of geometrically favorable design for criticality prevention. Tank J-21 has an annular solution space moderated by concrete; hence, it is geometrically safe for solutions with plutonium concentrations up to 40 g/L. The columns (J-22 and J-23) are the same size as the Second Plutonium Cycle columns. The J Cell vessels are, however, restricted to containment of solutions with a maximum plutonium concentration of 6 g/L, as the vessels are located over the geometrically unfavorable J Cell sump and the SJ2 deep sump.

  Plutonium leaving the J Cell package either returns to the Backcycle Waste System or is transferred to the neptunium storage tank (TK-J2) for interim storage. TK-J2, a cylindrical tank, has a plutonium mass limit of 2,500 g.

- Containment and Personnel Exposure

  Few process hazards exist during the J Cell operation. Operating personnel do not normally come in contact with equipment except in the control room, so there is little danger of personnel injury or exposure. A suckback from the canyon equipment to the P&O Gallery is prevented by careful operation of valves or other equipment in the P&O gallery, especially when removing air from the pulse leg prior to startup.

- Solvent Flammability

  The conditions which contribute to a potential solvent fire and their mitigating factors are discussed in Section 6.4.2.3. The organic-containing cells are equipped with dual heat detectors and an automatically actuated foam fire suppression system.

- Solvent Nitration

  The conditions which may cause vigorous exothermic reactions between nitric acid or heavy metal nitrates and solvent mixtures are discussed in Section 6.4.2.3.4. The J Cell process equipment is kept at temperatures of below 70° C, well below 135 °C, the lowest temperature at which such reactions have been observed to occur.

  In addition, close control of the 2N column interface is maintained during phase transition periods to prevent the loss of organic to TK-J2.

TABLE 6-27 Process Hazard Analysis--Neptunium Recovery.

System or Subsystem	Energy (hazard)	Unwanted Energy flow (incident)	Consequence (immediate and/or secondary)	Barriers (design, administrative, safety devices, etc.
Extraction/scrub columns T-J22 and/or T-J23	Solvent	Ignition on floor	Equipment damage	Control of materials in sumps; low solvent inventory; foam system, water sprays in ventilation tunnels; few sources of ignition
J-cell sumps	Pu concentration >6 g/L	Transfer to non-geometrically safe sumps	One level of criticality prevention compromised	Streams are sampled
TK-J2	Pu	Accumulation of >2,500 g Pu	One level of criticality prevention compromised	Sampling; procedural controls
P&O gallery	Fission products	Suckback of vessel contents into P&O gallery	Personnel contamination	Correct startup & shutdown procedures
TK-J2	Nitrated solvent	Red-oil explosion	Equipment damage	Proper control of column interface (to prevent carry-over of organic) and temperature controls on simmering operation; design of steam coil limit heating capacity

6.4.5.4.4 Operational Controls This section discusses the operational controls that are practiced to provide assurance that the safety criteria discussed in the previous section are met. The detection, likely cause and remedy for typical off-standard conditions for the neptunium recovery process are given in Table 6-28.

6.5 PROCESS SUPPORT SYSTEMS

6.5.1 Process Instrumentation and Control Systems

6.5.1.1 General Considerations. Most of the process systems in PUREX must be remotely controlled because radiation shielding separates operating personnel from process equipment. Instrumentation is used to measure and automatically control process flows. Some of the parameters measured are DP (including tank liquid level and solution SG), temperature, radiation levels, electric motor amperage, and speed.

With respect to safety, there are three levels of instrumentation systems. The highest level of safety is provided by instrumentation, coupled with shutdown interlocks that automatically interrupt the operation if the measured parameter exceeds preset safety operating limits. The second level of instrumentation provides automatic control of the parameter of interest within specified limits. The third and most common level of instrumentation is measurement of a parameter with direct or remote readout of the value. Audible and visual alarms may be associated with any of the three systems. Table 6-29 lists typical ranges or settings for the process control instrumentation systems provided with shutdown interlocks and alarms. Systems required to assure safety are denoted. Redundancy and independence are provided in the design of critical control instrumentation systems to minimize the probability of single failures resulting in loss of the protection system. The OSRs (see Chapter 11.0) define the conditions, safe boundaries and bases, and management control required to assure safe operation at the PUREX Facility.

The most common instrument system used consists of the following: a sensing element located in the process cell; a transmitter, generally located in the P&O gallery; and an indicator or recorder, located in one of the five control rooms. For critical functions in which alarms are necessary, alarm switches are connected either directly to the transmitter or to the indicator or recorder in a control room. The control rooms are designated as headend, central, power, N cell, and Q cell, each containing one or more graphic panel displays. The control rooms are further addressed in Section 6.6.

Instruments are designated according to function and associated process component. The meaning of various symbols found in figures throughout Section 6.5 is given in Table 6-30.

TABLE 6-28. Neptunium Recovery--Off-Standard Conditions.

Off-standard condition	How detected	Likely cause	Detection of cause	Remedy
A. High neptunium loss in the 2NW	Analysis of the 2NW for neptunium	1. Flowrates a. High 2NF (high aqueous-to-organic flow ratio) b. High 2NS c. Low 2NX 2. Stream compositions a. Uranium concentration 40% saturation, not enough TBP molecules available for extraction (Phase I) b. Low HNO_3 concentration in 2NF c. Low 2NS-H_2H_4, Fe^{+2} (reducing agent) 3. Flooding of the 2N Column 4. Off-standard pulse frequency	1. Flowrates--respective stream flow--meters/rotameters 2. Stream compositions a. Analysis of 2NF or solvent for uranium b,c. Analysis of 2NW and 2NS 3. Flooding a. Increase in the column static pressure b. Varations in interface location and/or 2NW valve loading pressure 4. Pulse--frequency count	1. Flowrates--adjust to flowsheet value 2. Stream compositions a. High uranium--decrease feed (2NF) rate b. Butt TK-J21 to correct acid concentration c. Increase reducing agent concentration in scrub 3. Flooding a. Decrease pulse frequency b. Decrease flow rates 4. Pulse--adjust frequency
B. High neptunium loss in the 2PW	1. 2PW neptunium analysis 2. Slower than expected buildup of neptunium in J Cell--2PN neptunium analysis	1. Low 2PX flowrate 2. High HNO_3 concentration in the 2P column (Phase I) 3. Flooding of the 2P Column 4. Off-standard pulse frequency	1. Flowmeter on 2PX 2. analysis of the 2PN and 2PX or NHO_3 3. Flooding a. decrease in column static pressure b. Interface location variations 4. Pulse--frequency count	1. Adjust 2PX flowrate to proper value 2. Butt TK-J21 or TK-224 and -225 into proper HNO_3 concentration 3. Flooding a. Decrease pulse frequency b. Decrease flowrates 4. Pulse--adjust frequency

TABLE 6-29. Process Control Instrumentation Systems. (Sheet 1 of 20)

Instrument	Function	Typical range or setting
	A, B, and C cells	
Cask well thermometer	Detect abnormal temperature	5°C to 65°C
DP across offgas filter[a]	Low DP cuts off electric heaters	0.3 in. WG
Low steam pressure switch on offgas manifold 293-A building	Low pressure turns off steam and turns on air to offgas jets	85 lb/in.^{2} g
Temperature of heated DOG	High- and low-temperature alarms and control of electrical heaters	93°C 177°C 204°C
Dissolver WF	WF recorder High WF alarm Low WF alarm	0 to 270 in. WG 167 in. WG 6 in. WG
Steam flow to dissolver coil	Indicator-controller Low-pressure switch turns off steam and H_2O, turns on air to TK-A3 coil	0 to 7,000 lb/h 5 lb/in.^{2} g
Dissolver SG	SG in dissolver High SG alarm[b,c] Low SG alarm[d]	1.0 to 2.0 1.4 1.03
Dissolver vacuum	Alarms on low vacuum and turns off air-bleed-in valve	2 in. WG
Dissolver temperature	Temperature recorder High-temperature alarm[c]	0°C to 200°C 125°C
Cell temperature	Temperature recorder High-temperature alarm[c]	0°C to 125°C 75°C
Dissolver seal pot	WF High WF alarm	0 to 20 in. WG 9 in. WG
Dissolver lid seal pot	WF Low WF alarm	0 to 10 in. WG 2.5 in. WG
Programmer selector switch[c] (see 6.5.1.3.4 for description)	Controls allowable; chemical additions and transfers per flow sheet sequence	6 positions
Cell sump WF	WF recorder High WF alarm	0 to 30 in. WG 15 in. WG

TABLE 6-29. Process Control Instrumentation Systems. (Sheet 2 of 20)

Instrument	Function	Typical range or setting
	A, B, and C cells (cont.)	
NH_3 scrubber waste catch tank	WF recorder High WF alarm High WF jets out tank Low WF stops jet out of tank	0 to 120 in. WG 65 in. WG 48 in. WG 12 in. WG
	D cell	
TK-D1 WF	WF recorder High WF alarm Low WF alarm	0 to 140 in. WG 87 in. WG 35 in. WG
TK-D2 WF	WF recorder High WF alarm Low WF alarm Low WF turns off agitator	0 to 170 in. WG 95 in. WG 15 in. WG 11 in. WG
TK-D3 WF	WF recorder High WF alarm Low WF alarm Low WF turns off agitator	0 to 200 in. WG 167 in. WG 32 in. WG 32 in. WG
TK-D4 WF	WF recorder High WF alarm Low WF alarm Low WF turns off agitator Low WF shuts off jet pump from TK-D4 to TK-D5	0 to 200 in. WG 167 in. WG 32 in. WG 32 in. WG 5 in. WG
TK-D4 SG	High SG alarm	1.72
TK-D5 WF	WF recorder High WF alarm Low WF alarm Low WF turns off agitator Low WF shuts off electric pump	0 to 200 in. WG 130 in. WG 32 in. WG 32 in. WG 5 in. WG
TK-D5 SG	SG recorder High SG alarm	1.3 to 1.8 1.72
Sump D cell WF	WF indicator High WF alarm	0 to 30 in. WG 15 in. WG
Temperature	Cell temperature--multipoint recorder Cell temperature alarm	0°C to 125°C 75°C

9413219.376

TABLE 6-29. Process Control Instrumentation Systems. (Sheet 3 of 20)

Instrument	Function	Typical range or setting
	E cell	
TK-E1 WF	WF recorder High WF alarm Low WF alarm Low WF shuts off agitator	0 to 100 in. WG 70 in. WG 38 in. WG 10 in. WG
TK-E3 jet pressure	Alarm and shutdown of jet pump J-E3-7	60 lb/in^2 g
TK-E3 SG	SG recorder Alarms on high SG	1.0 to 1.5 TBD[e]
TK-E3 WF	WF Recorder High WF alarm Low WF alarm	0 to 200 in. WG 148 in. WG 53 in. WG
TK-E3-2 WF (catch tank)	WF recorder High WF alarm Low WF alarm Starts jet pump-out on high WF Stops jet pump-out on low WF	0 to 60 in. WG 40 in. WG 5 in. WG 40 in. WG 5 in. WG
TK-G-E4	Thermoguard for centrifuge alarms when motor gets hot	TBD[e]
TK-E5 WF	Recorder High WF alarm Low WF alarm Low WF shuts off agitator	0 to 200 in. WG 144 in. WG 32 in. WG TBD[e]
TK-E5 SG	SG recorder	1.0 to 2.0 in.
TK-E5 temperature[c]	Low-temperature alarm	45°C
TK-E6 WF	WF recorder High WF alarm Low WF alarm Low WF alarm shuts off agitator 1 Low WF alarm shuts off agitator 2	0 to 200 in. WG 148 in. WG 32 in. WG 33 in. WG 33 in. WG
TK-E6 agitator monitors[c]	Agitators must be operating before PU recycle pump can be started	NA
TK-E6 neutron	Criticality prevention	
Sump E cell WF	WF indicator High WF alarm	0 to 30 in. WG 15 in. WG

TABLE 6-29. Process Control Instrumentation Systems. (Sheet 4 of 20)

Instrument	Function	Typical range or setting
	TK-151 $Cd(NO_3)_2$ makeup tank	
TK-151 WF	WF recorder High WF alarm Low WF alarm sounds and turns off pumps	0 to 100 in. WG 35 in. WG 12 in. WG
Cadmium monitor[c]	Low concentration alarms and turns off Pu recycle pump	35% on 50 counts range
	F cell	
TK-F1 WF	WF recorder High WF alarm Low WF alarm	0 to 150 in. WG 96 in. WG 10 in. WG
TK-F2 vapor temperature	Vent header temperature recorder Alarms on low temperature	0°C to 200°C 150°C
TK-F3 WF	WF recorder High WF alarm Low WF alarm Low WF shuts off agitator Low WF shuts off pump	0 to 160 in. WG 116 in. WG 47 in. WG 35 in. WG 6 in. WG
TK-F5 WF	WF recorder High WF alarm Low WF alarm	0 to 180 in. WG 143 in. WG 114 in. WG
E-F6 temperature	Temperature recorder High temperature alarm High temperature steam shutoff	0°C to 150°C 120°C 125°C
RTB[f] steam pressure	High pressure turns off steam to RTB[c] Low pressure closes condensate valve	39 lb/in.^{2} g 15 lb/in.^{2} g
LTB[g] steam pressure	High pressure turns off steam to LTB[c] Low pressure closes condensate valve	39 lb/in.^{2} g 15 lb/in.^{2} g
E-F6 WF	WF recorder High WF alarm Low WF alarm Low WF shuts off steam and alarms	0 to 200 in. WG 175 in. WG 146 in. WG 66 in. WG

TABLE 6-29. Process Control Instrumentation Systems. (Sheet 5 of 20)

Instrument	Function	Typical range or setting
	F cell (cont.)	
Sump (FA) WF	WF recorder High WF alarm	0 to 30 in. WG 15 in. WG
TK-F7 WF	High WF alarm Low WF alarm Low WF shuts off pump	95 in. WG 45 in. WG 10 in. WG
TK-F7 neutron	Criticality prevention	TBD[e]
TK-F8 temperature	Temperature recorder High temperature alarm High temperature steam cutoff	0°C to 150°C 120°C 125°C
TK-F8 WF	WF recorder High WF alarm Low WF alarm Low WF shuts off steam	0 to 170 in. WG 104 in. WG 35 in. WG 30 in. WG
TK-F8 inlet steam pressure	High pressure alarm switch Low pressure alarm switch High pressure shuts off steam[c]	29 lb/in.^{2} g 5 lb/in.^{2} g 29 lb/in.^{2} g
TK-F10 WF	WF recorder High WF alarm Low WF alarm Low WF shuts off agitator Low WF shuts off feed pump to backcycle concentrator	0 to 150 in. WG 93 in. WG 20 in. WG 34 in. WG 15 in. WG
E-F11 steam pressure	High pressure steam shutoff to RTB[c] Low pressure closes condensate valve High pressure steam shutoff and alarm to LTB[c] Low pressure steam closes condensate valve	39 lb/in.^{2} g 15 lb/in.^{2} g 39 lb/in.^{2} g 15 lb/in.^{2} g
E-F11 temperature	Temperature recorder High temperature alarms and cuts off steam	0°C to 150°C 137°C
E-F11 WF	WF recorder High WF alarm Low WF alarm Low WF steam cutoff	0 to 225 in. WG 175 in. WG 146 in. WG 66 in. WG

TABLE 6-29. Process Control Instrumentation Systems. (Sheet 6 of 20)

Instrument	Function	Typical range or setting
	F cell (cont.)	
TK-F12 WF	WF recorder	0 to 150 in. WG
	High WF alarm	95 in. WG
	Low WF alarm	45 in. WG
	Low WF shuts off agitator	32 in. WG
TK-F13 WF	WF recorder	0 to 170 in. WG
	High WF alarm	74 in. WG
	Low WF alarm	50 in. WG
	Low WF shuts off agitator	38 in. WG
	Low WF shuts off pump	10 in. WG
TK-F15 temperature	Tank solution temperature recorder-controller	0°C to 120°C
	Low temperature turns off raw water to tank coil	93°C
	Low temperature closes off sugar solution	93°C
TK-F15 WF	WF recorder	0 to 150 in. WG
	High WF alarm	107 in. WG
	Low WF alarm	45 in. WG
	Low WF shuts off agitator	5 in. WG
F15 seal pot	WF recorder	0 to 30 in. WG
	Low WF alarm	16 in. WG
TK-F16 WF	WF recorder	0 to 170 in. WG
	High WF alarm	96 in. WG
	Low WF alarm	7 in. WG
	Low WF shuts off agitator	5 in. WG
TK-F16 vessel pressure	Vessel pressure recorder	-5 to +5 in. WG
	Low pressure alarm	0 in. WG
Sump (FB) WF	WF recorder	0 to 30 in. WG
	High WF alarm	15 in. WG
TK-F18 WF	WF recorder	0 to 150 in. WG
	High WF alarm	88 in. WG
	Low WF alarm	10 in. WG
	Low WF shuts off agitator	42 in. WG
TK-F26 WF	WF recorder	0 to 150 in. WG
	High WF alarm	107 in. WG
	Low WF alarm	45 in. WG
	Low WF shuts off agitator	34 in. WG

TABLE 6-29. Process Control Instrumentation Systems. (Sheet 7 of 20)

Instrument	Function	Typical range or setting
	G cell	
TK-G1 WF	WF recorder	0 to 120 in. WG
	High WF alarm	71 in. WG
	Low WF alarm	19 in. WG
	Low WF shuts off recirculation pump	12 in. WG
	Low WF shuts off pump flow to 10 column	39 in. WG
TK-G1 temperature	Tank solution temperature recorder	0°C to 100°C
	High temperature alarm shuts off steam to coil[c]	60°C
Column T-G2 pressure	High pressure aqueous alarm	7.5 in. WG
TK-G2 WF	WF recorder	0 to 100 in. WG
	High WF alarm	71-in. WG
	Low WF recorder	22 in. WG
	Low WF shuts off pump	8 in. WG
TK-G2 temperature	High alarm shuts off steam to coil[c]	0 to 100°C 60°C
Sump G Cell WF	WF recorder	0 to 30 in. WG
	High WF alarm	12 in. WG
TK-G5 WF	WF recorder	0 to 200 in. WG
	High WF alarm	111 in. WG
	Low WF alarm	40 in. WG
	Low WF cuts off agitator	28 in. WG
	Low WF cuts off pumps	8 in. WG
TK-G5 temperature	High alarm[c]	60°C
TK-G7 WF	WF recorder	0 to 50 in. WG
	High WF alarm	45 in. WG
	Low WF alarm	15 in. WG
	Low WF shuts off turbomixer and pump	30 in. WG
	Low WF shuts off two pumps and agitator	6 in. WG
TK-G7 temperature	High alarm	60°C
TK-G8 WF	WF recorder	0 to 150 in. WG
	Low WF alarm	42 in. WG
	Low WF shuts off agitator	30 in. WG
	Organic detector	3 in. WG
TK-G8 temperature	High alarm	60°C

TABLE 6-29. Process Control Instrumentation Systems. (Sheet 8 of 20)

Instrument	Function	Typical range or setting
	H cell	
TK-H1 WF	WF recorder High WF alarm Low WF alarm Low WF turns off agitator Low WF turns off pump	0 to 200 in. WG 135 in. WG 25 in. WG 28 in. WG 10 in. WG
TK-H1 temperature	High alarm	60°C
Sump H cell WF	High WF alarm	5 in. WG
T-H2 column	HAS-H_2O flow recorder-controller and high flow alarm	0 to 15 gal/min 5 lb/in.^{2} g (2.5 gal/min)
	HAS conductivity recorder and low acid alarm	0.6 to 1.5 lb/gal (0.85 lb/gal)
	HAX organic flow recorder-controller and low flow alarm	0 to 120 gal/min (12 gal/min)
E-H4-1 water temperature	Low-temperature switch shuts off TK-F10 pump	40°C
Steam pressure to RTB	High pressure turns off steam to both tube bundles, also alarms[c]	29 lb/in.^{2} g
	Low-steam pressure closes RTB condensate valve	15 lb/in.^{2} g
	Low-pressure alarm	12.5 lb/in.^{2} g
Steam pressure to LTB	Low-steam pressure shuts condensate valve to LTB	15 lb/in.^{2} g
Temperature--LTB	High-temperature alarm High temperature cuts off steam, both bundles[c]	120.5°C 125°C
E-H4 WF	WF recorder High WF alarm Low WF alarm Low WF steam cutoff	0 to 250 in. WG 200 in. WG 160 in. WG 80 in. WG
	J cell	
TK-J1 WF	WF recorder High WF alarm Low WF alarm Low WF shuts off pump Low WF shuts off agitator	0 to 200 in. WG 127 in. WG 51 in. WG 11 in. WG 5 in. WG

TABLE 6-29. Process Control Instrumentation Systems. (Sheet 9 of 20)

Instrument	Function	Typical range or setting
	J cell (cont.)	
TK-J1 temperature	High alarm	60°C
TK-J1 neutron	Criticality prevention	TBD[e]
TK-J2 WF	WF recorder	variable
TK-J2 SG	SG recorder	variable
TK-J2 temperature	High alarm	65°C
TK-J3 temperature	High alarm[c]	60°C
TK-J3 WF	WF recorder	0 to 120 in. WG
	High WF alarm	83 in. WG
	Low WF alarm	36 in. WG
	Low WF cuts off agitator	24 in. WG
	Low WF cuts off pump	8 in. WG
TK-J3 tank pressure (vacuum)	Low vacuum alarm	-1 in. WG
T-J4 IBS flow	Low-flow alarm[c]	TBD
TK-J5 WF	WF recorder	0 to 150 in. WG
	High WF alarm	86 in. WG
	Low WF alarm	30 in. WG
	Low WF pump cutoff	5 in. WG
TK-J5 temperature	High alarm	60°C
T-J6 neutron (3 locations)	Criticality prevention	
T-J7 ICX temperature	High alarm closes ICX valve	60°C
EJ8-1 steam pressure to RTB	High-pressure alarm	29 lb/in.^{2} g
	High pressure shuts off steam[c]	29 lb/in.^{2} g
	Low pressure closes condensate valve	15 lb/in.^{2} g
EJ8-1 steam pressure to LTB	High-pressure alarm	29 lb/in.^{2} g
	High pressure shuts off steam[c]	29 lb/in.^{2} g
	Low pressure closes condensate valve	15 lb/in.^{2} g
EJ8-1 WF	WF recorder	0 to 250 in. WG
	High WF alarm (total tank)	227 in. WG
	Low WF alarm (total tank)	155 in. WG
	Low WF steam cutoff	76 in. WG
E-J8-1 temperature	High-temperature alarm	120.5°C
	High temperature shuts off steam[c]	125°C

TABLE 6-29. Process Control Instrumentation Systems. (Sheet 10 of 20)

Instrument	Function	Typical range or setting
	J cell (cont.)	
EJ8-1 SG	High SG alarm	1.78
EJ8-2 temperature	High alarm interlock opens cooling water valves	60°C
SPLP-J8 (condensate sample tank)	WF recorder Low WF pump out cutoff and alarm	0 to 50 in. WG 10 in. WG
Sump J Cell WF	WF recorder	0 to 60 in. WG
Sump (J2) WF	High WF alarm	12 in. WG
TK-J21 WF	WF recorder	0-200 in.
TK-J21 SG	SG recorder	1.0-1.5
TK-J21 temperature	High alarm	60°C
TK-J21 tank pressure	Pressure indicator	0-10 psig.
TK-J21		
TK-J21 2NF H_2O flow	Flow recorder controller	0-4 gpm.
TK-J21 2NF HNO_3 flow	Flow recorder controller	0-2.7 gpm.
TK-J21 1 WB flow	Flow recorder controller	0-5 gpm.
TK-J21	High WF alarm	160 in.
TK-J21	Low WF alarm	44 in.
TK-J21	Low WF steam cutoff	32 in.
TK-J21	High steam pressure to coil	29 psig.
T-J22 column DP	Differential pressure recorder	0-500 in.
T-J22 column DP	Differential pressure recorder	200-300 in.
T-J22 column DP	Differential pressure recorder	115-165 in.
T-J22 column IF	Interface recorder controller	0-3 in.
T-J22 column pulser	Pulser indicator	70 cpm.
T-J22 2NF flow	Flow recorder controller	0-9 gpm.
T-J22 2NX flow	Flow recorder controller	0-5 gpm.
T-J22 2NS flow	Flow recorder controller	0.67 gpm.
T-J22 column DP	Differential pressure recorder	0-400 in.
T-J23 column DP	Differential pressure recorder	0-400 in.

TABLE 6-29. Process Control Instrumentation Systems. (Sheet 11 of 20)

Instrument	Function	Typical range or setting
	J cell (cont.)	
T-J23 column DP	Differential pressure recorder	135-185 in.
T-J23 column IF	Differential pressure recorder	125-175 in.
T-J23 column IF	Interface recorder-controller	0-3 in.
T-J23 column Pu	Column pulse indicator	50 cpm.
T-J23 2 PX flow	Flow recorder controller	0-2 gpm.
T-J23 2PX temperature	High alarm	60°C
T-J23 2 PNR flow	Flow recorder controller	0-2 gpm.
	K cell	
TK-K1 WF	WF recorder High WF alarm Low WF alarm Low WF agitator cutoff Low WF pump cutoff	0 to 200 in. WG 125 in. WG 51 in. WG 39 in. WG 12 in. WG
TK-K1 temperature	High alarm[c]	60°C
T-K2 pulse generator	Pulser alarm (motor) Pulser alarm (alternator)	NA NA
T-K3 temperature (2EX high temperature)	Steam cutoff to spray	60°C
E-K4-1 steam inlet pressure	High-pressure alarms and closes steam valves[c] Low pressure closes condensate drain LTB Low pressure closes condensate drain RTB	29 lb/in.^{2} g 15 lb/in.^{2} g 15 lb/in.^{2} g
E-K4-1 WF	WF recorder High WF alarm Low WF alarm Low WF turns off steam	0 to 250 in. WG 240 in. WG 188 in. WG 76 in. WG
E-K4-1 SG	High SG alarm	1.72
E-K4-1 temperature	High-temperature alarm High temperature shuts off steam[c]	120.5°C 125°C

TABLE 6-29. Process Control Instrumentation Systems. (Sheet 12 of 20)

Instrument	Function	Typical range or setting
	K cell (cont.)	
TK-K5 WF	WF recorder Low WF shuts off agitator Low WF alarms High WF alarms	0 to 200 in. WG 32 in. WG 54 in. WG 135 in. WG
TK-K6 WF	WF recorder High WF alarm Low WF alarm Low WF shuts off agitator Low WF shuts off pump	0 to 200 in. WG 150 in. WG 16 in. WG 42 in. WG 12 in. WG
Sump K cell WF	High WF alarm	10 in. WG
	L cell	
Sump (SLK) WF	High WF alarm	1-1/2 in. WG
L cell DP	DP recorder Low-DP alarm	-2 to +2 in. WG 0.1 in. WG
Sump (SLL) WF (2)	High WF alarm	7 3/8 in. WG and 1/2 in. WG
T-L1 pulse generator	Motor alarm	NA
T-L2 pulse generator	Motor alarm	NA
2BP alpha monitor	High-alpha alarm Low-alpha alarm	15 g/L 4 g/L
TK-L3 WF	WF recorder High WF alarm Low WF alarm Low WF cuts off pump	0 to 170 in. WG 134 in. WG 3 in. WG 3 in. WG
TK-L3 temperature	High alarm	60°C
SPL-3AF liquid level	Liquid level alarm	2 in. WG
SPLP-L4 3AW alpha monitor	High-alpha alarm Low-alpha alarm	0.1 g/gal 0.01 g/gal
3AF-HNO_3	Flow recorder-controller Low-flow alarm	 0.1 gal/min
PSF HNO_3 monitor	Conductivity recorder and low acid alarm	0.6M to 1.6M (1.0M)
T-L6 evaporator tube bundle pressure	High-pressure alarm High pressure cuts off steam Low-pressure alarm	29 lb/in.^{2} g 29 lb/in.^{2} g 5 lb/in.^{2} g

TABLE 6-29. Process Control Instrumentation Systems. (Sheet 13 of 20)

Instrument	Function	Typical range or setting
	L cell (cont.)	
T-L6 WF	WF recorder Low WF alarm Low WF shuts off steam and air	0 to 140 in. WG 17 in. WG 17 in. WG
T-L6 process temperature	High temperature shuts off steam valve[c] High-temperature alarm	123°C 119°C
T-L6 SG	High SG alarm High SG shuts off steam	1.35 1.35
E-L7 WF	WF recorder Low WF alarm Low WF shuts off steam	0 to 140 in. WG 17 in. WG 17 in. WG
E-L7 steam pressure	High steam pressure shuts off steam High steam pressure alarm Low steam pressure alarm	29 lb/in.^{2} g 29 lb/in.^{2} g 5 lb/in.^{2} g
E-L7 process temperature	High-temperature alarm High temperature shuts off steam[c]	123°C 127°C
E-L7 SG	High SG alarm High SG shuts off steam	1.68 1.68
TK-L8-PCP WF	WF recorder High WF alarm	0 to 180 in. WG 137 in. WG
L cell fire alarm[c]	Alarms fire in cell	
	PR room	
TK-L11 WF	WF recorder High WF alarm	0 to 200 in. WG 106 in. WG
Sump (SLD) WF	High WF alarm	1 in. WG
	M cell	
TK-M1 (decontamination cell tank)	WF indicator High WF alarm Low WF alarm	0 to 326 in. WG 137 in. WG 50 in. WG
Sump (SMA) WF	WF recorder High WF alarm	0 to 30 in. WG 6 in. WG

TABLE 6-29. Process Control Instrumentation Systems. (Sheet 14 of 20)

Instrument	Function	Typical range or setting
	M cell (cont.)	
TK-M2	WF recorder High WF alarm Low WF alarm	0 to 30 in. WG 137 in. WG 50 in. WG
Sump (SMB) WF	WF recorder Low WF alarm	0 to 30 in. WG 6 in. WG
	N cell	
TK-L9 WF	WF recorder High WF alarm	0 to 70 in. WG 50 in. WG
TK-M3 WF, TK-M4 WF, TK-M5 WF, and TK-M6 WF	WF recorder High WF alarm Low WF shuts pump to TK-N3	0 to 300 in. WG 256 in. WG 42 in. WG
Sump (SMC) capacidance probe	Liquid alarm	Positive conductivity
TK-N3 WF	WF recorder/alarm High WF closes discharge valves on P-M3, -M4, -M5, and -M6-1	0 to 60 in. WG 48 in. WG
TK-N6 WF	WF recorder/alarm Low WF shuts down metering pumps P-N35/-N36-1	0 to 70 in. WG 9 in. WG
TK-N5 WF	WF recorder/alarm; low WF shuts off recirculation pump P-N5-1	0 to 100 in. WG 10 in. WG
TK-N7 temperature	Temperature indicator controller/alarm	0°C to 150°C 60°C
TK-N7 pressure	Pressure indicator/alarm; high pressure shuts off $H_2C_2O_4$ and $Pu(NO_3)_4$ feed pumps	0 to 30 in. WG 3 in. WG
F-N8 liquid level	Liquid-level alarm	2.25 in. WG

TABLE 6-29. Process Control Instrumentation Systems. (Sheet 15 of 20)

Instrument	Function	Typical range or setting
	N cell (cont.)	
F-N8 overflow vessel	Liquid-level alarm - liquid in overflow vessel shuts off feed pumps to TK-N7	1.0 in. WG
CA-N9 temperature	Temperature recorder-controller/alarm (6 nearest points)	0°C to 600°C 425°C (high) 375°C (low)
CA-N9 screw speed	Screw speed indicator/controller/alarm	0.1 to 200 rpm 1.5 rpm (low)/2.5 rpm (high)
CA-N10 temperature	Temperature recorder-controller/alarm	0°C to 600°C 525°C (high) 475°C (low)
CA-N10 screw speed	Screw speed indicator/controller alarm	0.1 to 200 rpm 3.5 rpm (low)/4.5 rpm (high)
TK-N11 WF	WF recorder/alarm (low WF shuts down the N13 concentrator feed pump); high WF shuts $H_2C_2O_4$ and $Pu(NO_3)_4$ feed pumps to TK-N7	0 to 100 in. WG 10 in. WG (low) 58 in. WG (high)
TK-N13 WF	WF recorder High alarm Low alarm	0 to 50 in. WG 40 in. WG 8.5 in. WG
TK-N15/-N16 WF	WF indicator/recorder/alarm (low WF on tank in service shuts down circulation pump)	0 to 100 in. WG 13 in. WG
F-N18 pressure	Pressure recorder/alarm	0.5 to 1.5 in. WG 0.2 in. WG
TK-N19 WF	WF recorder/alarm	0 to 50 in. WG 4 in. WG
TK-N21, -N22 WF	WF indicator/recorder/alarm	0 to 100 in. WG 72 in. WG (high) 12 in. WG (low)
TK-N20 liquid level	Liquid-level alarm	14 in. WG
TK-N39, -N40 WF	WF recorder/alarm	0 to 200 in. WG 101 in. WG

TABLE 6-29. Process Control Instrumentation Systems. (Sheet 16 of 20)

Instrument	Function	Typical range or setting
	N cell (cont.)	
TK-N30 WF	WF recorder/alarm (high WF in TK-N30 actuates MOV to bypass vacuum header and transfer to vent header)	0 to 100 in. WG 49 in. WG
Glovebox floor liquid detectors	Liquid detectors/alarm	Positive conductivity
	R cell	
TK-R1 WF	WF recorder High WF alarm Low WF alarm Low WF shuts off recirculation pump Low WF shuts off pump flow to 20 column	0 to 120 in. WG 69 in. WG 18 in. WG 6 in. WG 39 in. WG
TK-R1 temperature	High alarm shuts off steam to coil	0°C to 100°C 60°C
TK-R2 WF organic detection	WF recorder Organic detection alarm (level at 72 in.) Low WF alarm Low WF shuts off pump	0 to 100 in. WG 3 in. WG 20 in. WG 8 in. WG
TK-R2 temperature	High alarm shuts off steam to coil	0°C to 100°C 60°C
T-R2 pulse generator	Motor alarm	NA
TK-R5 WF	WF recorder High WF alarm Low WF alarm Low WF shuts off agitator Low-pump pressure causes automatic decanter pump switching	0 to 200 in. WG 131 in. WG 69 in. WG 37 in. WG 25 $lb/in.^2$ g
TK-R5 temperature	High alarm	60°C
TK-R7 WF	WF recorder High WF alarm Low WF alarm Low WF shuts off agitator	0 to 200 in. WG 131 in. WG 59 in. WG 47 in. WG

TABLE 6-29. Process Control Instrumentation Systems. (Sheet 17 of 20)

Instrument	Function	Typical range or setting
	R cell (cont.)	
TK-R7 temperature	High alarm turns off steam to coil[c]	60°C
TK-R8 WF organic detection	WF recorder	0 to 150 in. WG
	Organic detection alarm (level at 87 in.)	3 in. WG
	Low WF alarm shuts off steam	40 in. WG
	Low WF shuts off agitator	28 in. WG
TK-R8 temperature	High alarm	0 to 100°C 60°C
R cell sump WF	High WF alarm	12 in. WG
	U cell	
TK-U1 WF	WF recorder	0 to 250 in. WG
	Low WF turns off agitator	29 in. WG
	Low WF turns off pump	9 in. WG
	High WF alarm	175 in. WG
	Low WF alarm	29 in. WG
TK-U2 WF	WF recorder	0 to 250 in. WG
	High WF alarm	175 in. WG
	Low WF alarm	29 in. WG
	Low WF turns off agitator	29 in. WG
	Low WF turns off pump	9 in. WG
TK-U1 and TK-U2 pump pressure	Low-pump pressure switches pump automatically	40 lb/in.^{2} g
TK-U3 WF	WF recorder	0 to 250 in. WG
	High WF alarm	138 in. WG
	Low WF alarm	25 in. WG
	Low WF turns off agitator	80 in. WG
TK-U4 WF	WF recorder	0 to 250 in. WG
	High WF alarm	138 in. WG
	Low WF alarm	25 in. WG
	Low WF shuts off agitator	80 in. WG
TK-U5 WF	WF recorder	0 to 200 in. WG
	High WF alarm	150 in. WG
	Low WF alarm	30 in. WG
	Low WF turns off agitator	30 in. WG
	Low WF turns off feed flow pump 1	30 in. WG
	Low WF turns off feed flow pump 2	30 in. WG

TABLE 6-29. Process Control Instrumentation Systems. (Sheet 18 of 20)

Instrument	Function	Typical range or setting
	U cell (cont.)	
TK-U6 WF	WF recorder High WF alarm Low WF alarm	0 to 150 in. WG 130 in. WG 95 in. WG
U cell sumps WF	High WF alarm, sump SA High WF alarm, sump SB	4 in. WG 4 in. WG
	Headend control room	
293-A radiation	High alarm[c]	5 fold-over background
A, B, and C cell iodine monitor	High alarm	
A, B, and C cell coil monitor	High alarm	
NH_3/H_2 monitors dissolvers	High ammonia alarm[c] High hydrogen alarm[c]	2.0 vol% 2.0 vol%
E cell NH_3 monitor	High ammonia alarm[c]	2.0 vol%
XB temperature	High alarm	40°C
XA flow rate	Recorder-controller Low-flow alarm	0 to 305 gal/min 152.5 gal/min
Sump (SX) WF	WF indicator High alarm	0 to 50 in. WG 37 in. WG
XC WF	WF recorder High alarm Low alarm	0 to 160 in. WG 95 in. WG 25 in. WG
XD WF	WF recorder High WF alarm Low WF alarm Low WF pump cutoff	0 to 120 in. WG 48 in. WG 31 in. WG 12 in. WG
XB acid flow	Low alarm	25 gal/min
	Alarms in dispatcher's office--radiation	
Green fuel detector[c]	Detect short-cooled fuel	Ratio of two gamma peaks: $^{95}Zr/^{95}Nb$ to ^{140}La is $\bar{\ }20$ (nominal) for properly aged fuel.

TABLE 6-29. Process Control Instrumentation Systems. (Sheet 19 of 20)

Instrument	Function	Typical range or setting
Alarms in dispatcher's office--radiation (cont.)		
High radiation; area personnel monitors RE chambers[c])	Detect high radiation in personnel occupied areas	5-foldover background
High-steam condensate radiation (RA-SC-1)	Detect high radiation in steam condensate	5-foldover background
High-radiation condensate catch tank caisson (RA-SC-2B)	Detect high radiation in steam condensate	5-foldover background
Radiation monitor failure, 201 pump pit[c]	Detect failure of cooling water monitor	5-foldover background
Radiation monitor failure, steam condensate pit	Detect failure of steam condensate monitor	5-foldover background
East sample gallery air contamination	Detect high radiation on the east sample gallery air sampler	4 times Table II/h
Beta-gamma stack gas monitor	Detect high radiation in canyon ventilation exhaust	5,000-foldover Table II concentration
Stack gas iodine monitor[c]	Detect high ^{131}I in canyon ventilation exhaust	5,000-foldover Table II concentration
Criticality alarms, 10 each[c]	Detect nuclear criticality accident	
Alarms in Dispatcher's Office--Fire[c]		
F cell (east and west)	Fire detection	
G cell	Fire detection	
H-J cell	Fire detection	
K cell	Fire detection	
L cell	Fire detection	
P&O gallery	Fire detection	
276-A (R cell)	Fire detection	

TABLE 6-29. Process Control Instrumentation Systems. (Sheet 20 of 20)

Instrument	Function	Typical range or setting
Other alarms and recorders		
Breathing air low pressures[c]		
Vacuum air sampling pump failure	Alarm failure	10 in. mercury vacuum
Hot-bearing alarm on 291-A exhaust		
Criticality recorders N cell[c]	Record radiation from a nuclear criticality accident	
Criticality recorders PR room[c]	Record radiation from a nuclear criticality accident	
Criticality recorders Q cell[c]	Record radiation from a nuclear criticality accident	
Personnel monitors[c]	Record radiation readings of personnel monitors	

[a]Differential pressure.

[b]Prevents the addition of $NaNO_3$, AFAN, or ANN via nozzle G6.

[c]System required to assure safe conditions.

[d]Prevents the addition of NaOH or KOH via nozzle G7.

[e]Range or setting to be determined prior to PUREX "hot" startup.

[f]Right tube bundle.

[g]Left tube bundle.

TABLE 6-30. Instrumentation Symbol Legend.

Instrumentation symbol legend

Symbol	Process variable 1st letter	Instrumentation function 2nd and 3rd letters
A	Ampere	Alarm
AMP		Amplifier
AN		Analyzer
B	Batch	
C	Conductivity	Controller
CO	Corrosion	
CVT	Converter	
D	Differential	
E	Electric	Element
F	Flow	
I		Indicator
IF	Interface	
J	Jet	
KK	Fire-Eye	
L	Liquid	Level
M	Manual	Meter
MK	Microphone	
P	Pressure	Pressure
PB		Pushbutton
pH	Acidity	
PU	Pulser	
Q		Integrator
R	Radiation	Recorder
S	Speed-selector	Switch
SG	Specific gravity	
SPK	Speaker	
SP		Setpoint
T	Temperature	Transmitter
V	Valve	Valve
VIB	Vibration	
W	Wobble	
WF	Weight factor	
X		Reversing
K	Relay	
Z	Pneumatic relay	

Line designations

- E - Vent
- P - Process
- MW - Demineralized water
- RW - Raw water
- SPL - Sampler
- S - Steam
- UD - Utility drain
- XY - Instrument Electrical
- X - Electrical
- YA - Instrument
- Process and Service Line
- Main process stream
- Instrument air lines
- Capillary tubing
- Electrical leads

Equipment symbols

- A - Agitator
- E - Heater, condenser, or concentrator
- F - Filter
- G - Centrifuge
- H - Heater
- JGV - Jet gang valve
- PG - Pulse generator
- PM - Pulse motor
- P - Pump
- SPLP - Sampler pot
- TK - Tank
- T - Tower (column)

Miscellaneous

- ASP - Automatic setpoint adjustment
- DM - Displacement meter
- DOV - Diaphragm-operated valve
- CRM - count rate meter
- LS - Limit switch
- MCC - Motor control center
- POV - Piston-operated valve
- PRV - Pressure-reducing valve
- RO - Restricting orifice
- SRV - Safety relief valve
- SNC - Scintillation counter
- TRV - Temperature-regulating valve
- (S) - 25 lb/in.^{2}g steam purge
- (A) - 20 lb/in.^{2}g instrument air
- 30 lb/in.^{2}g air purge rotameter
- Panel mounted
- Local mounted
- (SP) - Seal pot
- (FM) - Magnetic flow meter
- Nuclear safety panel mounted
- Diaphragm-operated valve
- Globe valve
- Ball valve
- Gate valve
- Jet
- Strainer

6.5.1.2 Process Control Instrumentation.

6.5.1.2.1 Purge-Type Instrumentation. Based on nuclear fuels reprocessing experience, air-purged dip tubes used to measure pressure or DP are simple, reasonably accurate, and reliable. Purge-type systems are used to measure WF, which converts to liquid level with application of a SG value, also determined by purge-type instrumentation.

Other applications include DP across extraction column sections or interface determination by DP across the disengaging area of a two-phase system.

Orifice meter DP and flow determination also require DP measurements, although the sensing lines may not be air-purged.

On the control side of a system, such as regulating flows of solution or gas, pneumatic pressure is generally used. The pressure may be on, off, or variable for variable flow. Typical applications are to position DOV, piston-operated valves (POV), and piston-operated dampers in the ventilation systems.

The extent of pneumatic instrument and control applications is indicated by the 150 mi of instrument tubing in the building. The generic control systems in Section 6.5.1.3 illustrate several examples. A primary design concern is precluding reverse flow of radioactivity into the sensing lines, particularly since most of the purge meters are located in the control rooms. This is accomplished by maintaining a higher (relative to process conditions) pressure to the purge meter and a constant displacement flow through the sensing line (see Section 6.1.4.1.3).

6.5.1.2.2 Float-Type Interface Sensors. The majority of pulse columns use a float to locate the position of the two-phase interface in the respective column disengaging section. An interface float is a cylinder about 2 in. in diameter and 5 to 12 in. long. The float is weighted so as to "just float" on typical column aqueous and "just sink" in typical column organic, thus floating at the organic-aqueous interface. An armature is connected to the float and travels in a stainless steel sleeve surrounded by a transmitter coil. The receiver and transmitter coils are interconnected with precision range resistors to form two parallel circuits. The result is an impedance bridge capable of detecting small changes in position of the float transmitter armature. When the transmitter and receiver armatures are in corresponding positions in the coils, the impedance in each of the two circuits is about equal and no current flows. However, as soon as the transmitter armature moves in response to a change in the interface level, the impedance of the transmitter coils changes, causing a small flow of current. The electronic amplifier detects the magnitude and phase relationship of this current, amplifies it, and uses it to bring the impedance bridge back into balance. The recording pen, indicating pointer, and controller are actuated by the receiver. The controller will signal a flow control valve to change the plug position in order to restore the interface position. The device is commonly used and detailed descriptions are available.[7,8] An interface control system that uses a float sensor is described in Section 6.5.1.3.2 and illustrated in Figure 6-53.

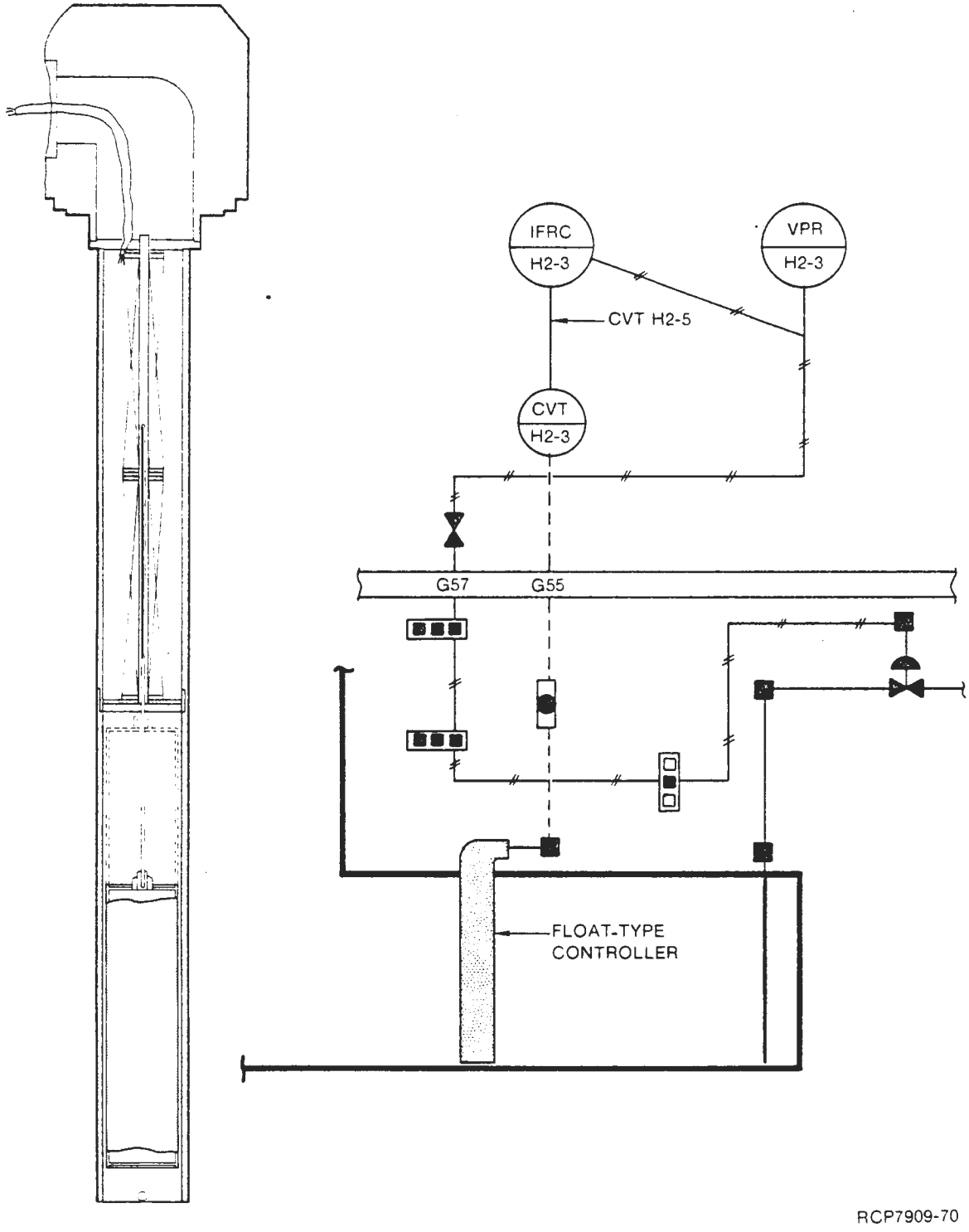

FIGURE 6-53. H2 Interface Control System.

6.5.1.2.3 Temperature Sensors. There are three types of temperature measuring sensors used in the PUREX Plant: resistance thermometers, mercury thermometers, and thermocouples; descriptions follow.

- Resistance Thermometers

  Resistance elements are used for temperature measurements in hot zones and in cold applications in which a record is needed. Resistance elements make use of the variation with temperature in the electrical resistance of a coil of nickel or platinum wire, comprising the resistance element, which is wound on an insulator and encased by a thin, protective, stainless steel tube. For canyon applications, this sensing element is installed in a stainless steel well fabricated of 1/2-in. pipe mounted in a jumper assembly. When automatic temperature control is desired, the resistance element is connected electrically to an electric-to-pneumatic converter. The converter sends an air signal to a steam-flow recorder-controller or directly to a DOV in a cooling water line.

- Mercury Thermometers

  Mercury thermometers with dial indicators are used for temperature measurements on "cold" process streams and vessels in which no record is required. Mercury-filled capillary tubing thermometers function on the expansion of mercury and the coefficient of expansion of the confining system. The sensing well is connected by a small-diameter, flexible, armored, stainless steel capillary to a Bourdon-tube pressure gauge calibrated for temperature readings. All linkages are of stainless steel.

- Thermocouples

  Thermocouples generate electrical potentials that are proportional to the difference between the temperature at the hot junctions in the temperature probes, and the temperatures at the cold or reference junctions where thermocouple material wires are connected to copper wires.

  The electrical signals from both thermocouples and resistance-type instruments can be converted to pneumatic signals when necessary. This conversion requires a wheatstone bridge as part of the component interface. Detailed descriptions exist.[7,17] Examples are presented in Section 6.5.1.3.

6.5.1.2.4 Flow Measurement. There are several types of flow metering devices in use at PUREX. These are selected for specific applications by consideration of the material to be measured and the range of flow rates expected.

- Orifice Meters

Orifice meters are used to monitor the flow of steam, air, and water services. Orifice meters operate on the principle of a constant area flow restriction with variable head pressure drop across the restriction. A DP transmitter, connected to the orifice pressure taps, converts the DP across the orifice plate due to fluid flow to an air pressure signal proportional to the fluid flow. The air pressure signal is transmitted to either a pressure gauge, an indicator-controller, an indicator-integrator, or a recorder-controller located on the graphic panel.

- Pneumatic Rotameters

A pneumatic, transmitting rotameter is used to measure the flow rate of cold process streams when the maximum flow rate is greater than 0.2 gal/min. The instrument can be located in the P&O gallery. As the rotameter float responds to variations in flow, it moves in a cast armature that contains two magnets. These magnets actuate two external magnets, which mechanically operate a pneumatic transmitter to give an air signal proportional to float position.

- Electronic Rotameters

The specially designed, all stainless steel rotameter is used to measure the flow of many radioactive streams within the PUREX canyon and sample gallery. The stream being measured passes upward through a vertical, truncated, conical, metering tube with the maximum diameter at the top. The position of the float inside the tubes is altered by changes in the flow rate of the stream. An armature, consisting of a vertical stainless steel tube, the lower half of which is filled with a soft iron core, is attached to the bottom of the float. As the flow rate increases, the float and armature rise, generating a signal in the inductance coil.

A transmitter, consisting of two inductance coils around a stainless steel flow pipe, is attached to the bottom of the metering tube. Movement of the soft iron core of the armature changes the inductance of the two coils. These changes are transmitted as an electrical signal proportional to the flow rate. The changes are transmitted to an electric-to-pneumatic converter located in the central control room. The converter changes the electrical output of the rotameter to a proportional air signal, which is transmitted to a recorder-controller located on the graphic panel in the control room. The recorder-controller sends an air signal to a DOV, usually installed in the same process line as the rotameter. The air signal positions the valve plug to produce the desired flow rate.

- Magnetic Flow Meter

  The magnetic flow meter is used extensively in the PUREX Plant. Its principle of operation is based on the electrical conductivity of the liquid stream being metered. As the conductive stream passes through the magnetic field established within the flow meter tube, it responds like a conductor in an electrical generator (i.e., voltage is created in the fluid stream perpendicular to the flow direction). The voltage is reversed through two properly placed metal electrodes on the inner wall of the flow meter. The rest of the inner wall is an electrical insulator. The greater the flow rate is, the higher will be the generated voltage. The magnetic flow meter has a number of advantages: no flow restrictions in the meter, linear flow measurement, easy range change, and wide range capability for a volume flow meter (liquid density does not affect measurement). Magnetic flow meters are being used more widely in the PUREX Plant, particularly in process locations where rotameter-float plugging has been a problem.

- Thermal Flow Meters

  In a few cases in which very small flows are to be monitored, thermal flow meters are in service. These meters measure the temperature of the incoming stream, add heat to the fluid at a constant rate, and measure the temperature of the exit stream. Flow rate is sensed as the temperature differential between the inlet and outlet stream. This electronic signal is converted to a pneumatic signal, which is used to both operate control valves and drive the pen on a flow rate chart recorder.

6.5.1.2.5 Radiation Sensors. The presence of radioactivity in the process streams requires that essentially all operations be conducted in heavily shielded areas. Monitoring process conditions depend to a large degree upon characterization of the types and energies of radiation emitted by the process materials. These emissions may be gamma, alpha, or neutron radiations.

- Gamma Scintillation Counters

  Scintillation counters are used as in-line monitoring instruments* for gamma activity. A stream sampling system incorporates a sample cell positioned near a sodium iodide crystal. The gamma rays from the sample interact with the sodium iodide crystal to produce light scintillations. These, in turn, initiate electrical pulses from a photoelectric tube. The pulses are amplified to give a reading proportional to the energy of the gamma rays being detected. The monitoring system measures the counting rate per unit volume of solution. In-line gamma monitors are of value in determining product quality in solvent extraction cycles. Gamma monitor systems are also used in determining stack gas activity and plutonium content of solid waste. Applications are discussed in Section 6.5.1.4.4.

- Ionization Chambers

Radiation instruments, using ionization chambers, are used for supplementary, approximate measurements of decontamination of the plutoniumand/or uranium-containing streams. Radiation instruments provide an indication of the intensity of gamma radiation near selected equipment pieces. Ionization chambers are employed on the dissolvers, uranium concentrators, acid concentrators, waste neutralizer, plutonium product receiver, plutonium sampler tanks, and the centrifuges. Gamma radiation from sources within range of the instrument enters an air-filled chamber, causing ionization of the air. The measured conductivity is proportional to the gamma energy absorbed by the air. The chamber is a 5-in.-diameter, 18 3/4-in. long plastic cylinder. Beta particles do not penetrate the plastic, and no "windows" for beta entry are provided, so that only gamma radiation is sensed. An aquadag (graphite suspension) coating on the inside of the cylinder wall is the positive electrode. The negative electrode is a 1/2-in. aluminum rod axial.

There are about 50 ionization chambers located in strategic building sites that are frequently or occasionally entered by personnel. In this application, they are designated "RE chambers" or "HM chambers." The chambers are read out through Keithley pico-ammeters. The systems are equipped with alarms to warn personnel of problem areas. Most of the Keithley racks are located in the P&O gallery, and most of the recorders are in the dispatcher's office. Associated with, but different from, the RE chambers are three pico-ammeters. The chambers for these units are located in Q cell, N cell, and the PR room. Recorders for these are in the dispatcher's office. The chambers are located in areas where criticality potential exists, and are capable of automatically recording radiation levels from 0.001 to 1,000 R/h, should such an excursion ever be encountered.

- Alpha Monitors

The alpha detection system consists of a cerium-activated, 1-mil surface on a 1/4-in.-thick, glass disc. The process stream is in direct contact with the activated surface, and a photomultiplier tube optically coupled to the backside of the disc senses scintillations from the activated surface. This system provides a measurement range of about 1×10^{-4} Pu g/L to 30 g/L. Applications are discussed in Section 6.5.1.4.4.

---

*In-line monitors are detectors or sensing probes placed in or adjacent to a process stream that measure a chemical or radiochemical property of the stream. Detailed descriptions of the in-line monitors used in the PUREX Plant are presented in Reference 7.

- Neutron Monitors

  Plutonium concentrations of certain streams are measured by neutron monitors located on the outside of a vessel or pipeline. The detection system consists of one or two boron trifluoride-filled tubes mounted in a paraffin moderator. The range of measurement for this system is about 1 x 10-2 Pu g/L to 10 g/L.

  Another use of the neutron monitor is measurement of the concentration of cadmium nitrate in the head tank. A neutron source and a boron trifluoride tube are installed at the bottom of the tank. As the cadmium concentration increases, more neutrons are absorbed and fewer are detected by the boron trifluoride tube. This count, therefore, relates inversely to cadmium concentration. Applications are discussed in Section 6.5.1.4.5.

9413219.1402

6.5.1.3 Process Control Systems.

6.5.1.3.1 Typical Process Tank. Figure 6-54 is a diagram showing the measurement and control systems for a typical process tank. Basic parameters of concern are temperature, solution liquid level, SG, and radiation. The example chosen has an associated neutron monitor, which is typical for selected process vessels. Neutron monitors are discussed in more detail in Section 6.5.1.4.

The temperature, SG, and radiation (neutron) are recorded. The weight of the solution is measured as a WF (Section 6.5.1.2.1) and recorded along with the SG of the solution. These data can be used to calculate the liquid level. High and low WF alarm points are set, with the alarm consisting of a panel light and annunciator.

The vessel is equipped with a pump and agitator. The current drawn by the respective electric motor is indicated on a panel-mounted ammeter.

- Solution Temperature Control

  This particular vessel requires heating, as well as cooling, capability. Consequently, solution temperature is manually controlled by the operator, who, upon visually noting the recorded temperature, selects either steam or cooling water. Actuation of a valve from the control room places cooling water on the coil. Use of coil steam requires manual valve operation in the P&O gallery. To preclude a suck-back resulting from steam collapse in the coil if it should leak, an automatic air purge of the coil following the use of steam is performed. An interlock actuates a timed air purge whenever the steam is shut off.

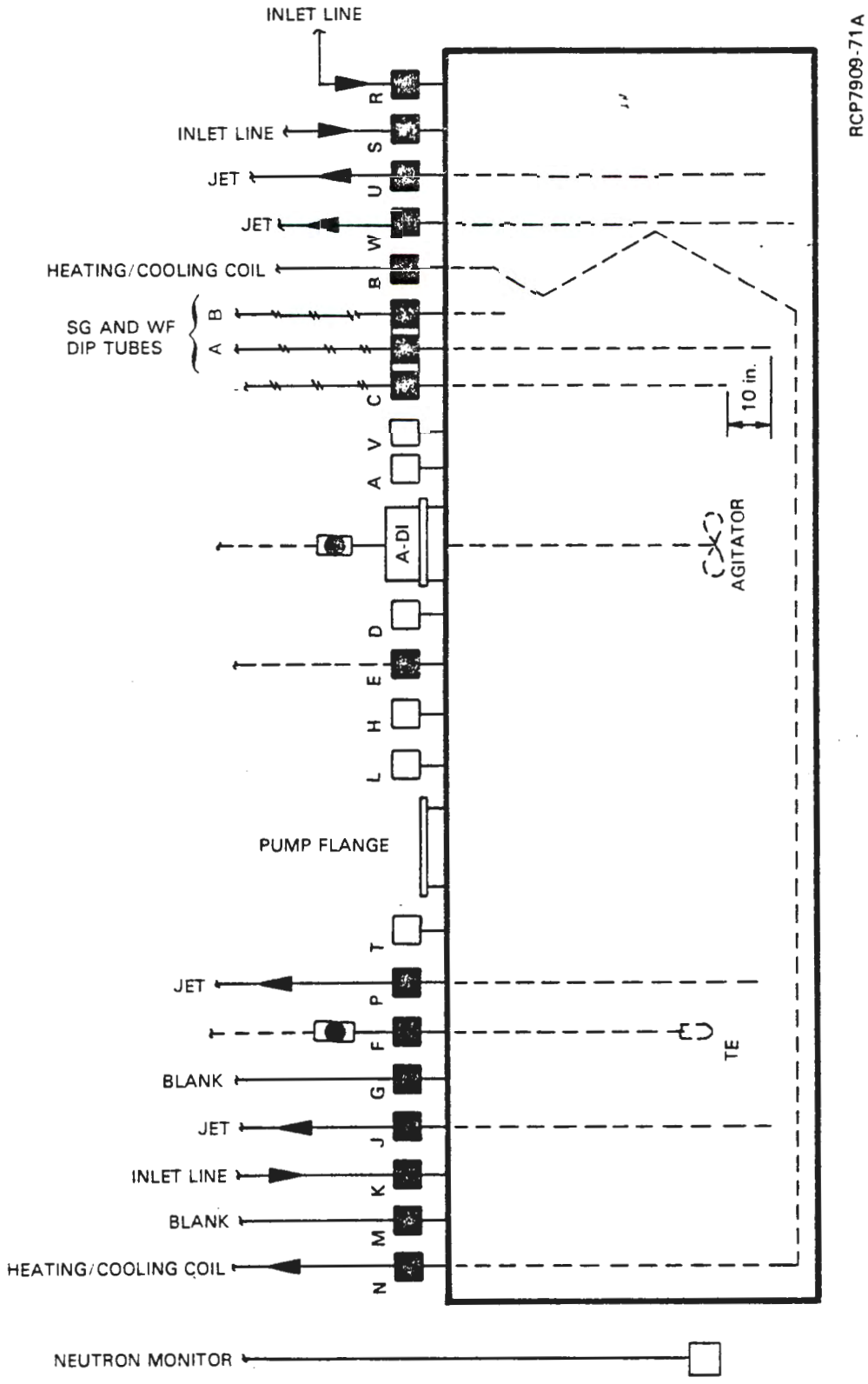

FIGURE 6-54. Typical Process Tank.

- Solution Pumping and Agitation

  Both the pump and agitator are electrically interlocked to the low-level WF alarm, so that each is shut off when the liquid falls below the preselected level. Agitators can only be operated when the bottom blade is submerged 6 in. or more to protect the agitator and to reduce organic aerosol formation where solvent may be present. The pump low-level cutoff is set to preclude pump cavitation that would shorten its operating life.

- Solution Jet Transfer

  Bulk solution transfers between vessels, in which flow-rate control is not important, are usually accomplished by steam jet to avoid excessive wear on the much more expensive pumps. A typical electric switch-type jet operatingand control-schematic is shown in Figure 6-55. Important features are the electric valves, which, when actuated, position the DOV, and the automatic-timed air purges, which are actuated when the jet switch is turned off. The air-purge duration is established for the volume of the process piping to be air purged. A typical control and operating schematic for a pneumatic jet switch is also shown in Figure 6-55. In some instances, a valve may be interposed in the pneumatic signal line to the steam control DOV to permit varying the steam pressure and flow at the panel board.

  Actuation of the switch puts steam to the jet and pressurizes a small air reservoir. When the jet is shut off, the air reservoir maintains a loading pressure on the air supply DOV, which allows an air purge of the jet and process piping. The air bleed-off rate from the reservoir is controlled by an orifice. By altering the size of the reservoir or of the orifice, the air-purge duration may be changed.

6.5.1.3.2 Typical Pulse Column. A typical PUREX "A"-type column with control instrumentation is shown in Figure 6-56. Primary instrument control parameters are stream flow rates and pulser rate. Key system measurements are interface location, organic SG, column section DP, and static pressure, in order of decreasing importance. Certain columns have instruments measuring product quality and waste loss. Specific radiation monitors, in-line and otherwise, and certain one-of-a-kind continuous analyzers are discussed in Section 6.5.1.4.

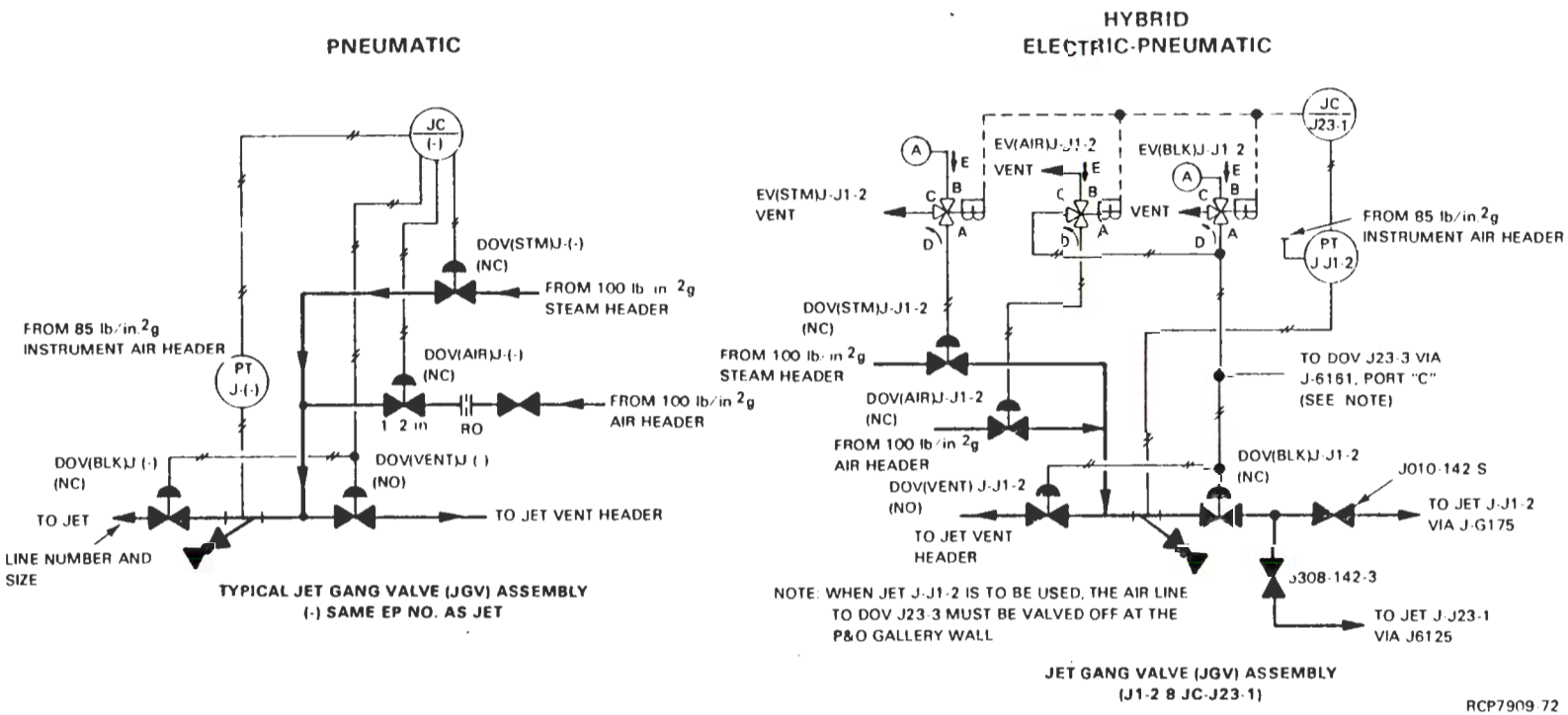

FIGURE 6-55. Detail of Jet Assembly.

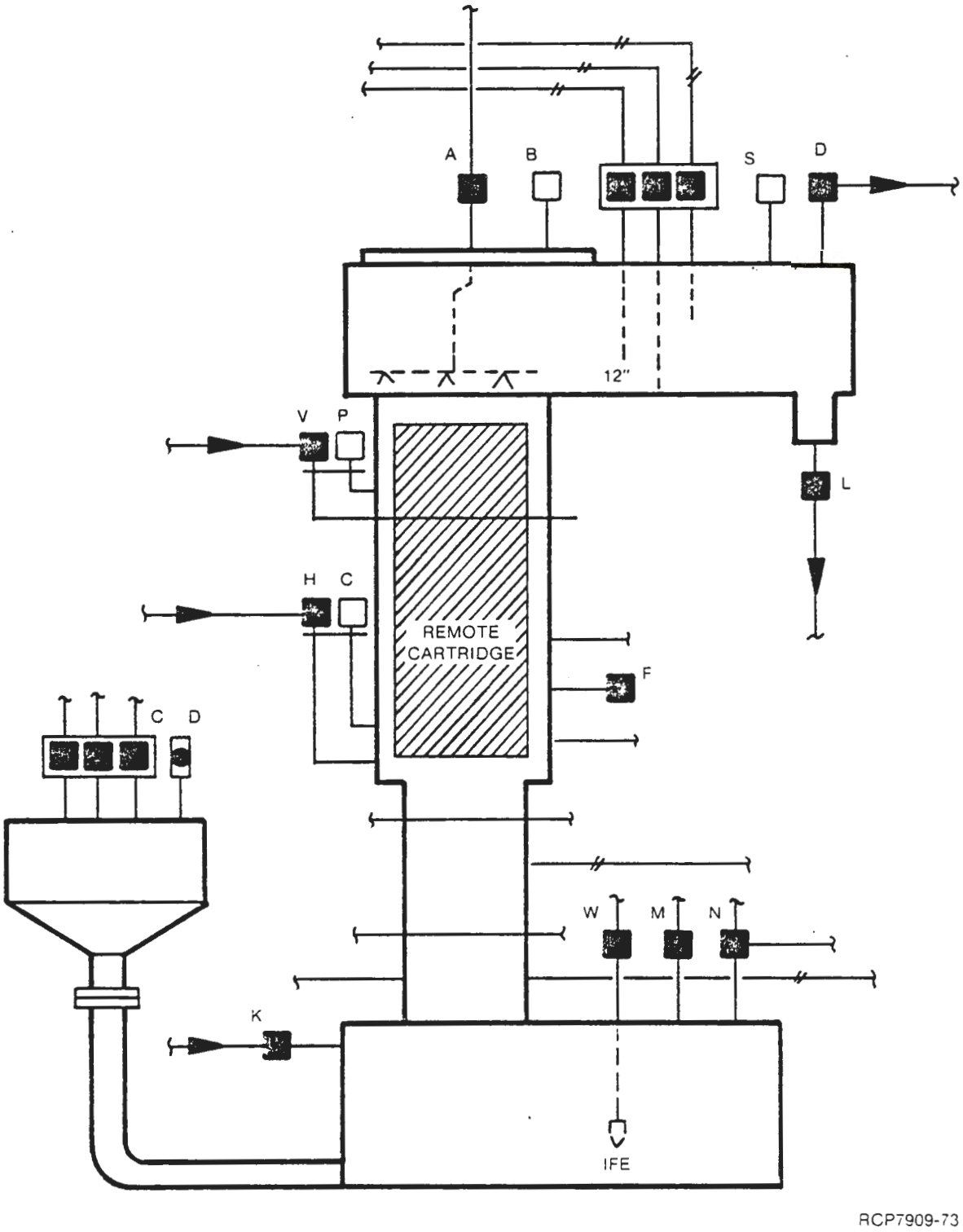

FIGURE 6-56. Typical PUREX "A"-Type Column.

Streams into a column are generally pumped or flow by gravity (either from head tanks, in the case of cold chemicals, or from hydraulic or cascade arrangement, where a stream exiting the top of one column feeds into a second column). Exiting streams either flow to the next process vessel by gravity or are jetted using a variable flow steam-motivated jet. The aqueous bottoms stream flow rate is controlled by the interface measurement system, which in turn feeds back to adjust the position of the DOV in the aqueous stream line. Flow meters were discussed in Section 6.5.1.2.4.

Interface measurement devices may be either purged dip tube or float type (Section 6.5.1.2). These are located in a disengaging section of the columns (see Table 6-15); the readings are not greatly affected by the action of the pulsers.

Pulsing action has more of an effect on column static and DP readings. The cyclic action from column pulsing can be effectively damped out; however, the absolute reading is also affected by pulse frequency. Still, these instruments do indicate trends and provide a qualitative indication of the degree of dispersed phase holdup, and, in conjunction with the solvent SG measured in the top disengaging section, also give some indication of the degree of solvent saturation. This is primarily true for columns containing uranium.

6.5.1.3.3 Typical Concentrator. Typical control systems for a PUREX thermal syphon reboiler with an organic stripping tower are shown in Figure 6-57. Although the plutonium stripper and concentrator differ in equipment size and configuration, basic process control instrumentation and parameters measured remain the same.

Concentrator bottoms solution level is measured by a standard purge-type WF. Redundant measurements are made: the total liquid level and an intermediate measurement. Temperature and SG instrumentation is similar to those previously discussed.

- Steam Pressure Control

  The steam supply to each tube bundle is controlled within a specific pressure range (see Table 6-29). The lower pressure limit is set to preclude radioactive liquid being drawn into the steam chest via a leak, and the upper limit is set to prevent possible red oil detonation. When the chest pressure drops below the reset limit, an electrical interlock is actuated which closes the steam supply valve and opens an air supply valve, pressurizing the tube bundle with air. Another interlock produces the same result if the high steam pressure limit is exceeded. This latter interlock is redundant to the pressure throttling valve, which is preset so that the steam pressure to the tube bundle is always less than the limit, and is redundant to the steam supply pressure vent valve, which is also preset to "blow" if the pressure exceeds the limit.

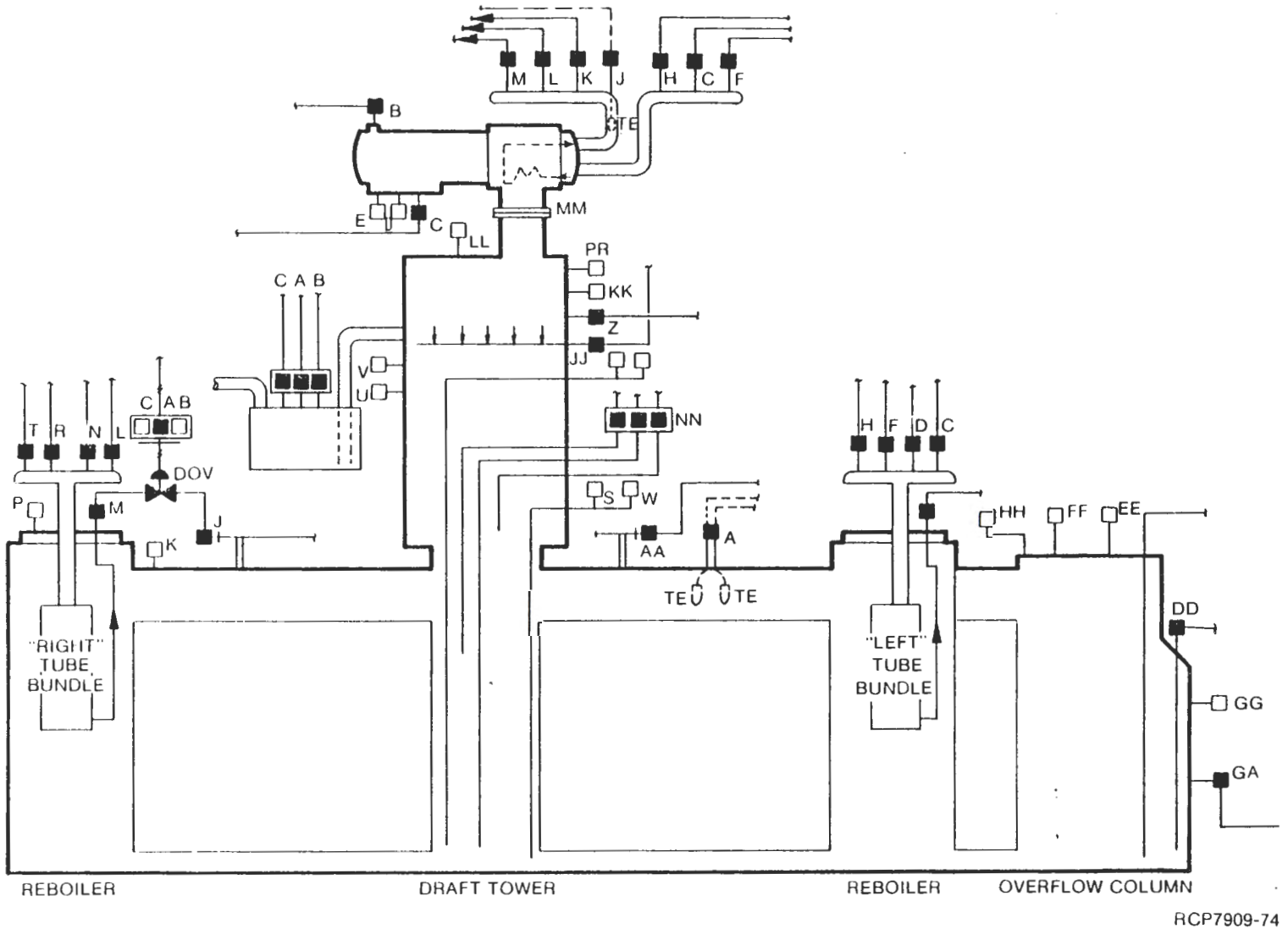

FIGURE 6-57. Typical PUREX Reboiler with an Original Organic Stripper Tower.

- Liquid Level Control

  Both high and low liquid levels in the concentrator actuate respective alarms. The low-level alarm actuates an interlock, shutting off the steam supply to both tube bundles and turns on the air supply to maintain tube bundle pressure. The high liquid level alarm alerts the operator to the possibility of the solution reaching the offgas deentraining baffles and, hence, decreasing deentrainment effectiveness.

- High-Temperature Alarm

  The temperature measurement and steam control systems are interlocked so that at a preset, high-temperature limit an alarm is actuated, the steam supply to the tube bundles is shut off, and the tube bundles are pressurized with air.

- Specific Gravity

  The concentrator is instrumented to permit automatic steam control by the SG controller output signal. The SG controller may be operated in either the automatic or manual mode.

6.5.1.3.4 Typical Dissolver Control System (Typical of Three). The basic dissolver operating parameters, solution temperature, liquid level and density, and vapor space pressure (slightly negative) are all measured, recorded, and have associated alarms. Alarms are panel-mounted lights with associated annunciation. Alarm levels are established by engineering review and require formal documentation for setpoint changes.

The steam flow control system for the dissolver coil is similar to that discussed for concentrators. When activated, the low-coil-pressure interlock shuts off the steam flow and turns on the coil air supply.

The dissolver programmer is a protective, management-controlled, interlocking, key-actuated switch system that restricts transfers and additions of materials to the dissolver system.

The six locking positions of the switch, and a list of the 12 contacts that will be actuated by each switch position, are listed in Table 6-31.

The first position is for dissolving of zirconium cladding. In the first position, contacts 1 and 10 will be activated. Contact 1 allows the addition of AFAN to the dissolver. Contact 10 allows the jetting of decladding solution from the dissolver to TK-D2.

TABLE 6-31. Programmer Switch Position and Contacts Activated.

Sequence	SS-C3-40 position	Programmer switch SS-C-40 section											
		1	2	3	4	5	6	7	8	9	10	11	12
Zr declad	1	*									*		
Metathesis	2						*	*	*		*		
U dissolution of Zr clad	3		*		*					*			
Al declad	4			*		*					*		
U dissolution of Al clad	5				*			*	*	*			
Off	6												

*Indicates section contact closed.

The second position of the programmer is for metathesis, and contacts 6, 7, 8, and 10 will be activated. Contact 6 allows the addition of potassium hydroxide to the dissolver. Contact 7 allows the activation of the jet for transferring the dissolver solution to TK-D1. Contact 8 allows the activation of jet J-D1-2, which allows jetting from TK-D1 back to the dissolver. Contact 10 allows the jetting of the solution in the dissolver to TK-D2.

The third position of the programmer switch is for uranium dissolution of zirconium-clad fuel. The contacts activated in this case are 2, 4, and 9. Contact 2 allows the addition of ANN to the dissolver. Contact 4 allows the addition of HNO_3 to the dissolver system. Contact 9 allows the jetting of the solution in the dissolver to the metal solution tank by jet J-C3-3 if the SG is greater than or equal to 1.4 or if the WF is less than or equal to 19 in. WG for the solution.

The fourth position of the programmer switch is for aluminum decladding. The contacts activated are 3, 5, and 10. Contact 3 allows the addition of sodium nitrate to the dissolver system. Contact 5 allows the addition of sodium hydroxide. Contact 10 allows the jetting of decladding solution from the dissolver to tank TK-D2.

The fifth active position of the programmer was, and could be, used for uranium dissolution of aluminum-clad fuel. In this case, the contacts activated are 4, 7, 8, and 9. Contact 4 allows addition of nitric acid to the dissolver system. Contact 7 allows the jetting of solution from dissolver to TK-D1 by jet J-C3-1. Contact 8 allows the jetting of solution from tank TK-D1 to the dissolver system. Contact 9 allows the jetting of dissolver solution to metal solution tank by Jet J-C3-3.

The final position (6) is the off position of the switch with no contacts activated.

The programmer switch activates electrical contacts in a wiring circuit, controlling chemical addition valves and jet transfer switches so that only the additions and transfers appropriate for the one particular dissolving step can be done. Administrative controls require that the supervisor or specialist examine the run sheet and recording charts on the board to be sure that the next step is ready to begin before unlocking and repositioning the switch. The dissolver operator still has to activate the jet switch or chemical addition valve switch (another electrical contact) at the appropriate time in the dissolving cycle. Failure of the programmer (which has never been a problem) would mean that the dissolver operator could not make an appropriate addition or transfer (or could make an inappropriate addition or transfer, but the operator would not attempt it except by error).

The programmer system has an important effect on criticality prevention. The occurrence of a criticality requires that: (1) the dissolution must proceed too far, and (2) precipitating agents such as fluoride and hydroxide must be introduced. The programmer system prevents the second error from happening.

This programmer, in conjunction with the proper procedural steps, also reduces the risk of accumulating plutonium in the first decladding waste tank. It also restricts the mixing of incompatible chemicals in the dissolver. The consequences of such an occurrence include precipitation, possible line plugging, excessive corrosion to the dissolvers, and/or dispersion of materials within the cell from an overly vigorous chemical reaction.

6.5.1.4 Process Monitors. Monitors are installed in key locations in the process to supplement process sample laboratory analyses. The monitors provide instantaneous readout of specific process parameters, permitting rapid process control response during transient conditions, such as startups and shutdowns, as well as rapid application of corrective actions to abnormal conditions.

Monitors, for the most part, are installed at the process sampling stations located in the sample gallery. A few monitors, such as the neutron sensors, are installed in the remote process cells. Most of the electronic components (with the exception of the preamplifiers) for the monitors are located in the in-line monitor room, which is a contamination-free, air-conditioned room located in the service portion of 202-A on the same level as the sample gallery. The preamplifiers are located as close to the sensors as possible.

The output from the monitors is printed on stripchart recorders in the control room. High-level alarms, both audible and visual, are provided.

Sensing heads and sample cells in contact with process solutions are fabricated of materials easily decontaminated to preclude buildup of residual background activity. Where necessary, special electrical cables have been installed to minimize interference with electrical signals.

System monitoring is schematically shown in Figures 6-58 through 6-60.

6.5.1.4.1 Hydrogen and Ammonia Monitors. Hydrogen and ammonia concentrations in each DOG stream are monitored by Beckman Model 7C Thermal Conductivity Analyzers and Beckman Model 865 Non-Dispersive Infrared Analyzers, respectively. Each analyzer is contained in an explosion-proof housing. These systems are shown in Figure 6-61.

The thermal conductivity analyzer uses an internal regulated power source to heat sample and reference (nitrogen gas) temperature-sensitive resistive filaments which are electrically connected as legs of a Wheatstone bridge. The bridge is balanced initially with a standard gas sample. Thereafter, a signal is generated and recorded that is proportional to the hydrogen content of the sample gas.(8)

The infrared analyzer also contains nitrogen gas as a reference non-absorbing background gas. Infrared beams are passed through both the reference cell and the sample cell where the amount of radiation absorbed is proportional to the ammonia concentration. The detector converts the resulting energy difference between the cells to a capacitance charge equivalent to the ammonia concentration that is amplified, indicated on a meter, and used to drive a monitor.(9)

Normal operation requires periodic calibration using standard gas samples.

The analyzers are used only during decladding and are shut off during the other dissolver operations. Should the hydrogen system remain operating during acid dissolution, the corrosive oxides of nitrogen would eventually destroy the heated filaments in the analyzer cells.

6.5.1.4.2 Nitric Acid Conductivity Monitors. Both electrodeless conductivity monitors and probe-type monitors are used to measure nitric acid concentrations of certain process streams.(27) The probe-type conductivity monitor is common technology. The electrodeless conductivity monitor consists of an electrically nonconducting pipe upon which two toroidal transformers are placed. One transformer is electrically charged, the other is a receiver. Process solution, containing electrolytes, flowing through the pipe forms part of the coupling electrical circuit between the two transformers. Variation in the electrolyte concentration causes a variation in the induced voltage of the receiver transformer. The electrical output of the receiver transformer, after appropriate amplification, provides an electrical signal corresponding to the solution conductivity.

Conductivity monitor signals are recorded, with calibration being done from laboratory analysis of process samples.

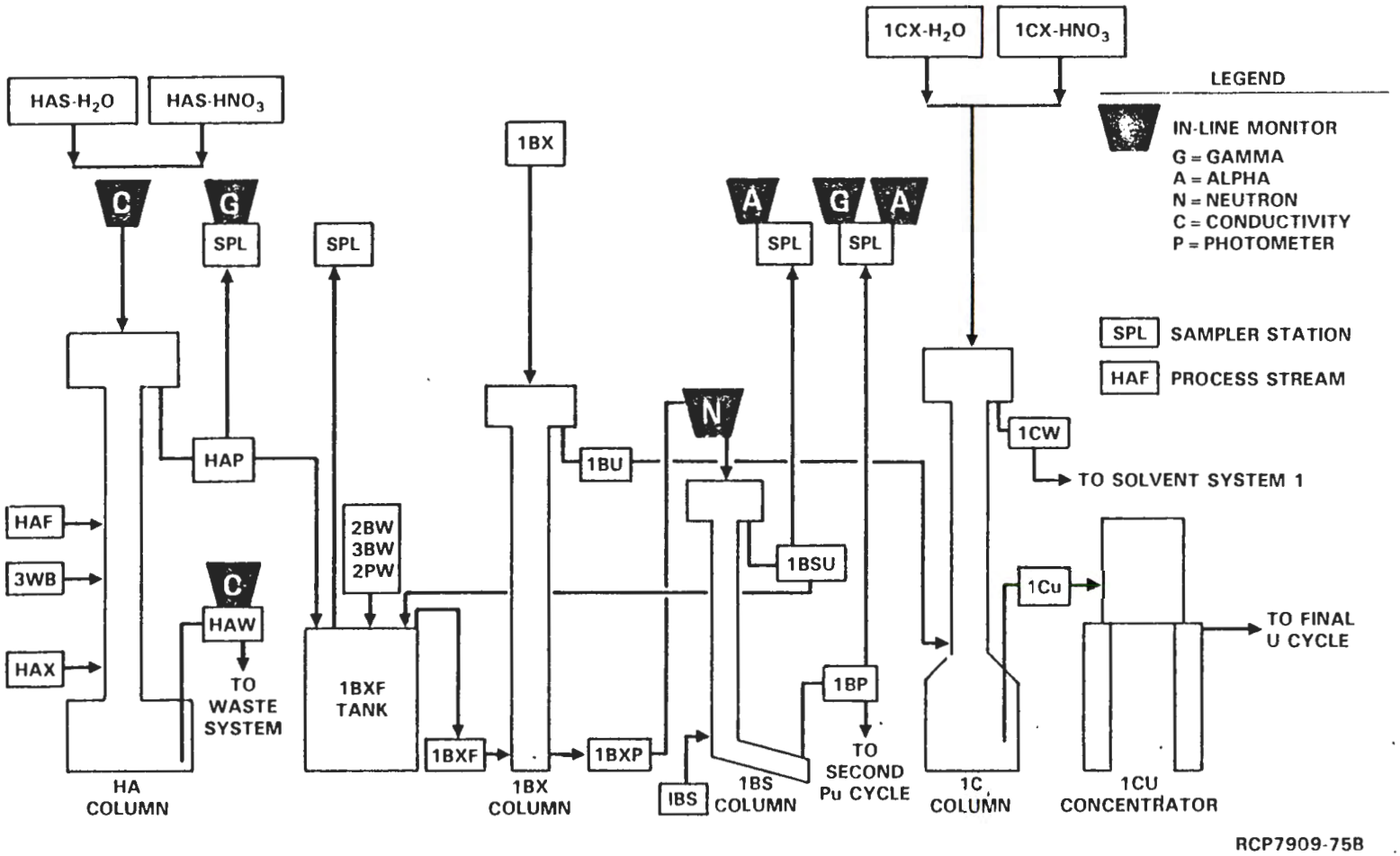

FIGURE 6-58. First Decontamination and Partition System--In-Line Monitors.

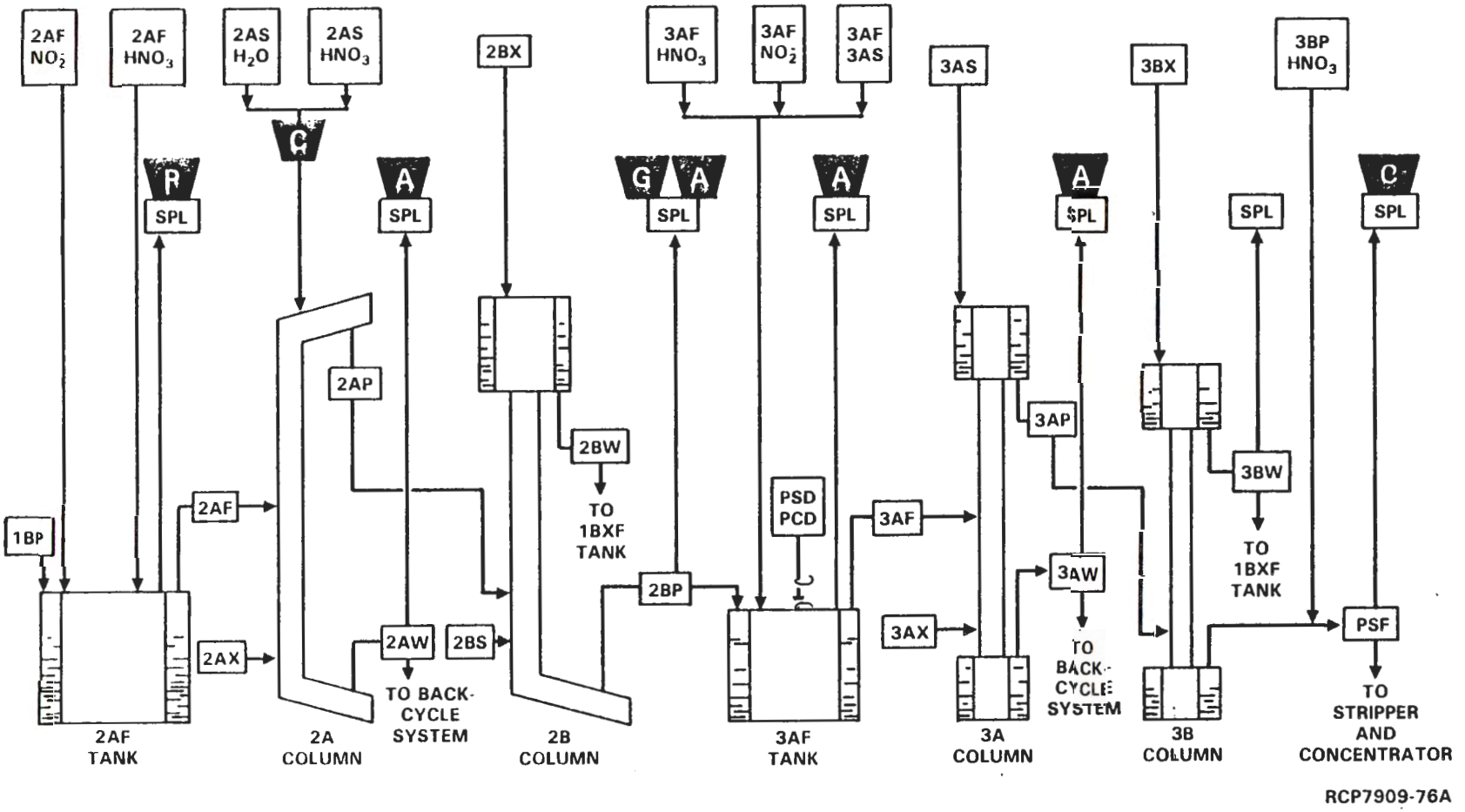

FIGURE 6-59. Second and Third Plutonium Systems--In-Line Monitors.

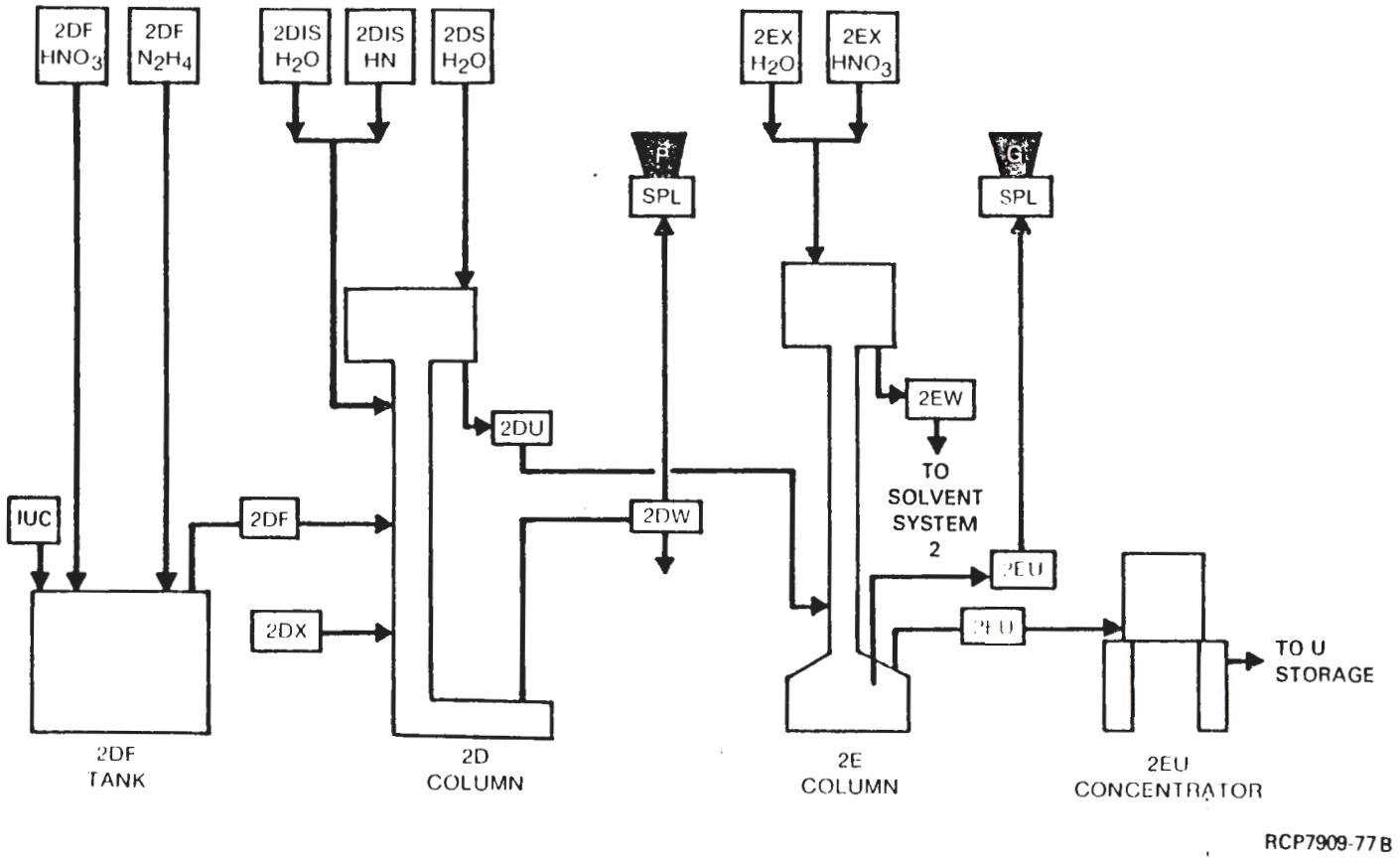

FIGURE 6-60. Final Uranium System--In-Line Monitors.

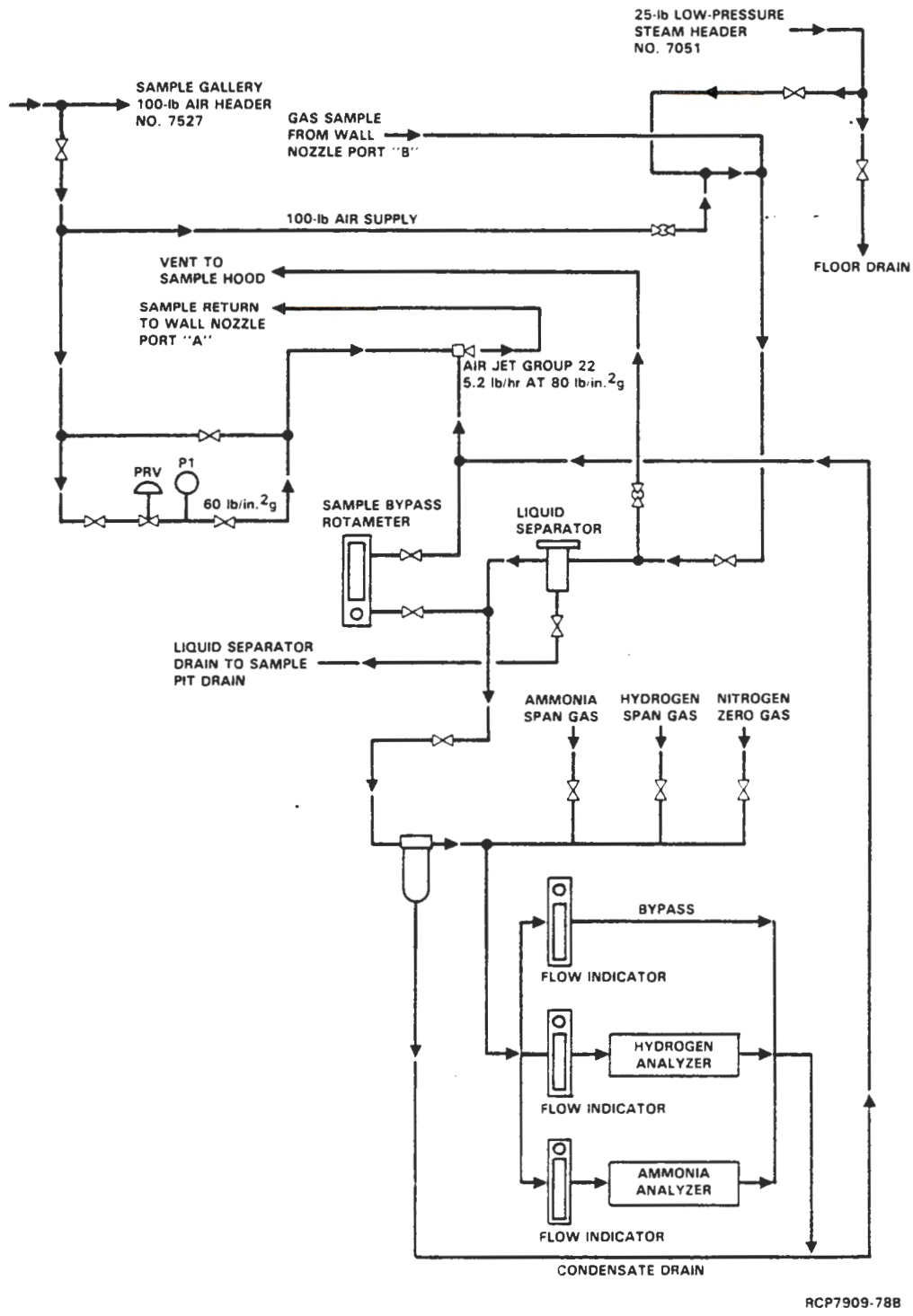

FIGURE 6-61. Hydrogen-Ammonia Gas Monitor System.

6.5.1.4.3 Photometric Monitors. A photometer measures the uranium concentration in the aqueous waste stream (2DW) from the second uranium cycle extraction column. This, in conjunction with periodic sampling of the process stream, permits close control of the uranium recycle to the codecontamination and partitioning cycle via the backcycle waste, as well as close control of the high uranium saturation in the extraction column. The photometer is calibrated to zero by using a filter to give a light wavelength not absorbed by the uranium present in the stream. Monitor range checks are made by routine comparison with laboratory analysis of process solution.

Total solution nitrite in the plutonium oxidation tank (the 2AF or TK-J5) is measured indirectly by measuring light absorption attributable to the nitrogen dioxide component of air in equilibrium with a solution containing nitric acid and sodium nitrite. The system is further described in Reference 27 and illustrated in Figure 6-62. Calibration is maintained by measurement of air and by comparing monitor results with laboratory sample analysis.

6.5.1.4.4 In-line Radiation Monitors. A typical in-line gamma and alpha monitor installation is shown in Figures 6-63 and 6-64 (schematic and detail, respectively). Gamma monitors for process solution streams are designed to measure relative ^{95}Zr-Nb and ^{106}Ru-Rh concentrations in process streams and, hence, to permit a semiquantitative assessment of FP decontamination throughout the process. The monitors are particularly critical for control during transient conditions such as startup or shutdown due to the time lag associated with sampling and laboratory analytical work. A monitor consists of a thallium-activated, sodium iodide crystal coupled to a photomultiplier tube. The sensor is mounted in a sample cell contained in a lead chamber for shielding. The device counts all gamma energies above 0.45 MeV. This permits discriminating against ^{239}Pu.

Gamma monitors with single-channel analyzers are used to monitor ^{131}I in DOG. The analyzer is set to measure 0.344 to 0.384 MeV, which centers the ^{131}I gamma emission of 0.364 MeV.

A gamma monitor with single-channel analyzer is used to measure the neptunium in the effluent from the neptunium anion exchange column (inactive). The analyzer is set to scan the 0 to 0.5 MeV range. This monitor permits close control of the neptunium elution, particularly in distinguishing between the high-impurity forecut and the pure product and, hence, enabling the operator to properly switch the effluent flow to the product receiver tank.

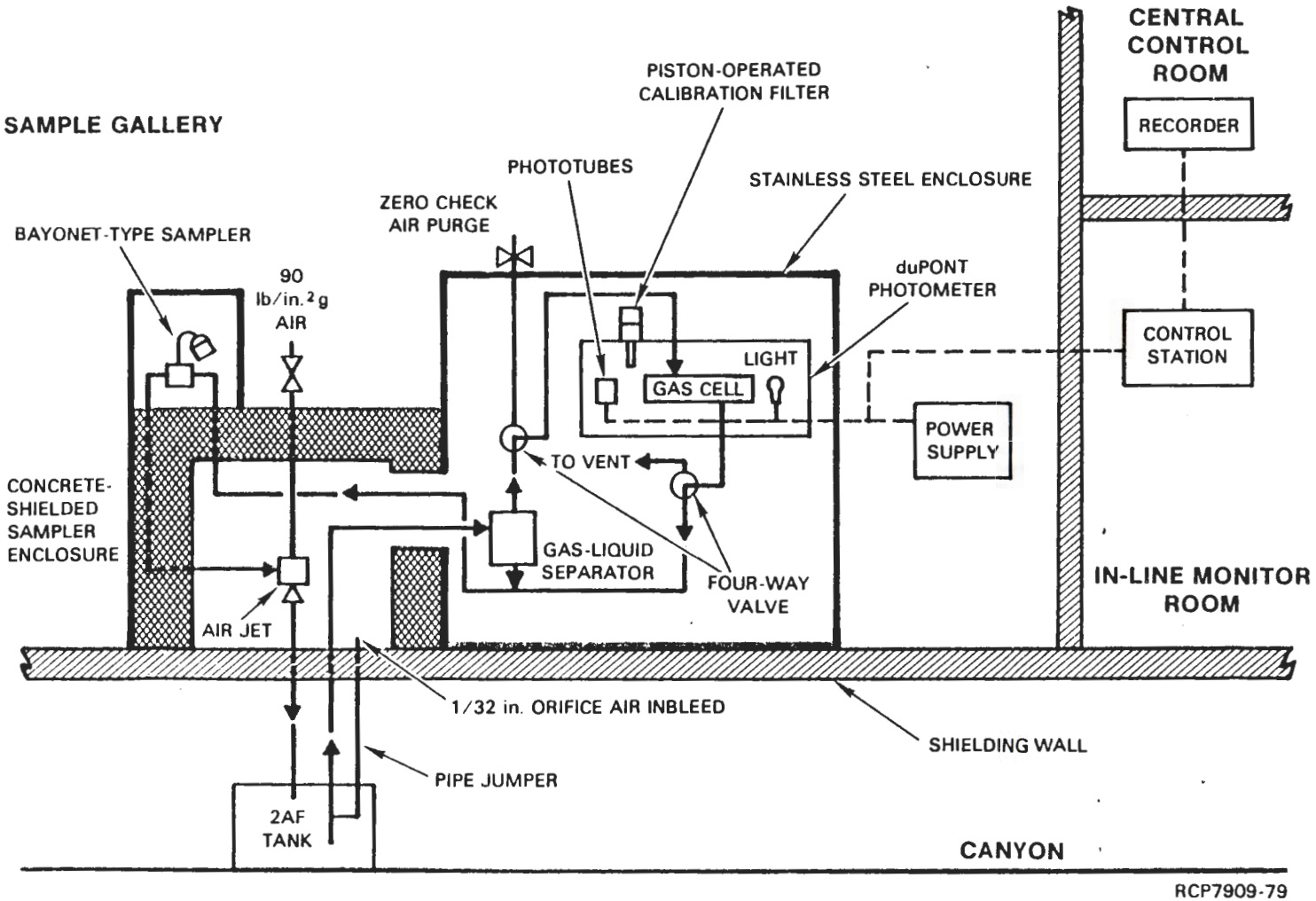

FIGURE 6-62. Nitrite Monitor System.

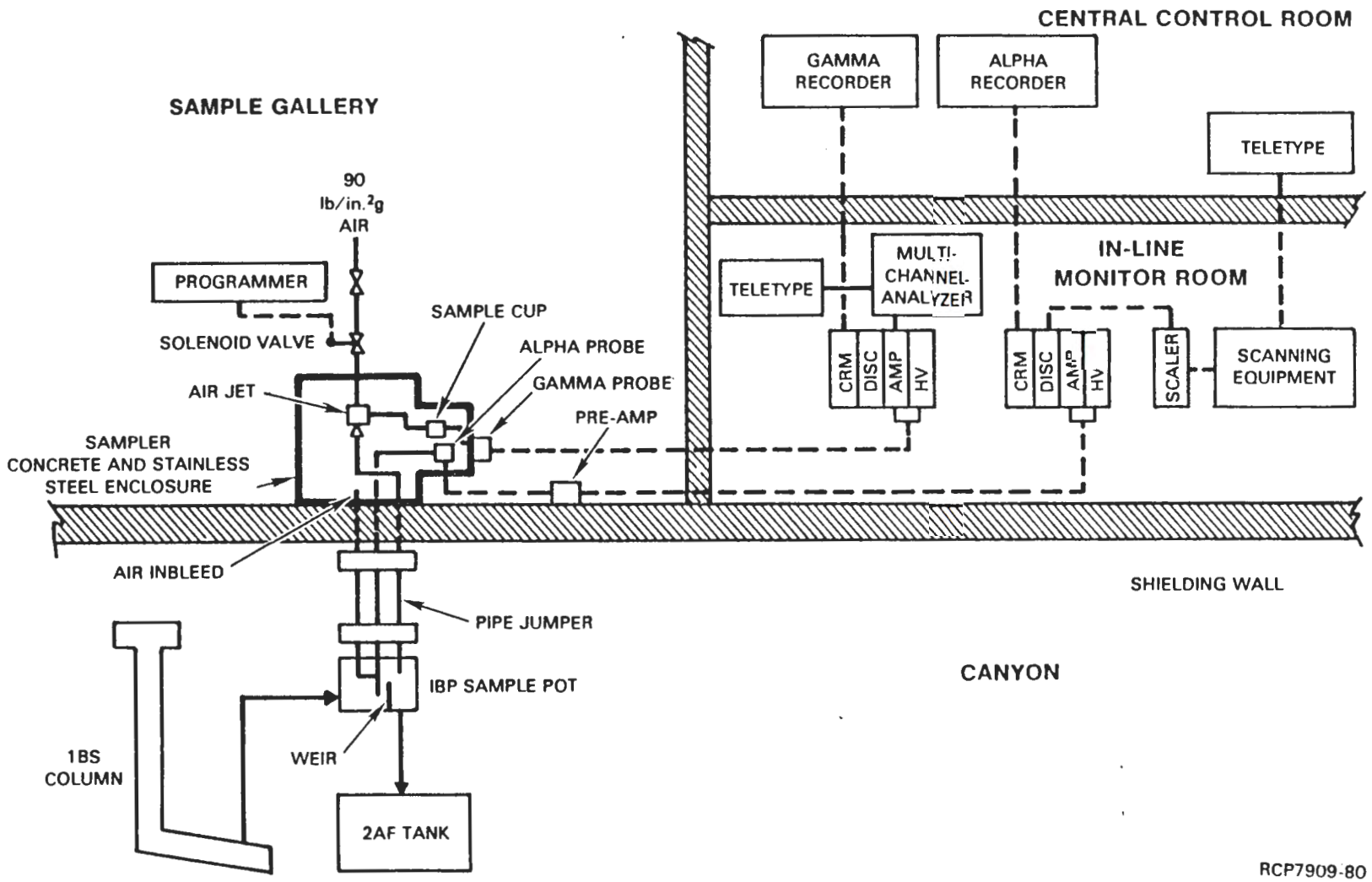

FIGURE 6-63. Schematic of Gamma and Alpha Monitor System.

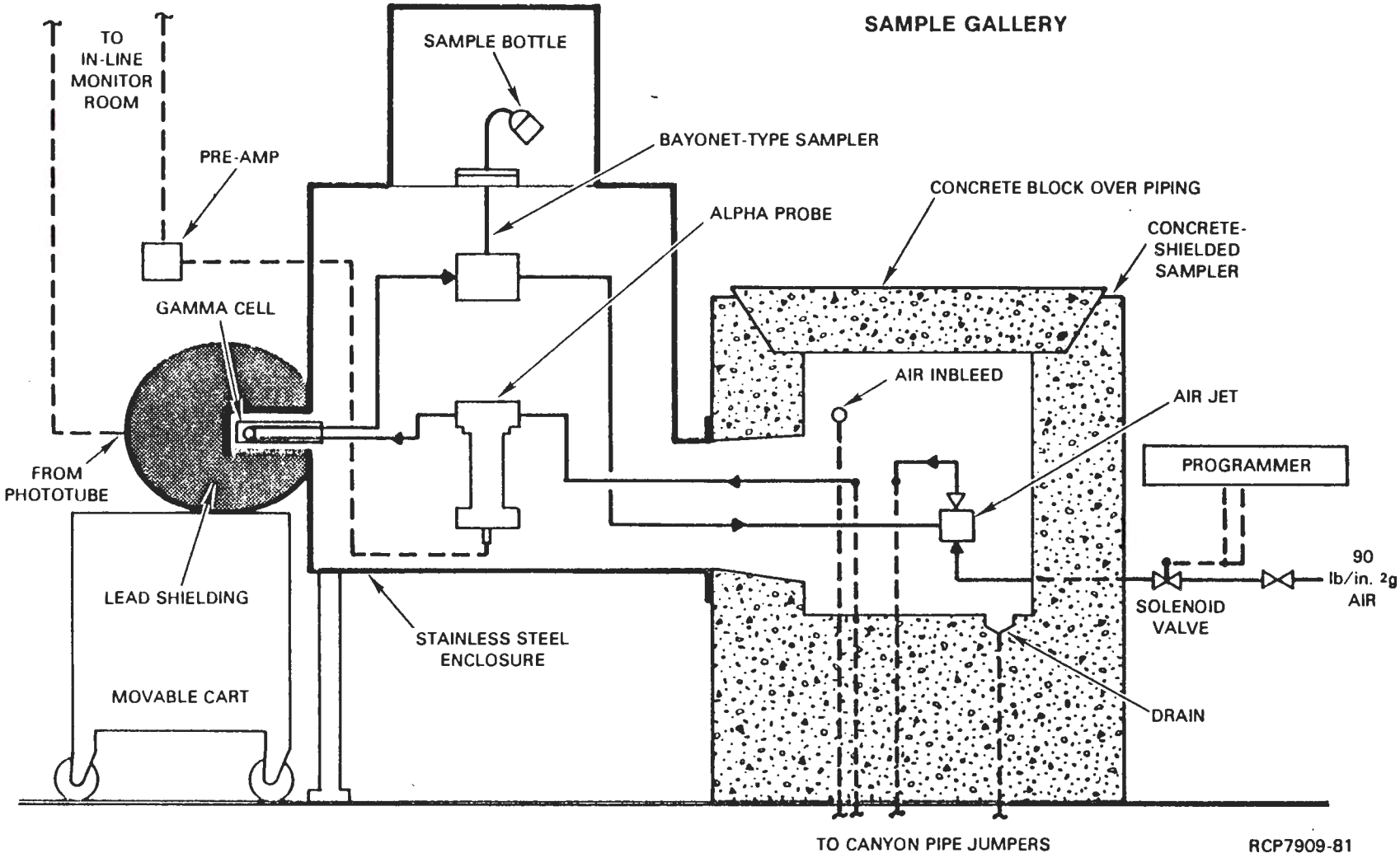

FIGURE 6-64. Gamma and Alpha In-Line Monitors--Sample Stations.

Alpha monitors are used to measure plutonium concentrations in several process streams. Each consists of a cell enclosing a scintillator. The scintillator is a glass disc with a cerium-activated surface. The glass crystal is in contact with the process solution. The alpha monitors are used to control plutonium recycle to the backcycle waste system via aqueous waste streams from the second and third plutonium purification cycles. The alpha monitors are also used to monitor plutonium product stream concentrations in the plutonium purification cycles. The calibration of the monitors is based upon laboratory results of the current onstream samples. Fuel is processed in distinct campaigns. All fuel processed in a particular campaign is of similar exposure. Upon starting a new campaign, it is necessary to use anticipated monitor calibrations (based upon past campaigns of similar fuels) until laboratory data from current samples can be obtained.

6.5.1.4.5 Neutron Monitors. Three neutron detector probes are mounted vertically 5 ft apart on the bottom section of the uranium-plutonium partitioning column (1BX, T-J6 column) (Fig. 6-65). This installation provides a continuous, instantaneous indication of the plutonium profile, allowing prompt response to loss of partitioning or plutonium recycle within the column. A fourth detector probe continuously monitors the plutonium concentration in the 1BXP stream. Neutron monitors (one each) are also mounted on the HAF makeup tank (TK-E6), the 1WF tank (TK-F7), the 1BXF tank (TK-J3), and the backcycle waste concentrate receiver tank (TK-J1) to monitor the plutonium content of these vessels. A neutron source and monitor are also mounted on the cadmium nitrate makeup tank (TK-151) to monitor the cadmium nitrate concentration in the solution used as the motive fluid for jetting highly concentrated plutonium rework solutions to TK-E6.

6.5.2 Nitric Acid Recovery System

6.5.2.1 Functional Description. Nitric acid recovery at the PUREX Plant is accomplished in three separate and distinct facilities which together comprise the acid recovery system. Dilute nitric acid is recovered from the DOG in the 293-A backup facility and from the high-level waste in the waste treatment system, and these dilute acid solutions are combined and concentrated to about 50 wt% in the vacuum acid fractionator (206-A).

The oxides of nitrogen generated during uranium fuel dissolution and not absorbed in the downdraft condensers are recovered as dilute nitric acid in the backup facility absorption towers. This dilute acid is transferred batchwise to the acid accumulator vessel in the waste treatment system.

Nitric acid is recovered from the solvent-extraction waste by evaporation and denitration, followed by absorption of the nitric acid vapors and oxides of nitrogen from the offgases.

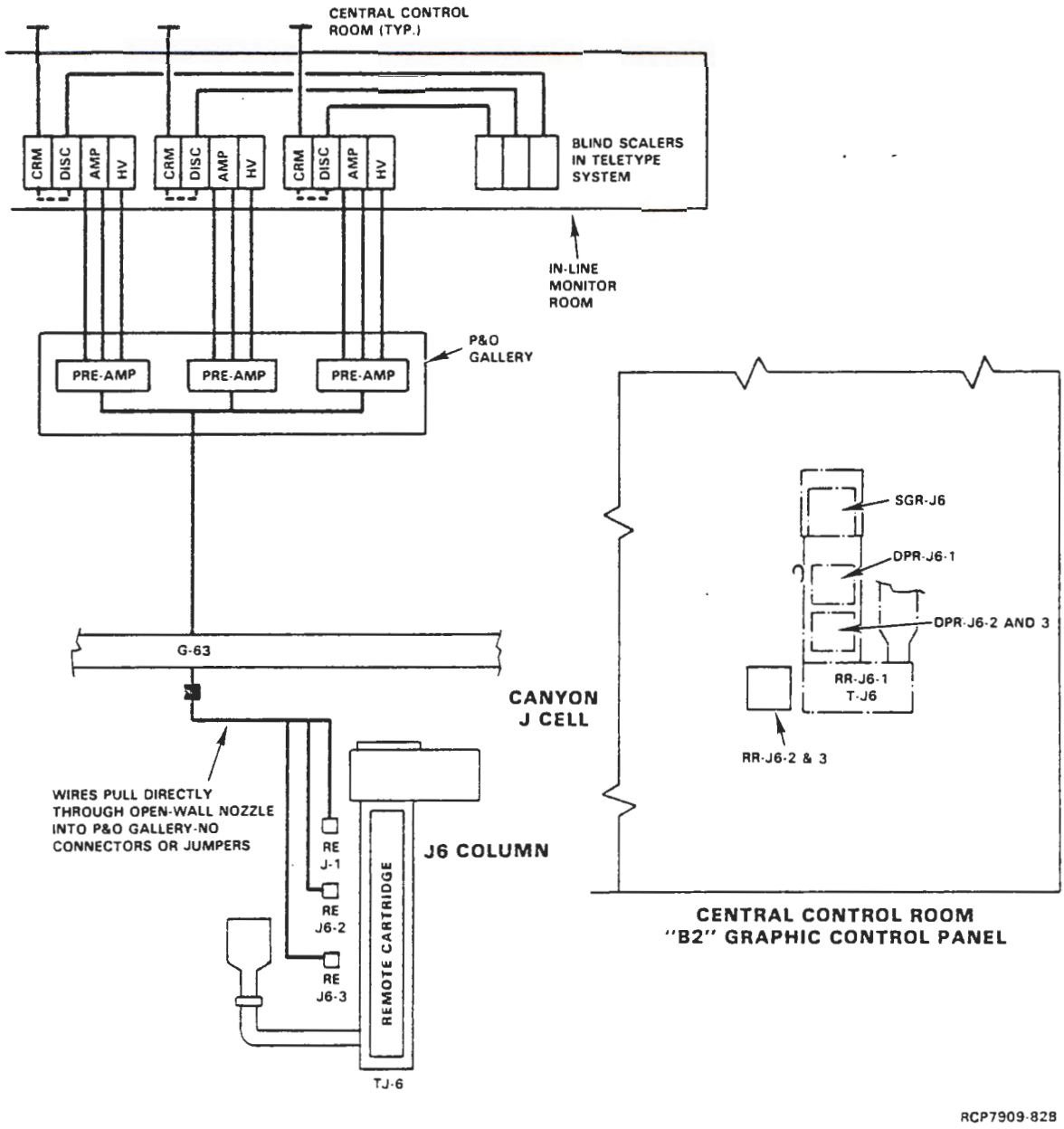

FIGURE 6-65. Neutron Monitors (J6).

Acid is removed from high-level waste by continuous evaporation in the E-F6 concentrator. Feed solution (1WF) is continuously fed to the concentrator, while vapor (AAF) is continuously removed, and liquid (1WW) overflows from the concentrator at a constant rate to produce an acceptable high-level waste concentration. The vapor exiting the concentrator (AAF) passes upward through deentrainment pads, then to the acid absorber (T-F5).

In the acid absorber (T-F5), nitric acid is recovered at a concentration of about 15 wt% by an absorption (enriching) process involving countercurrent contact of the vapors with a reflux stream of water.

The concentrator bottoms stream (1WW) is reacted with sugar to destroy the residual nitric acid and some of the nitrate ion in solution and, thus, reduce the amount of caustic required for pH adjustment. The offgases from the sugar denitration reaction are also routed to the acid absorber, where about 50% of the contained oxides of nitrogen are recovered as nitric acid.

The dilute acid recovered from the waste treatment process is combined with the dilute acid from the backup facility and transferred to the vacuum fractionator facility in 206-A for final concentration to about 50 wt%.

6.5.2.2 Major Components.

- Dissolver NO_x Recovery Facility

  The DOG treatment facility, 293-A or backup facility, is a reinforced concrete structure south of the east portion of the 202-A canyon, as shown in Figure 6-66. The structure houses two absorber columns in cells above grade and two pump tanks in cells below grade. In addition, there is a below-grade room containing valving and piping associated with routing dissolver gas through the two absorber columns and for bypassing the absorbers.

  The room also contains the steam jets used to maintain vent vacuum on the respective dissolver. The 293-A facility has its own control room, which serves primarily to house instrument signal transmitters. Instrumentation recorders and other readout instrumentation are located in the headend control room.

  Two absorbers (T-XA and T-XB) for recovering nitric acid are located in the 293-A building. The XA absorber, shown in Figure 6-67, is a 6-ft-diameter by 22-ft-high column containing eight trays. Each of the top five trays holds thirty-three 6-in. bubble-caps, while the bottom three trays contain twenty-seven 6-in. bubble-caps. Bubble-caps are constructed from 6-in.-OD caps with serrated edges set over 4-in.-OD by 2-3/4-in.-high risers. Each tray also has an overflow weir 2-3/4 in. high.

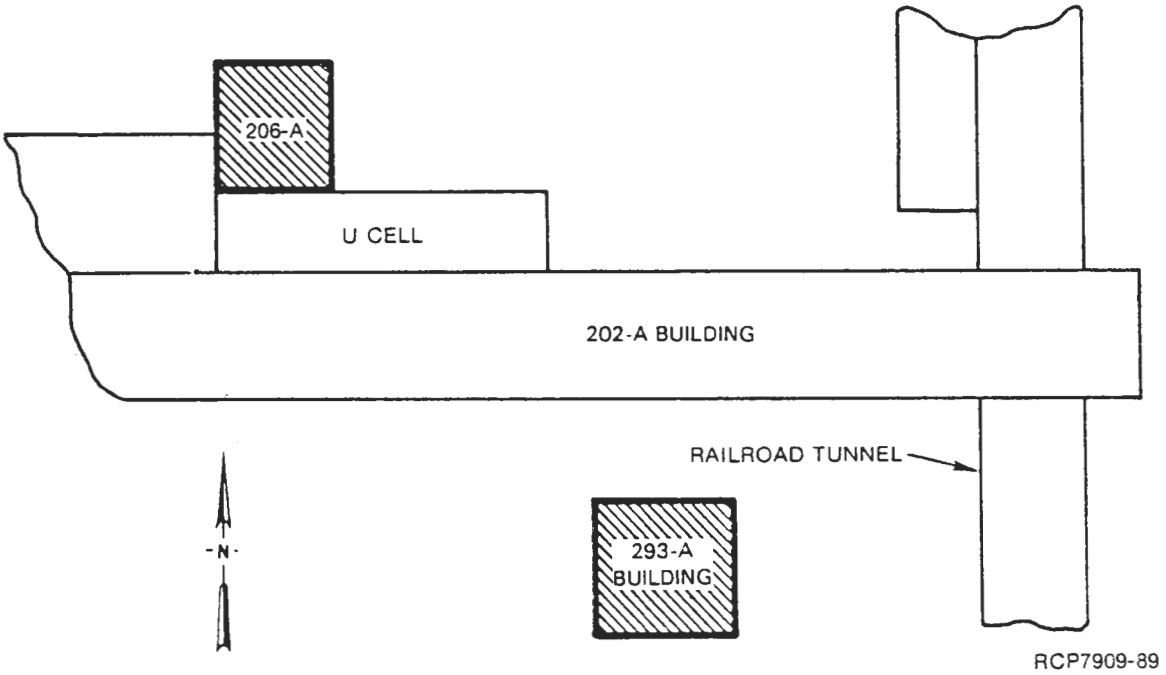

FIGURE 6-66. Location of the 206-A and 293-A Facilities.

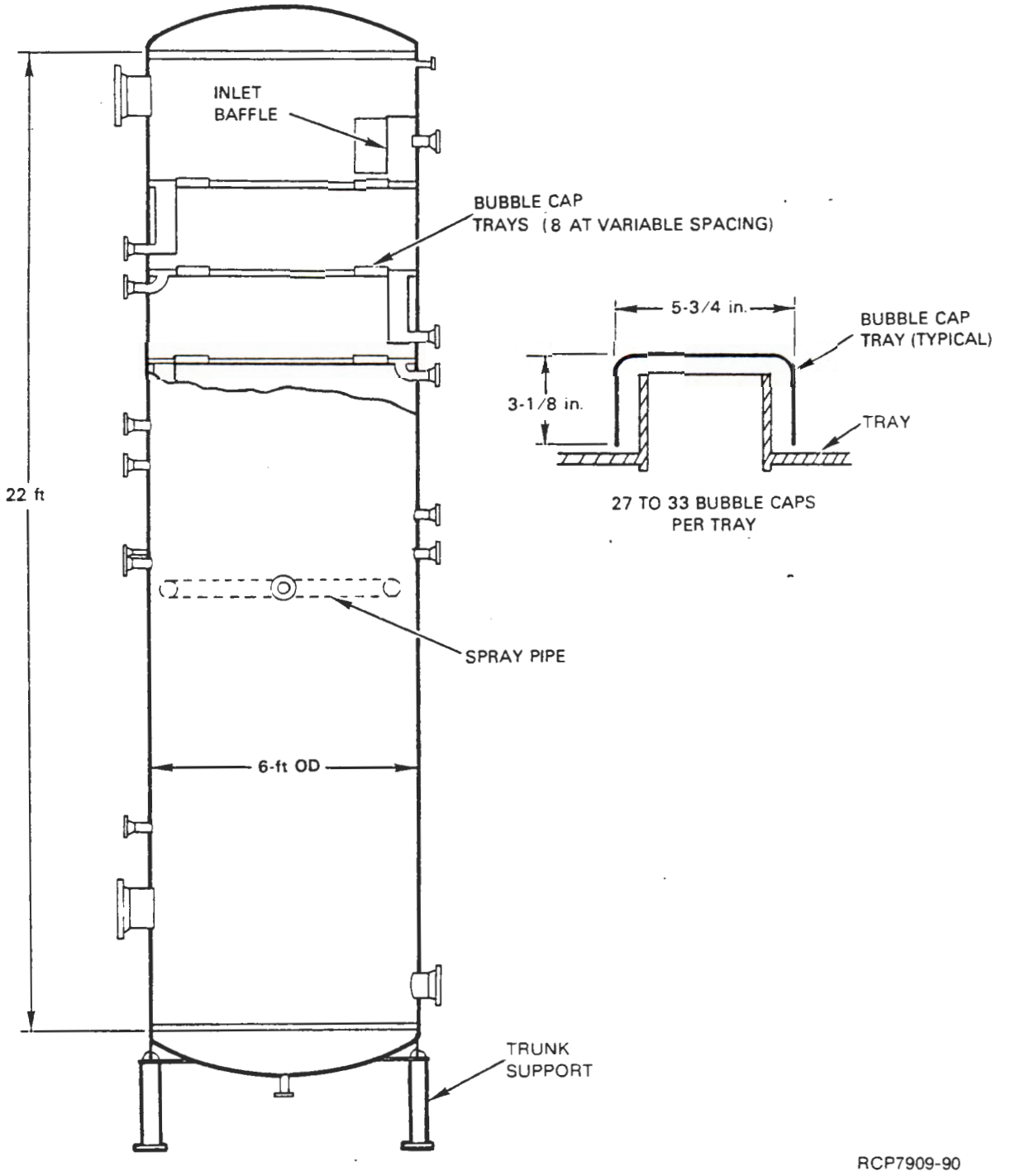

FIGURE 6-67. T-XA Tower.

The XB absorber, as shown in Figure 6-68, is a 4-ft 6-in.-OD by 20-ft-high column with eight trays spaced 2 ft apart. Each tray contains twenty-two 6-in. bubble-caps set on a 4-in.-OD vapor riser, and a 1-1/2-in.-high overflow weir. The XB column is a simple counter-flow absorber with liquid entering at the top and gas at the bottom.

The XA and XB acid absorbers are fabricated from Type 304L, stainless steel and designed for contact maintenance. The design data* used to construct the XA and XB columns follow:

- Design pressures, full of liquid and 1/2 lb/in.^{2} g vacuum
- Design temperature, 150°F
- SG of contents, 1.2
- Corrosion allowance, 0.06 in.
- Specification, HWS-5776, Revision I.

Tanks XC and XD are 5,000-gal and 3,000-gal capacity, respectively. Each is equipped with two pumps and liquid-level, SG, and temperature instrumentation. Tank XD is equipped with a cooling coil, but the contents of the XC tank are cooled chiefly by the reflux flow heat exchanger before entering the tank.

In the towers, the oxides of nitrogen are contacted with recycled 12 wt% nitric acid and water solution to produce nitric acid. Water is added to the columns at a rate which maintains the acid concentration at about 12 wt%. Hydrogen peroxide is added to oxidize nitrous acid to nitric acid. Solution from the towers are collected in individual tanks, from which the bulk of the solution is recycled back to each tower. The recycled solution provides the cooling capacity necessary to maintain the optimum absorption capacity. One heat exchanger is used to cool the liquid recycled to tray 3 on the XA column and another heat exchanger is used for interstage cooling of the liquid on the top four trays of the XA tower.

Liquid is taken from a plate, cooled, and routed to the next lower plate. Liquid feed points are located at the top of the XA column and between trays three and four. Gas is fed to the bottom of the XA column, exits from the top, and is then routed to the bottom of the XB absorber.

*Drawing H-2-57002.

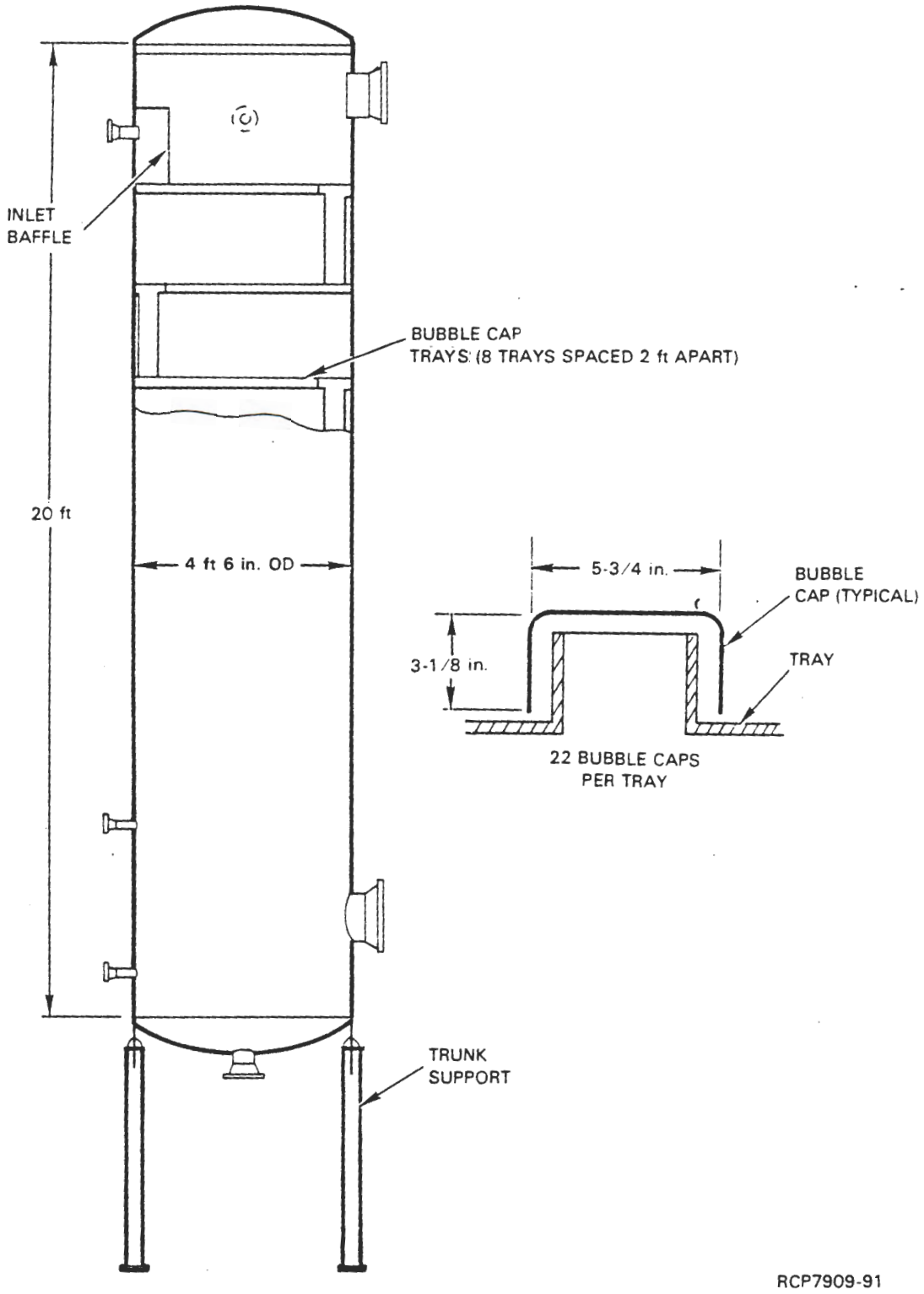

FIGURE 6-68. T-XB Tower.

A liquid bleed stream from the XA acid receiving tank (TK-XC) is sent via TK-F3 and TK-U5 to a vacuum fractionator where the acid is concentrated from 12 wt% to about 50 wt%. Liquid from the XB receiving tank (TK-XD) is sent to the XA receiving tank.

The gas stream leaving the XB tower is sent to the 291-A stack where it mixes with the PUREX building ventilation air and the process ventilation gases before exiting the stack. The oxides of nitrogen emissions will be reduced below the concentration levels permitted by the EPA.(28)

The oxides of nitrogen absorber effluent is not to exceed 2 vol% (dry basis) or 1,160 kg/d of oxides of nitrogen.

The PUREX main stack (291-A-1) is not to exceed 2,250 kg/d or 424 ton/yr of oxides of nitrogen.

- T-F5, Acid Absorber

The acid distilled from the high-level waste and the oxides of nitrogen produced by sugar denitration of the high-level waste are recovered in the T-F5 atmospheric absorber tower (Fig. 6-69).

The absorber is a 20-ft-high tower divided into two sections. The 3-ft 6-in.-diameter lower section, formerly used for fractionation, contains eight trays spaced 12 in. apart. Each tray holds fifty-nine 3-in.-OD bubble-caps set over 2-in.-OD by 2 9/16-in.-high vapor risers, and overflow weirs 1 1/2 in. high.

The upper absorption section of the tower increases in diameter to 10 ft and contains seven trays spaced 12 in. apart. Each tray in the upper section is constructed with 156 5-in.-OD bubble-caps set over 3 1/2-in.-OD by 2 1/4-in.-high vapor risers, and overflow weirs 1 3/4 in. high. Vapor from the waste concentrator enters T-F5 via a 16-in.-diameter line at the bottom of the upper tower section (between trays eight and nine). Absorption water, recycled from the absorber condenser (E-F5), enters the absorber through a nozzle in the top of the tower. Vapor from the absorber leaves the top of the tower through a 16-in.-diameter line.

All parts, excluding external supports, are fabricated of Type 304L, stainless steel.

- Vacuum Fractionator

The fractionator is located in the 206-A structure attached to the north side of the east end of the 202-A building (see Fig. 6-66). The concentrated nitric acid receiver-pump tanks are located in the nearby, below-grade, U cell.

A flow schematic of the vacuum fractionator and associated equipment is shown in Figure 6-70; the acid fractionator (T-U6) is shown in Figure 6-71.

9413219.1428

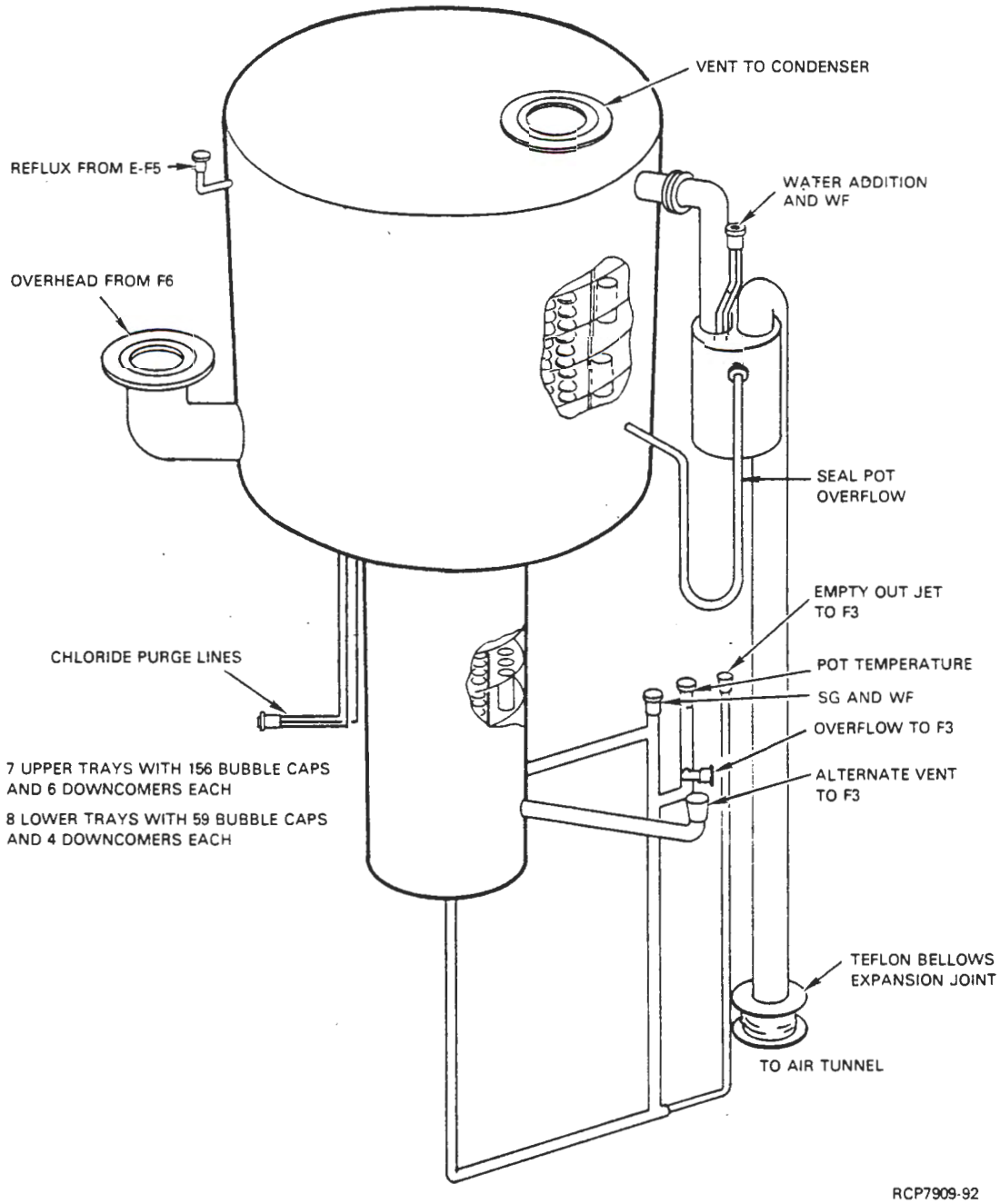

FIGURE 6-69. T-F5 Acid Absorber.

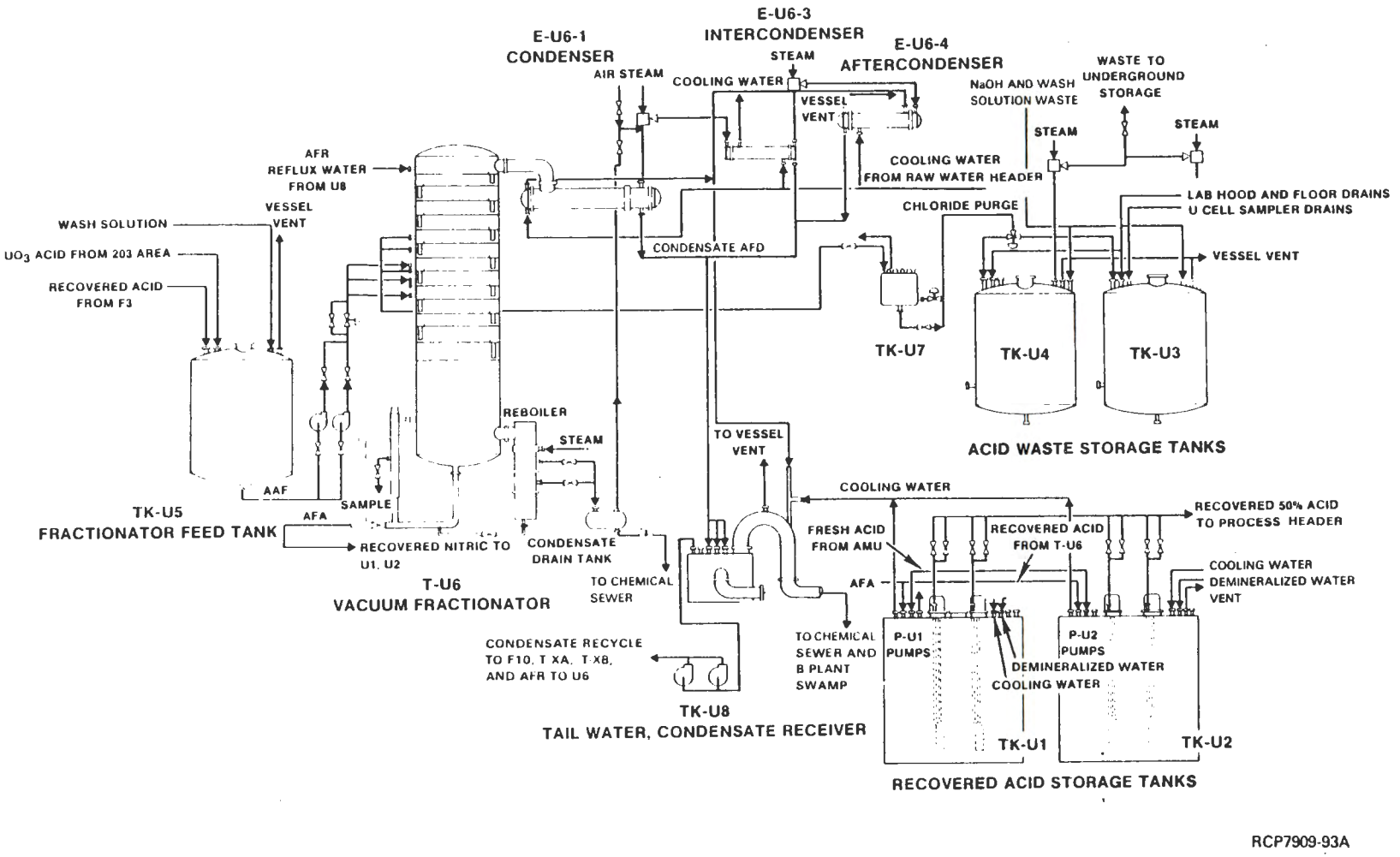

FIGURE 6-70. Fractionator Flow Schematic.

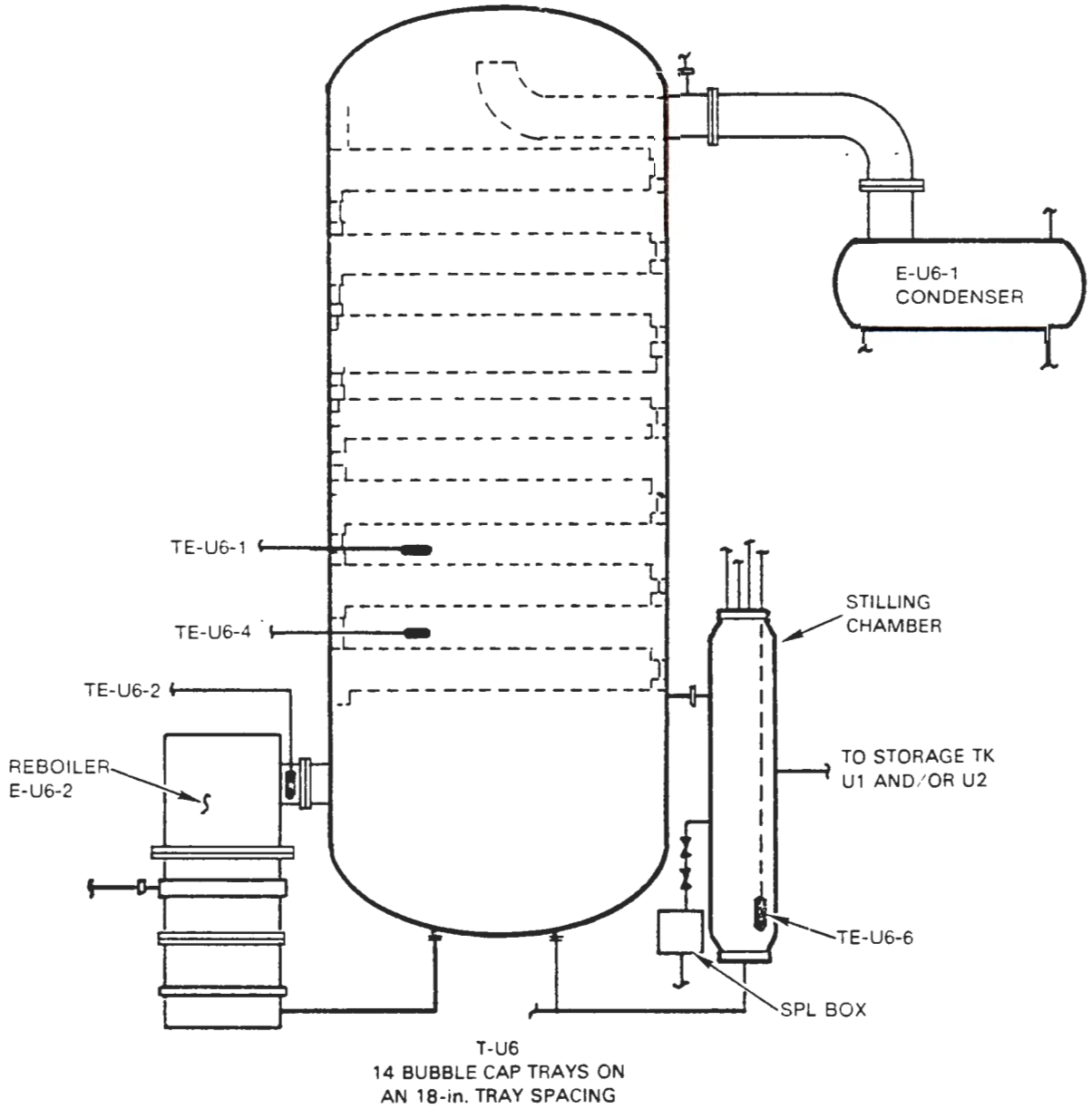

FIGURE 6-71. T-U6 Tower.

The vacuum fractionator consists of an insulated tower, 8-ft-OD and about 35 ft high, fabricated from 3/8-in.-thick plate. The tower is enclosed by dished heads and contains 14 trays spaced 18 in. apart. Each tray has 86 bubble-caps located on an 8-in. equilateral triangular pitch. The bubble-caps are 6 3/4-in.-OD surmounting 4 3/4-in.-OD risers.

The contact maintained fractionator was fabricated from Type 304L, stainless steel. The design data used in the construction of the unit follow:

- Design pressure, full vacuum
- Operating pressure, 100 mm mercury
- DP, 30 to 35 in. WG
- Design temperature, 205°F
- Operating temperature, 125°F (top) and 170°F (bottom)
- Reboiler heat transfer coefficient, 218 Btu/hr-ft^2 -°F
- Corrosion allowance, 0.06 in. (all surfaces).

Liquid feed from TK-U5 enters the tower through one of three lines which feed trays 8, 9, and 10, respectively. Liquid leaves the tower via one of two nozzles at the bottom, such that a portion of the liquid turns to the reboiler and the remainder goes to the product tank (TK-U1 or TK-U2).

The reboiler, shown in Figure 6-71, is a vertical, 42-in.-ID, cylindrical vessel. Condensing steam on the outside of 558 1 1/4-in.-OD tubes on a 1 9/16-in. equilateral triangular pitch supplies the heat for fractionation.

Vapor from the reboiler enters the fractionator through a 24-in.-diameter nozzle at the bottom, and vapor leaves the tower to condenser E-U6-1 passing first through a demister and then through a 24-in.-diameter nozzle at the top.

Four drain lines for purging chloride-bearing nitric acid from the fractionator are located under trays 6 to 9, respectively, and exit through the side of the tower. The vacuum fractionator (T-U6) has three condensers (E-U6-1, E-U6-3, and E-U6-4) to handle the offgas. Condenser E-U6-1, in addition to handling offgases, is used for evacuating T-U6 to about 100 mm mercury. This lowers the required temperature and minimizes corrosion of the T-U6 vessel. The three condensers are connected in series with E-U6-1 attached to T-U6 and followed successively by E-U6-3 and E-U6-4. Overhead vapor from the vacuum fractionator is condensed in E-U6-1, while steam from the two-stage jet-vacuum system for the fractionator is condensed in E-U6-3 and E-U6-4.

Condenser E-U6-1 (see Fig. 6-71) is about 19 ft long and 42 in. in diameter. Fractionator overheads enter the condenser through a 24-in. nozzle near the end of the shell. Inside the shell, the vapors contact a tube bundle containing 1,246 horizontal tubes 3/4 in. in diameter, which carry cooling water. The water makes six passes before it discharges to the cooling water header.

6.5.2.3 Safety Criteria and Assurance. There are no special personnel, process, or criticality hazards associated with operation of the dissolver oxides of nitrogen recovery facility, acid absorbers, vacuum fractionator, or other U cell equipment, with the exception of the laboratory waste receiver tanks (TK-U3 and -U4) and the handling of hydrogen peroxide. The fissile content of the process samples handled in the laboratory during the time required to accumulate a batch of waste in the U3/U4 tanks would not normally exceed the vessel mass limit of 500 g of plutonium. In addition, however, administrative controls restrict the type of waste discharged to those tanks. Chemical hazards of hydrogen peroxide are discussed in Section 5.3.3.3. Adequate protective clothing, handling precautions, and procedures are available to assure safe handling of this material.

As discussed in Section 7.5.1.3.4, the high-level waste sugar denitration process could possibly produce a violent reaction. This reaction could result in pressurization of the vessel or exceed the capacity of the offgas nitric acid scrubbing system.

To prevent uncontrollable evolution of gases, electrical interlocks are used. These interlocks prevent the addition of sugar to the waste denitration tank if the solution temperature is low (92°C) or if the tank is pressurized. Sugar is not added until the plutonium content is determined through sample analysis and found to be less than 500 g.

The process hazard analysis for nitric acid recovery is given in Table 6-32.

6.5.2.4 Operational Control Systems--Recovered Nitric Acid System. The recovered nitric acid concentration is maintained at about 50%. Adjustments are made, as necessary, on the vacuum fractionator operation to assure proper concentration.

Recovered nitric acid is recycled to process dissolvers and streams: HA column scrub (HAS), 1BX column plutonium product (1BXP), 2D column feed (2DF) and concentrated backcycle waste (3WB). The primary limitations on use of recovered nitric acid result from either FP or chemical contaminants. This effectively precludes its use in the third plutonium system and in the cold chemical makeup areas. A summary of the off-standard operating conditions is presented in Table 6-33.

TABLE 6-32. Process Hazard Analysis--Nitric Acid Recovery.

System or subsystem	Energy (hazard)	Unwanted energy flow (incident)	Consequence (immediate and/or secondary	Barriers (design, administrative, safety devices, etc.)
HNO_3 recovery				
General	F ion (F^-)	No ANN to T-F5	U6 corrosion; equipment damage Activity release to sewer	F analysis of U1 and U2
	HNO_3	Corrosion, ingestion, contact	Equipment failures; personnel injury	57 wt%; acid suits
293-A dissolving	NO_x, I_2	Absorbers offgas emission	Emission from stack	Visual appearance of plume; standard operating procedures
	HNO_3	Corrosion, ingestion, contact	Equipment damage; personnel injury	Administrative procedures; acid suits
	H_2O_2	Ingestion, contact	Personnel injury	Administrative procedures; acid suits
293-A decladding	NH_3	Bypass valves fail	Ammonia nitrate formed in recovered acid; filter plugging	Vacuum gauge on 293-A; NH_3 scrubber
Sugar denitration	Vigorous exothermic reaction	Uncontrolled reaction	Pressurization of TK-F15	Administrative procedures; waste at reaction temperatures before starting; low temperature interlock; controlled addition rate

TABLE 6-33. Acid Fractionator--Off-Standard Conditions.

Off-standard condition	How detected	Likely cause	Detection of cause	Remedy
Excessive DP	DP instrument readings	Vapor velocity too high	Same as "How detected"	Reduce steam flow to reboiler; reduce feed and reflux addition rate
Excessive pressure in tower (unable to maintain 100 mm Hg absolute pressure)	Column vacuum (pressure) instrumentation	Loss of cooling water flow to surface condenser; failure of jet ejector system; above-normal air bleed rate; inadequate steam supply	Flow meter on cooling water stream; sudden change in vacuum or inability to initially draw vacuum; air bleed valve loading pressure; inability to maintain steam flow to reboiler and vacuum simultaneously	Restore cooling water flow to condenser; shut down for maintenance; adjust to proper setting; increase total steam supply to fractionator building
Excessive acid in distillate (overheads)	Analysis of the distillate for HNO_3	Low reflux flow rate (AFR); high HNO_3 in bottoms	Flow meter on AFR stream; excess steam flow	Increase AFR to proper flow rate; decrease steam flow
Low acid concentration in product (bottoms)	SG reading of stilling chamber; analysis of TK-U1 or TK-U2	Control system failure; feed rate too high (AFF); steam flow rate too low; high reflux-to-feed ratio	Failure of involved instruments; AFF flow meter; reboiler steam flow meter; AFR and AFF flow meters	Repair instruments; decrease feed (AFF) rate; increase steam flow to reboiler; decrease reflux (AFR) rate
Excessive corrosion	Corrosion products in TK-U1/U2 samples	Fractionator operating at a higher pressure than normal	Column vacuum instrumentation	Increase vacuum to proper setting
Cl^- accumulation (not likely to occur)	Analysis of material on Cl^- purge plates	See "Excessive corrosion"	Same as "How detected"	Purge affected plates

6.5.3 Building Sumps

This section covers building sumps which collect leakage, spillage, and spray water or acid.

6.5.3.1 Major Components. There are four types of process sumps: general canyon sumps, deep sumps (SH and SJ2), plutonium cycle sumps (SLK and SLL), and glovebox sumps.

The general canyon sumps are pits in the cell floors, 24 in. by 24 in. by 18 in. deep. The cell floors slope to the center of the cell to an 8-in.-wide trough which slopes to a second trough; the second trough is perpendicular to the center trough, is 8 in. wide, and drains to the cell sump. The SJ and SK sumps are filled with acid-resistant grout to reduce the depth to 8 in.

The deep sumps (SH and SJ2) are pits in the cell floors, nominally 8 ft by 10 ft by 5 ft deep, installed after the completion of the building construction to accommodate longer solvent extraction columns in the H2 and J2 locations. The deep sumps are separated from the cell floor by a 6-in.-high concrete curb.

The plutonium cycle sumps (SLK and SLL) are in the center of L cell and are separated by the partition wall between the T-L2 and T-L3 positions. The SLK sump is a narrow, 1 1/2-in.-wide trough running longitudinally down the center of the cell, sloped toward the partition. The trough in the SLL sump is filled with stainless steel rods, except for a short length to accommodate WF and solution transfer dip tubes, so that the sump is basically the sloping floor.

The glovebox sumps in the PR room, N cell, and Q cell are the floors of the gloveboxes. The L9, L10, and L11 gloveboxes in the PR room are equipped with drain lines extending into L cell. The plutonium solution loadout head tank (L13) glovebox drains to the SLL sump. The loadout hood sump is equipped with a vacuum transfer line to TK-L11. The loadout hood also has criticality drain to the PR room floor. The N cell solution glovebox sumps are equipped with vacuum transfer lines to TK-L11 and common drains to the SLL sump. The dry gloveboxes are not equipped with drains.

6.5.3.2 Nuclear Criticality Prevention. The safety of the general canyon floor and/or sumps is assured by restricting the mass and concentration of fissile material in the vessels above each sump and by restricting the depth of solution on the canyon floor whenever necessary.

In all cases involving the general sumps, the plutonium concentration above these sumps is limited to an effective concentration of less than 6 g/L. Rework plutonium solution may be sent to TK-E6 at concentrations greater than 6 g/L; however, the plutonium solution must be poisoned with cadmium nitrate so that the equivalent reactivity is less than 6 g plutonium/L. In addition, the material is immediately diluted to less than 6 g plutonium/L upon receipt in TK-E6.

For solutions with a potential plutonium concentration between 3.6 and 6.0 g/L, the solution depth is restricted to 12.6 in. above the sump trough. If a single vessel were to leak solution to the floor and the plutonium precipitated, no criticality would occur. Vessels TK-D3 and -D4 have the largest finite plutonium mass limit of the PUREX vessels (16.5 kg) for material with 3% ^{240}Pu. If solution in TK-D3/D4 at a concentration of 6 g/L leaked into either a dry sump or a pool 12.6 in. deep and precipitated, it would still be safe as shown in the following.

- TK-D3 Contents Leak into a Dry Sump

  A mass of 16.5 kg of plutonium at a concentration of 6 g/L (the maximum allowable concentration in the tank) is contained in a volume of 730 gal. This would fill the 18-in.-deep SD sump and would cover the D cell floor 0.75 in. deep (18.75 in. total) up the wall. If a precipitating agent were added, this would not cause a criticality, because a 24-in.-square, concrete reflected box requires the equivalent of at least 21 in. of 6 g plutonium/L solution (6.4 in. of 20 g plutonium/L after precipitation). If D3 contained material with 12% ^{240}Pu with 3.7M nitric acid, permitting 26.9 kg plutonium to be present, and a similar scenario is considered, the system would be no more reactive. Although the 1,190 gal of 6 g plutonium/L solution would be deeper (about 19.7 in. total), the corresponding critical depth is equivalent to 27 in. of 6 g plutonium/L solution (8.1 in. of 20 g plutonium/L after precipitation).

- TK-D3 Contents Leak into a Pool of Identical Density Solution

  In this case, the TK-D3 solution theoretically remains together as a smaller pool of 6 g/L plutonium solution (spreading and dilution makes it safer). An infinite system with concrete below and water on top requires only 16.8 in. of 6 g/L plutonium (versus about 21.0 in. for the 24-in.-square sump) for criticality to occur upon precipitation. A safe solution depth (75% minimum critical) of 12.6 in. is imposed to protect the facility from this error.

  For the 3.7 g plutonium/L solution, the 75% minimum critical depth, subsequently precipitated to the optimum concentration, is 26 1/4 in. The canyon cells overflow to the adjacent air tunnel at 3/8 in. above the canyon trough (Drawing H-2-58965).

  To exceed this volume in the canyon for any extended period would require an excess of 190,000 gal of solution. Therefore, if no vessel in a cell has greater than 3.7 g/L plutonium concentration, the solution depth restriction is, effectively, removed for that cell. Other than L cell, only J and K cells could have greater than 3.6 g/L. This condition could occur only for abnormal 1BX operation.

If a plutonium-bearing solution leaks from the canyon vessels, the plutonium will normally be retained in solution because of the nitric acid present. However, the acid is gradually neutralized by the alkali present in the structural concrete; therefore, plutonium-bearing solution should not be left indefinitely on the floor.

The PUREX procedures require sump transfers to TK-F18 as soon as practicable. However, each sump transfer to TK-F18 requires foreknowledge of TK-F18 contents (Pu and HNO_3 compositions) and analysis after each transfer for safety and accountability. Accordingly, occasions have existed in which solutions remained above the collection sump level for hours. If such a solution is subsequently found to contain significant plutonium, flushing of the floor must be considered. (Conditions of acidity, plutonium valence state/polymer presence, uranium concentration, and canyon location would be weighed during this flushing evaluation.) There is no restriction on the use of water for firefighting for the cells serviced by the general sumps.

- Deep Sumps (SH and SJ2)

Two 8-ft by 10-ft by 5-ft-deep sumps were constructed to accommomodate the HA and 1A columns (the 1A column was eventually removed and the neptunium solvent extraction package placed over the sump). The SH sump is stainless steel lined with grout filling between the liner and the concrete floor of the cell. The deep sumps are jetted out automatically to the adjacent canyon floor.

Criticality prevention in the deep sumps is dependent upon the vessels above. The HA column contains dilute plutonium mixed with uranium. Leakage of column contents, slowly or not, would not present any criticality hazard because of the presence of uranium with the plutonium and/or the finite plutonium inventory in the column.

The neptunium recovery package (inactive), above the SJ2 sump may also contain a limited mass of plutonium, since it collects neptunium and separates it from any plutonium in the backcycle waste on a continuous basis using a chemical reductant.

Since only about one-third of the 3WB stream flow is routinely routed to the neptunium package, the unusual presence of a significant plutonium concentration entering the package would be observed in J1 sample analyses and acted upon before an unsafe plutonium mass had accumulated in the package. (The neptunium package itself is geometrically favorable, but is restricted to 6 g/L plutonium concentration for sump safety.) There is no restriction on the use of water for firefighting for those cells with deep sumps.

- Plutonium Cycle Sumps (SLK and SLL)

There are three control limits for the SLK or SLL sumps: (1) the maximum concentration of plutonium is limited to 450 g/L; (2) the maximum total mass in any single vessel and the sump below it is limited to 50 kg; and (3) the maximum liquid depth at the edge of the trough is limited to 1 in. when the plutonium concentration is greater than 6 g/L in either a vessel or sump.

When the solution concentrations in the vessels and sump are less than 6 g plutonium/L (based upon sample analyses and no subsequent plutonium addition), the depth is limited by criticality prevention requirements to 12.6 in. The SLK and SLL sumps are connected via the air tunnel at 1 1/4 in. above the lip of the trough of the sump, and the SLL sumps back up into the PR room at 8 7/8 in. above the lip of the trough. This imposes some physical limitation upon sump level, other than criticality. The SLL sump receives process solution not only from the vessels above it, but also from the PR room and N cell gloveboxes. In the case of fire in the cells serviced by the sumps, the quantity of water is restricted, so that the maximum combined volume in sumps SLK and SLL is limited to 5,000 gal (6 in. above the lip of the trough).

- PR Room Sumps

There are three limits for the PR room sumps: (1) the maximum concentration of plutonium is limited to 450 g/L; (2) the combined volume of the SLD sump and TK-L11 above it shall not exceed a safe volume; and (3) the drain or overflow line from the PR room sumps to the canyon must be maintained in freeflowing condition. There are three failures that must occur before a criticality is possible: (1) the sump drain or overflow line would have to be plugged; (2) the combined volume of the sump and associated vessel would have to exceed the safe limit;* and (3) the contents of the vessel would have to drain onto the floor.

The L9, L10, and L13 glovebox sumps (SLF, SLE, and SLB) drain directly to the SLL sump. The TK-L11 hood sump (SLD) must fill to 1 in. prior to overflowing to SLL. This SLD sump, therefore, could collect minor vessel leakage for direct transfer to TK-L11 rather than having to go to SLL and then back to TK-L11. The drain or overflow lines are checked periodically by adding acid to each in the PR room and observing an increase in the SLL WF. A plugged drain or overflow line is an error condition, and personnel do not knowingly add material to the tanks under these conditions.

*The "safe volume" is specified in the criticality prevention specifications.

The L9 and L10 hood sumps (SLF and SLE) are 19 ft long and 18 in. wide, with a slope of 1 in./8 ft. The safe volume for the sump and associated vessel contents in each hood is 27.7 gal, equivalent to a depth of 2.74 in. at the deepest part of the sump. The maximum volume for TK-L9 is 11 gal and for TK-L10 is 14 gal.

The SLD sump beneath TK-L11 is 98 in. long and 18 in. wide, with a slope of 1 in./8 ft. The safe volume for the sump and associated vessel contents is 25 gal (equivalent to a depth of 3.76 in. in the deepest part of the sump). If the maximum operating volume (18.75 gal) of 450 g plutonium/L solution in TK-L11 were introduced into the SLD sump which had solution already up to the overflow depth (about 1 in.), and if the overflow drain were plugged, the system would still be subcritical (k_{eff} less than 0.95). Administrative controls are in place to operate with the sump below the overflow depth. A solution depth monitor activates alarms in the PR room and the dispatcher's office prior to the overflow depth being reached.

The loadout tank (TK-L13) is in a glovebox that has a sump (SLB) which drains to the canyon sump (SLL) via the same header as the L9 and L10 glovebox sumps. Were the drain to be plugged, the maximum volume which could be added to the SLB sump would be equivalent to TK-L13 volume (2.35 gal). The SLB sump, 2 ft-2 in. by 2 ft, slopes two ways to the drain. The 2.35 gal would be contained in about 1.4 in. of depth, which is well below the maximum safe slab thickness.

As mentioned, the loadout hood, which holds the product container, has a sump similar to SLB; however, the solution entering the sump must be vacuum transferred to TK-L11 rather than draining to SLL, as does SLB. The safety of the sump is comparable to an SLB sump with no drain. The maximum volume of process solution which could be added at one time is 2.35 gal; this would result in a noncritical, 1.4-in. depth. Were additional solution to be added (e.g., an open acid flush line), the solution would overflow at a height of 1-1/2 in. via a 1-in.-diameter side port to a drip pan beneath the hood. The maximum depth of solution in the drip pan prior to overflow would be 2 in. (subcritical or 450 g/L of plutonium).

The use of water for firefighting in the PR room hoods (L9, L11, and L13-10) is restricted, so that not more than 20 gal may be on the floor of the hood.

- <u>M Cell Sump</u>

Tanks TK-M3 through TK-M6, each with a capacity of 210L, are located in the M cell enclosure and are used for storing plutonium nitrate solution. The floor beneath the tanks is lined with stainless steel, which extends 8 in. up the walls. The sump is a 3 in. Schedule 40 stainless steel pipe cap, and contains two liquid level detectors. Sump contents are returned to TK-N30 via vacuum transfer.

- N Cell Sump

The wet processing gloveboxes in N cell are provided with 3-in. Schedule 40 stainless steel pipe cap sumps. Each sump is provided with a single level detector. Sump contents, except those from sumps S-N6, S-N53 and S-N-1C (located in the pipe chase) are returned to TK-N30 via vacuum transfer.

Contents of sumps S-N6 and S-N53 are vacuum transferred to TK-N54 in the N6 glovebox for reprocessing in the oxide rework facility.

Vessels TK-N15, -N16, -N21, and -N22 are filtrate and condensate collection tanks, located in the pipe chase. The plutonium content of these tanks is low, and the probability of leakage is slight, since the tanks are of welded stainless steel construction. The sump return line from S-N1C runs to the N7 glovebox, where it may be connected to the S-N7 sump return line for vacuum transfer to TK-N30.

In the event of a major spill, the N cell wet process gloveboxes are interconnected to an overflow system which returns the contents to the SLL sump.

The M and N cell sump routings are shown on Figure 6-72.

6.5.3.3 Operational Control. All of the cell sumps, except SLL and SLK, are jetted to the waste receiver (TK-F18), where the solution is sampled. If it is low in plutonium and uranium product content, the solution is made alkaline and sent to the underground waste tanks. If the liquid contains organic, it is sent to TK-F13, where the solution is washed. The aqueous phase is routed to either TK-F8 or TK-F18, depending upon the uranium and/or plutonium content, and the organic phase is slowly bled into the organic solvent wash tank (TK-G1).

Aqueous material which cannot be discarded to waste is recovered by either transferring it directly to TK-F8 or by transferring it to TK-F13, where the aqueous material is held and subsequently transferred to TK-F8. The solution in TK-F8 is digested at boiling temperature in 2.0M to 4.0M nitric acid for about 21 d, and is then processed by adding small quantities to feed material batches in TK-E6.

The SLK and SLL sump solutions are normally transferred to the geometrically favorable TK-L11. Also, a routing exists to jet from SLK sump to TK-F18. During a flushing operation, if the sump is low in plutonium content (much less than 6 g Pu/L) as measured by a previous TK-L11 sample, the SLK sump contents can be transferred to TK-F18. A routing also exists to transfer the SLL sump to the SLK sump for transfer to TK-F18.

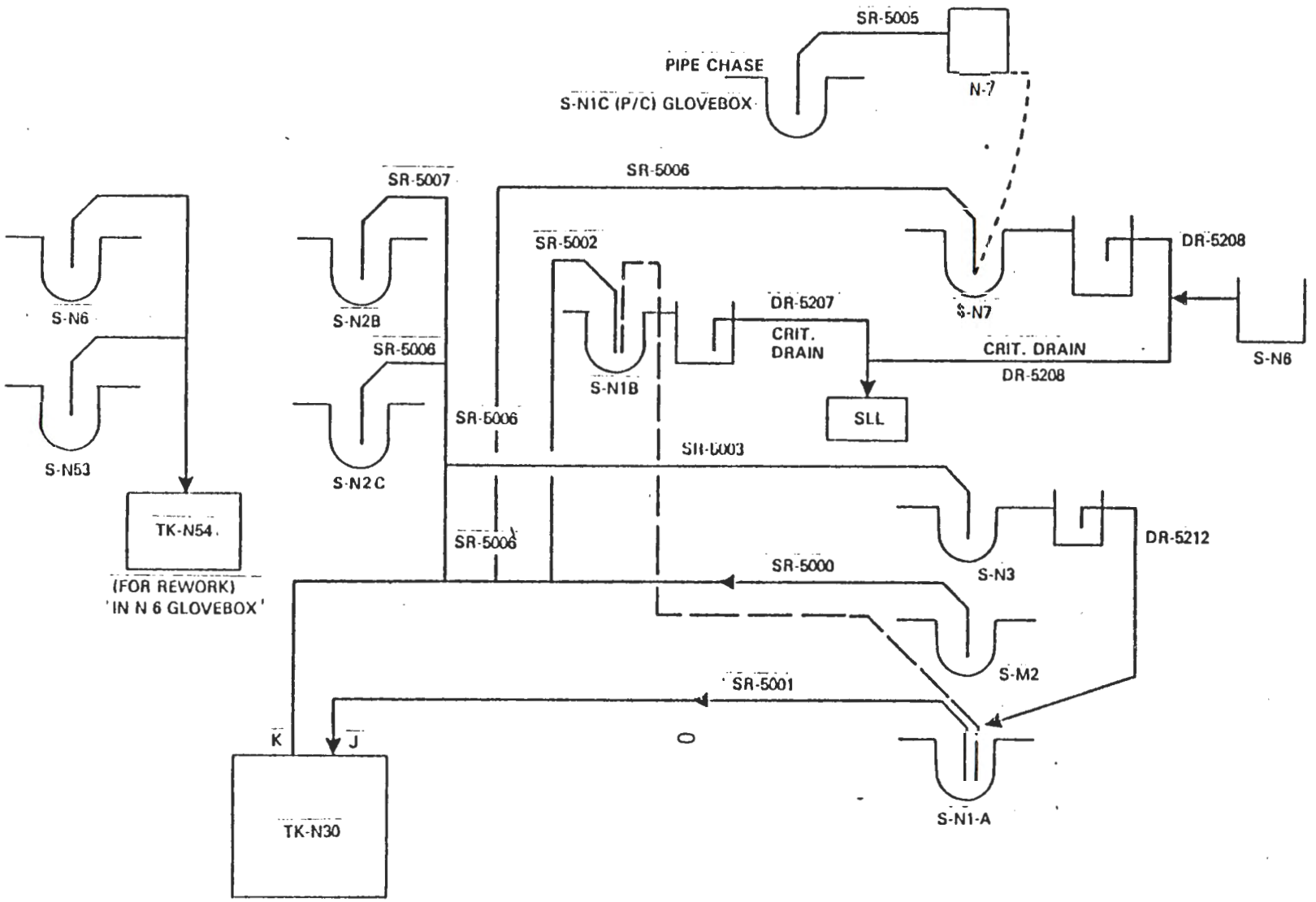

FIGURE 6-72. M and N Cell Sump Routings.

Operational control of the glovebox and hood sumps in the PR room and N cell is comprised of the following elements:

- The liquid levels in the PR room loadout hood and the wet* glovebox sumps in N cell are monitored closely and liquid removed to prevent exceeding the depth limits and/or overflow of plutonium solutions to personnel occupied areas. Monitoring of the SLD (TK-L11) sump is a precautionary measure to prevent exceeding the depth limit in the event the drain to SLL becomes plugged.

- Good housekeeping is practiced in all gloveboxes to maintain the sumps free of solid material that could accumulate plutonium or restrict the drains.

- The combined volume of solution in TK-L11 and the SLD sump is maintained at less than 25 gal.

6.5.4 Utilities and Services

The utilities and services for the PUREX Plant, both externally supplied and internally generated and including the PUREX demineralized and distilled water systems, are discussed in Section 5.4. The process cells are served by drop legs in the P&O gallery from the compressed air, steam, and water headers (discussed previously). Electrical services are routed from motor control centers in the P&O gallery to wall nozzles.

6.5.4.1 Nitric Acid. Fresh nitric acid is received by tank truck and stored in the 211-A tanks. Continuous service is provided for in-line blending via a P&O gallery header from a head tank (TK-222) in the AMU area. A second header supplies intermittent flow for large batch transfers of fresh nitric acid from the 211-A tanks by pumps in the 211-A building.

The PUREX recovered nitric acid is continuously supplied to various cells via an acid header located in the sample gallery. Recovered nitric acid can be replaced with fresh nitric acid by means of interconnections at the various points of supply to process equipment.

Nitric acid recovered at the UO_3 Plant is received at PUREX via tank truck and stored in tanks located in the 203-A facility. This acid is blended with the more dilute acid recovered from the backup facility and the waste concentration step and then concentrated to 10.4M (50 wt%) in the acid fractionator. In addition, the UO_3 acid can be used directly in the process via a separate header system in the P&O gallery. Fresh nitric acid may be added directly to the recovered nitric acid storage tanks to maintain acid inventory.

A schematic of the three acid systems is given in Figure 6-73.

*Those gloveboxes which contain process solutions.

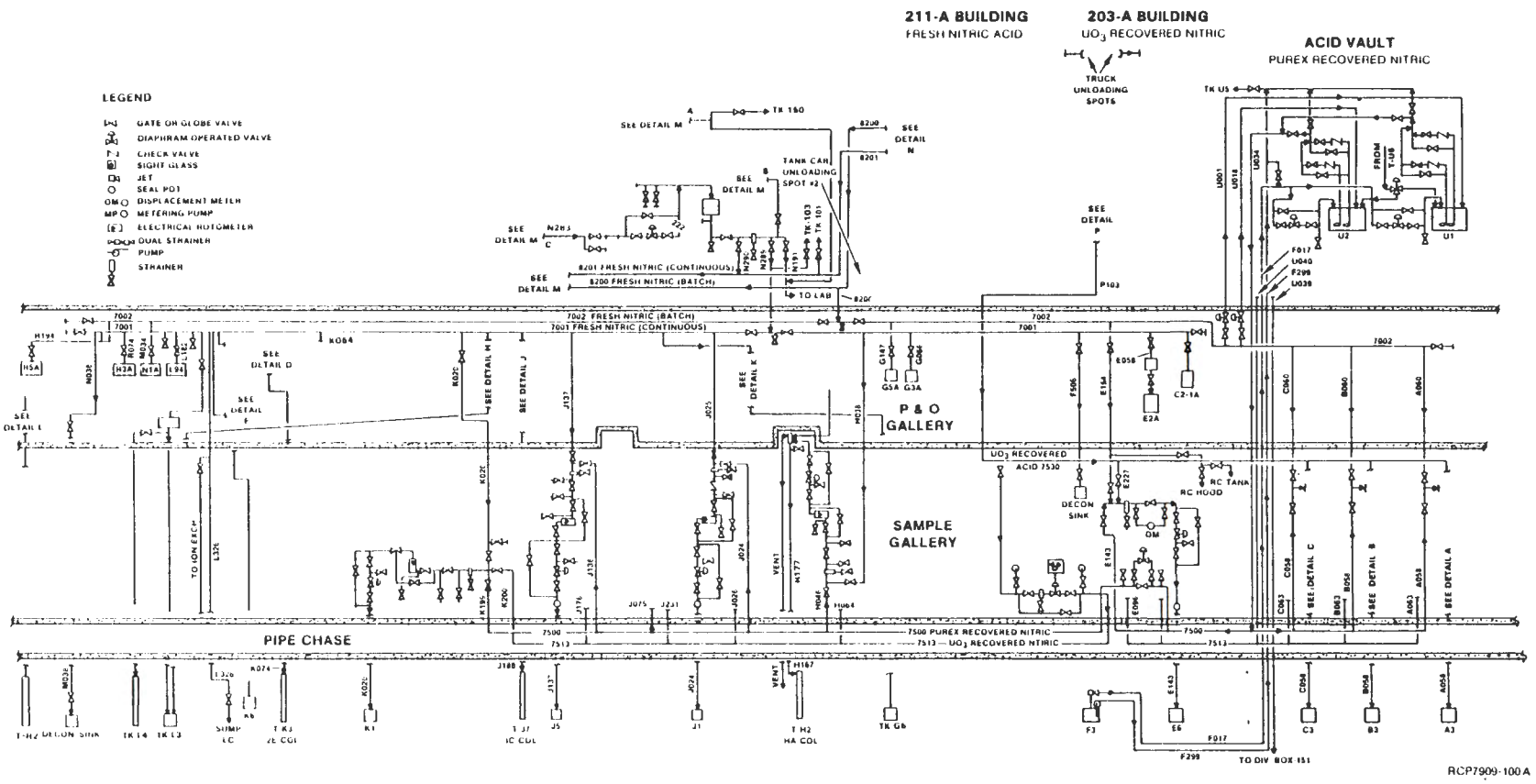

FIGURE 6-73. Nitric Acid System. (Sheet 1 of 6)

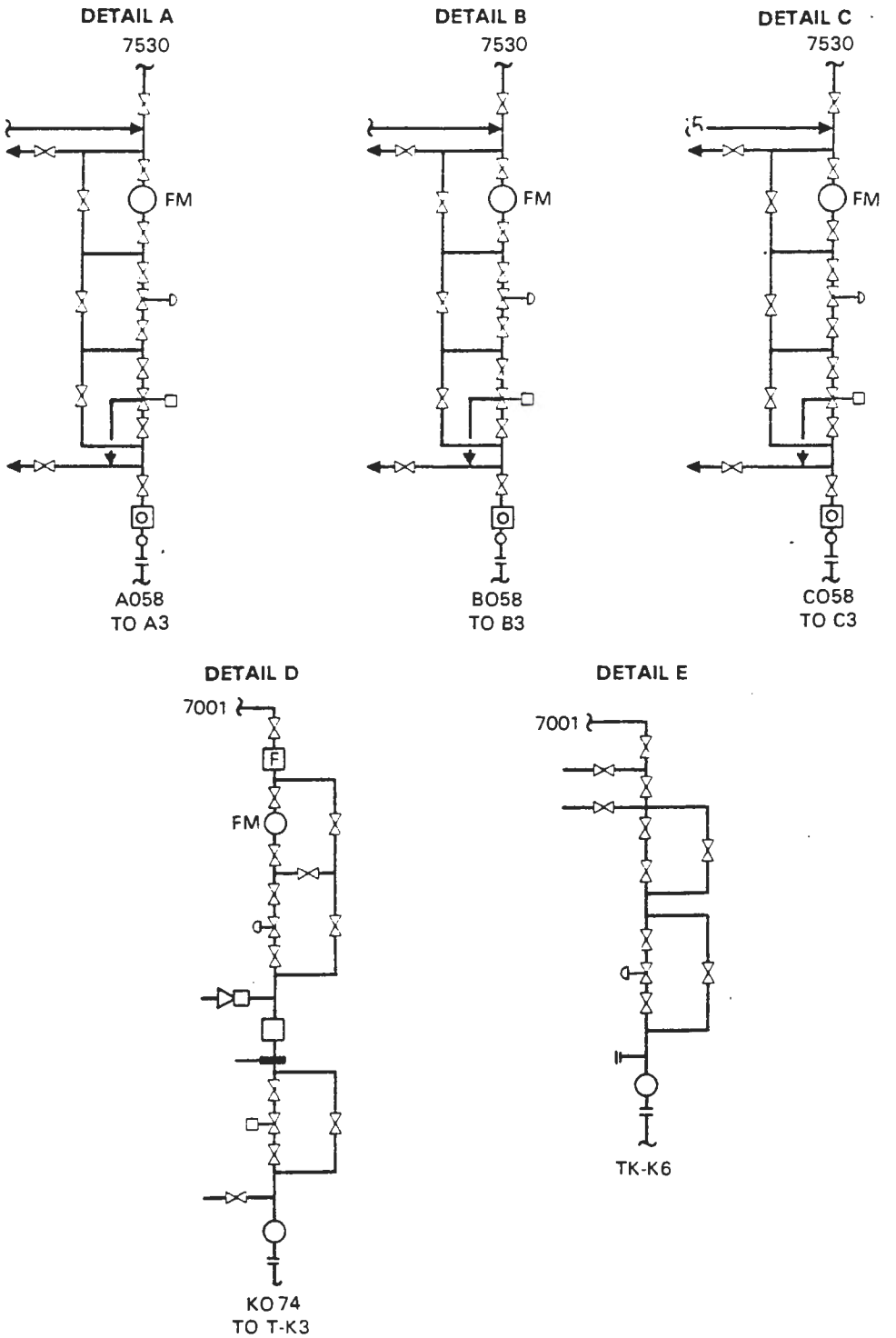

FIGURE 6-73. Nitric Acid System. (Sheet 2 of 6)

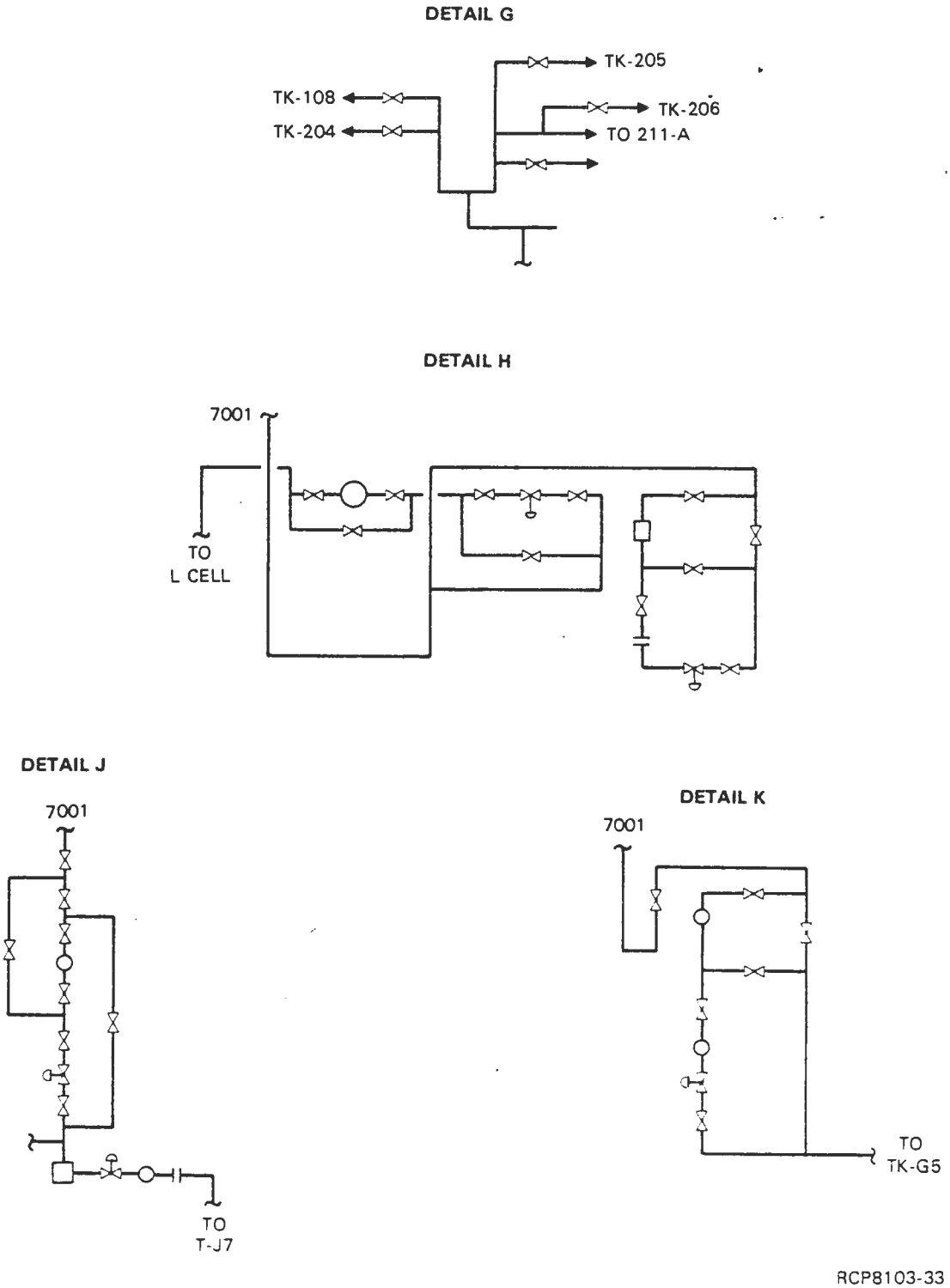

FIGURE 6-73. Nitric Acid System. (Sheet 3 of 6)

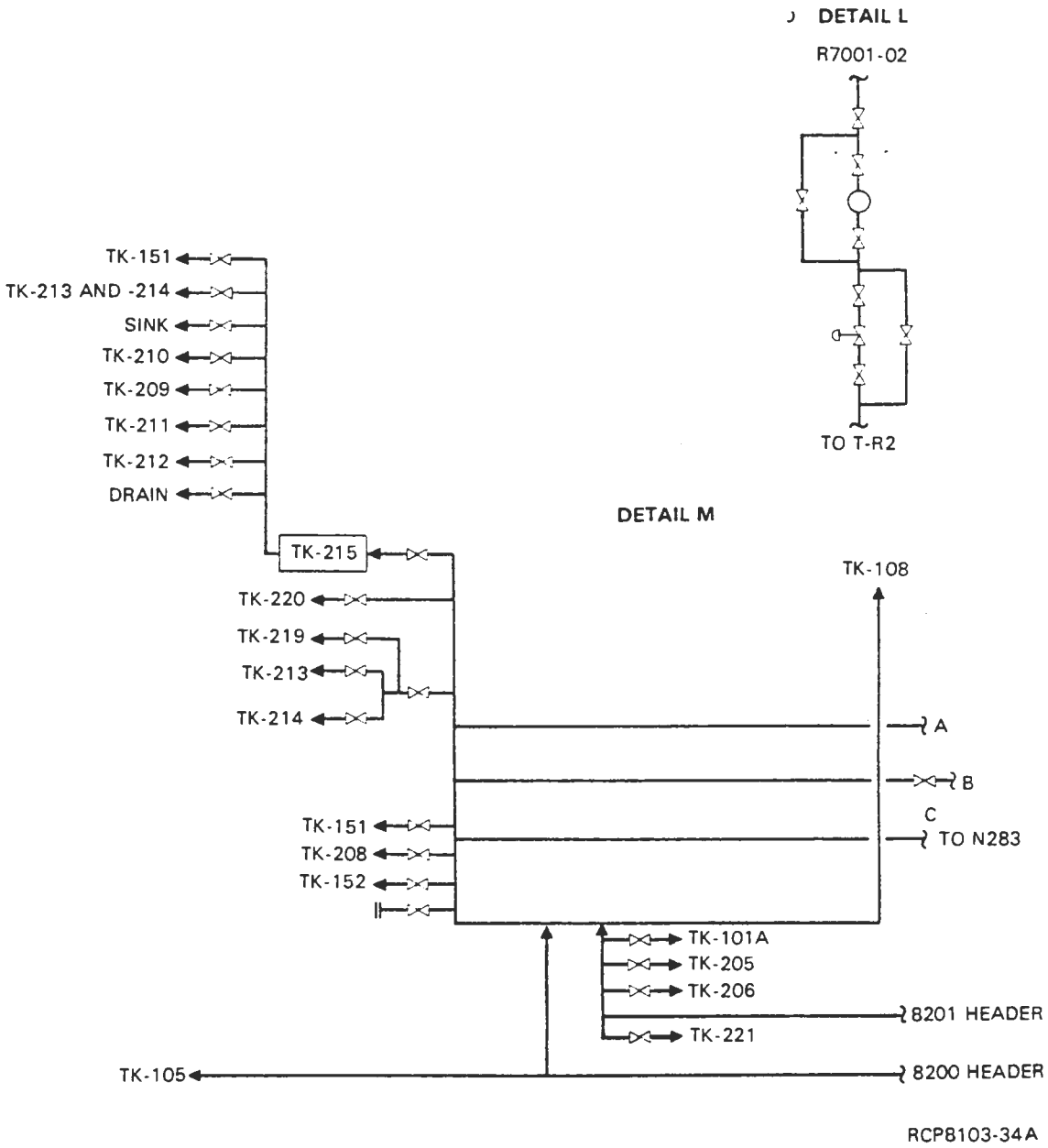

FIGURE 6-73. Nitric Acid System. (Sheet 4 of 6)

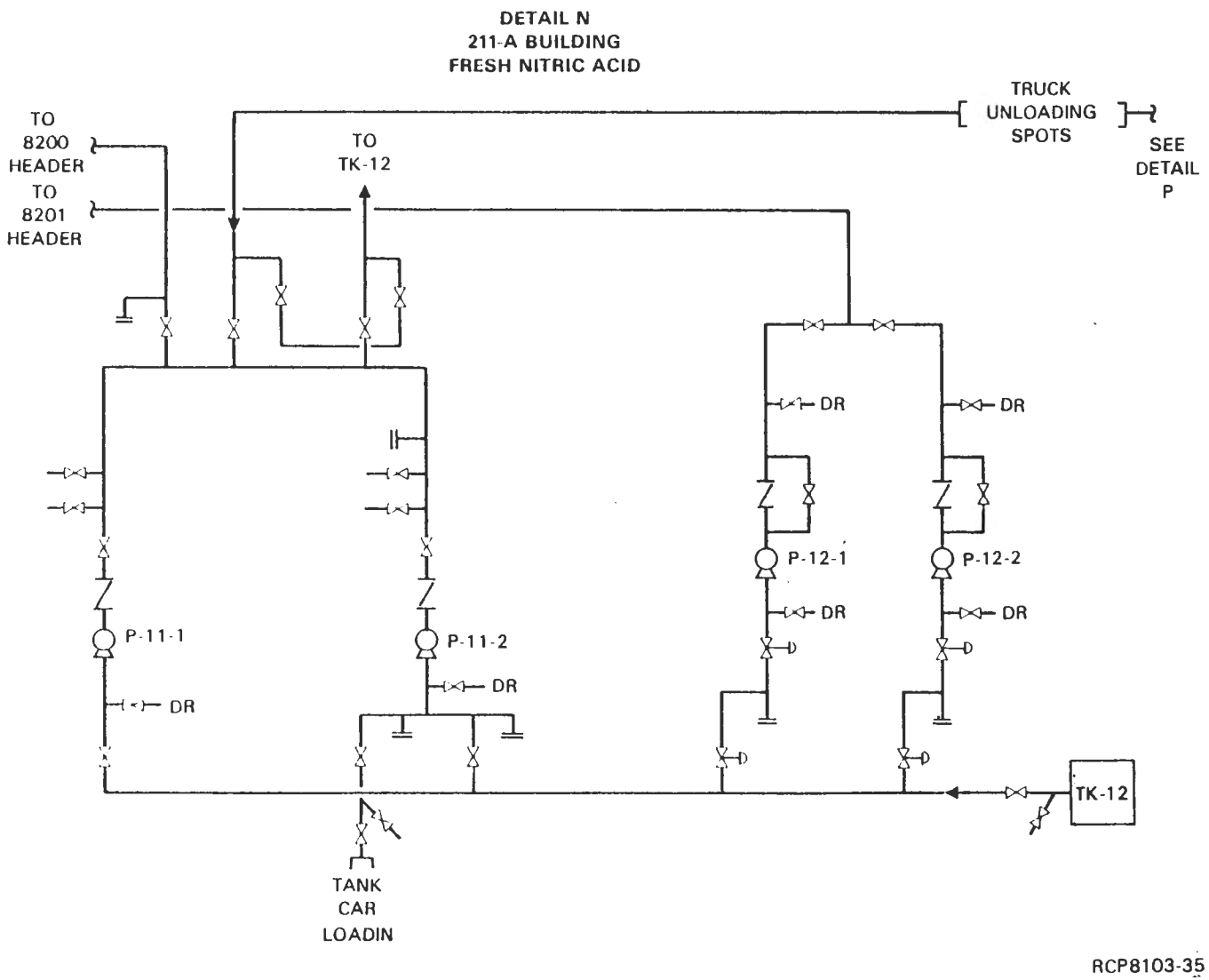

FIGURE 6-73. Nitric Acid System. (Sheet 5 of 6)

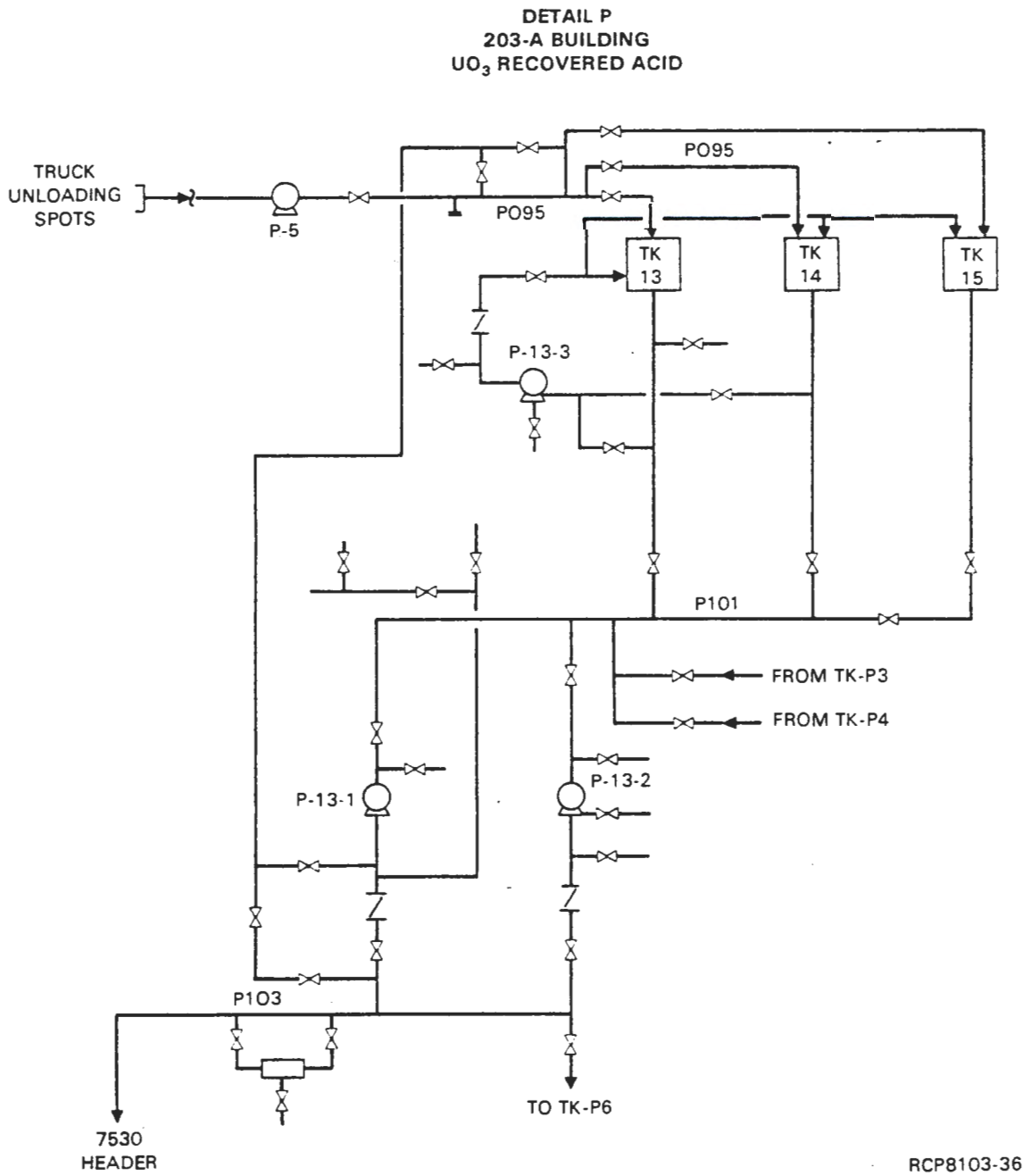

FIGURE 6-73. Nitric Acid System. (Sheet 6 of 6)

6.5.4.2 Solvent Supply System. Fresh diluent (NPH) and solvent (TBP) are received by tank car and unloaded into receiver storage tanks in the 211-A area. Organic additions to the process are by batch makeups in TK-R1A, located in the P&O gallery. Additions to both G and R cells may then be accomplished by appropriate valving of headers from TK-R1A (Fig. 6-74 and 6-75).

6.5.4.3 50 wt% Caustic. Caustic is used primarily to convert waste solutions to the alkaline state. Caustic is also used, in conjunction with other chemicals, as a decontaminant. The 50 wt% caustic is received by railroad tank car and stored in 211-A tanks. The distribution system, shown in Figure 6-76, services the entire process system and AMU area.

6.6 CONTROL ROOMS

6.6.1 Functional Description of Control Rooms

The processing and support or auxiliary operations at the PUREX Plant are largely conducted from five localized control areas: (1) central control room, (2) headend control room, (3) power control room, (4) N cell control rooms (upper and lower), and (5) Q cell control room (inactive). The dispatcher's office serves as a focal point for information transmittal in the plant.

The five control rooms contain graphic panel boards. These panels aid in quick appraisal of process conditions by displaying the various pieces of operating equipment with interconnecting flow lines in the correct, relative positions. The control instrumentation is graphically represented at the point where the corresponding control of the process is actually effected.

The control rooms provide for centralized control of the diverse plant operations. The headend control room is used for fuel dissolution, feed preparation, acid recovery, and other related batch operations. The solvent extraction and most continuous chemical processing operations are controlled from the central control room. The control rooms for N and Q cells provide protected, centralized control of the plutonium conversion and the neptunium purification facilities, respectively. These two control rooms are located below grade near the actual operation. The power control room provides control of the basic utilities for the plant such as ventilation, water, steam, and compressed air.

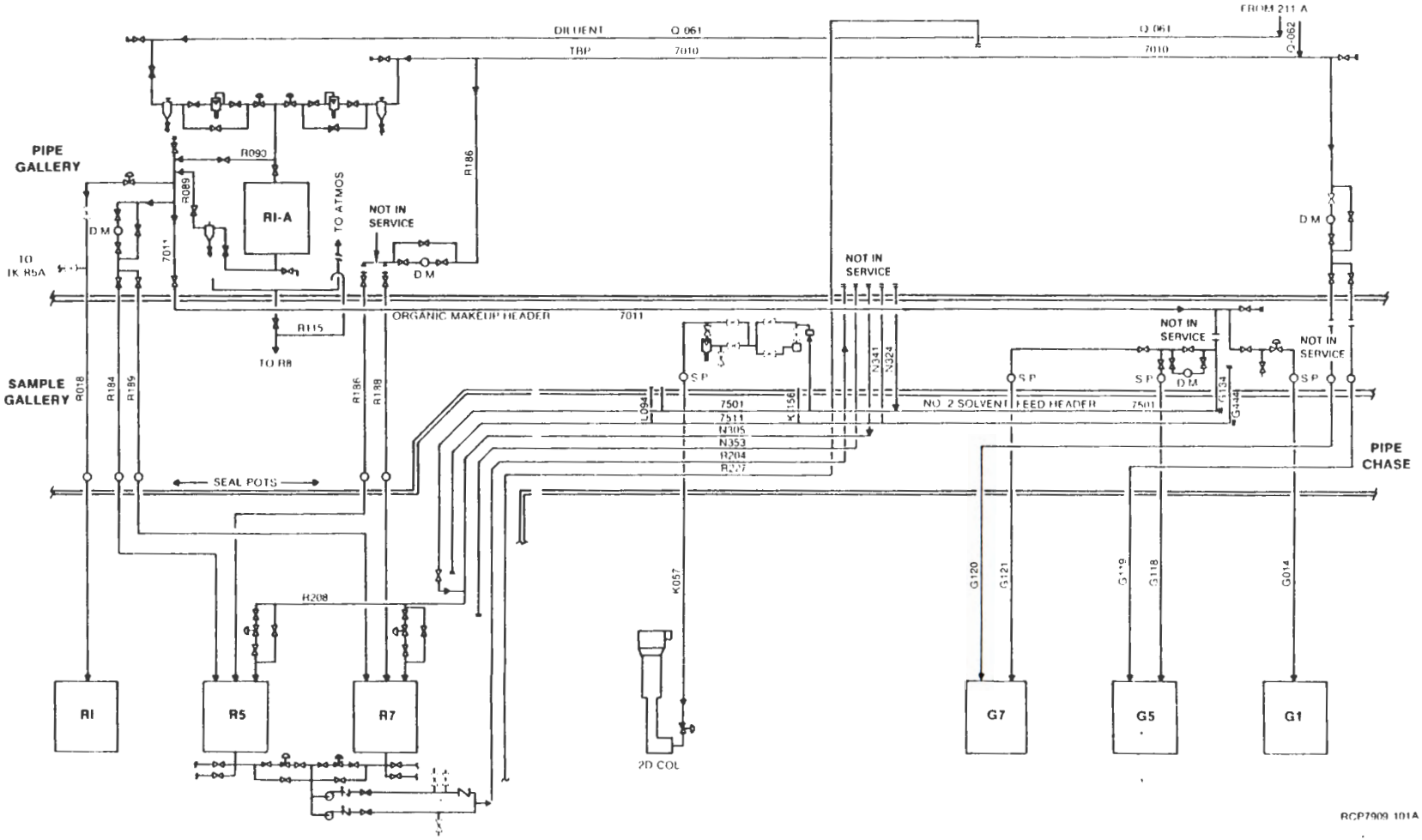

FIGURE 6-74. Organic Makeup System.

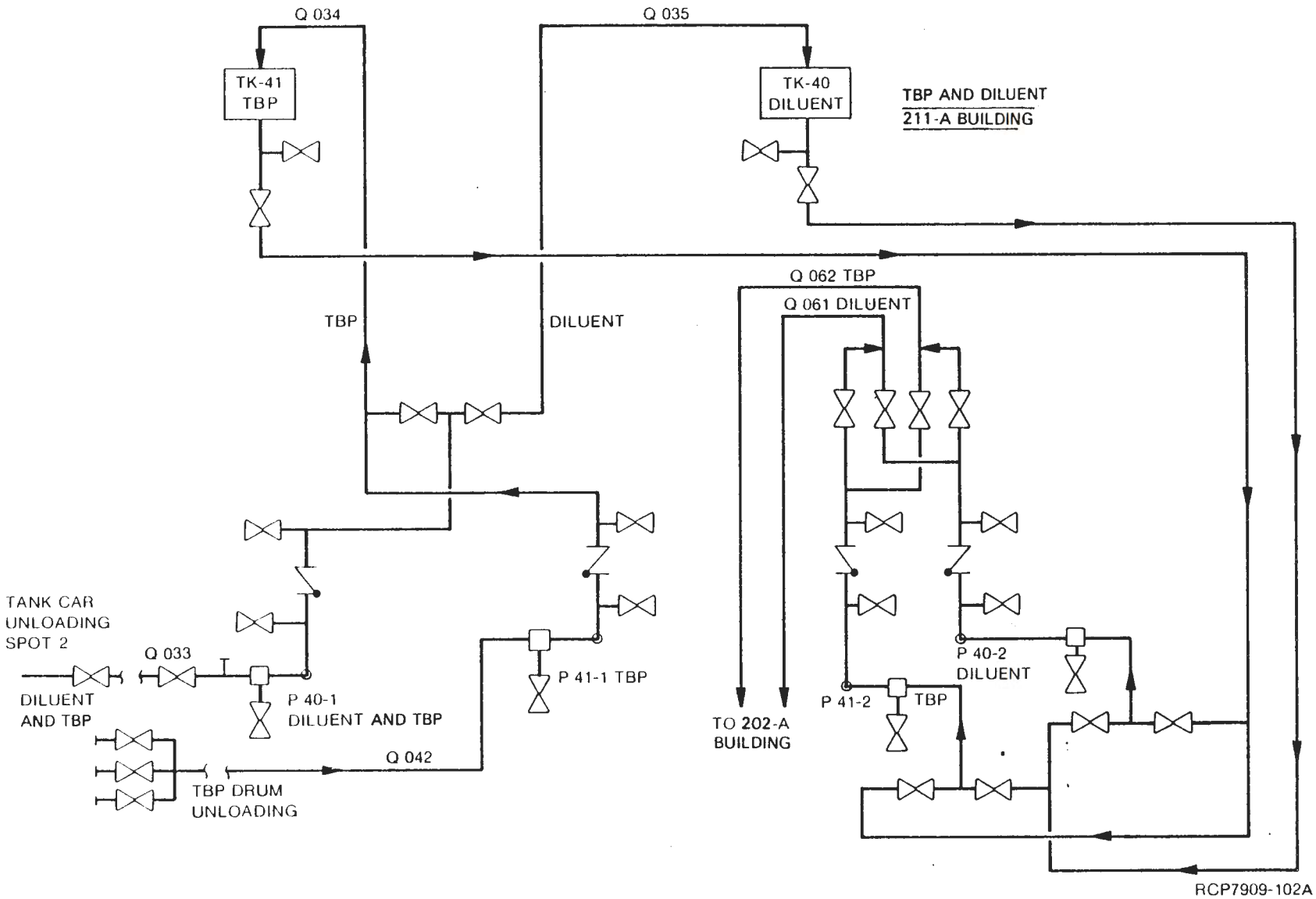

FIGURE 6-75. Solvent System.

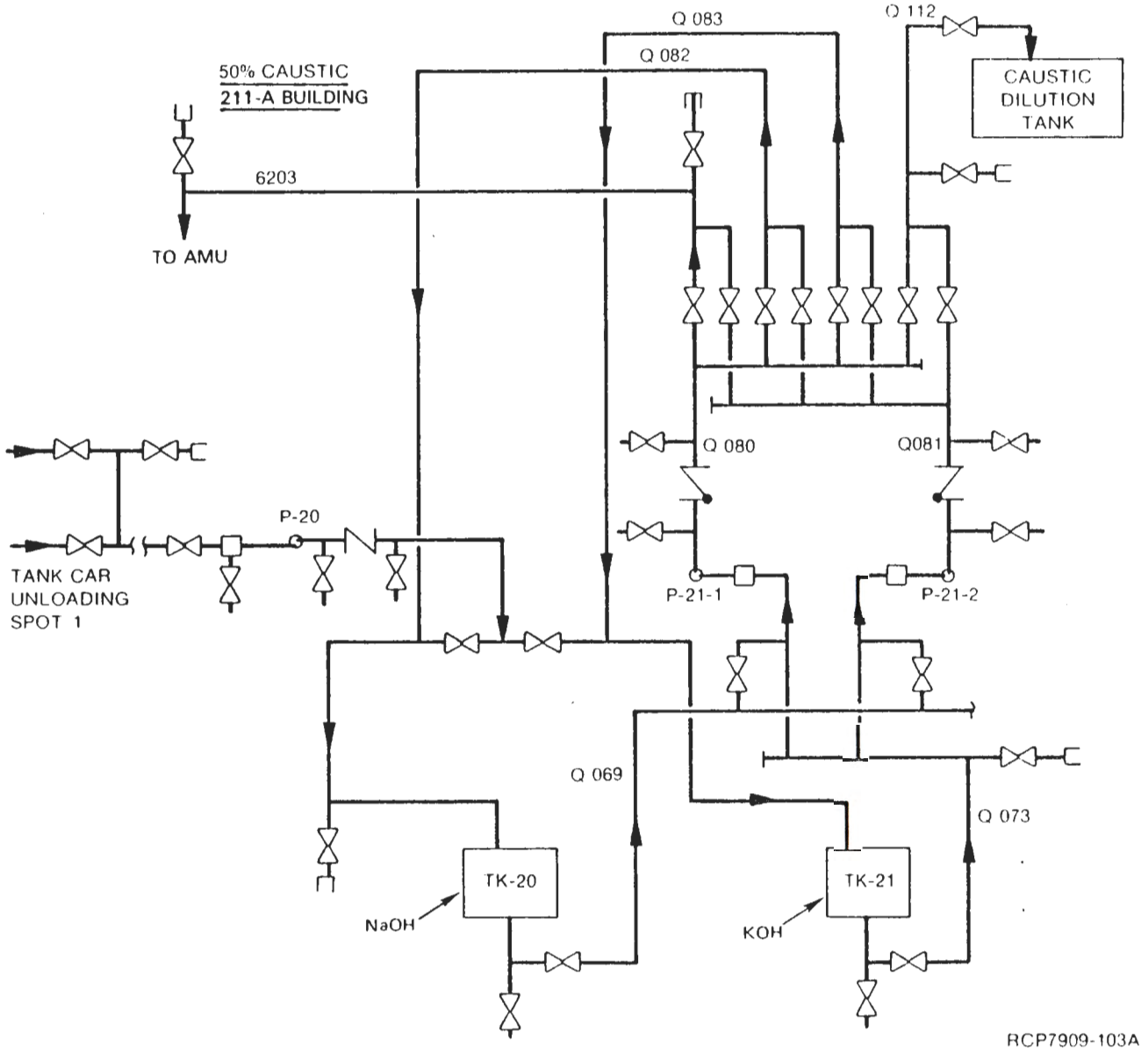

FIGURE 6-76. Caustic System. (Sheet 1 of 2)

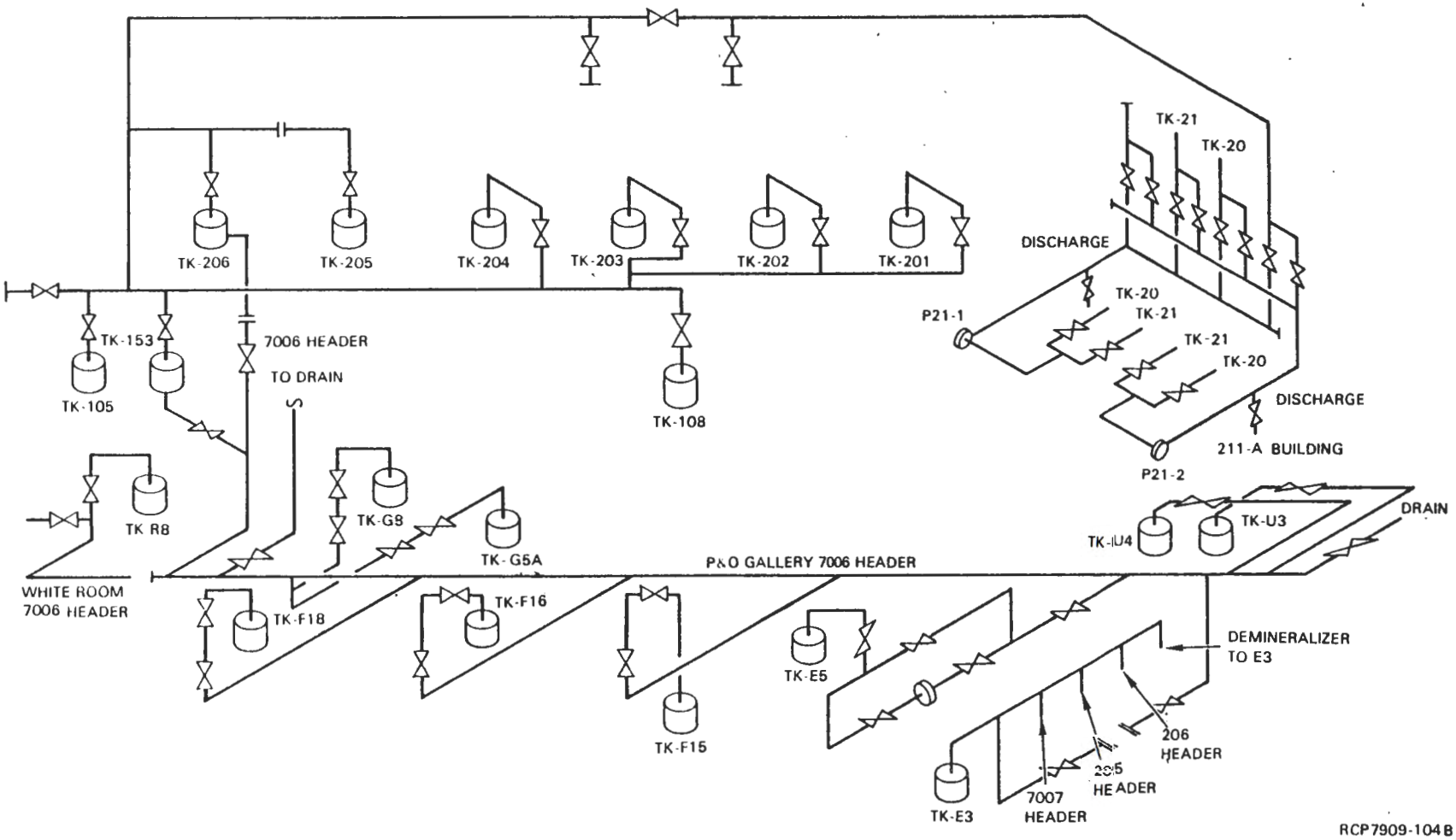

FIGURE 6-76. Caustic System. (Sheet 2 of 2)

4

6.6.1.1 Central Control Room. The general layout of the central control room, containing 17 graphic panels, is shown in Figure 6-77. Schematics of the process streams involved are shown on each panel. These panels provide data transmittal and control instrumentation for the following plant systems:

Panel Board Number	Systems
B-1	First decontamination cycle
B-1	Backcycle waste concentrator (E-H4)
B-2	
B-2	Partition cycle
B-3	
B-4	
B-4	Second plutonium cycle
B-5	Third plutonium cycle
B-6	Final uranium cycle
B-7	
B-7	Backcycle waste (TK-F10)
B-7	Waste concentration and treatment
B-8	
B-9	
B-10	
B-11	Organic system 1
B-11	Ammonia offgas system
B-12	Fire protection fire-foam
B-12	Organic solvent system 1
B-13	Organic system 2
B-14	Effluent monitoring
B-14	
B-15	Organic system 2
B-15	Process/condenser vent system
B-16	Auxiliary panel board (sump level, fire-eyes in cells)
B-16	Continuous air monitor
B-17	Second neptunium cycle

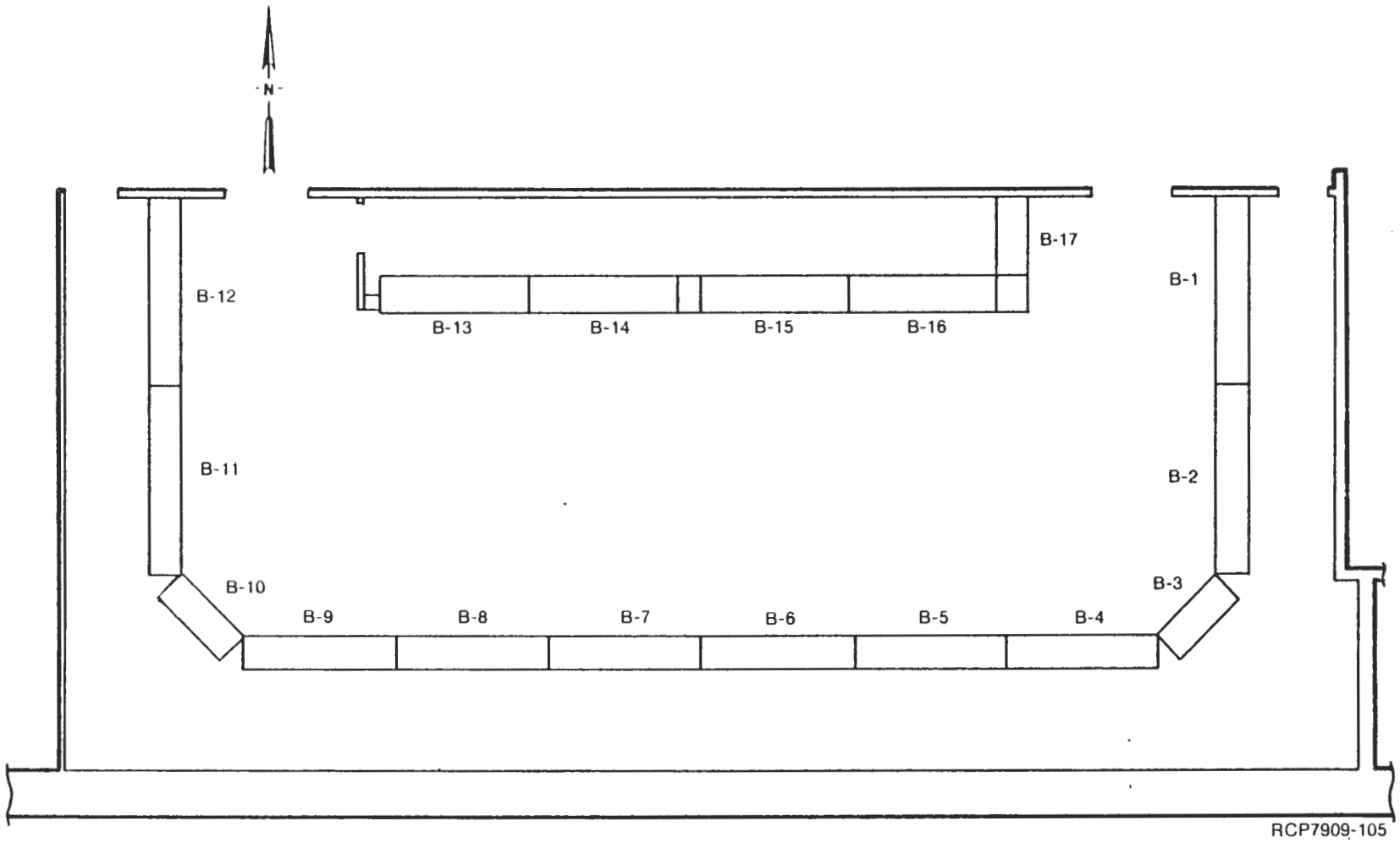

FIGURE 6-77. Floor Plan of Central Control Room.

6.6.1.2 Headend Control Room. The general layout of this control room, containing 10 graphic panels, is shown in Figure 6-78. These panels provide data transmittal and control instrumentation for the following plant systems:

Panel Board Number	Systems
A-1	Backup facility
A-2	A dissolver
A-3	Metal solution
A-3	B dissolver
A-4	Metal solution (D4)
A-4	C dissolver
A-5	Metal solution (D5), accountability point
A-5	Declad waste
A-6	
A-7	
A-7	HA feed preparation tank
A-8	Acid fractionator
A-9	Waste concentration and treatment (TK-F18, TK-F8)
A-9	Acid storage (TK-U1, TK-U2)
A-10	Laboratory waste
A-10	Sumps

6.6.1.3 Power Control Room. The power control room, having seven graphic panels (Fig. 6-79), contains controls for the building ventilation systems and instruments for utility metering.

Graphic panel boards are provided for each of the four ventilation systems. Instrumentation for the ventilation and utility systems in this control room is located as follows:

Panel Board Number	System
H-1	Laboratory ventilation system
H-2	Laboratory ventilation system Steam pressure recorder, canyon air dewpoint, and temperature recorder Trouble lights for following systems: Demineralizer High-cooling water temperature for compressors 1, 2, and 3 Low-level alarm still-storage tank Refrigerant compressors K1-2-1 and K1-2-2 Loss of airflow to counting room

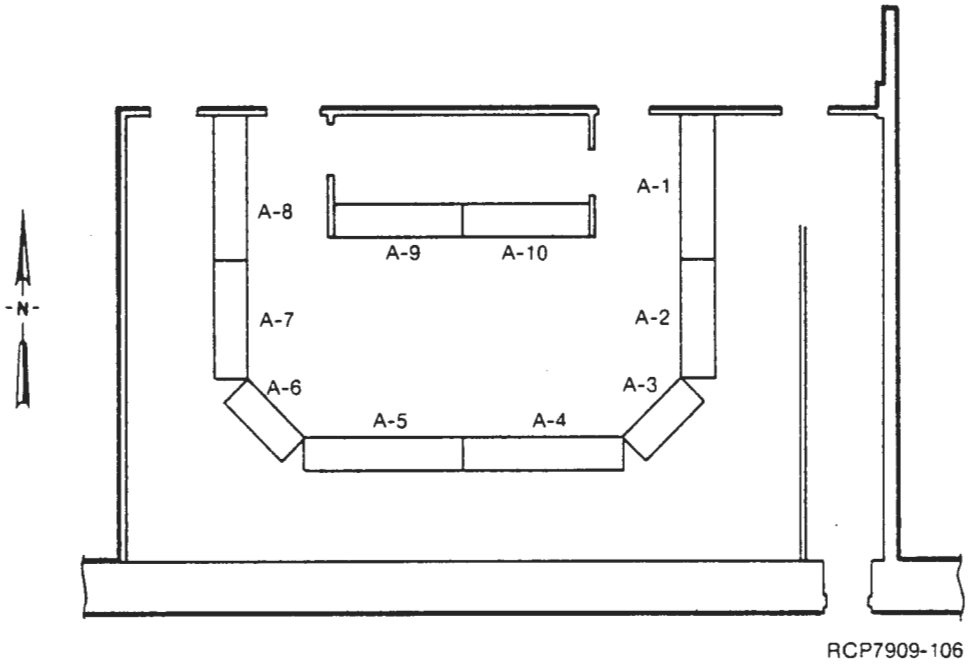

FIGURE 6-78. Floor Plan of Headend Control Room.

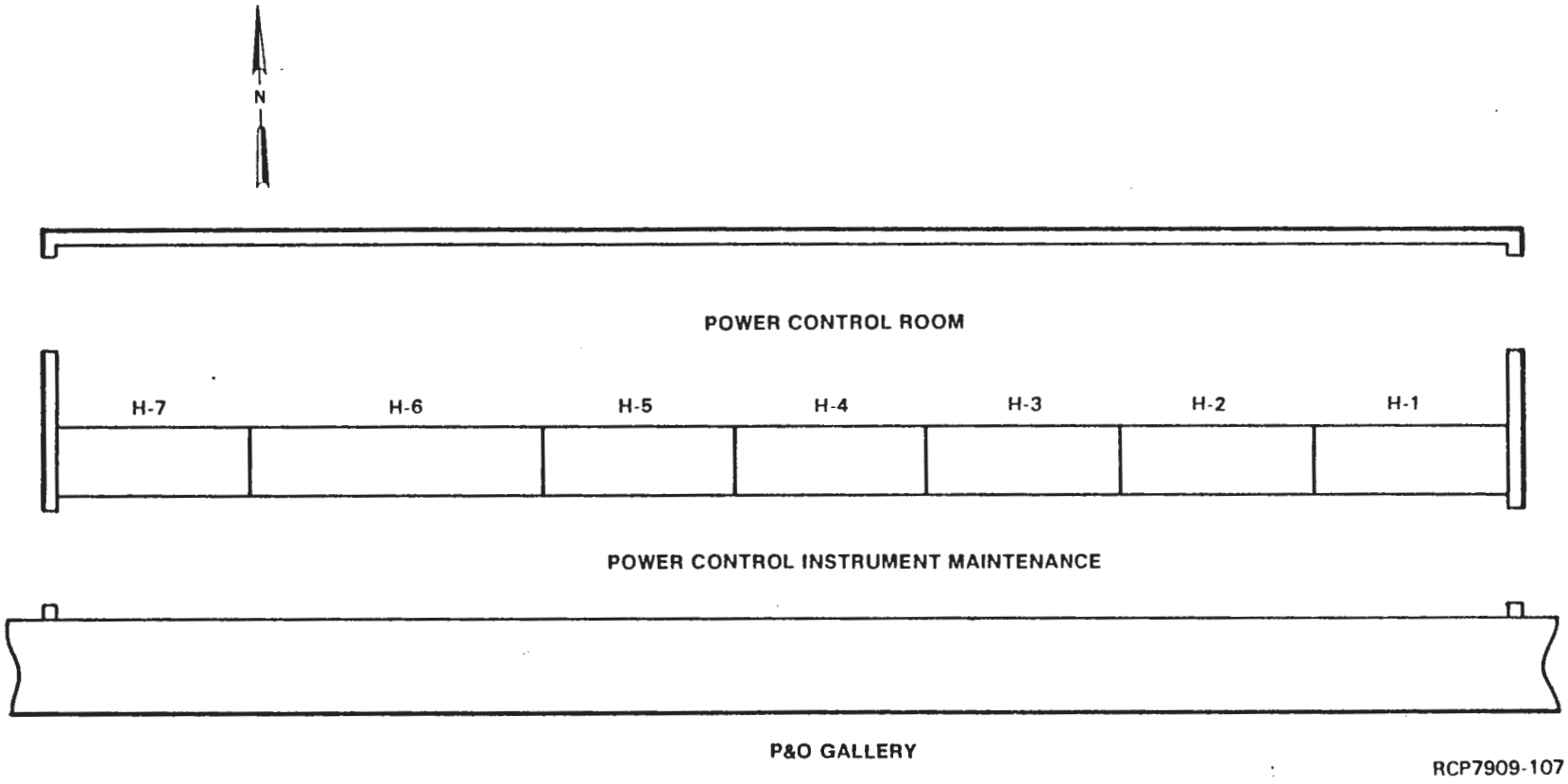

FIGURE 6-79. Floor Plan of Power Control Room.

Panel Board Number	System
H-2	Canyon and process cells ventilation system Raw water pressure gauge Sanitary water pressure gauge Steam, high-pressure header, pressure gauge
H-4	Canyon and process cell ventilation system Steam pressure gauges and low-pressure alarms for low-, medium-, and high-pressure steam headers Process air pressure gauge and low-pressure alarm Breathing air pressure gauge and low-pressure alarm Instrument air pressure gauge and low-pressure alarm Bearing temperature of exhaust fans
H-5	Sample gallery ventilation system Low-pressure raw water alarm and pressure gauge Low-pressure sanitary water alarm and pressure gauge Low-pressure sample vacuum (vacuum) alarm and pressure gauge
H-6	Service ventilation system
H-7	Sanitary water flow recorder for east and west headers Instrument and process airflow recorder Steam flow, east, west, and blower room Raw water flow, east and west headers Process air compressor status lights

6.6.1.4 N Cell Control Rooms. The N cell processing operations are controlled remotely by means of instrumentation in the shielded control rooms located one above the other, along the north wall of N cell. The general layouts of the N cell control rooms are shown in Figure 6-80. Shielding windows are installed in the south wall of the lower control room and the south and east walls of the upper control room. Shielding provided by the control room walls and viewing windows, in conjunction with the glovebox shielding panels, is sufficient to reduce exposure to less than 1/2 mr/h to personnel in the control room. Contamination control in the control rooms is facilitated by supplying all ventilation air for the glovebox room from the PR corridor via the control rooms and by air locks at the doors between the glovebox room and the control rooms.

The upper control room contains the controls and instrumentation for the plutonium conversion operations and the standby power panel for N cell. Since most of the routine processing operations are controlled from this control room, it is continuously occupied whenever the plutonium oxide production facility is operating.

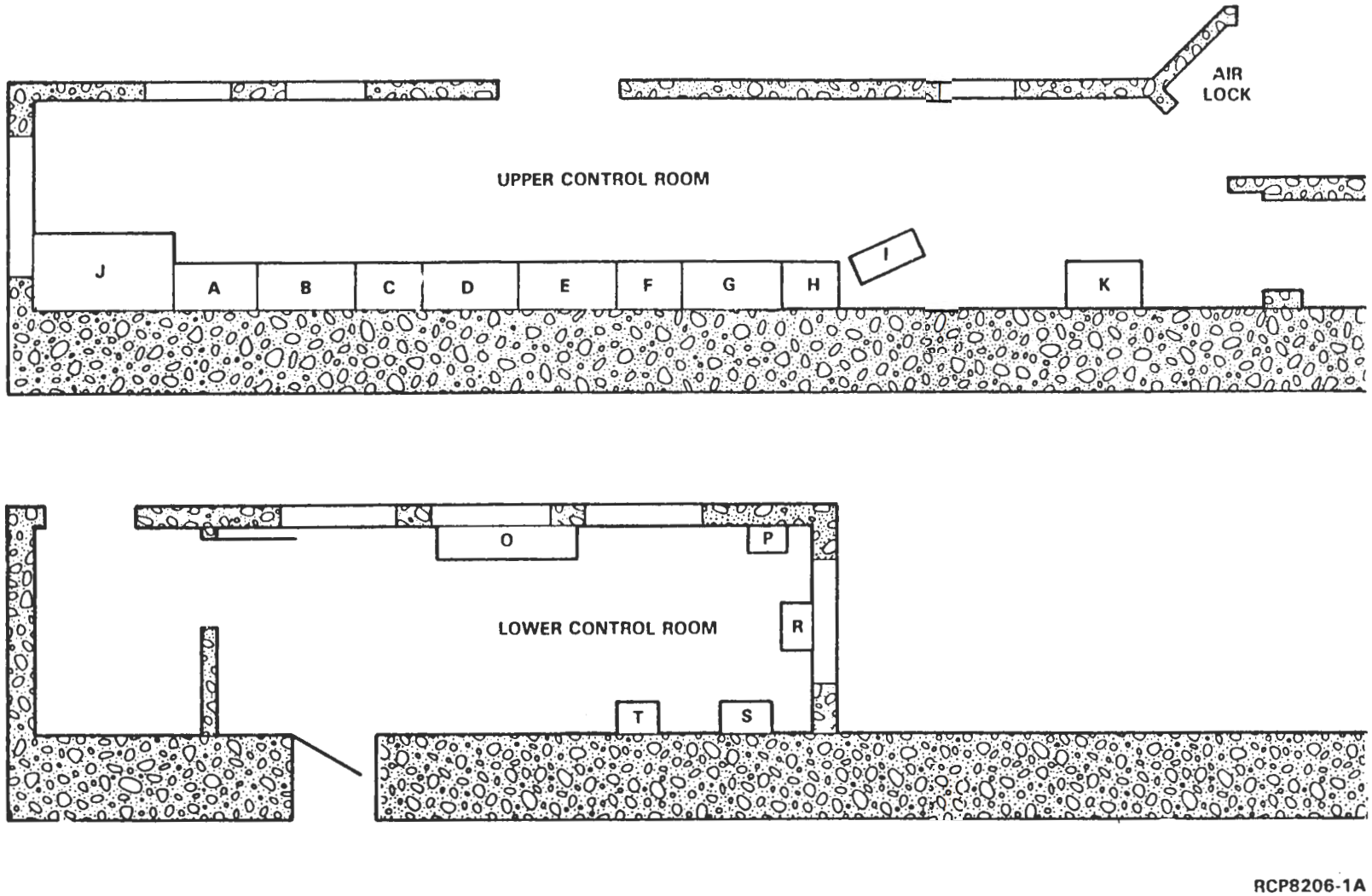

FIGURE 6-80. N Cell Control Rooms

The lower control room contains the controls and instrumentation for the plutonium oxide rework operations and the HVAC and normal power control panels.

The layout of the process control panels and power controls for the N cell operations is listed in Table 6-34.

6.6.1.5 Q Cell Control Room. The Q cell control room and its relative location with respect to the rest of Q cell is shown in Figure 5-12. This control room, used to control the neptunium purification system, is not in beneficial use.

6.6.1.6 Dispatcher's Office. The dispatcher's office serves as the main communication and personnel movement control center within the plant. Figure 6-81 shows the general floor plan for this room.

The plant dispatcher's office provides the following services:

- Recipient of all safety/environmental alarms where further immediate action is necessary
- Logging and controlling access to many controlled high-risk radiation zones
- Sampling interface with laboratory via computer terminal for analytical requests and results
- Communication access to the plant via call bell, paging, two-way radio, evacuation alarms, etc.
- Secondary control for radio-controlled locomotive in railroad tunnel.

Alarms located in area R-1 (see Fig. 6-81) are for the following systems:

- High- and low-level alarm drain tank, filter 2, main ventilation system
- Green fuel alarm
- Controlled door status-indicating lights
- CAM high-radiaton alarms for offices, services and laboratory areas, P&O and sample galleries, and N cell
- Sample building radiation monitors, high-radiation alarms
- Cell fire alarms
- Hot-bearing temperature alarm for main exhaust fans

TABLE 6-34. Process Control Panel and Power Control Layout.

Panel board number	System
	Upper control room
A	Oxalate precipitation
B	Precipitation, calcination
C	$Pu(NO_3)_4$ feed and prereduction
D	$Pu(NO_3)_4$ sampling/storage
E	Filtrate and condensate treatment, vacuum
F	Filtrate and condensate treatment and storage
G	Filtrate and condensate treatment, vacuum, vent
H	HVAC panel
I	Radiation and CAM panel
J	Powder system panel
K	Proportional (flow controller cabinet)
	Lower control room
O	Rework panel (ANN-K)
P	Blender valve cleaning controls
R	Product loadout microcontroller
S	Product loadout motor starter panel
T	Product loadout controls (CL-PL)

9413229.1463

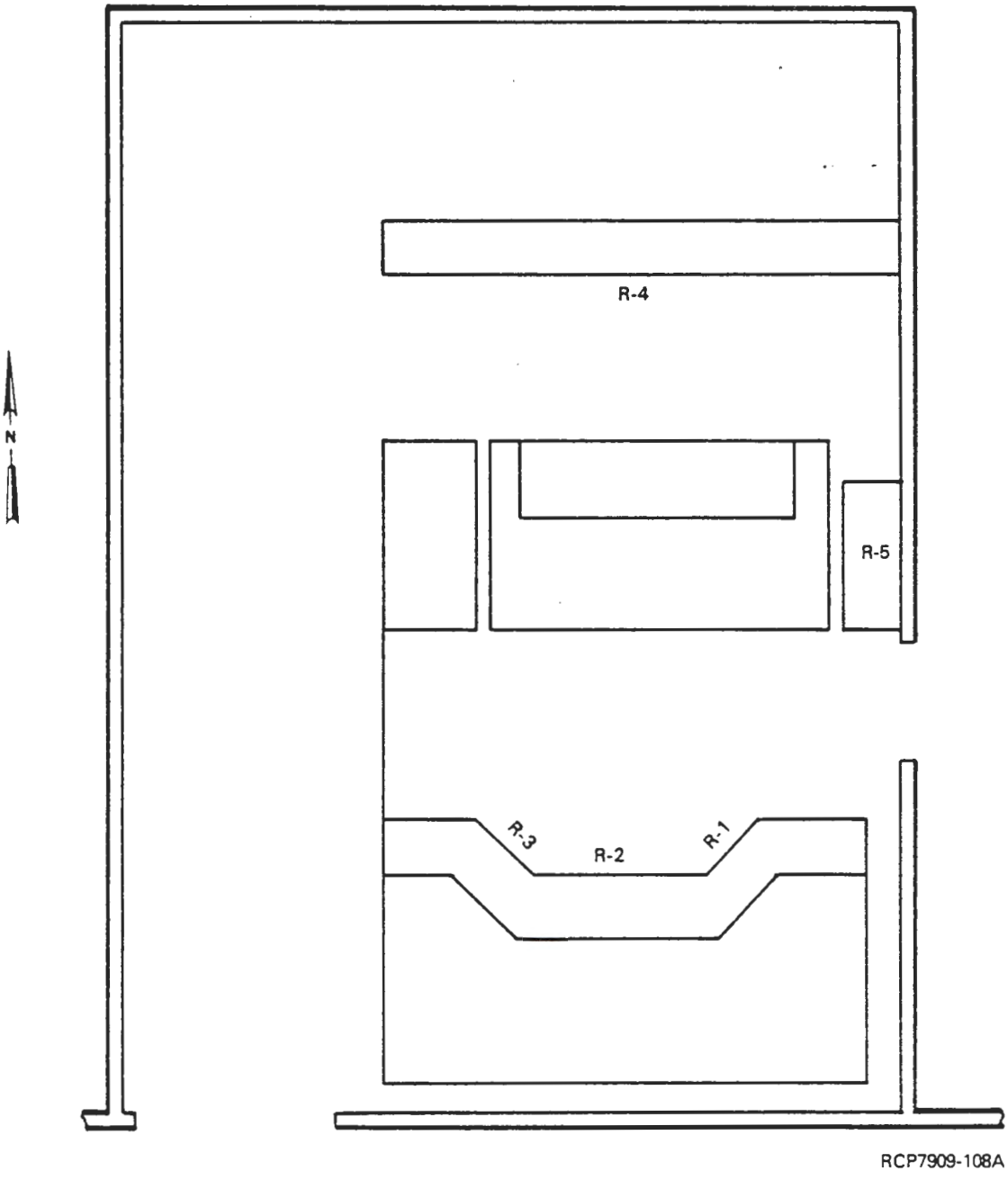

FIGURE 6-81. Floor Plan of Dispatcher's Office.

- 244 AR vault alarm
- Loss of air-sampling vacuum.

Alarms indicated in area R-2 (see Fig. 6-81) give indication for the following systems:

- Failure of steam condensate pumps
- Overflow of steam condensate catch tank
- L-11 sump alarm
- All liquid and gaseous effluent alarms, indicating high radiation, system failure, and diversion status
- High-sump levels for the ammonia scrubber, chemical sewer, and process condensate caissons
- High-WF in TK-P6
- Criticality alarms.

Log records are kept for all personnel entering controlled high-risk radiation zones. Control is exercised through electrical and key-operated door locks from the dispatcher's office. Information about radiation zone status is obtained from zone radiation instrumentation and from periodic surveys by Radiation Monitoring personnel. The lower level of area R-2 (see Fig. 6-81) is used for control of workers in the restricted areas of the plant. Examples of some of these systems follow:

- Electric lock control of the outer railroad cut pedestrian gate, which is also padlocked by Security
- Electric lock control of the railroad gate, which is also padlocked by Security
- Electric lock control of the inner railroad cut pedestrian gate
- Electric interlock control of the railroad tunnel door
- Electric lock control of the railroad tunnel pedestrian door
- Electric interlock control of the horizontal tunnel ventilation control door.

This control panel has indicator lights for the position of gates, tunnel doors, and other entrances to controlled areas. There is a closed-circuit television in area R-3 (see Fig. 6-81) for the PR dock, and for the railroad cut, giving a view of these particular areas in the dispatcher's office.

Area R-3 of the dispatcher's office also contains the call bell system and private automatic exchange (PAX) crash alarm system. The secondary control panel for the radio-controlled locomotive in the storage tunnel is in area R-5.

The dispatcher is responsible for scheduling sampling activites with the sample team and transmitting analytical sample requests to the laboratory.

In the case of a nuclear excursion in the process cells, the radiation recorders located in area R4 of the dispatcher's office will give an alarm, location of the accident, the intensity of the radiation field, and the duration of the occurrence. The emergency procedures for this event, as well as evacuation, fire, and explosion, are described in the emergency procedure manual.(29)

9412219.1466

6.6.2 Safety Criteria and Assurance for Control Rooms

6.6.2.1 Industrial and Radiation Safety. Personnel safety in the control rooms is maintained by administrative controls and requirements, such as general safety rules, SOP, and standard industrial practices. Protection against airborne contamination is discussed in Chapters 4.0 and 5.0. Protection of personnel against exposure to radiation is discussed in Chapters 4.0 and 8.0.

6.6.2.2 Fire Protection. The fire hazard associated with the control rooms is low because of the low inventory of materials that would support combustion. The combustibles consist of the insulation on the electrical wiring, small amounts in the furniture, and the small amount of paper present in the form of procedures, records, and necessary reference material. Fire protection in those areas that are either continuously or frequently (several times per shift) occupied by operating personnel (i.e., headend control room, central control room, power control room, and dispatcher's office) is based upon detection by the occupying personnel and notification of the Fire Department by manual activation of a fire alarm switch. Fire protection in those areas (i.e., N and Q cells) that may not be continuously occupied (e.g., during nonoperating or shutdown periods) is provided by an automatic sprinkler system. Section 5.4.8.6 contains additional discussion of fire protection systems.

Control rooms and operating areas are not generally evacuated in the event of a fire in a distant or remote area, unless the fire threatens the safety of the operating personnel. Thus, fires occurring in the processing areas (in the absence of a concurrent earthquake) would not interrupt or disturb the operating activities in the control rooms because of existing physical barriers.

Fires that occur in the control rooms could affect operations of other areas of the plant and the affected systems would then need to be controlled or, more probably, shut down from another location. The instrument and equipment systems used in controlling the process are designed to be

"fail safe" (i.e., loss of an essential service such as air or electricity would cause the system to shut down in a safe manner). In addition, a number of the processes can be controlled or safely shut down from the P&O gallery. Since the five control room areas are in different sections of the building (see Fig. 5-14 and Ref. 5-16) a fire in any one would not normally cause disruption of the others. This separation would allow important shutdown operations to be implemented in the other locations.

6.6.2.3 Protection from Natural Forces. The headend control room, central control room, power control room, and dispatcher's office are located in the 202-A annex. This structure would likely be severely damaged if natural forces (see Section 4.2) of the magnitude defined by current criteria were to occur. Containment, however, is not expected to be compromised, and access to the P&O gallery would be possible, allowing safe shutdown from that location. The instruments and equipment are designed to fail in a safe manner, as described previously, so little or no effort should be necessary to shut down the system safely. The N and Q cell control rooms are located in the 202-A building itself, and are as resistant to natural forces as the processing areas and systems serviced. Shutdown of processing activities in N and Q cells could be accomplished safely and without difficulty in the event of a natural forces occurrence of the worst credible magnitude.

6.6.2.4 Criticality Prevention. Nuclear criticality excursions are possible in the radioactive processing areas, including N and Q cells. These areas are all distantly located from the control rooms and dispatcher's office in the 202-A annex, and personnel in these control areas would be protected by the shielding, containment, and confinement barriers described in Chapters 4.0 and 5.0. Emergency response procedures will be followed to evacuate personnel from the 202-A building and annex in the event of a criticality excursion. Key operating and Radiation Monitoring personnel could safely effect a safe shutdown of the process (at the direction of the emergency director) from the control rooms in the annex.(31)

The N and Q cell control rooms are located adjacent to those respective processing areas, so are more vulnerable to a nuclear criticality excursion in those areas. The control rooms are shielded from the respective work areas in accordance with the design criteria in Chapter 4.0 for continuous occupancy. This shielding is inadequate to protect personnel for continuous occupancy during a criticality excursion, but would provide sufficient protection for rapid and orderly evacuation. The plutonium conversion system is provided with capability for remote safe shutdown of equipment.(32)

6.7 SAMPLING--ANALYTICAL

6.7.1 Process Samplers

Three types of facilities for obtaining process samples are located in the PUREX sample gallery. The three types differ in piping design and shielding requirements. All three use an air jet to provide vacuum to lift the process solution to a sample cup. The solution is circulated through the sample cup back to the orginating process vessel. To overcome the high lift requirement, an orificed air bleed into the sample suction leg provides an airlift effect from the tank to the sample station.

The type "A" sampler is shown in Figure 6-82. Highly radioactive solutions from containers, such as metal solution storage tanks, dissolvers, and high-level waste vessels, are sampled by means of the PUREX A sampler (or Hanford remote pipette). The remote pipette is filled and discharged hydraulically by an operator protected from direct radiation by a shielding barricade. A measured, small volume of sample is discharged into a small bottle containing a measured amount of dilution solution in a shield carrier. Sampling stations equipped with an A-type sampler are provided to sample the vessels listed in Table 6-35. In addition, nine of these stations have a secondary circulation cup and riser assembly for obtaining samples from the cell sump.

The "B"-type sampler (shown in Fig. 6-83) is used on moderately radioactive samples. These samples are taken by means of the capillary tube and bottle sampler, which holds about 5 mL of solution. The vessels or streams listed in Table 6-36 are sampled with a B sampler.

Ten sampling stations, as shown in Table 6-34, are provided with inline equipment (one photometer, a nitrite monitor, and eight scintillation meters). Some in-line equipment is run continuously, some only at the time of sampling. Three sample stations provide a second riser for sampling a cell sump. A sump sample is taken in the same manner as a standard sample, except that the sump sampling valves are used.

The C-type sampler is used for very low-level radioactive solutions and uranium product. It is similar in piping to the B-type, but is housed in a sheetmetal enclosure. The vessels listed in Table 6-35 have C-type samplers.

The PUREX headend accountability measurement system at the D5 position has, in addition to an A-type sampler, a shielded facility, or hot cell, for taking and analyzing bulk samples of dissolver solution from TK-D5. This facility is a heavily shielded cubicle located in the PUREX sample gallery, between the D4 and D5 sample hoods. It is about 5 ft high by 6 ft wide by 5 ft deep (inside dimensions), and is equipped with manipulators and about 6 in. of lead shielding on the front wall. The side walls butt directly against the concrete of the sampling stations. There is a hinged access door (about 1 ft^2) and a leaded glass viewing window (about 4 ft wide by 2 ft high by 6 in. deep) on the front of the cave. All existing utility penetrations are located at the rear of the cave, and interior lighting is at the top.

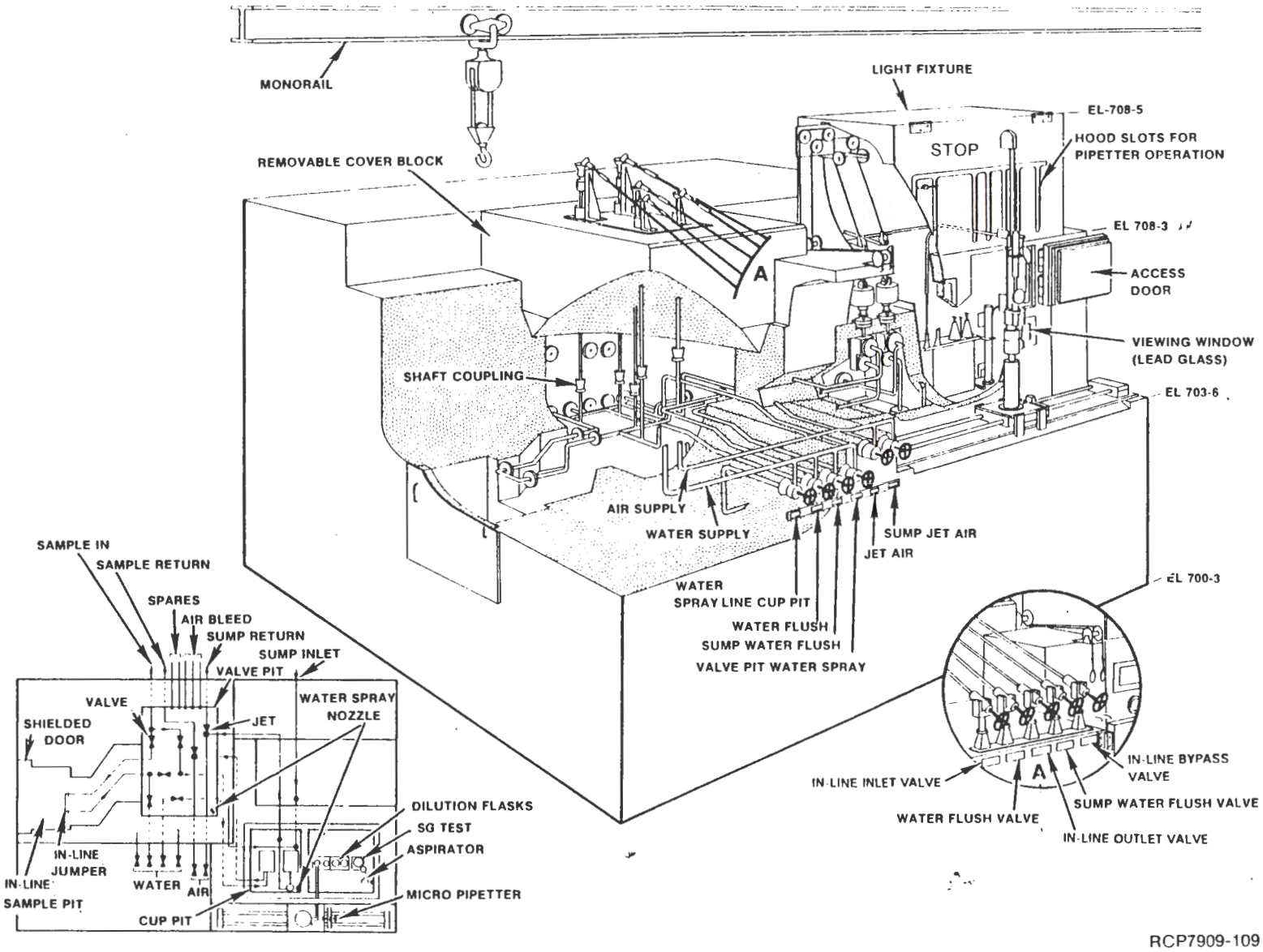

FIGURE 6-82. Type A Sampler.

TABLE 6-35. Vessels Equipped with Type A Samplers.

Vessel	Sump
TK-A3 dissolver	SA
TK-B3 dissolver	SB
TK-C3 dissolver	SC
TK-D2 coating waste receiver	
TK-D3 metal storage	
TK-D4 metal storage	
TK-D5 metal storage (cave)	
TK-E1 centrifuge slurry tank	
TK-E3 centrifuge feed tank	
TK-E5 coating waste tank	SE
TK-E6 HAF makeup	
TK-F8 waste rework	
TK-F10 3WF tank	
TK-F13 utility tank	
TK-F15 1WW denitration tank	
TK-F16 1WW denitration tank	SFB
TK-F18 cell drainage collector	
TK-F26 1WW receiver tank	SFA
TK-G2 10W tank	SG
TK-G8 organic wash waste	
TK-H1 HAF tank	
T-H2 HA column waste	

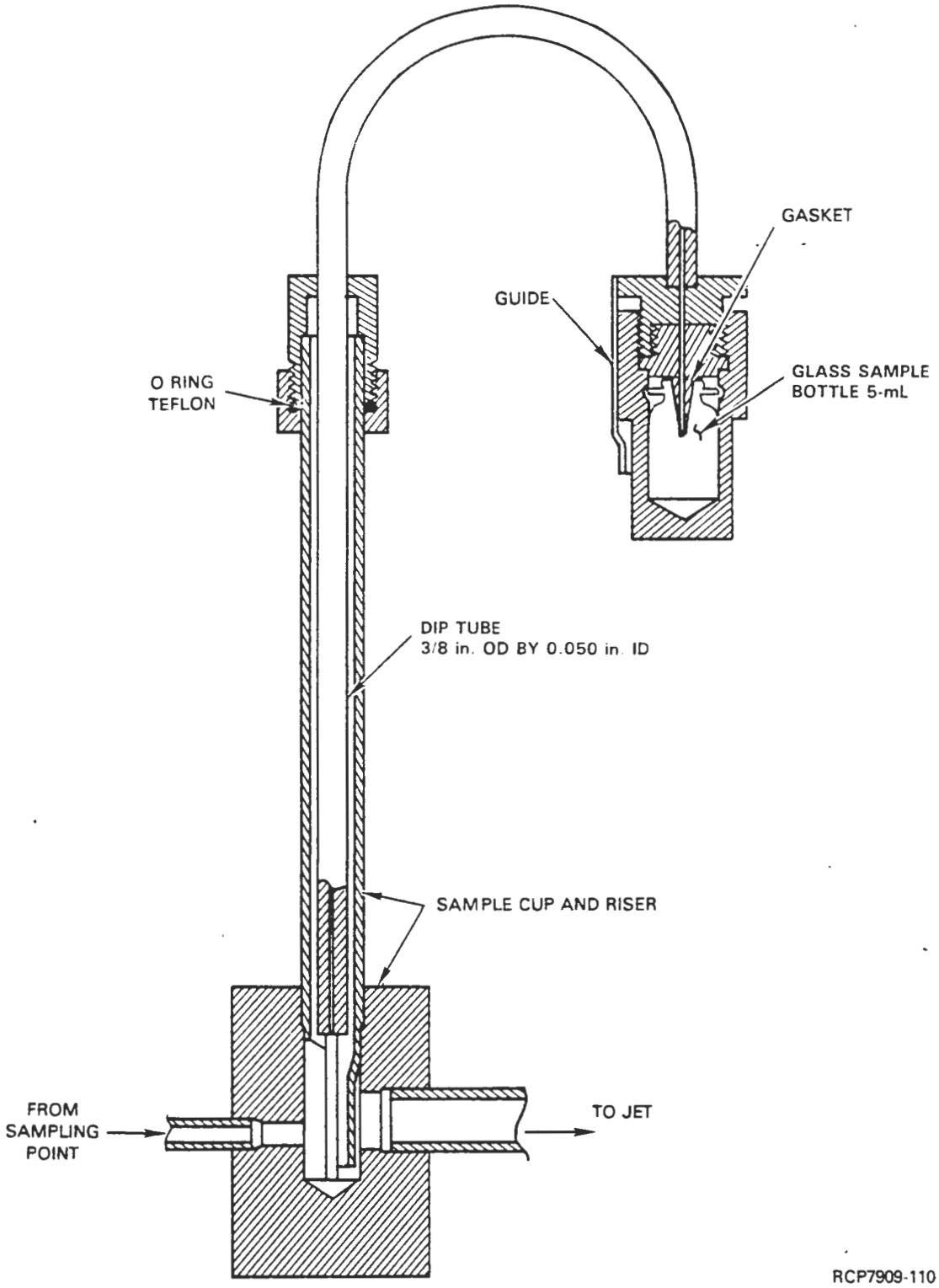

FIGURE 6-83. Type B Sampler.

TABLE 6-36. Vessels Equipped with Type B Samplers.

Sampler	Vessel/stream
F3	TK-F3 HNO_3 receiver/AAA
F5	E-F5 condenser/AAD
G1	TK-G1 1OF tank
G5	TK-G5 1OO tank
G7*	TK-G7 1OO storage
H3	T-H2 column/HAP
H4	E-H42 condenser/3WD
J1	TK-J1 3WB
J2	Np storage
J3*	1BXF tank
J4*	1BSU stream
J5A*	1BP stream
J5B	2AF tank
J7	T-J7 1C column/1CW
J8	T-J7 1CU
J21	TK-J21 2NF
J22	T-J22 2NW
J23-1	T-J23 2PN, sump SJ
J23-2	T-J23 2PW
K1*	TK-K1 2DF tank
K2	T-K2 2D column/2DW, sump SK
K3*	T-K3 2E column/2EW
K4	T-K3 2E column/2EU
K5*	TK-K5 2EU receiver
L1	T-L1 2A column/2AW, sump SLK
L2A*	T-L2 2B column/2BW
L2B*	T-L1 2B column/2BP
L3	TK-L3 3AF tank
L4*	T-L4 3A column/3AW
L5A	T-L5 3B column/3BW
L5B	TK-L5 3B column/3BP
L6	Condenser/PSD
L7	Condenser/PCD
M1	TK-M1 decontamination tank
Q3	TK-Q3 makeup and feed tank/3NC, 3XF
Q4	T-Q4 3X (ion exchange) column/3XW
Q5	TK-Q5 wash waste/3XW
Q6	TK-Q6 neptunium product tank
Q8	TK-Q8 sump waste

*Equipped with an in-line monitor.

9413219.1472

TABLE 6-37. Vessels Equipped with Type C Samplers.

Sampler	Vessel/stream
J8B	E-J8-2/1UD
K6	TK-K6/UNH product
R1	TK-R1/20F
R2	TK-R2/20S
R5	TK-R5/200
R7	TK-R7/200
R8	TK-R8/20W
U1	TK-U1/recovered HNO_3
U2	TK-U2/recovered HNO_3
U3	TK-U3/laboratory waste
U4	TK-U4/laboratory waste
U7	TK-U7 T-U6 purge
U8	TK-U8/AFD
216-A-TK2	Catch tank for stack drainage

Solution is pumped from TK-D5 into a smaller sample tank located above TK-D5 in the cell. The solution overflows back into TK-D5, circulating through the sample tank for about 15 min to ensure that the solutions in the two tanks are of the same, uniform consistency. A small stream is then circulated through a sample bottle in the cave by means of an air jet in the cave. After a circulation period of 10 to 20 min, the bottle is removed and capped. Aliquots of the sample are used for process control, as well as accountability input measurements.

6.7.2 Analytical Laboratory

The PUREX analytical laboratory is located near the east end and on the north side of the 202-A building. The analytical laboratory consists of seven laboratory rooms, a counting room, and offices arranged as shown on the floor plan (Fig. 6-84). The laboratory supports the PUREX process on a 24 h/d, 7 d/wk ABCD shift basis.

When the PUREX process is operating, the laboratory sample workload is about 3,000 samples per month, with a total of about 10,000 assays per month not counting standards, referees, or reruns.(27,30) Most process

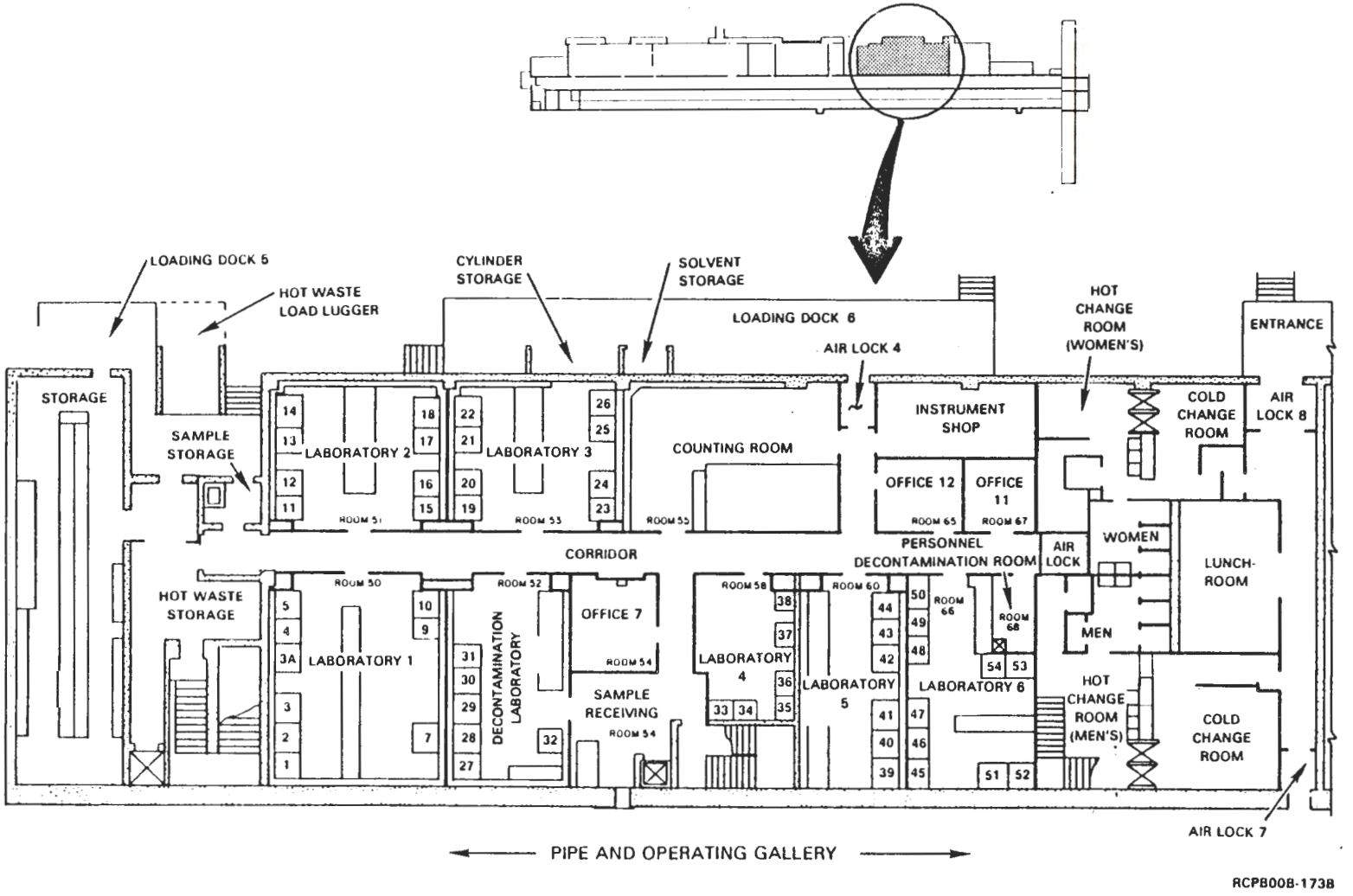

FIGURE 6-84. Layout--Analytical Laboratories.

control samples for PUREX are liquid. A relatively small number are solid (i.e., the particulate air samples, samples of solid absorption media, and the plutonium product oxide or oxalate samples*). The types of analyses performed on liquid samples include special nuclear material contents, FP content, various impurity determinations, chemical makeup analyses and SG, visual appearance, and measurements of various process control parameters, such as acidity, nitrite and fluoride.

The analytical measurement accuracy is determined by analysis of a minimum number of standards-simulating process solutions. Random selections of process samples are independently remeasured to determine the analytical measurement precision. Monthly and quarterly reports are issued summarizing the statistical evaluation or the accuracy and precision estimates.

The following is a listing of the previously achieved accuracies and precisions for selected PUREX sample points. In this case, "accuracy" is the fixed error or "bias" of the method as determined by appropriate standards, and "precision" is the total random error associated with sample analysis based on the reproducibility of results of a given sample between two individuals.

Sample Point	Determination	Accuracy	Precision
D5	Uranium	99.9%	±1.0%
D5	Plutonium	100.6%	±10.0%
L9	Plutonium	99.7%	±1.2%
K6	Uranium	101.1%	±1.2%
1BP	Alpha total	100.6%	±3.0%

These data reflect the worst-case situations. The methods for headend and product measurement of both plutonium and uranium will be changed to newer state-of-the-art techniques which should improve accuracy and precision.

The concentration of uranium and transuranic elements input to the process is measured in samples from the feed accountability tank (TK-D5). The concentrations of the solutions removed from the process are measured in samples from TK-K6 for uranium, M cell vessels TK-M3, -M4, -M5 and -M6 for plutonium, and TK-Q6 for neptunium (when required). The bulk of the waste losses of uranium and the transuranic elements is measured in samples from TK-F15, TK-D2, TK-F16, TK-F18, and TK-E5. All other output streams are sampled and measured prior to removal from process.

*Plutonium oxide and oxalate samples will not be analyzed at the PUREX laboratory. These samples will be transported to the Plutonium Finishing Plant Laboratory for analysis.

The volumes of the solutions in the tanks are determined by density and dip tube manometer measurements using a prior calibration of the tank with water. For neptunium, the weight of the solution is measured using calibrated scales.

Formal programs are in effect to ensure reliability of analytical measurements and process sampling. The difference between the beginning and ending physical inventories adjusted for all receipts and removals is calculated at the end of every campaign (about 3 mo). If this input/output inventory difference is larger than the measurement uncertainty at the 95% confidence level, an investigation is made to determine the cause of the discrepancy.

Some of the major laboratory equipment used, besides the standard hood equipment (beakers, stirrers, heat blocks, trap bottles, etc.), includes:

- Semiremote pipetter
- pH meters
- Titrators, consisting of delivery buret, electronics box, recorder, and digital readout
- Density meters
- Fluorophotometer
- Laser fluorophotometer
- Absorption spectrophotometers
- Gas-liquid chromatograph
- Dionex ion chromatograph
- Inductively coupled plasma spectrometer (ICP)
- Drying oven
- Weighing balances
- Interim sample storage vaults
- Ge(Li) gamma detectors and peripheral electronics
- Silicon alpha detectors and peripheral electronics
- Alpha proportional counters
- Low-level alpha-beta counter

- Automatic data processing equipment
- X-ray emission spectrometer (post startup).

6.7.2.1 Sample Receiving. The carriers used for sampling PUREX process samples are of three basic types: type A, "Gilmont" carrier for samples with high beta-gamma content; type B, "bayonet" bases for intermediately radioactive samples; and type C, glass and plastic bottles of various sizes (25 to 100 mL) for low-level and cold samples. In addition, the neptunium and plutonium nitrate samples are received in a 25-mL plastic bottle inside a sealed plastic bag. The sealed bag is in a 1-pt cardboard carton with the lid taped on.

The reusable Gilmont and bayonet carriers are prepared in the laboratory; appropriate dilution reagents are placed in the Gilmont vials. The carriers are then labeled, placed on a dolly, and sent downstairs on the dumbwaiter in room 54 (sample receiving on the floor plan). After sampling, the loaded dolly is sent back up on the dumbwaiter. Type B samples are loaded into special racks on the dolly to avoid tipping and spillage.

When first received, samples are surveyed for dose rate and any external contamination. If the dose rate so dictates, the sample package is transferred to a shielded carrier. Samples with high radiation are accompanied by Radiation Monitoring personnel whenever the wholebody rate could be expected to exceed 100 mr/h. Samples with any smearable contamination on the external surface of the sample container are returned to the sample gallery for decontamination.

6.7.2.2 Sample Handling. Dollies are used to transport samples and dilution vials between laboratory rooms. Absorbent, plastic-backed, laboratory paper is used on the dollies to facilitate cleanup of any spills. As stated in the previous section, racks for type B samples are used to avoid spillage. The number and placement of samples on any given dolly will be determined by the weight of sample containers, the total dose rate to the laboratory worker and also by criticality prevention considerations.

The usual precautions taken when working with hazardous chemicals are observed when working with laboratory samples. The samples are opened and analyzed in a fume hood.

High-radiation samples can be loaded into a shielded hood facility in room 50. Preliminary extractions and sample dilutions can be made on these samples inside this shielded hood using remote or semiremote tools and techniques. The prepared samples are then transferred to another appropriate hood for further treatment and analysis.

Intermediate- and low-level samples are handled in regular fume hoods with armport windows. Appropriate shielding and shielded tools are used where necessary to reduce dose rates to the hands and body.

Cold (nonradioactive) samples are handled either on the laboratory bench tops or in hoods, depending on the analysis.

6.7.2.3 Sample Disposal. Samples are vacuum transferred (slurped) in the decontamination room to either TK-F10, TK-U3, or TK-U4, depending on the sample. All samples containing any significant amount of uranium or transuranic material are transferred to TK-F10 via a dedicated line and a liquid transfer jet, while all other contaminated samples go to TK-U3/-U4. Transfer of solution from the laboratory into PUREX process vessels is coordinated with PUREX management whether or not there is significant actinide content. The solutions must be compatible with downstream processes, so the chemical composition of the aqueous solution must be known, as well as whether organic materials may be present.

Transfer of significant quantities of plutonium (greater than 15 g) into the backcycle waste system (TK-F10) is further restricted for TK-F10 criticality prevention. Prior to the transfer, PUREX management must confirm that sufficient volume and acidity exist in TK-F10 to ensure dilution and adequate acidity of the resultant solution.

6.7.2.4 Waste Handling and Disposal.

6.7.2.4.1 Solid Waste. All laboratory solid waste is treated as contaminated and loaded into approved drums with plastic liners. The waste is surveyed and packaged as necessary before loading into the waste drum. Waste from high-level beta-gamma sources, such as the shielded hood facility in room 50, is loaded into a shielded transfer dolly using long tongs to reduce dose rates. The waste is stored in a drum in the cubicle marked "hot waste storage."

6.7.2.4.2 Liquid Waste. Laboratory liquid waste containing significant quantities of uranium, transuranics, or FP is vacuum transferred to TK-F10. Waste of this nature, including very small quantities of acetone (used for drying pipettes) diluted with water and acid, is accumulated in a vacuum trap bottle and transferred to TK-F10 about once a shift. The balance of the liquid laboratory waste, which contains only trace quantities of fissile material, is discarded to waste tanks (TK-U3/-U4).

6.7.2.5 Laboratory Analyses and Equipment. Table 6-38 is a current listing of the various analyses performed in the PUREX Laboratory, as well as the expected hood location and equipment used.

6.7.2.6 Laboratory Hazard Analysis. Designed safety features and administrative controls reduce the probability of serious accidents in the laboratory to the minimum practicable. Criticality prevention specifications for the laboratory include a mass limit of less than 250 g per hood; the total laboratory mass is controlled to less than 399 g of fissile material. The laboratory hazard analysis is given in Table 6-39.

TABLE 6-38. Laboratory Analyses--Location and Equipment. (Sheet 1 of 4)

Laboratory 1--Room 50		
Hood number	Typical determination(s)	Type of samples
1	U, Np	All
2	U, Np	All
3	Free H^+ and OH^- (titration), pH	All
3A	Dilutions--miscellaneous high-level (beta-gamma) work	Dissolver solutions
4	Pu--IDMS	Dissolver solutions
5	Pu--IDMS	Dissolver solutions
6,7,8	ICP operated-general metal impurities	All
9	U	Dissolver solutions
10	Specific ion electrodes - F^-, Cl^-, Na^+	All

NOTE: A list of major equipment for laboratory 1 follows:

- Acid-base titrators
- Semiremote pipetter
- pH meters
- Plutonium chemical assay
- Titrators
- SG meter
- ICP.

TABLE 6-38. Laboratory Analyses--Location and Equipment. (Sheet 2 of 4)

Laboratory 2--Room 51		
Hood number	Typical determination(s)	Type of samples
11, 12	U by fluorophotometer	Waste, low level U
13,14	Spectrophotometric analysis for U, Fe, Ni, Al	Medium and high level U, Head end
15	Pu breakdown	L-9, M-3
16	Density and Pu dilutions	High-level Pu
17,18	Spectrophotometric analysis, Pu	L-9, M-3

NOTE: (1) A list of major equipment for laboratory 2 follows:

- Two spectrophotometers
- Fluorophotometer
- Densitometer
- Analytical balance.

9413219.1480

TABLE 6-38. Laboratory Analyses--Location and Equipment. (Sheet 3 of 4)

Laboratory 3--Room 53		
Hood number	Typical determination(s)	Type of samples
23	Np and Pu by solvent extraction/ alpha total	Process samples, except K4/K6
24	Alpha total, total beta, gamma energy analysis mounts	Process, some product waste
25	Flaming mounts	All mounts requiring flaming
26	Np and Pu by solvent extraction/ alpha total	K4, K6 (UNH product) UNH from UO_3
Bench top	AMU; H^+, Fe^{+2}, OH^-, pH, sulfamate	All cold makeups

NOTE: A list of major equipment for laboratory 3 follows:

- Titrators
- Densitometer
- pH meters
- Dionex
- Analytical balance.

TABLE 6-38. Laboratory Analyses--Location and Equipment. (Sheet 4 of 4)

Laboratory 4--Room 58		
Hood number	Typical determination(s)	Type of samples
33-34	X-Ray analysis Spares	Uranium
35	H^+, OH titration (backup)	
38	Np, Pu extraction (backup)	

Decontamination--Room 52	
Hood number	Major operations
27-30	Slurping samples and dilutions, cleaning sample carriers, high-level sample dilutions made in caves
32	Weighing disposition filters, sample carrer preparation; interim sample storage; contaminated equipment storage

NOTE: Major equipment in the decontamination room consists of an analytical balance, a drying rack and a ultrasonic cleaner.

9413219.1182

TABLE 6-39. Process Hazards Analysis--Sample-Analytical. (Sheet 1 of 2)

System or subsystem	Energy (hazard)	Unwanted energy flow (incident)	Consequence (immediate) and/or secondary)	Barriers (design, administrative safety devices, etc.)
		Sample carriers		
Type A gilmonts	Sample with high-level beta-gamma content	Spill--carrier is tipped and leaks sample	Room and personnel contamination; personnel exposure	Carrier design (low center of gravity reduces probability of tipping), administrative procedures; protective clothing
Type B bayonet	Samples with significant alpha-beta-gamma content	Spill--tipping of carrier	Room and personnel contaminated	Racks to hold bases--prevents tipping, administrative procedures
Type C glass bottles	Samples with significant alpha-beta-gamma content, but lower in beta-gamma than type B samples	Breakage of container (dropped on floor)	Personnel contaminated; cuts from glass; possible internal deposition	Equipment: dollies, padding, etc.; administrative procedures; protective clothing
Acid handling	Concentrated acids	Dropping of gallon bottle on floor resulting in breakage and spillage	Fire hazard if organics are present; acid burn to personnel: contamination spread	Training; administrative procedures; safety buckets; protective clothing
$Pu(NO_3)_4$ (L9 sample) (M Cell samples)	Pu (high concentration)	Spill or drop on floor	Room and personnel contaminated: possible interial deposition	Equipment design (sample carriers); Admin procedures; protective clothing Handling procedures, work flow
D-5 pig	FP (high concentration)	Spill or drip on floor	Spread of contamination, physical injury	System design; administrative procedures; protective clothing
Solvent storage	Flammable solvents	Fire	Chemical exposure, fire damage	Same as above
Gaseous storage	Flammable gases	Fire, high pressure	Fire damage physical injury	Same as above

TABLE 6-39. Process Hazards Analysis--Sample-Analytical. (Sheet 2 of 2)

System or subsystem	Energy (hazard)	Unwanted energy flow (incident)	Consequence (immediate) and/or secondary)	Barriers (design, administrative safety devices, etc.)
Slurp hood in decontamination	Pu, and fission products high contamination	Blowback of the slurp system or spill, contact and/or ingestion	Shutdown of laboratory decontamination operation; possible evacuation of laboratory area and curtailment of some process support function, personnel exposure to contamination	System design; administrative procedures
Sample receiving	Pu and FP, high contamination	Transfer cart tip-over or failure	Curtailment of laboratory operation to clean up spill, personnel exposure to contamination	Cart design; administrative procedures
Waste drum	Acid-soaked rags discarded in waste drum with Pu and FP	Fire--Pu and FP, contamination spread	Contamination spread, inhalation of radioactive material, shutdown of laboratory, fire damage	Administrative procedures fire sprinklers
ICP	Plutonium, fission products contamination	Loss of ventilation by failure of ICP exhaust system and Hood Ventilation System	Personnel exposure to radiation and contamination	Shut down hood operation; evacuate premises
X-ray Generating Equipment *(X-ray Emission Spectrometer)	High level X-radiation from X-ray tube	Escape or loss of control of X-ray beam	Personnel exposure to X-ray radiation; burns	Build-in equipment safety locks; administrative procedures

*Post-start-up

6.8 URANIUM PRODUCT HANDLING SYSTEM

6.8.1 Functional Description

The concentrated UNH is collected and batch-transferred from TK-K6 in the PUREX canyon to the 203-A area for storage in one of four holding tanks (TK-P1, -P2, -P3, or -P4). On occasion, uranium solution to be reworked in the PUREX process is also stored in the 203-A area. Usually, an inventory of cold or clean uranium nitrate solution is also maintained for use as startup feed solution.

The 203-A facilities include equipment for loading and unloading tank trucks, which are used to ship the uranyl nitrate to the UO_3 Plant (224-U).

6.8.2 Major Components

The 203-A facility consists of four 100,000-gal stainless steel tanks in individual concrete basins. The tanks are interconnected via piping and a pump station to permit intervessel transfers, recirculation of the content of a single tank for mixing, and loading of tank trucks (Fig. 6-85). Located in the P2 enclosure is a smaller, 15,000-gal, stainless steel tank (TK-P6) for storing and concentrating UNH solutions. TK-P6 is equipped with an offgas treatment system, consisting of a condenser, deentrainer, filter, sampler, and steam ejector. Condensate from TK-P6 concentration is collected in TK-P5, a tank also located in the P2 enclosure, from where its content is sampled and can be jetted to waste tank F18 or the chemical sewer header. All piping and tankage are fabricated of type 304L, stain- less steel.

Utilities and services for the 203-A facility are provided by the main 202-A supply systems.

6.8.3 Safety Criteria and Assurance

The 203-A facility is a radiation zone, and all work performed requires protective clothing as specified by radiation work procedures. In the event of gross spillage, UNH poses significant chemical hazards to personnel, but relatively negligible radiological hazard. Spillage or pipe leakage associated with a storage tank would be contained within the tank concrete enclosure. Leakage from a transfer line to or from the 202-A PUREX canyon would be contained within the concrete pipe chase. Overflow from a truck tank car during filling would be localized to the platform and collected in an internal sump from which the overflow can be routed back to the storage tanks. Table 6-40 presents the hazard analysis for uranium product handling.

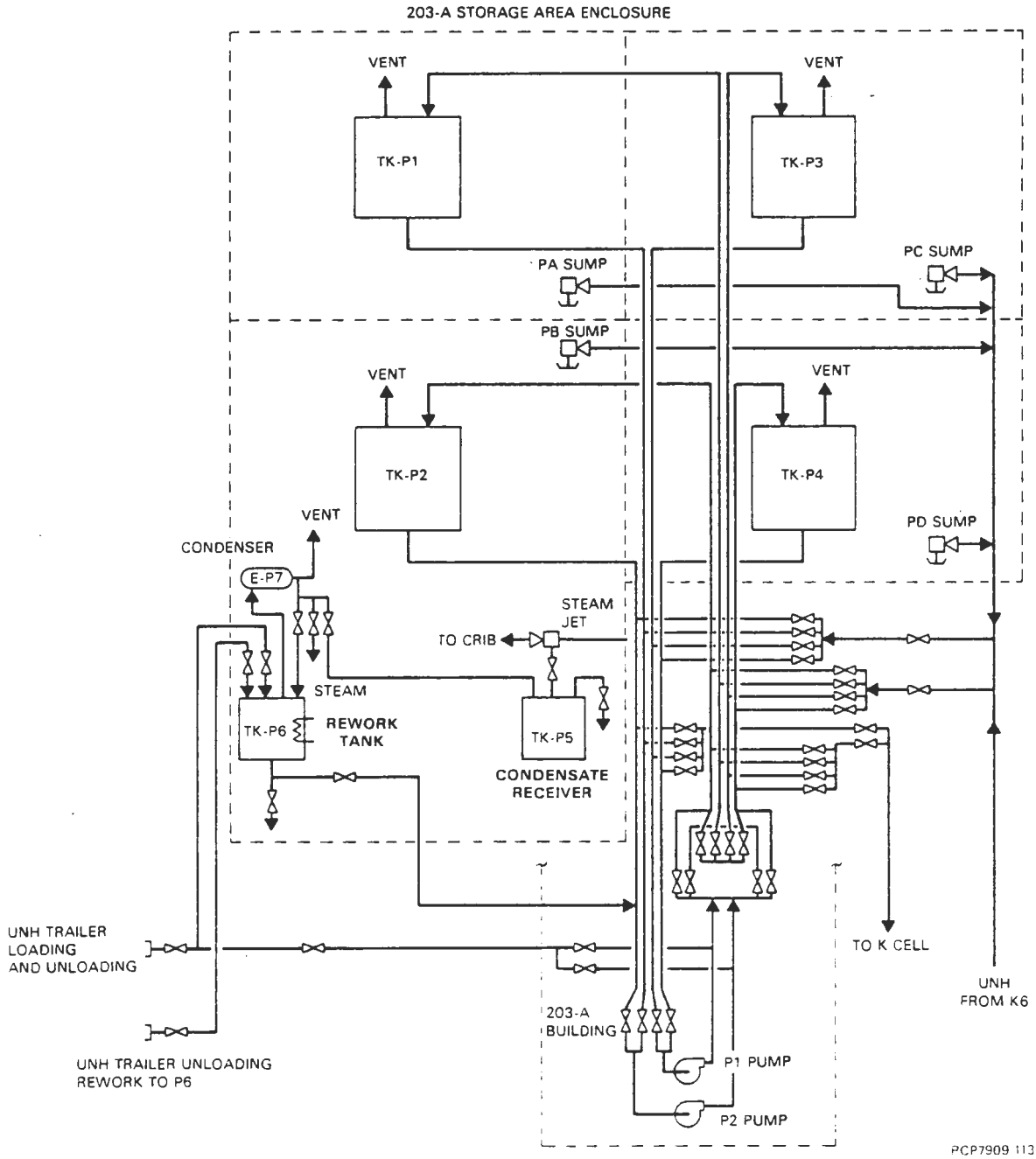

FIGURE 6-85. 203-A Piping.

TABLE 6-40. Process Hazard Analysis--Product Handling (Uranium).

Energy (hazard)	Unwanted energy flow (incident)	Consequence (immediate and/ or secondary)	Barriers (design, administrative safety devices, etc.)
Uranium	Leak during transfer to 203-A area	Chemical hazard and possible contamination	Encasement; accountability
	Overflow/leak while filling tanker	Same	Sump volume measurement; visual observation
	Storage tank leak	Same	Parapet walls and sumps

6.8.4 Operational Control

The UNH solution is measured for accountability prior to transfer from TK-K6 to a storage tank in the 203-A area. Volume and assay measurements are performed. Transfers from 203-A area P tanks to tank trucks are measured by initial-final volume difference in the shipping P tank. Accountability is determined at the receiver tank located at the UO_3 Plant. Accountability for transfers from the P tanks to TK-E6 is usually determined at TK-E6.

Tank coil condensates and waste solutions from the 203-A area sump are collected in the P5 tank, sampled and, depending on the radioactivity, routed to either the chemical sewer or to the 202-A building canyon for further processing.

6.9 REFERENCES

1. Rockwell, PUREX Process Control Manual, RHO-RE-MA-5, Rockwell Hanford Operations, Richland, Washington (June 1983).

2. DOE, Safety of Nuclear Facilities, DOE Order 5480.1A, Chapter V (August 1981) U.S. Department of Energy, Washington, D.C.

3. Rockwell, Nuclear Criticality Safety Standards, RHO-MA-136, Rockwell Hanford Operations, Richland, Washington (1981).

4. GE, Polymerization and Precipitation of Plutonium (IV) in Nitric Acid, HW-54203, General Electric, Richland, Washington (December 17, 1957).

5. ARHCO, Parameters for Plutonium Polymer Formation in Nitric Acid, ARH-SA-233, V. L. Schuelein, Atlantic Richfield Hanford Company, Richland, Washington (May 1975).

6. ARHCO, Safe U-235 Enrichments for the PUREX Facility, ARH-407, Atlantic Richfield Hanford Company, Richland, Washington (1968).

7. Reactor Handbook, Volume II, 2nd Edition, Interscience Publishers (1961).

8. Model 7C Thermal Conductivity Analyzer, Beckman Instructions 015-555636, Beckman Instruments, Inc., Fullerton, California (1978).

9. Models 864 and 865 Non-Dispersive Infrared Analyzers, Beckman Instructions 015-556872, Beckman Instruments, Inc., Fullerton, California, (1982).

10. ARHCO, Operating Experience Using Silver Reactors and Radioiodine Removal in the Hanford PUREX Plant, ARH-SA-67, Atlantic Richfield Hanford Company, Richland, Washington (1970).

11. Engineering for Nuclear Fuel Reprocessing, Gordon and Breach Publishers (1967).

12. ARHCO, PUREX Flowsheet, Reprocessing N Reactor Fuels, ARH-F-103, Atlantic Richfield Hanford Company, Richland, Washington (1976).

13. GE, The PUREX Process - A Solvent Extraction Reprocessing Method for Irradiated Uranium, HW-49483-A, General Electric Hanford Atomic Products Operation, Richland, Washington (1957).

14. ARHCO, The Kinetics and Mechanism of Plutonium (IV) Reduction by Hydroxylamine, ARH-SA-100, Atlantic Richfield Hanford Company, Richland, Washington (1971).

15. ARHCO, Neptunium-237 Production and Recovery, TID-25955, Atlantic Richfield Hanford Company, Richland, Washington (1972).

16. GE, PUREX Neptunium Recovery and Purification-Information Manual, Appendix A--Chemistry of Neptunium, HW-77678, General Electric Company, Richland, Washington (1963).

17. Rockwell, PUREX Technical Manual, RHO-MA-116, Rockwell Hanford Operations, Richland, Washington (September 1983).

18. GE, The Zirflex Process Terminal Development Report, HW-65979, General Electric Company, Richland, Washington (1960).

19. GE, Design Criteria--CGC-124 Increased Processing Flexibility--PUREX, Part I--Dissolver System Modifications, HW-80407, General Electric Company, Richland, Washington (1964).

20. ARHCO, PUREX Plant Capability for Nuclear Material Input Measurement, ARH-2225, Atlantic Richfield Hanford Company, Richland, Washington (1971).

21. ORNL, KENO4, An Improved Monte Carlo Criticality Program, ORNL-4938, Oak Ridge National Laboratory, Union Carbide, Oak Ridge, Tennessee (November 1975).

22. TNX-Evaporator Incident, DP-25, E.I. duPont de Nemours and Company, Inc., Savannah River, Georgia (1953).

23. GE, Overconcentration in Initial Operation of Uranium Evaporator--321 Building, HW-29690, General Electric Hanford Atomic Products Operation, Richland, Washington (1953).

24. GE, Investigation of Explosive Characteristics of PUREX Solvent Decomposition (Red Oil), HW-27492, General Electric Hanford Atomic Products Operation, Richland, Washington (1953).

25. GE, Safety Aspects of Solvent Nitration in HTGR Fuel Reprocessing, GA-14372, R. G. Wilbourn, General Atomic Company, San Diego, California (June 1977).

26. Rockwell, Hazard Identification and Evaluation for the N Cell Blender, SD-HS-SAR-015, L. A. Stout, Rockwell Hanford Operations, Richland, Washington (April 1983).

27. ARHCO, Use of In-Line Monitors for Process Control of the Hanford PUREX Plant, ARH-SA-116, Atlantic Richfield Hanford Company, Richland, Washington (1972).

28. Prevention of Significant Deterioration Permit, PSD-X80-14, U.S. Environmental Protection Agency, Region 10, Seattle, Washington (1980).

29. Rockwell, Emergency Procedures Manual, RHO-MA-111, Rockwell Hanford Operations, Richland, Washington (1979).

30. ARHCO, PUREX Nuclear Operating Training Manual, Atlantic Richfield Hanford Company, Richland, Washington (1973).

31. Rockwell, Criticality Prevention Specifications, Uranium-Plutonium Separation at the PUREX Plant, CPS-P-465-40000, Rockwell Hanford Operations, Richland, Washington (April 21, 1983).

32. Rockwell, Criticality Prevention Specifications PUREX Plant PuO_2 Conversion Facility, CPS-P-465-60010 to 60170, Rockwell Hanford Operations, Richland, Washington (June 27, 1983).