0047269

DOE/RL-89-03
Revision 3

UC-630

# Hanford Facility Dangerous Waste Permit Application, 616 Nonradioactive Dangerous Waste Storage Facility

Date Published
March 1997

MAY 1997
RECEIVED
EDMC

United States
Department of Energy
P.O. Box 550
Richland, Washington 99352

Approved for Public Release

**TRADEMARK DISCLAIMER**

Reference herein to any specific commercial product, process, or service by trade name, trademark, manufacturer, or otherwise, does not necessarily constitute or imply its endorsement, recommendation, or favoring by the United States Government or any agency thereof or its contractors or subcontractors.

This report has been reproduced from the best available copy. Available in paper copy and microfiche.

Available to the U.S. Department of Energy
and its contractors from
Office of Scientific and Technical Information
P.O. Box 62
Oak Ridge, TN 37831
(615) 576-8401

Available to the public from the U.S. Department of Commerce
National Technical Information Service
5285 Port Royal Road
Springfield, VA 22161
(703) 487-4650

Printed in the United States of America

DISCLM-5.CHP (8-91)

The following lists all amendments to the 616 NRDWSF Portion of the HF RCRA Permit and where these are located in Revision 3.

III.1.B.a. is now located on Page 2-6, line 7, and reads as follows: "Compatible waste with incomplete paperwork also is staged in this area while discrepancies are resolved."

III.1.B.b. is no longer applicable per the revised Ecology Checklist.

III.1.B.c. has been removed from the text.

III.1.B.d. is now located in Chapter 3.0, Section 3.3, page 3-3, line 8.

III.1.B.e. is now located in Appendix 3A, Section 1.1, page 3, lines 41 through 42.

III.1.B.f. is now located in Appendix 3A, Section 1.2, page 4, lines 7 through 47, and page 5, lines 1 through 26.

III.1.B.g. is now located in Appendix 3A, Section 1.2, page 5, lines 32 through 34.

III.1.B.h. is now located in Appendix 3A, Section 1.2, page 5, lines 36 through 43.

III.1.B.i. is now located in Appendix 3A, Section 1.3, page 6, line 9.

III.1.B.j. is now located in Appendix 3A, Section 1.3, page 6, lines 10 through 11.

III.1.B.k. is now located in Appendix 3A, Section 1.3, page 6, line 16.

III.1.B.l. is now located in Appendix 3A, Section 1.3, page 6, lines 24 through 26.

III.1.B.m. is now located in Appendix 3A, Section 1.3, page 6, lines 26 through 27.

III.1.B.n. is now located in Appendix 3A, Section 1.4, page 6, lines 33 through 49.

III.1.B.o. is now located in Appendix 3A, Section 1.4, page 7, lines 11 through 16.

III.1.B.p. is now located in Appendix 3A, Section 1.4, page 7, lines 23 through 24.

III.1.B.q. is now located in Appendix 3A, Section 1.4, page 7, lines 27 through 28.

III.1.B.r. [Reserved]

III.1.B.s. is now located in Chapter 4.0, Section 4.1.2, page 4-4, lines 38 through 42.

III.1.B.t. [Reserved]

III.1.B.u. is now located in Chapter 4.0, Section 4.1.2, page 4-5, lines 18 through 19.

III.1.B.v. has been removed from the text.

III.1.B.w. is now located in Chapter 4.0, Section 4.1.2, page 4-5, lines 33 through 35.

III.1.B.x. is now located in Chapter 6.0, Figure 6-1, page F6-1.1.

III.1.B.y. has been removed from the text.

III.1.B.z. is now located in Chapter 11.0, Section 11.1.1.2, page 11-2, lines 38 through 42.

III.1.B.aa. is now located in Chapter 11.0, Section 11.1.1.1, page 11-1, line 41.

III.1.B.bb. is now located in Chapter 11.0, Table 11-1, page T11-1.

III.1.B.cc. through ff. are now addressed in the Hanford Facility Dangerous Waste Permit Application, General Information Portion (DOE/RL-91-28), Chapter 12.0.

III.1.B.gg. is now located in Chapter 3.0, Section 3.1, page 3-1, lines 29 through 33.

III.1.B.hh. is now located in Appendix 11A.

III.1.B.ii. is now located in Chapter 7.0, page 7-1, lines 4 through 5.

III.1.B.jj. is now longer applicable per WAC 173-303.

III.1.B.kk. is now located in Chapter 2.0, Section 2.1.6, page 2-6, lines 36 through 39.

III.1.B.ll. is no longer applicable.

III.1.B.mm. is now located in Chapter 3.0, Section 3.3, page 3-4, line 19.

III.1.B.nn. is now located in Chapter 3.0, Section 3.1, page 3-1, lines 12 through 17.

III.1.B.oo. is now located in Chapter 3.0, Section 3.1, page 3-1, lines 24 through 25.

III.1.B.pp. has been removed from Chapter 3.0.

III.1.B.qq. is now located in Chapter 3.0, Section 3.1, page 3-1, line 26.

III.1.B.rr. has been removed from Chapter 3.0.

III.1.B.ss. has been removed from Chapter 3.0.

III.1.B.tt. has been removed from Chapter 3.0.

III.1.B.uu. has been removed from Chapter 3.0.

III.1.B.vv. has been removed from Chapter 3.0.

III.1.B.ww. is now located in Appendix 3A, Section 1.3, page 6, line 7.

III.1.B.xx has been removed from Chapter 3.0.

III.1.B.yy. is now located in Appendix 3A, Section 2.0, page 7, lines 34 through 38.

III.1.B.zz. is now located in Chapter 4.0, Table 4-2, page T4-2, line 27.

III.1.B.aaa. is now located in Chapter 4.0, Table 4-2, page T4-2, lines 29 through 31.

III.1.B.bbb. is now located in Appendix 4B, page APP 4B-iii, line 13.

# HANFORD FACILITY DANGEROUS WASTE PERMIT APPLICATION, 616 NONRADIOACTIVE DANGEROUS WASTE STORAGE FACILITY

## FOREWORD

The *Hanford Facility Dangerous Waste Permit Application* is considered to be a single application organized into a General Information Portion (document number DOE/RL-91-28) and a Unit-Specific Portion. The scope of the Unit-Specific Portion is limited to Part B permit application documentation submitted for individual, 'operating' treatment, storage, and/or disposal units, such as the 616 Nonradioactive Dangerous Waste Storage Facility (this document, DOE/RL-89-03).

Both the General Information and Unit-Specific portions of the *Hanford Facility Dangerous Waste Permit Application* address the content of the Part B permit application guidance prepared by the Washington State Department of Ecology (Ecology 1996) and the U.S. Environmental Protection Agency (40 Code of Federal Regulations 270), with additional information needs defined by the *Hazardous and Solid Waste Amendments* and revisions of Washington Administrative Code 173-303. For ease of reference, the Washington State Department of Ecology alpha-numeric section identifiers from the permit application guidance documentation (Ecology 1996) follow, in brackets, the chapter headings and subheadings. A checklist indicating where information is contained in the 616 Nonradioactive Dangerous Waste Storage Facility permit application documentation, in relation to the Washington State Department of Ecology guidance, is located in the Contents Section.

Documentation contained in the General Information Portion is broader in nature and could be used by multiple treatment, storage, and/or disposal units (e.g., the glossary provided in the General Information Portion). Wherever appropriate, the 616 Nonradioactive Dangerous Waste Storage Facility permit application documentation makes cross-reference to the General Information Portion, rather than duplicating text.

Information provided in this 616 Nonradioactive Dangerous Waste Storage Facility permit application documentation is current as of March 1, 1997.

This page intentionally left blank.

# CONTENTS

FOREWORD

METRIC CONVERSION CHART

APPLICATION CHECKLIST

1.0 PART A [A]

2.0 FACILITY DESCRIPTION AND GENERAL PROVISIONS [B and E]

3.0 WASTE ANALYSIS [C]

4.0 PROCESS INFORMATION [D-1 through D-8]

5.0 GROUNDWATER MONITORING FOR LAND-BASED UNITS [D-10]

6.0 PROCEDURES TO PREVENT HAZARDS [F]

7.0 CONTINGENCY PLAN [G]

8.0 PERSONNEL TRAINING [H]

9.0 EXPOSURE INFORMATION REPORT

10.0 WASTE MINIMIZATION [D-9]

11.0 CLOSURE AND FINANCIAL ASSURANCE [I]

12.0 REPORTING AND RECORDKEEPING

13.0 OTHER FEDERAL AND STATE LAWS [J]

14.0 PART B CERTIFICATION [K]

15.0 REFERENCES

# APPENDICES

2A TOPOGRAPHIC MAP

3A WASTE ANALYSIS PLAN FOR 616 NONRADIOACTIVE DANGEROUS WASTE STORAGE FACILITY

4A CONSTRUCTION SPECIFICATION

4B DESIGN DRAWINGS

4C CONTAINMENT CALCULATIONS

4D CONCRETE SEALANT PROPERTIES AND PERFORMANCE DATA

7A BUILDING EMERGENCY PLAN - 616 BUILDING

8A TRAINING

11A RANDOM NUMBERS TABLE

11B DESCRIPTION OF PROCEDURES

## METRIC CONVERSION CHART

| Into metric units | | | Out of metric units | | |
|---|---|---|---|---|---|
| If you know | Multiply by | To get | If you know | Multiply by | To get |
| **Length** | | | **Length** | | |
| inches | 25.40 | millimeters | millimeters | 0.0393 | inches |
| inches | 2.54 | centimeters | centimeters | 0.393 | inches |
| feet | 0.3048 | meters | meters | 3.2808 | feet |
| yards | 0.914 | meters | meters | 1.09 | yards |
| miles | 1.609 | kilometers | kilometers | 0.62 | miles |
| **Area** | | | **Area** | | |
| square inches | 6.4516 | square centimeters | square centimeters | 0.155 | square inches |
| square feet | 0.092 | square meters | square meters | 10.7639 | square feet |
| square yards | 0.836 | square meters | square meters | 1.20 | square yards |
| square miles | 2.59 | square kilometers | square kilometers | 0.39 | square miles |
| acres | 0.404 | hectares | hectares | 2.471 | acres |
| **Mass (weight)** | | | **Mass (weight)** | | |
| ounces | 28.35 | grams | grams | 0.0352 | ounces |
| pounds | 0.453 | kilograms | kilograms | 2.2046 | pounds |
| short ton | 0.907 | metric ton | metric ton | 1.10 | short ton |
| **Volume** | | | **Volume** | | |
| fluid ounces | 29.57 | milliliters | milliliters | 0.03 | fluid ounces |
| quarts | 0.95 | liters | liters | 1.057 | quarts |
| gallons | 3.79 | liters | liters | 0.26 | gallons |
| cubic feet | 0.03 | cubic meters | cubic meters | 35.3147 | cubic feet |
| cubic yards | 0.76456 | cubic meters | cubic meters | 1.308 | cubic yards |
| **Temperature** | | | **Temperature** | | |
| Fahrenheit | subtract 32 then multiply by 5/9ths | Celsius | Celsius | multiply by 9/5ths, then add 32 | Fahrenheit |
| **Force** | | | **Force** | | |
| pounds per square inch | 6.895 | kilopascals | kilopascals | $1.4504 \times 10^{-4}$ | pounds per square inch |
| **Lighting** | | | **Lighting** | | |
| foot-candles | 10.764 | meter-candles | meter-candles | 0.0929 | foot-candles |

Source: *Engineering Unit Conversions*, M. R. Lindeburg, PE., Second Ed., 1990, Professional Publications, Inc., Belmont, California.

This page intentionally left blank.

Facility name 616 Nonradioactive Dangerous Waste Storage Facility

Date Application Received _____

| State of Washington<br>Part B Permit Application Review Checklist for<br>Treatment and Storage in Tanks and Containers | | | |
|---|---|---|---|
| | | Technically Adequate? | Location in Application |
| A. | Part A Form | | Chapter 1.0 |
| B. | Facility Description and General Provisions | | Chapter 2.0 |
| B-1 | General Description | | ↓ |
| B-1(a) | Facility Description | | 2.0, Section 2.1 |
| B-1(b) | Construction Schedule | | 2.0, Section 2.1.7 |
| B-2 | Topographic Map | | 2.0, Section 2.2 |
| B-2a | General Requirements | | Not Applicable |
| B-2b | Additional Requirements for Land Disposal Facilities | Not Applicable | Not Applicable |
| B-3 | Seismic Consideration | | Not Applicable |
| B-4 | Traffic Information | | 2.0, Section 2.3 |
| C. | Waste Analysis | | Chapter 3.0 |
| C-1 | Chemical, Biological and Physical Analyses | | 3.0, Section 3.1 |
| C-1a<br>C-1b<br>C-1c | Waste In Piles<br>Landfilled Wastes<br>Wastes Incinerated and Wastes Used in Performance Tests | Not Applicable | Not Applicable |
| C-2 | Waste Analysis Plan | | 3.0, Section 3.2 and Appendix 3A |
| C-2a | Detailed Chemical, Physical, and/or Biological Analysis | | ↓ |

| | | Technically Adequate? | Location in Application |
|---|---|---|---|
| C-2a(1) | Parameters and Rationale | | 3.0, Section 3.2 and Appendix 3A |
| C-2a(2) | Analytical Methods | | |
| C-2a(3) | Generator-Supplied Analyses | | |
| C-2b | Additional Requirements for Wastes Generated Off-site | | |
| C-2b(1) | Parameters and Rationale to Confirm Identity of Off-site Waste | | |
| C-2b(2) | Analytical Methods to Confirm Identity of Off-site Waste | | |
| C-2b(3) | Representative Sampling of Incoming Off-site Wastes | | |
| C-2c | Methods for Collecting Samples for Detailed and Confirming Analyses | | |
| C-2d | Frequency of Analyses | | |
| C-3 | Manifest System | | Chapter 3.0, Section 3.3 |
| C-3a | Procedures for Receiving Shipments | | |
| C-3b | Response to Significant Discrepancies | | |
| C-3c | Provisions for Non-acceptance of Shipment | | |
| C-3c(1) | Non-acceptance of Undamaged Shipment | | |
| C-3c(2) | Activation of Contingency Plan for Damaged Shipment | | |
| C-4 | Tracking System | | |
| D. | Process Information | | Chapter 4.0 |
| D-1 | Containers | | 4.0, Section 4.1 |
| D-1a | Description of Containers | | 4.0, Section 4.1.1.1 |
| D-1b | Container Management Practices | | 4.0, Section 4.1.1.2 |

| | | Technically Adequate? | Location in Application |
|---|---|---|---|
| D-1c | Container Labelling | | 4.0, Section 4.1.1.2 |
| D-1d | Containment Requirements for Storing Containers | | 4.0, Section 4.1.1.3 |
| D-1d(1) | Secondary Containment System Design | | 4.0, Section 4.1.1.3 |
| D-1d(1)(a) | System Design | | 4.0, Section 4.1.1.3 |
| D-1d(1)(b) | Structural Integrity of Base | | 4.0, Section 4.1.1.4 |
| D-1d(1)(c) | Containment System Capacity | | 4.0, Section 4.1.1.6 |
| D-1d(1)(d) | Control of Run-on | | 4.0, Section 4.1.1.7 |
| D-1d(2) | Removal of Liquids from Containment System | | 4.0, Section 4.1.2 |
| D-1e | Demonstration that Containment Is Not Required Because Containers Do Not Contain Free Liquids, Wastes That Exhibit Ignitability or Reactivity, or Wastes Designated F020 - 023, F026, or F027 | | 4.0, Section 4.2 |
| D-1f | Prevention of Reaction of Ignitable, Reactive, and Incompatible Wastes in Containers | | 4.0, Section 4.3 |
| D-1f(1) | Management of Certain Reactive Wastes in Containers | | 4.0, Section 4.3.1 |
| D-1f(2) | Management of Ignitable and Certain Other Reactive Wastes in Containers | | 4.0, Section 4.3.2 |
| D-1f(3) | Design of Areas to Manage Incompatible Wastes | | 4.0, Section 4.3.3 |
| D-2 | Tank Systems | | Not Applicable |
| D-2a | Design, Installation and Assessment of Tanks Systems | | |
| D-2a(1) | Design Requirements | | |
| D-2a(2) | Integrity Assessments | | |
| D-2a(3) | Additional Requirements for Existing Tanks | | |

| | | Technically Adequate? | Location in Application | |
|---|---|---|---|---|
| D-2a(4) | Additional Requirements for New Tanks | | Not Applicable | |
| D-2a(5) | Additional Requirements for New On-ground or Underground Tanks | | | |
| D-2b | Secondary Containment and Release Detection for Tank Systems | | | |
| D-2b(1) | Requirements for All Tank Systems | | | |
| D-2b(2) | Additional Requirements for Specific Types of Systems | | | |
| D-2b(2)(a) | Vault Systems | | | |
| D-2b(2)(b) | Double-walled Tanks | | | |
| D-2b(2)(c) | Ancillary Equipment | | | |
| D-2c | Variances from Secondary Containment Requirements | | | |
| D-2d | Tank Management Practices | | | |
| D-2e | Labels or Signs | | | |
| D-2f | Air Emissions | | | |
| D-2g | Management of Ignitable or Reactive Wastes in Tank Systems | | | |
| D-2h | Management of Incompatible Wastes in Tank Systems | | | |
| D-3<br>D-4<br>D-5<br>D-6<br>D-7 | Waste Piles<br>Surface Impoundments<br>Incinerators<br>Landfills<br>Land Treatment | Not Applicable | | |
| D-8 | Air Emissions Control | | | |
| D-8a | Process Vents | | | |
| D-8a(1) | Applicability of Subpart AA Standards | | ↓ | |

| | | Technically Adequate? | Location in Application | |
|---|---|---|---|---|
| D-8a(1)(a) | Process Vents Subject to Subpart AA Standards | | Not Applicable | |
| D-8a(1)(b) | Process Vents Not Subject to Subpart AA Standards | | | |
| D-8a(1)(c) | Re-evaluating Applicability of Subpart AA Standards | | | |
| D-8a(2) | Process Vents - Demonstrating Compliance | | | |
| D-8a(2)(a) | The Basis for Meeting Limits/Reductions | | | |
| D-8a(2)(b) | Demonstrating Compliance via Selected Method | | | |
| D-8a(2)(c) | Design Information and Operating Parameters for Closed Vent Systems and Control Devices | | | |
| D-8a(2)(d) | Re-evaluating Compliance with Subpart AA Standards | | | |
| D-8b | Equipment Leaks | | | |
| D-8b(1) | Applicability of Subpart BB Standards | | | |
| D-8b(1)(a) | Equipment Subject to Subpart BB | | | |
| D-8b(1)(b) | Re-evaluating Applicability of Subpart BB Standards | | | |
| D-8b(2) | Equipment Leaks - Demonstrating Compliance | | | |
| D-8b(2)(a) | Procedures for Identifying Equipment Location and Method of Compliance, Marking Equipment, and Ensuring Records are Up-to-date | | | |
| D-8b(2)(b) | Demonstrating Compliance with D-8b(1)(a) and (2)(a) Procedures | | | |
| D-8b(2)(c) | Closed Vent Systems or Control Devices: Showing Compliance with Emission Reduction Standards | | | |
| D-8c | Tanks and Containers | | | |
| D-8c(1) | Applicability of Subpart CC Standards | | | |
| D-8c(2) | Tank Systems and Container Areas - Demonstrating Compliance | | | |

| | | Technically Adequate? | Location in Application |
|---|---|---|---|
| D-9 | Waste Minimization | | Chapter 10.0 |
| D-10 | Groundwater Monitoring for Land-based Units | Not Applicable | Not Applicable |
| E. | Releases from Solid Waste Management Units | | Chapter 2.0, Section 2.4 |
| E-1 | Solid Waste Management Units and Known and Suspected Releases of Dangerous Wastes or Constituents | | |
| E-1a | Solid Waste Management Units | | |
| E-1b | Releases | | |
| E-2 | Corrective Actions Implemented | | |
| F. | Procedures to Prevent Hazards | | Chapter 6.0 |
| F-1 | Security | | 6.0, Section 6.1 |
| F-1a | Security Procedures and Equipment | | 6.0, Section 6.1.1 |
| F-1b | Waiver | | 6.0, Section 6.1.2 |
| F-2 | Inspection Plan | | 6.0, Section 6.2 |
| F-2a | General Inspection Requirements | | 6.0, Section 6.2.1 |
| F-2b | Inspection Log | | 6.0, Section 6.2.1 |
| F-2c | Schedule for Remedial Action for Problems Revealed | | 6.0, Section 6.2.1 |
| F-2d | Specific Process or Waste Type Inspection Requirements | | 6.0, Section 6.2.2 |
| F-2d(1) | Container Inspections | | 6.0, Section 6.2.2 |
| F-2d(2) | Tank System Inspections and Corrective Actions | | Not Applicable |

| | | Technically Adequate? | Location in Application |
|---|---|---|---|
| F-2d(2)(a) | Tank System Inspections | | Not Applicable |
| F-2d(2)(b) | Tank Systems - Corrective Actions | | |
| F-2d(3) | Storage of Ignitable or Reactive Wastes | | |
| F-2d(4) | Air Emissions Control and Detection - Inspections, Monitoring, and Corrective Actions | | |
| F-2d(4)(a) | Process Vents | | |
| F-2d(4)(b) | Equipment Leaks | | |
| F-2d(4)(c) | Tanks and Containers | | |
| F-2d(5)<br>F-2d(6)<br>F-2d(7)<br>F-2d(8)<br>F-2d(9) | Waste Pile Inspection<br>Surface Impoundment Inspection<br>Incinerator Inspection<br>Landfill Inspection<br>Land Treatment Facility Inspection | Not Applicable | |
| F-3 | Preparedness and Prevention Requirements | | Chapter 6.0, Section 6.3. |
| F-3a | Equipment Requirements | | 6.0, Section 6.3.1 |
| F-3b | Aisle Space Requirement | | 6.0, Section 6.3.2 |
| F-4 | Preventive Procedures, Structures, and Equipment | | 6.0, Section 6.4 |
| F-5 | Prevention of Reaction of Ignitable, Reactive, and/or Incompatible Wastes | | 6.0, Section 6.5 |
| F-5a | Precautions to Prevent Ignition or Reaction of Ignitable or Reactive Waste | | 6.0, Section 6.5.1 |
| F-5b | Precautions for Handling Ignitable or Reactive Waste and Mixing Incompatible Wastes | | 6.0, Section 6.5.2 |
| F-5b(1) | Ignitable or Reactive Wastes In Tanks | | Not Applicable |
| F-5b(2) | Incompatible Wastes In Containers or Tanks | | |

| | | Technically Adequate? | Location in Application |
|---|---|---|---|
| G. | Contingency Plan | | Chapter 7.0 and Appendix 7A |
| G-1 | General Information | | |
| G-2 | Emergency Coordinators | | |
| G-3 | Circumstances Prompting Implementation | | |
| G-4 | Emergency Response Procedures | | |
| G-4a | Notification | | |
| G-4b | Identification of Dangerous Materials | | |
| G-4c | Hazard Assessment and Report | | |
| G-4d | Prevention of Recurrence or Spread of Fires, Explosions, or Releases | | |
| G-4f | Post-Emergency Actions | | |
| G-5 | Emergency Equipment | | |
| G-6 | Coordination Agreements | | |
| G-7 | Evacuation Plan | | |
| G-8 | Required Reports, Recordkeeping, and Certifications | | |
| G-8a | General Requirements | | |
| G-8a | Requirements for Tank Systems | | Not Applicable |
| H. | Personnel Training | | Chapter 8.0 and Appendix 8A |
| H-1 | Job Title/Job Description | | |

| | | Technically Adequate? | Location in Application |
|---|---|---|---|
| H-2 | Outline of Training Program | | Chapter 8.0 and Appendix 8A |
| H-3 | Implementation of Training Program | | ↓ |
| I. | Closure and Financial Assurance | | Chapter 11.0 |
| I-1 | Closure Plan/Financial Assurance for Closure | | 11.0, Section 11.1 |
| I-1a | Closure Performance Standard | | 11.0, Section 11.1.1 |
| I-1b | Closure Activities | | 11.0, Section 11.1.4 |
| I-1b(1) | Maximum Extent of Operation | | 11.0, Section 11.1.2 |
| I-1b(2) | Removing Dangerous Wastes | | 11.0, Section 11.1.4 |
| I-1b(3) | Decontaminating Structures, Equipment, and Soil | | 11.0, Section 11.1.4 |
| I-1b(4) | Sampling and Analysis to Identify Extent of Decontamination/ Removal and to Verify Achievement of Closure Standard | | 11.0, Section 11.1.5 |
| I-1b(4)(a) | Sampling to Confirm Decontamination of Structures and Soils | | 11.0, Section 11.1.5 |
| I-1b(5) | Other Activities | | Not Applicable |
| I-1c | Maximum Waste Inventory | | 11.0, Section 11.1.2 |
| I-1d | Closure of Waste Piles, Surface Impoundments, Incinerators, Land Treatment, and Miscellaneous Units | Not Applicable | Not Applicable |
| I-1e | Closure of Landfill Units | | ↓ |
| I-1f | Schedule for Closure | | 11.0, Section 11.2 |
| I-1g | Extension for Closure Time | | DOE/RL-91-28 |
| I-1h | Closure Cost Estimate | | DOE/RL-91-28 |

| | | Technically Adequate? | Location in Application |
|---|---|---|---|
| I-1i | Financial Assurance Mechanism for Closure | | Not Applicable |
| I-2 | Notice in Deed of Already Closed Disposal Units | | |
| I-3 | Post-Closure Plan | | |
| I-4 | Liability Requirements | | |
| I-4a | Coverage for Sudden Accidental Occurrences | | |
| I-4b | Coverage for Nonsudden Accidental Occurrences | | |
| I-4c | Request for Variance | | |
| J. | Other Federal and State Laws | | Chapter 13.0 |
| K. | Part B Certification | | Chapter 14.0 |

# CONTENTS

1.0 PART A [A] . . . . . 1-1

This page intentionally left blank.

# 1.0 PART A [A]

The original Part A, Form 3 (Revision 0), for the 616 Nonradioactive Dangerous Waste Storage Facility (616 NRDWSF) was submitted with the original Part B on November 1, 1985 (DOE-RL 1985). Revision 0 included the additional dangerous waste units addressed in the original Part B permit application (the Nonradioactive Dangerous Waste Landfill, the 2727-S Storage Facility, the proposed 616 NRDWSF, and three demolition sites).

Revision 1, submitted on August 15, 1987, provided individual Part A, Form 3's for each of the storage units addressed in the original Part B permit application.

Revision 2, submitted on November 16, 1987, was prepared to include the Westinghouse Hanford Company as co-operator for the 616 NRDWSF with the U.S. Department of Energy, Richland Operations Office.

Revision 3, submitted on July 31, 1989, was prepared to ensure agreement between waste types and annual waste quantities as identified in Revision 2, and the Hanford Site Annual Dangerous Waste Report submitted in March 1989 to the Washington State Department of Ecology (Ecology).

Revision 4, submitted on June 21, 1990, was prepared to ensure agreement between annual waste quantities as identified in Revision 3, and the Hanford Site Annual Dangerous Waste Report submitted in March 1990 to Ecology. The 26 new dangerous waste numbers identified for toxicity characteristics leaching procedure testing (55 FR 61) were added. Revision 4 also increased the design capacity for storage (S01) from 26,500 gallons to 28,635 gallons to reflect a new storage configuration.

Revision 5, submitted on September 8, 1993, added 10 dangerous waste numbers and removed 10 dangerous waste numbers per the revised Washington Administrative Code (WAC) 173-303.

Revision 6, submitted on October 1, 1996, provided a new co-operator (Fluor Daniel Hanford, Inc.) for the 616 NRDWSF.

Revision 7, submitted on March 4, 1997, was prepared to address editorial comments received from Ecology on Revision 6, and is included in this revised permit application documentation.

This page intentionally left blank.

Please print or type in the unshaded areas only
*(Fill-in areas are spaced for elite type, i.e., 12 character/inch).*

# DANGEROUS WASTE PERMIT APPLICATION

1. EPA/STATE I.D. NUMBER: W A 7 8 9 0 0 0 8 9 6 7

FOR OFFICIAL USE ONLY

| APPLICATION APPROVED | DATE RECEIVED *(mo., day, & yr.)* | COMMENTS |
|---|---|---|
| | | |

## II. FIRST OR REVISED APPLICATION

Place an "X" in the appropriate box in A or B below (mark one box only) to indicate whether this is the first application you are submitting for your facility or a revised application. If this is your first application and you already know your facility's EPA/STATE I.D. Number, or if this is a revised application, enter your facility's EPA/STATE I.D. Number in Section I above.

A. FIRST APPLICATION *(place an "X" below and provide the appropriate date)*

☐ 1. EXISTING FACILITY *(See instructions for definition of "existing" facility. Complete item below.)*

MO. 0 3 | DAY 2 2 | YR. 4 3 * FOR EXISTING FACILITIES, PROVIDE THE DATE *(mo., day, & yr.)* OPERATION BEGAN OR THE DATE CONSTRUCTION COMMENCED *(use the boxes to the left)*

* The date construction of the Hanford Facility commenced.

☐ 2. NEW FACILITY *(Complete item below)*

MO. | DAY | YR. FOR NEW FACILITIES, PROVIDE THE DATE, *(mo., day, & yr)* OPERATION BEGAN OR IS EXPECTED TO BEGIN

B. REVISED APPLICATION *(place an "X" below and complete Section I above)*

☐ 1. FACILITY HAS AN INTERIM STATUS PERMIT

☒ 2. FACILITY HAS A FINAL PERMIT

## III. PROCESSES - CODES AND CAPACITIES

A. PROCESS CODE - Enter the code from the list of process codes below that best describes each process to be used at the facility. Ten lines are provided for entering codes. If more lines are needed, enter the code(s) in the space provided. If a process will be used that is not included in the list of codes below, then describe the process *(including its design capacity)* in the space provided on the *(Section III-C)*.

B. PROCESS DESIGN CAPACITY - For each code entered in column A enter the capacity of the process.

1. AMOUNT - Enter the amount.
2. UNIT OF MEASURE - For each amount entered in column B(1), enter the code from the list of unit measure codes below that describes the unit of measure used. Only the units of measure that are listed below should be used.

| PROCESS | PROCESS CODE | APPROPRIATE UNITS OF MEASURE FOR PROCESS DESIGN CAPACITY |
|---|---|---|
| **Storage:** | | |
| CONTAINER (barrel, drum, etc) | S01 | GALLONS OR LITERS |
| TANK | S02 | GALLONS OR LITERS |
| WASTE PILE | S03 | CUBIC YARDS OR CUBIC METERS |
| SURFACE IMPOUNDMENT | S04 | GALLONS OR LITERS |
| **Disposal:** | | |
| INJECTION WELL | D80 | GALLONS OR LITERS |
| LANDFILL | D81 | ACRE-FEET *(the volume that would cover one acre to a depth of one foot)* OR HECTARE-METER |
| LAND APPLICATION | D82 | *ACRES OR HECTARES* |
| OCEAN DISPOSAL | D83 | GALLONS PER DAY OR LITERS PER DAY |
| SURFACE IMPOUNDMENT | D84 | GALLONS OR LITERS |

| PROCESS | PROCESS CODE | APPROPRIATE UNITS OF MEASURE FOR PROCESS DESIGN CAPACITY |
|---|---|---|
| **Treatment:** | | |
| TANK | T01 | GALLONS PER DAY OR LITERS PER DAY |
| SURFACE IMPOUNDMENT | T02 | GALLONS PER DAY OR LITERS PER DAY |
| INCINERATOR | T03 | TONS PER HOUR OR METRIC TONS PER HOUR; GALLONS PER HOUR OR LITERS PER HOUR |
| OTHER (Use for physical, chemical, thermal or biological treatment processes not occurring in tanks, surface impoundments or incinerators. Describe the processes in the space provided; Section III-C.) | T04 | GALLONS PER DAY OR LITERS PER DAY |

| UNIT OF MEASURE | UNIT OF MEASURE CODE | UNIT OF MEASURE | UNIT OF MEASURE CODE | UNIT OF MEASURE | UNIT OF MEASURE CODE |
|---|---|---|---|---|---|
| GALLONS | G | LITERS PER DAY | V | ACRE-FEET | A |
| LITERS | L | TONS PER HOUR | D | HECTARE-METER | F |
| CUBIC YARDS | Y | METRIC TONS PER HOUR | W | ACRES | B |
| CUBIC METERS | C | GALLONS PER HOUR | E | HECTARES | Q |
| GALLONS PER DAY | U | LITERS PER HOUR | H | | |

EXAMPLE FOR COMPLETING SECTION III *(shown in line numbers X-1 and X-2 below): A facility has two storage tanks, one tank can hold 200 gallons and the other can hold 400 gallons.* The facility also has an incinerator that can burn up to 20 gallons per hour.

| LINE NUMBER | A. PROCESS CODE *(from list above)* | B. PROCESS DESIGN CAPACITY 1. AMOUNT *(specify)* | B. 2. UNIT OF MEASURE *(enter code)* | FOR OFFICIAL USE ONLY | LINE NUMBER | A. PROCESS CODE *(from list above)* | B. PROCESS DESIGN CAPACITY 1. AMOUNT *(specify)* | B. 2. UNIT OF MEASURE *(enter code)* | FOR OFFICIAL USE ONLY |
|---|---|---|---|---|---|---|---|---|---|
| X-1 | S 0 2 | 600 | G | | 5 | | | | |
| X-2 | T 0 3 | 20 | E | | 6 | | | | |
| | 0 1 | 108,395 | L | | 7 | | | | |
| 2 | | | | | 8 | | | | |
| 3 | | | | | 9 | | | | |
| 4 | | | | | 10 | | | | |

Continued from the front.

III. PROCESSES (continued)

C. SPACE FOR ADDITIONAL PROCESS CODES OR FOR DESCRIBING OTHER PROCESS (code "T04"). FOR EACH PROCESS ENTERED HERE INCLUDE DESIGN CAPA(

S01

The 616 Nonradioactive Dangerous Waste Storage Facility (616 NRDWSF) began waste management operations in September of 1986. The 616 NRDWSF is located between the 200 East and 200 West Areas of the Hanford Facility. The 616 NRDWSF provides container storage for nonradioactive dangerous waste generated in the research and development laboratories, process operations, construction, waste site cleanup/remediation, environmental monitoring, maintenance, and transportation functions throughout the Hanford Facility and approved offsite facilities. Waste is only stored at the 616 NRDWSF until arrangements can be made to ship the waste to an offsite treatment, storage, and/or disposal facility. The 616 NRDWSF stores nonradioactive dangerous waste in containers that meet U.S. Department of Transportation or equivalent requirements.

The maximum process design capacity for container storage at the 616 NRDWSF is 108,395 liters (28,635 gallons).

IV. DESCRIPTION OF DANGEROUS WASTES

A. DANGEROUS WASTE NUMBER - Enter the four digit number from Chapter 173-303 WAC for each listed dangerous waste you will handle. If you handle dangerous wastes which are not listed in Chapter 173-303 WAC, enter the four digit number(s) that describes the characteristics and/or the toxic contaminants of those dangerous wastes.

B. ESTIMATED ANNUAL QUANTITY - For each listed waste entered in column A estimate the quantity of that waste that will be handled on an annual basis. For each characteristic or toxic contaminant entered in column A estimate the total annual quantity of all the non-listed waste(s) that will be handled which possess that characteristic or contaminant.

C. UNIT OF MEASURE - For each quantity entered in column B enter the unit of measure code. Units of measure which must be used and the appropriate codes are:

| ENGLISH UNIT OF MEASURE | CODE | METRIC UNIT OF MEASURE | CODE |
|---|---|---|---|
| POUNDS | P | KILOGRAMS | K |
| TONS | T | METRIC TONS | M |

If facility records use any other unit of measure for quantity, the units of measure must be converted into one of the required units of measure taking into account the appropriate density or specific gravity of the waste.

D. PROCESSES

1. PROCESS CODES:

For listed dangerous waste: For each listed dangerous waste entered in column A select the code(s) from the list of process codes contained in Section III to indicate how the waste will be stored, treated, and/or disposed of at the facility.

For non-listed dangerous wastes: For each characteristic or toxic contaminant entered in Column A, select the code(s) from the list of process codes contained in Section III to indicate all the processes that will be used to store, treat, and/or dispose of all the non-listed dangerous wastes that possess that characteristic or toxic contaminant.

Note: Four spaces are provided for entering process codes. If more are needed: (1) Enter the first three as described above; (2) Enter "000" in the extreme right box of Item IV-D(1); and (3) Enter in the space provided on page 4, the line number and the additional code(s).

2. PROCESS DESCRIPTION: If a code is not listed for a process that will be used, describe the process in the space provided on the form.

NOTE: DANGEROUS WASTES DESCRIBED BY MORE THAN ONE DANGEROUS WASTE NUMBER - Dangerous wastes that can be described by more than one Waste Number shall be described on the form as follows:

1. Select one of the Dangerous Waste Numbers and enter it in column A. On the same line complete columns B, C, and D by estimating the total annual quantity of the waste and describing all the processes to be used to treat, store, and/or dispose of the waste.
2. In column A of the next line enter the other Dangerous Waste Number that can be used to describe the waste. In column D(2) on that line enter "included with above" and make no other entries on that line.
3. Repeat step 2 for each other Dangerous Waste Number that can be used to describe the dangerous waste.

EXAMPLE FOR COMPLETING SECTION IV *(shown in line numbers X-1, X-2, X-3, and X-4 below)* - A facility will treat and dispose of an estimated 900 pounds per year of chrome shavings from leather tanning and finishing operation. In addition, the facility will treat and dispose of three non-listed wastes. Two wastes are corrosive only and there will be an estimated 200 pounds per year of each waste. The other waste is corrosive and ignitable and there will be an estimated 100 pounds per year of that waste. Treatment will be in an incinerator and disposal will be in a landfill.

| LINE NO. | A. DANGEROUS WASTE NO. *(enter code)* | B. ESTIMATED ANNUAL QUANTITY OF WASTE | C. UNIT OF MEASURE *(enter code)* | D. PROCESSES 1. PROCESS CODES *(enter)* | D. PROCESSES 2. PROCESS DESCRIPTION *(if a code is not entered in D(1))* |
|---|---|---|---|---|---|
| X-1 | K 0 5 4 | 900 | P | T 0 3 D 8 0 | |
| X-2 | D 0 0 2 | 400 | P | T 0 3 D 8 0 | |
| X-3 | D 0 0 1 | 100 | P | T 0 3 D 8 0 | |
| X-4 | D 0 0 2 | | | T 0 3 D 8 0 | *included with above* |

 CONTINUE ON PAGE 3

Continued from page 2.
NOTE: *Photocopy this page before completing if you have more than 26 wastes to list.*

IMBER *(entered from page 1)*

7 8 9 0 0 0 8 9 6 7

IV. DESCRIPTION OF DANGEROUS WASTES (continued)

| LINE NO. | A. DANGEROUS WASTE NO. *(enter code)* | B. ESTIMATED ANNUAL QUANTITY OF WASTE | C. UNIT OF MEASURE *(enter code)* | D. PROCESSES 1. PROCESS CODES *(enter)* | D. PROCESSES 2. PROCESS DESCRIPTION *(if a code is not entered in D(1))* |
|---|---|---|---|---|---|
| 1 | D001 | 65,000 | K | S01 | Storage-Container |
| 2 | D002 | 50,000 | | | |
| 3 | D003 | 5,000 | | | |
| 4 | D004 | | | | |
| 5 | D005 | | | | |
| 6 | D006 | 20,000 | | | |
| 7 | D007 | 35,000 | | | |
| 8 | D008 | 30,000 | | | |
| 9 | D009 | 17,000 | | | |
| | 010 | 5,000 | | | |
| 11 | through | | | | |
| 12 | D043 | | | | |
| 13 | WSC2 | 1,000 | | | |
| 14 | WP01 | 24,000 | | | |
| 15 | WP02 | 5,000 | | | |
| 16 | WP03 | 4,000 | | | |
| 17 | WT01 | 80,000 | | | |
| 18 | WT02 | 114,000 | | | |
| 19 | F001 | 4,000 | | | |
| 20 | F002 | 13,000 | | | |
| 21 | F003 | 26,000 | | | |
| 22 | F004 | 3,000 | | | |
| 23 | F005 | 26,000 | | | |
| | 006 | 500 | | | |
| 25 | | | | | |
| 26 | | | | | |

Continued from page 2.
*NOTE: Photocopy this page before completing if you have more than 26 wastes to list.*

I.D. NUMBER *(entered from page 1)*: WA7890008967

IV. DESCRIPTION OF DANGEROUS WASTES (continued)

| LINE NO. | A. DANGEROUS WASTE NO. *(enter code)* | B. ESTIMATED ANNUAL QUANTITY OF WASTE | C. UNIT OF MEASURE *(enter code)* | D. PROCESSES 1. PROCESS CODES *(enter)* | D. PROCESSES 2. PROCESS DESCRIPTION *(if a code is not entered in D(1))* |
|---|---|---|---|---|---|
| 1 | F007 | 500 | K | S01 | Storage-Container (Cont.) |
| 2 | F008 | | | | |
| 3 | through | | | | |
| 4 | F012 | | | | |
| 5 | F019 | | | | |
| 6 | through | | | | |
| 7 | F026 | | | | |
| 8 | F027 | 800 | | | |
| 9 | F028 | 500 | | | |
| 10 | W001 | 2,500 | | | |
| 11 | P001 | 500 | | | |
| 12 | through | | | | |
| 13 | P018 | | | | |
| 14 | P020 | | | | |
| 15 | through | | | | |
| 16 | P024 | | | | |
| 17 | P026 | | | | |
| 18 | through | | | | |
| 19 | P031 | | | | |
| 20 | P033 | | | | |
| 21 | P034 | | | | |
| 22 | P036 | | | | |
| 23 | through | | | | |
| 24 | P051 | | | | |
| 25 | P054 | | | | |
| 26 | P056 | | | | |

Continued from page 2.
*; Photocopy this page before completing if you have more than 26 wastes to list.*

UMBER *(entered from page 1)*

| W | A | 7 | 8 | 9 | 0 | 0 | 0 | 8 | 9 | 6 | 7 |
|---|---|---|---|---|---|---|---|---|---|---|---|

IV. DESCRIPTION OF DANGEROUS WASTES (continued)

| LINE NO. | A. DANGEROUS WASTE NO. *(enter code)* | B. ESTIMATED ANNUAL QUANTITY OF WASTE | C. UNIT OF MEASURE *(enter code)* | D. PROCESSES 1. PROCESS CODES *(enter)* | D. PROCESSES 2. PROCESS DESCRIPTION *(if a code is not entered in D(1))* |
|---|---|---|---|---|---|
| 1 | P060 | 500 | K | S01 | Storage-Container (Cont.) |
| 2 | P062 | | | | |
| 3 | through | | | | |
| 4 | P078 | | | | |
| 5 | P081 | | | | |
| 6 | P082 | | | | |
| 7 | P084 | | | | |
| 8 | P085 | | | | |
| 9 | P087 | | | | |
| | P088 | | | | |
| 11 | P089 | | | | |
| 12 | P092 | | | | |
| 13 | through | | | | |
| 14 | P099 | | | | |
| 15 | P101 | | | | |
| 16 | through | | | | |
| 17 | P116 | | | | |
| 18 | P118 | | | | |
| 19 | through | | | | |
| 20 | P123 | | | | |
| 21 | U001 | | | | |
| 22 | U002 | 1,000 | | | |
| 23 | U003 | 1,000 | | | |
| | U004 | 500 | | | |
| 25 | through | | | | |
| 26 | U012 | | | | |

Continued from page 2.
*NOTE: Photocopy this page before completing if you have more than 26 wastes to list.*

I.D. NUMBER *(entered from page 1)*

| W | A | 7 | 8 | 9 | 0 | 0 | 0 | 8 | 9 | 6 | 7 |
|---|---|---|---|---|---|---|---|---|---|---|---|

IV. DESCRIPTION OF DANGEROUS WASTES (continued)

| LINE NO. | A. DANGEROUS WASTE NO. *(enter code)* | B. ESTIMATED ANNUAL QUANTITY OF WASTE | C. UNIT OF MEASURE *(enter code)* | D. PROCESSES 1. PROCESS CODES *(enter)* | D. PROCESSES 2. PROCESS DESCRIPTION *(if a code is not entered in D(1))* |
|---|---|---|---|---|---|
| 1 | U014 | 500 | K | S01 | Storage-Container (Cont.) |
| 2 | U015 | | | | |
| 3 | through | | | | |
| 4 | U031 | | | | |
| 5 | U032 | 1,000 | | | |
| 6 | U033 | 500 | | | |
| 7 | through | | | | |
| 8 | U039 | | | | |
| 9 | U041 | | | | |
| 10 | U042 | | | | |
| 11 | U043 | | | | |
| 12 | U044 | 1,000 | | | |
| 13 | U045 | 500 | | | |
| 14 | through | | | | |
| 15 | U050 | | | | |
| 16 | U051 | 2,000 | | | |
| 17 | U052 | 500 | | | |
| 18 | U053 | | | | |
| 19 | U055 | | | | |
| 20 | through | | | | |
| 21 | U064 | | | | |
| 22 | U066 | | | | |
| 23 | through | | | | |
| 24 | U099 | | | | |
| 25 | U101 | | | | |
| 26 | U102 | | | | |

Continued from page 2.
*NOTE: Photocopy this page before completing if you have more than 26 wastes to list.*

UMBER *(entered from page 1)*

| W | A | 7 | 8 | 9 | 0 | 0 | 0 | 8 | 9 | 6 | 7 |
|---|---|---|---|---|---|---|---|---|---|---|---|

IV. DESCRIPTION OF DANGEROUS WASTES (continued)

| LINE NO. | A. DANGEROUS WASTE NO. *(enter code)* | B. ESTIMATED ANNUAL QUANTITY OF WASTE | C. UNIT OF MEASURE *(enter code)* | D. PROCESSES 1. PROCESS CODES *(enter)* | D. PROCESSES 2. PROCESS DESCRIPTION *(if a code is not entered in D(1))* |
|---|---|---|---|---|---|
| 1 | U103 | 500 | K | S01 | Storage-Container (Cont.) |
| 2 | U105 | | | | |
| 3 | through | | | | |
| 4 | U132 | | | | |
| 5 | U133 | 2,000 | | | |
| 6 | U134 | 1,000 | | | |
| 7 | U135 | 500 | | | |
| 8 | through | | | | |
| 9 | U138 | | | | |
| | U140 | | | | |
| 11 | through | | | | |
| 12 | U144 | | | | |
| 13 | U145 | 1,000 | | | |
| 14 | U146 | 500 | | | |
| 15 | through | | | | |
| 16 | U150 | | | | |
| 17 | U151 | 3,000 | | | |
| 18 | U152 | 500 | | | |
| 19 | U153 | 500 | | | |
| 20 | U154 | 1,000 | | | |
| 21 | U155 | 500 | | | |
| 22 | through | | | | |
| 23 | U174 | | | | |
| | 176 | | | | |
| 25 | through | | | | |
| 26 | U194 | | | | |

Continued from page 2.
*NOTE: Photocopy this page before completing if you have more than 26 wastes to list.*

I.D. NUMBER *(entered from page 1)*

| W | A | 7 | 8 | 9 | 0 | 0 | 0 | 8 | 9 | 6 | 7 |
|---|---|---|---|---|---|---|---|---|---|---|---|

IV. DESCRIPTION OF DANGEROUS WASTES (continued)

| LINE NO. | A. DANGEROUS WASTE NO. *(enter code)* | B. ESTIMATED ANNUAL QUANTITY OF WASTE | C. UNIT OF MEASURE *(enter code)* | D. PROCESSES 1. PROCESS CODES *(enter)* | D. PROCESSES 2. PROCESS DESCRIPTION *(If a code is not entered in D(1))* |
|---|---|---|---|---|---|
| 1 | U196 | 500 | K | S01 | Storage-Container (Cont.) |
| 2 | U197 | | | | |
| 3 | U200 | | | | |
| 4 | through | | | | |
| 5 | U222 | | | | |
| 6 | U223 | 1,500 | | | |
| 7 | U225 | 1,500 | | | |
| 8 | U226 | 3,000 | | | |
| 9 | U227 | 500 | | | |
| 10 | U228 | 1,000 | | | |
| 11 | U232 | 500 | | | |
| 12 | U233 | 500 | | | |
| 13 | U234 | 500 | | | |
| 14 | U235 | 1,000 | | | |
| 15 | U236 | 1,000 | | | |
| 16 | U237 | 1,000 | | | |
| 17 | U238 | 500 | | | |
| 18 | U239 | 1,000 | | | |
| 19 | U240 | 5,000 | | | |
| 20 | U243 | 500 | | | |
| 21 | U244 | 1,000 | | | |
| 22 | U245 | 500 | | | |
| 23 | through | | | | |
| 24 | U249 | | | | |
| 25 | | | | | |
| 26 | | | | | |

Continued from page 2.
*NOTE: Photocopy this page before completing if you have more than 26 wastes to list.*

UMBER *(entered from page 1)* 7 8 9 0 0 0 8 9 6 7

IV. DESCRIPTION OF DANGEROUS WASTES (continued)

| LINE NO. | A. DANGEROUS WASTE NO. *(enter code)* | B. ESTIMATED ANNUAL QUANTITY OF WASTE | C. UNIT OF MEASURE *(enter code)* | D. PROCESSES 1. PROCESS CODES *(enter)* | | | | D. PROCESSES 2. PROCESS DESCRIPTION *(If a code is not entered in D(1))* |
|---|---|---|---|---|---|---|---|---|
| 1 | U328 | 500 | K | S01 | | | | Storage-Container (Cont.) |
| 2 | U353 | ↓ | ↓ | ↓ | | | | ↓ |
| 3 | U359 | ↓ | ↓ | ↓ | | | | Included With Above |
| 4 | | | | | | | | |
| 5 | | | | | | | | |
| 6 | | | | | | | | |
| 7 | | | | | | | | |
| 8 | | | | | | | | |
| 9 | | | | | | | | |
| | | | | | | | | |
| 11 | | | | | | | | |
| 12 | | | | | | | | |
| 13 | | | | | | | | |
| 14 | | | | | | | | |
| 15 | | | | | | | | |
| 16 | | | | | | | | |
| 17 | | | | | | | | |
| 18 | | | | | | | | |
| 19 | | | | | | | | |
| 20 | | | | | | | | |
| 21 | | | | | | | | |
| 22 | | | | | | | | |
| 23 | | | | | | | | |
| | | | | | | | | |
| 25 | | | | | | | | |
| 26 | | | | | | | | |

Continued from the front.

IV. DESCRIPTION OF DANGEROUS WASTES (continued)

E. USE THIS SPACE TO LIST ADDITIONAL PROCESS CODES FROM SECTION D(1) ON PAGE 3.

The 616 NRDWSF is used for the storage of nonradioactive dangerous waste generated on the Hanford Facility and approved offsite facilities. The waste could consist of listed waste, waste from nonspecific sources, characteristic waste, and state-only waste.

V. FACILITY DRAWING Refer to attached drawing(s).

All existing facilities must include in the space provided on page 5 a scale drawing of the facility *(see instructions for more detail)*.

VI. PHOTOGRAPHS Refer to attached photograph(s)

All existing facilities must include photographs *(aerial or ground-level)* that clearly delineate all existing structures; existing storage, treatment and disposal areas; and sites of future storage, treatment or disposal areas *(see instructions for more detail)*.

VII. FACILITY GEOGRAPHIC LOCATION This information is provided on the attached drawing(s) and photograph(s).

| LATITUDE *(degrees, minutes, & seconds)* | LONGITUDE *(degrees, minutes, & seconds)* |
|---|---|
| | |

VIII. FACILITY OWNER

[X] A. If the facility owner is also the facility operator as listed in Section VII on Form 1, "General Information", place an "X" in the box to the left and skip to Section IX below.

B. If the facility owner is not the facility operator as listed in Section VII on Form 1, complete the following items:

| 1. NAME OF FACILITY'S LEGAL OWNER | 2. PHONE NO. *(area code & no.)* |
|---|---|
| | |

| 3. STREET OR P.O. BOX | 4. CITY OR TOWN | 5. ST. | 6. ZIP CODE |
|---|---|---|---|
| | | | |

IX. OWNER CERTIFICATION

*I certify under penalty of law that I have personally examined and am familiar with the information submitted in this and all attached documents, and that based on my inquiry of those individuals immediately responsible for obtaining the information, I believe that the submitted information is true, accurate, and complete. I am aware that there are significant penalties for submitting false information, including the possibility of fine and imprisonment.*

| NAME *(print or type)* | SIGNATURE | DATE SIGNED |
|---|---|---|
| John D. Wagoner, Manager<br>U.S. Department of Energy<br>Richland Operations Office | John D. Wagoner | 3/4/97 |

X. OPERATOR CERTIFICATION

*I certify under penalty of law that I have personally examined and am familiar with the information submitted in this and all attached documents, and that based on my inquiry of those individuals immediately responsible for obtaining the information, I believe that the submitted information is true, accurate, and complete. I am aware that there are significant penalties for submitting false information, including the possibility of fine and imprisonment.*

| NAME *(print or type)* | SIGNATURE | DATE SIGNED |
|---|---|---|
| SEE ATTACHMENT | | |

 CONTINUE ON PAGE 5

## X. OPERATOR CERTIFICATION

I certify under penalty of law that I have personally examined and am familiar with the information submitted in this and all attached documents, and that based on my inquiry of those individuals immediately responsible for obtaining the information, I believe that the submitted information is true, accurate, and complete. I am aware that there are significant penalties for submitting false information, including the possibility of fine and imprisonment.

John D. Wagoner

Owner/Operator
John D. Wagoner, Manager
U.S. Department of Energy
Richland Operations Office

3/4/97
Date

Co-operator
H. J. Hatch,
President and Chief Executive Officer
Fluor Daniel Hanford, Inc.

3/3/97
Date

# 616 Nonradioactive Dangerous Waste Storage Facility

## Site Plan

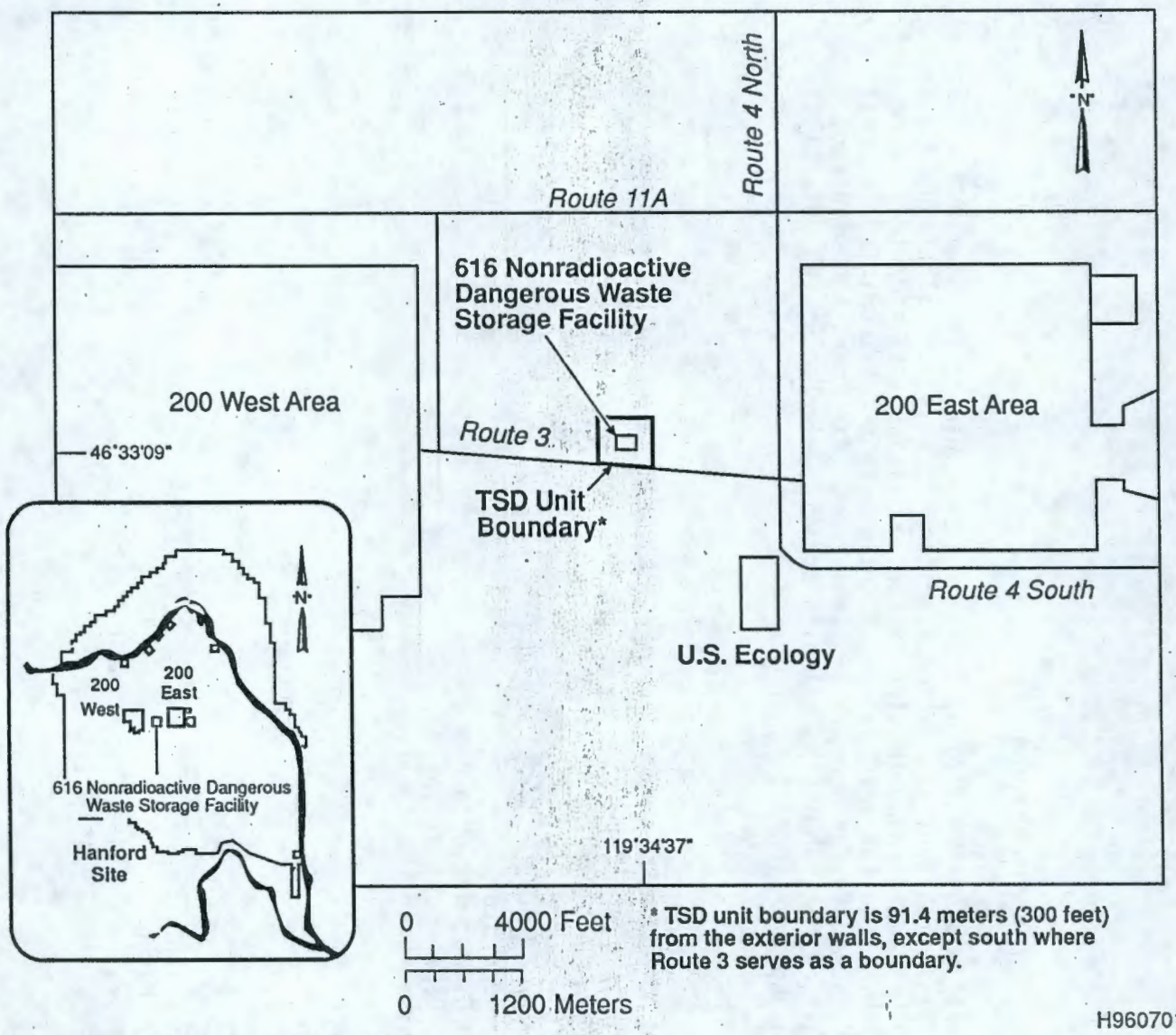


* TSD unit boundary is 91.4 meters (300 feet) from the exterior walls, except south where Route 3 serves as a boundary.

H96070161.8

Note: To convert feet to meters, multiply by 0.3048.
To convert inches to centimeters, mulitply by 2.54.

# 616 Nonradioactive Dangerous Waste Storage Facility Floor Plan

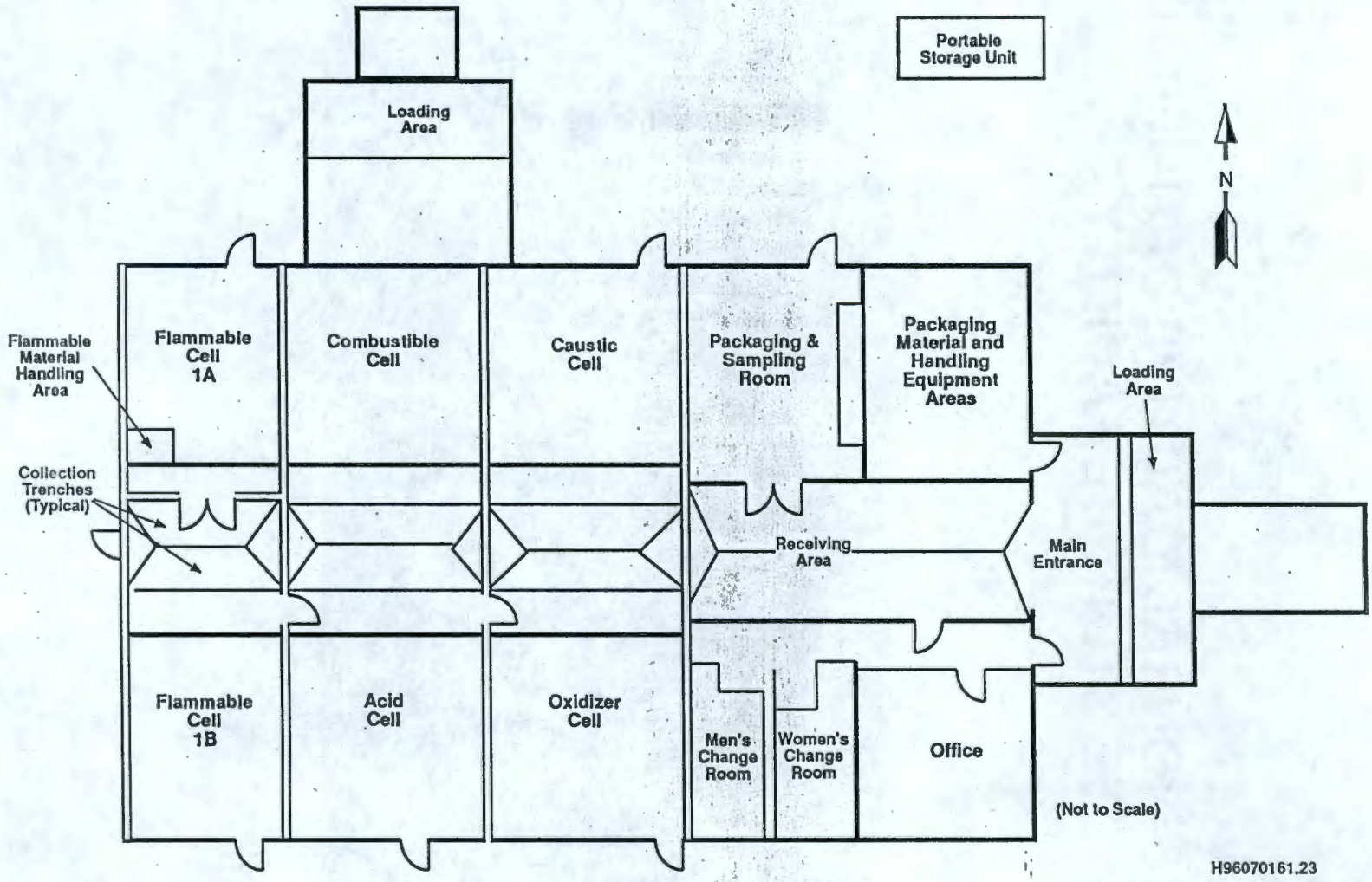

# 616 NONRADIOACTIVE DANGEROUS WASTE STORAGE FACILITY

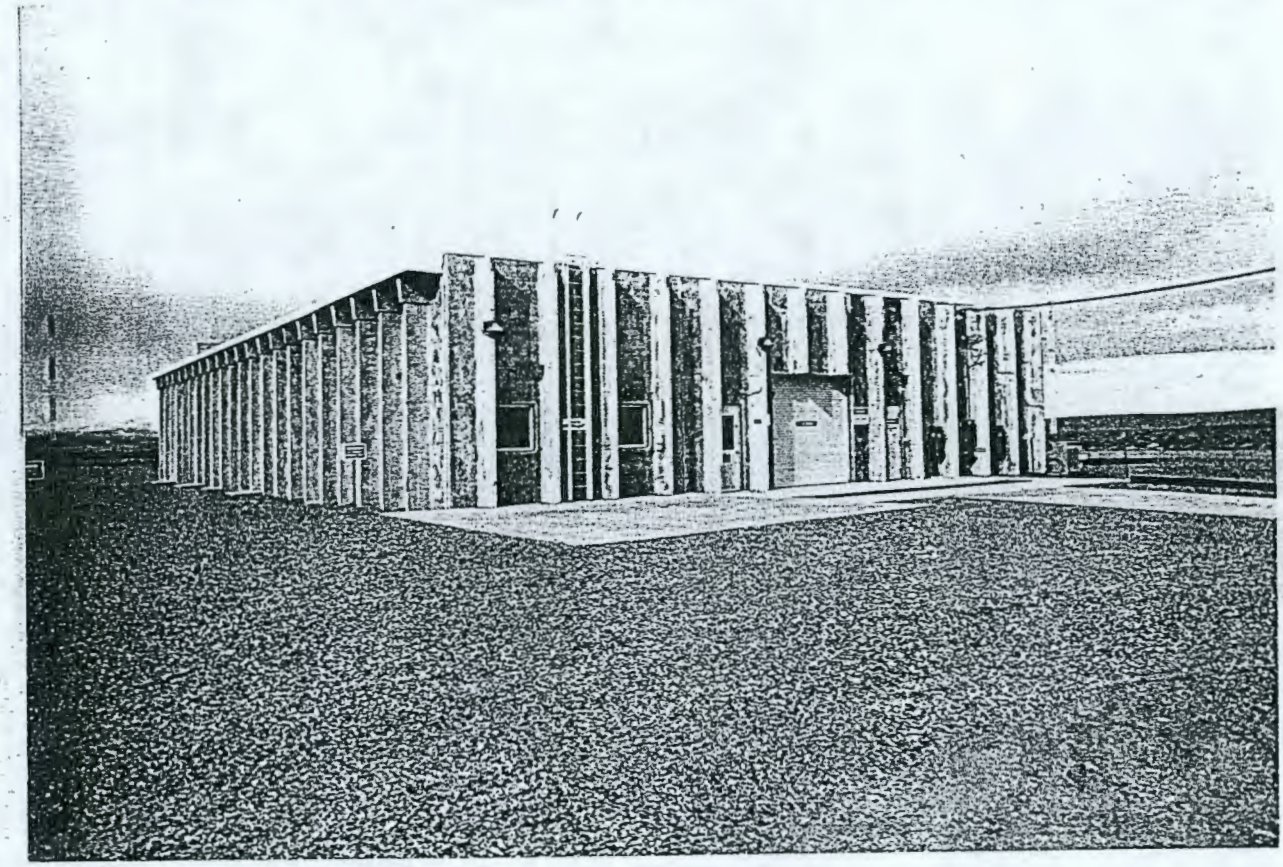

46°33'09"
119°34'37"

8700742-42CN
(PHOTO TAKEN 1987)

## CONTENTS

2.0 FACILITY DESCRIPTION AND GENERAL PROVISIONS [B and E] . . . . . 2-1

2.1 THE 616 NONRADIOACTIVE DANGEROUS WASTE STORAGE FACILITY DESCRIPTION [B-1 and B-1a] . . . . . 2-1
2.1.1 Office and Change Rooms . . . . . 2-2
2.1.2 Storage Cells . . . . . 2-2
2.1.3 Packaging and Sampling Room . . . . . 2-4
2.1.4 Packaging Material and Handling Equipment Area . . . . . 2-5
2.1.5 Receiving Area . . . . . 2-6
2.1.6 Loading and Unloading Areas . . . . . 2-6
2.1.7 Other Environmental Permits . . . . . 2-7
2.1.8 Construction Schedule [B-1(b)] . . . . . 2-7

2.2 TOPOGRAPHIC MAPS [B-2] . . . . . 2-7

2.3 TRAFFIC INFORMATION [B-4] . . . . . 2-7

2.4 RELEASE FROM SOLID WASTE MANAGEMENT UNITS [E] . . . . . 2-7

## APPENDIX

2A TOPOGRAPHIC MAP . . . . . APP 2A-i

## FIGURES

2-1. The 616 Nonradioactive Dangerous Waste Storage Facility Location . . . . . F2-1
2-2. The 616 Nonradioactive Dangerous Waste Storage Facility Floor Plan . . . . . F2-2
2-3. The 616 Nonradioactive Dangerous Waste Storage Facility Heating, Ventilation, and Air Conditioning Schematic . . . . . F2-3
2-4. Waste Storage Compatibility by Hazard Class . . . . . F2-4
2-5. Diagram of French Drain . . . . . F2-5

This page intentionally left blank.

# 2.0 FACILITY DESCRIPTION AND GENERAL PROVISIONS [B and E]

This chapter provides a general overview of the 616 NRDWSF, including the following:

- General description
- Topography
- Traffic information
- Solid waste management units.

A more detailed discussion of the waste types and known characteristics of the waste that the 616 NRDWSF stores, and the identification of the methods of storage are provided in Chapters 3.0 and 4.0, respectively.

## 2.1 THE 616 NONRADIOACTIVE DANGEROUS WASTE STORAGE FACILITY DESCRIPTION [B-1 and B-1a]

The 616 NRDWSF is a permanent structure constructed of precast concrete double-tee wall and roof panels. The construction specifications and design drawings for this storage unit are included in Appendices 4A and 4B. The 616 NRDWSF is located approximately 61 meters north of Route 3, across from the 609-A Fire Station, between the 200 East and 200 West Areas (Figure 2-1). The storage unit boundary is considered to be 91.4 meters from the exterior walls, except to the south, where Route 3 serves as the boundary (Drawing H-13-000014 in Appendix 2A). The storage building consists of the following areas (Figure 2-2):

- Office and change rooms
- Storage cells:
  - Caustic
  - Oxidizer
  - Combustible
  - Acid
  - Flammable 1-A
  - Flammable 1-B.
- Packaging and sampling room
- Packaging material and handling equipment area
- Receiving area
- Loading and unloading areas.

Each area is addressed in the following sections.

### 2.1.1 Office and Change Rooms

The office and change rooms (Figure 2-2) serve as the operations center for the 616 NRDWSF. The 616 NRDWSF Operations supervisor (616 NRDWSF supervisor) occupies the office. The office and change rooms are serviced by an independent heat pump designed to provide positive air pressure to the chemical storage cells (Figure 2-3). This system reduces the potential of exposing personnel in the office and change rooms to airborne chemical contaminants from the stored waste. Design drawings of the 616 NRDWSF heating, ventilation, and air conditioning systems are provided in Appendix 4B.

### 2.1.2 Storage Cells

Six storage cells (Figure 2-2) are provided for the storage of dangerous waste at the 616 NRDWSF. Waste is stored in cells which, in the event of a release or offnormal event, are designed and constructed to minimize damage to personnel, the environment, and the storage unit.

The storage cells have sealed concrete slabs sloped to a collection trench for the accumulation of released liquids (Chapter 4.0, Section 4.1.1.4). Each collection trench is covered by a removable carbon steel grate (shown in Chapter 4.0, Figure 4-1). Containment systems for free liquid or waste designated as F020-F027 are required to have sufficient capacity to contain 10 percent of the volume of the stored waste volume or the volume of the largest container, whichever is greater (WAC 173-303-630).

Containment systems at the 616 NRDWSF include cell trenches and floor areas up to the top of containment curbs. The collection trenches in the 616 NRDWSF are capable of holding between 348 and 954 liters of liquid for each cell as the width of each cell varies. The individual cell containment systems are capable of holding between 2,411 and 3,464 liters (Chapter 4.0, Section 4.1.1.6).

A curb surrounds each cell with a sloped ramp on one end for access. The curb height varies between approximately 5.0 and 10.0 centimeters as the slope of the floor varies. The curb provides additional containment in the event of a major spill that would exceed the capacity of the trench. Collected or contained liquids can be removed by using hand pumps, absorbents, or vacuum trucks. Actions to be taken in response to a spill or discharge are detailed in the Building Emergency Plan - 616 Building provided in Appendix 7A.

The floors of the storage cells are sealed as detailed in Chapter 4.0, Section 4.1.1.4. The walls of the storage cells are painted to a height of 2.4 meters. The storage areas are separated from the rest of the unit by a 2-hour fire-rated concrete masonry unit firewall. Access is provided by a 1 1/2-hour fire-rated personnel door and a 1 1/2-hour fire-rated rollup door. All of the rollup doors in the firewalls are equipped for automatic closure in the event of a fire. The fire protection system for the storage cells is a wet-pipe sprinkler system designed to meet Extra Hazard, Group II requirements, as specified in the National Fire Protection Association's

*National Fire Codes* (NFPA 1989). All of the storage cells have emergency exit doors with fire alarm pull boxes and surface-mounted industrial fluorescent light fixtures with a lighting level of 215 meter-candles.

The heating, ventilation, and air conditioning system in the storage cells exhausts air at a minimum rate of 4 air changes an hour. To minimize the accumulation of vapors, exhaust duct openings are located near the floor and 2.4 meters above the floor. This system meets the requirements of the *Uniform Building Code* (ICBO 1990) for hazardous occupancies. The heating, ventilation, and air conditioning unit for the storage areas is located approximately 12.2 meters from the heat pump used for the office and change rooms. The exhaust opening faces away from the heat pump to preclude the intake of exhaust vapors into the office and change rooms (Figure 2-3). Design drawings of the 616 NRDWSF heating, ventilation, and air conditioning systems are provided in Appendix 4B.

Activities that take place in the dangerous waste storage cells during normal operation are defined as follows.

- The containerized waste designated for storage in a particular cell is received and shipped in packagings of various sizes that are moved by hand, handtruck, or forklift.

- Waste containers are inspected as specified in Chapter 6.0.

Waste placement and segregation within the storage cells are performed according to a waste storage compatibility chart (Figure 2-4). As part of the designation process (Chapter 3.0, Section 3.2), the solid waste organization reviews the compatibility chart, assigns a primary storage location, and documents any unusual chemical characteristics and/or incompatibilities on the hazardous waste disposal analysis record (Chapter 3.0, Section 3.2). If the 'primary' storage location is full, the supervisor can choose a secondary storage location from the compatibility chart.

Deviations from the compatibility chart can be performed only after solid waste management has completed a review of the inventory to determine waste compatibility. The compatibility assessment must be documented, signed for review, and signed to indicate the supervisor's concurrence. The assessment either can be documented in the logbook or filed at the 616 NRDWSF and referenced in the logbook. Waste that cannot be managed safely at the 616 NRDWSF because of chemical compatibility characteristics is not accepted.

**2.1.2.1 Caustic and Oxidizer Storage Cells.** The caustic and oxidizer cells (Figure 2-2) are separated from the other cells by a 2-hour fire-rated concrete masonry unit firewall with 1 1/2-hour fire-rated personnel doors and rollup doors.

**2.1.2.2 Combustible and Acid Storage Cells.** The combustible and acid cells are located in the middle of the storage area (Figure 2-2). The combustible and acid cells provide the same features as those provided in the caustic and oxidizer storage cells. In addition, a safety shower and an eye wash station are located in the combustible cell.

**2.1.2.3 Flammable Liquid Storage Cells.** Because of its hazardous and sometimes explosive characteristic, Class 1-A and Class 1-B flammable liquid waste must be stored in specific cells (Figure 2-2). The 1-A cell can store 1-B liquid waste, but the 1-B cell cannot store the 1-A liquid waste. The 1-A and 1-B cells are separated from the other storage cells by a 4-hour fire-rated concrete masonry unit firewall, two back-to-back 1 1/2-hour fire-rated rollup doors, and a 3-hour fire-rated personnel door.

Water reactive waste packaged in U.S. Department of Transportation-specified containers is stored inside portable weatherproof flammable liquid storage cabinets located in the 1-A and 1-B cells.

Unlike the other storage cells, the 1-A flammable storage cell is enclosed totally and provides a number of additional features because of the nature of the stored waste. These features include the following:

- Double blast-resistant entry doors
- A controlled-relief exterior wall system on one side for explosion venting
- Explosion-relief vents on the roof
- Lighting and electrical fixtures as specified in National Fire Protection Association codes (NFPA 1989) for Class I-Division I hazardous atmospheres
- An area for transferring flammable liquid waste equipped with explosion-proof electrical pumps with receptacles and grounding cables.

If contents from leaking containers of 1-A and 1-B flammable liquid waste must be transferred, the 1-A flammable storage cell meets the explosion venting requirements of the National Fire Protection Association, Table 5-7.3 (NFPA 1989).

### 2.1.3 Packaging and Sampling Room

The packaging and sampling room (Figure 2-2) is constructed of 2-hour fire-rated concrete masonry unit interior walls and a precast double-tee exterior wall. Entry is provided by two 1 1/2-hour fire-rated doors. The floor is sealed concrete and the ceiling of precast-concrete double-tee construction is full building height. The floor is sloped to a 764.7-liter sump for the collection of released liquid. Collected liquid can be removed with absorbents or hand pumps. An approximately 5.0 to 10.0 centimeter curb surrounds the room at the base of each wall for additional containment. Actions to be taken in response to a spill or discharge are detailed in the Building Emergency Plan - 616 Building provided in Appendix 7A.

A countertop is provided in the packaging and sampling room with the following items:

- Two drainless stainless-steel basins
- Hot and cold running water (both basins)
- Independent hot water heater.

The basins, provided for dangerous waste use, allow waste to be retrieved for appropriate packaging and disposal. A safety shower and an eyewash station also are provided.

Although the primary purpose of the packaging and sampling room is for waste repackaging and sampling, the room can be used as an overflow storage area for compatible waste (excluding flammable 1-A and 1-B liquid waste), empty waste containers, and nonradioactive waste samples. The packaging and sampling room also is used to store waste sampling equipment, laboratory equipment, monitoring equipment, and various other equipment required for Hanford Facility waste management activities.

### 2.1.4 Packaging Material and Handling Equipment Area

The packaging material and handling equipment area, in the northeast end of the storage building (Figure 2-2), is used to store waste packaging materials and waste handling equipment. Its proximity to areas where dangerous waste is handled requires the following additional features:

- Sealed concrete floor that slopes to a 764.4-liter sump for the collection of liquid from spills or leaks that might inadvertently enter the area (actions to be taken in response to a spill or discharge are detailed in the Building Emergency Plan - 616 Building provided in Appendix 7A)

- Same fire protection system as previously described for the storage cells

- Emergency exit door.

Equipment and material stored in the packaging material and handling equipment area are as follows:

- Tools, drum dollies, forklift, and other waste handling equipment, as necessary
- Absorbents and other miscellaneous spill control equipment.

Additional containers and absorbents are stored in the portable storage unit located approximately 15.2 meters north of the 616 NRDWSF (Figure 2-2). A detailed list of equipment is included in the Building Emergency Plan - 616 Building provided in Appendix 7A.

### 2.1.5 Receiving Area

The receiving area, in the east end of the 616 NRDWSF (Figure 2-3), is a corridor used when transferring waste from the east loading area to the storage cells. Waste containers that are leaking or of questionable integrity sometimes are overpacked in this area. Compatible waste with incomplete paperwork also is staged in this area while discrepancies are resolved. Because of the types of activities that are performed in the receiving area, the area has the following additional features:

- Sealed concrete floor that slopes to a 953.9-liter trench for the collection of liquid from spills or leaks that might inadvertently enter the area (actions to be taken in response to a spill or discharge are detailed in the Building Emergency Plan - 616 Building provided in Appendix 7A)

- Same fire protection system as previously described for the storage cells

- One and a half-hour fire-rated rollup doors at each end of the corridor.

### 2.1.6 Loading and Unloading Areas

The 616 NRDWSF has two loading and unloading areas (Figure 2-2). The primary loading and unloading area is a 6.1- by 9.1-meter sealed concrete slab with a 4.0- by 6.1-meter approach ramp. The primary loading and unloading area, located at the east end of the 616 NRDWSF, is provided for incoming and outgoing dangerous waste transfers. The slab is sloped to a trench for liquid collection. The trench has a drain (with a locking removable plug) that connects to a french drain (Figure 2-5) for the release of accumulated water (e.g., rainwater, snowmelt). Design drawings of the french drain are provided in Appendix 4B. The slab and ramp are surrounded by a curb with the exception of the ramp entry, which is at the high point of the slope. The curb provides containment and channels liquid to the collection trench in this area. A mechanical scissor lift and associated safety equipment (guards, handrails, etc.) are mounted on the containment pad. Design drawings of the mechanical scissor lift are provided in Appendix 4B.

The secondary loading and unloading area (a 7.8- by 6.1-meter slab with a 4.0- by 6.1-meter approach ramp) is located outside the combustible cell on the north side of the 616 NRDWSF. The secondary loading and unloading area is of identical construction to the primary loading and unloading area. This secondary loading and unloading area is a redundant system and is not used under normal operating conditions.

The containment trenches are kept free of excess water when the 616 NRDWSF is in operation. In the event that a dangerous waste spill occurs on either of the loading areas, the released material will be recaptured to the greatest extent possible using pumps, absorbents, or alternate methods. Any additional liquids used to decontaminate the spill area will be

containerized and managed as specified in Chapter 3.0. Wipe samples will be performed to determine cleanup adequacy (Chapter 4.0, Section 4.1.1.8). Water (e.g., rainwater, snowmelt) accumulated in the trench before completion of the laboratory analysis or wipe samples also will be containerized. Accumulated water will be sampled and characterized if the initial wipe samples determine that the cleanup was inadequate. Actions to be taken in response to a spill or discharge are detailed in the Building Emergency Plan - 616 Building provided in Appendix 7A. Water accumulated in the 'clean' or 'spill free' loading and unloading area trenches will be drained to the french drain system (Section 2.5.1).

### 2.1.7 Other Environmental Permits

There are no other environmental permits being requested for the 616 NRDWSF at this time.

### 2.1.8 Construction Schedule [B-1(b)]

Any proposed new construction will be managed as described in the HF RCRA Permit.

## 2.2 TOPOGRAPHIC MAPS [B-2]

A topographic map, showing a distance of at least 1,000 feet (305 meters) around the 616 NRDWSF, is located in Appendix 2A (Drawing H-13-000014). This map is at a scale of 1 unit equals 2,000 units. The contour interval clearly shows the pattern of surface water flow in the vicinity of the 616 NRDWSF.

## 2.3 TRAFFIC INFORMATION [B-4]

General traffic information for the Hanford Facility is presented in the General Information Portion (DOE/RL-91-28).

The 616 NRDWSF is located approximately 61 meters north of Route 3 (Figure 2-1). The access road from Route 3 to the 616 NRDWSF has a graded gravel surface with an underlying aggregate base. This surface may be paved to control dust. Drawing H-13-000014 in Appendix 2A shows the 616 NRDWSF access road configuration.

## 2.4 RELEASE FROM SOLID WASTE MANAGEMENT UNITS [E]

Information concerning releases from SWMUs is discussed in the General Information Portion (DOE/RL-91-28, Appendix 2D).

This page intentionally left blank.

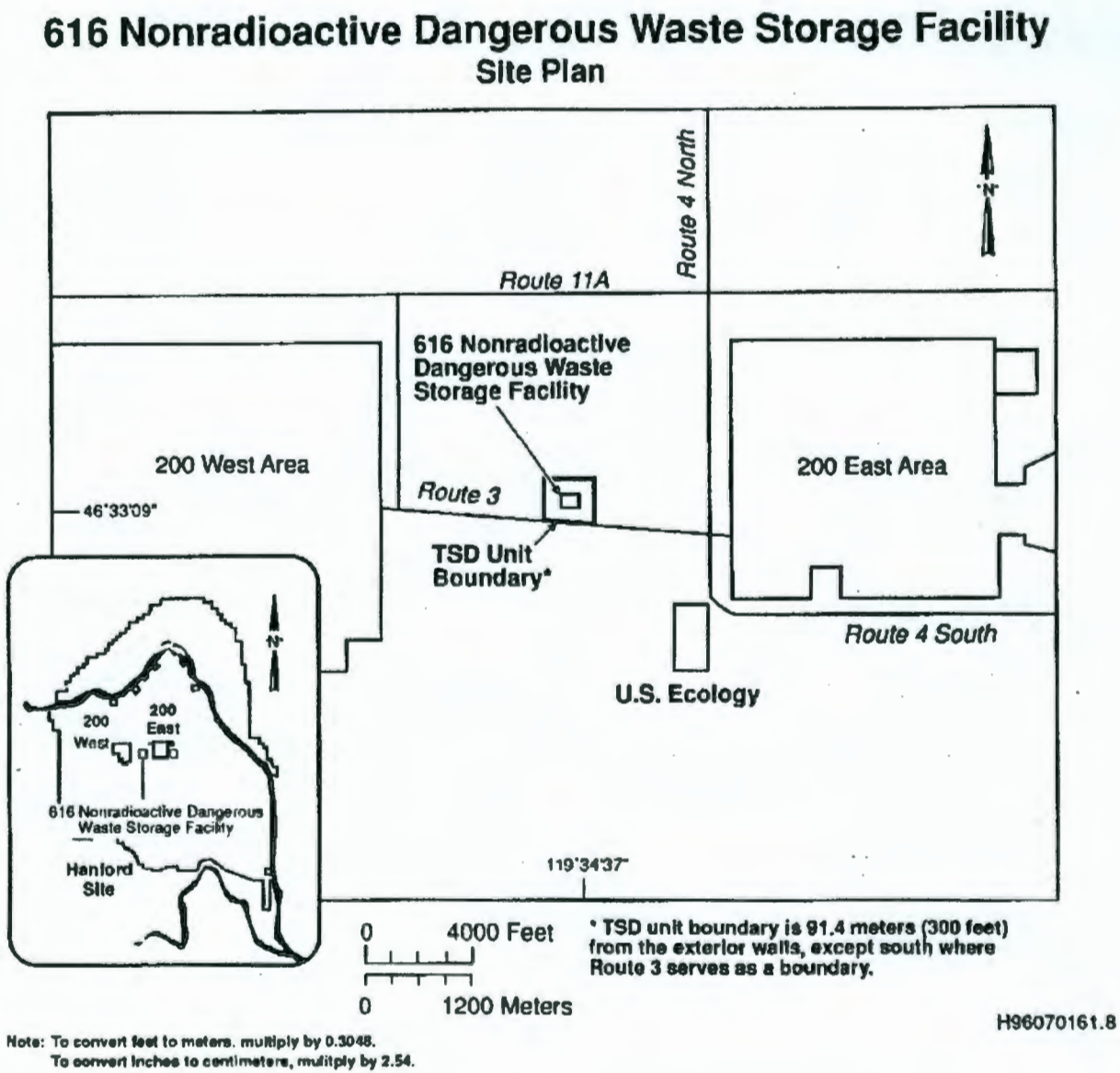


Figure 2-1. The 616 Nonradioactive Dangerous Waste Storage Facility Location.

# 616 Nonradioactive Dangerous Waste Storage Facility Floor Plan

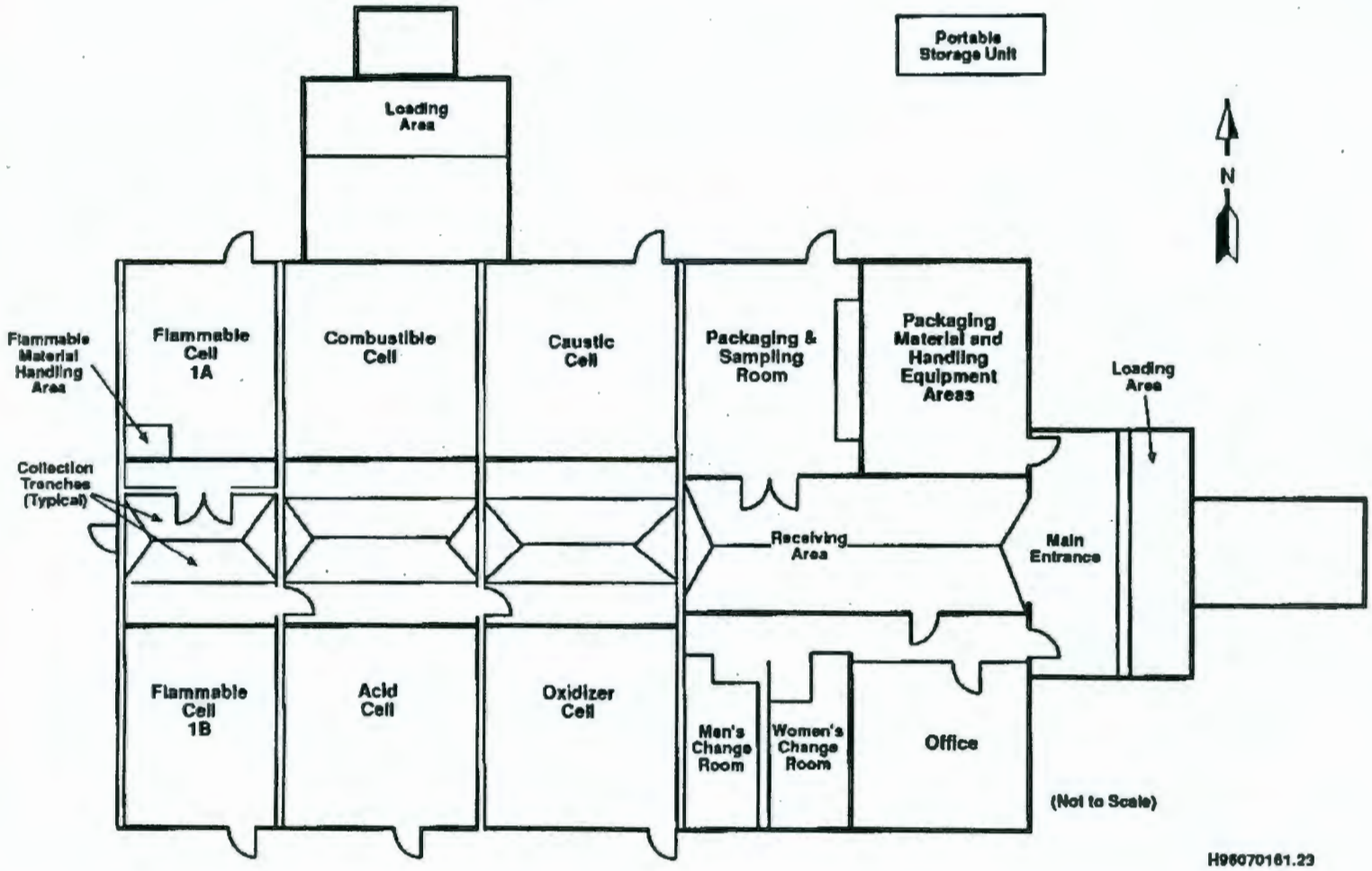


Figure 2-2. The 616 Nonradioactive Dangerous Waste Storage Facility Floor Plan.

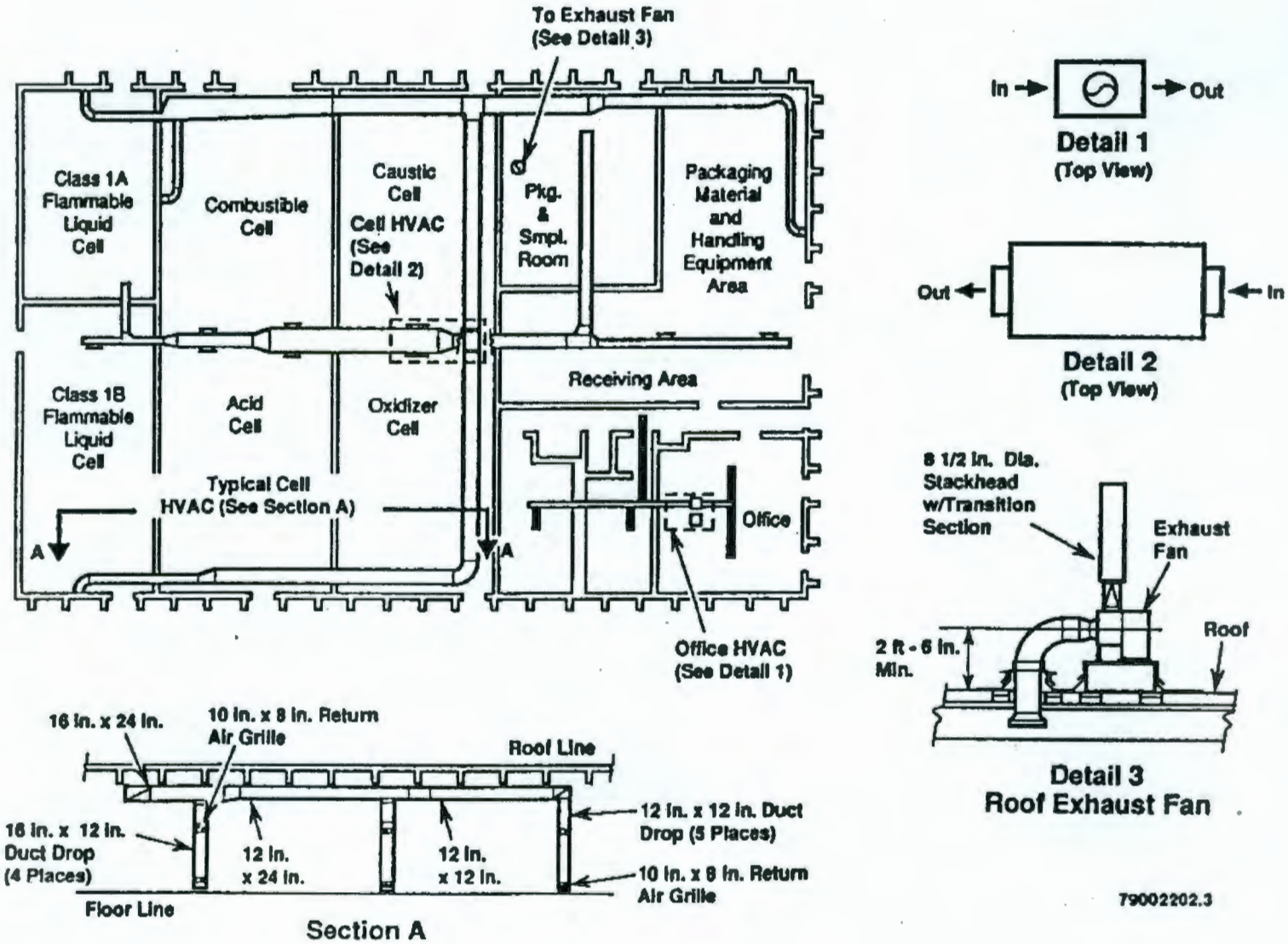


Note: To convert feet to meters, multiply by 0.3048.
To convert inches to centimeters, multiply by 2.54.

Figure 2-3. The 616 Nonradioactive Dangerous Waste Storage Facility Heating, Ventilation, and Air Conditioning Schematic.

**616 BUILDING STORAGE COMPATIBILITY CELLS**

| STORAGE AREA | PRIMARY STORAGE | SECONDARY STORAGE | PROHIBITED STORAGE |
|---|---|---|---|
| * FLAMMABLE<br>*Class 1A*<br>FP < 73°F (BP < 100°F) | Flammable Solids<br>Flammable Liquids - 1A<br>Flammable Gases<br>Spontaneously Combustible Materials | Non-RCRA Waste Solids<br>Non-RCRA Waste Liquids<br>Combustible Liquids<br>Flammable Liquids - 1B & 1C<br>Non-Flammable Gases<br>Flammable Gases<br>Irritating Materials<br>Class 9, Misc. Haz. Materials | Flammable Solids - DWW †<br>Poison Gases<br>Corrosive Materials (Acidic)<br>Corrosive Materials (Caustic) |
| * FLAMMABLE<br>*Classes 1B & 1C*<br>FP < 73°F (BP ≥ 100°F)<br>73°F ≤ FP < 100°F | Flammable Solids<br>Flammable Liquids - 1B & 1C<br>Non-Flammable Gases<br>Spontaneously Combustible Materials | Non-RCRA Waste Solids<br>Non-RCRA Waste Liquids<br>Combustible Liquids<br>Irritating Materials<br>Class 9, Misc. Haz. Materials | Flammable Solids - DWW †<br>Flammable Liquids - 1A<br>Poison Gases<br>Corrosive Materials (Acidic)<br>Corrosive Materials (Caustic) |
| FLAMMABLE<br>*Class 1A - Cabinet*<br>Dangerous When Wet | Flammable Solids - DWW † | Flammable Solids<br>Flammable Liquids - 1A<br>Flammable Liquids - 1B & 1C | Non-RCRA Waste Liquids<br>Poison Gases<br>Corrosive Materials (Acidic)<br>Corrosive Materials (Caustic) |
| FLAMMABLE<br>*Class 1B & 1C - Cabinet*<br>Dangerous When Wet | Flammable Solids - DWW † | Flammable Solids<br>Flammable Liquids - 1B & 1C | Non-RCRA Waste Liquids<br>Poison Gases<br>Corrosive Materials (Acidic)<br>Corrosive Materials (Caustic) |
| * COMBUSTIBLE<br>*Class II, Class IIIA & IIIB*<br>100°F ≤ FP < 140°F<br>140°F ≤ FP < 200°F<br>FP ≥ 200°F | Non-RCRA Waste Solids<br>Non-RCRA Waste Liquids<br>Combustible Liquids<br>Poison Gases<br>Poisonous Materials ‡<br>Irritating Materials<br>Class 9, Misc. Haz. Materials | Flammable Solids<br>Non-Flammable Gases | Flammable Solids - DWW †<br>Flammable Liquids<br>Flammable Gases<br>Corrosive Materials (Acidic)<br>Corrosive Materials (Caustic) |
| OXIDIZER<br>Promotes Combustion | Non-RCRA Waste Solids<br>Non-RCRA Waste Liquids<br>Oxidizers<br>Organic Peroxides<br>Irritating Materials<br>Class 9, Misc. Haz. Materials | Combustible Liquids<br>Non-Flammable Gases<br>Poisonous Materials ‡ | Flammable Solids - DWW †<br>Flammable Liquids<br>Flammable Gases<br>Poison Gases<br>Corrosive Materials (Acidic)<br>Corrosive Materials (Caustic) |
| ACIDIC<br>pH < 7 | Non-RCRA Waste Solids<br>Poisonous Materials ‡<br>Corrosive Materials (Acidic)<br>Irritating Materials<br>Class 9, Misc. Haz. Materials | Combustible Liquids<br>Non-RCRA Waste Liquids<br>Non-Flammable Gases | Flammable Solids - DWW †<br>Flammable Solids<br>Flammable Liquids<br>Flammable Gases<br>Poison Gases<br>Oxidizers<br>Organic Peroxides<br>Corrosive Materials (Caustic) |
| CAUSTIC<br>pH > 7 | Non-RCRA Waste Solids<br>Corrosive Materials (Caustic) | Combustible Liquids<br>Non-RCRA Waste Liquids<br>Non-Flammable Gases<br>Poisonous Materials ‡ | Flammable Solids - DWW †<br>Flammable Solids<br>Flammable Liquids<br>Flammable Gases<br>Poison Gases<br>Oxidizers<br>Organic Peroxides<br>Corrosive Materials (Acidic) |
| Packaging & Sampling Room | | Non-RCRA Waste Solids<br>Non-RCRA Waste Liquids<br>Combustible Liquids<br>Irritating Materials<br>Class 9, Misc. Haz. Materials | Flammable Solids - DWW †<br>Flammable Liquids<br>Flammable Gases<br>Corrosive Materials (Acidic)<br>Corrosive Materials (Caustic) |

* *Use of the terms "FLAMMABLE" and "COMBUSTIBLE" in this table are as defined in the 1993 Edition of NFPA 30, not 49 CFR.*
† *Class 4.3, Dangerous When Wet Material*
‡ *Poisonous Liquids, Packing Group I, Zone A, may be stored in the COMBUSTIBLE cell only.*

Figure 2-4. Waste Storage Compatibility by Hazard Class.

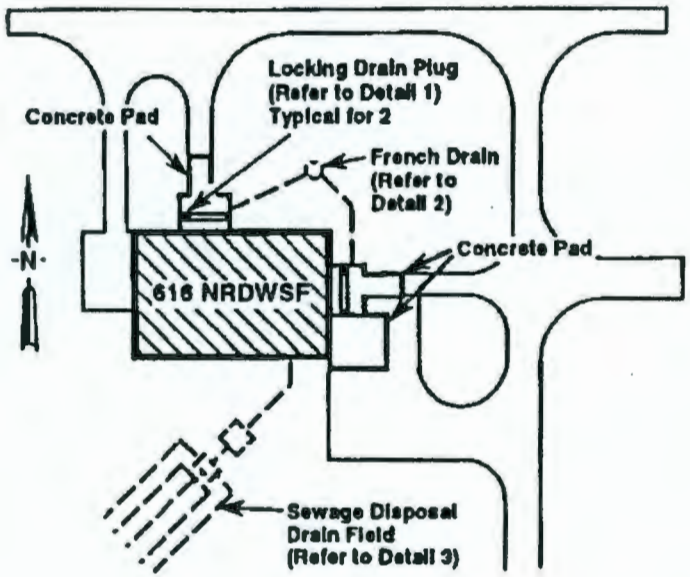


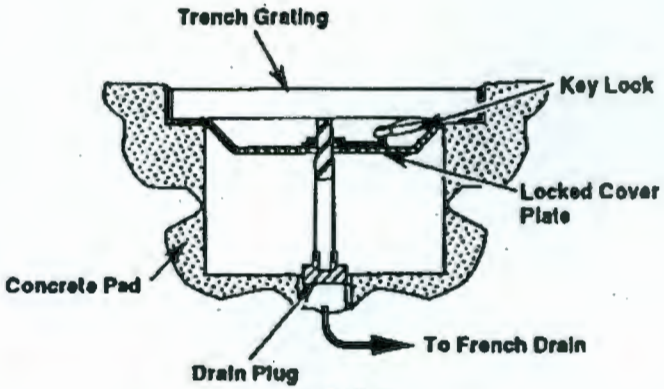


**Detail 1**
**Locking Drain Plug**

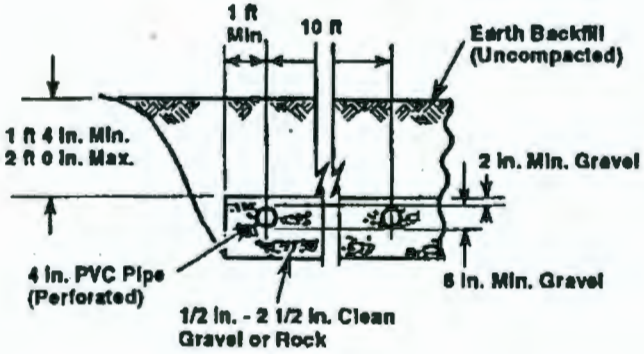


**Detail 3**
**Sewage Disposal Drain Field**

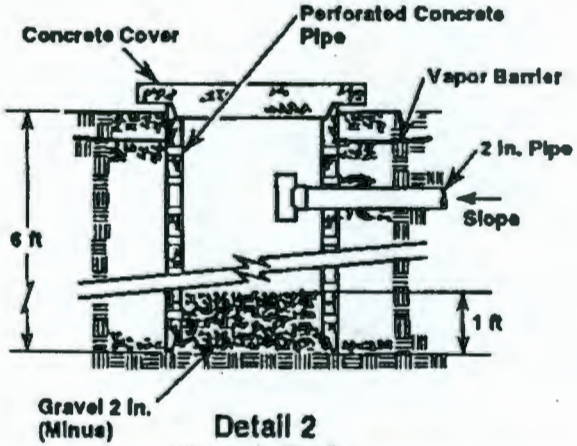


**Detail 2**
**French Drain**

NRDWSF = Nonradioactive Dangerous Waste Storage Facility
PVC = Polyvinyl Chloride
Min. = Minimum
Max. = Maximum

Note: To convert feet to meters, multiply by 0.3048.
To convert inches to centimeters, multiply by 2.54.

39312012.7

Figure 2-5. Diagram of French Drain.

## CONTENTS

3.0 WASTE ANALYSIS [C] . . . . . 3-1

3.1 CHEMICAL, BIOLOGICAL, AND PHYSICAL ANALYSIS [C-1] . . . . . 3-1

3.2 WASTE ANALYSIS PLAN [C-2] . . . . . 3-2

3.3 TRACKING SYSTEM [C-4] . . . . . 3-2

## APPENDIX

3A WASTE ANALYSIS PLAN FOR 616 NONRADIOACTIVE DANGEROUS WASTE STORAGE FACILITY . . . . . APP 3A-i

## FIGURE

3-1. Decision Process for Handling Dangerous Waste . . . . . F3-1

## TABLES

3-1. Common Containers Stored at the 616 Nonradioactive Dangerous Waste Storage Facility . . . . . T3-1

3-2. Waste Codes of Materials Stored at the 616 Nonradioactive Dangerous Waste Storage Facility . . . . . T3-2

This page intentionally left blank.

# 3.0 WASTE ANALYSIS [C]

This chapter provides information on the physical, chemical, and biological characteristics of the waste stored at the 616 NRDWSF. A waste analysis plan is included that describes the methodology used for determining waste types.

## 3.1 CHEMICAL, BIOLOGICAL, AND PHYSICAL ANALYSIS [C-1]

The 616 NRDWSF stores nonradioactive dangerous waste that is received from generating units located on the contiguous Hanford Facility and from DOE-RL owned and operated generators located on noncontiguous areas near the Hanford Facility (e.g., Federal Building and the 712 Building in downtown Richland and the 3000 Area). This waste is stored in the 616 NRDWSF until it is transported to an offsite TSD facility. Waste normally is received in U.S. Department of Transportation 18.9-, 113.6-, and 208-liter containers, but also can be received in other U.S. Department of Transportation-approved containers such as wooden or fiberboard boxes (Table 3-1). No waste is accepted at the 616 NRDWSF in bulk loads (e.g., tank trucks, dump trucks, etc.).

The 616 NRDWSF receives nonradioactive dangerous waste from DOE-RL owned and operated processing, testing, maintenance, and construction activities. The DOE-RL and Hanford Site contractors have implemented control procedures to ensure that proper waste identification, packaging, and Ecology designation are attained (Appendix 3A). Figure 3-1 illustrates the process for handling containerized nonradioactive dangerous waste. Chemical, biological, and physical analyses of the dangerous waste to be handled at 616 NRDWSF pursuant to WAC 173-303-806(4)(a), entitled "616 Nonradioactive Dangerous Waste Facility Off-Site Shipping Lists," are found in Attachment 9 of the Hanford Facility RCRA Permit (Ecology 1994).

Most of the nonradioactive dangerous waste received at the 616 NRDWSF consists of old (outdated) pure chemical products, spent dangerous waste sources, product mixtures in small laboratory quantities, and empty dangerous waste drums (WAC 173-303-160). Some waste regulated under the *Toxic Substances Control Act of 1976* (polychlorinated biphenyl) is received and stored at the 616 NRDWSF in accordance with applicable regulations. Any waste listed in WAC 173-303-9903, or any dangerous waste mixture (WAC 173-303-084), or characteristic waste (WAC 173-303-090), could be generated on the Hanford Site. Waste normally can be characterized into 'U', 'P', 'F', 'D', 'WP', or 'WT' Ecology waste code designations by the use of manufacturers' product information, material safety data sheets, laboratory analysis, and such references as 40 CFR 302.4, *Dangerous Properties of Industrial Materials* (Sax 1984), *Registry of Toxic Effects of Chemical Substances* (NIOSH 1986), and *The Condensed Chemical Dictionary* (Sax and Lewis 1987). Waste also is characterized in accordance with the requirements of 40 CFR 261 and 40 CFR 761.

It is the responsibility of the generating units to completely and correctly identify the dangerous constituents of their waste. Based on waste identification information provided by the generating unit's waste coordinator, the solid waste management staff designates the waste in accordance with WAC 173-303-070. The solid waste management staff maintains auditable copies of the following for each waste stored at the 616 NRDWSF, as applicable:

- All records providing a description of the waste
- Documentation identifying the dangerous characteristics of the waste
- The basis for waste designation
- Laboratory reports with chemical, biological, and physical analysis of samples
- Waste tracking forms/or Uniform Hazardous Waste Manifest.
- For wastes shipped to offsite TSD facilities, land disposal restriction documentation (Chapter 12.0, Section 12.4.2.2.7).

The generating unit and the 616 NRDWSF operating organization maintain copies of the waste tracking forms/or Uniform Hazardous Waste Manifest and associated documents [i.e., hazardous waste disposal analysis record (Appendix 3A)] identifying the waste characteristics and assigned waste designations.

In general, each package is unique and new containers continuously are being accepted for storage. In 1990, the 616 NRDWSF received 1,932 containers in 94 shipments, an average shipment being 20 containers every 4 to 5 days. The 616 NRDWSF accepts waste for storage with the waste codes identified in Table 3-2, excluding explosive, shock-sensitive (Section 4.1.4.1), class IV oxidizer (in waste volumes greater than 4.5 kilograms) and radioactive waste. The 616 NRDWSF also can store containerized *Toxic Substances Control Act* regulated waste.

Nonradioactive dangerous waste is shipped to an appropriate permitted TSD facility. The waste is designated according to Ecology regulations for waste designation outlined in WAC 173-303-070.

## 3.2 WASTE ANALYSIS PLAN [C-2]

The waste analysis plan is provided in Appendix 3A.

## 3.3 TRACKING SYSTEM [C-4]

Specific waste tracking forms for the transfer of waste to the 616 NRDWSF are used. The waste tracking forms and other supporting documentation will be

maintained on the Hanford Facility for a minimum of 5 years following closure of the 616 NRDWSF.

The Hanford Facility uses an EPA Uniform Hazardous Waste Manifest for all offsite shipments of dangerous waste. Onsite waste tracking forms are used for transporting waste on the Hanford Facility.

The following provides requirements for receiving shipments, response to manifesting discrepancies, and provisions for nonacceptance of shipments.

Before transfer of nonradioactive dangerous waste to the 616 NRDWSF, the following occurs (Appendix 3A).

- The generating unit secures the waste in a controlled, less-than-90-day-storage area, satellite accumulation area, CERCLA cleanup site, or expedited response action site.

- If the contents of the container cannot be verified, the waste coordinator for the generating unit (Section 3.2) identifies the waste from associated manufacturer's data, waste records, or sample analysis.

- The waste coordinator for the generating unit submits a waste storage/disposal request (Section 3.2) to solid waste management.

- A trained designator in solid waste management identifies the proper waste designation.

- The completed waste designation is reviewed and signed by a peer designator and a solid waste management manager.

- Solid waste management sends a hazardous waste disposal analysis record (Section 3.2) to the generating unit's waste coordinator and to 616 NRDWSF operating personnel.

- The generating unit's waste coordinator ensures that the dangerous waste is packaged, marked, and labeled in accordance with the hazardous waste disposal analysis record.

- The generating unit's waste coordinator prepares an onsite waste tracking form or Uniform Hazardous Waste Manifest. The onsite waste tracking form or Uniform Hazardous Waste Manifest identifies the applicable contractor as the transporter and the 616 NRDWSF as the receiving storage unit.

- Transportation personnel inspect the containers for compliance with U.S. Department of Transportation regulations and compliance with the hazardous waste disposal analysis record.

- A transporter transports the dangerous waste from the generating unit to the 616 NRDWSF.

Before a transfer is accepted at the 616 NRDWSF, each container is reviewed against the onsite waste tracking form or the Uniform Hazardous Waste Manifest, and the hazardous waste disposal analysis record. During the review, the following items are checked:

- Proper shipping name
- Proper hazard class
- Proper marking and labeling
- Valid radiation release sticker in place (except for exempted facilities)
- Proper packaging (e.g., correct container specification)
- Container condition.
- Evidence tape from field verified waste is untampered.

If the container passes these checks, the container is placed in the appropriate storage cell (Chapter 4.0, Section 4.1.1.2 and Chapter 6.0, Section 6.4.1). The acceptance procedure also ensures the following occurs.

- Significant discrepancies are noted on all copies of the waste tracking form or Uniform Hazardous Waste Manifest.
- The transporter is given one signed copy of the waste tracking form or Uniform Hazardous Waste Manifest.
- A copy of the waste tracking form or Uniform Hazardous Waste Manifest is sent to the generating unit within 30 days of receipt.
- A copy of the waste tracking form or Uniform Hazardous Waste Manifest is retained for at least 5 years by the 616 NRDWSF and solid waste management organization.

All dangerous waste stored at the 616 NRDWSF is shipped offsite for treatment, storage, and/or disposal. Before shipment offsite, all waste is manifested to comply with U.S. Department of Transportation, EPA, WAC 173-303, and other applicable regulations.

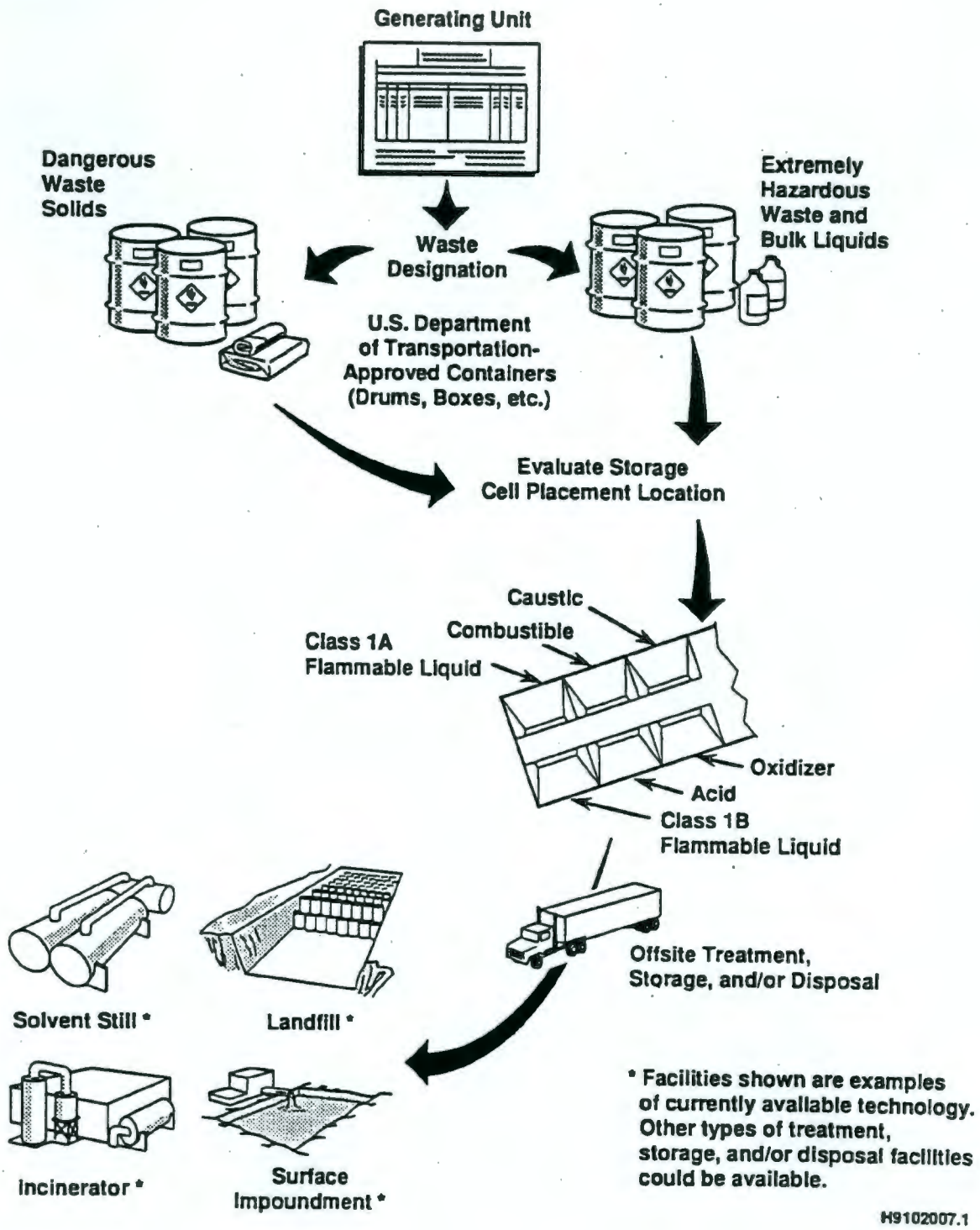


Figure 3-1. Decision Process for Handling Dangerous Waste.

Table 3-1. Common Containers Stored at the 616 Nonradioactive Dangerous Waste Storage Facility.

| DOT[a] Spec. | Container | Material | Ref.[b] (49 CFR 178) |
|---|---|---|---|
| 12P/12U (UN6HG2) | CF[c] w/inner poly liner | Fiberboard/polyethylene | 178.522 |
| 12B (UN4G1) | CF | Fiberboard | 178.516 |
| 17C (UN1A1) | DM[d] | Low carbon steel | 178.504 |
| 17E (UN1A1) | DM | Low carbon steel | 178.504 |
| 17H (UN1A2) | DM | Low carbon steel | 178.504 |
| 34 (UN1A1) | DF[e] | Polyethylene | 178.509 |
| 37A (UN1A1) | DM | Low carbon steel | 178.504 |
| 37B (UN1A1) | DM | Low carbon steel | 178.504 |

[a]U.S. Department of Transportation specifications.
[b]Reference section of regulations.
[c]CF = fiberboard box.
[d]DM = drum, metal.
[e]DF = drum, fiberboard.

Table 3-2. Waste Codes of Materials Stored at the 616 Nonradioactive Dangerous Waste Storage Facility.

| Waste codes | Reference |
|---|---|
| U and P numbers | WAC-173-303-9903 |
| F numbers | WAC-173-303-9904 |
| W001 | WAC-173-303-9904 |
| D001 | WAC-173-303-090(5) |
| D002 | WAC-173-303-090(6) |
| D003 | WAC-173-303-090(7) |
| D004 through D043 | WAC-173-303-090(8) |
| WT01 and WT02 | WAC-173-303-101/104 |
| WP01, WP02 and WP03 | WAC-173-303-102/104 |
| WSC2 | WAC-173-303-090(6) |

## CONTENTS

4.0 PROCESS INFORMATION [D] . . . . . 4-1

4.1 CONTAINERS [D-1] . . . . . 4-1
4.1.1 Containers with Free Liquids . . . . . 4-1
4.1.1.1 Description of Containers [D-1a] . . . . . 4-1
4.1.1.2 Container Management Practices [D-1b and c] . . 4-1
4.1.1.3 Secondary Containment System Design and Operation [D-1d through D-1d(1)(a)] . . . . . 4-3
4.1.1.4 Requirement for Base or Liner to Contain Liquids [D-1d(1)(b)] . . . . . 4-3
4.1.1.5 Containment System Drainage [D-1d(1)(b)] . . . 4-4
4.1.1.6 Containment System Capacity [D-1d(1)(c)] . . . 4-4
4.1.1.7 Control of Run-On/Run-Off [D-1d(1)(d)] . . . . 4-4
4.1.2 Removal of Liquids from Containment System [D-1d(2)] . . . . . 4-4

4.2 CONTAINERS WITHOUT FREE LIQUIDS THAT DO NOT EXHIBIT IGNITABILITY OR REACTIVITY [D-1e] . . . . . 4-6
4.2.1 Test for Free Liquids . . . . . 4-7
4.2.2 Description of Containers . . . . . 4-7
4.2.3 Container Management Practices . . . . . 4-7
4.2.4 Container Storage Area Drainage . . . . . 4-7

4.3 PREVENTION OF REACTION OF IGNITABLE, REACTIVE, AND INCOMPATIBLE WASTES IN CONTAINERS [D-1f] . . . . . 4-7
4.3.1 Management of Reactive Waste in Containers [D-1f(1)] . . 4-7
4.3.2 Management of Ignitable and Reactive Waste in Containers [D-1f(2)] . . . . . 4-7
4.3.3 Management of Incompatible Wastes in Containers [D-1f(3)] . . . . . 4-7

## APPENDICES

4A CONSTRUCTION SPECIFICATION . . . . . APP 4A-i

4B DESIGN DRAWINGS . . . . . APP 4B-i

4C CONTAINMENT CALCULATIONS . . . . . APP 4C-i

4D CONCRETE SEALANT PROPERTIES AND PERFORMANCE DATA. . . . . APP 4D-i

## FIGURE

4-1. Design of the Secondary Containment System . . . . . F4-1

## TABLES

4-1. Common Containers Stored at the 616 Nonradioactive Dangerous Waste Storage Facility . . . . . T4-1
4-2. Container Management Per Storage Cell . . . . . T4-2
4-3. Storage Cell Stacking Restrictions . . . . . T4-3
4-4. Storage Cell Volume . . . . . T4-4

# 4.0 PROCESS INFORMATION [D]

This chapter discusses the processes used to store containers at the 616 NRDWSF.

## 4.1 CONTAINERS [D-1]

The following sections describe the type of containers stored at the 616 NRDWSF. The construction specification for this storage unit is provided in Appendix 4A.

### 4.1.1 Containers with Free Liquids

Containers with free liquid are discussed in the following sections.

**4.1.1.1 Description of Containers [D-1a].** The 616 NRDWSF only accepts waste properly packaged in U.S. Department of Transportation-approved containers. These containers are chosen in accordance with pertinent regulations and are approved for that waste. Table 4-1 lists the most common types of containers [and applicable U.S. Department of Transportation specifications (49 CFR 178)] stored at the 616 NRDWSF.

All containers stored at the 616 NRDWSF are in an acceptable condition for each waste type (Appendix 3A). Because no containers are reconditioned on the Hanford Facility, there are no reconditioned containers at the 616 NRDWSF.

All waste containers received at the 616 NRDWSF are marked and labeled in accordance with the requirements specified under U.S. Department of Transportation regulations (49 CFR 172). Marking and labeling requirements are specified on the hazardous waste disposal analysis record (Appendix 3A). In addition to the U.S. Department of Transportation marking and labeling requirements, all waste containers are marked as follows:

- 'PERSISTENT' - If a WP01, WP02, or WP03 waste code is applicable
- 'TOXIC' - If a WT01 or WT02 waste code is applicable.

**4.1.1.2 Container Management Practices [D-1b and c].** The 616 NRDWSF is designed with two different types of cells: regular storage and flammable liquid storage (Chapter 2.0, Figure 2-2). The details for each cell are provided in Table 4-2.

Before being accepted at the 616 NRDWSF for storage, each container is inspected for the following:

- Container condition
- Container seal
- Proper marking and labeling
- Valid radiological release, if applicable.

On being accepted for storage at the 616 NRDWSF, containers are unloaded in accordance with the requirements of Chapter 6.0, Section 6.4.1, and moved to the proper storage cell as described on the hazardous waste disposal analysis record (Appendix 3A). The containers are moved on drum dollies, by a pallet jack, or by a forklift if pallatized (the forklift is prohibited from operating in the Class 1-A flammable liquid cell). The containers are placed in the assigned storage cell, with the containers being placed in one of the storage locations painted on the cell floor (Chapter 6.0, Figure 6-2 provides storage locations). The location of the container is logged on a locator chart and input into the 616 NRDWSF waste tracking system. This system identifies the location of each container stored in the 616 NRDWSF. Waste packages can be stacked in any storage cell. Table 4-3 identifies the stacking restrictions for each cell.

The containers can be stacked either by hand or machine (e.g., forklift). Containers stacked by hand are placed next to the containers on which the containers are to be stacked. The container is lifted and placed onto the base container, taking care not to damage either container. The 616 NRDWSF supervisor is responsible for ensuring that all lifts are done in accordance with applicable safety requirements. No personnel are allowed to lift a waste container in a manner that jeopardizes them or other personnel.

The lifting of containers having a gross weight that exceeds the weight limit identified for an individual can be stacked by two employees or by mechanical means. Containers having a gross weight exceeding 59.1 kilograms must be stacked by mechanical means. Mechanically stacked containers must be placed on a pallet or similar dunnage to properly distribute the load to base containers.

Containers are closed during normal operations and are not handled or stored in a manner that might damage the packaging. The containers are inspected daily (when the storage unit is occupied) for degradation and leakage. Activities restricted to the office area do not require a daily inspection of the storage area, provided the ventilation system is fully operational. A weekly inspection of the 616 NRDWSF and its waste inventory, if present, (Chapter 6.0, Section 6.2.1.2) is performed.

In preparation for shipment of waste from the 616 NRDWSF to an offsite TSD facility, containers are identified for shipment from the 616 NRDWSF inventory tracking system. A completed offsite manifest and a list of waste proposed for shipment are transmitted to transportation personnel and a contracted offsite TSD facility for review. Review comments are dispositioned to the satisfaction of all parties. The 616 NRDWSF personnel mark the containers with the offsite manifest number. Solid waste management prepares a letter that accompanies the waste shipment addressing the land disposal restriction; documentation requirements are identified in Chapter 12.0.

Before shipment, each container is inspected and reviewed by transportation representatives for proper designation, packaging, marking, and labeling. An independent review of the shipping documentation (i.e., offsite manifest, product information sheets) is performed. Solid waste management and the 616 NRDWSF supervisor review each package before the package is loaded on the truck for offsite shipment.

**4.1.1.3 Secondary Containment System Design and Operation [D-1d through D-1d(1)(a)].** The design of the secondary containment system is shown in Figure 4-1 and in Appendix 4B. Secondary containment consists of three main components. First, each cell consists of a sealed concrete pad, which is sloped to containment trenches. Second, there are three containment trenches between adjacent cells, one for each cell and one in the walkway between the cells. Third, each cell is surrounded by a curb for additional containment. This curb varies from approximately 5.0 to 10.0 centimeters in height as the level of the cell floor varies.

**4.1.1.4 Requirement for Base or Liner to Contain Liquids [D-1d(1)(b)].** The floor and trenches in the storage and container handling areas are constructed of reinforced concrete. Concrete was selected as a construction material because concrete is essentially inert and inhibits downward permeation of liquid caustic, oxidizing, combustible, and flammable materials. Additionally, the concrete floor surface has been sealed with a polyamide epoxy resin that, when cured, has properties similar to glass. The polyamide epoxy resin base finish coatings were selected because of the capability of the coatings to resist abrasion, extreme environmental conditions, and a wide variety of chemical exposures (Appendix 4D).

The design of the floor in the storage and container handling areas consists of concrete slabs (seamless) sloped to dedicated collection trenches (Figure 4-1 and Appendix 4B). All interior trenches are self-contained (without drains). Each storage cell is surrounded by a curb varying in height from approximately 5.0 to 10.0 centimeters, which would provide additional containment in the event of a large spill.

If a crack that compromises the integrity of the concrete containment system of a storage cell is found, the crack is prepared, grouted, and sealed in accordance with the construction specification (Appendix 4A) and the repair material manufacturer's instructions. Significant cracks in the floor surface of the containment cells are repaired within 14 days of detection. Significant cracks in the storage cell containment trenches are repaired within 5 working days of detection. If crack repairs cannot be completed within the specified time periods, liquid waste storage in the affected areas is suspended until repairs are completed.

After repair completion, the environmental compliance officer or designee inspects the repair to ensure acceptability and indicates acceptance of the repair in the 616 NRDWSF logbook. The logbook is maintained for the life of the 616 NRDWSF.

**4.1.1.5 Containment System Drainage [D-1d(1)(b)].** Each storage cell consists of a concrete slab sloped to a self-contained containment trench (Section 4.1.1.4).

**4.1.1.6 Containment System Capacity [D-1d(1)(c)].** Each storage cell is designed to contain over 10 percent of the total volume of containers that can be stored there. Each cell is designed with a sloping floor that drains to a containment trench (Figure 4-1 and Appendix 4B). Table 4-4 lists the total containment volume and maximum container storage volume per cell. Calculations performed to verify containment capacity are detailed in Appendix 4C.

**4.1.1.7 Control of Run-On/Run-Off [D-1d(1)(d)].** The only major run-on or run-off foreseen would be a flood, fire sprinkler activation, or a break in the water main. No floods are predicted to impact the 616 NRDWSF (DOE/RL-91-28, Chapter 2.0).

In the event of a run-on or run-off from any source (e.g., fire sprinkler activation, pipe break, etc.), containment systems in the 616 NRDWSF are capable of holding between 2,445 liters and 3,510 liters of liquid for each cell as cell width varies. Collected or contained liquid can be removed by hand pumps for large quantities and by absorbents for smaller quantities. All waste stored in the 616 NRDWSF is in sealed containers, which limits the detrimental impact of a run-on or run-off situation.

In the event that contaminated water is released from the 616 NRDWSF because of flooding of the containment system by fire sprinkler activation or a pipe break (Section 4.1.2), the incident will be treated as a spill.

Actions to be taken in response to a spill or discharge are detailed in the Building Emergency Plan - 616 Building provided in Appendix 7A.

### 4.1.2 Removal of Liquids from Containment System [D-1d(2)]

In the event of a spill or release at the 616 NRDWSF that results in collection of liquid waste material in the containment system, the following will be performed after determination by the Building Emergency Director (BED) that implementation of the Contingency Plan pursuant to Appendix 7A is not necessary or all necessary actions in accordance with the Contingency Plan have been implemented. Either case must be recorded and signed in the TSD unit-specific operating record by the BED.

- Containers in the cell(s) affected by the spill will be inspected for signs of leakage. Leaking containers will be repackaged and identified in the 616 NRDWSF operating and spill logbooks.

- Inspection reports and the 616 NRDWSF operating and spill logbooks will be reviewed to identify any waste releases in the waste storage areas for which remedial actions have not been completed.

- The waste will be removed from the containment system. The equipment used for removal of large quantities of liquid normally would be a hand-held pump or vacuum system. Adsorbents will be used for removal of small amounts of liquid. The waste material will be placed in the appropriate U.S. Department of Transportation-specified container.

- The containerized waste will be handled as follows.

  - If the waste has been altered during stabilization and cleanup actions (absorbed, mixed, diluted, etc.), the containerized waste will be placed in storage and managed in accordance with the provisions of the waste analysis plan (Appendix 3A).

  - A waste storage/disposal request (Appendix 3A) will be submitted to solid waste management for waste designation. In response, a waste disposal analysis record describing the regulatory status and proper packaging, labeling, and marking requirements for the waste (Appendix 3A) will be issued. The 616 NRDWSF staff will ensure that waste is properly packaged, labeled, marked, and stored.

  - The 616 NRDWSF inventory will be altered to reflect the changes in waste description, volume, and storage locations.

  - If the waste was not altered during stabilization and cleanup activities, the containerized waste will be placed in the appropriate storage area and the 616 NRDWSF inventory altered to reflect any changes.

- Wipe samples will be taken of the spill area in accordance with an approved procedure (EPA 1987) using Whatman[1] No. 42 filter paper or an equivalent. The filter paper used to collect the sample will be moistened with an appropriate collection medium based on the characteristics of the spilled material. All samples taken to verify that the site of a release is clean will be obtained in accordance with the applicable standards of Chapter 11.0, Section 11.1.4. et seq. In the event that water would not be an appropriate collection medium to dissolve the contamination of concern, the solvent used by the laboratory for analysis will be used. The filter paper will be sent to a laboratory where the filter paper will be prepared and analyzed in accordance with the test methods identified in Appendix 3A, for constituents known to have been involved in the spill to verify cleanup adequacy.

  An alternative sampling mechanism will be used for detection of waste matrices for which wipe sampling protocols are ineffective. Volatile organics will be detected using organic vapor air samplers. To detect the presence of corrosive liquids, pH paper and pH monitors will be used. The type of sampling technique used to determine the

---

[1]Whatman is a trademark of Whatman Incorporated.

cleanliness of the contaminant will be documented in the spill logbook.

- When sampling techniques have verified cleanup, the 616 NRDWSF supervisor will sign the spill logbook indicating that the waste was removed from the containment system and cleanup activities were completed. A solid waste management representative will sign the spill logbook indicating approval of actions taken.

Specific actions to be taken in response to a spill or discharge are detailed in the Building Emergency Plan - 616 Building provided in Appendix 7A.

In the event of a fire sprinkler activation or a pipe break within the 616 NRDWSF that results in collection of water in the containment system, the following will be performed.

- Water in the containment system visually will be inspected for signs of contamination.

- Containers in the cell(s) affected by a sprinkler activation or a pipe break will be inspected for signs of leakage.

- Inspection reports and the 616 NRDWSF operating and spill logbooks will be reviewed to identify any waste releases in the waste storage areas for which remedial actions were not completed.

- The 616 NRDWSF supervisor will sign the 616 NRDWSF logbook indicating that the above steps were completed and that the storage building is clean. Solid waste management will review the supervisors actions and give concurrence.

- The water will be removed from the containment system. Water that cannot be verified to be free of contamination will be containerized and stored in an area equipped with secondary containment. The containerized water will be handled in accordance with the provisions of the waste analysis plan (Appendix 3A).

- The 616 NRDWSF supervisor will sign the logbook indicating that the water was removed from the containment system.

Actions to be taken in response to a spill or discharge are detailed in the Building Emergency Plan - 616 Building provided in Appendix 7A.

## 4.2 CONTAINERS WITHOUT FREE LIQUIDS THAT DO NOT EXHIBIT IGNITABILITY OR REACTIVITY [D-1e]

Containers without free liquids are discussed in the following sections.

### 4.2.1 Test for Free Liquids

The 616 NRDWSF stores containers with free liquid and without free liquid. Therefore, a test for free liquid is not required.

### 4.2.2 Description of Containers

Refer to Section 4.1.1.1, Description of Containers.

### 4.2.3 Container Management Practices

Refer to Section 4.1.1.2, Container Management Practices.

### 4.2.4 Container Storage Area Drainage

Each storage cell consists of a concrete slab sloped to a self-contained containment trench (Section 4.1.1.4 and Chapter 2.0, Section 2.1).

## 4.3 PREVENTION OF REACTION OF IGNITABLE, REACTIVE, AND INCOMPATIBLE WASTES IN CONTAINERS [D-1f]

The following sections provide information on the management of ignitable, reactive, and incompatible waste in containers. Additional information can be found in Chapter 6.0, Section 6.5.

### 4.3.1 Management of Reactive Waste in Containers [D-1f(1)]

The 616 NRDWSF does not store waste exhibiting the characteristic (reactivity) specified in WAC 173-303-090(7)(a)(vi), (vii), or (viii).

### 4.3.2 Management of Ignitable and Reactive Waste in Containers [D-1f(2)]

The nearest structure or TSD unit boundaries are in excess of 61 meters from any of the ignitable waste sites as shown on Drawing H-13-000014 in Appendix 2A. Sixty-one meters is in excess of the limits imposed by the National Fire Protection Association (NFPA 1989).

### 4.3.3 Management of Incompatible Wastes in Containers [D-1f(3)]

The generating unit's waste coordinator and the solid waste management staff are responsible for determining the regulatory status of each waste and determining the incompatible compounds of the waste. Status information is forwarded on a hazardous waste disposal analysis record (Appendix 3A) to the generating unit, who packages the waste as instructed. Afterwards, solid waste management personnel inspect the container for proper packaging,

labeling, marking, and onsite waste tracking forms before transport to the 616 NRDWSF. The container is inspected again at the 616 NRDWSF to determine that the waste is properly packaged, marked, labeled, and manifested (Appendix 3A).

Each storage cell in the 616 NRDWSF contains one compatibility group and is segregated either by three self-contained trenches or concrete walls.

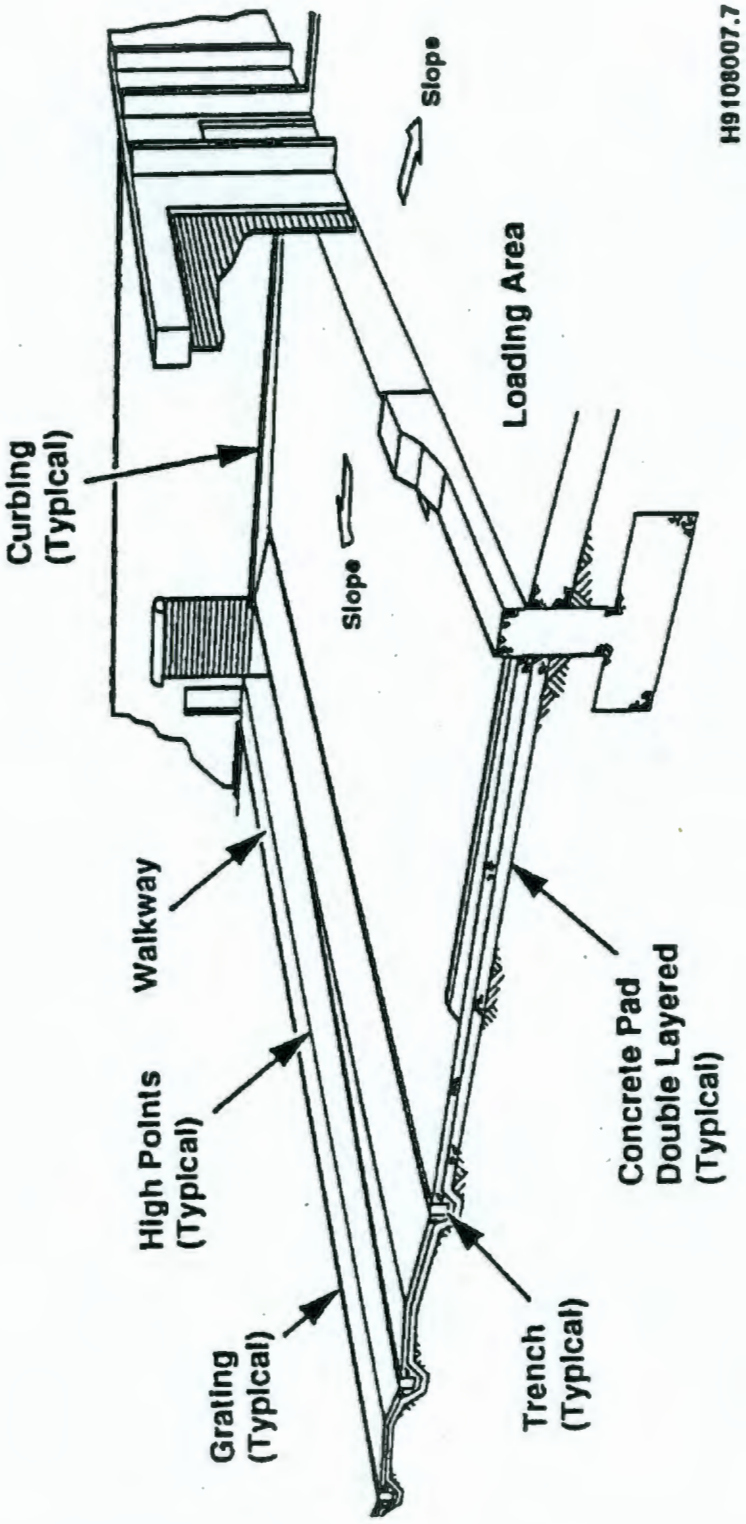


Figure 4-1. Design of the Secondary Containment System.

Table 4-1. Common Containers Stored at the 616 Nonradioactive Dangerous Waste Storage Facility.

| DOT[a] Spec. | Container | Material | Ref.[b] (49 CFR 178) |
|---|---|---|---|
| 12P/12U (UN6HG2) | CF[c] w/inner poly liner | Fiberboard/polyethylene | 178.522 |
| 12B (UN4G1) | CF | Fiberboard | 178.516 |
| 17C (UN1A1) | DM[d] | Low carbon steel | 178.504 |
| 17E (UN1A1) | DM | Low carbon steel | 178.504 |
| 17H (UN1A2) | DM | Low carbon steel | 178.504 |
| 34 (UN1A1) | DF[e] | Polyethylene | 178.509 |
| 37A (UN1A1) | DM | Low carbon steel | 178.504 |
| 37B (UN1A1) | DM | Low carbon steel | 178.504 |

[a]U.S. Department of Transportation specifications.
[b]Reference section of regulations.
[c]CF = fiberboard box.
[d]DM = drum, metal.
[e]DF = drum, fiberboard.

Table 4-2. Container Management Per Storage Cell.

| Cell | Maximum containers per tier<br>Tier 1 (ground) | Tier 2 |
|---|---|---|
| <u>Regular storage</u> | | |
| Caustics | 50 (208 liters) | 40 (208 liters)<br>10 (113 liters)[a] |
| Oxidizers | 50 (208 liters) | 40 (208 liters)<br>10 (113 liters)[a] |
| Combustibles | 58 (208 liters) | 40 (208 liters)<br>18 (113 liters)[b] |
| Acids | 60 (208 liters) | 40 (208 liters)<br>20 (113 liters)[b] |
| <u>Flammable liquid storage</u> | | |
| Class 1A | 32 (208 liters)<br>1 flammable liquid storage cabinet (512 liters) | 32 (75 liters)[c] |
| Class 1B* | 40 (208 liters) | 40 (113 liters)[d] |

[a]Tier 2, row 1 ≤30 113 liters (Chapter 6.0, Figure 6-4).
[b]Tier 2, rows 1 and 6 ≤113 liters) (Chapter 6.0, Figure 6-4).
[c]Tier 2 ≤75 liters.
[d]Tier 2 ≤113.6 liters.
*A flammable liquid storage cabinet(s) can be used in the Class 1B storage cell resulting in the following arrangement:

| | |
|---|---|
| 36 (208.2 liters)<br>1 flammable liquid storage cabinet (512 liters) | 36 (113.6 liters)[d] |
| or | |
| 34 (208.2 liters)<br>2 flammable liquid storage cabinet (1,024 liters) | 34 (113.6 liters)[d] |

Because the total volume stored in this configuration (12,094.4 liters) is less than the other (12,870.4 liters), the volume is not listed in Table 4-2. Table 4-4 also is based on the maximum volume stored.

Table 4-3. Storage Cell Stacking Restrictions.

| Cell | Stacked container volume restrictions | |
|---|---|---|
| | Single row | Double row |
| Oxidizer | ≤113 liters | ≤208 liters |
| Caustic | ≤113 liters | ≤208 liters |
| Acid | ≤113 liters | ≤208 liters |
| Combustible | ≤113 liters | ≤208 liters |
| Class 1B flammable | ≤113 liters | ≤208 liters |
| Class 1A flammable | ≤ 75 liters | ≤ 75 liters |

Note: Container stacking is limited to a base container and a second tier.

Table 4-4. Storage Cell Volume (liters).

| Cell | Total cell containment volume | Maximum volume of stored containers |
|---|---|---|
| Oxidizer | 3,123 | 19,873.4 |
| Caustic | 3,123 | 19,873.4 |
| Combustible | 3,452.3 | 22,447.5 |
| Acid | 3,463.7 | 23,091 |
| Class 1A flammable | 2,414.3 | 9,596 |
| Class 1B flammable | 2,723.1 | 12,870.4 |

## CONTENTS

5.0 GROUNDWATER MONITORING [E] . . . . . 5-1

This page intentionally left blank.

# 5.0 GROUNDWATER MONITORING [E]

The 616 NRDWSF is not operated as a dangerous waste surface impoundment, waste pile, land treatment unit, or landfill as defined in WAC 173-303-645(1)(a). Therefore, groundwater monitoring is not required.

This page intentionally left blank.

## CONTENTS

6.0 PROCEDURES TO PREVENT HAZARDS [F] . . . . . 6-1

6.1 SECURITY [F-1] . . . . . 6-1
6.1.1 Security Procedures and Equipment [F-1a] . . . . . 6-1
6.1.1.1 24-hour Surveillance System [F-1a(1)] . . . . . 6-1
6.1.1.2 Barrier and Means to Control Entry [F-1a(2),(2a),(2b)] . . . . . 6-1
6.1.1.3 Warning Signs [F-1a(3)] . . . . . 6-1
6.1.2 Waiver [F-1b] . . . . . 6-1

6.2 INSPECTION PLAN [F-2] . . . . . 6-1
6.2.1 General Inspection Requirements [F-2a, b, and c] . . . . 6-2
6.2.1.1 Types of Problems . . . . . 6-2
6.2.1.2 Frequency of Inspections . . . . . 6-2
6.2.2 Specific Process Inspection Requirements [F-2d and (1)] 6-4

6.3 PREPAREDNESS AND PREVENTION REQUIREMENTS [F-3] . . . . . 6-4
6.3.1 Equipment Requirements [F-3a] . . . . . 6-4
6.3.1.1 Internal Communications . . . . . 6-4
6.3.1.2 External Communications . . . . . 6-4
6.3.1.3 Emergency Equipment . . . . . 6-5
6.3.1.4 Water for Fire Control . . . . . 6-5
6.3.2 Aisle Space Requirement [F-3b] . . . . . 6-5

6.4 PREVENTIVE PROCEDURES, STRUCTURES, AND EQUIPMENT [F-4] . . . . 6-5
6.4.1 Unloading Operations . . . . . 6-5
6.4.2 Run-Off . . . . . 6-6
6.4.3 Water Supplies . . . . . 6-6
6.4.4 Equipment and Power Failure . . . . . 6-7
6.4.5 Personnel Protection Equipment . . . . . 6-7

6.5 PREVENTION OF REACTION OF IGNITABLE, REACTIVE, AND INCOMPATIBLE WASTES [F-5] . . . . . 6-7
6.5.1 Precautions to Prevent Ignition or Reaction of Ignitable or Reactive Waste [F-5a] . . . . . 6-7
6.5.2 General Precautions for Handling Ignitable or Reactive Waste and Mixing of Incompatible Waste [F-5b] . . . . . 6-8

## FIGURES

6-1. Building 616 Weekly Inspection . . . . . F6-1
6-2. Current Container Storage Layout . . . . . F6-2

This page intentionally left blank.

# 6.0 PROCEDURES TO PREVENT HAZARDS [F]

The 616 NRDWSF is designed and operated to minimize exposure of the general public and operating personnel to dangerous waste.

## 6.1 SECURITY [F-1]

The following sections describe the security measures, equipment, and warning signs used to control entry into the 616 NRDWSF.

### 6.1.1 Security Procedures and Equipment [F-1a]

The following sections describe the 24-hour surveillance system, barrier, and warning signs used to provide security and control access to the 616 NRDWSF.

**6.1.1.1 24-hour Surveillance System [F-1a(1)].** The entire Hanford Facility is a controlled access area. For surveillance information, refer to the General Information Portion (DOE/RL-91-28).

**6.1.1.2 Barrier and Means to Control Entry [F-1a(2),(2a),(2b)].** Manned barricades are maintained around the clock at checkpoints on vehicular access roads leading to the 616 NRDWSF. The 616 NRDWSF could be occupied at any time. The 616 NRDWSF is locked when unoccupied.

**6.1.1.3 Warning Signs [F-1a(3)].** Warning signs stating "DANGER--UNAUTHORIZED PERSONNEL KEEP OUT" are posted at each entrance to the active portion of the 616 NRDWSF. These signs are in English, legible from a distance of 7.6 meters and visible from all angles of approach.

### 6.1.2 Waiver [F-1b]

Waiver of the security procedures and equipment requirements for the 616 NRDWSF is not requested. Therefore, the requirements of WAC 173-303-310 are not applicable to the 616 NRDWSF.

## 6.2 INSPECTION PLAN [F-2]

This section describes the method and schedule for inspection of the 616 NRDWSF. The purpose of inspection procedures at the 616 NRDWSF is to identify leaking containers, improperly stored containers, and degradation of containment and safety equipment and/or systems. These inspections help ensure that situations do not exist that could cause or lead to the release of dangerous waste to the environment or pose a threat to human health. Abnormal conditions identified by an inspection must be corrected on a schedule that prevents hazards to workers, the public, and the environment.

### 6.2.1 General Inspection Requirements [F-2a, b, and c]

The content and frequency of inspections are described in this section. The inspections are documented on inspection datasheets and logsheets. The schedule and inspection records are kept at the 616 NRDWSF in the inspection logbooks. Inspection records are retained for a minimum of 5 years.

**6.2.1.1 Types of Problems.** Each day the 616 NRDWSF is occupied for the purpose of waste handling, a nuclear process operator performs a daily inspection of areas subject to spills (e.g., loading and unloading areas and waste handling areas).

Weekly inspections are performed to ensure operation and management of the 616 NRDWSF is in accordance with WAC 173-303-630. If the 616 NRDWSF has no containerized waste in storage, weekly inspections will not be conducted. These items are listed in Section 6.2.1.2.

The fire systems at the 616 NRDWSF are inspected annually by representatives of the Hanford Fire Department. Their inspection includes the following:

- Fire protection system inspection and testing
  - Fire alarm pull box inspection and test
  - Manual and automatic fire door inspection and test
- Wet-pipe sprinkler system inspection and testing
  - System visual inspection
  - System internal inspection
  - Pressure of incoming water supply inspection
  - Condition of gages by visual inspection
  - Flow alarm device testing
  - Zone indicated on fire alarm control panel by visual inspection
- Ignitable or reactive waste storage area inspection.

The 616 NRDWSF supervisor, or designee, conducts a monthly inspection and test of the communication and alarm systems. This inspection and test includes the following:

- Storage building evacuation alarms
- Storage building take cover alarms
- Public address system
- Portable radios and base station
- Crash alarm.

**6.2.1.2 Frequency of Inspections.** Each day the 616 NRDWSF is occupied for the purpose of waste handling, a nuclear process operator performs an

inspection of the loading/unloading areas and waste handling areas. During this inspection, the following items are addressed as required by WAC 173-303-630:

- Curbing is in good condition
- Pads/loading areas are crack free
- Trenches/sumps are locked closed, empty, and crack free
- Spill kit seal is intact
- Overpack containers are present.

The inspection results are recorded in the logbook.

Weekly inspections are performed to ensure operation and management of the 616 NRDWSF is in accordance with WAC 173-303-630. If the 616 NRDWSF has no containerized waste in storage, weekly inspections will not be conducted. A knowledgeable person cognizant of the 616 NRDWSF operations performs the weekly inspection and completes the inspection form (Figure 6-1). Discrepancies are noted in the comments section. Items inspected include the following:

- Condition of concrete floor, walls, and curbing
- Storage building structural integrity
- Safety equipment operational and in place
- Fire extinguishers in place
- Lights and fixtures
- Appropriate safety and packaging equipment
- Container structural integrity
- Secondary containment systems integrity
- Containers closed
- Corrosion of containers
- Evidence of spills or leaks
- Container labels and markings in place
- Container storage locations
- Proper aisle space
- Materials wrapped in plastic for signs of deterioration.

As required by WAC 173-303-395, an annual inspection of the 616 NRDWSF areas where ignitable or reactive waste is stored is performed by a professional knowledgeable of the Uniform Fire Code. The following information is entered into the 616 NRDWSF logbook as a result of this inspection:

- The date and time of the inspection
- The name of the person who performed the inspection
- A notation of the observations made
- Any remedial actions that were taken as a result of this inspection.

At least annually, the emergency equipment cabinet will be opened and the contents examined for degradation, respiratory protection equipment exceeding certification date, and the contents restocked as needed.

### 6.2.2 Specific Process Inspection Requirements [F-2d and (1)]

As required by WAC 173-303-630, specific items and/or problems identified during inspections are detailed in Section 6.2.1.2. The inspection records are maintained at the 616 NRDWSF for 5 years.

## 6.3 PREPAREDNESS AND PREVENTION REQUIREMENTS [F-3]

The following sections document the preparedness and prevention measures taken at the 616 NRDWSF.

### 6.3.1 Equipment Requirements [F-3a]

The following sections describe the internal and external communications systems and the emergency equipment required.

**6.3.1.1 Internal Communications.** The 616 NRDWSF is equipped with an internal communication system to provide immediate emergency instruction to personnel. The onsite communication system at the 616 NRDWSF includes telephones, a public address system, and alarm systems. The telephone system provides internal and external communication. Telephones are available in the operations office, Packaging Material and Handling Equipment Area, and on a telephone pole 23 meters east of the 616 NRDWSF, between the 616 NRDWSF and the primary staging area [the location of internal communication equipment and the primary staging area is identified in the building emergency plan (Appendix 7A)]. Alarm systems exist at the 616 NRDWSF to allow personnel to appropriately respond to various emergencies, including the following emergency situations: building evacuations, take cover events, and fire and/or explosion (Appendix 7A).

Immediate emergency instruction to personnel is provided by a public address system via speaker horns and ceiling-mounted speakers located throughout the storage building, as well as speaker horns located on the outside of the storage building.

**6.3.1.2 External Communications.** The 616 NRDWSF is equipped with devices for summoning emergency assistance from the Hanford Fire Department, the Hazardous Materials Response Team, and/or local emergency response teams, as necessary. External communication is made via a telephone communication system, a two-way radio base station, and two-way portable radios. Telephones are available in the operations office, Packaging Material and Handling Equipment Area, and on a telephone pole 23 meters) east of the 616 NRDWSF, between the 616 NRDWSF and the primary staging area [the location of external communication equipment and the primary staging area is identified in the building emergency plan (Appendix 7A)]. In addition, the following external communication systems are available for notifying persons assigned to emergency response organizations.

- Fire alarm pull boxes and fire sprinkler flow monitoring devices--connected to a system monitored around the clock by the Hanford Fire Department.

- Telephone number 911--contact point for the Hanford Facility; on notification, the Hanford Patrol Operations Center notifies and/or dispatches required emergency responders.

- Telephone number 373-3800--single point of contact for the emergency duty officer; this number can be dialed from any Hanford Site telephone.

- Crash alarm telephone system--consists of selected telephones that are disassociated from the regular system and automatically are connected to control stations.

- Two-way radio system--the system accesses the Hanford Site emergency network and can summon the Hanford Fire Department, Hanford Patrol, and/or any other assistance requested to handle emergencies.

**6.3.1.3 Emergency Equipment.** A detailed list of equipment is included in the Building Emergency Plan (Appendix 7A).

**6.3.1.4 Water for Fire Control.** The 616 NRDWSF has a potable water main installed for fire control. The available water pressure [measured at the 609-A Fire Station fire hydrant--across the street from the 616 NRDWSF (Chapter 2.0, Figure 2-1)] has a static pressure of 545 kilopascals, with a residual pressure of 269 kilopascals when flowing at 3,444.7 liters a minute.

### 6.3.2 Aisle Space Requirement [F-3b]

The container storage arrangement and aisle spacing for each storage cell are shown in Figure 6-2. Aisle spacing is sufficient to allow the movement of personnel and fire protection equipment in and around the containers. A minimum 0.76 meter aisle space will be maintained between rows of containers as required by WAC 173-303-630.

## 6.4 PREVENTIVE PROCEDURES, STRUCTURES, AND EQUIPMENT [F-4]

The following sections describe preventive procedures, structures, and equipment.

### 6.4.1 Unloading Operations

The loading and unloading areas of the 616 NRDWSF are described in Chapter 2.0, Section 2.1.6. All loading and unloading operations are carried out on concrete pads that are equipped with containment trenches. The nuclear process operators ensure the following before waste is unloaded at the 616 NRDWSF.

- All trench and sump gratings are in place.
- All interior sumps and trenches are clean and dry.
- All exterior loading pad trenches have minimum residual water.
- Loading pad trench drain plugs are closed and locked.
- Necessary storage building access doors are open.
- Area from loading pad to appropriate storage cell is clear of obstructions.
- If used, the scissor lift is operational and raised.
- The truck is placed so that container movement occurs over the loading pad.

After a shipment has been accepted for storage (Chapter 3.0, Section 3.3), the transporter is requested to unload the truck. Multiple waste containers are placed on pallets for movement into the 616 NRDWSF using pallet jacks or a forklift; the forklift is prohibited from operating in the Class 1A flammable liquid storage cell. Single containers are hand carried or moved on a dolly. The containers are placed in the storage cell as assigned on the associated hazardous waste disposal analysis record (Appendix 3A). When the storage of containers is completed, all storage building doors are closed.

### 6.4.2 Run-Off

Chapter 4.0, Section 4.1.1.7, contains information on run-off and run-on of liquid at the 616 NRDWSF.

### 6.4.3 Water Supplies

Water is supplied to the 616 NRDWSF from the Columbia River via the Hanford Site potable water system. All hose connections to the potable water line have a one-way check valve installed to prevent back flow. These check valves prevent contamination from entering the water supply lines from within the 616 NRDWSF.

The water supply system (potable and fire sprinkler supply) for the 616 NRDWSF has no backup. A backup is not necessary because of the proximity of the 609-A Fire Station, which can provide a 2 minute response time (Drawing H-13-000014 in Appendix 2A).

### 6.4.4 Equipment and Power Failure

The only powered equipment at the 616 NRDWSF is a forklift, if present, scissor lift, and the ventilation system. If the forklift or scissor lift fails, the 616 NRDWSF supervisor makes the necessary notifications for repairs. Actions taken in response to a loss of ventilation are detailed in the building emergency plan (Appendix 7A).

As described in Section 6.3.1.2, emergency communication equipment is available to summon emergency assistance in the event of a power loss.

### 6.4.5 Personnel Protection Equipment

At the 616 NRDWSF, procedures, structures, and equipment are used to prevent undue exposure of personnel to dangerous waste. The 616 NRDWSF includes eyewash stations and safety showers in the combustible storage cell and the packaging and sampling room. Protective clothing and equipment are used by personnel handling dangerous waste. Protective clothing used at the 616 NRDWSF consists of foot, eye, and face protection.

The following protective clothing is worn when handling waste containers:

- Safety glasses
- Chemical-resistant gloves
- Chemical-resistant coveralls
- Approved safety shoes
- Face shield.

The following protective clothing is worn when handling empty new containers:

- Safety glasses or goggles
- Leather gloves
- Approved safety shoes.

## 6.5 PREVENTION OF REACTION OF IGNITABLE, REACTIVE, AND INCOMPATIBLE WASTES [F-5]

The following sections describe prevention of reaction of ignitable, reactive, and incompatible waste.

### 6.5.1 Precautions to Prevent Ignition or Reaction of Ignitable or Reactive Waste [F-5a]

All waste, including ignitable waste, is stored in sealed U.S. Department of Transportation-approved containers. Ignitable waste is stored in the Class 1A or Class 1B flammable liquid storage cells (Chapter 2.0, Figure 2-2). The 1A cell is equipped with National Fire Protection Association 70 Class I/ Division I (NFPA 1989) electrical fixtures, intrinsically safe chemical

transfer pumps and receptacles, an explosion relief wall, 'blow out' pressure relief ceiling panels, and grounding cables. Operation of the electric forklift is prohibited in the Class 1A flammable liquid storage cell.

The 616 NRDWSF does not store reactive waste as defined in WAC 173-303-090(7)(a) (vi), (vii), or (viii).

Water-reactive waste is stored in U.S. Department of Transportation-approved containers inside portable weatherproof storage cabinets. These cabinets are standalone units that are placed in the flammable liquid storage cells (Figure 6-2) on an as-needed basis. Other reactive waste is stored throughout the storage building depending on waste type and compatibility.

Smoking is prohibited in the storage building. Multiple "NO SMOKING" signs are present to remind occupants.

### 6.5.2 General Precautions for Handling Ignitable or Reactive Waste and Mixing of Incompatible Waste [F-5b]

Based on the dangerous characteristics identified by the generating unit, specific packaging instructions are provided. General guidance is provided to the generating unit in an internal document concerning waste packaging and disposal requirements. A compatibility analysis is performed on the waste as well. Incompatible waste is not packaged within the same container or placed in the same storage cell.

**Building 616 Weekly Inspection** (sheet 1 of 3)

Inspection No._____ Status:_____ Date:_____ Time:_____

| | Yes | No | If no, specify |
|---|---|---|---|
| **1.0 Office Area** | | | |
| Emergency light operable | | | |
| Exit unobstructed | | | |
| Fire extinguisher charged | | | |
| Public address system operating | | | |
| Ventilation indicator lights operating | | | |
| Telephone operating | | | |
| Radio operating | | | |
| Evacuation alarm tested once monthly; date tested: | | | |
| **2.0 Hallway** | | | |
| Exit sign operating | | | |
| Fire extinguisher charged | | | |
| Exits unobstructed | | | |
| Protective equipment supply present per the emergency equipment list* | | | |
| Pressure differential gage working-reading: | | | |
| **3.0 Receiving Material and Handling Equipment Area** | | | |
| Absorbents present | | | |
| Emergency equipment present | | | |
| Emergency light operable | | | |
| Exit light operating | | | |
| Exit unobstructed | | | |
| Fire extinguisher charged | | | |
| Overpack drums present | | | |
| Public address system (audible) | | | |
| Telephone operating | | | |
| Radio operating | | | |
| **4.0 Structure Exterior** | | | |
| Curbing in good condition | | | |
| Exits unobstructed | | | |
| Pads/loading area crack free | | | |
| Trenches locked closed/empty | | | |
| No combustibles stored within 50 feet of structure | | | |
| Roads/fire lanes unobstructed | | | |
| Exterior telephone operating | | | |

* This equipment shall be individually inspected and documented by type, and be in adequate condition, and in the quantities listed. The revised checklist shall be submitted for approval to the Department within 30 days of the effective date of this Permit.

Figure 6-1. Building 616 Weekly Inspection. (sheet 1 of 3)

## Building 616 Weekly Inspection. (sheet 2 of 3)

| | Packaging and Sampling Room[a] | Oxidizer[a] | Caustic[a] | Acid[a] | Combustible[a] | Flammable 1B[a] | Flammable 1A[a] |
|---|---|---|---|---|---|---|---|
| 5.0 Storage Areas | | | | | | | |
| A. Container Condition: | | | | | | | |
| Closed | | | | | | | |
| Corrosion | | | | | | | |
| Evidence of leakage | | | | | | | |
| Required labels | | | | | | | |
| Structural defects | | | | | | | |
| B. Structures: | | | | | | | |
| Curbing | | | | | | | |
| Exits unobstructed | | | | | | | |
| Floor | | | | | | | |
| Roof/walls | | | | | | | |
| Signs | | | | | | | |
| C. Safety/Emergency Equipment | | | | | | | |
| [Amendment III.1.B.x.] Personal Protective Equipment* | | NA | NA | NA | NA | NA | NA |
| Emergency light operable | | NA | | NA | | | NA |
| Exit light operating | | | | | | | |
| Fire extinguisher charged | NA | NA | NA | NA | | | NA |
| Public address system (audible) | | | | | | | |
| Safety shower/eye wash tested/flushed (weekly); date tested: | | NA | NA | NA | | NA | NA |
| D. Container Location[b] | | | | | | | |
| Waste Tracking Form ID No./Location | | | | | | | |
| Waste Tracking Form ID No./Location | | | | | | | |
| Waste Tracking Form ID No./Location | | | | | | | |

[a]N/A - Not applicable.
X - No problems noted.
C - See comments for problem description or remedial action required.
[b]Three container locations are verified against the storage building inventory. Record the waste tracking form ID No./location for each container checked above. Record discrepancies identified in the comments section.
* Located in sealed cabinet. Check for integrity of seal.

Figure 6-1. Building 616 Weekly Inspection. (sheet 2 of 3)

**Building 616 Weekly Inspection.** (sheet 3 of 3)

6. Comments

_____

_____

_____

_____

_____

_____

Inspector _____
(print name)

_____
(sign name)

7. Remedial Action Taken

_____

_____

_____

_____

8. Solid Waste Operations Manager Acknowledgment of Action

Completion Date: _____

Today's Date: _____

_____
(print name)

_____
(sign name)

Figure 6-1. Building 616 Weekly Inspection. (sheet 3 of 3)

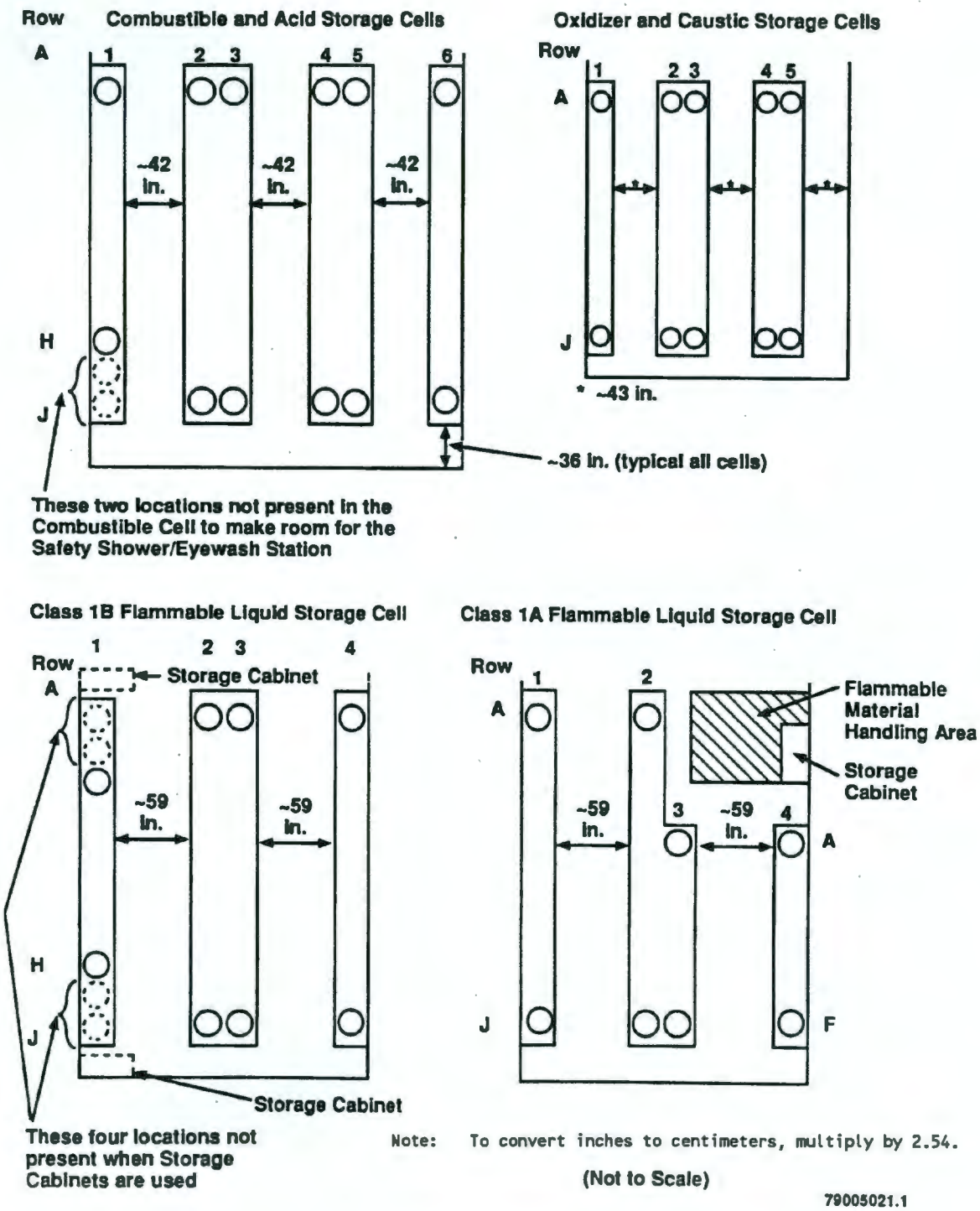


Figure 6-2. Current Container Storage Layout.

## CONTENTS

7.0 CONTINGENCY PLAN [G] . . . . . 7-1

## APPENDIX

7A BUILDING EMERGENCY PLAN - 616 BUILDING . . . . . APP 7A-i

This page intentionally left blank.

# 7.0 CONTINGENCY PLAN [G]

All instances where the emergency response number is cited as "811" shall be changed to "911." The WAC 173-303 requirements for contingency plans are satisfied in the following documents: the *Building Emergency Plan - 616 Building* (Appendix 7A) and the Hanford Facility Contingency Plan (DOE/RL-93-75).

This page intentionally left blank.

## CONTENTS

8.0 PERSONNEL TRAINING [H] . . . . . 8-1

## APPENDIX

8A TRAINING . . . . . APP 8A-i

This page intentionally left blank.

# 8.0 PERSONNEL TRAINING [H]

The training plan provided in Appendix 8A discusses training requirements pertaining to the 616 Nonradioactive Dangerous Waste Storage Facility.

The training program is designed to be compliant with all applicable federal, state, and DOE-RL training requirements. The training program complies with requirements contained within WAC 173-303-330 for the development of a written dangerous waste training program. The training program is designed to prepare personnel to manage and maintain TSD units in a safe, effective, efficient, and environmentally sound manner. In addition to preparing employees to manage and maintain TSD units under normal conditions, the training program ensures that employees are prepared to respond in a prompt and effective manner should abnormal or emergency conditions occur.

This page intentionally left blank.

# CONTENTS

9.0 EXPOSURE INFORMATION . . . . . 9-1

This page intentionally left blank.

# 9.0 EXPOSURE INFORMATION

The 616 NRDWSF does not store, treat, or dispose of hazardous waste in a surface impoundment or a landfill as defined in 40 CFR 270.10 and RCRA, Section 3019. Therefore, exposure information is not required.

This page intentionally left blank.

## CONTENTS

10.0 WASTE MINIMIZATION [D-9] . . . . . 10-1

This page intentionally left blank.

# 10.0 WASTE MINIMIZATION [D-9]

To fulfill the requirements of 40 CFR 264.73(b)(9), a certification form that the 616 NRDWSF have a waste minimization/pollution prevention program in place will be entered, annually, into the 616 NRDWSF operating record.

This page intentionally left blank.

## CONTENTS

11.0 CLOSURE AND FINANCIAL ASSURANCE [I] . . . . . 11-1

11.1 CLOSURE PLAN [I-1] . . . . . 11-1
11.1.1 Closure Performance Standard [I-1a] . . . . . 11-1
11.1.1.1 Performance Standard . . . . . 11-1
11.1.1.2 Removal or Decontamination Standard . . . . 11-1
11.1.2 Maximum Waste Inventory [I-1b(1) and 1c] . . . . . 11-3
11.1.3 Inventory Removal, Disposal or Decontamination of Equipment, Structures, and Soils [I-1b(2) and (3)] . . . . . 11-3
11.1.3.1 Inventory Removal . . . . . 11-4
11.1.3.2 Decontamination of Building Equipment . . . 11-4
11.1.4 The 616 Nonradioactive Dangerous Waste Storage Facility Sampling Plan [I-1b(4) and (a)] . . . . . 11-5
11.1.4.1 Sampling Plan Objectives . . . . . 11-5
11.1.4.2 Site Safety . . . . . 11-6
11.1.4.3 Analytical Parameters . . . . . 11-6
11.1.4.4 Sampling Activities . . . . . 11-6
11.1.4.5 Sampling Locations . . . . . 11-10
11.1.4.6 Evaluation of Data . . . . . 11-12
11.1.4.7 Statistical Treatment of Data . . . . . 11-12
11.1.4.8 Assessment of Data Reliability . . . . . 11-13
11.1.4.9 Reporting . . . . . 11-13
11.1.4.10 Sampling Equipment, Containers, and Preservation . . . . . 11-13
11.1.4.11 Sampling Quality Control . . . . . 11-15
11.1.4.12 Analytical Procedures . . . . . 11-19
11.1.4.13 Contamination Control . . . . . 11-19
11.1.4.14 Decontamination of Equipment Used for Closure . . . . . 11-19
11.1.4.15 Removal of Contaminated Material and Waste Residues . . . . . 11-19
11.1.4.16 Restoration . . . . . 11-19
11.1.4.17 Modifications to the Waste Sampling and Analysis Plan . . . . . 11-19

11.2 SCHEDULE FOR CLOSURE [I-1f] . . . . . 11-20

## APPENDICES

11A RANDOM NUMBERS TABLE . . . . . APP 11A-i

11B DESCRIPTION OF PROCEDURES . . . . . APP 11B-i

## FIGURES

11-1. Configuration and Layout of a Typical Cell . . . . . F11-1
11-2. Sampling Flow Path . . . . . F11-2
11-3. Floor Plan of the 616 Nonradioactive Dangerous Waste Storage Facility Showing Locations of the Trenches, Sumps, Water Lines, Basins, and Safety Showers . . . . . F11-3
11-4. Trench and Sump Sample Locations . . . . . F11-4.1
11-5. Loading Pad Sample Locations. (sheet 1 of 2) . . . . . F11-5.1
11-6. Tile Field and French Drain Sample Location . . . . . F11-6
11-7. Schedule for Closure Activities . . . . . F11-7

## TABLES

11-1. Concrete Analysis . . . . . T11-1
11-2. 616 Nonradioactive Dangerous Waste Storage Facility Sample Location Summary . . . . . T11-2

# 11.0 CLOSURE AND FINANCIAL ASSURANCE [I]

This chapter presents the closure plan for the 616 NRDWSF. The 616 NRDWSF is a clean, well-maintained dangerous waste container storage unit. Detailed records are maintained of materials stored at the 616 NRDWSF and spills and other unusual occurrences are handled promptly and are well documented. As a controlled container storage unit, the 616 NRDWSF is not anticipated to become extensively contaminated (the use of the word contaminated refers to contamination by dangerous chemicals regulated by Ecology); therefore, the closure approach will be clean closure. Consistent with the criteria that must be met to clean close a TSD unit, no postclosure activities will be necessary. Closure of the 616 NRDWSF will comply with WAC 173-303-610 regulations for the closure of TSD units. This chapter describes the performance standards that will be met, and closure activities that will be conducted to achieve clean closure.

## 11.1 CLOSURE PLAN [I-1]

The 616 NRDWSF became operational in 1986 and is designed for a 20-year operational life. The 616 NRDWSF Dangerous Waste Permit will be in effect for a maximum of 10 years. Before the end of the 10-year permit lifespan, the storage unit will be evaluated for operational fitness and repermitted. Any deficiencies (including deficiencies associated with the closure plan) will be corrected before continued use is considered.

Activities that are planned to achieve clean closure are presented in the following sections.

### 11.1.1 Closure Performance Standard [I-1a]

The following sections address closure performance standards and waste removal and decontamination standards.

**11.1.1.1 Performance Standard.** Closure of the 616 NRDWSF will be conducted in a manner that meets the closure performance standards of WAC 173-303-610(2)(a).

These standards will be achieved by removing, to below background levels or regulatory thresholds, dangerous waste from the 616 NRDWSF and decontaminating or removing all equipment, structures, soils, or other materials containing or contaminated with dangerous waste.

**11.1.1.2 Removal or Decontamination Standard.** Clean closure of the 616 NRDWSF will require removal and disposal of all dangerous waste, contaminated equipment, and rinsates to standards specified in WAC 173-303-610(2)(b). Sampling will ensure that all dangerous waste contamination is detected and removed as part of closure.

Contaminated equipment in the 616 NRDWSF will be decontaminated until wipe sample analyses of the portions of the equipment, which would be in contact with potentially contaminated materials or fluids, demonstrate that the equipment is not a dangerous waste. The level of quantitation will be used as the action level for wipe samples. Clean equipment will be reused. Any equipment that cannot be decontaminated will be disposed of as dangerous waste.

All concrete within the 616 NRDWSF boundary is susceptible to contamination and there are no other pours of the same concrete outside of the unit boundary. Because there is no other concrete available to establish a background level, the approach detailed in Table 11-1 will be used for the analysis of the concrete samples. All sampling and analyses necessary for soils underneath a contaminated concrete layer will be performed before removal of the overlying concrete.

The concrete floor of the 616 NRDWSF includes the trenches and sumps. The trenches and sumps of the 616 NRDWSF are assumed to be the areas of the floor subjected to the highest level of contamination. Consequently, the disposition of the floor will be contingent on results of the core sampling of the trenches and sumps. In addition to the trenches and sumps, the loading areas of the 616 NRDWSF also will be core sampled. The floor, trenches, and sumps of the storage and loading areas will be removed and disposed of as dangerous waste if contamination is found in the designating sample. The designating sample will be considered to be the sample indicating the highest level of contamination. Action levels for the analysis of the core samples will be established in accordance with Table 11-1.

The soil immediately surrounding the loading areas will be sampled for verification that the environment has not been affected by the 616 NRDWSF operations. Should contaminants be detected above background levels, the soil will be excavated until the level of chemical constituents around the 616 NRDWSF is below or equal to that of soil background levels. Soil background levels will be based on established and accepted Hanford Site soil background information (WHC 1991) or established by soil sampling per SW-846 (EPA 1986).

All sampling and analyses necessary for soils underneath a contaminated concrete layer will be performed before removal of the overlying concrete. All soils that exceed the clean closure standards of WAC 173-303-610(2)(b) will be managed in a manner analogous to that previously discussed (WHC 1991 and EPA 1986).

To achieve the above-mentioned standards within the tolerances specified, distinct sampling strategies and methods have been determined for the floor of the cells, loading areas, equipment, and soil. These strategies and methods are discussed in Section 11.1.4.

### 11.1.2 Maximum Waste Inventory [I-1b(1) and 1c]

Of the 6 cells, the caustic cell and the oxidizer cell each can hold 19,873.4 liters, the combustible cell can hold 22,447.5 liters, and the acid cell can hold 23,091 liters of waste. The remaining 2 cells, the Class 1A flammable cell and the Class 1B flammable cell, can hold 9,596 liters and 12,870.4 liters, respectively. To achieve this capacity, the waste containers would have to be double stacked as detailed in Chapter 4.0, Section 4.1.1.2. In total, 108,395.3 liters of waste can be stored in the 616 NRDWSF. Figure 11-1 shows the configuration and layout of a typical cell.

### 11.1.3 Inventory Removal, Disposal or Decontamination of Equipment, Structures, and Soils [I-1b(2) and (3)]

Closure activities will entail sampling and decontamination or removal and disposal of the structure, equipment, and soil. These activities will consist of the following steps, as necessary, to determine what dangerous waste, if any, has contaminated the building, the associated equipment, the loading areas, and the surrounding soil.

1. Decontaminate the storage building floor and walls.

2. Decontaminate the associated storage building equipment.

3. Decontaminate the loading areas.

4. Perform verification sampling of the storage building trenches and sumps, associated equipment, and loading areas to determine the effectiveness of decontamination procedures.

5. Perform repeated decontamination and verification sampling until the removal of all contaminants is verified or the component is properly disposed of.

6. Excavate and dispose of any contaminated soil.

7. Perform repeated excavation and verification sampling until all contaminated soil has been removed.

8. Decontaminate any equipment used in performing closure activities.

9. Dispose of all contaminated materials and rinsates generated during the closure activities.

10. Restore the area after closure activities are complete.

11. Certify that closure activities were completed in accordance with the approved plan.

A sampling flow path for the 616 NRDWSF components is shown in Figure 11-2.

**11.1.3.1 Inventory Removal.** All waste inventory will be shipped offsite to a permitted TSD facility within 90 days after receiving the last volume of dangerous waste. Following the final shipment of waste, the 616 NRDWSF floor, walls, and loading areas will be washed down and decontaminated. An appropriate decontamination method such as high-pressure, low-volume steam cleaning coupled with detergent washes will be used. Such a combination is nondangerous in itself and will be effective for both organic and inorganic constituents. The decontamination rinsate will be containerized, sampled, designated and, if regulated, shipped offsite to a permitted TSD facility. All materials packaged for shipment to a permitted TSD facility will be in U.S. Department of Transportation-approved containers that are compatible with the waste contents. All containers will be labeled and shipped with an accompanying offsite manifest. All dangerous waste rinsate generated from decontamination of the 616 NRDWSF will be handled in the same manner.

**11.1.3.2 Decontamination of Building Equipment.** Most of the equipment at the 616 NRDWSF is used for drum handling. This equipment could become contaminated in the event of a leaking or ruptured drum. Storage building equipment includes the following:

- Barrel sling
- Drum dollies, hand trucks, pallet jacks, and/or electric forklift truck
- Chemical transfer pumps
- Gantry crane
- Barrel tongs.

Any contaminated storage building equipment will be decontaminated with an appropriate decontamination method, such as high-pressure, low-volume steam cleaning coupled with detergent washes. The equipment decontamination rinsate will be handled in the same manner as the storage building decontamination rinsate. Equipment will be decontaminated until wipe sample analysis shows no detectable contamination.

Other equipment within the storage building not associated with drum handling includes cold and hot water lines servicing the basins and safety showers. As shown in Drawing H-6-1559 in Appendix 4B, the cold water line enters the receiving area at the change rooms and is routed to various locations within the storage building. A counter top with two stainless steel basins with their own independent hot water heater is provided in the packaging and sampling room. Both basins have hot and cold running water. The basins are provided for emergency use and do not have drains. The storage building has two safety showers, one in the packaging and sampling room and one in the combustible cell. The cold water line feeds these showers as well as hose bibs in each cell. The hose bibs serve as a wash water source if water is needed. To protect the water supply, each hose bib has a back flow preventor.

The hot water heater in the packaging and sampling room is piped to the hot water faucets at the basins as well as along the north wall to the combustible cell where the piping is capped off. The water from the showers drains to the floor and to the trenches (sampling and decontamination of the trenches are discussed in Section 11.1.4). The showers in the storage portion of the 616 NRDWSF are not expected to be contaminated with dangerous waste and will not be sampled for dangerous waste contamination. The tile field will be sampled for verification purposes (sampling of the tile field is discussed in Section 11.1.4.4.4). The basins will be sampled and decontaminated if, based on documentation, the basins have been used for handling of dangerous constituents. The basins will be wipe sampled and the samples will be analyzed for the documented constituents that were released to the basins.

### 11.1.4 The 616 Nonradioactive Dangerous Waste Storage Facility Sampling Plan [I-1b(4) and (a)]

This section details the sampling plan that will be implemented following the removal of the dangerous waste inventory and the initial building decontamination.

The waste sampling and analysis plan has been prepared to evaluate contamination, if any, at the 616 NRDWSF. A flowchart for sampling activities is provided in Figure 11-2.

The walls of the storage cells are not expected to be contaminated with dangerous waste and therefore will not be sampled. The walls are sealed, to a height of 2.4 meters, with an epoxy sealant (Chapter 4.0, Section 4.1.1.4), which prevents material from soaking into the concrete. The 616 NRDWSF uses rigid documentation showing the time, location, and analysis to verify that spills are cleaned up. Any material spilled in the 616 NRDWSF is removed and verification samples are taken to ensure that no residue remains (Chapter 4.0, Section 4.1.1.8). Therefore, it is not necessary to sample the walls of the 616 NRDWSF because the walls are known to be clean.

**11.1.4.1 Sampling Plan Objectives.** The objectives of the 616 NRDWSF sampling plan are as follows:

- Obtain local background concentrations for soil, if required (Section 11.1.1.2)
- Determine whether the concrete floor and loading pads contain dangerous waste constituents as defined by WAC 173-303
- Identify and quantify the specific dangerous waste constituents (if any) that are present using methods outlined in SW-846 (EPA 1986). If any other methods are used, the methods will be referenced and submitted to Ecology
- Evaluate sample analysis data to determine closure actions.

**11.1.4.2 Site Safety.** The following sections identify measures that will be in place during implementation of the sampling plan to ensure personnel safety.

**11.1.4.2.1 Health and Safety Plan.** A site-specific version of the general RCRA/CERCLA investigation health and safety manual will be developed to be used for sampling at the 616 NRDWSF. This plan will be completed and added to the closure plan before initiation of sampling activities.

**11.1.4.2.2 Standard Safety Procedures.** The following safety procedures will apply each time personnel make a site entry for sampling purposes.

- No personnel will be at the site without a designated 'buddy'.
- One of the people entering the site will be designated to be in charge.
- Personal protective equipment will be worn as specified in the health and safety plan. Approved deviations will be entered in the field logbook and signed by the field team leader (cognizant engineer) and the site safety officer.
- Field work will be planned before the site is entered.
- Equipment needed for work will be inventoried and inspected before the site visit to ensure that all equipment is present and in operable condition.

**11.1.4.3 Analytical Parameters.** All samples taken as part of the closure of the 616 NRDWSF will be analyzed for the constituents identified in Appendix IX of 40 CFR 264, unless specified otherwise in the text of this closure plan. The 616 NRDWSF sampling plan was developed to determine the presence of contamination that could have resulted from the storage of dangerous waste.

**11.1.4.4 Sampling Activities.** Sampling activities will be conducted in the 616 NRDWSF as follows:

- Collect local background soil samples
- Core the concrete floor and loading pads
- Collect samples of the soil immediately surrounding the loading pads
- Collect samples of the soil from the tile field and french drain.

Sampling procedures to be used for establishing local background concentrations and for determining whether chemical waste has contaminated the storage building and loading pads are described in this section. Sampling procedures will be conducted in conformance with procedures described in Appendix 11B.

**11.1.4.4.1 Background Soil Samples.** Background soil sampling will be done at the time of closure, if required (Section 11.1.1.2). Five initial samples will be taken at a distance from the 616 NRDWSF such that the soil would not be impacted by the storage unit operations, but would still be in a

similar geologic strata. Standard statistical analyses will be performed to approximate the background population distribution function. Metals are expected to be found in a log normal distribution in the soil; therefore, the natural logarithm of the analytical value will be calculated for use in determining means and standard deviations and in comparing data from the soil immediately surrounding the 616 NRDWSF. Other dangerous constituents are expected to follow in a normal distribution in the soil, so actual analytical values will be used for calculations and comparisons. If the variance is large and, therefore, the computed background threshold value (based on at least 90 percent confidence) is too large, further background sampling might be necessary.

For those cases where comparisons with the background threshold value are not applicable, samples will be compared to regulatory thresholds. Soil samples will be considered contaminated if the constituent levels are above a 3-sigma tolerance limit on the background mean.

**11.1.4.4.2 Concrete Floor.** The floor of the 616 NRDWSF is poured concrete. A penetrating sealant has been applied to seal concrete pores and fill any cracks that might have developed while the concrete set up (Chapter 4.0, Section 4.1.1.4). Any further cracks are filled as the cracks are detected in the weekly inspection of the storage building or during regular 616 NRDWSF operations. Resealing also occurs at regular intervals. In accordance with existing operating procedures used at the storage building, spills are contained (with absorbent material if liquid), the area of the spill is contained and/or stabilized, and the area is cleaned up. The recovered material is shipped offsite to a permitted TSD facility.

The trenches and sumps are assumed to be the areas of the floor subject to the highest level of contamination. The disposition of the floor will be determined by sampling and verification of the trenches and sumps. Waste entering the trenches and sumps is in a liquid state and is assumed to be relatively homogeneous. The sample locations have been placed based on this assumption. Cell trenches have center sumps that are 0.3 meter by 0.3 meter by 12.7 centimeters in size. Walkway trenches have no sumps, but the trenches slope down to one end. Room sumps are flat bottomed. The trench and sump configuration is shown in Figure 11-3. The areas to be sampled are shown in Figure 11-4.

For verification purposes, each trench and sump will be core sampled. Core samples will be taken to determine whether or not regulated constituents have penetrated the concrete sealant. Two samples will be taken in each trench, one random and one authoritative (in the deepest part of the trench). One sample will be taken in the center of each sump. A coring device will cut a core from each selected location.

The coring device employs a diamond bit that uses distilled water as a cutting lubricant to minimize dust generation. No organic-based lubricant will be used. An industrial-size shop vacuum will be used to remove excess water from around the core to minimize surface contamination flowing into the underlying material. The waste water from the shop vacuum will be emptied into a new U.S. Department of Transportation-approved container and will be

stored at the 616 NRDWSF while awaiting disposal. A description of the procedure to be used for decontaminating the coring device is located in Appendix 11B. All decontamination fluids will be containerized with the waste water.

Once the core is cut, the core will be withdrawn and protected from cross-contamination. A laboratory will perform analyses on the core in accordance with procedures defined in Table 11-1.

If the analyses of the concrete cores indicate that contamination is present and has penetrated the sealant, the associated floor, trench, and sump will be removed, placed in a containment module, and disposed of as dangerous waste.

In the event that contaminants have penetrated the sealant, the core holes will be advanced through the concrete to determine the extent of contamination. Should the contamination go completely through the concrete, the core holes will be advanced through the soil. Soil samples will be taken at the surface, at a 0.3 meter depth, and at a 0.61 meter depth. It can be shown that concentrations of inorganic constituents added to the soil by sorption are greatest in the upper few inches (millimeters), and decreases with increased thickness of the soil column. Because of the well known process of sorption (Pendias and Pendias 1984; Routson et al. 1979; Conway 1982; Freeze and Cherry 1979), any contamination remaining in the soil would be the result of equilibrium reactions and/or irreversible sorption. In either case, residual contamination would be concentrated mostly in the uppermost part of the soil column, with rapidly decreasing concentrations downward. Therefore, the uppermost part of the soil column is most likely to contain contamination if contamination is present. Because the potential contamination from the 616 NRDWSF would remain in the upper part of the soil column, a maximum sampling depth of 0.61 meter is adequate.

A precleaned, hand-operated soil auger will be placed at each sampling location, and soil/gravel will be removed to a total depth of 0.61 meter. If access to the sampling location is restricted, a small shovel or trowel will be used. Samples from the hole will be placed immediately in a laboratory-prepared sample container to minimize loss of volatiles and will be stored on ice in a cooler at 4°C $\pm$2°C). A description of the procedure to be used for decontaminating the soil auger, as well as all sampling equipment, is located in Appendix 11B. The equipment will be cleaned before use at each sample location.

Excess soil that is removed from each hole will be containerized in a U.S. Department of Transportation-approved container until results of the soil analyses are received. The container will be stored at the 616 NRDWSF until designated according to procedures. Each hole in the floor or pad will be sealed with grout after sampling is completed.

The soil samples will be analyzed for the constituents identified in the core samples. The analyses will follow the protocol outlined in SW-846 (EPA 1986). If contamination is detected, soil will be excavated to the determined depth of contamination. This approach assumes a decreasing

concentration with depth, characteristic of a surface spill or leak such as those from the trenches and sumps. A verification sample will be taken after soil removal is complete. This sample will be taken at the surface. Further removal will be performed at 0.3-meter increments until verification samples demonstrate that contamination above background levels has been removed.

Metal gratings over the trenches and sumps will be steam cleaned with low-volume, high-pressure steam in conjunction with a detergent wash. For disposal purposes, the rinsate from the steam cleaning will be collected and analyzed for the dangerous waste stored in the 616 NRDWSF. The metal grates will be wipe sampled to verify that decontamination is adequate. Analyses will proceed according to the protocol outlined in SW-846 (EPA 1986). As with decontamination of other equipment, decontamination will continue until the grate wipe sample analyses show no detectable levels of constituents.

**11.1.4.4.3 Loading Pads and Surrounding Soils.** Although the concrete loading pad at the east end of the storage building is the primary pad used for waste acceptance, both the north and east loading pads will be sampled. Because the loading pads are similar in size and shape, the same sampling scheme will be used for both. The concrete loading areas have been sealed, but because of the potential for contamination, the loading areas will be core sampled. The loading pads and soil immediately surrounding the pads will be sampled at locations randomly selected on a 1-meter by 1-meter grid. Six random samples will be taken on the north pad and six random samples will be taken on the east pad. This represents a 5 percent coverage of the pads and soil. Sample locations are noted in Figure 11-5.

Concrete cores will be taken as described for the concrete floor. Once the concrete core is cut, the core will be withdrawn and protected from cross-contamination. A laboratory will perform analyses on the core samples in accordance with the procedures defined in Table 11-1. Core samples will be taken to determine whether or not penetration of the sealant by regulated constituents has occurred. The core samples will be analyzed for the constituents historically received at the 616 NRDWSF. After sampling is completed, the holes created by the core sampling will be filled with grout.

The trenches on the loading pads will be cored in the same manner as those in the storage building. One random sample will be taken along with another sample at the deepest part of the trench (Figure 11-4).

If dangerous constituents have penetrated the concrete (as determined by core analyses), the pads and trenches will be removed, placed in a containment module, and disposed of as dangerous waste, based on the results of the designating sample(s). The soil underneath, if necessary, and along the side of the loading pad will be sampled at the surface, at a 0.3-meter depth and at a 0.6-meter depth in the same locations as the initial samples. Soil samples will be placed in sample bottles appropriate for the type of analyses to be performed. Soil samples will be analyzed for the contaminants identified in the core samples. Samples will be analyzed in accordance with protocols outlined in SW-846 (EPA 1986).

If the soil samples are determined to be contaminated, when compared to the soil background levels (Section 11.1.1.2), the soil will be removed from the loading area(s) to the depth of contamination noted in the soil samples. Some soil removal might be necessary along the sides of the loading pads, even if soil under the loading pads is found not to be contaminated. This approach assumes a decreasing concentration of contaminants with depth-characteristic of surface spills. Pending analyses, contaminated soils will be placed in new open-head U.S. Department of Transportation-approved containers. Following soil removal, surface soil sampling will be repeated at the random locations for verification.

The samples will be analyzed for the contaminants reported in the previous sample analyses. Further removal will take place at 0.3-meter increments until verification samples demonstrate that contamination above background levels has been removed. These analyses will provide verification that contamination has been removed to the standards set forth in Section 11.1.1. Analyses will be conducted according to protocols outlined in SW-846 (EPA 1986). Soil containers will be disposed of based on the analytical results of the designating sample(s).

**11.1.4.4.4 Tile Field and French Drain.** The tile field is used for the disposal of sanitary waste generated at the 616 NRDWSF (Chapter 2.0, Figure 2-4). Although dangerous waste is not handled in areas serviced by the tile field, the tile field will be sampled to verify that no contaminants are present. The tile field will be sampled by taking three equally spaced soil samples across the center line of the tile field at the interface of the native soil and the tile field gravel. Samples will be taken at 0.3-meter and at 0.6-meter depths below the gravel and soil interface. The samples will be analyzed in accordance with SW-846 (EPA 1986). Samples will be compared to background constituent levels. Should any contamination be found, the tile field will be excavated to the depth prescribed by the soil sampling.

The french drain receives effluent from the trenches on the loading pads. The effluent is verified to be free of contamination (Chapter 2.0, Section 2.5.1) before the effluent is released to the french drain. The french drain will be sampled once in the center. As with the tile field, the samples will be completed at the interface of native soil and french drain gravel, at 0.3-meter and at 0.6-meter depths below the gravel and soil interface. Analyses will be conducted in accordance with protocols outlined in SW-846 (EPA 1986). Samples will be compared to background constituent levels. Should any contamination be found, the french drain will be excavated to the depth prescribed by the soil sampling.

**11.1.4.5 Sampling Locations.** Sampling locations have been selected randomly except where authoritative sampling is warranted in areas of potential contamination. Where appropriate, sections of the storage building have been gridded to facilitate the selection and identification of random sample locations. The use of a random-sampling strategy will ensure that data obtained will be representative of the population from which the samples were taken. Areas of potential contamination were selected for authoritative sampling because of the higher potential for contamination. The number and location of each type of sample is presented in Table 11-2. Random number

table is included in Appendix 11A for each area to be sampled. The following sections discuss the sample locations.

**11.1.4.5.1 Concrete Floor.** The following describes the sampling locations for the concrete cell floors.

**Packaging material and handling equipment area**--The sampling locations for the packaging and handling equipment area sump are shown in Figure 11-4 (sheet 1). Two locations will be sampled.

**Packaging and sampling room**--The sampling locations for the packaging and sampling room sump are shown in Figure 11-4 (sheet 1). Two locations will be sampled.

**Caustic cell**--The sampling locations for the caustic cell trench are shown in Figure 11-4 (sheet 2). Two locations will be sampled.

**Oxidizer cell**--The sampling locations for the oxidizer cell trench are shown in Figure 11-4 (sheet 2). Two locations will be sampled.

**Acid cell**--The sampling locations for the acid cell trench are shown in Figure 11-4 (sheet 2). Two locations will be sampled.

**Combustible cell**--The sampling locations for the combustible cell trench are shown in Figure 11-4 (sheet 2). Two locations will be sampled.

**Flammable 1A cell**--The sampling locations for the flammable 1A cell trench are shown in Figure 11-4 (sheet 2). Two locations will be sampled.

**Flammable 1B cell**--The sampling locations for the flammable 1B cell trench are shown in Figure 11-4 (sheet 2). Two locations will be sampled.

**Receiving area**--The sampling locations for the receiving area trench are shown in Figure 11-4 (sheet 3). Two locations will be sampled.

**Walkway between caustic and oxidizer cell**--The sampling locations for the walkway trench between the caustic and oxidizer cell are shown in Figure 11-4 (sheet 3). Two locations will be sampled.

**Walkway between acid and combustible cell**--The sampling locations for the walkway trench between the acid and combustible cell are shown in Figure 11-4 (sheet 3). Two locations will be sampled.

**Walkway between flammable 1A and 1B cells**--The sampling locations for the walkway trench between the flammable 1A and 1B cell are shown in Figure 11-4 (sheet 3). Two locations will be sampled.

**11.1.4.5.2 Loading Pad Trenches.** Sampling locations for the loading pad trenches are shown in Figure 11-4 (sheet 3). A total of four locations will be sampled (two on the north pad and two on the east pad).

**11.1.4.5.3 Loading Pads and Surrounding Soils.** Sampling locations for the loading pads and surrounding soil are shown on Figure 11-5. A total of 12 locations will be sampled (six on the north pad and six on the east pad).

**11.1.4.5.4 Tile Field and French Drain.** The sample locations for the tile field and french drain are shown on Figure 11-6. Four locations will be sampled (three at the tile field and one at the french drain).

**11.1.4.6 Evaluation of Data.** After receiving the analytical results, the data will be judged for reliability, reviewed, and summarized to eliminate constituents whose results are below detection limits (making the data more manageable). The data will be statistically evaluated according to procedures described in Appendix 11B. Data from the 616 NRDWSF sampling will be evaluated and summarized by the following methodology:

- Evaluate the quality control of the sample handling and sample analyses to assess the reliability of the data
- Examine the analytical data according to guidance provided in *Statistical Analysis of Ground Water Monitoring Data at RCRA Facilities, Interim Final Guidance* (EPA 1989)
- Prepare summary statistics for constituents
- Test the significance of the location effects of analytical results using the analysis of variance procedure
- Have qualified personnel evaluate and interpret data
- Compare the sample results to the action levels.

**11.1.4.7 Statistical Treatment of Data.** All data collected will be analyzed and tabulated for evaluation using the methods described in SW-846 (EPA 1986). Other guidance documents and statistical references could be used where applicable [e.g., Barth and Mason 1984, and *Statistical Analysis of Ground Water Monitoring Data at RCRA Facilities, Interim Final Guidance* (EPA 1989)]. Laboratory data will be provided to Ecology on completion of sampling and analyses. Data for individual constituents will be summarized and will include the following information:

- Number of less than detection-limit values
- Total number of values
- Mean values
- Standard deviation
- Coefficient of variation
- Method detection limit values
- Quantitation limit values
- Representative method precision
- Minimum value
- Maximum value.

The data will be interpreted by qualified scientists and statisticians. The technical bases for establishing the local background threshold concentrations, the methods by which significant deviation from local background will be determined, and the appropriate sample sizes (i.e., numbers) are discussed in the General Information Portion, DOE/RL-91-28, Chapter 11.0. Specific approaches, and the criteria and assumptions implicit in establishing concentration levels (levels that constitute significant deviation from local background or other control levels), as well as the numbers of samples, etc., will be related to Ecology when these factors have been resolved. Data evaluation will be based on statistical criteria and professional judgment as appropriate.

**11.1.4.8 Assessment of Data Reliability.** Data reliability will be assessed by evaluating the sample handling and analysis quality control according to procedures described in Appendix 11B. Sample handling quality control will be evaluated by reviewing field documentation and results of quality assurance samples to establish that sampling error was minimized. The review will be conducted to verify that decontaminated equipment was used, that cross-contamination was minimized, that samples were preserved properly, and that sample chain of custody was not broken.

Analytical data received from any sampling performed at the 616 NRDWSF will be scrutinized against the quality control report provided by the contractor laboratory to assess the reliability of the results. Both organic and inorganic chemical analytical results will be checked, as follows:

- Inorganic chemical analysis laboratory assessment

  - Holding times are acceptable
  - Contractor's detection limits are below those required by the EPA
  - Laboratory blanks and replicates are within established quality control limits
  - Sample spike recoveries are within quality control limits.

- Organic chemical analysis laboratory assessment

  - Holding times are acceptable
  - Instrument detection limits, blank recoveries, surrogate recoveries, and spike recoveries are within the EPA established quality control limits.

**11.1.4.9 Reporting.** After completion of the sampling effort, verification documents will be provided for actual sample locations, number of samples, and specific methods used for collection, if different from those provided in this waste sampling and analysis plan. Data received from the laboratory will be reviewed, analyzed, and summarized statistically. The results will be used to provide further closure evaluations.

**11.1.4.10 Sampling Equipment, Containers, and Preservation.** Sampling equipment, containers, and preservation methods are discussed in the following sections.

**11.1.4.10.1 Sampling Equipment.** Sampling equipment to be used will be appropriate to the spectrum of media that might be encountered. The media to be sampled will consist of concrete and soil. The following are examples of the types of sampling equipment that could be used during the various sampling phases:

- Concrete
  - Coring device
  - Saw for obtaining chip samples

- Soils and gravel
  - Auger
  - Split spoon
  - Trowel
  - Scoop
  - Shovel.

If site conditions permit, an auger and split spoon will be used to collect soil and gravel samples. Otherwise, a trowel, scoop, or shovel will be used. The sampling equipment should be constructed of stainless steel or should have liners constructed of inert materials.

Additional equipment and supplies will be procured as required to perform the necessary sampling. Equipment could include, but not be limited to, the following items:

- Bore or wire brushes
- Stainless-steel mixing bowls
- Sized, heavy-duty plastic bags
- Stainless-steel spatulas, scoops, and spoons
- Adhesive tape
- 30-meter steel tape, 3.7-meter steel tape
- Compass
- Indelible marking pens or pencils
- Hammer and/or sledgehammer
- Ice chests and ice
- Security tape, flagging
- Gloves (of material suitable for anticipated hazards)
- Field radio
- Rags
- Appropriate drawings and maps
- Tags
- Plastic sheeting
- Water containers
- Extra glass and plastic bottles (in case of breakage or contamination)
- Industrial-size shop vacuum
- Teflon* sheets.

---

* Teflon is a trademark of E.I. DuPont de Nemours & Company, Incorporated.

**11.1.4.10.2 Sample Containers and Preservation.** Sample containers will be chosen based on compatibility with the samples, resistance to leaking or breakage, ability to seal tightly, and capacity to hold the required volume for an optimum sample. Containers for collecting and sorting samples will be made of high-density plastic or glass appropriate for the constituents to be analyzed. The containers will have tight, screw-type lids with Teflon cap liners for glass bottles.

All samples will be packaged according to the procedure described in Appendix 11B, placed in an ice chest, and cooled to 4°C ±2°C immediately after collection. A description of the soil and sediment sample containers to be used is located in Appendix 11B. Samples will be transported to the analytical laboratory within 24 hours of collection. All deviations from SW-846 (EPA 1986) protocols, including sample size, will be documented with a justification for the deviation.

**11.1.4.11 Sampling Quality Control.** The required quality control procedures will be followed to the extent necessary to adequately control sampling activities. The various quality control procedures are described in the following sections.

**11.1.4.11.1 Data Quality.** To ensure quality data, all of the sampling procedures will be conducted in conformance with procedures described in Appendix 11B. All laboratory analyses will be performed in accordance with standard EPA methods described in the most recent edition of SW-846. The analytical laboratory will submit all analytical and quality assurance and quality control procedures to the contractor for approval before samples are analyzed. The EPA guidelines for reporting accuracy, precision, and practical quantitation limit specified in the analytical methods will be met.

Quality control of sampling will be ensured through the use of field duplicates, equipment blanks, and field blanks. Quality control of records and documentation will be accomplished by following procedures described in Appendix 11B.

Sampling records to be kept on file include field notes, daily memoranda, records of meetings and activities concerning the sampling program, and chain-of-custody records. In addition, quality control will be implemented through the recording of field memoranda and field notes. Before sampling begins, a quality assurance project plan for sampling and analysis at the 616 NRDWSF will prepared.

**11.1.4.11.2 Field Quality Control.** Field quality control will be accomplished through the use of various sampling duplicates and blanks, as described in the following paragraphs.

Field duplicate samples will be taken for concrete and underlying soils. Duplicate samples are two separate samples collected from the same sampling point and placed into separate containers. The duplicates will be used as an indication of the repeatability of the analytical data.

Equipment blanks will serve as a check on sampling device cleanliness. An equipment blank will be composed of distilled water, which will be transported to the site, opened in the field, poured over or through the sample collection device, collected in a sample container, and returned to the laboratory for analysis. These samples will be collected daily.

If appropriate, trip blanks will be used to identify any possible contamination originating from container preparation methods. Trip blanks will consist of pure deionized, distilled water in a clean sample container, which will accompany each batch of containers shipped to the field. Trip blanks will be returned unopened to the laboratory for analysis.

Field blanks will consist of pure deionized, distilled water that is transferred to a sample container at the site and preserved with the reagent specified for the analyses of interest. Field blanks will be used to check for possible contamination originating with the reagent or the sampling environment and will be collected daily.

**11.1.4.11.3 Field Logbook.** The personnel conducting sampling will maintain an official logbook during sampling activities, as described in Appendix 11B. The book will be bound and will have consecutively numbered pages. All information pertinent to the sampling must be recorded in the logbook in a legible fashion. If changes are necessary, changes will be indicated by a single line drawn through the affected text. The individual responsible for the change will initial and date the entry. Each day's activities or separate sampling episodes must be signed. The logbook will be protected, stored in a safe file or other repository, and retained as a permanent record.

The following types of information will be included in the logbook:

- Site map, sketch, drawing, or other definitive site description
- Locations of all sampling points, including reference points and scale
- Sample method
- Date and time of collection
- Collector's name
- Number, type, and volume of samples taken
- Identification number for each sample
- Field observations (weather conditions, temperature, wind, wetness, and appearance of sample, etc.)
- Laboratory of destination
- Signature of recording personnel.

The following items can be included:

- Name and address of field contact
- Type and/or purpose of sampling
- Sample transportation method
- Photographs of site for field conditions and site location verification.

**11.1.4.11.4 Sample Labels.** Labels will be attached securely to each sample to prevent misidentification. Labels will be in the form of adhesive labels or tags and will be affixed to the proper sample containers before or at the time of collection. All information will be completed at the time of collection. Indelible pencil or ink must be used. Each label will contain at least the following information:

- Site contractor
- Collector's name
- Date and time collected
- Sample number.

**11.1.4.11.5 Sample Seals.** Sample seals will be used to prevent and/or detect tampering with samples between the time of collection and the beginning of analysis. Seals will be applied to the sample containers before the containers leave the sample location. The seals will be attached so the seal must be broken to open the container.

**11.1.4.11.6 Chain-of-Custody Records.** To ensure the integrity of the samples from collection through analysis to final disposition, documentation will be used to trace sample possession and handling. This documentation will provide a history of personnel having custody of the sample.

A chain-of-custody record will be completed and will accompany all samples from collection to analysis. Multiple copies will be required, and at least one copy will be maintained by the sampling supervisor. The following information will be included:

- Contractor
- Sample numbers
- Date and time collected
- Sample type
- Number of containers
- Collector's signature
- Signature of person receiving possession
- Inclusive dates of possession
- Condition of samples on receipt.

A description of the chain-of-custody procedure to be used is located in Appendix 11B.

**11.1.4.11.7 Sample Analysis Request.** The sample analysis request form is designed to accompany the samples to the laboratory and to designate the analyses to be performed on each sample. This form also provides a check to ensure that all samples have been received and that correlation between sample analysis and sample number is finalized and complete. The form includes the following information:

- Contractor
- Company contact
- Collector
- Sample number
- Sample type
- Analysis requested
- Data and time collected
- Laboratory sample custodian.

A description of the soil and sediment sampling procedure and chain-of-custody procedure to be used is located in Appendix 11B.

**11.1.4.11.8 Laboratory Receipt and Logging of Sample.** In the laboratory, a sample custodian will be assigned to receive the samples. On receipt of a sample, the custodian will inspect the condition of the sample and the sample seal, verify the information on the sample label and seal against that on the chain-of-custody record, assign a laboratory number, log in the sample in the laboratory logbook, and store the sample in a secured sample storage room or cabinet. Missing or damaged samples will be reported immediately.

**11.1.4.11.9 Laboratory Quality Control.** The contractor laboratory will ensure the integrity and validity of test results through implementation of an internal quality control program. The program will meet the quality control criteria of SW-846 (EPA 1986). A system of reviewing and analyzing the results of these samples will be maintained to detect problems caused by contamination, inadequate calibrations, miscalculations, improper procedures, or other factors. Standard methods will be used and alternative methods that are developed or adapted will be tested and completely documented. All methods and method changes will be approved by a contractor contracts representative.

The quality control procedures for hazardous chemical analyses will include [as appropriate to each analysis and as specified in Section 1.2 of SW-846 (EPA 1986)] evaluation of blanks, random matrix spikes (for 10 percent of the samples), internal standards, surrogates, and standard calibration curves. Spikes will be added in amounts comparable to the amount of analyte present in the sample. The quality control procedures specific to individual methods will be detailed in the laboratory's documented analytical procedures and will be included with each batch of samples analyzed.

**11.1.4.11.10 Sample Disposition.** At the completion of all analyses, the samples will be returned to the collector. In no case will the samples be retained longer than 3 years unless specifically designated by the cognizant engineer.

**11.1.4.11.11 Equipment Decontamination.** Extreme care is necessary in field sampling to ensure that there is no cross-contamination of samples by sampling equipment. To prevent this source of contamination, freshly cleaned or disposable sampling tools will be used. When equipment must be reused in the field, it will be cleaned as thoroughly as practical as described in Appendix 11B.

**11.1.4.11.12 Sampling Container Decontamination Procedures.** Containers will be purchased precleaned from the factory and maintained under strict chain of custody to preserve the integrity of the samples from collection through disposal. After analysis, sample containers will be disposed of.

**11.1.4.12 Analytical Procedures.** Analyses of all constituents will be performed by the laboratory in accordance with procedures identified in SW-846 (EPA 1986).

**11.1.4.13 Contamination Control.** Excess sample material will be containerized in a preconditioned 17-H open-headed 208-liter container. Rinse water also will be containerized. In accordance with WAC 173-303-200(2) and the procedure described in Appendix 11B, the 208-liter containers will be stored in a designated area at the dangerous waste site until each container is full. When the container is full, the contents will be tested for dangerous waste. If the contents are found to be dangerous, arrangements will be made for proper disposal of the material. The disposal will take place within a 90-day period after a container is full. If dangerous contamination is not found, materials will be laundered or disposed of according to onsite procedures that meet all applicable federal, state, and U.S. Department of Energy regulations. Containers for storage will be properly marked.

**11.1.4.14 Decontamination of Equipment Used for Closure.** The equipment used during the closure activities will be cleaned three times with a steam cleaner. The rinsate from steam cleaning will be collected, pumped into new bung-type 208-liter containers, and sampled. The pump will be flushed three times with water, which will be managed as rinsate. Rinsate will be managed in accordance with Section 11.1.3.1.

**11.1.4.15 Removal of Contaminated Material and Waste Residues.** Waste remaining in the storage building and in the outside storage areas at the commencement of closure activities will be removed. General housekeeping cleanup procedures will be followed to remove any remaining waste residues.

**11.1.4.16 Restoration.** On removal of waste residues and contaminated structures or soil, the site might require some degree of reclamation. Reclamation would be justified to control dust, erosion, and surface water run-off, and to promote postclosure usage. Site restoration will include backfilling disturbed soil areas with noncontaminated native soil, compaction, grading, and revegetation.

**11.1.4.17 Modifications to the Waste Sampling and Analysis Plan.** Modification of the sampling plan could be necessary because of unanticipated or changing conditions. Factors adversely influencing sampling efforts can include equipment malfunction or breakdown, improper equipment, and physical

barriers to coring equipment. When changes to the planned activity are necessary, the changes will be recorded in the field logbook along with circumstances requiring the action. The field logbook will be reviewed and signed daily by the project manager, as described in Appendix 11B. This procedure will provide an accurate record of changes and will allow sampling to proceed safely while maintaining efficient manpower and equipment use. Any deviation from procedures used during closure will be handled in accordance with the procedure described in Appendix 11B. In addition, any changes to the closure plan will be in accordance with the protocol established in the *Hanford Facility Dangerous Waste Permit Application* (DOE-RL 1991).

## 11.2 SCHEDULE FOR CLOSURE [I-1f]

A schedule of the closure activities is presented in Figure 11-7. Closure will be completed 180 days after the last shipment of waste is received at the 616 NRDWSF [WAC 173-303-610(4)(b)]. The activities representing the greatest portion of time will be the sampling and decontamination iteration of the floor and the loading areas. At this time, an estimate of 90 days is given for these tasks. This estimate assumes a rapid turnaround time of 10 working days or less for laboratory analyses. However, it is unknown how many iterations of decontamination will be required or if any will be required at all.

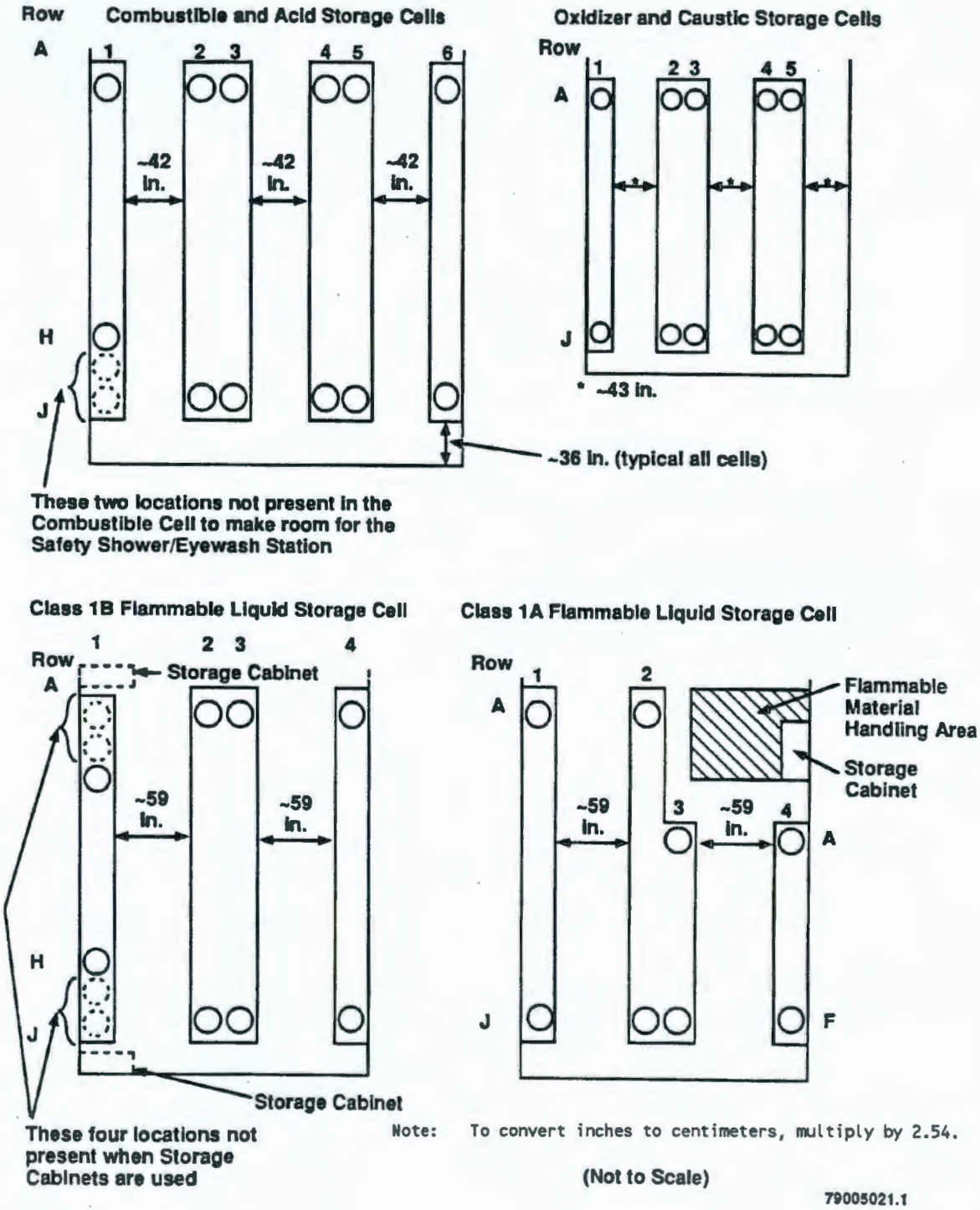


Figure 11-1. Configuration and Layout of a Typical Cell.

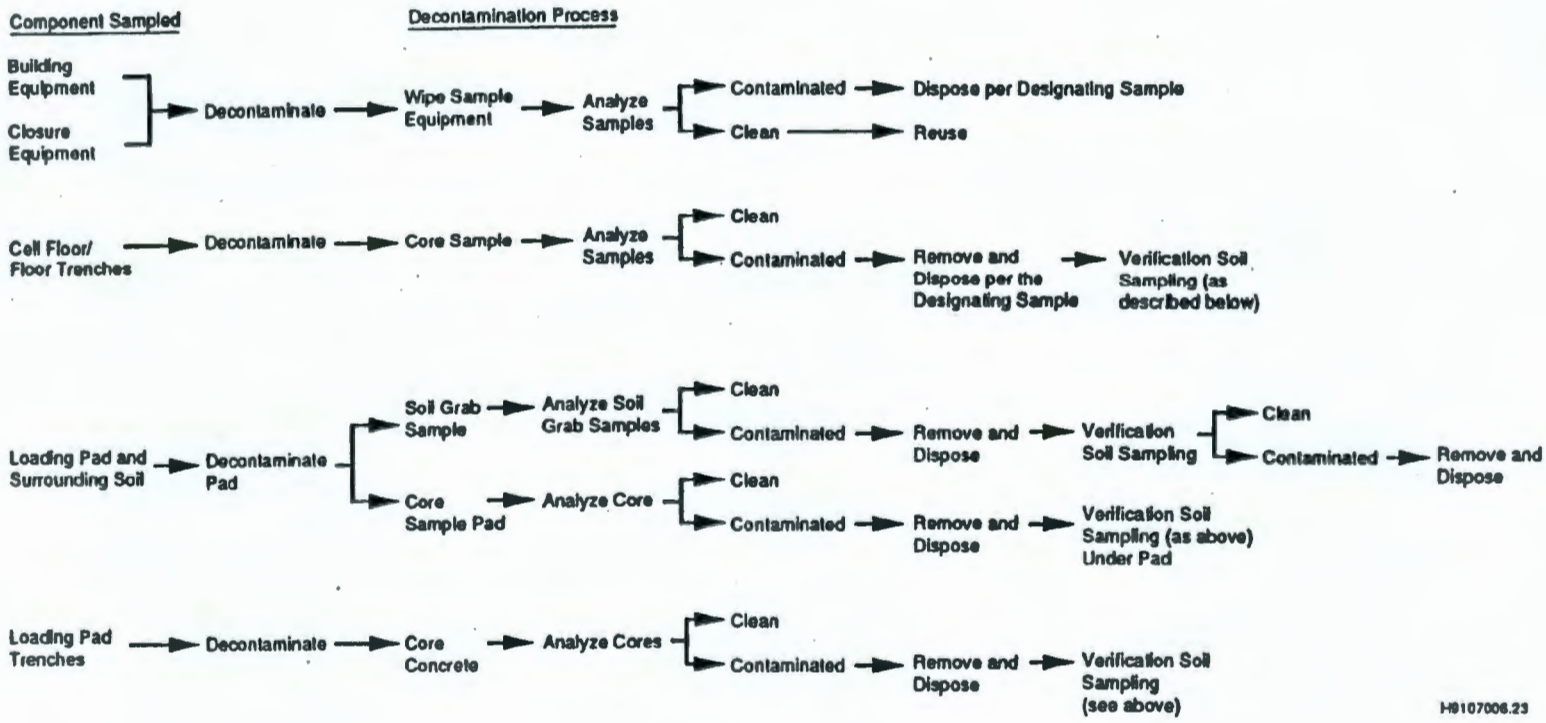


Figure 11-2. Sampling Flow Path.

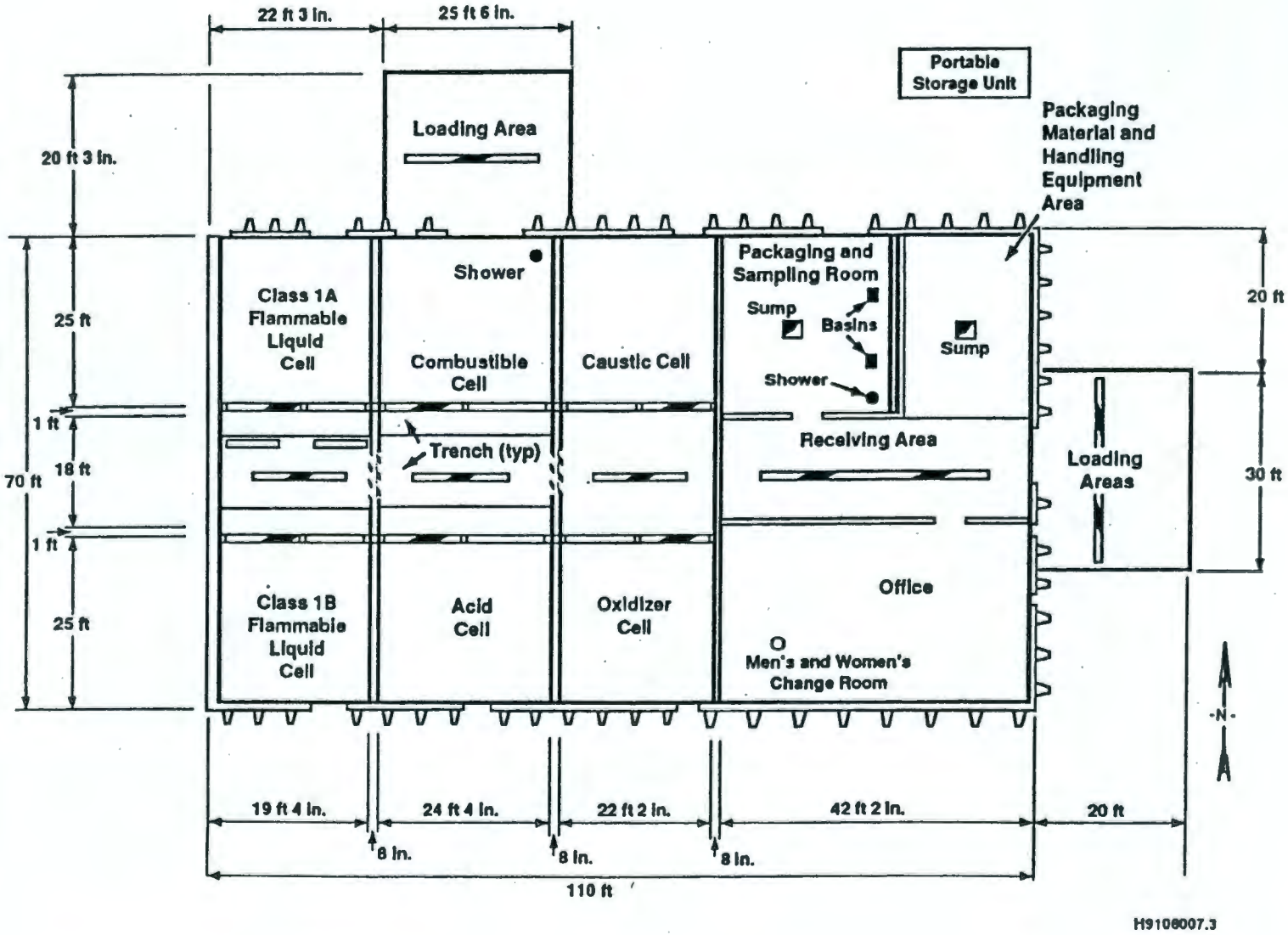


Figure 11-3. Floor Plan of the 616 Nonradioactive Dangerous Waste Storage Facility Showing Locations of the Trenches, Sumps, Water Lines, Basins, and Safety Showers.

Note: To convert feet to meters, multiply by 0.3048.
To convert inches to centimeters, multiply by 2.54.

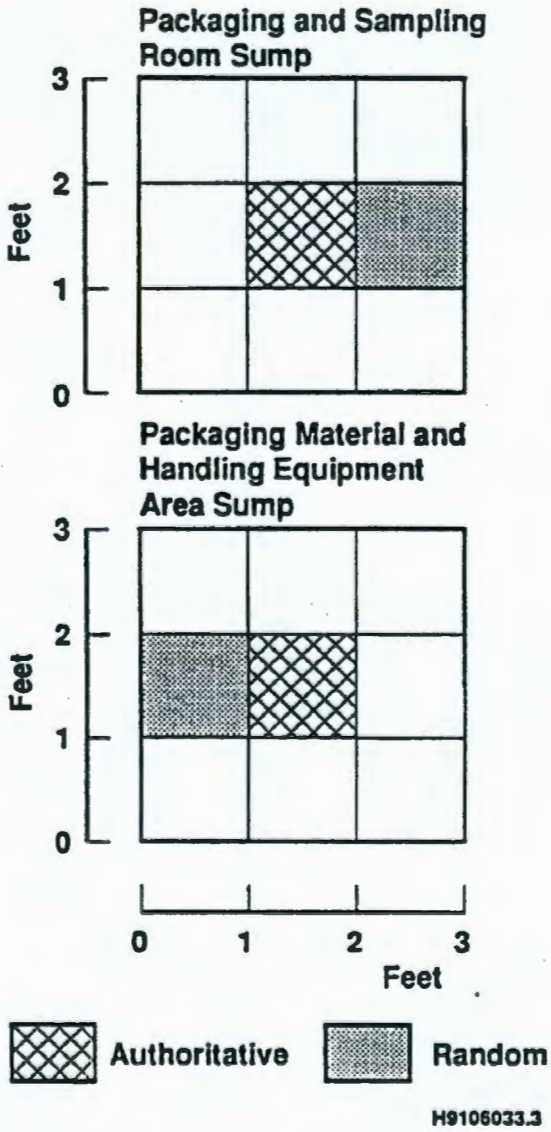


Note: To convert feet to meters, multiply by 0.3048.

Figure 11-4. Trench and Sump Sample Locations. (sheet 1 of 3)

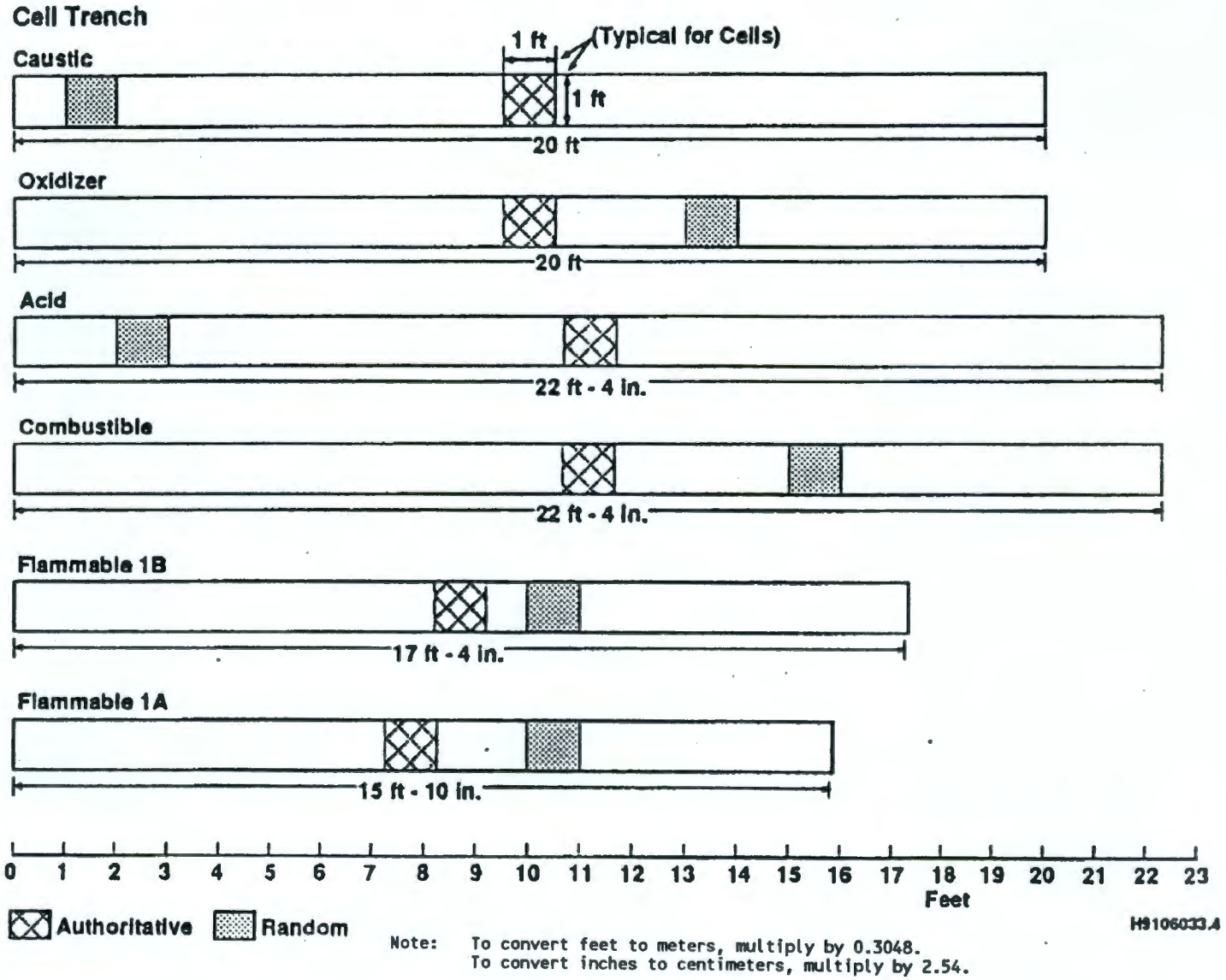


Figure 11-4. Trench and Sump Sample Locations. (sheet 2 of 3)

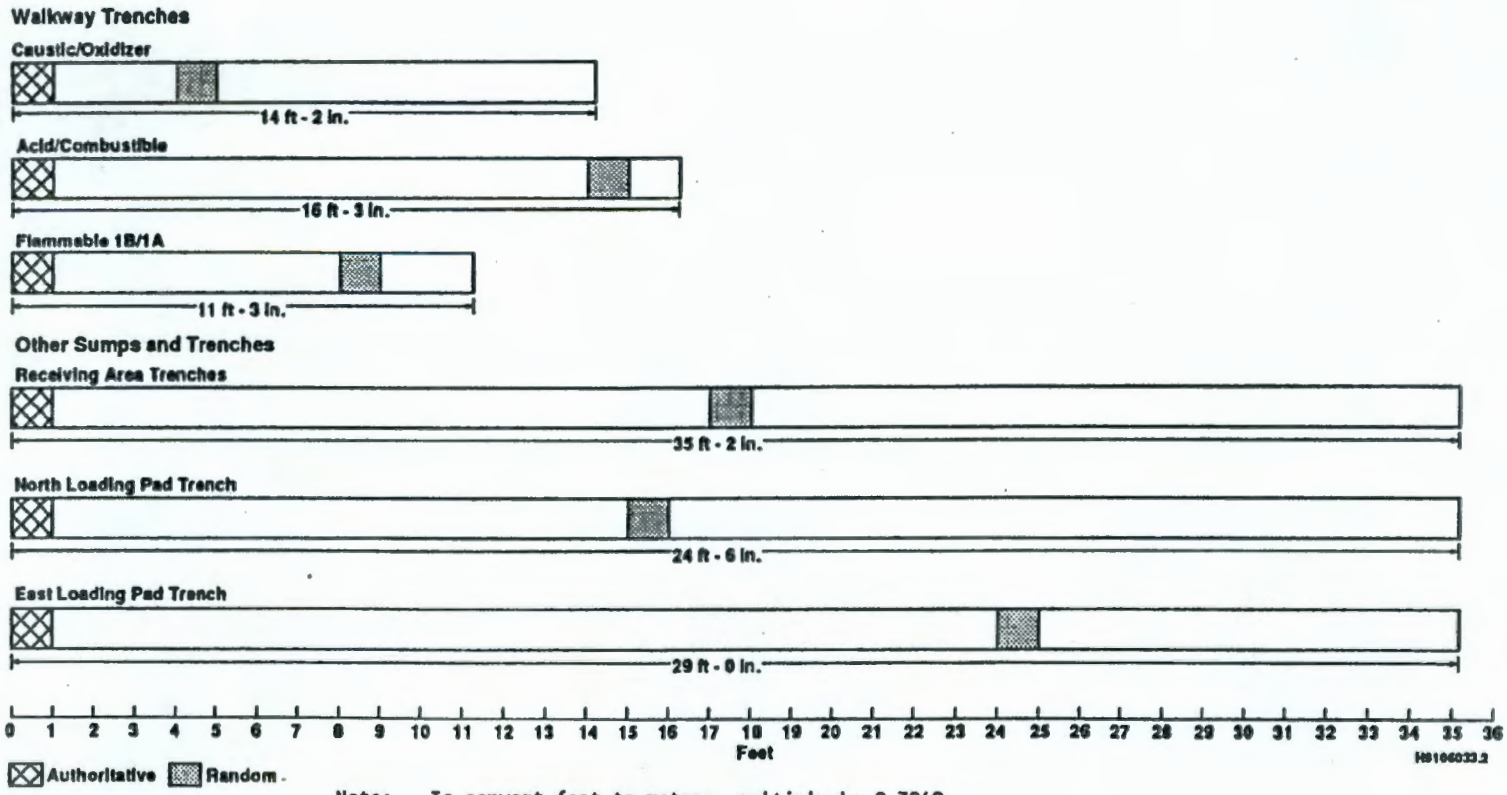


Note: To convert feet to meters, multiply by 0.3048.
To convert inches to centimeters, multiply by 2.54.

Figure 11-4. Trench and Sump Sample Locations. (sheet 3 of 3)

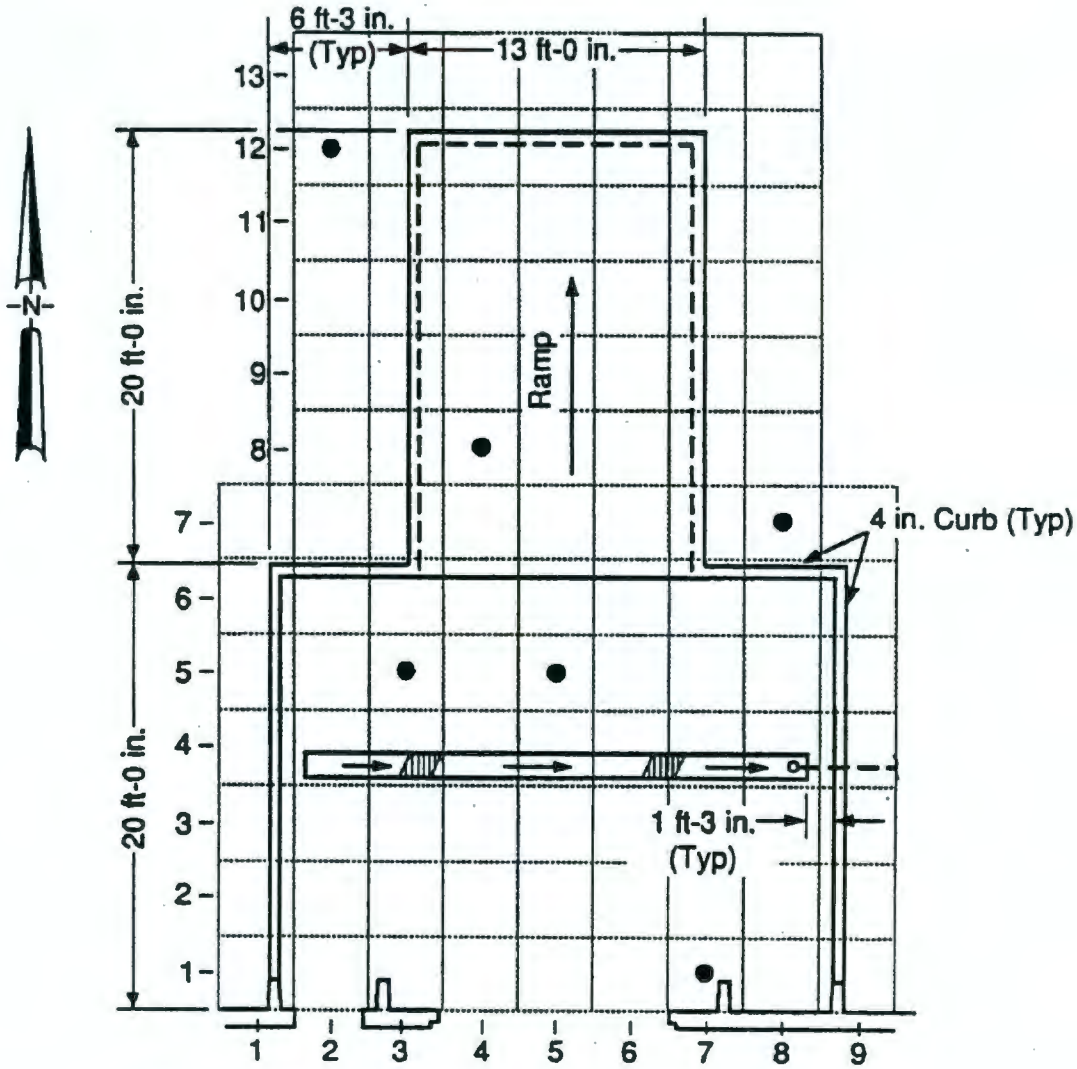


Note: To convert feet to meters, multiply by 0.3048.
To convert inches to centimeters, multiply by 2.54.

Figure 11-5. Loading Pad Sample Locations. (sheet 1 of 2)

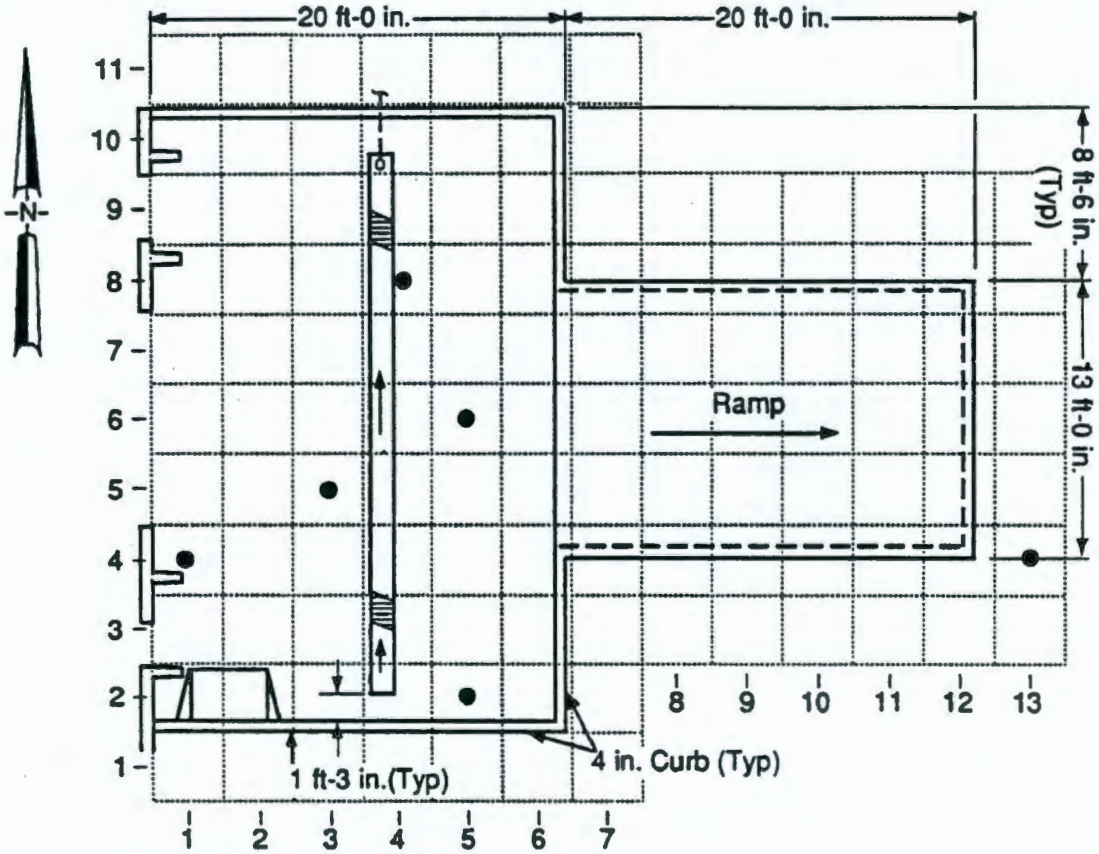


East Loading Pad Sample Points
● Sample Location
Scale: 1 inch (2.5 centimeters) = 9.41 feet (2.86 meters)
—1 Meter Gridding

H9108020.2

Note: To convert feet to meters, multiply by 0.3048.
To convert inches to centimeters, multiply by 2.54.

Figure 11-5. Loading Pad Sample Locations. (sheet 2 of 2)

**A. French Drain Sample Location**

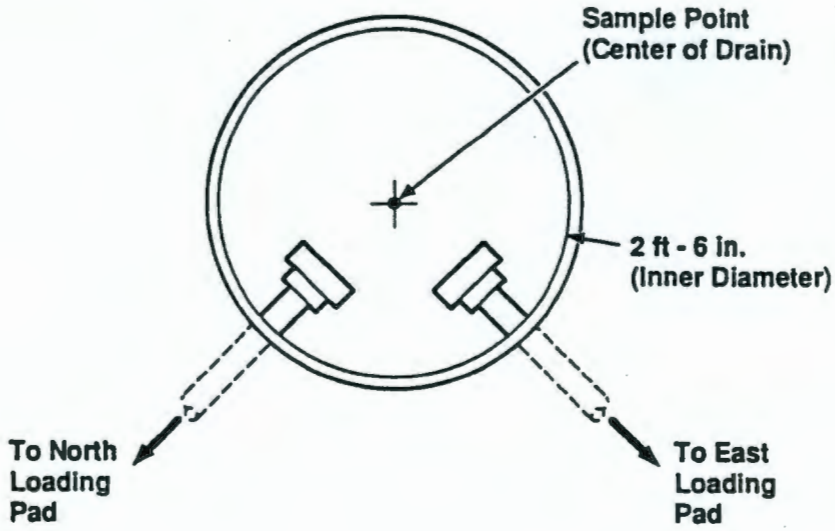


**B. Tile Field Sample Location**

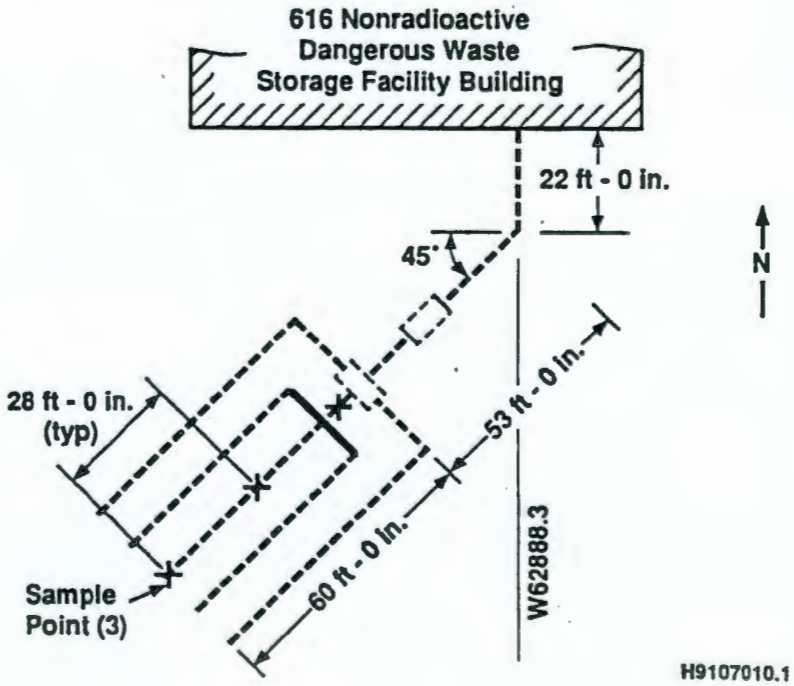


Note: To convert feet to meters, multiply by 0.3048.
To convert inches to centimeters, multiply by 2.54.

Figure 11-6. Tile Field and French Drain Sample Location.

| Activity | Day<br>0 20 40 60 80 100 120 140 160 180 |
|---|---|
| Initial storage building decontamination | |
| Rinsate analysis | |
| Determination of the need for further sampling and decontamination | |
| Sampling and decontamination of floor and loading area | |
| Soil sampling and soil excavation, if necessary | |
| Site restoration | |

Figure 11-7. Schedule for Closure Activities.

Table 11-1. Concrete Analysis.

| Possible contaminant | Preparation method | Extract method | Analysis method | Initial action level | Second action level |
|---|---|---|---|---|---|
| Inorganic | None | TCLP[a] (3050) | SW 846 6010 AA | Level of quantitation | HB[b] |
| Organic | | Thermal desorption | Gas chromatograph | Level of quantitation | HB[b] |

[a]TCLP = toxicity characteristics leaching procedure.
[b]HB = health based.

In addition to the analyses in Table 11-1, the concrete samples also will be analyzed for all dangerous waste constituents documented to have been spilled at the 616 NRDWSF during its operating life. These analyses will be performed in accordance with WAC 173-303-110 including the quality assurance and quality control requirements delineated in SW-846. Action levels will be based on the level of quantitation for each analyte. Final decisions based on health based standards will be subject to approval or rejection by Ecology.

Table 11-2. 616 Nonradioactive Dangerous Waste Storage Facility Sample Location Summary.

| Location | Number of sampling locations |
|---|---|
| Local background samples | |
| Soil samples | |
| Random | 5 |
| Sump samples | |
| Authoritative | 2 |
| Random | 2 |
| Cell trench samples | |
| Authoritative | 6 |
| Random | 6 |
| Walkway trench samples | |
| Authoritative | 3 |
| Random | 3 |
| Other trench samples | |
| Receiving walkway trench | |
| Authoritative | 1 |
| Random | 1 |
| North loading pad trench | |
| Authoritative | 1 |
| Random | 1 |
| East loading pad trench | |
| Authoritative | 1 |
| Random | 1 |
| Tile field | |
| Authoritative | 3 |
| French drain | |
| Authoritative | 1 |
| North loading pad | |
| Random | 6 |
| East loading pad | |
| Random | 6 |

## CONTENTS

12.0 REPORTING AND RECORDKEEPING . . . . . 12-1

This page intentionally left blank.

# 12.0 REPORTING AND RECORDKEEPING

Reporting and recordkeeping requirements that could be applicable to the Hanford Facility are described in Chapter 12.0 of the General Information Portion (DOE/RL-91-28). Not all of these requirements and associated reports and records identified in Chapter 12.0 of the General Information Portion are applicable to the 616 NRDWSF. Those reporting and recordkeeping requirements determined to be applicable to the 616 NRDWSF are summarized as follows:

- Hanford Facility Contingency Plan and incident records (as identified in the General Information Portion):

  - Immediate reporting
  - Written reporting
  - Shipping paper discrepancy reports.

- Unit-specific Part B permit application documentation and associated plans

- Personnel training records

- Inspection records (unit)

- Onsite transportation documentation

- Land disposal restriction records

- Waste minimization and pollution prevention.

In addition, the following reports prepared for the Hanford Facility will contain input, when appropriate, from the 616 NRDWSF:

- Quarterly Hanford Facility RCRA Permit modification report
- Anticipated noncompliance
- Required annual reports.

Annual reports updating projections of anticipated costs for closure and postclosure will be submitted when the 616 NRDWSF closure plan is submitted for Ecology approval (Chapter 11.0).

The 616 NRDWSF Operating Record 'records contact' is kept on file in the General Information file of the Hanford Facility Operating Record (refer to Chapter 12.0, DOE/RL-91-28).

This page intentionally left blank.

## CONTENTS

13.0 OTHER FEDERAL AND STATE LAWS [J] . . . . . 13-1

This page intentionally left blank.

# 13.0 OTHER FEDERAL AND STATE LAWS [J]

Other federal and state laws and local requirements applicable to the 616 NRDWSF (*Toxic Substances Control Act of 1976*, *State Environmental Policy Act of 1971*, *Federal Facilities Compliance Act of 1992*, and the *Federal Insecticide, Fungicide, and Rodenticide Act of 1975*) are discussed in Chapter 13.0 of the General Information Portion (DOE/RL-91-28).

This page intentionally left blank.

## CONTENTS

14.0 PART B CERTIFICATION [K] . . . . . 14-1

This page intentionally left blank.

# 14.0 PART B CERTIFICATION [K]

I certify under penalty of law that this document and all attachments were prepared under my direction or supervision in accordance with a system designed to assure that qualified personnel properly gather and evaluate the information submitted. Based on my inquiry of the person or persons who manage the system, or those persons directly responsible for gathering the information, the information submitted is, to the best of my knowledge and belief, true, accurate, and complete. I am aware that there are significant penalties for submitting false information, including the possibility of fine and imprisonment for knowing violations.

John D. Wagoner — 4/14/97

Owner/Operator
John D. Wagoner, Manager
U.S. Department of Energy
Richland Operations Office

Date

4/10/97

Co-operator
H. J. Hatch,
President and Chief Executive Officer
Fluor Daniel Hanford, Inc.

Date

This page intentionally left blank.

## CONTENTS

15.0 REFERENCES . . . . . 15-1

This page intentionally left blank.

# 15.0 REFERENCES

ASTM, 1982, *Annual Book of ASTM Standards*, Parts 15, 19, and 31, American Society for Testing and Materials, Philadelphia, Pennsylvania.

Barth, D. S., and B. J. Mason, 1984, *Soil Sampling Quality Assurance User's Guide*, EPA-600/14-84-0483, U.S. Environmental Protection Agency, Washington, D.C.

Conway, R.A., 1982, *Environmental Risk Analysis for Chemicals*, Van Nostrand Reinhold Environmental Engineering Series, Van Nostrand Reinhold Company, New York, New York.

DOE-RL, 1985, *RCRA Part B Permit Application - Nonradioactive Dangerous Waste Landfill and Storage Facility*, 89-12, U.S. Department of Energy-Richland Operations Office, Richland, Washington.

DOE/RL-91-28, *Hanford Facility Dangerous Waste Permit Application, General Information Portion*, U.S. Department of Energy, Richland Operations Office, Richland, Washington.

Ecology, 1980, *Biological Testing Methods*, DOE 80-12, revised July 1984, Washington State Department of Ecology, Olympia, Washington.

Ecology, 1982, *Chemical Testing Methods*, WDOE 83-13, revised March 1984, Washington State Department of Ecology, Olympia, Washington.

Ecology, 1994, *Dangerous Waste Portion of the Resource Conservation and Recovery Act Permit*, Number WA7890008967, effective September 28, 1994, Washington State Department of Ecology, Olympia, Washington.

Ecology, 1996, *Dangerous Waste Permit Application Requirements*, Publication Number 95-402, Washington State Department of Ecology, Olympia, Washington.

Ecology, EPA, and DOE-RL, 1996, *Hanford Federal Facility Agreement and Consent Order*, Washington State Department of Ecology, U.S. Environmental Protection Agency, U.S. Department of Energy, Richland Operations Office, Olympia, Washington, amended periodically.

EPA, 1986, *Test Methods for the Evaluation of Solid Waste: Physical/Chemical Methods*, SW-846, 3rd Edition, U.S. Environmental Protection Agency, Washington, D.C.

EPA, 1987, *A Compendium of Superfund Field Operations Methods*, EPA/540/P-87/001, Office of Emergency and Remedial Response, U.S. Environmental Protection Agency, Washington, D.C.

EPA, 1989, *Statistical Analysis of Ground Water Monitoring Data at RCRA Facilities*, Interim Final Guidance, U.S. Environmental Protection Agency, Washington, D.C.

Freeze, R.A. and J.A. Cherry, 1979, *Groundwater*, Prentice-Hall, Inc., Englewood Cliffs, New Jersey.

ICBO, 1990, *Uniform Building Code*, International Congress of Building Officials, Washington, D.C., updated periodically.

NFPA, 1989, *National Fire Codes*, National Fire Protection Association, Quincy, Massachusetts.

NIOSH, 1986, *Registry of Toxic Effects of Chemical Substances*, National Institute for Occupational Safety and Health, Washington, D.C.

OSHA, 1977, "Wipe Sampling Policies and Procedures", *Industrial Hygiene Manual*, Chapter IV, U.S. Department of Labor, Washington, D.C.

Pendias, A. and H. Pendias, 1984, *Trace Elements in Soils and Plants*, CRC Press, Inc., Boca Raton, Florida.

Routson, R.C. and K.R. Fecht, 1979, *Soil (Sediment) Properties of Twelve Hanford Wells, With Geologic Interpretation*, RHO-LD-82, Rockwell Hanford Operations, Richland, Washington.

Sax, N. Irving, 1984, *Dangerous Properties of Industrial Materials*, Van Nostrand Reinhold Company, New York, New York.

Sax, N. Irving and Richard J. Lewis, Sr., 1987, *Hawley's Condensed Chemical Dictionary*, Van Nostrand Reinhold Company, New York, New York.

WHC, 1991, *Characterization and Use of Soil and Groundwater Background for the Hanford Site*, WHC-MR-0246, Westinghouse Hanford Company, Richland, Washington.

55 FR 61, "U.S. EPA Final Rule," Code of Federal Regulations, *Federal Register*, Vol. 55, No. 61, pp. 11799-11877, March 29, 1990, U.S. Environmental Protection Agency, Washington, D.C.

# APPENDICES

2A TOPOGRAPHIC MAP

3A WASTE ANALYSIS PLAN FOR 616 NONRADIOACTIVE DANGEROUS WASTE STORAGE FACILITY

4A CONSTRUCTION SPECIFICATION

4B DESIGN DRAWINGS

4C CONTAINMENT CALCULATIONS

4D CONCRETE SEALANT PROPERTIES AND PERFORMANCE DATA

7A BUILDING EMERGENCY PLAN - 616 BUILDING

8A TRAINING

11A RANDOM NUMBERS TABLE

11B DESCRIPTION OF PROCEDURES

This page intentionally left blank.

# APPENDIX 2A

# TOPOGRAPHIC MAP

# APPENDIX 2A

## TOPOGRAPHIC MAP

H-13-000014 616 NRDWSF Topographic Map

# APPENDIX 3A

## WASTE ANALYSIS PLAN
## FOR 616 NONRADIOACTIVE DANGEROUS WASTE STORAGE FACILITY

## CONTENTS

1.0 INTRODUCTION . . . . . 1
1.1 PARAMETERS AND RATIONALE . . . . . 3
1.2 TEST METHODS . . . . . 4
1.3 SAMPLING METHODS . . . . . 5
1.4 FREQUENCY OF ANALYSIS . . . . . 6

2.0 ADDITIONAL REQUIREMENTS FOR WASTES GENERATED OFFSITE . . . . . 7

3.0 ADDITIONAL REQUIREMENTS FOR IGNITABLE, REACTIVE, OR INCOMPATIBLE WASTES . . . . . 7
3.1 RESPONSE TO SIGNIFICANT DISCREPANCIES . . . . . 8
3.2 PROVISIONS FOR NONACCEPTANCE OF SHIPMENT . . . . . 9

## FIGURES

1. Waste Control Procedure Description . . . . . F1
2. Typical Treatment, Storage, and/or Disposal Worksheet . . . . . F2
3. Compatibility Chart . . . . . F3

## TABLES

1. Parameters and Rationale for Waste Designation . . . . . T1.1
2. Analytical Methodologies . . . . . T2
3. Sampling Methods and Equipment . . . . . T3

# APPENDIX 3A

## WASTE ANALYSIS PLAN FOR 616 NONRADIOACTIVE DANGEROUS WASTE STORAGE FACILITY

## 1.0 INTRODUCTION

Each onsite generating unit (or group of generating units) has an individual (called the waste coordinator) in charge of waste handling. The waste coordinator is trained in the following areas:

- Waste management
- Sampling practices
- Waste identification
- Waste segregation
- Packaging, labeling, and marking
- Waste tracking form requirements
- Transport
- Waste minimization.

The waste coordinator is responsible for correctly and completely identifying the dangerous constituents of the generating unit's waste and packaging the waste in accordance with 49 CFR 173. The waste coordinator is responsible for the proper management of the waste from the generating unit. The solid waste management staff oversees the activities of waste coordinators.

Before transfer of nonradioactive dangerous waste from a generating unit to the 616 NRDWSF, the waste coordinator secures the waste in a controlled, less than 90-day storage area, satellite accumulation area, CERCLA cleanup site, or expedited response action site. The waste coordinator identifies the waste from accumulation records and/or product label information. The waste coordinator assembles the waste information, which consists of associated sample analysis records and/or manufacturer's data (material safety data sheets) (Sections 1.2 and 1.3). Material recovered from a nonpermitted leak or spill is characterized by identifying the source. If the source cannot be found or additional unknown waste is suspected, the material is completely analyzed using a methodology presented in Section 1.2. Actions to be taken in response to a spill or discharge are detailed in Appendix 7A.

The waste coordinator prepares a waste storage/disposal request and attaches all necessary information in preparation for waste designation (in accordance with WAC 173-303-070). The waste storage/disposal request is sent to solid waste management where trained designators perform a waste designation.

Figure 1 describes the control procedures established by solid waste management for ensuring that waste is designated properly. Based on waste

identification information provided by the waste coordinator, the solid waste management staff designates the waste in accordance with WAC 173-303-070. The designation process also includes determining if the waste is subject to a land disposal restriction as required by 40 CFR 268. Figure 2 presents a worksheet used by the solid waste management staff to perform the waste designation. If the information supplied by the generating unit's waste coordinator is insufficient or the designator suspects the information is incorrect, the waste coordinator is requested to supply additional information. This information can include sample analysis reports (Section 1.3) or additional information from the manufacturer.

After the designation is complete, a peer review is conducted. In the peer review, another trained designator reviews and verifies the designation. Solid waste management performs the final review and approves the designation. If a waste is suspected of being improperly identified, verification sampling of the responsible generating unit's waste will be required as detailed in Section 1.3.

The solid waste management staff makes a final evaluation of waste disposition only after waste characterization is complete and the proper waste designation is made. On completion of the above evaluation, a hazardous waste disposal analysis record is prepared by the solid waste management staff. This letter identifies which materials are regulated and which materials are not regulated. The hazardous waste disposal analysis record provides the following information:

- The appropriate waste designation per WAC 173-303-070
- Land ban disposal restrictions per 40 CFR 268
- Packaging, marking, and labeling instructions
- Waste tracking requirements
- Compatibility groups (Figure 3)
- Transport contact
- Treatment, storage, and/or disposal unit contact
- Identification of a proper storage cell at the 616 NRDWSF.

The hazardous waste disposal analysis record is sent by the solid waste management staff to the generating unit, the 616 NRDWSF and transportation personnel. The waste coordinator packages the nonradioactive waste and applies appropriate markings and labels in accordance with the hazardous waste disposal analysis record.

The waste coordinator prepares the waste and associated documentation (e.g., waste tracking forms) according to the hazardous waste disposal analysis record. Before transport, a transportation representative reviews the waste tracking forms and each waste package against the hazardous waste disposal analysis record to ensure U.S. Department of Transportation requirements are met. The representative also checks the condition, marking, and labeling of the packages. If discrepancies or deficiencies are found, these are corrected by the waste coordinator before receiving approval for shipment to the 616 NRDWSF. The transportation representative initials the waste tracking form indicating the load is acceptable for transportation to the 616 NRDWSF.

All wastes received at the 616 NRDWSF must be free from any radionuclides generated as the result of DOE-RL operations. The generating unit is required to submit a certification that the waste contains no radionuclides before transferring the waste to the 616 NRDWSF. The 616 NRDWSF personnel do not accept waste without the proper radiation release documentation.

The transporter ensures the waste packages are marked and labeled as indicated by the hazardous waste disposal analysis record and the waste tracking form/Uniform Hazardous Waste Manifest is complete. The transporter verifies that a transportation representative has initialed the waste tracking form/Uniform Hazardous Waste Manifest, checks the condition of the package, and verifies that each container bears a valid radiological release, if applicable (or that one release covers a set of containers). The transporter loads the vehicle, the waste coordinator signs for the generating unit, and the transporter signs the waste tracking form/Uniform Hazardous Waste Manifest. Transporters transport the nonradioactive dangerous waste from the generating unit to the 616 NRDWSF.

At the 616 NRDWSF, nuclear process operators check the waste tracking form/Uniform Hazardous Waste Manifest against the hazardous waste disposal analysis record to verify that the waste tracking form/Uniform Hazardous Waste Manifest is correct, that the transportation representative's initials and the waste coordinator's and the transporter's signatures are present. Nuclear process operators check the condition of the marking, labeling, and the presence of a valid radiological release, if applicable, on each waste package. If the load is accepted, the packages are removed from the vehicle and the packages are stored in the 616 NRDWSF, as indicated on the hazardous waste disposal analysis record. If a discrepancy or deficiency is found, it is handled as detailed in Section 1.3. After the load is accepted, the 616 NRDWSF supervisor (or a delegate) signs the waste tracking form/Uniform Hazardous Waste Manifest as the storage unit operator.

All dangerous waste shipped offsite from the 616 NRDWSF is subject to the verification sampling program of the receiving TSD facility as required by WAC 173-303-300(3).

## 1.1 PARAMETERS AND RATIONALE

The minimum parameters needed for waste designation and the rationale for their selection are presented in Section 1.2 through 1.4 and 3.0. The goal of obtaining this information is to ensure that a proper and complete waste designation is made per WAC 173-303-080 through 103 and 40 CFR 264.13 before acceptance of waste at the 616 NRDWSF. The information also ensures that all hazards of the waste have been identified for the purposes of safe handling and proper waste disposition (including radiological screening). When possible, information on a material is taken from manufacturer information (e.g., material safety data sheets). If this information is not sufficient, analytical testing will be performed. Dangerous waste toxic mixtures (WT01 and WT02) of known chemical content will be designated according to toxicity calculations defined in WAC 173-303-100, which uses

the National Institute for Occupational Safety and Health registry (NIOSH 1986).

## 1.2 TEST METHODS

Before acceptance of waste at 616 NRDWSF, confirmation of designation might be required by solid waste management (Section 1.4). The waste that will undergo confirmation of designation is identified in Section 1.4 and can be divided into two groups; those that easily yield a representative sample (Category I), and those that do not (Category II). The steps for each type are outlined in the following along with a description of which waste falls into each category:

- Category I. If a waste that easily yields a representative sample is received, a representative sample will be taken of the waste. If more than one phase is present, each phase must be tested individually. The following field tests will be performed:

  - Reactivity - HAZCAT[1] oxidizer, cyanide, and sulfide tests. These tests will not be performed on materials known to be organic peroxides, ethers, and/or water reactive compounds.

  - Flashpoint/explosivity - by HAZCAT flammability procedure, explosive atmosphere meter[2], or a closed cup flashpoint measurement instrument[2].

  - pH - by pH meter[2] or pH paper (SW-846-9041).[3] This test will not be performed on non-aqueous materials.

  - Halogenated organic compounds - by Clor-D-Tect[4] kits.

  - Volatile organic compounds - by photo or flame ionization tester[2], by gas chromatography with or without mass spectrometry, or by melting point and/or boiling point determination.

  If the waste meets the parameters specified in its documentation, within a 10% tolerance, confirmation of designation is complete. If it does not meet these parameters, sample and analyze the materials in accordance with WAC 173-303-110. Refer to Table 1 for a list of

---

[1] HAZCAT is a tradename of HazTech Systems, Inc., San Francisco, CA.

[2] These instruments are field calibrated or checked for accuracy daily when in use.

[3] The pH paper must have a distinct color change every 0.5 pH unit and each batch of paper must be calibrated against certified pH buffers or by comparison with a pH meter calibrated with certified pH buffers.

[4] Clor-D-Tect is a tradename of Dexsil Corporation, Hamden, CT.

analytical methodologies and Table 2 for sampling methodologies. This is considered a significant error under Section 1.4. Re-assess and redesignate the waste. Repackage and label as necessary or return to the generating unit.

When mathematically possible, confirmation on an equal number of Category I and Category II containers will be performed.

- Category II. If a representative sample is not easily obtained (for example, discarded machinery or shop rags) or if the waste is a labpack or discarded laboratory reagent container, the following steps will be performed:

  - Visually verify the waste. Labpacks and combination packages must be removed from the outer container. If the waste meets the parameters specified in its documentation, confirmation of designation is complete. If it does not meet these parameters, proceed to the next step. This is considered a significant error under Section 1.4.

  - If possible and necessary, segregate/repackage the waste for shipment in a compliant manner. If the waste is not packaged in compliance with shipping requirements, proceed to the next step.

  - The waste must be redesignated using designation methods identified in WAC 173-303-070 through 173-303-100.

In all instances, test methods must conform to those referenced in the *Chemical Testing Methods* (Ecology March 1982, revised July 1983), the American Society for Testing Materials (ASTM 1982), or the *Test Methods for the Evaluation of Solid Waste, Physical/Chemical Methods (SW-846)*. All test methods must conform to those referenced in WAC 173-303-110. Petitions to use an alternate test method will be submitted in accordance with WAC 173-303-910.

All analytical tests performed to fulfill the requirements of Sections 1.4 and Chapter 4.0, Section 4.1.1.8 (Frequency of Analysis and Removal of Liquids from Containment System, respectively) will be performed in accordance with WAC 173-303-110. New test methods will be used within 90 days of the effective date of the State regulations or laws that mandate the use of the test method. To ensure analytical quality control, all analyses must fulfill, at a minimum, the quality procedures specified in SW-846 Volume II.

## 1.3 SAMPLING METHODS

Representative sampling can be requested by solid waste management to ensure proper waste identification, and the sampling will be performed under the direction of a waste coordinator at the point of generation.

The specific sampling methods and equipment vary with the chemical and physical nature of the waste material and the sampling circumstances. All sampling methods must conform to those referenced in WAC 173-303-110.

Sampling methods and equipment used for sampling different materials are presented in Table 5. For liquid waste in tanks or containers, a composite liquid waste sampler (COLIWASA) device, suction pump, or tubing is used to obtain a vertical core section. The length of the liquid sampler device must be adequate to reach the bottom of the vessel, thus providing a representative sample of all phases of the waste. Sample analysis must be performed on each phase of the waste. For solid waste, either tubing or a scoop can be used, depending on the nature of the waste. For bulk solids, such as contaminated soil, representative samples are obtained with a trier or an auger. For contaminated containment structures, such as concrete or steel, samples are obtained using the EPA wipe sampling procedure (EPA 1987). Composite sampling is performed by obtaining representative samples in random locations. Should a maximum chemical contamination level be required, the location of the highest likely chemical contamination is chosen for sampling purposes.

All sampling equipment and sample containers are handled so that cross-contamination is minimized. For example, most sampling equipment consists of disposable units to prevent cross-contamination. Plastic materials (other than Teflon) is not used for organic waste sampling. To ensure sample quality control, all sampling efforts must, at a minimum, be in accordance with the procedures specified in WAC 173-303-110. Appropriate packaging and preservation techniques and chain-of-custody requirements specified in SW-846 are used.

## 1.4 FREQUENCY OF ANALYSIS

At least 5 percent of the waste containers stored at 616 NRDWSF during a Federal fiscal year (October 1 through September 30) will undergo confirmation of designation pursuant to Sections 1.2 and 1.3 (Test Methods and Sampling Methods, respectively). The number of containers to meet the 5 percent requirement is the average of containers for the previous three months. For example, if 200 containers are received in January, 180 in February, and 220 in March, 10 containers of inbound waste must undergo confirmation of designation in April. All generating units that ship more than 20 containers through 616 NRDWSF in a fiscal year will have at least 1 container sampled and analyzed. Containers for which there is insufficient process knowledge or analytical information to designate without sampling and analysis might not be counted as part of the 5 percent requirement unless there is additional confirmation of designation independent of the generator designation. The generating unit's staff shall not select the waste containers to be sampled and analyzed other than identifying containers for which insufficient information is available to designate.

Currently, there are no generating units that generate a continuous, nonradioactive dangerous waste stream for which the chemical constituents

and their concentrations are not readily known from knowledge of the raw materials. Each request for waste disposition is considered unique and is normally a one-time-only situation. The need for sampling and analysis of a particular waste is identified at the time the waste is generated or at the time a disposal request is received by the solid waste management staff. Should a continuous, nonradioactive dangerous waste stream be identified, an initial laboratory analysis is made (if necessary) with periodic analysis repeated at least annually and whenever the process used or raw materials usage changes.

For waste without known process knowledge, samples of nonradioactive waste streams must be documented to have been sent to a laboratory for waste analysis when newly identified or whenever the process used or raw materials usage changes, and at least annually thereafter, to ensure that the waste designation assigned by the solid waste management staff (Section 3.2) is accurate and in compliance with land ban restrictions. This verification analysis does not eliminate the need for the offsite TSD facility to perform verification sampling as required by WAC 173-303-300(3).

If a waste is determined to be improperly designated because of a significant error in information provided by the waste coordinator, verification sampling of the responsible generating unit's waste stream(s) will be required. For the next six shipments or 2 months, whichever is longer, to 616 NRDWSF following the discovery of an incorrect designation, the responsible waste coordinator will be required to submit laboratory verification results for each waste stream that is addressed in a waste storage/disposal request. The laboratory verification results shall be obtained in accordance with WAC 173-303-110.

## 2.0 ADDITIONAL REQUIREMENTS FOR WASTES GENERATED OFFSITE

All waste received at the 616 NRDWSF, as described in Section 3.1, is subject to the confirmation of designation sampling requirements. Each shipment of waste received at the 616 NRDWSF must be accompanied by accurate and complete waste tracking forms for waste received from onsite sources and uniform hazardous waste manifests for waste received from offsite sources.

## 3.0 ADDITIONAL REQUIREMENTS FOR IGNITABLE, REACTIVE, OR INCOMPATIBLE WASTES

Based on the hazard characteristics identified by the waste coordinator, specific packaging instructions are provided by the solid waste management staff. Instructions taken into consideration are the ignitability, reactivity, and potential incompatibilities of the waste stream.

Instructions are in compliance with U.S. Department of Transportation regulations at all times. If multiple waste types are to be placed in a

single container (e.g., labpacks), compatibility analyses are performed and potentially incompatible waste is packaged in separate containers. In no case is waste of differing hazard classes packaged together. Dangerous waste is packaged in a compatible labpack and stored at the 616 NRDWSF before transport to an offsite TSD facility. Dangerous waste is not placed in an unwashed container that previously held an incompatible waste or material. A mixture of extremely hazardous waste and dangerous waste always will be designated as extremely hazardous waste. Various references are used to determine potential incompatibilities. Figure 3 presents a compatibility chart used, in conjunction with their associated tests, for this purpose.

Infrequently, the solid waste management staff is alerted to the existence of shock-sensitive or peroxide-forming chemicals that could present a serious explosive hazard. Examples are laboratory quantities of unstable 'dry' picric acid or outdated ethyl ether. These chemicals are not allowed at the 616 NRDWSF. The location of the chemical is noted and the risk to personnel and structures determined.

## 3.1 RESPONSE TO SIGNIFICANT DISCREPANCIES

The primary concern during acceptance of containers for storage is improper packaging or waste tracking form/Uniform Hazardous Waste Manifest discrepancies. Depending on the nature of the condition, such discrepancies can be resolved through the use of one or more of the following alternatives.

- Incorrect or incomplete entries on waste tracking forms can be corrected or completed with concurrence of the generating unit's waste coordinator and the solid waste management staff. Corrections are made by drawing a single line through the incorrect entry. Corrected entries are initialed and dated by the individual making the correction.

- The waste packages can be held and the generating unit's waste coordinator requested to provide written instructions for use in correcting conditions before the waste is accepted.

- The generating unit's waste coordinator can be requested to correct the condition before the waste is accepted.

Waste tracking form and/or Uniform Hazardous Waste Manifest discrepancies are considered resolved when all parties are satisfied with the designation and packaging. To prevent any problems that could occur during transportation back to generating units, all waste tracking form and/or Uniform Hazardous Waste Manifest discrepancies are resolved at the 616 NRDWSF.

## 3.2 PROVISIONS FOR NONACCEPTANCE OF SHIPMENT

Shipments of materials that the 616 NRDWSF is not designed to store [explosives, class IV oxidizers greater than 4.5 kilograms, and waste without proper radiation releases, if applicable] are rejected. All other types of discrepancies are resolved at the 616 NRDWSF before further transportation.

If a shipment arrives in a condition as to present a hazard to public health or the environment in the process of further transportation, the contingency plan is implemented. The contingency plan is described in the Building Emergency Plan - 616 Building provided in Appendix 7A.

This page intentionally left blank.

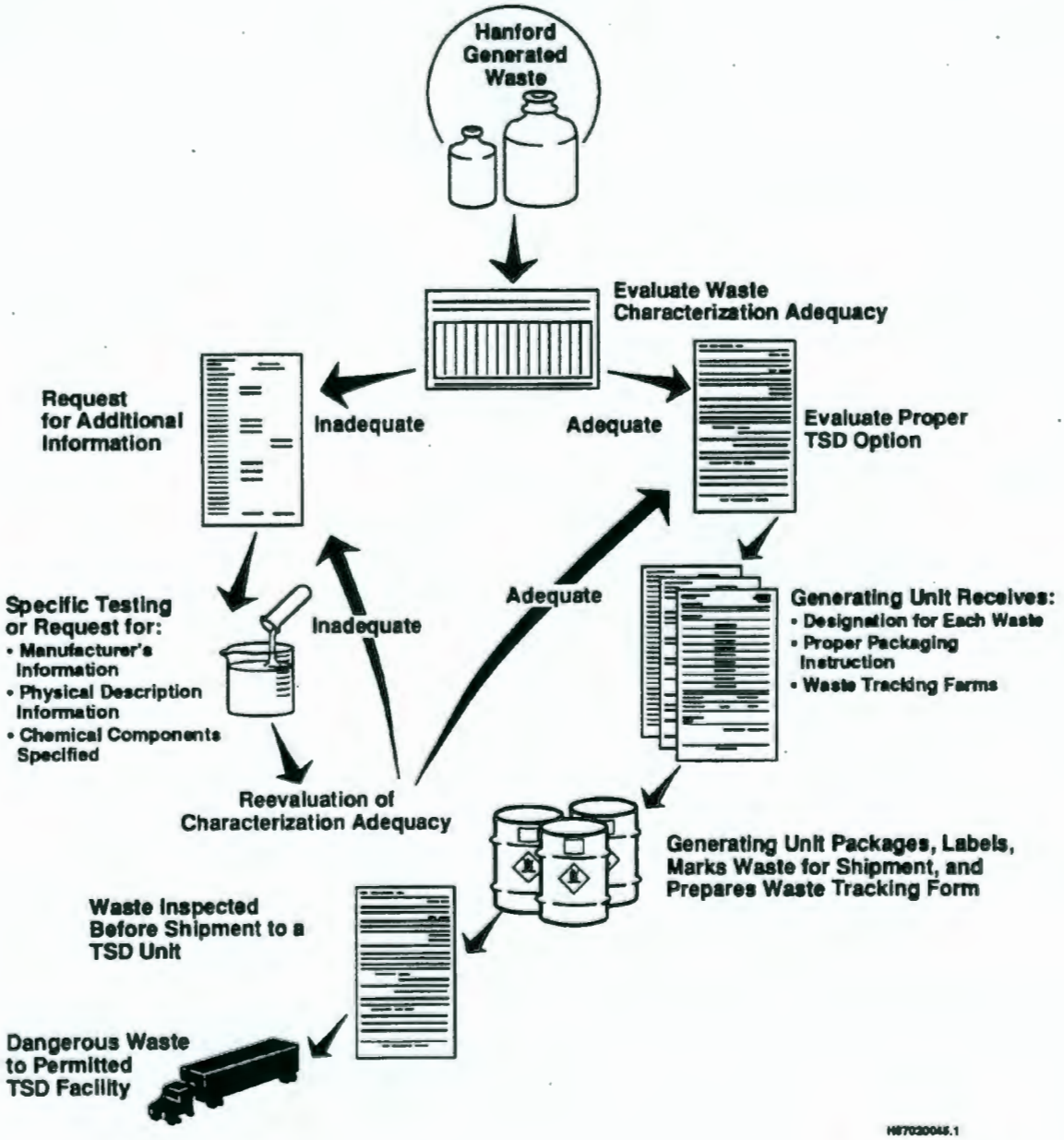


Figure 1. Waste Control Procedure Description.

*SOLID WASTE DESIGNATION WORKSHEET*

| DESCRIPTION OF WASTE | | | | | | | |
|---|---|---|---|---|---|---|---|
| WSDR # | | Container Quantity and Type | | | | | |
| Item # | | Solid Phase | ☐ | Density † | | Waste Status | |
| MSDS # | | Liquid Phase | ☐ | pH | | Designator | |
| Weight, kg | | Gas Phase | ☐ | FT, (°F) | | Desig. Date | |

† *For solid & liquid substances & mixtures of substances, the numerical values of mass density & specific gravity for any given sample of matter are equal to one another.*

| CHEMICAL COMPOSITION OF WASTE | ECOLOGY TOX. CATEGORY | WEIGHT % (w/o) | ‡ (Σ w/o i) + ∑ i = X, A, B, C, D | REFERENCE (RTECS, etc.) |
|---|---|---|---|---|
| | | | | |
| | | | | |
| | | | | |
| | | | | |
| | | | | |
| | | | | |
| | | | | |

‡ *Equivalent Concentration (EC%)* = $\sum w/o\ X + \frac{\sum w/o\ A}{10} + \frac{\sum w/o\ B}{100} + \frac{\sum w/o\ C}{1{,}000} + \frac{\sum w/o\ D}{10{,}000}$ = | EC% =

| HAZARDOUS WASTE CATEGORY | GUIDING DOCUMENTS | REG ? Yes | No | WASTE CLASS DW/EHW/AHW | HAZARDOUS WASTE CODES | LDR ? Yes | No |
|---|---|---|---|---|---|---|---|
| DANGEROUS WASTE SOURCE Used: Possibly one of: F-, K-, & W001 | 40 CFR 261.31 & 261.32 WAC 173-303-082 & WAC 173-303-9904 List | ☐ | ☐ | | | ☐ | ☐ |
| DISCARDED CHEMICAL PRODUCT Unused & Sole active ingredient: P & U | 40 CFR 261.33 WAC 173-303-081 & WAC 173-303-9903 List | ☐ | ☐ | | | ☐ | ☐ |
| CHARACTERISTIC OF IGNITABILITY Flashpoint < 140°F and/or oxidizer: D001 | 40 CFR 261.21 49 CFR 173.115 - 127 WAC 173-303-090 (5) | ☐ | ☐ | | | ☐ | ☐ |
| CHARACTERISTIC OF CORROSIVITY pH ≤ 2 or pH ≥ 12.5: D002 | 40 CFR 261.22 49 CFR 173.136 WAC 173-303-090 (6) | ☐ | ☐ | | | ☐ | ☐ |
| CHARACTERISTIC OF REACTIVITY Water-reactive, explosive, etc.: D003 | 40 CFR 261.23 WAC 173-303-090 (7) (No 49 CFR reference) | ☐ | ☐ | | | ☐ | ☐ |
| TOXICITY CHARACTERISTIC (TC) Unlisted Hazardous Waste: D004 - D043 | 40 CFR 261.24 WAC 173-303-090 (8) (Use LAB WORKSHEET) | ☐ | ☐ | | | ☐ | ☐ |
| TOXICITY CRITERIA Total EC% > 0.001; see 9906 Graph to determine if WT02-DW or WT01-EHW | WAC 173-303-100 (5) & 173-303-9906 Graph; Total EC% from table above (Consult RTECS) | ☐ | ☐ | | | ☐ | ☐ |
| PERSISTENCE CRITERIA HH > 0.01%, WP02-DW or HH > 1%, WP01-EHW; PAH > 1%, WP03-EHW | WAC 173-303-100 (6) & 173-303-9907 Graph; (No DW for PAH) | ☐ | ☐ | | | ☐ | ☐ |
| CARCINOGENIC CRITERIA > 0.01% single carcinogen, WC02-DW or > 1.0 % total carcinogens, WC01-DW | WAC 173-303-100 (7) (No EHW for carcinogens) (Read ECOLOGY letter(s)) | ☐ | ☐ | | | ☐ | ☐ |
| PCB WASTE Possibly one of: W001, PCB1, or PCB2 | 40 CFR 761 (TSCA) WAC 173-303-9904 List (Use PCB FLOWSHEET) | ☐ | ☐ | | | ☐ | ☐ |

• *NOTE: The SOLID WASTE DESIGNATION WORKSHEET is intended to be used with the SOLID WASTE DESIGNATION FLOWSHEET.*

| PROPER SHIPPING NAME | | | | | |
|---|---|---|---|---|---|
| Waste Class | | Waste Codes | | | |
| Hazard Class | | Hazard Labels | | | |
| DOT ID # | | Ship To | | | |
| Packaging | | Storage Cell | | Land Ban Codes | |

Figure 2. Typical Treatment, Storage, and/or Disposal Worksheet.

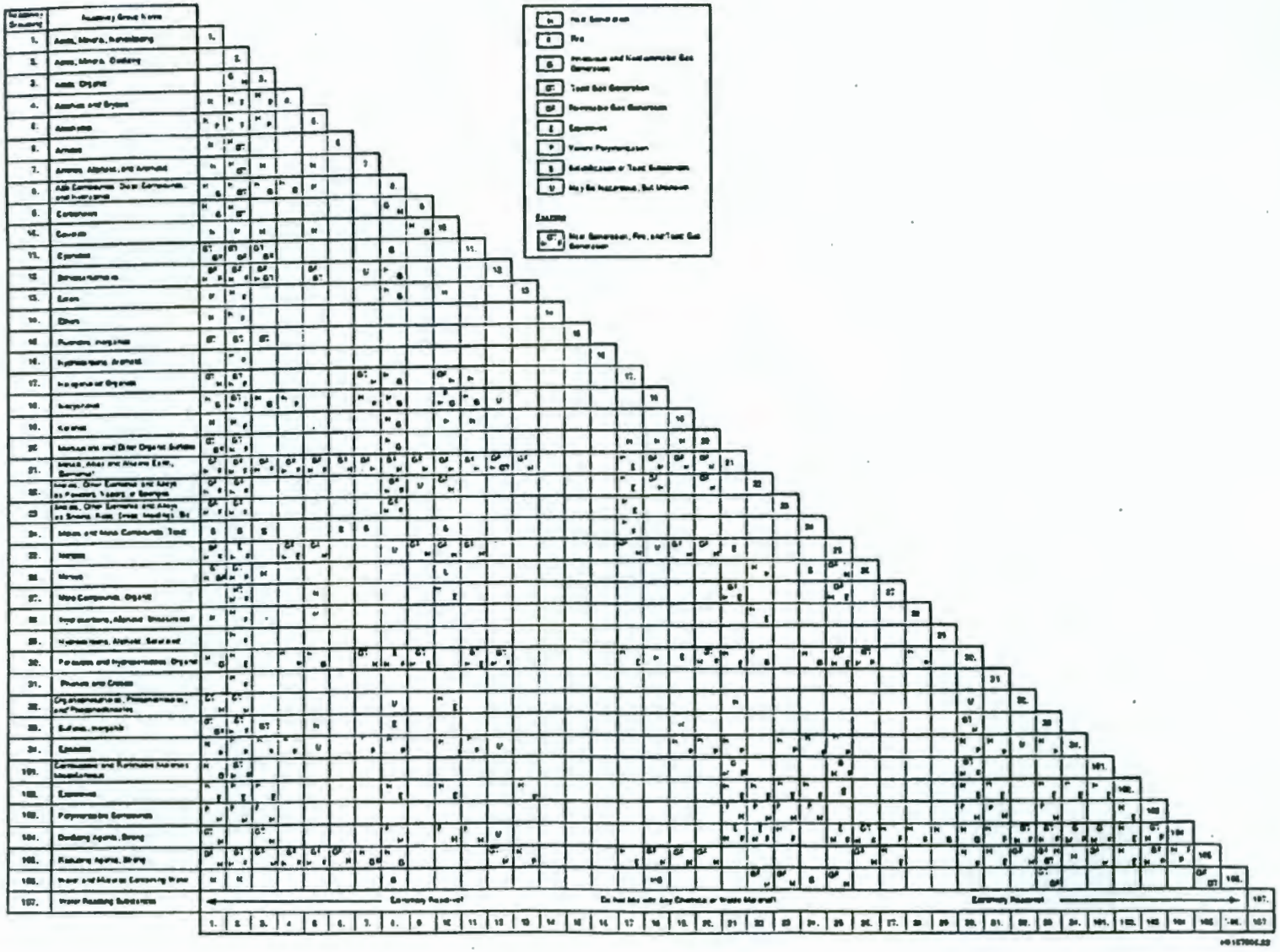

Figure 3. Compatibility Chart.

Table 1. Parameters and Rationale for Waste Designation. (sheet 1 of 2)

| Analytical Parameter | Rationale for Selection |
|---|---|
| 1. Radioactive screen | All waste suspected of being radioactively contaminated or located within a radioactive zone is screened for radioactivity before being released to nonradioactive areas for the purpose of safe handling and proper management of the hazard characteristic. |
| 2. pH | To indicate the degree of corrosivity of the waste for safe handling and to establish a relatively simple indicator parameter for the purpose of verification. |
| 3. Flash point | To determine conditions for ignitability of waste content for safe handling. Organic waste that is determined to be ignitable will be directed to incineration or to reuse or recycle options if possible. This test also will determine if waste is an Ecology-and/or U.S. Department of Transportation-regulated ignitable, flammable, or combustible substance. |
| 4. Water reactivity | To determine whether the waste has a potential to violently react with water to form gases or generate heat for the purpose of safe handling and proper disposition. The need for waste treatment may be determined, should waste be considered water reactive. |
| 5. Reactive cyanide/ reactive sulfide content | To determine if waste produces hydrogen cyanide or hydrogen sulfide on acidification below pH 2. A positive cyanide or sulfide screen would direct the waste to a treatment or incineration facility. This waste would not be landfilled. This information would not be required for waste with pH less than 6. |
| 6. Chemical compatibility | An analysis of dangerous reaction potential with other waste types will be performed for the purpose of segregating waste types in the 616 NRDWSF. |
| 7. Physical description | To determine the general physical characteristics of the waste (e.g., viscosity, color, texture, odor-free liquids) for comparison between generating unit-supplied information and verification by the Solid Waste Engineering staff. |
| 8. Specific gravity | To establish a measurement for a parameter that effectively compares liquid waste characteristics against generating unit-supplied information. |
| 9. PCB screen | To determine PCB content in oil-bearing waste for the purpose of managing this waste in accordance with regulations prescribed in the *Toxic Substance Control Act of 1976*. |

Table 1. Parameters and Rationale for Waste Designation. (sheet 2 of 2)

| Analytical Parameter | Rationale for Selection |
|---|---|
| 10. TCLP | A method used to determine whether a waste is a regulated toxic waste due to its toxicity characteristics. |
| 11. Toxicity | To determine whether a waste is Ecology-regulated dangerous waste or extremely hazardous waste because of its toxic constituents as determined by the NIOSH Registry of Toxic Effects. |
| 12. Halogenated hydrocarbons | To determine whether a waste is Ecology-regulated dangerous waste or extremely hazardous waste because of its halogenated hydrocarbon content. |
| 13. Polycyclic aromatic hydrocarbons | To determine whether a waste is Ecology-regulated dangerous waste or extremely hazardous waste because of its polycyclic aromatic hydrocarbon content. |
| 14. Carcinogenicity | To determine whether a waste is Ecology-regulated dangerous waste or extremely hazardous waste because of its carcinogenic chemical constituents as determined by the International Agency for Research on Cancer. |
| 15. Biological testing | To determine whether a waste is Ecology-regulated dangerous waste or extremely hazardous waste because of its toxic constituents as determined by tests on biological systems. |

Ecology = Washington State Department of Ecology
NIOSH = National Institute for Occupational Safety and Health
PCB = polychlorinated biphenyl
TCLP = toxicity characteristics leaching procedure

Table 2. Analytical Methodologies.

| Parameter | Methods* |
|---|---|
| Ignitability | *Chemical Testing Methods*, March 1982, revised July 1983 |
| Corrosivity | *Chemical Testing Methods*, March 1982, revised July 1983, including the addendum *Test Method for Determining pH of Solutions in Contact with Solids*, March 1984 |
| Reactivity | *Chemical Testing Methods*, March 1982, revised July 1983 |
| Toxicity characteristics leaching procedure | *EPA Final Rule*, Federal Register, Volume 55, pages 11799 through 11877, March 1990 |
| Halogenated hydrocarbons | *Chemical Testing Methods*, March 1982, revised July 1983 |
| Polycyclic aromatic hydrocarbons | *Chemical Testing Methods*, March 1982, revised July 1983 and March 1984 |
| Static acute fish toxicity test | *Biological Testing Methods*, July 1980 |
| Acute oral rat toxicity test | *Biological Testing Methods*, July 1980 |
| Free liquids (absence or presence) | *Test Methods for Evaluating Solid Waste, Physical/Chemical Methods, SW-846* (most recent edition and all updates), Including "Method 9095" (Paint Filter Liquids Test) |
| Chlorinated dibenzo-p-dioxins and dibenzofurans | 40 CFR 261, Appendix X |
| Polychlorinated biphenyls in transformer fluids and waste oils | EPA-600/4-81-045 |
| Polychlorinated biphenyls in mineral insulating oils by gas chromatography | ASTM Standard D 4059-86 |

*WAC 173-303-110 - unless otherwise noted.
EPA = U.S. Environmental Protection Agency.
ASTM = American Society for Testing and Materials.

Table 3. Sampling Methods and Equipment.

| Material | Sampling method | Sampling equipment |
|---|---|---|
| Containerized liquids | SW-846 | COLIWASA*, suction pump, or tubing |
| Extremely viscous liquid | ASTM D140-70 | Tubing or trier |
| Crushed or powdered material | ASTM D364-75 | Tubing, trier, auger, scoop, or shovel |
| Soil or rock-like material | ASTM D420-69 | Tubing, trier, auger, scoop, or shovel |
| Soil-like material | ASTM D1452-65 | Tubing, trier, auger, scoop, or shovel |
| Fly ash-like material | ASTM D2234-76 | Tubing, trier, auger, scoop, or shovel |
| Containment systems | Wipe sampling (OSHA 1977) | Filter paper and cleaning solution |

*COLIWASA = composite liquid waste sampler device.

This page intentionally left blank.

# APPENDIX 4A

# CONSTRUCTION SPECIFICATION

This page intentionally left blank.

MARKED-UP SPECIFICATION

EEUpson 8-1-86
Prepared by Date

MDPatterson 8-6-86
Concurrence Date

B-526-C1

DFC's affecting Specification
#5
#7
#8
#10

DT's affecting Specification
#8
#18C
#18D
#22
#24.A
#33.A.1
#33.A.2
#39
#103.2
#105
#106
#108
#109
#113.B
#117

SC's affecting Specification
JAJ-1791 SC-12
JAJ-1791 ADD-1

CONSTRUCTION SPECIFICATION FOR

NONRADIOACTIVE HAZARDOUS CHEMICAL WASTE FACILITY

Work Order X52602

Prepared By:

KAISER ENGINEERS HANFORD COMPANY
Richland, Washington

For the US Department of Energy

Contract DE-AC06-82RL10367

KEH Job R688A2

| | | | |
|---|---|---|---|
| Lead Lead Engineer | 6-24-85 Date | Specifications Department | 6-24-85 Date |
| Safety | 6/21/85 Date | Chief Design Engineer | 6-24-85 Date |
| Quality Assurance | 6-21-85 Date | Project Engineer | 7-25-85 Date |

ROCKWELL HANFORD OPERATIONS

J. J. Noble 7/25/85
J. J. Noble Date
Cognizant Engineer

4459K/0240K

## TABLE OF CONTENTS


| | | Total Pages |
|---|---|---|
| DIVISION 1 - GENERAL REQUIREMENTS | | |
| Section 01060 | Referenced Standards and Specifications | 10 |
| Section 01300 | Submittals | 5 |
| DIVISION 2 - SITEWORK | | |
| Section 02200 | Earthwork | 7 |
| Section 02650 | Piped Utilities | 6 |
| Section 02668 | Fire Water Systems | 6 |
| DIVISION 3 - CONCRETE | | |
| Section 03300 | Cast-In-Place Concrete | 5 |
| Section 03419 | Precast Prestressed Concrete Sections | 4 |
| DIVISION 4 - MASONRY | | |
| Section 04220 | Concrete Unit Masonry | 4 |
| DIVISION 5 - METALS | | |
| Section 05120 | Structural Steel | 4 |
| Section 05300 | Metal Decking | 3 |
| Section 05500 | Metal Fabrications | 3 |
| DIVISION 6 - WOOD | | |
| Section 06410 | Custom Casework | 2 |
| DIVISION 7 - THERMAL AND MOISTURE PROTECTION | | |
| Section 07200 | Insulation | 2 |
| Section 07411 | Preformed Metal Siding | 2 |
| Section 07510 | Built-Up Bituminous Roofing on Concrete & Metal Deck | 5 |
| Section 07600 | Flashing and Sheet Metal | 3 |
| Section 07700 | Explosion Relief Vent | 1 |
| Section 07920 | Sealants and Caulkings | 2 |
| DIVISION 8 - DOORS, WINDOWS, AND GLASS | | |
| Section 08100 | Metal Doors and Frames | 2 |
| Section 08315 | Blast-Resistant Doors | 1 |
| Section 08332 | Overhead Coiling Doors | 2 |
| Section 08710 | Finish Hardware | 3 |
| Section 08800 | Glass and Glazing | 1 |
| DIVISION 9 - FINISHES | | |
| Section 09250 | Gypsum Board | 4 |
| Section 09500 | Acoustical System | 2 |
| Section 09650 | Resilient Flooring | 2 |
| Section 09900 | Painting | 5 |

TABLE OF CONTENTS (Continued)


| | | Total Pages |
|---|---|---|
| DIVISION 10 - SPECIALTIES | | |
| Section 10160 | Metal Toilet Compartments | 2 |
| Section 10440 | Signs | 1 |
| Section 10500 | Lockers | 1 |
| Section 10670 | Storage Shelving | 1 |
| Section 10800 | Toilet Room Accessories | 2 |
| DIVISION 15 - MECHANICAL | | |
| Section 15300 | Fire Protection | 6 |
| Section 15400 | Plumbing | 12 |
| Section 15500 | Heating, Ventilating, and Air Conditioning | 9 |
| DIVISION 16 - ELECTRICAL | | |
| Section 16300 | High Voltage Distribution (Above 600-Volt) | 5 |
| Section 16400 | Service and Distribution (600-Volt and Below) | 15 |
| Section 16720 | Alarm and Detection Systems | 9 |
| Appendix A | Sample Battery Calculation | 1 |

SECTION 01060

REFERENCED STANDARDS AND SPECIFICATIONS

## REFERENCED STANDARDS AND SPECIFICATIONS

The following standards and specifications of the issues listed below, but referred to thereafter by basic designation only, form a part of this Specification to the extent indicated by subsequent references in this Specification.

A. American Concrete Institute (ACI)

| | |
|---|---|
| 301-84 | Specifications for Structural Concrete for Buildings |
| 318-83 | Building Code Requirements for Reinforced Concrete |

B. American Institute of Steel Construction, Inc (AISC)

| | |
|---|---|
| November, 1978 | Specification for the Design, Fabrication and Erection of Structural Steel for Buildings |
| 1980 Edition | Manual of Steel Construction Eighth Edition |
| August, 1980 | Specification for Structural Joints Using ASTM A 325 or A 490 Bolts |

C. American Iron and Steel Institute (AISI)

| | |
|---|---|
| 1980 Edition | Manual of Steel Construction |

D. American National Standards Institute (ANSI)

| | |
|---|---|
| 05.1 | Specification and Dimensions for Wood Poles |
| A13.1-81 | Identification of Piping Systems |
| B16.3-1977 | Malleable-Iron Threaded Fittings, Class 150 and 300 |
| B31.1-1983 Edition, w/Addenda thru Summer 1984 | Standard Code for Pressure Piping-Power Piping |

| | |
|---|---|
| C2-1984 | National Electrical Safety Code |
| C57.12.00 | General Requirements for Liquid-Immersed Distribution, Power, and Regulating Transformers |
| C57.12.20 | Requirements for Overhead-Type Distribution Transformers 500 kVA and Smaller: High-Voltage, 67,000 Volts and Below; Low Voltage, 15,000 Volts and Below |
| C80.1-83 | Standard for Rigid Steel-Conduit Zinc-Coated |
| C82.1 | Specification for Fluorescent Lamp Ballasts |
| C97.1-72 (R1978) | Standard for Low-Voltage Cartridge Fuses 600 Volts or Less |
| Z53.1 | Safety Color Code for Marking Physical Hazards |

E. American Society of Mechanical Engineers (ASME)

| | |
|---|---|
| Section IX | Welding and Brazing Qualifications |

F. American Society for Testing and Materials (ASTM)

| | |
|---|---|
| A 36-81a | Structural Steel |
| A 53-83 | Pipe, Steel, Black and Hot-Dipped, Zinc-Coated Welded and Seamless |
| A 74-82 | Standard Specification for Cast Iron Soil Pipe and Fittings |
| A 82-79 | Cold-Drawn Steel Wire for Concrete Reinforcement |
| A 108-81 | Standard Specification for Steel Bars, Carbon, Cold Finished, Standard Quality |
| A 120-76 | Pipe, Steel Black and Hot-Dipped, Zinc Coated (Galvanized) Welded and Seamless, for Ordinary Uses |

| | |
|---|---|
| A 123-78 | Standard Specification for Zinc-Coating on Products Fabricated from Rolled, Pressed, and Forged Steel Shapes, Plates, Bars, and Strip |
| A 153-82 | Zinc Coating on Iron and Steel Hardware |
| A 185-79 | Welded Steel Wire Fabric for Concrete Reinforcement |
| A 307-83a | Carbon Steel Externally Threaded Standard Fasteners |
| A 325-83c | High Strength Bolts for Structural Steel Joints |
| A 416-80 | Uncoated Seven-Wire Stress-Relieved Strand for Prestressed Concrete |
| A 490-83a | Heat-Treated Steel Structural Bolts, 150 ksi Minimum Tensile Strength |
| A 527-80 | Steel Sheet, Zinc-Coated (Galvanized) by Hot-Dip Process, Lock Forming Quality |
| A 563-83a | Standard Specification for Carbon and Alloy Steel Nuts |
| A 615-82 | Deformed and Plain Billet-Steel Bars for Concrete Reinforcement |
| B 32-83 | Solder Material |
| C 33-84 | Concrete Aggregates |
| C 90-75 (1981) | Hollow Load-Bearing Concrete Masonry Units |
| C 94-83 | Ready Mix Concrete |
| C 150-84 | Portland Cement |

| | |
|---|---|
| C 260-77 | Air-Entrained Admixtures for Concrete |
| C 270-84 | Mortar for Unit Masonry |
| C 476-83 | Grout for Masonry |
| C 494-82 | Chemical Admixtures for Concrete |
| C 636-76 | Installation of Metal Ceiling Suspension Systems for Acoustical Tile and Lay-In Panels |
| D 653-83 | Standard Terms and Symbols Relating to Soil and Rock |
| D 1785-83 | Poly (Vinyl Chloride) (PVC) Plastic Pipe, Schedule 40, 80, and 120 |
| D 2464-76 | Poly (Vinyl Chloride) (PVC) Plastic Pipe Fittings, Schedule 80 |
| D 2466-78 | Poly (Vinyl Chloride) (PVC) Plastic Pipe Fittings, Schedule 40 |
| D 2564-80 | Solvent Cements for Poly (Vinyl Chloride) (PVC) Plastic Pipe and Fittings |
| D 2729-83 | Poly (Vinyl Chloride) (PVC) Sewer Pipe and Fittings |
| D 2855-83 | Solvent-Cemented Joints with Poly (Vinyl Chloride) (PVC) Pipe and Fittings |
| D 3034-83 | Type PSM Poly (Vinyl Chloride) (PVC) Sewer Pipe and Fittings |
| E 84 | Surface Burning Characteristics of Building Materials |
| F 436-83b | Hardened Steel Washers |

G. Air-Conditioning and Refrigeration Institute (ARI)

| | |
|---|---|
| 240-81 | Standard for Air-Source Unitary Heat Pump Equipment |

H. Architectural Woodwork Institute (AWI)

| | |
|---|---|
| 1984 | Architectural Woodwork Quality Standards, Guide Specifications and Quality Certification Program |

I. American Welding Society (AWS)

| | |
|---|---|
| D1.1-84 | Structural Welding Code |
| D1.3-81 | Structural Welding Code-Sheet Steel |
| D1.4-79 | Structural Welding Code-Reinforcing Steel |
| D9.1-84 | Specification for Welding of Sheet Metal |

J. American Wood-Preservers' Association (AWPA)

| | |
|---|---|
| C7 | Western Red Cedar, Northern White Cedar, and Alaska Yellow Cedar Poles -- Preservative Treatment of Incised Pole Butts by the Thermal Process |
| P1 | Coal Tar Creosote for Land and Fresh Water Use |

K. American Water Works Association (AWWA)

| | |
|---|---|
| C104-80 | Standard for Cement-Mortar Lining for Ductile-Iron and Gray-Iron Pipe and Fittings for Water |
| C110-82 | Standard for Gray-Iron and Ductile-Iron Fittings, 3 Inch through 48 Inch, for Water and Other Liquids |
| C111-80 | Standard for Rubber Gasket Joints for Gray-Iron and Ductile-Iron Pressure Pipe Fittings |

| | |
|---|---|
| C151-81 | Standard for Ductile-Iron Pipe, Centrifugally Cast in Metal Molds or Sand-Lined Molds for Water or Other Liquids |
| C500-80 | AWWA Standard for Gate Valves, 3 Through 48 In. NPS, for Water and Sewage Systems |
| C502-80 | AWWA Standard for Dry-Barrel Fire Hydrants |
| C600-82 | AWWA Standard for Installation of Gray and Ductile Cast-Iron Water Mains and Appurtenances |
| C601-81 | AWWA Standard for Disinfecting Water Mains |

L. Cast Iron Soil Pipe Institute (CISPI)

| | |
|---|---|
| 301-82 | Specification Data for Hubless Cast Iron Sanitary System with No-Hub Pipe and Fittings |

M. Factory Mutual System (FM)

| | |
|---|---|
| 1985 Edition | Approval Guide |
| Loss Prevention Data Sheets 1-28 | Insulated Steel Deck |

N. Federal Specification (FS)

| | |
|---|---|
| RR-G-661E | Grating, Metal, Bar Type |
| TT-E-489G | Enamel, Alkyd, Gloss (for Exterior and Interior Surfaces) |
| TT-P-645A | Primer, Paint, Zinc Chromate, Alkyd Type |
| TT-S-00230C Including AMD 2 | Sealing Compound, Elastomeric Type, Single Component |
| W-C-1094A | Conduit and Conduit Fittings, Plastic, Rigid |
| W-F-406C | Fittings for Cable, Power, Electrical And Conduit, Metal, Flexible |

| | |
|---|---|
| W-P-115B | Panel, Power Distribution |
| W-S-896E/Gen<br>Including AMD 2 | Switches, Toggle, Flush Mounted |
| WW-C-00540C<br>Including INT AMD 1 | Conduit, Metal, Rigid: And Coupling, Elbow, and Nipple, Electrical Conduit: Aluminum |
| WW-C-566C | Conduit, Metal, Flexible |
| WW-U-531E | Unions, Pipe, Steel or Malleable Iron; Threaded Connection, 150 Lb. and 250 Lb. |

O. Federal Standards (Fed Std)

| | |
|---|---|
| 141b | Paint, Varnish, Laquer, and Related Materials: Method for Sampling and Testing |
| 595A, including<br>Chgs Nos 1, 2, 3, 4, 5, and 6 | Colors Vol 1 |

P. International Association of Plumbing and Mechanical Officials (IAPMO)

| | |
|---|---|
| IS-6-75 | Hubless Cast Iron Sanitary Systems |
| 1982 Edition | Uniform Plumbing Code |

Q. International Conference of Building Officials (ICBO)

| | |
|---|---|
| UBC 1982 | Uniform Building Code |

R. Institute of Electrical and Electronics Engineers (IEEE)

| | |
|---|---|
| Std 28 | Surge Arresters for Alternating-Current Power Circuits |

S. National Electrical Manufacturers Association (NEMA)

| | |
|---|---|
| FB 1-77 w/Rev thru Dec 80 | Fittings and Supports for Conduit and Cable Assemblies |
| ICS-2-78 | Industrial Controls and Systems |

| | |
|---|---|
| ICS-6-78 | Enclosures for Industrial Controls and Systems |
| KS1 | Enclosed Switches |
| RN 1-74 | Polyvinyl-Chloride Externally Coated Galvanized Rigid Steel Conduit and Electrical Metallic Tubing |
| ST20 | Dry-Type Transformer for General Applications |
| WD-1 | General-Purpose Wiring Devices |

T. National Fire Protection Association (NFPA)

| | |
|---|---|
| NFPA 13 - 1985 | Standard for Installation of Sprinkler Systems |
| NFPA 24 - 1984 | Standard for the Installation of Private Fire Service Mains and Their Appurtenances |
| NFPA 70 - 1984 | National Electrical Code (NEC) |
| NFPA 72B-1979 | Standard for the Installation, Maintenance and Use of Auxiliary Protective Signaling Systems for Fire Alarm Service |
| NFPA 80-1983 | Standard for Fire Doors and Windows |
| NFPA 1221 - 1984 | Standard for the Installation, Maintenance and Use of Public Fire Service Communications |
| 1963 | Standard for Screw Threads and Gaskets for Fire Hose Connections, 1985 Edition |

U. Prestressed Concrete Institute (PCI)

| | |
|---|---|
| MNL-116-77 | Manual for Quality Control for Plants and Production of Precast Prestressed Concrete Products |

V. Sheet Metal and Air Conditioning Contractors National Association, Inc (SMACNA)

| | |
|---|---|
| 1974 | Testing, Balancing, and Adjusting of Environmental Systems |
| 1976, 5th Edition | Low Pressure Duct Construction Standards |

W. Steel Deck Institute (SDI)

| | |
|---|---|
| 1981-82 | Steel Deck Institute Design Manual for Floor Decks and Roof Decks |

X. Steel Door Institute

| | |
|---|---|
| 100-83 | Standard Specifications for Steel Doors and Frames |

Y. Underwriters Laboratories, Inc (UL)

| | |
|---|---|
| January 1985 | Fire Protection Equipment Directory |
| 1984, Including Nov 1984 Supplement | Electrical Appliance and Utilization Equipment Directory |
| 1984, Including Nov 1984 Supplement | Electrical Construction Materials Directory |
| UL 38-1981 w/Rev thru Sep 1981 | Manually Actuated Signaling Boxes for Use with Fire Protection Signaling Systems |
| UL 555-1979 | Standard for Safety, Fire Dampers and Ceiling Dampers |
| UL 797-1977 | Standard for Electrical Metallic Tubing |
| UL 1242-1977 | Standard for Safety, Conduit, Intermediate, Metal |
| January 1985 | Building Materials Directory |

Z. Washington State Department of Transportation (WSDOT)

M 41-10-84 — Standard Specification for Road, Bridge, and Municipal Construction

END OF SECTION

SECTION 01300

SUBMITTALS

1.1 DESCRIPTION

1.1.1 This section summarizes the requirements for the submittal of documents which are defined in Part 1 of each Section of this Specification and describes procedures for "Supplemental" submittals.

1.2 SUBMITTALS

1.2.1 Submittals listed in Part 1 of each of the sections of this Specification requires either review and approval or review for record.

1.2.1.1 Submittals requiring review and approval shall have been approved and returned to the Contractor before proceeding with procurement, fabrication, or construction.

a. Approved submittals are identified by a submittal stamp with the "Approved" or "Approved with Exception" box checked. "Approved" signifies general concurrence to achieve conformance with the design concept of the project and compliance with the requirements of the contract documents. "Approved with Exception" signifies general concurrence with noteworthy comments or clarifications. Approval of Contractor submittals does not relieve the Contractor of responsibility for errors which may be contained therein.

b. A submittal which is Not Approved is identified on the submittal stamp as "Not Approved, Revise and Resubmit." Said submittal is considered, by the Architect-Engineer (A-E), to be technically deficient or incomplete and therefore, unacceptable. Resubmittal is required, hence fabrication, procurement, or performance of procedures shall not proceed.

1.2.1.2 Review For Record indicates that the Contractor may proceed with procurement, fabrication, or construction; however, said acceptance is contingent upon strict compliance with the Drawings and Specification. Incomplete or inaccurate submittal data will be returned to the Contractor with appropriate comments and items procured or work performed shall be corrected.

1.2.2 Supplemental Submittals: Submittals initiated by the Contractor for consideration of "equal substitute" products or corrective procedures shall contain sufficient data for review and approval. "Equal Substitute" product submittals must contain outline dimensions, operating clearances, and sufficient engineering data to indicate substantial compliance with the Drawings and Specification. Identify each submittal by the Specification number, section, and paragraph number; or a referenced drawing number and detail. Improperly identified submittals will be returned without consideration.

1.3 SUBMITTAL PROCEDURES

1.3.1 Submittals are itemized in Article 1.4, Schedule of Submittals, and are identified by Submittal Number and Title. Identify each submittal by the Specification Number and Submittal Number noted in the Schedule.

1.3.2 The Contractor shall review all submittals before forwarding such data to the A-E. The Contractor shall sign Data Transmittal form indicating that the submittal has been reviewed for compliance with the contract documents. The Contractor's signature represents that he has verified all materials and field measurements, and has checked and coordinated the information contained within such submittals with the requirements of the contract documents. Only signed submittals shall be forwarded to the A-E. Any submittal which is not signed will be returned by the A-E without review.

1.4 SCHEDULE OF SUBMITTALS

| Submittal Number | Submittal Title | Review and Approval | Review For Record |
|---|---|---|---|
| PIPED UTILITIES | | | |
| 02650/1.1.1 | Leak/Pressure Test Procedures | Before testing | |
| 02650/1.1.2 | Method for Disposal of Flushing Water | | Before flushing |
| FIRE WATER SYSTEMS | | | |
| 02668/1.1.1 | Approval Data | Before delivery | |
| 02668/1.1.2 | Certified Vendor Information (CVI) | | Before installation |
| 02668/1.1.3 | NFPA Test Certificate | | Within 10 days after completion |
| CAST-IN-PLACE CONCRETE | | | |
| 03300/1.1.1 | Form Coating Materials | Before use | |
| 03300/1.1.2 | Reinforcing Steel Drawings | Before delivery | |
| 03300/1.1.3 | Block Diagram | Before installation of forms | |

| Submittal Number | Submittal Title | Review and Approval | Review For Record |
|---|---|---|---|
| 03300/1.1.4 | Concrete Materials, Mix Design, and Mix Proportions | Before mixing | |
| 03300/1.1.5 | Curing Procedure | Before mixing | |
| PRECAST PRESTRESSED CONCRETE SECTIONS | | | |
| 03419/1.1.1 | Fabrication Drawings | Before delivery | |
| 03419/1.1.2 | Concrete Materials and Mix Design | Before mixing | |
| 03419/1.1.3 | Record of Tests | Before mixing | |
| CONCRETE UNIT MASONRY | | | |
| 04220/1.1.1 | Method to Heat Masonry Units | Before erection | |
| STRUCTURAL STEEL | | | |
| 05120/1.1.1 | Fabrication and Erection Drawings | Before fabrication | |
| METAL DECKING | | | |
| 05300/1.1.1 | Installation Drawings | Before installation | |
| 05300/1.1.2 | Metal Deck Certifi-- cate of Compliance | Before installation | |
| PREFORMED METAL SIDING | | | |
| 07411/1.1.1 | Fabrication Drawings | Before fabrication | |
| 07411/1.1.2 | Performance Test Conformation | With delivery | |
| EXPLOSION RELIEF VENT | | | |
| 07700/1.1.1 | Fabrication Drawings | Before fabrication | |
| METAL DOORS AND FRAMES | | | |
| 08100/1.1.1 | Fabrication Drawings | Before delivery | |

| Submittal Number | Submittal Title | Review and Approval | Review For Record |
|---|---|---|---|
| BLAST-RESISTANT DOORS | | | |
| 08315/1.1.1 | Fabrication Drawings | Before delivery | |
| 08315/1.1.2 | Calculations | Before delivery | |
| OVERHEAD COILING DOORS | | | |
| 08332/1.1.1 | Fabrication Drawings | Before delivery | |
| 08332/1.1.2 | Certified Vendor Information (CVI) | | Before installation |
| FINISH HARDWARE | | | |
| 08710/1.1.1 | Hardware List | Concurrent with doors and frames | |
| FIRE PROTECTION | | | |
| 15300/1.1.1 | Approval Data | Before delivery | |
| 15300/1.1.2 | Certified Vendor Information (CVI) | | Before installation |
| 15300/1.1.3 | Design/Fabrication Drawings | Before fabrication | |
| 15300/1.1.4 | Calculation Data Sheets | Before fabrication | |
| 15300/1.1.5 | As-Built Drawings | | Within 10 days after completion |
| 15300/1.1.6 | NFPA Test Certificate | | Within 10 days after completion |
| PLUMBING | | | |
| 15400/1.1.1 | Approval Data | Before delivery | |
| 15400/1.1.2 | Certified Vendor Information (CVI) | | Before installation |
| 15400/1.1.3 | Method for Disposal of Flushing Water | | Before flushing |

| Submittal Number | Submittal Title | Review and Approval | Review For Record |
|---|---|---|---|
| HEATING, VENTILATING, AND AIR CONDITIONING | | | |
| 15500/1.1.1 | Certified Vendor Information (CVI) | | Before installation |
| 15500/1.1.2 | Test and Balance Procedure | Before testing | |
| 15500/1.1.3 | Test and Balance Data | | Within 10 days after test completion |
| HIGH VOLTAGE DISTRIBUTION (ABOVE 600-VOLT) | | | |
| 16300/1.1.1 | Approval Data | Before delivery | |
| 16300/1.1.2 | Certified Vendor Information (CVI) | | Before installation |
| SERVICE AND DISTRIBUTION (600-VOLT AND BELOW) | | | |
| 16400/1.1.1 | Approval Data | Before delivery | |
| 16400/1.1.2 | Certified Vendor Information (CVI) | | Before installation |
| ALARM AND DETECTION SYSTEMS | | | |
| 16720/1.1.1 | Approval Data | Before delivery | |
| 16720/1.1.2 | Certified Vendor Information (CVI) | | Before installation |

END OF SECTION

SECTION 02200

EARTHWORK

PART 1 - GENERAL

1.1 SUBMITTALS: Refer to Section 01300 for submittal procedures.

PART 2 - PRODUCTS

2.1 SOIL MATERIALS

2.1.1 General: Obtain select soils from the excavation or from other designated locations. Obtain on-site approval for soils.

2.1.2 Structural Fill or Backfill: Well-graded soil mixtures which may contain cobbles up to 3 inches in greatest dimension provided same are uniformly distributed and do not constitute more than 20% of the volume of the fill.

2.1.3 Common Fill or Backfill: Well-graded soil mixtures containing cobbles up to 8 inches in greatest dimension provided same are uniformly distributed and do not constitute more than 40% of the volume of the fill.

2.1.4 Cushion for Underground Pipe: Sand, as defined in ASTM D 653, or excavated sandy material having a maximum dimension of 1/2 inch.

2.1.5 Stabilization Material: Gravel as defined in ASTM D 653. Maximum size of particles 3/4 inch for parking area and 2 inch minus for other areas.

2.2 PLASTIC SHEET MARKER

2.2.1 Plastic Sheet Marker for Buried Piping and Conduit: 6-inch-wide, yellow nondetectable tape similar to "Terra Tape" as manufactured by Griffolyn Co, Inc. Tape shall be imprinted with a warning such as "Caution Buried Installation Below" at intervals of not more than 4 feet.

PART 3 - EXECUTION

3.1 EXCAVATION

3.1.1 Before performing any excavation, obtain an excavation permit for the area to be excavated. Excavation permits will be furnished by the Government's Representative upon advance notice of the scheduled activity.

3.1.2 Shore excavations which are more than 4 feet deep and which have sides sloped steeper than 1-1/2 horizontal to one vertical. Install shoring as excavation progresses and remove as backfilling is accomplished.

3.1.3 Do not store excavated or other material closer than 2 feet from the edge of the excavation unless a barrier is erected to retain the

excavated materials. Store and maintain materials in such a manner that they are prevented from falling or sliding into the excavation.

3.1.4 Wherever the slopes of excavations will intersect existing underground piping, electrical ducts, or direct buried electrical lines; install shoring or other means of support to prevent overstressing underground lines or to prevent interrupting service to existing buildings.

3.1.5 Footings and Foundations

3.1.5.1 Make excavations for footings to the depth shown on the drawings or to such further depth as is necessary to provide an undisturbed surface to receive the footing. Make excavations to the proper width with allowances made for forms and bracing. Make bottom of excavations compact, level, true, and free of loose material.

3.1.5.2 If over-excavation occurs where footings are designed to be placed on undisturbed earth, correct at the time of placing concrete by extending the concrete down to undisturbed earth, or by placement of backfill, compacted in accordance with Subparagraph 3.2.2.2(a).

3.1.6 Trenches for Underground Piping or Conduit

3.1.6.1 Make excavations for piping or conduit to the line and grade shown on the Drawings and wide enough to make the connections. Excavate with near vertical sides from bottom of trench up to 1 foot above the pipe or conduit. Excavate the trench deep enough to permit the placement of a compacted sand cushion (4 inches minimum thickness) beneath the pipe or conduit except where excavation is in undisturbed sand which will serve as a cushion or where lines are to be encased in concrete. Pare holes in trench bottoms for pipe couplings so that the pipe will bear full length of the barrel or section.

3.1.6.2 Install shoring (if required) to hold all materials and the surcharge pressure for the full depth of the trench.

3.1.6.3 Keep trenches free from standing water when pipe or conduit laying is in progress.

3.1.6.4 If over-excavation occurs, correct by placement of structural backfill.

3.2 FILLING AND BACKFILLING

3.2.1 General

3.2.1.1 Backfill Permit: Obtain all signatures required on a backfill permit for the area to be backfilled. Forms will be furnished by the Government's Representative. Work not started within five calendar days from the time the permit is approved shall not be started until a new permit has been approved. A continuing job that has not had backfill installed within the past five calendar days will require a new backfill permit.

3.2.1.2 The terms "fill" and "backfill" refer to the placement and compaction of soil excavated and stockpiled at the site or obtained from other locations.

3.2.1.3 Remove all debris and organic matter from the area to be filled or backfilled.

3.2.1.4 Use only select materials for fill or backfill. Keep materials free from frozen particles, lumps, organic matter, and trash.

3.2.1.5 Do not place fill or backfill on frozen ground.

3.2.1.6 Filling or backfilling by sluicing or flooding with water will not be permitted.

3.2.1.7 Bring fill or backfill up evenly on the sides of walls, structures, and pipes to avoid unbalanced loading.

3.2.1.8 Do not place fill or backfill against any concrete structure or foundation wall less than 14 days after completion of the structure or wall unless written permission is obtained. Provide wall support, where noted on the Drawings, before filling or backfilling.

3.2.1.9 Where stabilization is required, finish the subgrade 3 inches below the elevations shown on the Drawings.

3.2.2 Structural Fill or Backfill

3.2.2.1 Before placement of structural fill or backfill, demonstrate, to the Government's Representative, by physical test at the site, that the procedure proposed for the installation and compaction of the soils will provide the degree of compaction specified. Prepare a "Soil Compaction Procedure" Form KEH-382 (sample appended) in accordance with the printed instructions. Forms will be furnished by the Government's Representative.

3.2.2.2 Place structural backfill in accordance with WSDOT M41-10, Paragraph 2-03.3(14)C and the approved procedure as follows:

a. Use Method C under foundations, slabs, and pipelines.

b. Use Method B under pavements and roads, and within 5 feet of structures or poles supporting electric lines or pipes.

3.2.2.3 Compaction control tests will be in accordance with WSDOT M41-10, Paragraph 2-03.3(14)D.

3.2.3 Common Fill or Backfill

3.2.3.1 Place common fill or backfill in layers not more than 12 inches thick, loose measurement.

3.2.3.2 Compact each layer, full width, by at least one pass of a vibratory or rammer-type compactor, pneumatic-tired roller, loaded scraper wheel, grader wheel, or power roller.

3.2.3.3 Mound over top layer of backfill to a depth of 1 inch for each 12 inches of trench depth to a maximum mound height of 6 inches.

3.2.4 Filling or Backfilling for Underground Piping or Conduit

3.2.4.1 The sand cushion placed beneath pipe or conduit in trenches shall be material meeting the requirements of Paragraph 2.1.4.

3.2.4.2 Place and compact the sand cushion in trench prepared according to Subparagraph 3.1.6.1 before laying pipe or conduit. Compact sand cushion as specified for structural backfill.

3.2.4.3 Place backfill over joints in underground pipes only after pressure testing of the line has been completed.

3.2.4.4 Backfill under conduit and the haunches of the pipe, around the sides, and up to 1 foot above the top of the pipe or conduit with sand cushion material. Place and compact the material the same as specified for structural backfill. Compact with care, to avoid misalignment of the pipe and to provide uniform bearing along the barrel of the pipe.

3.2.4.5 Backfill pipe or conduit trenches from an elevation 1 foot above the top as follows:

a. For locations specified in Paragraph 3.2.2, use structural backfill.

b. Use common backfill in accordance with Paragraph 3.2.3 for all other locations.

3.2.4.6 Do not allow heavy construction equipment to pass over buried lines until at least 2 feet of backfill has been placed over the line or until bridging has been placed across trenching and has been approved by the Government's Representative.

3.3 INSTALLATION OF PLASTIC SHEET MARKER

3.3.1 Place plastic sheet marker continuous over all buried piping or conduit. Place marker tape directly over the line and 1 foot below finish grade. Place a marker over each of the outside pipes of multiple lines. Place intermediate markers at a maximum of 4 feet apart.

3.4 FINISH GRADING AND STABILIZATION

3.4.1 Rake the area disturbed by the work, remove surface stones larger than 6 inches and dispose of excess material and debris at an area designated by the Government's Representative.

3.4.2 Stabilize the area around the perimeter of the building (approximately 4 feet), with a 3 inch course of gravel meeting the requirements of Paragraph 2.1.5. Finish the stabilization course to the elevations shown on the Drawings.

3.5 TESTING

3.5.1 All sampling and testing of compacted fill and backfill will be performed by the Government's Representative.

# SOIL COMPACTION PROCEDURE

| | | | |
|---|---|---|---|
| Project No. | Project Title | | Date |
| Contract No. | Procedure No. | Location of Demonstration | |

**A**

| REQUIREMENTS | EQUIPMENT DEMONSTRATED |
|---|---|
| Applicable Spec./Dwg. | Type |
| Compaction Required % | Manufacturer |
| Maximum Lift Size | Model |

**B**

**LABORATORY SOIL TEST RESULTS**

| | |
|---|---|
| ☐ Non-granular Materials (WSDOT Test Method No. 609) | ☐ Granular Materials (WSDOT Test Method No. 606-A) |

**C**

**COMPACTION DEMONSTRATION TEST RESULTS**

Formula for Percent Compaction:

$$\frac{\text{dry density}}{\text{max density}} \times 100 = \text{Percent Compaction}$$

| No. of Passes | Depth of Lift | Percent Moisture | Lbs/ft$^3$ Dry | Maximum Density | Percent Compaction | Accept | Reject |
|---|---|---|---|---|---|---|---|
| | | | | | | | |
| | | | | | | | |
| | | | | | | | |
| | | | | | | | |
| | | | | | | | |
| | | | | | | | |
| | | | | | | | |

Observations or Comments

TEST METHOD USED FOR DEMONSTRATION

☐ Nuclear Gage (ASTM D2922 & D3017)

☐ Sand Cone (ASTM D1556)

Apparatus No. _____

☐ Other _____

**D**

| | | |
|---|---|---|
| Contractor Representative | | Date |
| Government Representative | | Date |

## INSTRUCTIONS

This Soil Compaction Procedure form, when approved by the Government Representative, constitutes an approved compaction procedure.

Section A is the responsibility of the Construction Contractor. It is to be completed at the time of backfill compaction demonstration and presented to the Government Representative.

Section B is completed by the Government Representative. Data entered is obtained from the agency that performs the laboratory testing.

Section C is completed by the Government Representative as the demonstration is performed. Using the applicable formula, the percent compaction achieved is determined and entered. Acceptance is based on the results as compared with the compaction percent required in Section A.

Section D is signed and dated by the Construction Contractor Representative acknowledging responsibility for this procedure and compliance thereto for applicable backfill operations. Section D is signed and dated by the Government Representative to signify approval.

END OF SECTION

SECTION 02650

PIPED UTILITIES

PART 1 - GENERAL

1.1 SUBMITTALS: Refer to Section 01300 for submittal procedures.

1.1.1 Leak/Pressure Test Procedures: Submit procedures outlining proposed methods of testing joints in piping systems.

1.1.2 Method for Disposal of Flushing Water: Prepare a method for disposal of flushing water.

PART 2 - PRODUCTS

2.1 PIPE AND FITTINGS

2.1.1 Piping and fittings for sanitary water shall be PVC meeting the requirements of ASTM D 2464 and ASTM D 2466, and the details on the drawing.

2.1.2 Pipe joint sealant shall meet the requirements of ASTM D 2564 and ASTM D 2855.

2.1.3 Piping for 6-inch sanitary sewer shall be PVC meeting the requirements of ASTM D 3034-SDR 35.

2.1.4 Perforated piping for 4-inch and smaller sanitary sewer shall be PVC meeting the requirements of ASTM D 2729.

PART 3 - EXECUTION

3.1 GENERAL

3.1.1 Keep piping systems clean during all phases of the work. Once fabrication has started on any length of pipe, plug or cap the open ends of the piping when erection is not in progress to prevent the entry of dirt and other foreign material.

3.1.2 Where piping is laid in a trench, the trench shall be free from frost or frozen earth and standing water.

3.2 POLYVINYL CHLORIDE (PVC) PIPE

3.2.1 Install piping and piping accessories in conformance with the manufacturer's written installation procedure, the Drawing, and this Specification.

3.2.2 For sanitary water pipe installation, provide thrust restraint at all tees, plugs, caps, and bends in accordance with NFPA 24, Article 8-6. For thrust block for pipe sizes less than 6 inches in diameter use thrust block for 4 inches in diameter pipe.

3.3 FLUSHING

3.3.1 After installation and immediately before pressure testing a completed system, and before connecting a completed system into any existing system; flush all piping with water for one minute, minimum, or until the effluent is clean and contains no visible particulate matter, but in no case for less than one minute.

3.3.2 Raw water may be used for flushing the sanitary sewer, use sanitary water for flushing sanitary waterlines.

3.3.3 Use a flushing velocity of at least 5 feet per second with the pipe full.

3.3.4 Provide documented evidence that flushing has been accomplished in accordance with this Specification. Deliver to the Government's Representative before leak/pressure testing.

3.4 HYDROSTATIC TESTING

3.4.1 Furnish all instruments, facilities, and labor required to conduct the tests.

3.4.2 Document leak/pressure testing of each piping system on "Leak/Pressure Test Certification" Form RL-F-6410.2 (sample appended) by preparing Section A of the form and signed by the Contractor Representative. Forms will be furnished by the Government's Representative.

3.4.3 Perform all leak tests as designated in the applicable pipe codes in the presence and to the satisfaction of the Government's Representative.

3.4.4 Perform tests before backfilling or application of exterior protective coating.

3.4.5 Before applying test pressure to piping, install any necessary restraining devices to prevent distortion or displacement of the piping.

3.4.6 Install one temporary relief valve during pressure testing of piping systems. The relief valve shall have a discharge capacity of not less than 125% of the capacity of the pressurizing device and shall be set to operate at not more than 110% of the test pressure. Demonstrate the proper operation of the relief valve to the Government's Representative at the following times: Before each series of leak tests before the relief valve is attached to the system; whenever the Government's Representative has cause to question the operating accuracy of the relief valve.

3.4.7 Coat all joints and connections of threaded lines with a mixture of powdered blue chalk and water or isopropyl alcohol, and allow to dry before filling piping with water and inspecting for leaks.

3.4.8 Test all other new piping for at least 30 minutes with no visible leaks or loss of test water. Examine all piping joints, fittings, and other potential leak sources carefully during testing. Repair all detectable leaks; re-examine by the same test method originally prescribed and retest.

3.4.9 If lines are subject to freezing, remove all water from lines immediately upon completion of the hydrostatic test.

3.4.10 Use the test pressures shown on the Pipe Codes Sheet.

3.5 DISINFECTION OF SANITARY WATERLINES

3.5.1 Disinfect sanitary waterlines in accordance with AWWA C601.

## PIPE CODE A

| Service: | Max Operating Pressure: | Test Pressure: | Max Operating Temp: |
|---|---|---|---|
| Sanitary Water | 120 psig | 180 psi | 100 F |

Sizes : 4" and smaller

Pipe : PVC 1120 per ASTM D 1785

Fittings : PVC, Schedule 80 per ASTM D 2464, or Schedule 40 per ASTM D 2466

## PIPE CODE B

| Service: | Max Operating Pressure: | Test Pressure: | Max Operating Temp: |
|---|---|---|---|
| Sanitary Sewer | - | Per Uniform Plumbing Code | 100 F |

Sizes : 4" and Smaller

Pipe : PVC, ASTM D 2729

## PIPE CODE C

| Service | Max Operating Pressure: | Test Pressure: | Max Oper Temp: |
|---|---|---|---|
| Sanitary Sewer | --- | Per Uniform Plumbing Code | 100 F |

Sizes : 6"

Pipe : PVC, ASTM D 3034-SDR 35

# LEAK/PRESSURE TEST CERTIFICATION

| Project No. | Work Order No./Shop Order No. | Report No. | Code or Standard |
|---|---|---|---|
| | | | |

| Class | Year | Addenda | Stamp ☐ Yes ☐ No | Const. Spec. | Rev. | Test Procedure Title & No. | Rev. |
|---|---|---|---|---|---|---|---|
| | | | | | | | |

Description of Component(s)

**CONTRACTOR PRE-TEST CHECK LIST**

Customer Representative Notified — Date _____ Time _____

Safety Representative Notified — Date _____ Time _____

| Item | Acceptance | Exception | Item | Acceptance | Exception |
|---|---|---|---|---|---|
| Flushing of component to be tested completed. | | | All lines not required for test disconnected or isolated. | | |
| Vents, openings, and relief valve discharge checked. | | | All test equipment checked for tightness. | | |
| Test medium per requirements. Medium _____ | | | Test medium temp. equalized. Temp. _____ (ASME Section III, VIII only) | | |
| Test set up in accordance with above referenced procedure. If exception, explain: | | | | | |
| Test gauge correct range and currently calibrated. Serial No. _____ Range _____ Calib. Due Date _____ | | | | | |
| Pressure relief valve properly set and currently calibrated. Serial No. _____ PSI Setting _____ Calib. Date _____ | | | | | |
| Areas to be inspected chalked prior to pressurization. If exception, explain: | | | | | |
| Soap solution applied to all areas examined while component was pressurized. No Leakage Found _____ Leaks Found and Repaired _____ | | | | | |
| Specified test pressure obtained. Pressure Specified _____ Hold Time Specified _____ Test Press. Obtained _____ A.M. P.M. | | | | | |
| CONTRACTOR REPRESENTATIVE ➤ | | | | Date | |

**INSPECTION VERIFICATION**

| | | |
|---|---|---|
| Actual test pressure during inspection _____ | All joints and welded attachments to pressure retaining components chalked/soaped as applicable. ☐ Yes ☐ No* | Pressure test: ☐ Accepted ☐ Rejected* |
| Specified hold time verified at _____ A.M. P.M. | All joints and welded attachments to pressure retaining components visually inspected for leakage. ☐ Yes ☐ No* | |

* Basis of Rejection and/or Comment:

| | |
|---|---|
| CUSTOMER REPRESENTATIVE ➤ | Date |
| WITNESS - ASME AUTHORIZED INSPECTOR ➤ | Date |



B-526-C1

RL-F-6410.2 (4-84)

## INSTRUCTIONS

1. THE FABRICATION OR CONSTRUCTION CONTRACTOR IS RESPONSIBLE TO FILL IN THE UPPER PORTION OF THE LEAK/PRESSURE TEST CERTIFICATION, INCLUDING THE CONTRACTOR PRE-TEST CHECK LIST SECTION. PORTIONS OR BLOCKS NOT APPLICABLE SHALL BE NA'd.

2. THE CONTRACTOR SHALL PRESENT THE LEAK/PRESSURE TEST CERTIFICATION TO THE CUSTOMER'S REPRESENTATIVE AT THE TIME OF TESTING.

3. THE CUSTOMER'S REPRESENTATIVE SHALL COMPLETE THE INSPECTION VERIFICATION SECTION OF THE LEAK/PRESSURE TEST CERTIFICATION AT THE TIME OF TESTING, AND THE RESULTS OF THE TEST WILL BE SO INDICATED. (THE ASME AUTHORIZED INSPECTOR SIGNATURE BLOCK WILL BE NA'd AS APPROPRIATE BY THE CUSTOMER'S REPRESENTATIVE.)

4. THE CUSTOMER'S REPRESENTATIVE WILL PROVIDE A COPY OF THE LEAK/PRESSURE TEST CERTIFICATION TO THE CONTRACTOR UPON COMPLETION OF THE TEST. THE ORIGINAL WILL BE RETAINED BY THE CUSTOMER FOR PERMANENT RECORD.

END OF SECTION

SECTION 02668

FIRE WATER SYSTEMS

PART 1 - GENERAL

1.1 SUBMITTALS: Refer to Section 01300 for submittal procedures.

1.1.1 Approval Data: Submit the information requested in Column 5 of the Vendor Data List in this section.

1.1.2 Certified Vendor Information (CVI): Submit the information listed in Column 6 of the Vendor Data List in this section.

1.1.3 NFPA Test Certificate: Submit a completed Contractor's Material and Test Certificate in accordance with NFPA 13, Section 1-12.

PART 2 - PRODUCTS

2.1 GENERAL

2.1.1 All components of the new underground fire protection system, if not designated in this Specification and the Drawings by a manufacturer's name and model or figure number, shall be current products of the manufacturer and shall be FM approved or UL listed for the intended use.

2.1.2 The system is designed for a maximum operating pressure of 125 psig.

2.2 PIPING

2.2.1 Pipe, pipe joints, and fittings shall meet the requirements of NFPA 24, the Drawings, and this Specification.

2.2.2 Pipe shall be cement-lined, meeting the requirements of AWWA C104 and be ductile iron, Class 50 (minimum) meeting the requirements of AWWA C151. Pipe shall have rubber-gasketed, mechanical joints or push-on joints meeting the requirements of AWWA C111.

2.2.3 Fittings shall be cement-lined, meeting the requirements of AWWA C104, with joints and pressure class ratings compatible with the pipe used and shall meet the requirements of AWWA C110.

2.3 POST INDICATOR VALVE (PIV)

2.3.1 The gate valve shall be a nonrising stem valve with an indicator post flange. The valve shall open in counterclockwise direction.

2.3.2 The indicator post shall be of the adjustable, telescoping barrel type with locking handle and shall have clearly visible, position indicator sign plates, protected by nonbreakable plastic windows. The indicator post shall be matched for assembly to the gate valve.

2.3.3 The valve position supervisory limit switch for installation on the post indicator valve shall be tamperproof. The switch shall be operated during the first two revolutions of the handle in the closing direction.

2.4 POST INDICATOR VALVE (PIV) WITH TAPPING SLEEVE

2.4.1 The tapping sleeve and post indicator gate valve shall be provided as a unit.

2.4.2 The gate valve shall be a nonrising stem valve with an indicator post flange. The valve shall open in the counterclockwise direction.

2.4.3 The indicator post shall be of the adjustable, telescoping barrel type with locking handle and shall have clearly visible, position indicator sign plates, protected by nonbreakable plastic windows. The indicator post shall be matched for assembly to the gate valve.

2.4.4 The valve position supervisory limit switch for installation on the post indicator valve shall be tamperproof. The switch shall be operated during the first two revolutions of the handle in the closing direction.

2.5 FIRE HYDRANTS

2.5.1 Fire hydrants shall meet the requirements of AWWA C502 and be dry barrel type with compression type main valve which opens against pressure. Inlets shall be 6 inches with a minimum 5 inch valve opening. The hydrants shall have one 4-1/2 inch pumper nozzle and two 2-1/2 inch hose nozzles, including caps and chains. Nozzle threads shall be National Standard Fire Hose Coupling Threads in accordance with NFPA 1963. The hydrant operating nut and cap nuts shall be National Standard Pentagon in accordance with AWWA C502 and shall open in the counterclockwise direction. Stem seals shall be the O ring type.

2.6 HYDRANT CONNECTION VALVE: Hydrant connection valve shall be a 6 inch gate valve meeting the requirements of AWWA C500 and be provided with an adjustable cast iron valve box.

2.7 REFLECTIVE SHEETING: 6 inch wide reflective sheeting for placement around the fire hydrant body shall be Scotchlite No. 3270 silver "Wide-Angle Flat Top", adhesive coated.

2.8 DRAINAGE MATERIAL FOR FIRE HYDRANT BASE: 3/8 inch to 1 inch clean crushed rock or gravel.

2.9 BITUMASTIC: Koppers No. 550 or Superservice black.

2.10 PAINTING MATERIALS

2.10.1 Primer: FS TT-P-645, (alkyd type zinc chromate) National Lead No. 200-41.

2.10.2 Paint: FS TT-E-489, Class A, Composition G.

PART 3 - EXECUTION

3.1 INSTALLATION

3.1.1 Install piping and piping accessories in accordance with NFPA 24, AWWA C600, the Drawings, and this Specification.

3.1.2 Protect pipe and fittings from impact shocks and dropping. Immediately before laying, inspect the pipe and discard damaged components. Remove the damaged components from the job site.

3.1.3 Keep piping systems clean during all phases of the work. Once fabrication has started on any length of pipe, plug or cap the open ends of the piping when erection is not in progress to prevent the entry of dirt and other foreign material. Inner surfaces of all pipe, valves, and fittings shall be smooth, clean, and free from sand, debris, and dirt when installed.

3.1.4 Where piping is laid in a trench, the trench shall be free from frost or frozen earth and standing water.

3.1.5 Install restraints on pipe and piping components in accordance with NFPA 24, Articles 8-6 and A-8-6.2. Restraining mechanical joints as listed in the UL Fire Protection Equipment Directory may be substituted for conventional anchoring. Where thrust blocks are used, make the bearing area equal to the area shown in Table 8-6.2.9, multiplied by a factor of 1.33.

3.1.6 Coat all carbon steel accessories which will be buried, such as tie-rods and clamps, with bitumastic. Allow time for bitumastic to dry before backfilling.

3.1.7 Install fire hydrants and hydrant sectionalizing valves in accordance with AWWA C600 and NFPA 24.

3.1.8 Install post barricades around fire hydrants and post indicator valves in accordance with the Drawings.

3.1.9 Excavation, backfill, and grading work shall meet the requirements of Section 02200 of this Specification as it applies.

3.1.10 Place drainage material at the base of the fire hydrant in accordance with AWWA C600, Section 3.7. The interface between the drainage material and compacted earth fill shall be separated by a layer of 30 pound roofing paper.

3.1.11 The fire hydrant base pad shall bear on undisturbed or compacted earth and shall be a minimum 16 inch diameter or square by 4 inch thick precast concrete.

3.1.12 The centerline of the fire hydrant pumper nozzle shall be between 18 and 22 inches above the adjacent finished grade. Orient the pumper toward the roadway or street.

3.1.13 Paint the entire fire hydrant with one coat of primer meeting the requirements of FS TT-P-645, and two coats of safety yellow enamel meeting the requirements of FS TT-E-489. Colors shall be as defined in ANSI Z53.1. Place a reflective sheeting band around the body of the fire hydrant immediately below the pumper nozzle.

3.2 FLUSHING AND TESTING

3.2.1 General

3.2.1.1 Furnish all equipment and instruments required to perform the flushing and testing.

3.2.1.2 Perform all flushing and testing while being witnessed by the Government's Representative.

3.2.1.3 Remove and replace or repair apparatus, material, or work which fails in flushing or testing operations and repeat the operation.

3.2.1.4 Repair any damage resulting from flushing or testing.

3.2.2 Flushing

3.2.2.1 Flush all new piping in accordance with NFPA 24, Article 8-8.

3.2.2.2 Prepare the method for disposal of flushing water. Deliver to the Government's Representative for approval before flushing.

3.2.2.3 Provide documented evidence that flushing has been accomplished in accordance with this Specification. Deliver to the Government's Representative before testing.

3.2.3 Hydrostatic Testing

3.2.3.1 Perform testing in accordance with NFPA 24, Article 8-9. A relief valve will be required. SC-12

3.2.3.2 Perform testing after piping has been flushed and before backfill is placed over pipe joints.

3.2.3.3 Verify that all air has been expelled from piping before applying the hydrostatic pressure.

3.2.3.4 Examine all piping joints, fittings, and other potential leak sources carefully during the test. Leaks in the piping system are not acceptable. Repair all leaks and retest.

3.2.3.5 If the piping system is subject to freezing, remove all water from the lines immediately upon completion of the tests.

3.3 DISINFECTING

3.3.1 Arrange for bacteriological testing of water samples with the Government's Representative before performing disinfection procedures. The

bacterial analysis is four days in length from the time samples are received in the laboratory. The analysis provides "presumptive" results in two days with "confirmation" at the end of the test.

3.3.2 Disinfect sanitary waterlines in accordance with AWWA C601.

Project No. B-526

Title: Non-Radioactive Hazardous Chemical Waste Facility

**KAISER ENGINEERS HANFORD**

## VENDOR DATA LIST

("X" Indicates Required Data)

| 1 EPN Identification | 2 Description | 3 Reference Drawing | 4 Specification Paragraph | 5 Approval/Data: Dimensional Drawings | Equipment Weights | Specifications | Material Description | Performance Data | Circuit or Control Diagrams | Data Sheets | Illustrative Cuts | Installation Instructions | 6 Certified Vendor Information (CVI): Dimensional Drawings | Equipment Weights | Specifications | Certified Test Data | Circuit or Control Diagram | Instructions: Installation | Operation | Maintenance | Spare Parts List | 7 Remarks |
|---|---|---|---|---|---|---|---|---|---|---|---|---|---|---|---|---|---|---|---|---|---|---|
| 1 | Post Indicator Valve (PIV) | | 2.3 | | | | | | | | X | | | | | | | | | | | |
| 2 | Post Indicator Valve (PIV) with Tapping Sleeve | | 2.4 | | | | | | | | X | | | | | | | | | | | |
| 3 | Fire Hydrant | | 2.5 | | | | | | | | X | | | | | | | | | X | X | |
| 4 | Hydrant Connection Valve with Valve Box | | 2.6 | | | | | | | | X | | | | | | | | | | | |
| 5 | Pipe | | 2.2 | | | X | | | | | X | | | | | | | | | | | |

END OF SECTION

4153K/0245K

02668 - 6

B-526-C1

DOE Richland

KE (3-82)

SECTION 03300

CAST-IN-PLACE CONCRETE

PART 1 - GENERAL

1.1 SUBMITTALS: Refer to Section 01300 for submittal procedures.

1.1.1 Form Coating Materials: Submit proposed form coating materials in accordance with ACI 301, Section 4.4.

1.1.2 Reinforcing Steel Drawings: Submit complete reinforcing fabrication and placing drawings based on the block diagram in accordance witn ACI 301, Section 5.1, including splices not shown on contract drawings.

~~1.1.3 Block Diagram: Submit a block diagram of scheduled concrete pours. Identify all pours.~~ DT #8

1.1.4 Concrete Materials, Mix Design, and Mix Proportions: Submit the concrete materials, mix design, and mix proportions in accordance with ACI 301, Sections 3.8 and 16.7.3. Define each of the materials to be used in the concrete and state the amount, by weight, to be utilized per cubic yard of plastic mix.

1.1.5 Curing Procedure: Submit description of materials and methods of curing in accordance with ACI 301, Section 12.2.

PART 2 - PRODUCTS

2.1 CONCRETE

2.1.1 Cement: ASTM C 150, Type II (Low Alkali).

2.1.2 Aggregates: ASTM C 33, maximum size 1-1/2 inch.

2.1.3 Air-Entraining Admixture, Meeting the Requirements of ASTM C 260: Sika Chemical Company "SIKA AER", Chem-Masters Corp "Adz-Air" or Protex Industries "Protex".

2.1.4 Properties

2.1.4.1 Minimum allowable compressive strength: 3000 psi at 28 days.

2.1.4.2 Slump: 4 inch maximum in accordance with ACI 301, Section 3.5.

2.1.4.3 Air content: In accordance with ACI 301, Table 3.4.1.

2.1.4.4 Proportions: In accordance with ACI 301, Section 3.8, Method 2 or 3.

2.1.5 Mixing: In accordance with ASTM C 94.

2.1.6 Delivery: In accordance with ASTM C 94.

2.2 REINFORCING STEEL

2.2.1 Steel Bars: ASTM A 615, deformed, Grade 60.

2.2.2 Welded Wire Fabric: ASTM A 185.

2.2.3 Tie Wire: Black annealed steel, 16 gauge minimum.

2.3 JOINT MATERIALS

2.3.1 Expansion Joint Filler: See Section 07920.

2.3.2 Sealant: ~~See Type II, Section 07920.~~ See Building Sealant, Section 07920 DFC #8

2.4 NONSHRINK GROUT

2.4.1 Nonmetallic Type: "Five Star Grout" by US Grout Corp; "Por-Rok" Anchoring Cement by Hallemite; or "Masterflow 713" by Master Builders.

2.5 FORMS: Wood, steel, plywood, or Masonite Corporation "Concrete Form Presdwood", as required for the various specified finishes.

PART 3 - EXECUTION

3.1 FORM CONSTRUCTION AND REMOVAL

3.1.1 Install formwork in accordance with ACI 301, Section 4.2. The interior shape and rigidity shall be such that the finished concrete will meet the requirements of the Drawings within the tolerances specified in ACI 301, Table 4.3.1.

3.1.2 Prepare form surfaces in accordance with ACI 301, Section 4.4.

3.2 REINFORCING STEEL

3.2.1 Fabricate reinforcing bars accurately to the dimensions shown on the Drawings, within the tolerances shown in ACI 301, Section 5.4.

3.2.2 Place reinforcing steel as shown on the approved submittals within the tolerances specified in ACI 301, Sections 5.4 and 5.5.

3.2.3 Tie all bars securely to prevent displacement during placement of concrete.

3.2.4 Do not force reinforcing bars into concrete after initial set has started.

3.2.5 Place reinforcing with the dimension of concrete protection equal to the minimum given in ACI 301, Section 5.5, except where shown otherwise on the Drawings.

3.2.6 Place welded wire fabric on chairs and lap two mesh at splices. Tie splices with wire.

3.3 CONCRETE

3.3.1 Before ordering concrete, obtain approval of required submittals.

3.3.2 Before concrete is batched, obtain approval of formwork and reinforcement by the Government's Representative.

3.3.3 Before Placing Concrete

3.3.3.1 Obtain approval of the "Pour Slip" by the Government's Representative. "Pour Slip" shall include the appropriate reference to the specific portion of the structure to be placed, the maximum size of coarse aggregate, the design strength, the admixture, and the slump. "Pour Slip" forms can be obtained from the Government's Representative.

3.3.3.2 For each truck load of concrete, deliver "Trip Ticket" to the Government's Representative. The "Trip Ticket" shall contain the information listed in ASTM C 94, Subparagraphs 16.1.1 through 16.1.10, and shall include water/cement ratio.

3.3.4 Place concrete in accordance with ACI 301, Sections 8.1, 8.2, and 8.3. Do not drop (free fall) more than 5 feet. Insert the vibrator (vertically if possible) into the concrete and reach a small distance into the concrete in the next lower layer. Do not insert vibrators into lower courses that have reached initial set. Take care to avoid allowing the head of vibrator to come in contact with forms or embedded items.

3.3.5 Temper concrete only as permitted in ACI 301, Section 7.5.

3.3.6 Place nonshrink grout where shown on the Drawings and in accordance with the manufacturer's written instructions.

3.3.7 Weather Conditions: Protect concrete during placement in accordance with ACI 301, Section 8.4.

3.3.8 Construction Joints: Make construction joints in accordance with ACI 301, Section 6.1, and as detailed on the Drawings.

3.3.9 Embedded Items: Install embedded items in accordance with ACI 301, Sections 6.4 and 6.5.

3.3.10 Expansion Joints: Locate expansion joints as shown on the Drawings and construct with premolded expansion joint filler and sealant.

3.3.11 Placing Concrete Against Earth: Place concrete only upon or against firm, damp surfaces free from frost, ice, and free water. Do not place concrete until the required compaction has been obtained. Dampen earth surfaces to receive fresh concrete.

3.3.12 Consolidation: Consolidate concrete slabs in accordance with ACI 301, Section 11.6.

3.4 REPAIRING CONCRETE

3.4.1 Cracks or defects in the concrete surfaces which may compromise the ability of the surfaces to retain liquids shall be repaired.

3.4.1.1 Place concrete repair mortar within one hour after mixing. Do not retemper the mortar.

3.4.1.2 Immediately after removal of forms, cut back all form ties and inspect concrete surfaces for defects. Repair only after permission for patching is given by the Government's Representative.

3.4.2 Repair of Surface Defects: Repair surface defects in concrete in accordance with ACI 301, Sections 9.1, 9.2, and 9.3. Cure concrete repairs the same as new concrete.

3.5 CONCRETE FINISHES AND TOLERANCES

3.5.1 Formed Surfaces

3.5.1.1 Start the finishing of concrete immediately following concrete repair and complete said finishing within 96 hours after the forms have been removed. Finish formed surfaces in accordance with the sections of ACI 301 noted below:

| | | |
|---|---|---|
| a. | Formed surfaces exposed to earth backfill | Section 10.2.1 |
| b. | Formed interior surfaces | Section 10.2.2 |
| c. | Formed exterior surfaces exposed to weather | Section 10.2.2 |
| d. | Related unformed surfaces | Section 10.5 |
| e. | Tolerances for formed surfaces | Section 4.3.1 |

3.5.2 Unformed Surfaces

3.5.2.1 Finish unformed surfaces in accordance with the sections of ACI 301 noted below:

| | | |
|---|---|---|
| a. | Surfaces of interior floors | Section 11.7.3 |
| b. | Surfaces of exterior equipment slabs | Section 11.7.3 |
| c. | Exterior slabs subject to foot traffic | Section 11.7.4 |

3.6 CURING AND PROTECTION

3.6.1 Cure concrete in accordance with ACI 301, Section 12.2. Clear curing compounds shall be tinted or applied surfaces marked to delineate extent of spraying.

3.6.2 Do not use curing compound on concrete surfaces which are to receive flooring or special protective coating.

3.6.3 Protect concrete during extreme weather conditions in accordance with ACI 301, Section 12.3.

3.6.4 Protect concrete from mechanical injury in accordance with ACI 301, Section 12.4.

3.7 CONCRETE TESTING

3.7.1 Sampling and testing of concrete will be the responsibility of the Government's Representative. The concrete will be tested in accordance with ACI 301, Sections 16.3.4, 16.3.5, 16.3.6, and 16.3.8.

END OF SECTION

SECTION 03419

PRECAST PRESTRESSED CONCRETE SECTIONS

PART 1 - GENERAL

1.1 SUBMITTALS: Refer to Section 01300 for submittal procedures.

1.1.1 Fabrication Drawings: Prepare and submit complete drawings and calculations for the prestressing and erection methods, materials, and equipment. Drawings shall indicate the plan, elevations, and sections of all units, and shall show the methods and sequence of stressing, including specifications and details of prestressing steel and anchoring devices, anchoring stresses, type of enclosure, arrangement of prestressing steel, erection procedures, location of pick-up points for handling, and details of pick-up devices.

1.1.2 Concrete Materials and Mix Design: Define each of the materials to be used in the concrete and state the amount, by weight, to be utilized per cubic yard of plastic mix.

1.1.3 Record of Tests: Maintain and submit the records of all tests performed to determine the properties of the materials to be used in the concrete.

1.2. PRODUCT DESIGN CRITERIA

1.2.1 Structural Loads

1.2.1.1 Roof live loads: 20 psf.

1.2.1.2 HVAC unit loads on the roof in accordance with the Drawings.

1.2.1.3 Wind load: 25 psf.

1.2.1.4 Seismic: UBC Zone 2.

1.2.1.5 Internal building pressure: The north side of Class 1A flammable liquids cell area is to be designed for 200 psf internal pressure.

1.2.1.6 Walls: Wall panels shall be insulated as shown on the Drawings. Insulation shall be R-13 or greater.

1.3 PRODUCT DELIVERY AND HANDLING

1.3.1 Precast concrete members shall be lifted and supported during manufacturing, stockpiling, transporting, and erecting operations only at the lifting or supporting points, or both, as shown on the Fabricator Drawings, and with approved lifting devices. All lifting devices shall have a minimum safety factor of 4.

PART 2 - PRODUCTS

2.1 GENERAL

2.1.1 Each of the aggregates, cement, water, and admixtures shall be supplied by a single source capable of producing a consistent quality within the quantity of materials required for the project. Aggregates, cement, and admixtures shall each have been produced by the same manufacturer and shall, when the quantity required is less than one batch or mix, be from the same batch or mix. The type, brand, and source of supply of the ingredients of the concrete will not be changed without prior written approval of the Government's Representative.

2.1.2 Design precast prestressed concrete sections in accordance with ACI 318.

2.2 MATERIALS

2.2.1 Portland Cement: ASTM C 150, Type I or III.

2.2.2 Admixtures

2.2.2.1 Air-entraining admixtures: ASTM C 260.

2.2.2.2 Water reducing, retarding, accelerating admixtures: ASTM C 494.

2.2.3 Aggregates: ASTM C 33.

2.2.4 Water: Potable or free from foreign materials in amounts harmful to concrete and embedded steel.

2.2.5 Reinforcing Steel

2.2.5.1 Bars: Deformed billet steel, ASTM A 615.

2.2.5.2 Wire Fabric: Welded steel, ASTM A 185.

2.2.6 Strand: Uncoated, 7-wire, stress-relieved strand; ASTM A 416, Grade 250K or 270K.

2.2.7 Anchors and Inserts

2.2.7.1 Materials: Structural steel, ASTM A 36.

2.2.8 Grout

2.2.8.1 Cement grout: Portland cement, sand and water sufficient for placement and hydration. Minimum strength of 3000 psi at 28 days.

2.2.8.2 Nonshrink grout: Nonmetallic type; "Five Star Grout" by US Grout Corp, "Por-Rok" Anchoring Cement by Hallemite, or "Masterflow 713" by Master Builders.

2.2.9 Welded Studs: In accordance with AWS D1.1.

2.3 CONCRETE MIXES

2.3.1 28 Day Compressive Strength: 5000 psi, minimum.

2.3.2 Release Strength: 4000 psi, minimum.

2.3.3 Use of calcium chloride, chloride ions, or other salts is not permitted.

2.4 MANUFACTURE

2.4.1 Manufacturing procedures shall be in accordance with PCI MNL-116. The manufacturer shall be a registered PCI Plant, certified by the plant certification program prior to start of production.

2.4.2 Manufacturing tolerances shall meet the requirements of PCI MNL-116.

2.4.3 Finishes

2.4.3.1 Standard underside: Resulting from casting against approved forms using good industry practice in cleaning of forms, design of concrete mix, placing and curing. Small surface holes, caused by air bubbles, normal color variations, normal form joint marks, and minor chips and spalls will be tolerated, but no major or unsightly imperfections, honeycomb, or other defects will be permitted.

2.4.3.2 Standard top: Result of vibrating screed and additional hand finishing at projections. Normal color variations, minor indentations, minor chips and spalls will be permitted. No major imperfections, honeycomb, or defects will be permitted.

2.4.3.3 Exposed vertical ends: Strands shall be recessed and the ends of the member shall receive sacked finish.

2.4.4 Openings: The manufacturer shall provide openings as shown on the Drawings.

2.4.5 Patching: Patching will be acceptable, providing the structural adequacy of the product and the appearance are not impaired.

2.4.6 Fasteners: The manufacturer shall cast in structural inserts, bolts, and plates as detailed or required by the Drawings.

PART 3 - EXECUTION

3.1 ERECTION

3.1.1 Installation: Installation of precast prestressed concrete shall be in strict accordance with approved Fabrication Drawings and shall be performed by the manufacturer or an erector with 5 years of similar installation experience. Members shall be lifted by means of suitable lifting devices at points provided by the manufacturer. Temporary shoring and bracing, if necessary, shall be in accordance with the manufacturer's written instructions.

3.1.2 Alignment: Members shall be properly aligned and leveled as required by the approved Fabricator Drawings. Variations between adjacent members shall be reasonably leveled out by jacking, loading, or any other feasible method in accordance with the manufacturer's written instructions and acceptable to the Government's Representative.

3.1.3 Grouting: Grout joints between wall panel edges (interior surfaces only). DFC #

3.1.4 Caulking: Caulk joints between wall panel edges (exterior surfaces only) using backer rod per Section 07920, Sealants and Caulkings. The caulking material shall be Sonoplastic NP1 or Sonoplastic NP2 manufactured by Sonneborn. Standard manufacturer color shall closely match with the precast concrete panels.

3.2 FIELD WELDING

3.2.1 Field welding shall be done by qualified welders using equipment and materials compatible to the base material. Weld structural steel in accordance with AWS D1.1 and reinforcing steel in accordance with AWS D1.4. *Personnel and procedures for welding structural steel shall have been qualified in accordance with AWS D1.1 before welding. Qualification in accordance with ASME Section IX may be substituted for this requirement. Personnel and procedures for welding reinforcing steel shall have been qualified in accordance with AWS D1.4 before welding. Visual weld examination and acceptance criteria for structural steel welds and reinforcing steel welds shall meet the requirements of AWS D1.1 and AWS D1.4, respectively. *SC-12*

END OF SECTION

SECTION 04220

CONCRETE UNIT MASONRY

PART 1 - GENERAL

1.1 SUBMITTALS: Refer to Section 01300 for submittal procedures.

1.1.1 Method to Heat Masonry Units: Submit a written description of the methods proposed to heat masonry materials and protect masonry from freezing.

PART 2 - PRODUCTS

2.1 HOLLOW CONCRETE MASONRY UNITS

2.1.1 Provide units meeting the requirements of ASTM C 90, Grade N, Type I, with half pumice aggregate and half sand aggregate.

2.1.2 Use nominal 8 by 8 by 16 inch or 12 by 8 by 16 inch size as required with standard smooth face and natural gray color. Furnish all special shapes shown on the Drawings; including closures, jambs, headers, lintels, and bond beam units, as required to complete the work.

2.2 MORTAR: ASTM C 270, Type M.

2.3 GROUT: ASTM C 476, Type PL.

2.4 REINFORCEMENT

2.4.1 Horizontal Mortar Joints: Fabricated from steel wire meeting the requirements of ASTM A 82; deformed 3/16 inch side rods and 9 gauge cross wires in truss pattern sized for nominal 8-inch and 12-inch walls; manufactured by Durowal Products "Durowal", Southern Wire Mesh Co "Bet-R-Wal", or AA Wire Products Co "Blok-Lok" with zinc coating in accordance with Paragraph 2.7.1.

2.4.2 Steel Bars: ASTM A 615, deformed, Grade 60.

2.5 ANCHOR BOLTS: ASTM A 307.

2.7 ANCHORS, TIES, AND CENTERING DEVICES

2.7.1 Wire Devices: Factory fabricated from steel wire meeting the requirements of ASTM A 82.

2.7.2 Centering clips shall be formed from not lighter than 9 gauge wire. Clips shall be of a design that will prevent displacement of the reinforcing bars during the course of construction.

2.7.3 Wire anchors for use with embedded slots or wire inserts shall be formed from not lighter than 9 gauge wire, looped and closed.

2.7.4 Dovetail anchors, where noted on the Drawings, shall be not lighter than 16 gauge steel at least 1 inch wide, crimped, corrugated, or bent at the end to provide anchorage, and shall be hot-dip zinc coated in accordance with ASTM A 153, Class B-2.

PART 3 - EXECUTION

3.1 HANDLING AND STORAGE

3.1.1 Deliver masonry units to the job site in air-dry condition. Handle, store, and protect masonry units to avoid chipping, breakage, contact with soil or contaminating material, and exposure to the elements. Anchors, ties, and joint reinforcement shall be free of loose scale and rust.

3.2 MORTAR: Mix Type M mortar in accordance with ASTM C 270.

3.3 COARSE GROUT: Mix 2000 psi (minimum) compressive strength grout in accordance with ASTM C 476.

3.4 ERECTION

3.4.1 Lay only clean and surface dry units. Do not use frozen or saturated units. Lay masonry plumb, true to line, with level courses accurately spaced. Keep bond pattern, corners and reveals plumb and true throughout. Vertical joints shall be shoved tight. Adjust each unit to final position while mortar is still plastic. Remove all units that are disturbed after mortar has stiffened and re-lay with fresh mortar. Units used in exposed surfaces or in walls and partitions to be painted shall be free from chipped edges or other imperfections detracting from the appearance of the finished work.

3.4.2 Hot Weather Installation

3.4.2.1 Protect masonry, erected when the ambient temperature is more than 99 F or when winds are in excess of 10 miles per hour from these elements during erection and for 48 hours following.

3.4.2.2 During hot, windy, or dry weather moisten the masonry units to prevent excessive absorption of water in the mortar.

3.4.3 Cold Weather Installation

3.4.3.1 Do not erect masonry if the temperature is below 40 F until the proposed methods to heat masonry materials and to protect masonry from freezing have been approved by the Government's Representative.

3.4.3.2 Maintain masonry unit temperature of 30 F, minimum, when laid. Maintain mortar and grout temperature between 70 F and 110 F. Temperature of mixing water or of water and sand introduced to cement shall not exceed 160 F. Maintain air temperature on both sides of the masonry above 40 F for at least 48 hours. When temperatures are below 20 F, do not lay masonry.

3.4.4 Wherever possible, use full units of the proper size instead of cut units. Cutting and fitting, including that required to accommodate the work of others shall be done by masons using power masonry saws. Concrete masonry units may be either wet or dry cut. Dry wet cut units, before being placed in the work, to the same surface-dry appearance as uncut units being laid in the wall. Cut edges shall be clean, true, and sharp. Make openings carefully so that wall plates, cover plates, or escutcheons required by the installation will completely conceal the openings and have bottoms aligned with the masonry joints. Use of broken units is prohibited.

3.4.5 Set masonry units in full bed of mortar under both face shells and webs at starting courses on foundation walls and where cells are filled with grout or concrete. Lay all other blocks in shell mortar bedding.

3.4.6 Strike off all mortar joints flush. Compact all joints exposed to view or scheduled for painting with a shallow, oval-faced, grooving tool, after the mortar has taken an initial set.

3.4.7 Reinforce horizontal joints in masonry walls at every other course. Lap reinforcement side rods 6 inches at all splices. Use prefabricated reinforcement at corners or hook and side lap the side rods.

3.4.8 Reinforce vertical cores where shown on the Drawings. Install vertical reinforcing steel full height of the masonry wall. Make splices bar-to-bar and bar-to-dowel lapping at least 30 diameters and tie with wire.

3.4.9 Install structural steel framed openings and doorways as masonry walls are erected. Shore all openings which are more than three feet wide.

3.4.10 Fill spaces around metal door frames and other built-in items solid with mortar. Fill cells receiving anchor bolts; and cells of first masonry course below bearing plates solid with grout.

3.4.11 Where the Drawings call for cores to be filled or reinforced:

3.4.11.1 Vertical cores shall have vertical alignment sufficient to maintain a clear, unobstructed continuous opening not less than 3 inches by 3 inches.

3.4.11.2 Fill cores with coarse grout.

3.4.11.3 Rod the grout in solid to eliminate honeycomb.

3.4.11.4 Fill the cores in lifts no greater than 6 courses high.

3.4.11.5 When the grouting is stopped for one hour or longer, form horizontal construction joints by stopping the pour of grout not less than 1/2 inch below the top of the uppermost unit grouted.

3.4.11.6 Fully embed horizontal steel by grout in an uninterrupted pour.

3.4.12 Make bond beams with loadbearing units filled with coarse grout and continuous reinforcement. Lap reinforcement 30 bar diameters or 12 inches, whichever is greater where splices are required for continuity. Maintain a minimum clearance of 1/2 inch between reinforcement and interior faces of units.

3.4.13 Unless shown otherwise on Drawings, intersecting walls shall be tied together with a metal tiebar 1/4 inch thick, 1-1/4 inches wide, and 28 inches long, with 2 inch right angle bends on each end. Tiebars shall be placed in alternate courses in the wall with the bends at the ends of the tiebars embedded in cores filled with grout.

3.4.14 Clean masonry walls after mortar has set. Remove excess mortar and mortar stains by scrubbing with a stiff fiber brush and clean water.

3.5 PROTECTION

3.5.1 Cover masonry to protect it from frost, ice, and snow and to prevent collection of moisture in the core of the wall. Protect all corners subject to damage.

END OF SECTION

SECTION 05120

STRUCTURAL STEEL

PART 1 - GENERAL

1.1 SUBMITTALS: Refer to Section 01300 for submittal procedures.

1.1.1 Fabrication and Erection Drawings: Submit fabrication drawings, erection diagrams, and bills of material for all structural steel framing.

1.2 QUALIFICATION OF WELDING PERSONNEL AND PROCEDURES

1.2.1 Personnel and procedures for welding structural steel shall have been qualified in accordance with AWS D1.1 before welding. Qualification in accordance with ASME Section IX may be substituted for this requirement.

1.2.2 Maintain a file of welding procedure specifications, procedure qualification records, and welder performance qualification test results at the job site for review at any time by the Government's Representative.

1.3 PRODUCT HANDLING AND STORAGE

1.3.1 Deliver anchor bolts and other anchorage devices which are to be embedded in concrete or masonry construction to the project site in time to be installed before the start of concrete operations or masonry work.

1.3.2 Provide setting drawings, templates, and directions for the installation of the anchor bolts and other devices which are to be embedded.

1.3.3 Store structural steel members at the project site above ground on platforms, skids, or other supports.

1.3.4 Protect steel from corrosion.

1.3.5 Store materials in a weathertight and dry place, until ready for use in the work.

1.3.6 Store packaged materials in their original unbroken package or container.

PART 2 - PRODUCTS

2.1 MATERIALS

2.1.1 Rolled Steel Shapes and Plates: ASTM A 36.

2.1.2 Steel Bars and Rods: ASTM A 108, minimum yield 36,000 psi, maximum carbon content 0.35%.

2.1.3 Steel Pipe: ASTM A 53, Type E or S, Grade B.

2.1.4 Fasteners

2.1.4.1 Bolts:

a. For general application: ASTM A 307, Grade A or B, except that the requirement for bolt head marking is waived.

b. For all permanent structural steel column and beam connections: ASTM A 325, Type 1 or 2, galvanized; or ASTM A 490, Type 1 or 2.

2.1.4.2 Nuts:

a. For ASTM A 307 bolts: ASTM A 563, Grade A, heavy hex.

b. For ASTM A 325 bolts: ASTM A 563, Grade C, plain, heavy hex.

c. For ASTM A 325 galvanized bolts: ASTM A 563, Grade DH, galvanized, heavy hex.

d. For ASTM A 490 bolts: ASTM A 563, Grade DH, heavy hex.

2.1.4.3 Washers for ASTM A 325 or ASTM A 490 Bolts: ASTM F 436, circular washers.

2.1.4.4 Expansion Anchors: Hilti Kwik-Bolt or HDI drop-in anchors.

2.1.4.5 Weld Studs: Nelson Stud Welding Company, Type H4L.

2.1.5 Nonshrink Grout: Nonmetallic type, "Five Star Grout" by US Grout Corp; "Por-Rok" Anchoring Cement by Hallemite; or "Masterflow 713" by Master Builders.

2.1.6 Paint: See Section 09900.

PART 3 - EXECUTION

3.1 GENERAL

3.1.1 Fabricate and erect structural steel in accordance with the AISC "Specification for the Design, Fabrication and Erection of Structural Steel for Buildings", except that welding shall be in accordance with this Specification.

3.1.2 Perform welding in accordance with AWS D1.1.

3.1.3 Visual weld examination and acceptance criteria shall meet the requirements of AWS D1.1, paragraph 6.5.5. SC-12

3.2 FABRICATION

3.2.1 Fabricate structural steel for close fit, with erection holes aligned within the tolerances given in the AISC Specification noted in Paragraph 3.1.1 above.

3.2.2 Fabricate beam-to-column and beam-to-beam connections in accordance with the AISC "Manual of Steel Construction", Part 4 (Connections) and Table I, or Table I in combination with Table III. Connections shall be high-strength-bolted or welded unless otherwise noted on the Drawings.

3.2.3 One-sided or other type of eccentric connections will not be permitted except where shown on the Drawings.

3.2.4 Fabricate welded connections in accordance with Table IV, Part 4, of the AISC "Manual of Steel Construction".

3.2.5 Mill the ends of columns square at splices and base plates.

3.2.6 Install weld studs in accordance with the manufacturer's written instructions.

3.2.7 Use E70XX electrodes for welding.

3.3 SHOP PAINTING

3.3.1 Prepare and prime coat steel in accordance with Section 09900.

3.3.2 Do not apply primer to surfaces within 3 inches of welds before welding.

3.3.3 Do not apply primer to contact surfaces within friction-type joints.

3.4 ERECTION

3.4.1 Do not use oxy-fuel cutting for correcting fabrication errors on any major member in the structural framing. Holes shall not be made or enlarged by oxy-fuel cutting. Oxy-fuel cutting will be permitted only on minor members and only after permission of the Government's Representative is obtained.

3.4.2 Contact surfaces within friction-type joints shall be free from oil, paint, and other foreign materials.

3.4.3 Do not make holes in framing members for supporting equipment, unless shown on the Drawings, without specific approval from the Government's Representative.

3.4.4 Drift pins may be used in connections to bring together the several parts, but not in a manner which will enlarge bolt holes or distort or damage the framing.

3.4.5 Connections using high-strength bolt fasteners shall meet the requirements of AISC "Specification for Structural Joints Using ASTM A 325 or A 490 Bolts", except any ASTM A 490 bolt or nut turned by the job inspecting torque shall require replacement of both bolt and nut. ASTM A 490 bolts shall not be substituted for ASTM A 325 bolts.

3.4.6 Use high-strength bolts for connections in structural framing. Tighten nuts by use of torque wrenches or by the "turn-of-the-nut" method in accordance with the AISC Specifications.

3.4.7 Install expansion anchors in accordance with the manufacturer's written instructions.

3.5 GROUTING BASE PLATES

3.5.1 Grout-in column base plates, where shown on the Drawings, with nonshrink grout mixed in accordance with the manufacturer's written instructions.

3.5.1.1 Before grouting, clean concrete (and masonry) bearing surfaces and roughen to improve bond. Clean the bottom surfaces of the base plates.

3.5.1.2 Pack grout solidly between bearing surfaces and base plates to ensure that no voids remain. Bevel the exposed surfaces.

3.6 TOUCH-UP

3.6.1 After erected steel has been approved, clean and paint all connections with primer. Touch-up the shop prime coat wherever it has been damaged. Prime and touch-up with the same primer as used for shop coat.

END OF SECTION

SECTION 05300

METAL DECKING

PART 1 - GENERAL

1.1 SUBMITTALS: Refer to Section 01300 for submittal procedures.

1.1.1 Installation Drawings: Submit erection drawings including a specification of the materials, quantities of materials, layout, and erection details.

1.1.2 Metal Deck Certificate of Compliance, ~~Submit a standard SDI Certificate of Compliance,~~ signed by the metal deck supplier, stating that the metal decking furnished ~~meets the requirements of the Drawings and this Specification.~~ conforms to the standards of the SDI. DFC #!

1.2 QUALIFICATION OF WELDING PERSONNEL AND PROCEDURES

1.2.1 Personnel and procedures for welding sheet steel in structures shall have been qualified in accordance with AWS D1.3 before welding any material or components which will become a part of the work covered by this Specification. Qualifications in accordance with ASME Section IX may be substituted for this requirement.

1.2.2 Maintain a file of welding procedure specifications, procedure qualification records, and welder performance qualification test results at the job site for review at any time by the Government's Representative.

1.3 SHIPPING, STORAGE, AND HANDLING

1.3.1 Deliver materials to the site in a dry, undamaged condition. Store off the ground under weathertight cover.

PART 2 - PRODUCTS

2.1 METAL DECKING UNITS

2.1.1 Standard Wide Rib Deck, meeting the requirements of SDI Publication No. 24 and manufactured from zinc-coated steel sheets. Decking shall be as manufactured by Inryco Inc.

2.1.1.1 Roof: Inryco, Type B Deck, 1-1/2 inches deep, 20 gauge.

2.1.2 Furnish decking in lengths which shall cover a minimum of two spans of support framing wherever possible, allowing for a minimum of 2 inches of bearing on end supports.

2.1.3 Ship decking to the job site in standard widths and cut to proper lengths. Prefabricate all penetration openings which are larger than 16 square feet.

2.2 METAL DECK ACCESSORIES

2.2.1 Furnish accessories such as spacer plates, bridging, and other sheet metal items that are to be attached directly to the deck to provide a finished surface for the application of roof insulation.

2.2.2 Furnish welding washers 16 gauge or heavier, or other approved method, for plug-welding.

2.2.4 Sheet metal or neoprene closers shall be the standard product of the decking manufacturer.

2.3 ZINC-RICH COMPOUND

2.3.1 Galvicon as manufactured by the Galvicon Corp, or ZRC as manufactured by the Sealube Co.

PART 3 - EXECUTION

3.1 INSTALLATION

3.1.1 Erection of Decking

3.1.1.1 Place decking in accordance with the approved Erection Drawings and the SDI Specifications. Handle decking units in a manner to avoid damage to the units. Limit temporary loads on roof decking to avoid overloading.

3.1.1.2 Place units on supporting steel framework, and adjust to final position before being permanently fastened. Bring each unit to proper bearing on supporting members.

3.1.1.3 Cut penetrating openings which are smaller than 16 square feet, and reinforce as shown on the Drawings.

3.1.2 Span and Lap of Panels

3.1.2.1 Lay decking panels across the support framing and span a minimum of two support members for each length of deck panel wherever possible. Lap ends of panels only over support framing.

3.1.2.2 Provide additional metal reinforcement and closure pieces as required for strength, continuity of decking and support of other work.

3.1.3 Welding of Decking

3.1.3.1 Plug weld decking to steel framing in accordance with approved Erection Drawings and AWS D1.3. Use welding washers or other approved methods for welding to steel framing.

3.1.3.2 Fasten units to steel framework at ends of units and at intermediate supports by welds at least 3/4 inch in diameter, spaced not more than

12 inches across width of the deck unit. Where two units abut, each unit shall be fastened to the steel framing. Welds shall be free of sharp points or edges.

3.1.3.3 Fasten side laps of adjacent units between supports at intervals not exceeding 3 feet between supporting members.

3.1.3.4 Visual weld examination and acceptance criteria shall meet the requirements of AWS D1.3. SC-12

3.1.4 Accessories

3.1.4.1 Cant Strips: Weld cant strips to top surface of roof decking at 12 inches on centers. Lap end joints at least 3 inches.

3.1.4.2 Closure Strips: Install metal closure strips at all open uncovered ends and edges of decks, and in voids between decking and other construction where shown on the Drawings. Weld into position to provide complete decking installation.

3.2 CLEANING AND TOUCH-UP

3.2.1 Thoroughly clean decking to be left unpainted and exposed to view by wire brushing or other effective means. Remove weld flux, spatter, slag, rust, oil, and other deleterious matter to provide clean, bright metal surfaces.

3.2.2 Touch-up zinc coated units with zinc-rich compound as specified. Apply in accordance with compound manufacturer's printed instructions.

3.2.3 Touch-up shop painted surfaces with the same paint used in shop, and apply in accordance with the manufacturer's written instructions.

END OF SECTION

SECTION 05500

METAL FABRICATIONS

PART 1 - GENERAL

1.1 SUBMITTALS: Refer to Section 01300 for submittal procedures.

1.2 - QUALIFICATION OF WELDING PERSONNEL AND PROCEDURES

1.2.1 See Section 05120 for welding of structural steel.

PART 2 - PRODUCTS

2.1 MATERIALS

2.1.1 Rolled Steel Shapes and Steel Plate: ASTM A 36.

2.1.2 Steel Bars and Rods: ASTM A 108, minimum yield 36,000 psi, carbon content not to exceed 0.35%.

2.1.3 Fasteners

2.1.3.1 Expansion Anchors: Hilti Kwik-Bolt or HDI drop-in anchors.

2.1.3.2 Weld Studs: Nelson Stud Welding Company, Type H4L.

2.1.4 Steel Grating: Meeting the requirements of FS RR-G-661, Type I, ~~pressure locked~~ (riveted grating not acceptable), with end banding bars, and hot-dip galvanized. Steel grating to be Irving welded rectangular design, Type GW-2 as manufactured by IKG Industries. Main bearing bars to be spaced 1-3/16 inches center to center. Crossbars to be resistance welded at right angles to the bearing bars and spaced 2 inches center to center. No notching or cutting of bearing or crossbars before welding is permissible. Maximum panel length at low end of trenches is to be 5 feet. ADD-1

2.1.5 Paint: See Section 09900.

2.1.6 Supports: Unistrut P-1000.

2.1.7 Support Clamps: Unistrut P-1111 and P-1112.

2.2 MISCELLANEOUS METAL FABRICATIONS

2.2.1 Ladders: Fabricate in accordance with the Drawings. Rungs shall be solid-section rods, fitted into punched or drilled holes in rails, and welded. All splices and connections shall have a smooth transition with original members without projections that are sharp or more extensive than required for joint strength. Rails shall be fitted with brackets at the spacing shown for anchorage to structure.

SECTION 07411

PREFORMED METAL SIDING

PART 1 - GENERAL

1.1 SUBMITTALS: Refer to Section 01300 for submittal procedures.

1.1.1 Fabrication Drawings: Submit fabricator erection drawings. Include a description of the sheet materials, fastening devices, and sealants to be supplied, the quantity of each type of material, and the layout of each area to be covered with the wall system.

1.1.2 Performance Test Confirmation: Performance test information shall be submitted confirming the ability of the controlled wall system to function within a ± 10% variation under release-out conditions.

PART 2 - PRODUCTS

2.1 Controlled release wall system and standard wall system as designed and manufactured by ~~H. H. Robertson Co.~~ North Star Industries. DT 18.

2.1.1 Prefinished steel siding panels shall be 22 gauge "box rib" exterior siding.

2.1.2 Prefinished steel liner panels shall be 20 gauge, "L2" interior liners, with 1-1/2 inches of fiberglass insulation.

2.1.3 Finish shall be standard off-white color Versacor coating system.

2.1.4 The wall insulation system, consisting of insulated steel liner panels and fiberglass blankets, shall have an insulating value of R-13. Insulation containing asbestos will not be acceptable.

2.1.5 Sub-girts to be the standard product of the manufacturer, shall be cold formed sections designed to receive attachment of face and liner panel fasteners.

2.1.6 Closures and Sealants

2.1.6.1 Closures shall be of contoured material designed to meet the configuration of the siding panels.

2.1.6.2 Metal closure strips, top, base, head, sill and jamb or corner trims shall be the same material, gauge, and finish as the siding.

2.1.6.3 Sealant shall be the manufacturer's standard and shall be provided in accordance with the manufacturer's written recommendations and as shown on the Drawings.

2.1.7 Fasteners DT #18

2.1.7.1 Fasteners shall be ~~400 Series, stainless steel, self tapping screws, painted to match siding and shall be manufacturer's standard product~~. Fabco Top Seal Fasteners and Weath-R-Seal Washers.

2.1.7.2 Explosion release fasteners shall be designed to fail at 30 lbs/ft$^2$ and be tested and approved by FM.

2.1.7.3 Concealed fasteners shall be the manufacturer's standard product, designed to interlock with the siding for attachment without panel perforation.

PART 3 - EXECUTION

3.1 METAL SIDING AND LINER PANELS

3.1.1 Store all materials at the project site in a dry place away from excess moisture, uncured concrete, cement, lime, or any strong chemicals.

3.1.2 Plastic protection film shall be applied to prefinished surfaces and must be removed before the panels are installed or immediately after installation.

3.1.3 Field assemble and install panel systems in accordance with Erection Drawings and in accordance with the manufacturer's written instructions.

3.1.4 Protect exposed surfaces of prefinished panels used on the project during their installation. Shop or field applied painting will not be acceptable except for minor touch-up.

3.1.5 See Drawing for location of controlled release wall system and the standard wall system.

END OF SECTION

SECTION 07510

BUILT-UP BITUMINOUS ROOFING
ON CONCRETE & METAL DECK

PART 1 - GENERAL

1.1 SUBMITTALS: Refer to Section 01300 for submittal procedures.

PART 2 - PRODUCTS

2.1 MANUFACTURER

2.1.1 Products specified herein are manufactured by ~~Manville Building Materials Corporation~~ Gilsonite Inc. unless noted otherwise. DT #103

2.2 ROOF INSULATION

2.2.1 Insulation shall be Fes-core, with a thermal resistance rating of R-20, and listed as acceptable for Class 1 construction by FM for application on a steel deck, in accordance with FM Loss Prevention Data Sheet 1-28.

2.3 VAPOR RETARDER

2.3.1 Vapor barrier shall be GlasPly and listed by FM as acceptable for Class 1 construction.

2.3.2 The vapor barrier adhesive shall be a fire-retardant material approved by FM as acceptable in Class 1 construction. The vapor retarder and the adhesive used shall be products of the same manufacturer, or the adhesive shall be a product recommended by the vapor retarder manufacturer's written instructions.

2.4 ROOFING SYSTEMS

2.4.1 Four-ply, smooth-surface, GlasPly felt, Specification No. 4GIS, Type III asphalt, with a final finish coating of fibrated aluminum roof coating over Topgard Type-B fibrated.

2.5 LUMBER FOR NAILING STRIPS AND CURBS

2.5.1 Lumber for nailing strips and curbs shall be of treated wood using the pressure process with a water-borne salt. Oil based preservatives are not allowed.

2.5.2 Nailing strips shall be the same thickness as the insulation used and shall be lapped a minimum of 2 feet at joints.

2.6 WALKWAY SYSTEM

2.6.1 Walkway material shall be a mineral-granule-surfaced asphalt cap sheet, 90 lb weight. Color shall be white or off-white.

2.7 METAL FLASHING AND GRAVEL STOPS

2.7.1 For metal flashing and gravel stops, see the Drawings and Section 07600 for product and execution.

2.8 CANT STRIPS AND CRICKETS

2.8.1 Cant strips and crickets shall be the standard product of the roof insulation manufacturer.

PART 3 - EXECUTION

3.1 STORAGE, HANDLING, AND PREPARATION OF MATERIALS

3.1.1 Keep all materials clean, dry, and protected from weather during storage and application. Insulation which has become damp or wet shall not be used.

3.1.2 Store rolls of felt in upright position and protect from damage during storage and application.

3.1.3 Deliver all roofing and insulating materials to the job site in their original sealed packages or containers with the manufacturer's label intact, showing name and grade of material. Roofing materials for application of insulation shall be of the same manufacturer as used for the roofing application.

3.1.4 Use extreme care to control the temperature of the asphalt during heating. Any evidence that a batch has been overheated shall be cause for rejection of that batch.

3.1.5 Asphalt shall not be heated above 500 F for Type III asphalt. Temperature of asphalt when applied shall be at least 350 F.

3.1.6 Asphalt shall not be adulterated in any way.

3.1.7 Leaky containers shall not be used for handling vapor barrier adhesive, asphalt, or roofing cement. If such materials are spilled or spattered on permanently exposed surfaces of structures, completely remove the material from the surface of the structure.

3.1.8 Equip material handling dollies and other wheeled equipment with low-pressure pneumatic tires when used on roof.

3.1.9 Materials and equipment shall not be used on, stored on, or transported over the new roofs unless protection is provided to prevent damaging or overloading the roof deck, built-up roofing components, or the structural system. The Contractor shall verify roof loading conditions with the Government's Representative.

3.2 SURFACE PREPARATION

3.2.1 All surfaces to receive vapor retarder, insulation, and roofing materials shall be completely dry and free from dirt, dust, loose materials, and frost, or effects of freezing. Sweep surfaces clean before applying materials. Materials shall not be applied when the ambient temperature or the temperature of the roof deck is 40 F or lower, or where there is frost or dampness visible on the deck.

3.2.2 Roofing materials shall not be applied to the deck until the deck surface preparation is complete. The Government's Representative will verify the condition of the roof deck prior to application of roofing materials.

3.2.3 Install cant strips, at least 3 inches high, at the intersection of all vertical surfaces with the roof deck. Install crickets where shown on the Drawings. Crickets shall be constructed with the peak a minimum of 4 inches high.

3.3 APPLICATION OF VAPOR RETARDER

3.3.1 Apply vapor retarder in accordance with the roof insulation specifications and written instructions.

3.3.2 A cut-back asphalt concrete primer shall be applied to the concrete roof surface prior to application of the vapor retarder.

3.3.3 Apply only that amount of vapor retarder which can be covered with insulation and roofing on the same day.

3.3.4 Patch all holes and damaged areas in vapor retarder with a layer of vapor retarder material set in a continuous coating of adhesive. Extend patch a minimum of 2 inches beyond edges of damaged area.

3.4 APPLICATION OF ROOF INSULATION

3.4.1 The roof insulation shall be installed in accordance with Manville Specification No. 501, for concrete deck roof areas and Manville Specification No. 503 for steel deck roof areas. Edges of insulation shall bear on or across flutes in steel decking. Edges parallel to flutes shall not extend over the voids in decking. Tape insulation joints with Owen-Corning "Fiberglas" roof tape welded to the insulation joints with hot steep asphalt.

3.4.2 All insulation applied to the deck shall be completely covered and sealed with built-up roofing on the same day the insulation is applied. Where additional insulation is to be laid on succeeding shifts, seal the exposed edges of the insulation to the vapor retarder with 12 inch wide strips of vapor retarder material and cement to prevent the entry of water into or under the insulation. Remove vapor retarder at edge of insulation prior to starting new work.

3.4.3 Insulation shall be adhered to the vapor barrier over 100% of the area, and all end flaps, protective felt strips, and strips for sealing edges of insulation between shifts shall be adhered over 100% of their area.

3.5 APPLICATION OF BUILT-UP ROOFING

3.5.1 Application of the built-up roofing system shall be as shown on the Drawings, this Specification, Manville Specification No. 4GIS and Manville Application Procedures.

3.5.2 Prior to application of roofing plies, a sealing envelope at the edge of the built-up roofing shall be provided as follows: Lay two roofing plies, a minimum of 12 inches wide, in a coating of roofing cement 4 inches wide and nailed through tin discs on 12 inch centers to the wood nailer along edges of roof decks and roof penetrations before laying built-up plies. This will provide a 6-inch flap for sealing ends and edges of plies after roofing has been applied. After all roofing plies are in place, turn the flaps back over and mop to the top of the roofing membrane.

3.6 FLASHING SYSTEMS

3.6.1 Application of roof flashing systems shall be as shown on the Drawings and by Manville Specification number listed below:

Gravel stops: FE-4 Modified, Dynakap to be used in lieu of GlasPly
Concrete parapet and concrete masonry unit walls: FE-1 (LB) Modified, Dynakap to be used in lieu of GlasPly
Equipment curbs and relief vent curbs: FE-8 Modified, Dynakap to be used in lieu of GlasPly

3.7 INSTALLATION OF WALKWAY SYSTEM

3.7.1 Install walkway system where shown on the Drawings. Set each cap sheet in a solid mopping of asphalt. Top surface shall not receive asphalt.

3.8 INSTALLATION OF METAL FLASHING AND GRAVEL STOPS

3.8.1 Install metal roof flashing and gravel stops as shown on the Drawings after all built-up roofing plies are in place. See Section 07600 for execution.

3.8.2 Lap joints in counterflashing over base flashing and in gravel stops and edging 4 inches. Seal laps in gravel stops and roof edging over the entire roof flange and bead area with roofing cement. Carefully and completely remove all excess roofing cement from permanently exposed metal surfaces.

3.9 CERTIFICATION

3.9.1 Provide a typewritten information card, under glass, in a weathertight frame, for each roof. This card shall contain the information listed on the Roofing and Sheet Metal Work Form (sample appended). Install the card near the point of access to the roof, as directed. Deliver a duplicate card to the Government's Representative.

## ROOFING AND SHEET METAL WORK

1. Contract Number

2. Date Work Completed

3. Type of Deck

4. Slope of Deck

5. Insulation
   a. Type
   b. Thickness
   c. Manufacturer's Name

6. Felt Application
   a. Type
   b. Weight
   c. Method (hand or machine nailing)
   d. Manufacturer's Name

7. Bitumen
   a. Type
   b. Quantity per square
   c. Manufacturer's Name

8. Flashing
   a. Type
   b. Weight or Gauge
   c. Manufacturer's Name

9. Statement of Compliance or Exceptions

Contractor's Signature Date Signed

Inspector's Signature Date Signed

SAMPLE COPY

(The contractor shall provide a similar card, typewritten and framed under glass with a weathertight frame. Install near the point of roof access as directed.)

END OF SECTION

SECTION 07600

FLASHING AND SHEET METAL

PART 1 - GENERAL

1.1 SUBMITTALS: Refer to Section 01300 for submittal procedures.

1.2 DELIVERY AND STORAGE: Store all sheet metal off the ground and protected from damage.

PART 2 - PRODUCTS

2.1 SHEET METAL: Galvanized sheet steel, coating Class G90, meeting the requirements of ASTM A 527.

2.2 SOLDER: 50% tin, 50% lead meeting the requirements of ASTM B 32.

2.3 REGLET FLASHING: Fry Reglet Corporation galvanized steel, Type MA.

2.4 MATERIAL GAUGES

2.4.1 Gravels stops: 24 gauge.

2.4.2 Copings: 24 gauge.

2.4.3 Gutters: 24 gauge.

2.4.4 Downspouts: 26 gauge.

2.4.5 Counterflashing/cleats: 26 gauge.

2.4.6 Reglet: 24 gauge.

2.4.7 Downspout/gutter hangers: 10 gauge.

PART 3 - EXECUTION

3.1 FABRICATION

3.1.1 General

3.1.1.1 Form sheet metal accurately to the profiles shown on the Drawings, free from buckles and waves.

3.1.1.2 Hem all exposed edges 1/2 inch.

3.1.1.3 Make provision in all fabrication for expansion and contraction.

3.1.1.4 Clean and flux metals before soldering. Sweat solder completely through seam width.

3.1.1.5 Neutralize excess flux, as work progresses, with 5% to 10% washing soda solution, and rinse thoroughly.

3.1.2 Gravel Stops

3.1.2.1 Fabricate with lap joints spaced 10 feet apart, maximum.

3.1.2.2 Pre-form and solder corners.

3.1.2.3 Provide continuous cleat to lock-in gravel stop. Provide 6 inch wide cleat, 2 feet on center, at gutter.

3.1.3 Copings

3.1.3.1 Fabricate with lap joints spaced 8 feet apart, maximum.

3.1.3.2 Pre-form corners with mitered and soldered joints.

3.1.3.3 Fabricate coping to lock over continuous cleats on the outside edge and 8 inch long cleats at the joints on the inside edge.

3.1.4 Gutters and Downspouts

3.1.4.1 Solder one inch high end caps at gutter ends.

3.1.4.2 Provide expansion joints in gutters, midway between downspouts, and provide end caps spaced 1/2 inch apart. Close the top of expansion joints with loose-lock covers. Extend the cover over the outer face of the gutter and under the gravel stop.

3.1.4.3 Provide a 2 inch long thimble at each downspout location. Make the thimble 1/8 inch smaller than the downspout and solder the flange of the thimble to the gutter.

3.1.4.4 Solder lap joints 1 inch minimum.

3.1.4.5 Provide concealed removable basket type strainers at each downspout.

3.1.4.6 Downspout upper sections shall telescope into lower sections a minimum of 2 inches.

3.2 INSTALLATION

3.2.1 Verify that surfaces to receive sheet metal are clean and smooth and that blocking has been installed.

3.2.2 Install sheet metal watertight, without waves, warps, buckles, fastening stresses, or distortion.

3.2.3 Set the lap joints of copings in cold application cement and install over cleats.

3.2.4 Set the flanges of gravel stops in cold application cement. Lap 4 inches at the joints and apply cement in the joints. Nail the flange at 3 inches on center into wood nailers. Stagger the nails.

3.2.5 Seal expansion joint covers of gutters with cold application cement.

3.2.6 Attach downspouts with hangers at tops and bottoms, at joints, and spaced at 8 feet maximum.

3.2.7 Brace gutter with metal hangers at 4 feet maximum.

3.2.8 Nails for attaching metal flashing shall be 1-1/2 inches long, 10 gauge, hot dipped galvanized, with minimum 3/8 inch head.

END OF SECTION

SECTION 07700

EXPLOSION RELIEF VENT

PART 1 - GENERAL

1.1 SUBMITTALS: Refer to Section 01300 for submittal procedures.

1.1.1 Fabrication Drawings: Submit Fabrication and Erection Drawings of the explosion relief vents.

1.2 DELIVERY, STORAGE, AND PROTECTION: Deliver materials in their original sealed packages. Store and handle materials in a manner which will protect them from damage. Store above ground and protect against moisture and physical damage.

PART 2 - PRODUCT

2.1 EXPLOSION RELIEF ROOF VENT

2.1.1 Vent shall comply with current National Fire Test Standards for automatic shrink out vents and release automatically at an outward pressure of 30 $lbs/ft^2$. Model XRV-P, Catalog No. 40, as manufactured by APC Corporation.

PART 3 - EXECUTION

3.1 INSTALLATION

3.1.1 Assemble and install explosion relief roof vent in strict accordance with the manufacturer's written instructions and recommendations.

3.2 PROTECTION

3.2.1 Protect all finish until completion of this project.

3.2.2 Replace or repair any damaged or defaced items.

END OF SECTION

SECTION 07920

SEALANTS AND CAULKINGS

PART 1 - GENERAL

1.1 SUBMITTALS: Refer to Section 01300 for submittal procedures.

1.2 DELIVERY AND STORAGE OF MATERIALS

1.2.1 Deliver materials to the job site in manufacturer's original containers, unopened and labels intact. Handle and store all materials to prevent inclusion of foreign materials or exposure to temperatures exceeding 90 F.

PART 2 - PRODUCTS

2.1 GENERAL: Container labels shall show name of material, date of manufacture, mixing instructions, shelf life, and curing time. Color to closely match adjacent surfaces.

2.2 BUILDING SEALANT: One-part, low modulus, silicone sealant, Gesil N 2600, General Electric Company.

2.3 FIRE BARRIER SEALANT: 3M brand fire barrier caulk CP 25.

2.4 PRIMER: Nonstaining type, in accordance with the sealant or caulking compound manufacturer's written instructions.

2.5 BACKER ROD: Closed-cell polyethylene foam rod; Haskon Inc. "Minicel", approximately 25% larger than the width of the joint in which it is to be installed.

2.6 EXPANSION JOINT FILLER: WR Grace Co. Standard Cork Code 4323.

2.7 BOND BREAKER: Polyethylene tape with pressure-sensitive adhesive.

PART 3 - EXECUTION

3.1 PREPARATION OF JOINTS

3.1.1 Follow the written instructions of the manufacturer of the sealant or caulking materials for each condition of application. Unless the written instructions of the manufacturer state otherwise, make depth of sealant joints 1/2 of the joint width.

3.2 BACK-UP

3.2.1 Install backer rod in all joints where sealant is to be applied. Install with the proper tool, in accordance with the manufacturer's written instructions and to the correct depth for the sealant shape specified.

Where the depth of joint is not sufficient for installation of backer rod, use bond-breaker tape to prevent three-point adhesion.

3.3 INSTALLATION OF SEALANT

3.3.1 Perform all sealant work using experienced workers, specified materials, and proper tools in accordance with the manufacturer's written instructions for the conditions of each application. Tool the sealant after installation as required to properly fill the joint and produce a smooth surface. Take all necessary precautions to prevent contact of sealants with adjacent surfaces.

END OF SECTION

SECTION 08100

METAL DOORS AND FRAMES

PART 1 - GENERAL

1.1 SUBMITTALS: Refer to Section 01300 for submittal procedures.

1.1.1 Fabrication Drawings: Submit drawings indicating the size, elevations, and location of each door and frame. Include location and details of hardware reinforcement and frame anchors.

1.2 DELIVERY AND STORAGE

1.2.1 Deliver to the site in undamaged condition and store above ground and under cover. Storage of doors and frames shall be in accordance with SDI-100.

PART 2 - PRODUCTS

2.1 HOLLOW METAL DOORS: Hollow metal doors and frames shall be fabricated in accordance with SDI-100 and this Specification.

2.1.1 Grade II, Model 2, full flush, hollow steel construction. Doors scheduled for fire rating shall bear appropriate UL or FM rating label.

2.1.2 Top shall have flush end closure and bottom shall have recessed channel end closure.

2.1.3 See details and Door Schedule on Drawings for types and sizes.

2.1.4 Internal construction shall be polystyrene foam board core meeting the requirements of SDI-100-2.3.3.3.

2.1.5 Frames installed for glazed openings (vision lite) where scheduled. Glazing system shall be minimum 20 gauge steel.

2.2 HOLLOW METAL FRAMES (DOORS AND WINDOWS)

2.2.1 See details and Door Schedule on Drawings for profile and dimensions. Frames scheduled for fire rating shall bear appropriate UL or FM rating label.

2.2.2 Frames shall be welded construction.

2.2.3 Provide two weld studs, 3/8 inch diameter, at each side of framing.

2.2.4 Provide four wall anchors per side in openings in precast concrete walls.

2.2.5 Plaster guards installed at hardware cut-outs.

2.3 SHOP FINISH

2.3.1 Primer containing lead will not be acceptable and shall not be yellow color.

PART 3 - EXECUTION

3.1 INSTALLATION

3.1.1 Frames shall be installed in accordance with SDI-100 and this Specification.

3.1.2 Leave temporary spreaders in place until the frames are securely attached to wall framing.

3.1.3 Align anchors with hinges and the strike at door frames.

3.1.4 Install doors in conjunction with application of hardware, and with uniform clearance at head and jambs. Leave in smooth operating condition.

3.1.5 Installation of window frames will be executed by the precast concrete wall panel manufacturer. Glass panes shall be installed after wall panels have been erected.

END OF SECTION

SECTION 08315

BLAST-RESISTANT DOORS

PART 1 - GENERAL

1.1 SUBMITTALS: Refer to Section 01300 for submittal procedures.

1.1.1 Fabrication Drawings: Submit Drawings showing all features of construction and installation details.

1.1.2 Calculations: Submit certification that door assembly is in compliance with design requirements.

1.2 STORAGE: Store door and frame units off ground and under cover.

PART 2 - PRODUCTS

2.1 LOW RANGE BLAST DOOR

2.1.1 Low range blast door and frame shall be as manufactured by ~~Overly Manufacturing Company.~~ Krieger Steel Products Co. DT #22

2.1.2 Door and frame shall bear UL label.

2.1.3 Door assembly, including door, frame, hardware, and seals, shall be designed to withstand a pressure of 200 pounds per square foot. Rebound pressure shall be 100% of design pressure.

2.1.4 The door shall be sized to accommodate a concrete masonry opening of 6 feet 8 inches wide by 7 feet 4 inches high.

2.1.5 The door shall be equipped with the following hardware:

Closer - Norton 7700
Lockset - Corbin 863 x 455
Keyway - per Hardware Schedule (Section 08710)

PART 3 - EXECUTION

3.1 Install door and frame in accordance with the Drawings, approved submittals, and manufacturer's written instructions.

3.2 Install plumb and square. Adjust doors as required and leave in smooth operating condition.

END OF SECTION

SECTION 08332

OVERHEAD COILING DOORS

PART 1 - GENERAL

1.1 SUBMITTALS: Refer to Section 01300 for submittal procedures.

1.1.1 Fabrication Drawings: Submit Drawings showing each door type and location. Describe all features of construction and show installation details.

1.1.2 Certified Vendor Information (CVI): Submit the information specified in Column 6 of the vendor data list in this Section.

1.2 DELIVERY AND STORAGE: Deliver to the job site in undamaged condition. Store above ground and under cover.

PART 2 - PRODUCTS

2.1 OVERHEAD COILING DOORS: As manufactured by ~~Atlas~~ Overhead Door Corporation. See Drawings for Door Schedule for type and location. DT #24A

2.1.1 Exterior doors: Insulated thermal series-standard.

2.1.2 Interior doors: Rolling fire door and rolling service door. Fire door assemblies shall be UL listed or FM approved.

2.1.3 Doors manually operated by means of a chain hoist using gear reduction and galvanized hand chain.

2.1.4 Hood and slat construction to be galvanized steel.

2.1.5 Guides to be structural steel angles. Provide windlock bar at exterior doors.

2.1.6 Galvanized slats and hood to be shop primed with baked-on finish. Other surfaces, except bearings, to be shop primed.

2.1.7 Equip doors with locking devices, suitable for padlocking.

PART 3 - EXECUTION

3.1 INSTALLATION

3.1.1 Install all doors in accordance with the Drawings and the approved submittals. Fire rated assemblies shall be installed in accordance with NFPA 80.

3.1.2 At completion, adjust as required for the door to operate freely.

Project No. B-526

Title: Non-Radioactive Hazardous Chemical Waste Facility

**KAISER ENGINEERS**
**HANFORD**

## VENDOR DATA LIST

("X" Indicates Required Data)

| 1 EPN Identification | 2 Description | 3 Reference Drawing | 4 Specification Paragraph | 5 Approval/Data: Dimensional Drawings | Equipment Weights | Specifications | Material Description | Performance Data | Circuit or Control Diagrams | Data Sheets | Illustrative Cuts | Installation Instructions | 6 Certified Vendor Information (CVI): Dimensional Drawings | Equipment Weights | Specifications | Certified Test Data | Circuit or Control Diagram | Instructions: Installation | Operation | Maintenance | Spare Parts List | 7 Remarks |
|---|---|---|---|---|---|---|---|---|---|---|---|---|---|---|---|---|---|---|---|---|---|---|
| 1 | Low Range Blast Door | | 2.1 | | | | | | | | | | | | | | | | | X | | |

END OF SECTION

DOE Richlan

K (3-82)

$!&#K/0245K

08332 - 2

B-526-C1

SECTION 08710

FINISH HARDWARE

PART 1 - GENERAL

1.1 SUBMITTALS: Refer to Section 01300 for submittal procedures.

1.1.1 Hardware List: Submit complete hardware list. List the hardware for each door separately under the door number and hardware requirement.

PART 2 - PRODUCTS

2.1 SPECIFIC REQUIREMENTS: See the Hardware Schedule at the end of this Section for specific requirements.

2.2 Refer to Section 08315 for hardware supplied and installed by the blast resistant door manufacturer.

PART 3 - EXECUTION

3.1 PACKING AND MARKING: Pack each item of hardware separately, with all necessary fasteners and instructions. Mark each item with the hardware number shown on the Hardware Schedule.

3.2 FASTENERS: Install all necessary screws, bolts, or other fasteners of suitable size and type to anchor the hardware in its intended position. Match hardware finish. Supply with expansion shields, toggle bolts, or other appropriate anchors.

3.3 PROTECTION: Protect hardware from damage at all times during construction, both prior to and after installation.

3.4 INSTALLATION AND FIT: Verify the installation and be responsible for the fit of hardware in the location specified. Install each hardware item in accordance with the manufacturer's written instructions.

3.5 KEYWAY: Furnish 6 pin-tumbler cylinders compatible with 67 Keyway system.

3.6 COMPLETION: Remove protective coverings and clean all hardware before completion of this project. Leave all hardware in smooth operating condition. Deliver all keys to the Government's Representative.

## HARDWARE SCHEDULE

| GROUP NO. | ITEM | QUANTITY | TYPE | FINISH/MFR |
|---|---|---|---|---|
| 1 | Hinges | 3 Pairs | 4-1/2 x 4-1/2 Butts FBB179 | US26D/STANLEY |
| | Lockset | 1 | #836 x 1410 | US26D/CORBIN |
| | Closer | 2 | #7700HFL-3 | AL/NORTON |
| | Flush Bolts | 1 Pair | #458 | B26D/IVES |
| | Coordinator | 1 | #469 x 478 | B26D/IVES |
| | Astragal | 1-(7'-0") | #357A | PEMKO |
| | Kick Plate | 1 Pair | #48-8" x 36" | GRAY/QUALITY |
| NOTE: Lockset and Astragal shall be installed on the active leaf. | | | | |
| 2 | Hinges | 1-1/2 Pairs | 4-1/2 x 4-1/2 Butts FBB179 | US26D/STANLEY |
| | Lockset | 1 | #836 x 1410 | US26D/CORBIN |
| | Closer | 1 | #7700-3 | AL/NORTON |
| 3 | Hinges | 1-1/2 Pairs | 4-1/2 x 4-1/2 Butts FBB179 | US26D/STANLEY |
| | Lockset | 1 | #836 x 1410 | US26D/CORBIN |
| | Closer | 1 | #7700HFL-3 | AL/NORTON |
| 4 | Hinges | 1-1/2 Pairs | 4-1/2 x 4-1/2 Butts FBB179 | US26D/STANLEY |
| | Closer | 1 | #7500-3 | AL/NORTON |
| | Push Plate | 1 | #40-6 x 16 | AL/QUALITY |
| | Pull Plate | 1 | #1546A | AL/QUALITY |
| | Kick Plate | 1 | #48-8" x 34" | QUALITY |
| | Door Stop | 1 | #306TB | SS/QUALITY |

| GROUP NO. | ITEM | QUANTITY | TYPE | FINISH/MFR |
|---|---|---|---|---|
| 5 | Hinges | 1-1/2 Pairs | 4-1/2 x 4-1/2 Butts FBB179 | US26D/STANLEY |
| | Exit Device | 1 | #29 x 2K | SBL/CORBIN |
| | Closer | 1 | #7500-5 | AL/NORTON |
| | Threshold | 1 | #272A | PEMKO |
| | Weatherstripping | 1 Set | #297AV | PEMKO |
| | Door Bottom | 1 | #345AV | PEMKO |
| | Door Stop | 1 | #138 | AL/QUALITY |
| 6 | Hinges | 1-1/2 Pairs | 4-1/2 x 4-1/2 Butts FBB179 | US26D/STANLEY |
| | Exit Device | 1 | #29 x Exit Only | SBL/CORBIN |
| | Closer | 1 | #7500-3 | AL/NORTON |
| | Threshold | 1 | #157A | PEMKO |
| | Weatherstripping | 1 Set | #297AV | PEMKO |
| | Door Bottom | 1 | #345AV | PEMKO |
| | Door Stop | 1 | #138 | AL/QUALITY |
| 7 | Hinges | 1-1/2 Pairs | 4-1/2 x 4-1/2 Butts FBB179 | US26D/STANLEY |
| | Exit Device | 1 | #LA 29 x 2K | SBL/CORBIN |
| | Closer | 1 | #7700-3 | AL/NORTON |
| | Door Stop | 1 | #W302-S | SS/QUALITY |

END OF SECTION

SECTION 08800

GLASS AND GLAZING

PART 1 - GENERAL

1.1 SUBMITTALS: Refer to Section 01300 for submittal procedures.

1.2 Deliver glass to the job with labels, designating manufacturer, type, thickness, and quality of glass.

PART 2 - PRODUCTS

2.1 GLASS

2.1.1 Wire Glass: Clear, 1/4" nominal thickness polished plate reinforced with standard Misco polished wire. Mississippi wire glass as manufactured by Hordis Brothers, Inc.

2.1.2 Insulating Glass: Bronze tint with inboard clear lite, minimum 1/4 inch air space.

PART 3 - EXECUTION

3.1 INSTALLATION

3.1.1 Install glass in conformance with the manufacturer's written instructions.

3.2 CLEANING: At the completion of the work, remove all excessive glazing compound from window assembly, remove all labels and paint from the glass, clean and polish.

END OF SECTION

3.4 APPLICATION OF GYPSUM BOARD (GENERAL)

3.4.1 Inspect all framing scheduled to receive gypsum board. Deficiencies shall be corrected prior to gypsum board application.

3.4.2 Apply gypsum board first to ceilings and then to walls. Use boards of maximum practical lengths in order to minimize joints. Bring boards into contact, but do not force into place. Fit boards neatly where ends or edges abut.

3.4.3 Install fasteners at least 3/8 inch from edges.

3.4.4 Apply corner bead to all external angles, in accordance with the manufacturer's written instructions. Casing bead shall be installed at all locations where gypsum board abuts a dissimilar material.

3.4.5 Ceiling Installation

3.4.5.1 Single Ply: Apply gypsum board with long dimension at right angles to the furring members.

3.4.6 Wall Installation

3.4.6.1 Single-Ply Application: Apply with long dimension of panels horizontally according to the manufacturer's written instructions. Make joints over framing or furring members. When installing board horizontally attach upper board first. Stagger end joints on different framing members. and on opposite sides of the wall.

3.4.6.2 Control Joints: Make control joints with casing bead installed back-to-back and attached to separate framing or furring members. Install at a maximum of 30 feet on center in continuous runs.

3.5 APPLICATION TO STEEL FURRING OR FRAMING

3.5.1 Fasten gypsum board to furring and framing with screws. Drive screws with clutch-controlled, power screwdrivers. Drive slightly below the surface.

3.5.2 Space screws at 12 inches on center into each bearing for ceilings and at 16 inches on center into each bearing for walls.

3.6 TAPING AND FINISHING

3.6.1 Apply compound over joints in a thin uniform layer, spread at least 3 inches wide, center reinforcing tape on the joint and embed in the compound. When dry, apply second coat of compound in a thin uniform coat, a minimum of 6 inches wide. Sand to eliminate ridges and high points.

3.6.2 Apply a third coat of compound after second coat is dry and has been sanded. Feather out to a minimum width of 12 inches. After compound has dried, sand as necessary to obtain a uniformly smooth surface.

3.6.3 Finish over fasteners to be similar to finishing over joint tape.

3.6.4 Treat internal corners in the manner specified for joints except fold reinforcing tape lengthwise through the middle and fit neatly into the corner.

3.6.5 Fit corner bead neatly over external corner and fasten with screws at approximately 6 inches on center and driven into framing members. Treat with joint compound and reinforcing in the manner specified for joints. Feather out joint compound from 8 to 10 inches on each side of the corner.

3.6.6 Apply medium "orange peel" texture to exposed finished surfaces, USG Texture II finish system.

END OF SECTION

SECTION 09500

ACOUSTICAL SYSTEM

PART 1 - GENERAL

1.1 SUBMITTALS: Refer to Section 01300 for submittal procedures.

1.2 DELIVERY, STORAGE, AND PROTECTION: Deliver materials in their original sealed packages. Store and handle materials in a manner which will protect them from damage. Store above ground and protect against moisture and physical damage.

PART 2 - PRODUCTS

2.1 ACOUSTICAL UNITS

2.1.1 Acoustical Lay-In Panels: Armstrong Cork Company "Minaboard", Cortega design, Class 25 or less flame spread.

2.1.1.1 NRC (Noise Reduction Coefficient) Range: .50 - .60 mechanically supported.

2.1.1.2 Finish: Factory applied washable white paint with light reflectance of over 75%.

2.1.1.3 Size: 24 x 48 x 5/8 inch and 12 x 48 x 5/8 inch.

2.2 SUSPENSION SYSTEM: Exposed two way tee grid system for lay-in acoustical panels. "DX System" as manufactured by Donn Corporation.

2.2.1 Exposed Finish: Low sheen white satin baked enamel.

2.2.2 Wall Moldings: Angle shape.

2.2.3 Hanger Wire: Galvanized steel wire, not less than 12 gauge.

PART 3 - EXECUTION

3.1 GENERAL

3.1.1 Do not start acoustical work until work on adjacent surfaces has been completed, the area in which the work is to be performed is clean and the building has been closed in and heated to at least 50 F.

3.1.2 Install acoustical units in straight, perfectly level, and true lines.

3.2 LAY-IN PANELS ON T-BAR SUSPENSION SYSTEM

3.2.1 Support main runners with hanger wires spaced at not more than 48 inches on center.

3.2.2 Where above-ceiling equipment prevents installation of hanger wire from structure to ceiling, support ceiling on 1-1/2 inch cold-rolled runner channels hung from structure.

3.2.3 Install an intermediate hanger wire at all cross runners spanning more than 48 inches.

3.2.4 Install hanger wires supporting T-bars at each corner of each lighting fixture.

3.2.5 Fasten wall moldings to walls at not more than 32 inches on center.

3.2.6 Install in conformance with ASTM C 636.

END OF SECTION

SECTION 09650

RESILIENT FLOORING

PART 1 - GENERAL

1.1 SUBMITTALS: Refer to Section 01300 for submittal procedures.

1.2 DELIVERY, STORAGE, AND PROTECTION: Deliver materials in their original sealed packages. Store and handle materials in a manner which will protect them from damage. Store above ground and protect against moisture and physical damage.

PART 2 - PRODUCTS

2.1 TILE FLOORING: 12 x 12 x 1/8 inch vinyl composition tile, supreme vinyl Corlon, color No. 55507 beige. Manufacturer: Armstrong.

2.2 RUBBER BASE: 4 inches high, 1/8 inch thick cove base. Color No. 23 dark brown. Manufacturer: Flexco.

2.3 EDGE STRIPS: Homogeneous vinyl, 1 inch wide, with tapered edge. Color No. 200 Brown. Manufacturer: Flexco.

2.4 PRIMER: Cut-back type in accordance with the tile manufacturer's written instructions.

2.5 ADHESIVES: In accordance with the manufacturer's written instructions for the type of flooring or base being installed, and the condition and type of underlayment or subfloor receiving the floor covering.

PART 3 - EXECUTION

3.1 INSPECTION: Inspect all surfaces which are to receive resilient flooring. Report in writing to the Government's Representative all surface defects that need corrective work. Proceed with installation only after all corrective work has been performed and the surfaces are acceptable.

3.2 PREPARATORY WORK: Clean all subfloors before installation. Sweep the subfloor clean, scrape off all spatters, remove with solvent all materials which may affect the adhesion of resilient flooring. Patch all cracks, holes, joints, and score marks with a latex type underlayment in accordance with the tile manufacturer's written instructions. Vacuum the subfloor immediately before installation.

3.3 MOISTURE TESTS

3.3.1 Moisture test for concrete floors in contact with the ground. Spread patches of cut-back primer in several locations in each room and

allow to dry overnight. If the dry primer can be peeled easily from the floor surface, the floor is not sufficiently dry. Repeat test until the primer adheres properly.

3.4 INSTALLATION

3.4.1 General

3.4.1.1 Start installation only after the work of all other trades, including painting, has been completed.

3.4.1.2 Maintain a temperature of at least 70 F for 48 hours before installation, during installation, and 48 hours after installation. Maintain a temperature of at least 55 F thereafter.

3.4.1.3 Install in accordance with the written instructions of the manufacturer of the product being installed.

3.4.2 Tile Flooring

3.4.2.1 Lay tile in straight pattern starting at the center of room working toward walls. Do not install perimeter tile with less than one half tile width except where unavoidable. Butt all joints and make all lines of joints straight and parallel to the walls.

3.4.2.2 Install tiles flat and smooth. Replace tiles with bumps and uneven surfaces with new tiles.

3.4.2.3 Where tiles adjoin different floor surfaces, terminate with reducer strips firmly cemented in place.

3.4.3 Rubber Base

3.4.3.1 Install using the longest lengths practicable. Butt joints of rubber base tightly.

3.4.3.2 Install preformed corners at external corners; accurately cut, miter, and fit internal corners.

3.5 CLEAN-UP: Leave the floor broom-clean and remove all excess adhesive from surface of floor and other exposed surfaces. Remove all adhesive containers, tools, and other implements used in installation from the job site.

3.6 PROTECTION: Avoid rolling loads for 48 hours after installation. Cover tile exposed to traffic with heavy-duty kraft paper. Leave paper in place until final acceptance.

END OF SECTION

SECTION 09900

PAINTING

PART 1 - GENERAL

1.1 SUBMITTALS: Refer to Section 01300 for submittal procedures.

1.2 HANDLING AND STORAGE OF MATERIALS

1.2.1 Deliver all materials to the job site in the manufacturer's unopened containers with labels intact. Do not open containers or remove labels until after inspection and acceptance by the Government's Representative.

1.2.2 Store materials in accordance with the manufacturer's written instructions and in a well ventilated place not exposed to excessive heat, smoke, sparks, flame, or direct rays of the sun.

PART 2 - PRODUCTS

2.1 The terms used herein are as defined in Pittsburgh Paint (PPG) Architectural Finishing System and PPG Rez Stain Systems unless noted otherwise.

2.2 MATERIAL USE

2.2.1 Materials for use shall be of the same manufacturer; materials of different manufacturers shall not be used over one another, except for applications for prime coats on materials or assemblies shop primed.

2.2.2 Primer, sealers, or surface conditioners shall be the product of the manufacturer of the top coats; shall be fully compatible and of the type necessary or required by the manufacturer for the type of system listed or scheduled to produce the suitability of the system for a given surface or problem, and shall be furnished and applied whether listed or not.

2.3 PRIMER

2.3.1 Interior

2.3.1.1 Gypsum wallboard: Latex, Speedhide Quick Drying Latex Primer-Sealer, 6-2.

2.3.1.2 Ferrous Metal: Acrylic latex, Speedhide Water Base Inhibitive Metal Primer, 6-712, white.

2.3.1.3 Concrete and Concrete Masonry Units: Latex, Speedhide Masonry Block Filler, 6-7. Aquapon Polyamide Epoxy Coating - thinned with PPG Epoxy Thinner 97-725 for specific conditions.

2.3.2 Exterior

2.3.2.1 Ferrous Metal: Acrylic latex, Speedhide Water Base Inhibitive Metal Primer, 6-712, white.

2.3.2.2 Galvanized Metal: Acrylic latex, pretreatment with acid wash, Speedhide Water Base Inhibitive Metal Primer, 6-712, white.

2.4 PAINT

2.4.1 Interior

2.4.1.1 Gypsum Wallboard: Acrylic latex, Speedhide Semi-Gloss Latex Enamel, 6-510; acrylic epoxy, Pitt-Glaze Acrylic-Epoxy Semi-Gloss Water Base Coating, 16-line.

2.4.1.2 Ferrous Metal: Acrylic latex, Speedhide Semi-Gloss Latex Enamel, 6-510.

2.4.1.3 Concrete and Concrete Masonry Units: Acrylic latex, Speedhide Semi-Gloss Latex Enamel, 6-510; Acrylic Epoxy, Pitt-Glaze Acrylic-Epoxy Semi-Gloss Water Base Coating, 16-line.

2.4.2 Exterior

2.4.2.1 Ferrous Metal: Acrylic latex, sun-proof, Semi-Gloss Latex House and Trim Paint, 78-300.

2.4.2.2 Galvanized Metal: Acrylic latex, sun-proof, Semi-Gloss Latex House and Trim Paint, 78-300.

2.5 STAIN

2.5.1 Wood: Stain, Semi-transparent Alkyd-Oil Interior Stain, 77-302.

2.5.2 Wood: Finish, Polyurethane Satin Clear Plastic Interior Coating, 77-9.

2.6 SEALER

2.6.1 Concrete: Clear sealer, Horn Clear Seal 150, A. C. Horn, Inc.
2.6.2 Concrete Masonry Units: Clear sealer, Thompson Water Seal, Thompson. ADD-1

PART 3 - EXECUTION

3.1 SURFACES TO BE COATED: Coat all surfaces except those which have been finished by the manufacturer. Coat factory-primed materials in conformance with this Specification except for the prime coat.

3.2 SAFETY: Furnish and maintain closed metal containers for the disposal of waste materials at the job site. Place materials that have become spotted or soaked with paint, oil, or solvents in these containers. Remove such containers from the job site each day.

3.3 ENVIRONMENT FOR COATING

3.3.1 Coat interior surfaces after all doors and windows have been installed and glazed, the heating equipment has been installed and is in operation, and the building has been maintained above 50 F for at least 72 hours. Do not apply coating materials when the temperature of the surface exceeds 90 F.

3.3.2 Immediately before the application of coating materials, the space or area to receive such coating shall be swept and thoroughly dusted in such a manner as to preclude the precipitation of deleterious materials on the coated surfaces or their entrainment in the coating materials.

3.3.3 Provide and install drop cloths, masking tape, and any other protective devices required to protect material adjacent to the areas being coated. Spatter, smears, droppings, and over-run of coating materials shall be removed as coating progresses.

3.4 SURFACE PREPARATION

3.4.1 Surfaces to be coated shall be in proper condition to accept and assure the proper adhesion of the coating system.

3.4.2 In addition to preparatory sanding, each coat, except the last, shall be lightly sanded as required to remove surface blemishes. Use sandpaper appropriate to the finish required.

3.5 MIXING MATERIALS

3.5.1 Agitate ready-mixed material, in original containers, in a vibratory-type paint mixer for a period of from three to ten minutes, then stir thoroughly and "box" for uniformity.

3.6 COATING

3.6.1 Apply coating materials to a uniform film thickness, showing no runs, sags, crawls, brush marks, overspray, or other defects.

3.6.2 Succeeding coats shall not be applied until preceding coat is thoroughly dry. Follow coating manufacturer's written instructions regarding time required for curing of materials between coats.

3.7 CLEAN-UP

3.7.1 At the completion of each day, remove all painting materials, containers, rags, cloths, brushes, or other equipment from the building.

3.7.2 After painting has been completed, make a detailed inspection of paint finish and carefully remove spatter from adjoining work, particularly from glass, plumbing fixtures, tiles, and trim.

3.8 PAINTING SYSTEMS

| | | Minimum Dry Film |
|---|---|---|
| 3.8.1 | Interior | |
| 3.8.1.1 | Gypsum drywall, acrylic latex | |
| | Primer - one coat latex | 1.0 mils/coat |
| | Finish - two coats acrylic latex | 1.4 mils/coat |
| 3.8.1.2 | Gypsum drywall, acrylic epoxy | |
| | Primer - one coat latex | 1.0 mils/coat |
| | Finish - two coats acrylic epoxy | 2.7 mils/coat |
| 3.8.1.3 | Ferrous metal, acrylic latex | |
| | Primer - one coat acrylic latex (touch-up primer for shop primed surfaces) | 2.0 mils/coat |
| | Finish - two coats acrylic latex | 1.4 mils/coat |
| 3.8.1.4 | Concrete and CMU, acrylic latex | |
| | Primer - one coat latex | 5.5 mils/coat |
| | Finish - two coats acrylic latex | 1.4 mils/coat |
| 3.8.1.5 | Concrete and CMU, acrylic epoxy | |
| | Primer - one coat latex | 1.0 mils/coat |
| | Finish - two coats acrylic epoxy | 2.7 mils/coat |
| 3.8.1.6 | Wood - stain and finish | |
| | Finish - one coat stain | 1.2 mils/coat |
| | Finish - two coats polyurethane finish | 1.1 mils/coat |
| 3.8.1.7 | Safety Shower Area - acrylic latex | |
| | Primer - one coat latex | 2.0 mils/coat |
| | Finish - two coats acrylic latex | 1.4 mils/coat |
| 3.8.1.8 | Concrete floors, clear sealer | |
| | Finish - one coat at rate of 200 square feet per gallon | |
| 3.8.2 | Exterior | |
| 3.8.2.1 | Ferrous metal, acrylic latex | |
| | Primer - one coat acrylic latex | 2.0 mils/coat |
| | Finish - two coats acrylic latex | 1.3 mils/coat |
| 3.8.2.2 | Galvanized metal, acrylic latex | |
| | Primer - pretreatment and one coat acrylic latex | 2.0 mils/coat |
| | Finish - two coats acrylic latex | 1.3 mils/coat |
| 3.8.2.3 | Concrete masonry units | |
| | Sealer finish - 2 coats at the rate of 100 sq ft per gallon | |

ADD-1

3.9 COLOR SCHEDULE: Colors selected from PPG Design-a-Color System.

3.9.1 Interior

3.9.1.1 Storage Cells, Packaging, and Sampling Area, Packaging/Material Handling Area: Walls and structural steel, No. 2541 Abbey; doors and frames, including door Nos. 8 and 22, No. 2751 Chromium Gray.

3.9.1.2 Corridor, Restroom/Locker Rooms, Office: Walls and ceiling, No. 2517 Abbey white; doors and frames, No. 3606 Cork.

3.9.1.3 Safety Shower Areas: Provide 4 inch wide diagonal stripes, alternating colors of safety green and porcelain white, at locations as follows:

Floor: 3 foot wide square directly below shower head and adjacent to walls.

Walls: 3 foot wide by 7 foot high directly behind and adjacent to the painted floor area.

3.9.1.4 Class I, Division I Area: Provide 4 inch wide diagonal stripes, alternating colors of safety green and porcelain white at floor location shown on Drawing H-6-1561.

3.9.1.5 Wood Cabinets: Stain, Butternut.

3.9.2 Exterior

3.9.2.1 Doors and Frames: No. 2751, Chromium Gray.

3.9.2.2 Gutters, Downspouts, Fascia, Miscellaneous Metals: No. 2751, Chromium Gray.

END OF SECTION

SECTION 10160

METAL TOILET COMPARTMENTS

PART 1 - GENERAL

1.1 SUBMITTALS: Refer to Section 01300 for submittal procedures.

1.2 DELIVERY, STORAGE, AND PROTECTION: Deliver materials in their original sealed packages. Store and handle materials in a manner which will protect them from damage. Store above ground and protect against moisture and physical damage.

PART 2 - PRODUCTS

2.1 TOILET PARTITIONS:

2.1.1 Overhead-braced type, with baked enamel finish on galvanized-bonderized steel for partitions, pilasters, and doors. Color: ~~66 Apricot~~ 823-Buff Manufactured by ~~Sanymetal Products Co.~~ U. S. Gypsum Co. DT #108

2.1.2 Doors and Partitions: 1 inch thick, with honeycomb cores bonded to face panels.

2.1.3 Pilasters: 1-1/4 inch thick, assembled over a honeycomb core, equipped with integral adjustable floor anchors and leveling devices, covered with vandal-proof stainless steel shoes.

2.1.4 Hardware and Trim: Stainless steel or chromium-plated brass in accordance with the manufacturer's written instructions. Tamperproof screws. One combination coat hook and bumper on the inside of each door.

2.2 URINAL SCREENS: Flush wall-hung type, 30 inch x 42 inch x 1 inch thick, with porcelain enamel finish. Provide with manufacturer's standard fastening devices. Color: ~~66 Apricot~~ 823-Buff Manufactured by ~~Sanymetal Products Co.~~ U. S. Gypsum Co.

2.3 SHOWER: Showermaster shower stall, solid phenolic core, baked acrylic finish. Size 36 inches x 36 inches x 82 inches with precast terrazo receptor and curtain. Color: To match toilet partitions. Manufactured by Sanymetal Products Co.

PART 3 - EXECUTION

3.1 PREPARATION: Install blocking in cavity walls for attachment of partitions and screens.

3.2 INSTALLATION

3.2.1 Install partitions straight, level, and plumb as shown on the Drawings.

3.2.2 Install floor anchors and wall anchors to structure to provide rigid anchorage.

END OF SECTION

SECTION 10440

SIGNS

PART 1 - GENERAL

1.1 SUBMITTALS: Refer to Section 01300 for submittal procedures.

PART 2 - PRODUCTS

2.1 SIGNAGE

2.1.1 Signage shall be as manufactured by Inland Pacific Architectural Signage Systems.

2.1.2 Lettered plaques shall be minimum .080 mil finish aluminum. Letters shall be pre-spaced, applied vinyl die-cut, adhered to front surface. Letter style shall be Helvetica Medium. Copy margins shall be 1 inch top and sides.

2.1.3 Graphic symbols shall be Type A6 and A7 (men and women symbols). Graphic process shall be Type A.

2.2 Provide the following signage at locations as follows:

2.2.1 Caution Explosion Relief Area: 6 inch high letters, mount at height of 6 feet above grade and centered on the controlled release wall system, one required.

2.2.2 Caution Explosion Relief Area: 3 inch high letters, center mount on door No. 13, two feet from top, one required. Copy to be multiple line arrangement.

2.2.3 214D: 3 inch high letters, mount at height 6 feet above grade and adjacent to door No. 8, one required.

2.2.4 A 6 inch by 6 inch graphic symbol shall be provided for the men's and women's restroom entry door.

2.2.5 Dispensing Area: 4 inch high letters, mount at height of 6 feet above floor on the inside surface of the controlled release wall system, centered in the Class I, Division 1 Area.

PART 3 - EXECUTION

3.1 Signage shall be surface mounted with appropriate fasteners as required for the specific conditions of use. Exterior fasteners shall provide weathertight condition.

END OF SECTION

SECTION 10500

LOCKERS

PART 1 - GENERAL

1.1 SUBMITTALS: Refer to Section 01300 for submittal procedures.

1.2 DELIVERY, STORAGE, AND PROTECTION: Deliver materials in their original sealed packages. Store and handle materials in a manner which will protect them from damage. Store above ground and protect against moisture and physical damage.

PART 2 - PRODUCTS

2.1 METAL LOCKERS

2.1.1 Manufactured by the Interior Steel Equipment Co. ~~As manufactured by Lyon Metal Products.~~ DT #109

2.1.2 Single-tier locker 15 inches wide by 15 inches deep by 72 inches high.

2.1.3 Lockers to be furnished with continuous sloping tops.

2.1.4 Color to be ~~No. 7 Maize.~~ #53 Tan.

2.2 BENCHES

2.2.1 As manufactured by Lyon Metal Products.

2.2.2 Hardwood seat, 9-1/2 inches wide by 46 inches long by 1-1/4 inches thick, with manufacturer's standard clear finish.

2.2.3 Tubular steel pedestals, flanged for bolt attachment to the floor, finish to match lockers.

PART 3 - EXECUTION

3.1 INSTALLATION

3.1.1 Assemble and install all metal lockers and benches in accordance with the manufacturer's written instructions. Install lockers accurately aligned, flush, level, and plumb. Make all joints and fastenings tight.

3.1.2 Anchor lockers and benches securely to the floor, base, and wall.

3.1.3 Protect all finish until the completion of this project.

END OF SECTION

SECTION 10670

STORAGE SHELVING

PART 1 - GENERAL

1.1 SUBMITTALS: Refer to Section 01300 for submittal procedures.

1.2 DELIVERY, STORAGE, AND PROTECTION: Deliver materials in their original sealed packages. Store and handle materials in a manner which will protect them from damage. Store above ground and protect against moisture and physical damage.

PART 2 - PRODUCTS

2.1 OPEN SHELVING: Modular open wire shelving, Postmaster series, as manufactured by Hodges, size 18 inches by 48 inches by 84 inches. All stainless steel construction with four shelves per unit. See Drawing for locations. Include side ledges, Part No. SPE 300-3 and back ledges, Part No. SPD 048-3 to the open shelving. DFC #5

2.2 STORAGE CABINET AND CLOSED SHELVING: Clip style steel shelving, ~~8000 Series as manufactured~~ by ~~Lyon Metal Products, Inc.~~ Penco Products. See Drawing for locations. DT #106

2.2.1 Six shelf unit, capacity per shelf of 600 lbs minimum, with one-piece back and sides for each unit.

2.2.2 Finish to be manufacturer's standard grey color.

2.2.3 Storage cabinets: Size 18 inches deep by 36 inches wide by 84 inches high with swing doors, base strip, and built-in keylock.

2.2.4 Closed shelving: Size 12 inches deep by 36 inches wide by 84 inches high.

PART 3 - EXECUTION

3.1 INSTALLATION

3.1.1 Assemble and install all storage shelving in strict accordance with the manufacturer's written instructions. Install accurately aligned, flush, level, and plumb. Make all joints and fastenings tight.

3.2 PROTECTION

3.2.1 Protect all finish until completion of this project.

END OF SECTION

SECTION 10800

TOILET ROOM ACCESSORIES

PART 1 - GENERAL

1.1 SUBMITTALS: Refer to Section 01300 for submittal procedures.

1.2 DELIVERY, STORAGE, AND PROTECTION: Deliver materials in their original sealed packages. Store and handle materials in a manner which will protect them from damage. Store above ground and protect against moisture and physical damage.

PART 2 - PRODUCTS

2.1 COMBINATION PAPER TOWEL DISPENSER AND WASTE RECEPTACLE: Parker No. 695-2, semi-recessed unit with 2 inch skirt. DT #10

2.2 TOILET PAPER HOLDER: ~~Parker No. 964 single holder.~~ Bobrick No. B-264 single roll toilet tissue holder.

2.3 MIRROR: ~~Parker No. 54020.~~ Bobrick No. B-294. Tilted mirror with shelf, #B-295 Mirror size 16" x ~~30"~~ 24".

2.4 SOAP DISPENSER: ~~Parker No. 30-L-SS, horizontal dispenser for liquid soap.~~ Bobrick B-12, liquid soap dispenser.

2.5 SANITARY NAPKIN DISPENSER: ~~Parker No. 693SM.~~ Bobrick No. B-2802. Mechanism set for no coin operation. Surface mounted.

2.6 SANITARY NAPKIN RECEPTACLE: ~~Parker No. 606S~~ Bobrick No. B-271, surface mounted with shelf.

2.7 MOP AND BROOM HOLDER: ~~Parker No. 608x24,~~ Bobrick No. B-223, with 3 holders.

2.8 GRAB BAR

a. ~~Parker No. 624-10-X2-36"~~ Barker No. B-490 exposed Type J imbedded plate.

b. ~~Parker No. 624-24-X2-52"~~ Barker No. B-4937 exposed partition mounting.

2.9 FASTENERS

2.9.1 All exposed fasteners to match finish of accessories.

2.9.2 Provide back-up plates for attachment of accessories to cavity walls.

PART 3 - EXECUTION

3.1 Install back-up plates for toilet accessories in all stud and furred walls.

3.2 Install all accessories securely with fasteners extending into the surrounding construction, back-up plates, or anchors.

3.3 Install accessories as shown on the Drawings and in accordance with the manufacturer's written instructions.

3.4 Install accessories in the following locations except where shown otherwise on the Drawings:

3.4.1 Combination Paper Towel Dispenser and Waste Receptacle: 1 in each toilet room.

3.4.2 Toilet Paper Holder: 1 in each water closet.

3.4.3 Mirror: 1 in each toilet room.

3.4.4 Soap Dispenser: 1 for each lavatory

3.4.5 Sanitary Napkin Dispenser: 1 in women's toilet room.

3.4.6 Sanitary Napkin Receptacle: 1 in women's toilet room.

3.4.7 Mop and Broom Holder: 1 in janitor's area.

3.5 Mount grab bars at 33 inches to center line.

END OF SECTION

SECTION 15300

FIRE PROTECTION

PART 1 - GENERAL

1.1 SUBMITTALS: Refer to Section 01300 for submittal procedures.

1.1.1 Approval Data: Submit the information listed in Column 5 of the Vendor Data List in this Section.

1.1.2 Certified Vendor Information (CVI): Submit information listed in Column 6 of the Vendor Data List in this Section.

1.1.3 Design/Fabrication Drawings: Submit Design, Fabrication, and Installation Drawings of the wet pipe sprinkler system. All hydraulic data points shall be shown on the Drawings. The complete fire sprinkler system design package, at the time of submittal for approval, shall be stamped by a professional fire protection engineer.

1.1.4 Calculation Data Sheets: Submit hydraulic calculations for each design area in an easy to read tabular format, meeting the requirements and recommendations of NFPA 13, including Appendix A.

1.1.5 As-Built Drawings: Submit As-built Drawings of the wet pipe sprinkler system.

1.1.6 NFPA Test Certificate: Complete a Contractor's Material and Test Certificate, in accordance with NFPA 13, Section 1-12.

1.2 WELDING DOCUMENTATION: The fabricator shall ensure that welders in his employ are properly qualified in accordance with AWS and/or ANSI requirements before performing shop or field welding on structural steel components which are a part of this section. Welder qualification test results shall be made available to the Government's Representative upon request. AWS and/or ANSI welding procedures proposed for the work of this Section shall be subject to review by the Government's Representative.

PART 2 - PRODUCTS

2.1 GENERAL

2.1.1 All components of the new wet pipe sprinkler system, if not designated in this Specification and the Contract Drawings by a manufacturer's name and model/figure number, shall be current products of the manufacturer and shall be UL listed or FM approved for the use intended.

2.1.2 The sprinkler system shall include a minimum 6 inch alarm check valve supplied with standard trim including a retard chamber, a fire department connection, flow alarm pressure switch, a system main drain valve, and water motor alarm gong.

2.2 PIPING

2.2.1 Pipe and fittings shall meet the requirements of NFPA 13. Piping shall be steel with threaded or grooved type (rubber gasketed) fittings. Rubber gasketed fittings for use with plain end pipe shall not be used.

2.2.2 Flexible Couplings: Bolted sleeve type for use with grooved-end pipe, with rubber rings for sealing.

2.3 FIRE DEPARTMENT CONNECTION: The Fire Department connection shall be brass finish and furnished with self-closing double clappers, plugs and chains, automatic balldrip valve, and escutcheon plate. The connection shall be a 4 inch IP x 2-1/2 inch HT x 2-1/2 inch HT. Hose threads shall be National Standard Fire Hose threads, 7-1/2 TPI.

2.4 WATER MOTOR ALARM GONG: Weatherproof mechanical gong with hood, complete with drain and interconnecting piping.

2.5 SWITCHES

2.5.1 The flow alarm pressure switch for installation on the sprinkler system retard chamber shall have pressure-actuated, normally-open contacts.

2.6 AUTOMATIC SPRINKLERS

2.6.1 Automatic sprinklers shall have nominal 1/2 inch diameter orifices and be rated for ordinary temperature classification, unless other temperature ratings are required by the sprinkler code.

2.7 SPRINKLER HEAD GUARDS: Formed wire or forged steel, suitable for use with upright or pendent sprinklers, and which can be attached or removed without disturbing the sprinkler head.

2.8 IDENTIFICATION LABELS AND SIGNS

2.8.1 Labels: Fire protection piping identification shall consist of a label approximately 2-1/4 inches by 14 inches bearing the words "FIRE PROTECTION WATER" and a direction arrow approximately 2-1/4 inches by 7 inches. Labels shall have adhesive backing.

2.8.2 Signs: Permanent type identification signs shall be installed at all control, drain, test, and alarm valves. The legend shall include the warning of Fire Department response to the operation of the valve.

2.9 SEALANT: Elastomeric sealant for pipe penetrations shall be a light-colored, polysulfide-base compound, meeting the requirements of FS TT-S-00230, Type II.

2.10 PAINTING MATERIALS: See Section 09900 of this Specification.

2.11 SPRINKLER CABINET: Provide a sprinkler cabinet with the required number of sprinkler heads of all ratings and types installed and a sprinkler wrench for each system and locate adjacent to the riser.

PART 3 - EXECUTION

3.1 INSTALLATION OF PROTECTION SYSTEMS

3.1.1 General

3.1.1.1 The detailed design of the fire sprinkler system shall be prepared under the supervision of a licensed professional fire protection engineer.

3.1.1.2 The personnel area will be designed for ordinary hazard, Group I requirements. Density shall be .14 gpm per square foot.

3.1.1.3 The packaging/sampling area and the loading area will be designed for ordinary hazard, Group 3 requirements. Density shall be .19 gpm per square foot.

3.1.1.4 The storage cells will be designed for extra hazard, Group 1 requirements. Density shall be .25 gpm per square foot except the flammable liquid storage areas shall be .30 gpm per square foot.

3.1.1.5 Outside hose requirements shall be as defined in NFPA 13, Table 2-2.1(B). Available water supply at the 609A Building fire hydrant is static of 79 psi, residual of 39 psi, and with 910 gpm flowing.

3.1.1.6 Install the wet pipe sprinkler system in accordance with NFPA 13 for the specified area classifications. Design areas for sprinkler operation shall be as defined by the 2-hour and 4-hour fire walls.

3.1.1.7 Supply the new sprinkler system from the new 8 inch underground main shown on Drawing No. H-6-1556.

3.1.1.8 Coordinate requirements for interruption of existing services and for Fire Department stand-by with the Government's Representative.

3.1.1.9 Protect new sprinkler system piping from damage by earthquake, by use of proper clearance around penetration holes, flexible couplings, and sway bracing, in accordance with NFPA 13, Sections 3-10.3 and A-3-10.3.

3.1.1.10 Pack all sprinkler pipe penetrations through concrete and partition walls with fiberglass or mineral wool packing and seal on both sides with*~~polysulfide sealant.~~ Install escutcheons on sides exposed to view. DFC #7

*a minimum of 1" of 3M brand fire barrier caulk CP 25.

3.1.1.11 Repair all damaged surfaces. Refinish repaired or defaced surfaces to match adjacent undisturbed areas.

3.1.1.12 Terminate exterior discharge, inspectors test, and auxiliary drain lines with 45° elbows, turned down.

3.1.1.13 Provide suitable concrete splash-pads, at exterior discharge locations, on other than paved surfaces.

3.1.1.14 Paint all new wet pipe sprinkler system piping exposed to view, with one coat of zinc chromate primer and one coat of semigloss enamel. Finish color shall be red (No. 21105) as shown in FED STD 595. Surface preparation, including cleaning and primer, shall be in accordance with the requirements specified in Section 09900.

3.1.2 Welding

3.1.2.1 Welding shall be limited to the fabrication of supports or braces, if necessary. No other welding on site will be allowed, except as specified in this Specification or the Design Drawings.

3.1.2.2 Perform all welding of piping and attachments to pressure retaining components in accordance with ANSI/ASME B31.1 and NFPA 13.

3.1.2.3 Perform all welding of steel structural elements in accordance with AWS D1.1.

3.1.2.4 Do not perform welding or flame cutting on or within the building without prior written approval of the Government's Representative.

3.1.2.5 Perform visual weld examination in accordance with the requirements of AWS D1.1, Paragraph 6.5.5, or ANSI/ASME B31.1, Paragraph 136.4.2 as applicable.

3.1.2.6 Perform Dye Penetrant weld examination on tie-in welds, which will not be hydrostatically tested, in accordance with ANSI/ASME B31.1, Paragraph 136.4.4.

3.1.2.7 & 3.1.2.8 SEE PAGE 15300 - 4a SC-12

3.1.3 Identification

3.1.3.1 Identify piping in accordance with the following:

a. Install labels after painting is completed.

b. Locate labels on the pipe where they can be read easily. Place labels on the bottom quadrant of overhead pipe and the top quadrant of pipe lower than eye level.

c. Identify only feed mains, cross mains, and risers 3 inch nominal diameter and larger.

d. Locate line identification at intervals of approximately 40 feet on unobstructed runs, and on each side of partitions and floors.

3.2 FLUSHING AND TESTING

3.2.1 Furnish all equipment and instruments required to perform the flushing and testing operations described below:

3.2.1.1 Conduct the flushing and testing operations while witnessed by the Government's Representative.

3.2.1.2 Remove and replace all pieces of apparatus, material, or work which fails in flushing or testing operations and retest.

3.2.1.3 Repair damage resulting from flushing or testing to the satisfaction of the Government's Representative.

3.1.2.7 Liquid penetrant examinations shall be performed in accordance with a procedure as required by Article 6, Section V, of the ASME Boiler and Pressure Code. The procedure shall be available at the job site for review at any time by the Government's Representative.

3.1.2.8 Personnel performing liquid penetrant examinations shall have been certified in accordance with the Contractor's written practive which shall meet the requirements of ASNI No. SNT-TC-1A.

3.2.2 Flushing: Flush the new sprinkler system piping as described below:

3.2.2.1 Flush sprinkler piping by feeding water into the system through the alarm valve to provide velocity of not less than 7 feet per second in the piping being flushed.

3.2.2.2 Discharge flushing water from the end of the cross mains.

3.2.2.3 Discharge flushing water to a point designated by the Government's Representative. Flushing shall continue until the effluent runs clear and free of foreign matter.

3.2.2.4 Provide documented evidence that flushing has been accomplished in accordance with this Specification. Deliver to the Government's Representative before testing.

3.2.3 Hydrostatic Test

3.2.3.1 Hydrostatically test the new sprinkler system in accordance with NFPA 13, Section 1-11.2.

3.2.3.2 Use a hydrostatic test pressure of 200 psi.

3.2.3.3 Leaks in piping will not be acceptable.

4187K/0245K

Project No. B-526

Title Non-Radioactive Hazardous Chemical Waste Facility

**KAISER ENGINEERS HANFORD**

## VENDOR DATA LIST

("X" Indicates Required Data)

| 1 EPN Identification | 2 Description | 3 Reference Drawing | 4 Specification Paragraph | 5 Approval/Data: Dimensional Drawings | Equipment Weights | Specifications | Material Description | Performance Data | Circuit or Control Diagrams | Data Sheets | Illustrative Cuts | Installation Instructions | 6 Certified Vendor Information (CVI): Dimensional Drawings | Equipment Weights | Specifications | Certified Test Data | Circuit or Control Diagram | Instructions: Installation | Operation | Maintenance | Spare Parts List | 7 Remarks |
|---|---|---|---|---|---|---|---|---|---|---|---|---|---|---|---|---|---|---|---|---|---|---|
| 1 | Alarm Check Valve | | 2.1.2 | | | | | | | | X | | X | | | | | | | X | X | Including all trim |
| 2 | Water Motor Alarm Gong | | 2.4 | | | | | | | | X | | | | | | | | | | | |
| 3 | Fire Department Connection (FDC) | | 2.3 | | | | | | | | X | | | | | | | | | | | |
| 4 | Check Valve for FDC | | 2.1.2 | | | | | | | | X | | | | | | | | | | | |
| 5 | Flow Alarm Pressure Swtch | | 2.5 | | | | | | | | X | X | | | | | | | | | | |
| 6 | Sprinkler Heads | | 2.6 | | | | | | | | X | | | | | | | | | | | |
| 7 | Flexible Couplings | | 2.2 | | | | | | | | X | | | | | | | | | | | |

END OF SECTION

15300 - 6

B-526-C1

DOE Richland

I-116 (3-82)

SECTION 15400

PLUMBING

PART 1 - GENERAL

1.1 SUBMITTALS: Refer to Section 01300 for submittal procedures.

1.1.1 Approval Data: Submit the information requested in Column 5 of the Vendor Data List in this Section.

1.1.2 Certified Vendor Information (CVI): Submit the information specified in Column 6 of the Vendor Data List in this Section.

1.1.3 Method for Disposal of Flushing Water: Prepare a method for disposal of flushing water used for testing.

1.2 QUALIFICATION OF WELDING PERSONNEL AND PROCEDURES

1.2.1 See Section 05120 for welding of structural steel.

PART 2 - PRODUCTS

2.1 GENERAL REQUIREMENTS

2.1.1 The equipment to be furnished under this Specification shall be new and the standard product of the manufacturer. Where two or more units of the same class of equipment are required, these units shall be products of a single manufacturer; however, the component parts of the system need not be the products of the same manufacturer unless otherwise specified. Size and capacity of the equipment and materials shall be as shown on the Contract Drawings, or as specified.

2.1.2 Equipment ratings and sizes are intended to establish minimum requirements for the equipment.

2.1.3 All fixtures shall be provided with isolation valves in addition to those provided as part of the fixture trim.

2.2 PLUMBING FIXTURES

2.2.1 Water Closets: Wall mounted vitreous china siphon jet elongated bowl, Kohler Co, "Kingston Water Guard" No. K-4430-ET, with No. K-4670-C white seat, Sloan 110-3 flush valve, and floor mounted adjustable supporting chair carrier.

2.2.2 Lavatories: Kohler Co, 20 inches by 18 inches "Greenwich" No. K-2032, drilled for concealed arm carrier. Furnish with K-7401 faucet, K-7606 angle supplies with stops, K-9000 "P" trap, and ~~floor~~ mounted fixture support with concealed arms. Smith fig. 417-D-Y DT #33A

2.2.3 Urinal: Kohler Co, "Bardon Water-Guard" K-4980-T with Sloan 186 flush valve and wall hangers.

2.2.4 Service Sink: Kohler Co, "Sudbury" K-6650 with wall hangers, K-8905 faucet, K-8934 stainless steel rim guards, and K-6673 3 inch trap with strainer.

2.2.5 Electric Water Cooler: Wall mounted, air cooled, self contained refrigerated type with one piece basin and back-splash. Capacity shall be 8 gph of 50 F water from 80 F entering water and an ambient of 90 F. Unit wiring shall be suitable for 120 volt, single phase electric power. Unit shall be Elkay Manuf. Co., Model No. EHFS-8 for handicapped application. Color shall be grey beige.

2.2.6 Kitchen Sink: Kohler Co, "Mayfield" 24 inches x 21 inches No. K-5960 with K-11925 faucet, K-8801 strainer, K-9000 "P" trap, and K-6699 metal frame trim.

2.2.7 Lab Sink and Basin: See Drawing H-6-1554 for lab sink and basin. Equip lab sink with Duralab combination deck mount mixing faucet, 9 inch swing spout, aerator outlet, integral mounting shank, and crumb cup sink outlet basket strainer, 1-1/2 inch size.

2.2.8 Water Heater: A. O. Smith, Model KEN-52, 50 gallon capacity, 18.95 gph recovery with 4.5 kW at 100 F rise, 230 volt, single phase.

2.2.9 Water Heater: A. O. Smith, Model ELS-10, 10 gallon capacity, 6.15 gph recovery with 1.5 kW at 100 F rise, 120 volt, single phase.

2.2.10 Floor Drains: Zurn Model Z-455 with integral trap, floor level cleanout, and adjustable nickel bronze strainer, size 2 inch with 5 inch strainer.

2.2.11 Shock Absorbers: Zurn Model Z-1700, size 400. See Drawings for locations.

2.2.12 Backflow Preventer: Hersey Products Inc., "AERGAP" Model FRP-II, with air gap drain funnel. See Drawing for size and location.

2.2.13 Wall Hydrant: Nonfreeze type, Zurn Z-1315, 3/4 inch with loose key, 3/4 inch hose threads, with Watts Model No. 8A vacuum breaker.

2.2.14 Hose Bibb: McMaster-Carr, Model 4800K12, 3/4 inch male pipe thread inlet, 3/4 inch hose thread outlet with Watts Model No. 8A vacuum breaker.

2.2.15 Safety Shower/Eyewash: Bradley Model S1931 with self-closing shower and eyewash valves.

2.2.16 Shower: Shower stalls shall be equipped with brass drain, mixing valve, pressure balancing line valve, and shower head. See Section 10160 for shower stalls.

2.2.17 Air Gap: Zurn Model Z-1025, with female thread inlet and outlet. See Drawings for location and size.

2.3 PIPE AND FITTINGS: As specified in the Pipe Codes and detailed on the Drawings.

2.4 PIPE JOINING MATERIALS: Sealants for threaded piping joints shall be Teflon type tape, Scotch Brand Pipe Sealant Tape No. 547; Chemtrol Dri-Seal No. 5; or Crane Packing Co "Thread-Tape".

2.5 HANGERS AND SUPPORTS

2.5.1 Hilti HD1 drop-in anchors, 3/8 inch bolt size.

2.5.2 Unistrut channels and clamps.

2.6 PIPE PENETRATION MATERIALS

2.6.1 Sealer for Floor Penetrations: WR Grace "Hornflex", Dap "Flexiseal", or PRC 5000, or GE Penetration RTV 7403. DT #117

2.6.2 Floor and Ceiling Plates: Chrome-plated, spring-loaded type.

2.7 PIPE INSULATION

2.7.1 Interior Sanitary Hot and Cold Water Piping: Johns-Manville Flame-Safe fiberglass insulation with average thermal conductivity not to exceed 0.22 BTU-In/Hr-$F^2$-F at a mean temperature of 75 F. Accessories, such as adhesives, mastics, cements, tapes, and cloth for fittings shall have the same component ratings as given above. Insulation thickness shall be 1/2 inch.

2.7.2 Jacketing: A laminate of white kraft and foil reinforced with glass and applied to the insulation at the factory. Jackets shall have a minimum 1-1/2 inch longitudinal sealing lap. Butt joints shall be sealed with a 3 inch wide strip of jacket material. Longitudinal jacket laps and butt strips shall be secured with an adhesive in accordance with the insulation manufacturer's written instructions.

2.7.3 Insulation for Fittings and Valves: Same type as used for pipe. Open-weave fiberglass tape or cloth shall be used where necessary to hold insulation in place and to fair-in fittings and valves.

PART 3 - EXECUTION

3.1 FABRICATION AND INSTALLATION OF PIPING

3.1.1 Fabricate and install piping in accordance with the UPC, the attached Pipe Codes, the Drawings, and this Specification.

3.1.2 Promptly report all conflicts in design locations of piping with ductwork, lighting fixtures, etc, to the Government's Representative.

3.1.3 Keep piping systems clean during all phases of work. Once fabrication has started on any length of pipe, keep the open ends of piping plugged or capped when installation is not in progress to prevent the entry of dirt and other foreign materials.

3.1.4 Remove burrs from mating threads in threaded piping before assembly. Ream pipe to the nominal inside diameter after cutting.

3.1.5 Seal floor and wall penetrations airtight and watertight with the sealing compound specified in this Section.

3.1.6 Install floor and ceiling plates at piping penetrations in building floors and at all piping penetrations in building walls, partitions, and ceilings.

3.2 CAST IRON SOIL PIPE

3.2.1 Lay cast iron soil pipe in accordance with the following:

3.2.1.1 Protect pipe against impact shocks and dropping. Immediately before laying, inspect the pipe and discard all damaged sections.

3.2.1.2 Start laying pipe in finished trenches at the lowest point of the run and progress upgrade with spigot ends pointed in the direction of flow. Support the full length of the pipe.

3.2.1.3 Carefully center all pipe joints so when the pipe is laid, a pipeline with a uniform invert is formed.

3.2.1.4 Firmly set pipe to resist deformation, according to line and grade, preparatory to making pipe joints.

3.2.2 Hubless soil pipe installation shall meet the requirements of IAPMO IS 6.

3.3 INSTALLATION OF PIPE HANGERS AND SUPPORTS

3.3.1 Except where shown otherwise on the Drawings, pipe supports and hangers shall be as follows:

3.3.1.1 Support vertical piping at least once each 12 feet of run.

3.3.1.2 Location of supports shall be the suggested maximum spacing in the UPC, with additional supports close to all concentrated loads such as valves and specialties.

3.3.1.3 Installation of drop-in anchors shall be in accordance with the manufacturer's written instructions. (Cutting of embedded steel is unacceptable.)

3.4 CLEANING

3.4.1 Flush piping with water, immediately before leak testing, until the effluent is clear and contains no visible particulate matter, but in no case for less than one minute.

3.4.2 Raw water may be used for flushing sanitary waste, vent, and drain lines. Use cold sanitary water for flushing hot and cold waterlines. Flush sanitary waterlines before disinfecting.

3.4.3 The flow for flushing shall be sufficient to produce a velocity of at least 5 feet per second with the pipe full.

3.4.4 Remove all water from lines immediately after flushing is completed.

3.4.5 Prepare the method for disposal of flushing water. Deliver to the Government's Representative for approval before flushing.

3.4.6 Provide documented evidence that flushing has been accomplished in accordance with this Specification. Deliver to the Government's Representative before leak/pressure testing.

3.5 HYDROSTATIC TESTING

3.5.1 Perform hydrostatic tests as designated in the applicable Pipe Codes (attached).

3.5.1.1 Furnish all instruments, facilities, and labor required to conduct the tests.

3.5.1.2 Perform testing in the presence of and to the satisfaction of the Government's Representative.

3.5.1.3 Complete testing before pipe insulation is applied to above ground lines and before backfilling is completed over lines to be buried or encased.

3.5.1.4 Verify that all air has been expelled from piping before applying the hydrostatic pressure.

3.5.1.5 Slowly raise pressure in section of piping undergoing test to the specified test pressure.

3.5.1.6 Carefully examine all piping, fittings, and joints during testing and check manual valves for proper operation. All leaks shall be repaired and the leaking section of piping retested.

3.5.1.7 Duration of leak tests shall be at least ten minutes with no leaks or drop in test pressure, and for such additional time as may be necessary to conduct the examination for leakage.

3.5.1.8 Install one temporary relief valve during leak testing of piping systems. The relief valve shall have a discharge capacity of at least 125% of the capacity of the pressurizing device and be set to operate at not more than 110% of the test pressure. Tag each relief valve used to show serial number, calibration date, and pressure setting.

3.5.1.9 Test hot and cold sanitary waterlines in accordance with the UPC.

3.5.1.10 Test soil and vent lines in accordance with the UPC.

3.5.1.11 Document leak/pressure testing of each piping system on "Leak/ Pressure Test Certification" Form RL-F-6410.2 (sample appended) in accordance with the printed instructions. Forms will be furnished by the Government's Representative. Use one or more forms to describe and record each of the piping systems. Under "Description of Components" describe each piping system in enough detail to be readily correlated to Contract Drawings. For systems tested segmentally, indicate continuity in the "Description" to assure that the entire system has been tested.

3.5.1.12 Remove all water from lines immediately after testing is completed.

3.6 PIPE INSULATION

3.6.1 Method of application and finish shall be as specified unless modifications are approved by the Government's Representative.

3.6.2 Insulate sanitary hot and cold water piping. Unless specified otherwise, it shall include bends, fittings, flanges, and valves forming part of such piping, installed to the thickness for the piping in which they occur.

3.6.3 Insulation shall not be applied on piping until the systems have been leak tested and approved by the Government's Representative.

3.6.4 Insulation shall be of uniform thickness for each pipe size and piece of equipment and shall fit to the surface to which it is applied.

3.6.5 Apply molded pipe covering with end joints butted together. Remove all insulation that does not fit properly and replace.

3.6.6 All insulation shall be free of moisture at time of application.

3.6.7 Surfaces shall be clean and dry and free from moisture, oil, dirt, scale, loose rust, or other foreign material, before any layer of insulating material is applied.

3.6.8 Groove and score insulation where necessary to fit the contours of equipment.

3.6.9 Where pipe hangers are attached directly to the pipe by clamps, cover the clamps, removing part of the inside surface of the insulation, when necessary, to maintain the continuous unbroken outer surface of the pipe covering. Seal the insulation around the hanger clamp with finish cement.

3.6.10 Install insulation in a neat, uniform manner. Seal ends of insulation with insulation cement or with specially-prepared ends supplied with the insulation.

3.6.11 Insulation shall be continuous through wall and other openings and through pipe sleeves.

3.7 DISINFECTING

3.7.1 Following flushing and hydrostatic testing, disinfect all sanitary waterlines in accordance with AWWA C601.

3.7.2 Remove equipment parts subject to damage by the disinfecting solution before the operation, and disinfect before reinstallation.

3.8 PIPE IDENTIFICATION

3.8.1 Identify all piping as to service and direction of flow, in accordance with ANSI A13.1.

PIPE CODE P-1

| Service: | Max Operating Pressure: | Max Operating Temperature: | Test Pressure: |
|---|---|---|---|
| Cold Sanitary Water (CSW) | 60 psig | 80 F | 90 psig |
| Hot Sanitary Water (HSW) | 60 psig | 160 F | 90 psig |

| | |
|---|---|
| Sizes | 1/2" thru 2-1/2" |
| Pipe | Galvanized steel, seamless or welded, ASTM A 120 |
| Wall Thickness | Standard weight |
| Fittings | Class 150 malleable iron, galvanized, threaded, in accordance with ANSI B16.3 |
| Unions | Galvanized malleable iron, threaded, FS WW-U-531, Type B, Class 2 |
| Valves<br>Ball:<br>Gate:<br>Check: | <br>NIBCO T-590-W<br>NIBCO T-124<br>NIBCO T-413-B |
| Cleaning | Flush with water in accordance with this Specification |
| Test | Hydrostatic in accordance with this Specification |
| Disinfect | Disinfect all sanitary waterlines in accordance with this Specification |

PIPE CODE P-2

| Service: | Max Operating Pressure: | Max Operating Temperature: | Test Pressure: |
|---|---|---|---|
| Sanitary Sewer (SNS) | Atmospheric | 160 F | Per UPC |
| Sanitary Sewer Vent (V) | Atmospheric | 160 F | |

| | | |
|---|---|---|
| Size | Above Ground: 2" and Larger | Underground: All sizes |
| Pipe | Hubless cast iron sanitary system in accordance with CISPI 301 | Service weight cast iron soil pipe in accordance with ASTM A 74 |
| Joints | Sealing sleeve with shield and clamp assembly in accordance with CISPI 301 | Hubless cast iron in accordance with the UPC, Section 802. |
| Fittings | Hubless cast iron in accordance with CISPI 301 | Service weight cast iron soil fittings in accordance with ASTM A 74 |
| Cleaning | Flush with water in accordance with this Specification. | |
| Test | In accordance with the UPC, Section 318, Par. 2, Water Test | |

Project No. B-526

Title: Non-Radioactive Hazardous Chemical Waste Facility

**KAISER ENGINEERS HANFORD**

## VENDOR DATA LIST

("X" Indicates Required Data)

| 1 | 2 | 3 | 4 | 5 Approval/Data | | | | | | | | | 6 Certified Vendor Information (CVI) | | | | | | | | | 7 |
|---|---|---|---|---|---|---|---|---|---|---|---|---|---|---|---|---|---|---|---|---|---|---|
| | | | | | | | | | | | | | | | | | | Instructions | | | | |
| EPN Identification | Description | Reference Drawing | Specification Paragraph | Dimensional Drawings | Equipment Weights | Specifications | Material Description | Performance Data | Circuit or Control Diagrams | Data Sheets | Illustrative Cuts | Installation Instructions | Dimensional Drawings | Equipment Weights | Specifications | Certified Test Data | Circuit or Control Diagram | Installation | Operation | Maintenance | Spare Parts List | Remarks |
| 1 | Backflow Preventer | | 2.2.12 | | | | | X | | | | X | | | | | | | | X | | |

15400 - 10

B-526-C1

DOE Richland, W

116 (3-82)

# LEAK/PRESSURE TEST CERTIFICATION

| Project No. | Work Order No./Shop Order No. | Report No. | Code or Standard |
|---|---|---|---|
| | | | |

| Class | Year | Addenda | Stamp ☐ Yes ☐ No | Const. Spec. | Rev. | Test Procedure Title & No. | Rev. |
|---|---|---|---|---|---|---|---|
| | | | | | | | |

Description of Component(s)

**CONTRACTOR PRE-TEST CHECK LIST**

Customer Representative Notified

Date _____ Time _____

Safety Representative Notified

Date _____ Time _____

| Item | Acceptance | Exception | Item | Acceptance | Exception |
|---|---|---|---|---|---|
| Flushing of component to be tested completed. | | | All lines not required for test disconnected or isolated. | | |
| Vents, openings, and relief valve discharge checked. | | | All test equipment checked for tightness. | | |
| Test medium per requirements. Medium _____ | | | Test medium temp. equalized. Temp. _____ (ASME Section III, VIII only) | | |
| Test set up in accordance with above referenced procedure. If exception, explain: | | | | | |
| Test gauge correct range and currently calibrated. Serial No. _____ Range _____ Calib. Due Date _____ | | | | | |
| Pressure relief valve properly set and currently calibrated. Serial No. _____ PSI Setting _____ Calib. Date _____ | | | | | |
| Areas to be inspected chalked prior to pressurization. If exception, explain: | | | | | |
| Soap solution applied to all areas examined while component was pressurized. No Leakage Found _____ Leaks Found and Repaired _____ | | | | | |
| Specified test pressure obtained. Pressure Specified _____ Hold Time Specified _____ Test Press. Obtained _____ A.M. P.M. | | | | | |

CONTRACTOR REPRESENTATIVE ➤ Date

**INSPECTION VERIFICATION**

| | | |
|---|---|---|
| Actual test pressure during inspection _____ | All joints and welded attachments to pressure retaining components chalked/soaped as applicable. ☐ Yes ☐ No* | Pressure test: ☐ Accepted ☐ Rejected* |
| Specified hold time verified at _____ A.M. P.M. | All joints and welded attachments to pressure retaining components visually inspected for leakage. ☐ Yes ☐ No* | |

* Basis of Rejection and/or Comment:

CUSTOMER REPRESENTATIVE ➤ Date

WITNESS - ASME AUTHORIZED INSPECTOR ➤ 15400 - 11 Date B-526-C1

RL-F-6410.2 (4-84)

## INSTRUCTIONS

1. THE FABRICATION OR CONSTRUCTION CONTRACTOR IS RESPONSIBLE TO FILL IN THE UPPER PORTION OF THE LEAK/PRESSURE TEST CERTIFICATION, INCLUDING THE CONTRACTOR PRE-TEST CHECK LIST SECTION. PORTIONS OR BLOCKS NOT APPLICABLE SHALL BE NA'd.

2. THE CONTRACTOR SHALL PRESENT THE LEAK/PRESSURE TEST CERTIFICATION TO THE CUSTOMER'S REPRESENTATIVE AT THE TIME OF TESTING.

3. THE CUSTOMER'S REPRESENTATIVE SHALL COMPLETE THE INSPECTION VERIFICATION SECTION OF THE LEAK/PRESSURE TEST CERTIFICATION AT THE TIME OF TESTING, AND THE RESULTS OF THE TEST WILL BE SO INDICATED. (THE ASME AUTHORIZED INSPECTOR SIGNATURE BLOCK WILL BE NA'd AS APPROPRIATE BY THE CUSTOMER'S REPRESENTATIVE.)

4. THE CUSTOMER'S REPRESENTATIVE WILL PROVIDE A COPY OF THE LEAK/PRESSURE TEST CERTIFICATION TO THE CONTRACTOR UPON COMPLETION OF THE TEST. THE ORIGINAL WILL BE RETAINED BY THE CUSTOMER FOR PERMANENT RECORD.

END OF SECTION

SECTION 15500

HEATING, VENTILATING, AND AIR CONDITIONING

PART 1 - GENERAL

1.1 SUBMITTALS: Refer to Section 01300 for submittal procedures.

1.1.1 Certified Vendor Information (CVI): Submit the information specified in Column 6 of the Vendor Data List in this Section.

1.1.2 Test and Balance Procedure: Submit the forms and a procedure for testing and balancing the air distribution system.

1.1.3 Test and Balance Data: Submit documentation of test and balance data, dated and signed by the Contractor executing said test.

1.2 QUALIFICATION OF WELDING PERSONNEL AND PROCEDURES

1.2.1 See Section 05120 for welding of structural steel.

1.2.2 Personnel and procedures for welding sheet metal shall have been qualified in accordance with AWS D9.1 before welding. Qualification in accordance with ASME Section IX may be substituted for this requirement.

PART 2 - PRODUCTS

2.1 GENERAL REQUIREMENTS

2.1.1 Standard Products: Equipment shall be new and essentially the standard product of the manufacturer. Where two or more units of the same class of equipment are required, these units shall be products of a single manufacturer. The component parts of the system, however, need not be the product of the same manufacturer unless otherwise specified.

2.2 HEAT PUMP SYSTEMS

2.2.1 The heat pump shall be furnished with demand activated electric heat package, emergency heat control, compressor short cycle control, economizer, and indoor thermostat package. The heat pump wiring shall be compatible with a 208 volt, single phase, power supply. Electric heat package wiring shall be compatible with a 208 volt, 3 phase, power supply. Color shall match building trim.

2.2.2 The heat pump shall be Carrier Corp. Model 50YQ030, with Stiles Corp. Model DPPC-5054YQ curb, PPM-5036YQ plenum and platform, and 5-504-8Q economizer with pkg No. 3WR controls (all components including the transformer shall be mounted in the unit). Cooling capacity shall be 28,600 BTUH at ARI 240 Standard conditions. Heat pump shall be supplied with 7.5 kW supplemental heat.

2.2.3 Provide low voltage adjustable thermostat to provide night and weekend setback, automatic or manual changeover from cooling to heating, controls first stage of electric resistance heating, and allows for continuous or cycling indoor fan operation.

2.3 HEAT RECOVERY/EVAPORATIVE COOLING UNIT: The packaged unit shall be completely factory assembled, wired, tested, and shipped in one piece. Unit shall be suitable for outdoor operation with weatherproof construction.

2.3.1 Design and Construction Features

2.3.1.1 Structural and Frame - the base shall be constructed from a minimum 12-gauge, 8-inch deep, formed steel channel having welded construction. The frame shall have welded cross-members to support all major components, prevent bending or deforming, maintain weathertight integrity, and ensure proper equipment alignment. Prior to having the final paint coating applied, the welded steel frame shall be completely coated with chromate-oxide primer. Lugs, for lifting the unit, shall be an integral part of the structural frame.

2.3.1.2 Floor to be continuously welded 14-gauge aluminized steel. Coated steel or materials other than specified will not be accepted. There shall be no penetrations through the floor except for air duct openings and utility openings, which shall have 2-inch high continuously welded collars around entire peripheries. The floor shall be welded to the base frame. The manufacturer shall leak-test the floor at the factory and certify that it will be watertight and leakproof for a period of 5 years from the date of shipment. Thermal insulation having a thickness of 2 inches shall be firmly affixed under the entire floor in a manner such that no floor panels will be visible from below. Insulation will be held in place by adhesives and welded and capped stud pins.

2.3.1.3 The cabinet's outer casing shall be constructed for outdoor use with watertight, 16-gauge galvanized steel throughout to house all components. Cabinets shall be coated with 100% acrylic latex, corrosion and weather-resistant paint meeting FED STD 141b and ASTM E 84 as minimum. Color shall match building trim. The entire cabinet shall be thermally insulated with a minimum of 1 inch thick, 1-1/2 pound density insulation. The thermal insulation shall be fastened to the outer casing by adhesives. All roof and side wall seams shall be positively sealed and capped to prevent water and air leakage. All screws and fasteners penetrating the outer casing shall be gasketed and sealed to prevent leakage. All access doors shall be full double-wall construction, thermally insulated and gasketed to prevent water and air leakage. Access doors shall be swing-out type hinged for ease of access and with positive sealing latches. All openings and access doors shall have rain gutter or full weather hoods with bird screen.

2.3.2 Indirect Cooler Section shall be the air-to-air heat exchanger having a minimum of 500 square feet of surface area per 1000 cfm of supply air. The heat exchanger shall be made of .006 inch thick 1100 alloy aluminum with the surface exposed to water being fully epoxy coated to

protect against corrosion. The heat exchanger shall not be constructed from plastics or treated paper.

2.3.2.1 The indirect cooler shall be furnished with water distribution headers, solenoid valves, drain, overflow, and other components necessary for operation as specified.

2.3.3 Supply fan shall be heavy duty backwardly inclined DWDI centrifugal type with pillow block regreaseable ball bearings, mounted on a spring isolated welded structural steel base. The 2-speed motor shall be mounted on the structural base by means of an adjustable cast steel motor rail-type mounting. The drive shall be adjustable pitch and rated at 150% of the motor horsepower.

2.3.4 Exhaust fan shall be non-sparking, heavy-duty, backwardly-inclined, SWSI centrifugal type with pillow block regreaseable ball bearings, mounted on a spring isolated welded structural steel base. The 2-speed motor shall be mounted on the structural steel base by means of an adjustable cast steel motor rail-type mounting. The drive shall be adjustable pitch and rated at 150% of the motor horsepower.

2.3.5 Connections between the blowers and any stationary member shall be by means of flexible duct connectors.

2.3.6 Standard filters shall be 2 inch thick FARR 30/30 throwaway.

2.3.7 Traversing defrost plate shall be a motor driven plate on a drive screw which is approximately 8 inches wide. The plate blocks the supply air from leaving the core, thereby allowing the hot exhaust air to keep its side of the core free from frost. This control will allow maximum heat recovery during the winter cycle.

2.3.8 Face and by-pass dampers shall be of opposed blade design with a factory mounted modulating damper motor.

2.3.9 Electric heating coils shall be of the open resistive type with all factory mounted controls including, but not limited to: airflow switch, auto reset thermal cutouts, manual reset thermal cutouts, circuit fuses, control transformer, step controller, unit mounted thermostat, and disconnect. Provide a minimum of three stages of electric heat.

2.3.10 Roof curb shall be galvanized, reinforced, heavy gauge, section with 2-inch insulation and wood nailing strip for securing flashing. Curb shall be 12 inches high and provide uniform and level support.

2.3.11 Service outlet shall be supplied by the manufacturer to allow 120 volt service.

2.3.12 Electrical equipment panel shall be a NEMA 12 control panel provided as an integral part of the unit and be provided with hinged access door, an integral NEMA 4 lockable fused-disconnect switch, 2-speed motor starters, and 200 volt-amp, 480/120 volt control transformer.

2.3.13 Controls shall be factory mounted, wired, and tested. Controls shall consist of but not be limited to: heating, discharge modulating thermostat, cooling modulating thermostat, traversing defrost plate thermostat, traversing defrost plate drive motor, indirect evaporative cooling water solenoid valves, summer/winter auto change over thermostat. Provide a remote panel with on/off switch for both exhaust fan and supply fan and manual override on motor speeds.

2.3.14 The packaged heat recovery/evaporative cooling unit shall be ~~Des~~ *~~Champs Laboratories, Inc. Model PKS-8.~~ Unit wiring shall be compatible with DT #33.1 a 480 volt, 3 phase, power supply. Control wiring shall be 120 volt, single phase, power supply.

*York-Shipley, Inc. Model HRC-80.

PERFORMANCE SCHEDULE

| Heat Recovery/Evaporative Cooling Unit | Winter Data | Summer Data |
|---|---|---|
| CFM | 6500 | 8000 |
| Aux Heat | 75 kW | -- |
| Btuh Recovered | 258,000 | 203,000 |
| Btuh Required | 500,000 | 200,000 |
| HP Supply Fan* | 5 | 5 |
| E.S.P. Available | 1.5" | 1.5" |
| Wheel Size | 20" BI-DWDI | 20" BI-DWDI |
| HP Exhaust Fan* | 5 | 5 |
| E.S.P. Available | 1.5" | 1.5" |
| Wheel Size | 27" BI-SWSI | 27" BI-SWSI |
| GPH Water | -- | 60 |
| OA Temperature | 9 F db | 99 F db |
| IA Temperature | 65 F db | 75 F db |

*2-speed motor, 1800/1200 rpm

2.4 RESTROOM EXHAUST FANS: Restroom exhaust fans shall be Nutone Model QT-110 with 885 weather louver wall cap. Unit wiring shall be 120 volt, 1 phase.

2.5 EXHAUST FAN

2.5.1 Exhaust fan shall be Kewaunee No. 5-3301-B2, 510 cfm at 3/4 inches S.P. Equipment fan with weather cover, vibration isolators, fan inlet adapter No. 5-3424-00, and vertical exhaust duct stackhead and transition section No. 5-3400-00.

2.6 DUCT

2.6.1 HVAC Duct

2.6.1.1 Galvanized steel sheet meeting the requirements of ASTM A 527, G90 coating.

2.6.2 HVAC Duct Reinforcement

2.6.2.1 Carbon steel shapes meeting the requirements of ASTM A 36 galvanized in accordance with ASTM A 123.

2.6.3 HVAC Duct Supports and Hangers

2.6.3.1 Unistrut channels and clamps.

2.6.3.2 Carbon steel shapes meeting the requirements of ASTM A 36.

2.6.3.3 Carbon steel rods meeting the requirements of ASTM A 108 with ASTM A 563 nuts and plain washers.

2.6.3.4 Hilti HD1 drop-in anchors, 3/8 inch bolt size.

2.6.4 Fasteners: ASTM A 307, Grade A or B bolts, with heavy hex nuts meeting the requirements of ASTM A 563, UNC threads, bolt head marking not required. Finish to be cadmium plating or electro-galvanizing.

2.6.5 Rivets: Marsen "Klik-Fast" blind pop rivets.

2.6.6 Fabric: Ventfabrics Inc. "Ventglas", 30 ounces per square yard, (finished weight), glass cloth double-coated with neoprene.

2.7 DUCT ACCESSORIES

2.7.1 General Requirements: Duct accessories that are the standard products of a manufacturer may be acceptable, subject to the approval of the Government's Representative. Duct accessories shall be of the same material as the duct.

2.7.2 Turning vanes are required in all rectangular section square elbows. Vanes shall be double thickness, tubular blades tapered to a fine edge. Blades shall be assembled with, and equally spaced on, side runners for installation in elbows with bolts or rivets.

2.7.3 Zinc-Rich Coating: Galvicon MZP metallic zinc paint or ZRC zinc rich coating.

2.8 DUCT INSULATION

2.8.1 Duct insulation and ~~sealant~~ adhesive shall be listed in UL Building Materials Directory and shall carry the UL mark. Insulation and adhesive shall have a UL fire hazard classification for flame spread of not more than 25 and for smoke developed of not more than 50. ADD-1

2.8.2 Thermal insulation for the exterior surfaces of concealed supply and return duct shall be 1½inch thick, *~~Johns-Manville Flexible 800 Series,~~ DT #33.1 spin-glass fiberglass insulation, 1.6 pcf density, with FSK facing.

*Owens-Corning Faced Duct Wrap Series ED-75,

2.8.3 Thermal insulation for the exterior surfaces of exposed supply duct shall be 1-inch thick, Johns-Manville Rigid 800 Series, spin-glass fiberglass, 6.0 pcf density, with FSKL facing.

2.8.4 ~~Sealant~~ Adhesive for the insulation shall be in accordance with the written instructions of the insulation manufacturer. ADD-1

2.9 SUPPLY DIFFUSERS

2.9.1 Office/Restroom Area: Tuttle and Bailey Type DA, with modular panels for installation in suspended (office only) and opposed blade dampers, WI finish. See Drawing for sizes.

2.9.2 Packaging and Sampling Area: Tuttle and Bailey Type M, with opposed blade dampers, WI finish. See Drawing for sizes.

2.10 SUPPLY GRILLES: Tuttle and Bailey Series T55 with integral opposed blade dampers, WE finish. See Drawing for sizes.

2.11 RETURN AIR GRILLES: Tuttle and Bailey Series NT-CT, White No. 8-377 finish. See Drawing for sizes.

2.12 RETURN AIR REGISTERS: Tuttle and Bailey Series CR500 with opposed blade dampers, RL finish. See Drawing for sizes.

2.13 FIRE DAMPERS

2.13.1 Ruskin Model IBD23, Style A, UL listed, 3 hour rating, with 165 F fusible link. See Drawing for size and location.

2.13.2 Ruskin Model IBD2, Style A, UL listed, 1-1/2 hour rating, with 165 F fusible link. See Drawing for size and location.

PART 3 - EXECUTION

3.1 EQUIPMENT INSTALLATION

3.1.1 Install equipment where shown on the Drawings in accordance with the manufacturer's written instructions.

3.1.2 Install fire dampers in accordance with the Drawings and UL 555. Provide access panels adjacent to fire dampers, fusible link side, for inspection.

3.2 DUCT FABRICATION

3.2.1 Fabricate heating and cooling duct in accordance with SMACNA Low Pressure Duct Construction Standards.

3.2.2 Provide companion angle flanges at duct-to-equipment joints unless otherwise noted. Gasket material shall be neoprene.

3.2.3 Install turning vanes, meeting the requirements of Paragraph 2.7.2, in rectangular section square elbows.

3.2.4 Air Test Connections: Install permanent connections for pitot tube traverse and static pressure readings where necessary to perform the testing and balancing specified in SMACNA Testing, Balancing, and Adjusting Publication, Chapter 17. Pitot tube connections shall consist of a 1 inch drilled hole in the duct, capped with a 1 inch plugged coupling brazed in place. Where it is not possible to read static pressure with a pitot tube, static pressure connections shall be installed and shall consist of a 1/16 inch drilled hole in the duct, capped with a 1/8 inch plugged coupling brazed in place. Inner surface of duct shall be smooth and flush. Arrange the test connections as shown in SMACNA Testing, Balancing, and Adjusting Publication, Chapter 17.

3.2.5 Touch up damaged zinc with zinc-rich coating.

3.2.6 - Visual examination and acceptance criteria shall meet the requirements of AWS D9.1 SC-12

3.3 DUCT INSTALLATION

3.3.1 Attach hangers and supports rigidly to the primary structure of the building, equipment, and duct. Furnish and install secondary steel structures where required to support the duct or equipment. Installation of drop-in anchors shall be in accordance with the manufacturer's written instructions. (Cutting of embedded steel is unacceptable.) Hanger spacing shall be in accordance with SMACNA Low Pressure Duct Construction Standards.

3.4 DUCT CLEANING

3.4.1 Provide cleaning equipment, scaffolding, materials, and labor necessary to clean the ductwork.

3.4.2 Remove debris from the inside of the new duct and plenums. Then vacuum to remove small particles of foreign matter.

3.4.3 Duct removed for cleaning or damaged shall be replaced.

3.4.4 Install filters after debris has been removed.

3.5 DUCT INSULATION

3.5.1 Surfaces which are to receive insulation shall be clean, free of moisture, oil, dirt, scale, rust, and other foreign material.

3.5.2 Insulation and finish materials shall be thoroughly dry when applied.

3.5.3 Score or groove the insulation to fit the contours of the duct. Fill and seal scores, grooves, joints, and penetrations with insulating cement.

3.5.4 Install thermal insulation meeting the requirements of Article 2.8 on the exterior surfaces of interior duct.

3.5.5 Insulation shall be attached to metal surface with 100% coverage coat of insulation cement and held in place with adhered clips and washers. Fasteners shall be spaced not more than 12 inches on centers.

3.6 AUTOMATIC CONTROL SYSTEMS

3.6.1 Installation of Instruments and Wiring

3.6.1.1 Install instruments in accordance with the manufacturer's written instructions.

3.6.1.2 Install wiring in accordance with NFPA 70 (NEC).

3.6.1.3 Install low voltage wiring in conduit. Installation of the conduit is specified in Section 16400.

3.6.1.4 Instruments and controls located outside the building shall be provided with a weatherproof enclosure.

3.7 TESTING AND BALANCING HVAC SYSTEMS

3.7.1 General

3.7.1.1 After the system is completely installed and the duct has been cleaned, place exhaust and recirculating fans in operation in accordance with the manufacturer's written instructions. After the fans have been in operation for at least four hours, test and balance the heating, ventilating, and air conditioning systems in accordance with Chapter 17, SMACNA Testing, Balancing, and Adjusting Publication, and under the surveillance of the Government's Representative.

3.7.1.2 Furnish the instruments, materials, and labor required to perform the testing and balancing of the systems. Instruments shall have been calibrated by an approved testing laboratory with the date of calibration marked thereon.

3.7.1.3 Do not use instruments which are a part of the system for testing and balancing. Check the instruments of the system against the test instruments.

3.7.1.4 Check calibration of controls; recalibrate in accordance with the manufacturer's written instructions if required.

3.7.2 Data to be Recorded

3.7.2.1 After the test has been performed, submit the Test and Balance Data Report in accordance with Paragraph 1.1.3. Test data shall be tabulated and submitted with a flow sheet indicating the points of measurement. Include the characteristics of the systems that were observed during the tests. Include any failure of the system and control components to meet the operational functions required by the Drawings and this Specification.

Project No. B-526

Title Non-Radioactive Hazardous Chemical Waste Facility

**KAISER ENGINEERS HANFORD**

## VENDOR DATA LIST

("X" Indicates Required Data)

| 1 EPN Identification | 2 Description | 3 Reference Drawing | 4 Specification Paragraph | 5 Approval/Data: Dimensional Drawings | Equipment Weights | Specifications | Material Description | Performance Data | Circuit or Control Diagrams | Data Sheets | Illustrative Cuts | Installation Instructions | 6 Certified Vendor Information (CVI): Dimensional Drawings | Equipment Weights | Specifications | Certified Test Data | Circuit or Control Diagram | Instructions: Installation | Operation | Maintenance | Spare Parts List | 7 Remarks |
|---|---|---|---|---|---|---|---|---|---|---|---|---|---|---|---|---|---|---|---|---|---|---|
| 1 | Heat Pump | | 2.2 | | | | | | | | | | X | X | X | | | X | X | X | X | |
| 2 | Heat Recovery/ Evaporative Cooling Unit | | 2.3 | | | | | | | | | | X | X | X | | X | X | X | X | X | |

END OF SECTION

DOE Richland, WA

KEH-116 (3-82)

SECTION 16300

HIGH VOLTAGE DISTRIBUTION
(Above 600-Volt)

PART 1 - GENERAL

1.1 SUBMITTALS: Refer to Section 01300 for submittal procedures.

1.1.1 Approval Data: Submit the information listed in Column 5 of the Vendor Data List in this Section.

1.1.2 Certified Vendor Information (CVI): Submit the information specified in Column 6 of the Vendor Data List in this Section.

PART 2 - PRODUCTS

2.1 STANDARDS FOR MATERIALS

2.1.1 The listing of particular equipment or material in this Specification shall not be construed as being all of the materials and equipment required to complete the job and place it in satisfactory operating condition.

2.1.2 Materials and equipment shall be listed for the intended service by Underwriters Laboratories, Inc. (UL) in the Electrical Appliance and Utilization Equipment Directory or Electrical Construction Materials Directory or other qualified testing laboratory and shall bear the mark of the testing laboratory. In the absence of a mark, submit a certification of applicable listing. Listing and marking by UL or other qualified electrical testing laboratory is not required for material and equipment that is specified by the manufacturer's part number on the Contract Drawings or in this Specification.

2.2 TRANSFORMERS, OUTDOOR DISTRIBUTION: Outdoor distribution transformers shall be single-phase, pole mounted, and be of the kVa ratings and voltages shown on the Drawings. Transformers shall be manufactured and tested in compliance with ANSI C57.1200 and C57.1220, with a minimum impedance of 6.5 percent and a basic impulse level (BIL) of 95. Transformers shall have manufacturer's standard high-voltage taps and bushings that will accept compression-type terminals. Mounting brackets and hardware shall be supplied. Transformers shall be certified to be PCB free.

2.3 FUSED CUTOUTS: 15 kV, 100 amp rating, Westinghouse Type LVBB, ~~Joslyn Cat.~~ No. J9254-2J, with 15E fuses. DT #39

2.4 LIGHTNING ARRESTERS

2.4.1 Lightning arresters shall be the distribution valve type rated 15 kV, 95 BIL, for use on a 13.8 kV grounded-neutral system, and meet the requirements of IEEE Std 28. The porcelain bodies shall be wet porcelain, free of defects, and have a uniform color glaze. Galvanized cap and base

hardware shall have bolted clamps for both line and ground connections. Mounting bolts shall be galvanized.

2.5 AERIAL LINE CONDUCTORS: 13.8 kV aerial line conductors shall be bare, ACSR, hard drawn, EC grade aluminum wire with standard coated steel core, aluminum/steel - 6/1, size as shown on the Drawings.

2.6 SOLDERLESS CONNECTORS AND TERMINALS: Pressure type, solderless connectors, and terminal lugs shall be rated for use with copper or aluminum conductors and listed by UL.

ADD-1

2.7 POWER POLES: Power poles shall be ~~40~~ 45 feet in length, Class 2, and meet the requirements of ANSI O5.1 and be western red cedar cut from live timber. Poles shall be butt-treated in accordance with AWPA C7, using preservatives meeting the requirements of AWPA C7 and P1. Each pole shall be given a single top cut at an angle of 30 degrees with the normal to the axis of the pole and at right angles to the sweep. Gains shall be cut so the roof will be at right angles to the line and so that the sweep of the pole will be in line. Roofs and gains shall be brush-treated with preservatives meeting the requirements of the AWPA P1. Each gain shall fit the crossarm tightly. Bolt holes shall not be more than 1/16-inch oversize.

2.8 ARMOR RODS: Provide armor rods at each pin insulator support on tangent poles. The armor rods shall be ~~copperweld,~~ aluminum alloy, preformed type, made by Preformed Line Products Company. The rod diameter and length shall be in accordance with the written instructions of the aerial line conductor manufacturer.

2.9 TIE WIRES: Tie wires shall be No. 4 ~~soft drawn copper.~~ EC grade annealed aluminum. The length and installation method shall be in accordance with the written instructions of the line conductor manufacturer.

PART 3 - EXECUTION

3.1 GENERAL REQUIREMENTS

3.1.1 Interpretation of Drawings and Specification: The Drawings show the general layout of the complete electrical system including the arrangement of service equipment and conductors. Verify the scale dimensions on the Drawings since actual locations, distances, and levels shall be governed by actual field conditions. Perform all work in accordance with NFPA 70 (NEC) and ANSI C2.

3.1.2 Installation Instructions: Install all equipment and materials as shown on the Drawings and as specified. The term "equipment" is defined as all components of a wiring system including conductors, poles, crossarms, etc.

3.1.3 Use the appropriate special tools when installing devices for which special installation tools are recommended by the manufacturer.

3.2 HANDLING AND UNLOADING POLE LINE MATERIALS

3.2.1 Handle poles, conductors, fittings, insulators, and miscellaneous hardware with care at all times to prevent damage to the material. Unload pole line materials carefully from truck and do not drop.

3.2.2 Do not use construction hooks, tongs, or other sharp tools on the treated portion of poles. Do not drag poles.

3.2.3 If poles are to be stored for longer than two weeks, they shall be stacked carefully upon supports at least 1 foot above ground. Strength and spacing of supports and manner of stacking shall be such that no noticeable distortion will be produced in poles so stored.

3.2.4 Locate material stored at the construction site to prevent damage from weather and adjacent construction operations.

3.3 SETTING OF POLES

3.3.1 Excavate holes large enough to admit a tamping bar all around the pole at the butt. Do not use explosives to excavate pole holes.

3.3.2 Set pole 6'-0" deep. Use backfill materials which can be solidly compacted by hand tamping in 6 inch lifts. Compact surplus earth around the pole in a cone one foot high above grade. Add additional backfill where the backfill has settled, and tamp before completion of the work.

3.3.3 Set poles plumb and in line, except that the corners and other strain points which are guyed shall have butts displaced to keep tops in line where feasible. At such locations, the rake against the strain shall be approximately 3 inches for each 10 feet of height.

3.4 CROSSARM INSTALLATION

3.4.1 Mount crossarms at right angles to the axis of the poles. Bolts shall be of sufficient length for full thread engagement of the nut, but not protrude through poles or arms in excess of 2 inches. Bolt ends shall not be cut off. Use square washers with each thru-bolt and double-arming bolt to protect the pole and crossarms.

3.5 INSTALLATION OF GUYS AND ANCHORS

3.5.1 Install anchors to bear against undisturbed earth. Tamp backfill around anchors thoroughly, the entire depth of the hole.

3.5.2 Set anchor rods in earth in line with the strand and install with top of rod at least 6 inches above grade.

3.6 INSTALLING INSULATORS: Tighten pin insulators on the pin threads and adjust the top groove so that it is parallel with the line. Secure hold nuts with locknuts.

3.7 INSTALLING AERIAL CONDUCTORS

3.7.1 String conductors from rotating reels and do not drag along the ground nor permit conductors to lie where they may be run over by vehicles. Pull conductors through stringing sheaves or stringing blocks hung on messenger cable but do not pull around sharp corners. Inspect conductors as they leave the reels and cut out any weak or damaged sections and splice the ends. Do not make splices in adjacent spans, dead end spans, or within 4 feet of a support. Install conductors to the proper stringing tensions in accordance with the manufacturer's written instructions.

3.7.2 Do not use self-gripping or automatic tension splicing sleeves. Make taps between primary wires, jumpers, etc. with mechanical connectors.

3.7.3 Install hot line stirrups on all existing conductors where new feeder taps are made.

3.7.4 Sag conductors in accordance with ANSI C2 for medium loading districts and the manufacturer's written instructions.

3.8 AERIAL EQUIPMENT GROUNDING: Ground lightning arresters in accordance with the Drawings. Bond together any pole line hardware that is separated by less than 2 inches.

3.9 TESTING

3.9.1 Test electrical equipment and wiring installed under this Specification before any attempt is made to operate the equipment. Resistance, current, and voltage measurements may be made as work progresses. Maintain a systematic record by using a schedule or chart of all tests and measurements. Provide space to record readings, dates, and witnesses. Notify the Government's Representative before start of all required tests. Correct all items found, during testing or examination by the Government's Representative, to be at variance with the Drawings and this Specification. Deliver testing reports to the Government's Representative weekly as completed.

3.9.2 Furnish all instruments, labor, and equipment required to conduct the testing.

3.9.3 Use test instruments which bear a valid calibration stamp showing the date of calibration and expiration date of the stamp. The calibration and accuracy of test instruments shall be certified by an independent testing laboratory having laboratory standards traceable to the National Bureau of Standards.

3.9.4 In addition to the testing specified to be performed by the Contractor, the installation will be subject to examination by the Government's Representative for conformance with the design and all applicable codes. Assist the Government's Representative as requested.

Project No. B-526

Title: Non-Radioactive Hazardous Chemical Waste Facility

**KAISER ENGINEERS**
**HANFORD**

## VENDOR DATA LIST

("X" Indicates Required Data)

| 1 EPN Identification | 2 Description | 3 Reference Drawing | 4 Specification Paragraph | 5 Approval/Data: Dimensional Drawings | Equipment Weights | Specifications | Material Description | Performance Data | Circuit or Control Diagrams | Data Sheets | Illustrative Cuts | Installation Instructions | 6 Certified Vendor Information (CVI): Dimensional Drawings | Equipment Weights | Specifications | Certified Test Data | Circuit or Control Diagram | Instructions: Installation | Operation | Maintenance | Spare Parts List | 7 Remarks |
|---|---|---|---|---|---|---|---|---|---|---|---|---|---|---|---|---|---|---|---|---|---|---|
| 1 | Transformer | | 2.2 | | X | X | X | | | | | X | X | | X | | X | | | | | PCB Certification |

END OF SECTION

DOE Richland, WA

KEH-116 (3-82)

SECTION 16400

SERVICE AND DISTRIBUTION
(600-Volt and Below)

PART 1 - GENERAL

1.1 SUBMITTALS: Refer to Section 01300 for submittal procedures.

1.1.1 Approval Data: Submit the information listed in Column 5 of the Vendor Data List in this Section.

1.1.2 Certified Vendor Information (CVI): Submit the information specified in Column 6 of the Vendor Data List in this Section.

PART 2 - PRODUCTS

2.1 STANDARDS FOR MATERIALS

2.1.1 The listing of particular equipment or material in this Specification shall not be construed as being all of the materials and equipment required to complete the job and place it in satisfactory operating condition.

2.1.2 Materials and equipment shall be listed for the intended service by Underwriters Laboratories, Inc. (UL) in the Electrical Appliance and Utilization Equipment Directory or Electrical Construction Materials Directory or other qualified testing laboratory and shall bear the mark of the testing laboratory. In the absence of a mark, submit a certification of applicable listing. Listing and marking by UL or other qualified electrical testing laboratory is not required for material and equipment that is specified by the manufacturer's part number on the Contract Drawings or in this Specification.

2.1.3 Electrical equipment enclosures shall meet the requirements of NEMA ICS 6-110 and be Type 1 for indoor locations and Type 3R for outdoor locations.

2.2 METERING CABINET ASSEMBLY: The metering cabinet assembly shall consist of current transformers, potential transformers, a test switch, and a kilowatthour demand meter in a weatherproof enclosure per Sketch ES-526-FPD1, at the end of this Section.

2.3 PANELBOARDS

2.3.1 Panelboards shall be rated as shown on the Drawings and meet the requirements of FS W-P-115, Type I, Class 1.

2.3.2 Panelboard door locks shall be keyed alike with two keys provided for each panelboard.

2.3.3 Incoming feeders shall terminate with approved connectors defined in Paragraph 2.6. Provide multiple lugs for multiple feeder conductors.

2.3.4 Circuit breakers shall be the bolt-on type with thermal magnetic trips. The number and rating of circuit breakers shall be as shown on the Drawings. Circuit breakers marked "Spare" on the Panelboard Schedules shall be furnished in sizes designated. Circuit breaker positions marked "Space" shall be bussed for future breakers and provided with removable single-pole fillers.

2.3.5 Permanently number circuits. Plastic or steel buttons secured by means of rivets or grommets are acceptable. Circuit number tabs shall not be attached to, or be a part of, the circuit breaker.

2.3.6 Furnish panelboards with a printed directory containing the panelboard designation and power source. Each circuit function and location shall be typewritten on the directory.

2.3.7 Panelboard enclosures shall have a nameplate (see Paragraph 2.16), engraved with the panelboard designation shown on the Drawings. Fasten the nameplate to the outside of the panel door.

2.3.8 Furnish and install locking devices on circuit breaker handles as shown on the Panelboard Schedules.

2.4 TRANSFORMERS, GENERAL PURPOSE: General purpose transformers shall be dry type, 60 Hz, of the kVA rating shown on the Drawings. Transformers shall have two 2-1/2% taps above and two 2-1/2% taps below the normal rated primary voltage. The insulation system shall be rated 185 C with a 115 C winding temperature rise above ambient. Transformers shall be outdoor floor mounting and meet the requirements of NEMA ST 20. Provide an enclosure suitable for outdoor installation.

2.5 SAFETY SWITCHES: Safety switches shall meet the requirements of NEMA KS 1 and be heavy duty type HD, horsepower rated for 600 volt ac and be fusible. Fuses where required shall be the cartridge type, be single element, UL Class K5 and meet the requirements of ANSI C97.1.

2.6 SOLDERLESS CONNECTORS AND TERMINALS - 600 VOLTS AND LESS: Pressure type, solderless connectors and terminal lugs shall be rated for use with copper or aluminum conductors, and used in installations not exceeding 600 volts between conductors. Connectors with insulating caps or covers shall be rated for the system utilization voltage. Connectors shall be of types specified below:

2.6.1 For conductors #8 AWG and smaller:

2.6.1.1 Ideal Industries, Inc. - Wire-Nuts.

2.6.1.2 Thomas and Betts Company - Sta-Kon.

2.6.1.3 3M Company - Scotchlok.

2.6.2 For conductors #6 AWG and larger:

2.6.2.1 Burndy Engineering Company - Screw Pressure Connectors or Hypress.

2.6.2.2 Thomas and Betts Company - Lock-tite.

2.7 GROUNDING EQUIPMENT

2.7.1 Rebar Ground Grid: The ground grid shall consist of lengths of the foundation rebar, exothermically welded at each lap to form an electrically continuous loop around the building perimeter.

2.7.2 Grounding Electrodes: 5/8 inch stranded galvanized steel cables.

2.7.3 Grounding Plate: Erico Products Inc. Catalog No. S-330.

2.7.4 Exothermic Welds: Cadweld by Erico Products Inc. Type of Cadweld to match application.

2.8 LIGHTING FIXTURES

2.8.1 Lighting fixtures shall have all parts and fittings necessary to install the fixtures in accordance with the manufacturer's written instructions. Fixtures shall be wired from outlet to socket with #16 AWG minimum conductors having a temperature rating of 150 C minimum.

2.8.2 Fixtures of each type described in this Specification shall be of one manufacturer and of identical finish and appearance.

2.8.3 Fluorescent fixture ballasts shall be high power factor type and operate at 120 volts. Ballasts shall be suited for fixture temperature environment and be provided with an automatic resetting thermal protector. Ballasts shall meet the requirements of ANSI C82.1.

2.8.4 The lighting fixtures shall be as follows:

2.8.4.1 Type A: One-foot by four-foot, 2-lamp, rapid start, fluorescent fixture for flush mounting in suspended T-bar ceiling. Fixture shall have acrylic prismatic lens. Benjamin "Atlas" Catalog No. AGR-2224-4. Furnish with two F40CW lamps.

2.8.4.2 Type B: Four-foot, two-lamp, rapid start, surface-mounted, protected fluorescent fixture suitable for wet or corrosive locations. Housing constructed of ABS thermoplastic baked enamel steel with gasketed latching high-impact acrylic lens. Benjamin "Stream-Flo" Catalog No. FA-2424-4R. Furnish with two F40CW lamps.

2.8.4.3 Type C: Industrial fluorescent fixture; 8-foot, 2-lamp, rapid start, with porcelain enamel steel reflector Benjamin "Lite-Line" Catalog No. FL-1021-8U. Furnish with two cool white lamps.

2.8.4.4 Type F: Four-foot, two-lamp, rapid start, surface-mounted, fluorescent fixture with acrylic prismatic, wrap-around lens. Benjamin "Calumet" Catalog No. CD-2224-4. Furnish with two F40CW lamps.

2.8.4.5 Type G: 150-watt incandescent fixture with green globe and guard for pendant mounting, Crouse-Hinds Catalog No. VDA15GP with G55 globe and 60 watt "rough service" lamp.

2.8.4.6 Type H: 18 watt, low pressure, sodium fixture for exterior wall mounting. Bronze polycarbonate enclosure with clear gasketed lens. North American Philips Lighting Corporation Catalog No. LPS-18, 120 volt with photocell.

2.8.4.7 Type K: Same as Type H except 35 watt. Philips Catalog No. LPS-35.

2.8.4.8 Type L: 100 watt incandescent with recessed-mounted enclosure and round baked-white trim with Alba-Lite glass diffuser. Thomas Catalog No. R1 enclosure, R200-W trim and 100 watt R40 lamp.

2.8.4.9 Exit Lights: 120 volt unit with 8 inch high, 3/4 inch slash, green letters on white phosphorescent background to provide 1-1/2 hours of visibility after power failure. Fixtures shall be McPhilben, No. 40W-8K1GY suitable for surface wall mounting. Fixtures shall be provided with two 25-watt A19 incandescent lamps, single circuit.

2.8.4.10 Emergency Lights: Fully automatic, solid-state, with two sealed beam lamps, high-low rate charger and 6 volt sealed lead batteries, 120 volt ac. Cabinet shall be standard bronze hammertone. Provide a metal mounting bracket for wall mounting. ~~Dual-Lite Company No. AS-160BC~~ Chloride Technology Series TMFRE. DT #113

2.9 RECEPTACLES: Duplex receptacles shall be specification grade, rated 15 amp, 120 volt, 3 wire, grounding type, meeting the requirements of NEMA WD 1 Designation 5-15R and have screw terminals arranged for side wiring. Self-grounding receptacles may be used instead of the ground requirements specified. Receptacles located in office, corridor, and restrooms shall be ivory in color. All other receptacles shall be brown in color.

2.9.1 Explosionproof Receptacle: 20 amp, 125 volt, 3 pole, 2 wire receptacle suitable for Class 1, Division 1, Groups C, D. Crouse-Hinds Type CPS. Also furnish one Crouse-Hinds Type CPP plug with each Type CPS receptacle.

2.9.2 Clock Receptacle: 15 amp, 120 volt, 3 wire, recessed receptacle. Arrow-Hart Catalog No. 5707.

2.10 TOGGLE SWITCHES: Toggle switches shall be specification grade, rated 20 amps, 277 volts, with conventional handles and with screw terminals arranged for side wiring. Switches shall meet the requirements of FS W-S-896. Toggle switches located in office or restrooms shall be ivory in color. All other toggle switches shall be brown in color. Toggle switches shall be single-pole or three-way as indicated on the Drawing.

2.11 MANUAL MOTOR STARTING SWITCHES: Manual motor starting switches shall be 2-pole, toggle-operated, rated for a maximum of 10 hp at 480 volts, with handle lock-off and pilot light. Manual motor starting switches shall be Square D Co. Class 2510, Type KG-1A. Furnish nameplate as specified herein, engraved with legend as shown on the Drawings.

2.12 PLATES: Furnish and install plates for every wiring and control device. Finish shall be galvanized pressed steel for surface-mounted devices and ivory plastic for flush-mounted devices.

2.13 RACEWAYS, FITTINGS, AND BOXES

2.13.1 Conduit shall meet the requirements of the appropriate standard as follows:

| | | |
|---|---|---|
| 2.13.1.1 | Rigid Steel | ANSI C80.1 |
| 2.13.1.2 | Intermediate Metal | UL 1242 |
| 2.13.1.3 | Electrical Metallic Tubing (EMT) | UL 797 |
| 2.13.1.4 | PVC (Schedule 40) | FS W-C-1094, Type II |
| 2.13.1.5 | Flexible Metal | FS WW-C-566 |
| 2.13.1.6 | Rigid Aluminum and Fittings | FS WW-C-00540 |

2.13.2 PVC coating on rigid steel conduit shall be factory applied, and meet the requirements of NEMA RN 1, Type A-40.

2.13.3 Conduit fittings for rigid steel and EMT shall meet the requirements of NEMA FB 1. Only compression-type, threadless fittings shall be used with EMT.

2.13.4 Fittings used with flexible metal conduit shall meet the requirements of FS W-F-406 and be squeeze type only. Flexible metal conduit shall have an integral ground conductor.

2.13.5 Use "Myers" type watertight fittings or sealing lock nuts as manufactured by Midwest Electric Manufacturing Corp., for conduit entries into the sides or tops of NEMA Type 3 or NEMA Type 3R enclosures.

2.13.6 Interior lighting fixture outlet boxes shall be 4 inch octagonal pressed steel.

2.13.7 Exterior lighting fixture outlet boxes shall be cast with threaded hubs.

2.13.8 Telephone outlet boxes shall be 4 inches square x 2-1/8 inches deep with cover plate for single device.

## 2.14 CONDUCTORS

2.14.1 Conductors shall be copper and the type and AWG size specified or shown on the Drawings. Aluminum conductors may be substituted for copper in size #6 AWG and larger if conductors of equal or greater ampacity are used. The Contractor shall be responsible for verifying and increasing raceway sizes as required if this option is exercised.

2.14.2 Aerial Power Cable: Low voltage aerial power cable shall consist of three, 600 volt aluminum conductors with cross-link polyethylene insulation, spiraled around an ACSR messenger. Conductors shall be sized as shown on the Drawings.

2.14.3 Speaker Cable: Two-conductor, 16 gauge, stranded copper.

2.14.4 Conductors shall meet the requirements of Table E1.

TABLE E1
SINGLE CONDUCTORS

| Three-Phase Circuits | Single-Phase Circuits | COLOR Notes 1 & 2 | CODE TYPE | STRANDING |
|---|---|---|---|---|
| A Phase | Hot No. 2 | Red or Marked Red | THHN, XHHW | #10 AWG and smaller may be solid unless otherwise specified. #8 AWG and larger shall be stranded. |
| B Phase | -- | Yellow or Orange or Marked Yellow | | |
| C Phase | Hot No. 1 (Black only) | Blue or Black | | |
| Neutrals | | White or grey only. #6 & smaller - or marked white larger than #6 | THHN, XHHW | |
| Equipment grounding conductors | | Green | THHN, XHHW | All sizes shall be stranded. Bare annealed copper wire may be used in place of insulated wire in sizes #1 to #4/0 AWG. |

NOTES

1. Wire with green color insulation shall be used for equipment grounding conductor only, and it shall not be otherwise marked or used for any other purpose. Equipment grounding conductors shall be stranded (sizes 12 to 2 - 7 strands, sizes 1 to 4/0 - 19 strands).

2. Colored plastic tape may be used to mark wire. The tape marking band shall be a minimum of two inches in width. Wires shall be identified at each outlet and junction box.

2.15 CONTACTORS: Contactors for manually re-energizing lighting and receptacles in flammable storage room after loss of power shall be electrically held and suitable for ballast and resistance loads. Contactors shall be two-pole, 20 ampere rated, with NEMA 1 enclosure and 120 volt coils. "ON" and "OFF" pushbuttons shall be installed in the enclosure cover. Contactors shall be Square D Co., Class 8903, Type LG-20, Form A12.

2.16 NAMEPLATES: Nameplates shall be 1/16 inch thick, black satin finish, laminated plastic with white core and letters sized to meet legend requirements. Engraved manufacturer's standard nameplates may be used if of equal quality and legibility. Attach nameplates with screws or rivets only.

2.17 ANCHORS: Concrete anchors and masonry anchors shall be Hilti, drop-in, HDI, size 1/4 inch or 5/16 inch.

2.18 WIRE PULLING COMPOUND: Wire pulling compound shall be "Y-er Eas" as manufactured by Electro Compound Company or as specified by the cable manufacturer.

2.19 TAPE

2.19.1 Plastic insulating tape shall be Scotch No. 33+ as manufactured by 3M Company.

2.19.2 Conduit protection tape shall be Scotchrap No. 50 as manufactured by 3M Company.

2.20 INSULATING PUTTY: "Scotch-Fill" as manufactured by 3M Company; GE No. 8389 as manufactured by General Electric Co.; or "Airseal" as manufactured by the Kearney Company.

2.21 TELEPHONE BACKBOARD: 4' by 4' by 3/4" exterior-grade A-C plywood painted with one coat of primer and two coats of white semigloss enamel.

2.22 DUCT SEALING COMPOUND: Duct sealing compound shall be "Duct-seal" as manufactured by Porcelain Products Co. or "Kerite" as manufactured by the Kerite Co.

2.23 CONDUIT HANGERS: Conduit hangers for individual conduits shall be factory-made, springable wrought steel clamps or malleable iron, split and hinged rings. For suspended conduit, clamps or rings shall be bolted to, or interlocked with a threaded suspension rod.

2.24 SEALING COMPOUND: Sealing compound for conduit wall penetrations shall be polysulfide meeting the requirements of FS TT-S-00230, Type II, Class B.

2.25 CONDUIT SEALS: Crouse-Hinds, Type EYS complete with Crouse-Hinds Type X fiber and Type A sealing compound.

## 2.26 PUBLIC ADDRESS SYSTEM

2.26.1 The public address (PA) system shall be a complete functioning system of compatible components including the following:

2.26.1.1 PA amplifier: 60 watt, solid-state unit designed for desk mounting. Output shall contain less than 1 percent total harmonic distortion and be within 2 dB at a frequency range of 40 Hz to 15 kHz. The amplifier shall have two microphone inputs with volume controls, base, treble, and master volume controls. Amplifier shall be Rauland "Precedence" Model PR 1506.

2.26.1.2 Microphone: Dynamic, omnidirectional desk microphone with push-to-talk switch and 7 foot cable. Microphone shall be high impedance (40 kHz) and be Rauland Model 1295.

2.26.1.3 Corridor and restroom speakers: 8 inch cone speaker with 8 ohm, 10 watt peak voice coil. Speaker shall be Rauland Type 908-8 with T240, 25/70 volt line matching transformer and Type 4908-8 surface wall baffle.

2.26.1.4 Cell area and outdoor speakers: Wide-angle paging horn with 30 watt driver, selectable impedance and 25/70 volt line matching transformer. Horn shall be suitable for indoor or outdoor use and shall be Rauland Type 3703.

2.26.1.5 Speaker terminal box: 2-1/8" x 4" x 2" deep box with flush ivory plate and 2-pole shielded phono jack. Also provide preassembled jumper cable consisting of 5 feet of 2-conductor, 16 gauge, shielded copper cable, phono plug to match jack specified above and spade terminals to connect to amplifier.

## 2.27 EVACUATION ALARM SYSTEM

2.27.1 Siren: Motor driven, 120 volt, 110 decibels at 10 feet. Benjamin Catalog No. KM-8199-115.

2.27.2 Enclosure: NEMA 1 flush mounted enclosure with hinged cover. 12" x 12" x 4" deep. Provide nameplate engraved: "EVACUATION ALARM PANEL."

2.27.3 Wailing Timer: Solid-state, repeat cycle timer 120 volt, 10 amp normally open and normally closed contacts. Adjustable timing range 0.3-30 seconds. Square D Co., Class 9050, Type FSR-2.

2.27.4 Relay: 240 volt, 10 amp rated, general purpose DPDT relay Square D Co., Class 8501, Type C015 with 120 volt coil.

2.27.5 Selector Switch: Three-position, maintained-contact, Square D Co., Class 9001, Type KS-43BH2. Provide Type KN-399 legend plate engraved: "STEADY-OFF-WAIL."

PART 3 - EXECUTION

3.1 GENERAL REQUIREMENTS

3.1.1 Interpretation of Drawings and Specification: The Drawings show the general layout of the complete electrical system. Verify the scale dimensions on the Drawings since actual locations, distances, and levels shall be governed by actual field conditions. Perform all work in accordance with NFPA 70 (NEC).

3.1.2 Installation Instruction: - The term "equipment" is defined as all components of a wiring system. Fasten equipment securely to the structural members of the building, to metal supports attached to the structure, or to concrete surfaces. Fasten equipment to concrete or masonry with expansion anchors. Attachment to drywall shall be by screws into studs and to metal wall panels by weld studs, bolts, or self-tapping metal screws. Locate equipment, boxes, and conduit approximately where shown in relation to equipment served. Do not install conduit raceways and boxes in positions that interfere with the work of other trades. Identify safety switches and panelboards with designation or load served as shown on the Drawings. Attach the nameplates, previously specified, on the component.

3.2 INSTALLING GROUNDING SYSTEM

3.2.1 Rebar Ground Grid: Weld rebar loop per Paragraph 2.7.1. Install cable grounding electrodes where shown on the Drawings. Attach to rebar loop using exothermic welds.

3.2.2 Static Grounding: Ground the steel columns to grounding electrodes using exothermic welds.

3.2.3 Ground Plate: Install ground plate flush with floor slab directly below fire alarm panel. Attach ground plate to grounding electrode using exothermic weld.

3.2.4 Equipment Grounding Connections: Ground the equipment to the grounding electrodes using compression-type terminals.

3.2.5 System and Equipment Grounding: Solidly ground the neutral conductor of three-wire, single phase and four-wire, three phase, wye-connected distribution systems at the transformer neutral bushings only.

3.3 INSTALLING CONDUIT

3.3.1 General

3.3.1.1 Use rigid steel or intermediate metal conduit where subject to mechanical damage, where installed in concrete floors and walls, where installed exposed to the weather, or where installed 4 feet or less above

any floor. Electrical metallic tubing may be used elsewhere, when connecting electrical equipment 2 feet or less apart, and when entering the top of electrical equipment 4 feet minimum above the floor.

3.3.1.2 Install concealed conduits as directly as possible and with bend radii as long as possible. Install exposed conduit parallel with or at right angles to the building lines. Where conditions permit, maintain continuous exposed horizontal conduit runs along walls at a minimum height of 9 feet above floor level or grade.

3.3.1.3 Make elbows, offsets, and bends uniform and symmetrical. Bend conduit with approved bending devices. Install conduit without moisture traps wherever possible. Where practicable, provide drain holes in pull-boxes or fittings at low points in conduit systems and remove burrs from drilled holes. Use one-hole, conduit clamps equipped with clampbacks to secure conduits.

3.3.1.4 Use conduit hangers with 3/8 inch rods for 2 inch conduit and smaller and conduit hangers with 1/2 inch rods for 2-1/2 inch conduit and larger. If conduit is suspended on rods more than 2 feet long, brace conduit rigidly to prevent horizontal motion or swaying.

3.3.2 Hazardous Locations

3.3.2.1 Perform all electrical work in hazardous locations as indicated on the Drawings, in accordance with NEC Article 501.

3.3.2.2 Where possible avoid installing couplings, boxes, and fittings within the hazardous area and within 12 inches beyond the boundary defined on the Drawings.

3.3.2.3 Conduit seals where required shall be installed in accordance with Paragraphs 501-5(a) and (c) of the NEC.

3.3.3 Conduit Below Floor or Below Grade

3.3.3.1 For conduit installed below the grade or below the floor slab, encase conduit in concrete a minimum of 3 inches on all sides or use PVC-coated, rigid, galvanized steel. Install PVC-coated conduit in accordance with the conduit manufacturer's written instructions. Repair all PVC coating, damaged during handling or installation, using PVC paint according to the conduit manufacturer's written instructions.

3.3.3.2 Set up joints in all conduit installed in concrete, underground or exposed to weather, with a high temperature, antiseize, conductive thread lubricant and sealing compound.

3.3.3.3 Install exposed conduit stubbing up through the floor slab so that it is straight and plumb. Install conduit at sufficient depth below slab to eliminate any part of the bend above top of slab. Wrap all conduit stub-ups with conduit protection tape from a point 2 inches below top of slab to

approximately 6 inches above slab. Remove tape down to top of slab after slab has cured. Verify all conduit stub-up locations with final equipment arrangements.

3.3.4 Attachment to Equipment

3.3.4.1 Use galvanized steel lock nuts and bushings for attachment to enclosures except threaded hubs may be used where permitted by the NEC. Threadless fittings will not be permitted for rigid conduit. Use Erickson-type couplings where required. Do not use running threads.

3.3.4.2 Cut conduit square, ream and remove burrs. Conduit shall be clean, dry, and free of debris. Immediately after installation, plug or cap all exposed conduit ends with standard conduit accessories until wires are pulled.

3.3.4.3 Use flexible conduit to make connections to motors and other equipment subject to vibration. Use liquid-tight, flexible metal conduit where the conduit and fittings are to be installed outdoors or where exposed to moisture or chemical fumes indoors. Flexible conduit may be used in lengths not exceeding 4 feet for other equipment, with approval of the Government's Representative.

3.3.5 Exterior Wall Penetrations

3.3.5.1 Seal opening around conduit at exterior wall penetrations and at penetrations of walls which form boundaries between adjoining ventilation zones, using the sealing compound described herein. Make the seal waterproof and finish the sealing compound flush with the surrounding wall surface.

3.3.5.2 Seal interior of conduits by applying duct sealing compound in the conduit at the box or enclosure nearest the penetration on both sides of the wall.

3.3.6 Seal and protect conduit stubs installed for future extensions with pipe caps. Double wrap the closed end with insulating tape for the last 6 inches.

3.3.7 Install a #14 gauge galvanized iron pull wire or a 1/8 inch polyethylene rope in conduit installed and left empty for future use and all telephone conduits.

3.4 INSTALLING BOXES, ENCLOSURES, AND WIRING DEVICES

3.4.1 Install boxes firmly secured in position and plumb.

3.4.2 Install an extension ring with blank cover on all flush-mounted junction boxes where the junction box serves permanently installed equipment.

3.4.3 Flush mount junction boxes served by concealed conduit unless otherwise noted.

3.4.4 Install dust covers on boxes until wires are pulled and permanent covers or devices are installed.

3.5 INSTALLING CONDUCTORS

3.5.1 Paint or pressure-sensitive colored tape may be used for color coding conductors instead of colored insulation on #8 AWG and larger wire only. Maintain phase color coding for all branch and feeder circuits up to and including equipment connections.

3.5.2 Use lubricant recommended by the cable manufacturer's written instructions, or the wire pulling compound specified, to decrease friction when pulling wire and cable through conduit. Do not exceed maximum pulling tension according to the cable manufacturer's written instructions.

3.5.3 Do not install or handle wires with thermoplastic insulation or jacket when the ambient temperature is 15 F or below.

3.6 SPLICES, TAPS, AND CABLE TERMINATIONS

3.6.1 Make splices and taps in building wire with solderless connectors described in Paragraph 2.6. Use solderless connectors in accordance with the manufacturer's written instructions.

3.6.2 Use plastic insulating tape for all uninsulated splices and taps on circuits up to 600 volts. Apply the insulating tape to a thickness at least equal to that of conductor insulation. Where a bolted splice or connection presents an irregular surface, apply insulating putty to the joints before taping.

3.6.3 Use crimp-on type spade lugs for wire terminations of stranded conductors to binder screw or stud type terminals. Spade lugs shall have upset legs and insulation sleeves sized for the conductors.

3.7 INSTALLING LIGHTING FIXTURES

3.7.1 Mount suspended lighting fixtures securely on rods attached to building structural members or to framing channels attached to structural members. Use a fixture stud if the lighting fixture is hung from the outlet box.

3.7.2 Fixtures installed in, or surface-mounted below, the suspended "tee" ceiling shall be supported by hanger wires fastened to the building structure. Provide and install the hanger wires necessary to meet this requirement. Support 4 foot fixtures at each end with #9 gauge (minimum) galvanized hanger wires.

3.8 INSTALLING MOTOR - OPERATED EQUIPMENT: Wire motor-operated equipment in accordance with the Drawings, this Specification, and the manufacturer's written instructions. Install wiring to devices which do not appear on the Construction Drawings but which are included in the installation shown on the Manufacturer's Drawings.

## 3.9 TESTING

### 3.9.1 General

3.9.1.1 Test electrical equipment and wiring installed under this Specification before any attempt is made to operate the equipment. Resistance, current, and voltage measurements may be made as work progresses. Maintain a systematic record by using a schedule or chart of all tests and measurements. Provide space to record readings, dates, and witnesses. Notify the Government's Representative before the start of all required tests. Correct all items found, during testing or examination by the Government's Representative, to be at variance with the Drawings and this Specification. Deliver testing reports to the Government's Representative weekly as completed.

3.9.1.2 Furnish all instruments, labor, and equipment required to conduct testing.

3.9.1.3 Use test instruments which bear a valid calibration stamp showing the date of calibration and expiration date of the stamp. The calibration and accuracy of test instruments shall be certified by an independent testing laboratory having laboratory standards traceable to the National Bureau of Standards.

3.9.1.4 In addition to the testing specified to be performed by the Contractor, the installation will be subject to examination by the Government's Representative for conformance with the design and all applicable codes. Assist the Government's Representative as requested.

### 3.9.2 Motors

3.9.2.1 Check motors for correct rotation.

3.9.2.2 Measure and record voltage, current, and speed under normal operating loads.

### 3.9.3 Wiring Systems

3.9.3.1 Test all power conductors that are rated at 600 volts and are used for services, feeders, or branch circuits over 150 volts to ground phase-to-ground with a megger. The minimum acceptable value of insulation resistance shall be 200 megohms. The megger manufacturer's instruction pamphlet, furnished with the megger, shall provide instructions for conducting the tests. Temporarily disconnect all devices not capable of withstanding the voltage or current of the megger test (such as indicating instruments, relays, and lamps) before the test is made. The dc voltage output of the megger shall be 1000 (nominal).

3.9.3.2 The Contractor may elect to group and connect together all conductors within a raceway while performing the megger test. Record all readings which indicate less than the minimum acceptable value. Repeat megger test after replacement of defective wiring.

4209K/0240K

Project No. B-526

Title Non-Radioactive Hazardous Chemical Waste Facility

**KAISER ENGINEERS HANFORD**

## VENDOR DATA LIST

("X" Indicates Required Data)

| 1 EPN Identification | 2 Description | 3 Reference Drawing | 4 Specification Paragraph | 5 Approval/Data: Dimensional Drawings | Equipment Weights | Specifications | Material Description | Performance Data | Circuit or Control Diagrams | Data Sheets | Illustrative Cuts | Installation Instructions | 6 Certified Vendor Information (CVI): Dimensional Drawings | Equipment Weights | Specifications | Certified Test Data | Circuit or Control Diagram | Instructions: Installation | Operation | Maintenance | Spare Parts List | 7 Remarks |
|---|---|---|---|---|---|---|---|---|---|---|---|---|---|---|---|---|---|---|---|---|---|---|
| 1 | Metering Cabinet Assembly | | 2.2 | X | | | X | | X | | | | | | X | | | | | | | |
| 2 | Panelboards | | 2.3 | | | X | X | | | | | | | | X | | | | | | | |
| 3 | Transformer | | 2.4 | | | X | X | | | | | | | | X | | | | | | | |
| 4 | Safety Switches | | 2.5 | | | X | X | | | | | | | | | | | | | | | |

16400 - 14

B-526-C1

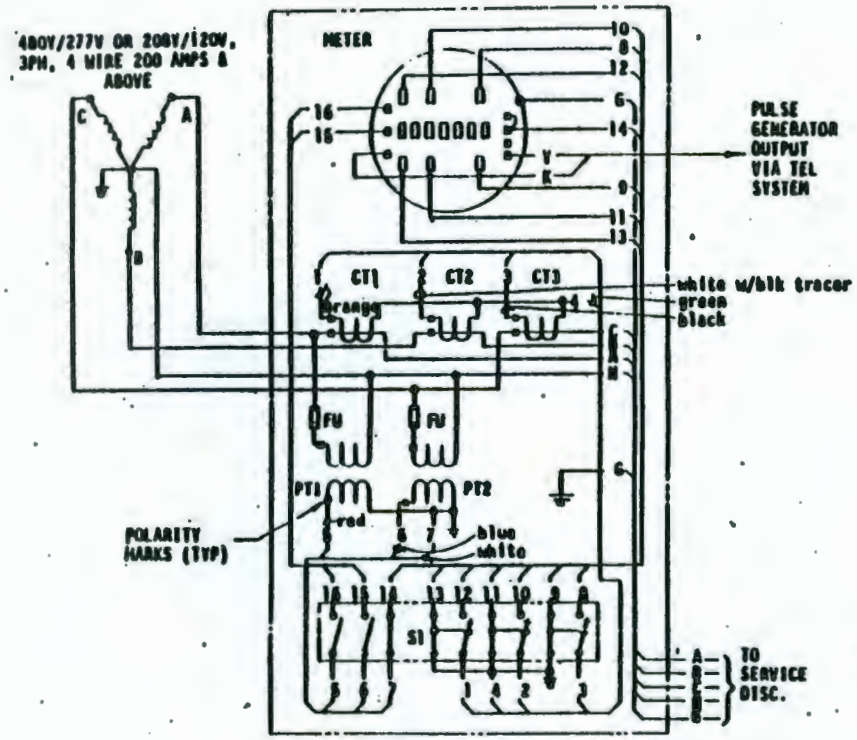


WIRING DIAGRAM

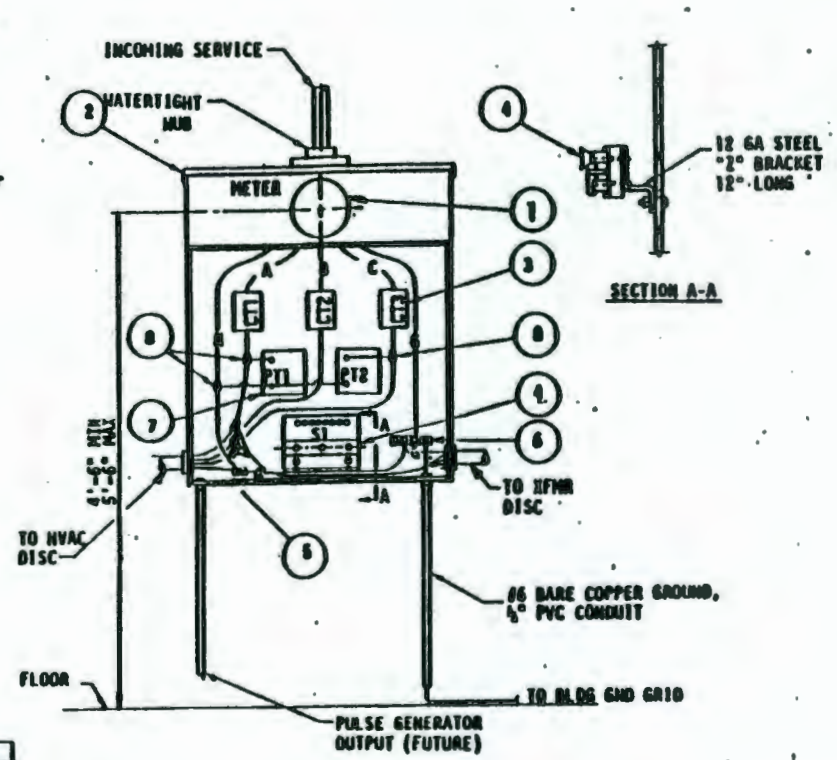


ELEVATION

MATERIAL LIST

| QTY | PART NO. | DESCRIPTION | REFERENCE* |
|---|---|---|---|
| 1 | 1 | METER, WATTHOUR, DEMAND TYPE, 2 STATOR, CLASS 10, 120VAC, FOR USE WITH 3 CTS AND 2-288/120V PTS, 480Y/277V 3PH, 4 WIRE SERVICE, COMPLETE WITH PULSE GENERATOR, R/P = 625/864, KWH/PULSE = 0.25 AND REGISTER TYPE M-30 WITH 30 MINUTE DEMAND INTERVAL, PRIMARY RATED. | GE VMM-66-S WITH D-52 PULSE GEN** |
| 1 | 2 | COMBINATION METER AND CURRENT TRANSFORMER CABINET, 400A MAX, 3PH, 4 WIRE WYE, NEMA TYPE 3R, WITH AUTOMATIC CIRCUIT CLOSING DEVICES | CIRCLE AW 122013 OR EQUIVALENT |
| 3 | 3 | CURRENT TRANSFORMER | GE JCW-0**(400A) |
| | 4 | TEST SWITCH, 9 POLES | SUPERIOR 1041-F |
| 1 | 5 | BUSHING, INSULATED GROUNDING TYPE | OZ/GEDNEY CO. TYPE BLG |
| 1 | 6 | GROUNDING LUG, TYPE 02B | BURNDY CORP. |
| 2 | 7 | POTENTIAL (VOLTAGE) TRANSFORMER, 288/120V, WITH TWO (2) PRIMARY FUSES | GE JVP-1** |
| 3 | 8 | SPLIT BOLT CONNECTORS & TAPE FOR 600V | |

**MAY BE THE EQUIVALENT PRODUCT OF DUNCAN, SANGAMO, OR WESTINGHOUSE

NOTES

1. POTENTIAL TRANSFORMER WIRING AND CURRENT TRANSFORMER SECONDARY WIRING SHALL BE NO. 12 AWG STRANDED COPPER, TYPE XHHW WITH 600 V INSULATION.

END OF SECTION
ES-526-FPD1

SECTION 16720

ALARM AND DETECTION SYSTEMS

PART 1 - GENERAL

1.1 SUBMITTALS: Refer to Section 01300 for submittal procedures.

1.1.1 Approval Data: Submit the information listed in Column 5 of the Vendor Data List in this Section.

1.1.2 Certified Vendor Information (CVI): Submit the information specified in Column 6 of the Vendor Data List in this Section.

PART 2 - PRODUCTS

2.1 STANDARDS FOR MATERIALS

2.1.1 The listing of particular equipment or material in this Specification shall not be construed as being all of the materials and equipment required to complete the job and place it in satisfactory operating condition.

2.1.2 Materials and equipment shall be listed for the intended service by Underwriters Laboratories, Inc. (UL) in the Electrical Appliance and Utilization Equipment Directory or Electrical Construction Materials Directory or other qualified testing laboratory and shall bear the mark of the testing laboratory. In the absence of a mark, submit a certification of applicable listing. Listing and marking by UL or other qualified electrical testing laboratory is not required for material and equipment that is specified by manufacturer's part number on the Contract Drawings or in this Specification.

2.1.3 Use fire alarm equipment listed in the UL Fire Protection Equipment Directory or the FM Approval Guide bearing the mark of the listing organization.

2.1.4 The fire alarm system design, components, and installation shall meet the requirements of NFPA 70, 72B, and 1221.

2.2 FIRE ALARM CONTROL PANEL

2.2.1 Furnish a panel of NEMA 1 construction designed for surface mounting, with a key lockable hinged door. Panel door shall have a cylinder lock with key matched to Corbin Cat. 60 and be finished outside in "Signal Red," FED STD 595, Color 11105.

2.2.2 Provide four fire detection zones, minimum, each with end-of-line supervision to detect all open circuits or unintentional grounds, in accordance with NFPA 72B.

2.2.3 Label all indicating lights and switches with their function. Identify each zone with laminated plastic nameplates approximately 5/8 inch by 2 inches and engraved with the zone number and function. Unused zones shall be engraved "SPARE". Engrave laminated plastic nameplates with 1/8 inch high characters. Manufacturer's standard nameplates are acceptable if of equal quality and legibility.

2.2.4 Supply the following equipment mounted on or in the fire alarm control panel:

2.2.4.1 Indicating lights (LEDS):

a. AC Power On (green)
b. AC Power Off (amber)
c. System Common Alarm (red)
d. System Common Trouble (amber)
e. City Disconnect (amber)
f. System Ground Fault (amber)
g. Battery Trouble (amber)
h. Battery High Rate (amber)
i. Zone Alarm for each zone (red)
j. Zone Trouble for each zone (amber)
k. Bell Supv. (amber)

2.2.4.2 Switches

a. Drill - To sound all audible alarm devices. Operation shall not transmit signal to the fire station unless an alarm occurs during the drill.

b. Alarm Off - To silence all audible alarm devices. Operation shall energize trouble circuit.

c. Trouble Off - To silence system trouble tone, with resound capability in the event a subsequent trouble condition occurs.

d. Reset - Ringback shall occur if operated when any other switch is not in normal position.

e. City Off - Operation shall energize trouble circuit.

f. Lamp Test - Operation shall energize trouble circuit.

2.2.4.3 Trouble alarm buzzer (tone alert).

2.2.4.4 Gong ringing circuit. The gong ringing circuit shall pulse the alarm gongs at a rate of 2 strokes per second.

2.2.4.5 Terminal blocks for wiring.

2.2.4.6 Automatic power transfer switch. Failure of the primary power supply shall cause automatic transfer to secondary supply. Return to

primary power shall occur automatically upon restoration of primary power supply. Transfer from primary to secondary power shall cause an audible trouble signal to be initiated and the supervisory code transmitter shall be actuated. No false alarms or interruption of fire alarm service shall occur due to loss or restoration of primary power.

2.2.4.7 Secondary power supply. Primary power will be from the facility power panel in accordance with the Drawings. Secondary power supply shall be a rechargeable battery in accordance with NFPA 72B to operate the fire alarm system and trouble signals in the event of failure of the primary power. Battery shall be heavy duty, sealed, maintenance-free type designed for fire alarm usage. The battery assembly shall be sized to operate the system for a minimum of 60 hours after loss of charging current at an ambient temperature of +40 F, and be capable of transmitting a fire alarm signal for not less than 5 minutes at the end of this period. Calculations similar to Appendix A shall be made to verify the size of the batteries required.

2.2.4.8 Battery charger. The battery charger shall be a compatible, automatic, solid state, constant voltage device with ac voltage compensation, dc voltage regulation and current limiting. The battery charger shall provide continuous taper charging, have a manual high rate switch to provide equalizing charge, and be capable of charging batteries from 75% of full charge to 100% of full charge in not more than 24 hours. The battery charger shall have a dc ammeter, a voltmeter, and an undervoltage relay with normally closed contacts that open when battery voltage drops to 75% of its rated normal voltage, and be enclosed in the fire alarm control panel.

2.2.4.9 Zone Modules. Each zone module shall have an alarm operated output.

2.2.5 Alarm signals shall latch and require manual reset devices.

2.2.6 Control Panel Operation:

2.2.6.1 On incoming fire alarm signal the fire alarm control panel shall:

a. Transmit the coded alarm signal.

b. Light the system common alarm indicating lamp.

c. Light the incoming signal zone alarm indicating lamp.

d. Operate the building alarm gongs.

2.2.6.2 On incoming trouble (supervisory) signal the fire alarm control panel shall:

a. Transmit the coded trouble signal.

b. Light the system common trouble indicating lamp.

c. Light the incoming signal zone trouble indicating lamp.

d. Sound an audible alarm at the panel.

2.2.6.3 A fire alarm signal shall be initiated by:

a. Operating any manual pull box in system.

b. Operation of the flow alarm pressure switch.

2.2.6.4 A trouble signal shall be initiated by:

a. Disconnecting any device or wire in the system.

b. Loss of primary (ac) circuit.

c. Loss of, or low secondary (battery) voltage.

d. Any open circuit.

e. Any ground short not part of system design.

f. Silencing alarm gong system.

g. Operation of the post indicator valve tamper switch.

2.3 FIRE ALARM MUNICIPAL TRANSMITTER: The municipal transmitter shall meet the requirements of NFPA 1221 and be mounted in the fire alarm control panel. The transmitter shall be the positive noninterfering, local energy, successive type, capable of transmitting four rounds of Code Number 1614 to the fire station.

OPTIONAL FIRE ALARM MASTER BOX: The Contractor may elect to provide a separately mounted master box for transmitting fire alarm signals. If this option is chosen, the master box shall conform to the above requirements and be manually wound. The master box enclosure shall be "Signal Red," suitable for outdoor surface mounting and be the non-break, glass type. The master box shall be Gamewell Model No. M34-56. Vendor submittals shall show required conduit and conductor changes to the Drawings if this option is used.

2.4 SUPERVISORY CODE TRANSMITTER: The supervisory code transmitter shall be mounted in the fire alarm control panel. It shall be of the positive, noninterfering, local energy, successive type. The transmitter shall be capable of transmitting one round of the code number 71614 to the fire station. The transmitter shall be fully compatible with the existing area loop.

OPTIONAL SUPERVISORY CODE TRANSMITTER: The Contractor may elect to provide a separately mounted supervisory code transmitter. If this option is chosen, the transmitter shall conform to the above requirements and be manually wound. The enclosure shall be lockable, shall be finished in royal blue, and be suitable for outdoor surface mounting. The

transmitter shall be Gamewell Model No. M34-72. Vendor submittals shall show required conduit and conductor changes to the Drawings if this option is used.

2.5 MANUAL FIRE ALARM STATIONS: Manual fire alarm stations shall be noncoded, nonself-restoring type with double-pole, double-throw positive action contacts. The fire alarm manual stations shall meet the requirements of UL 38, be for indoor surface mounting, and be finished "Signal Red."

2.6 END-OF-LINE DEVICE: The end-of-line resistor, capacitor, or diode shall be sized and provided by the fire alarm equipment supplier.

2.7 FIRE ALARM GONG: The fire alarm gong shall be a single-stroke, 6 inch diameter bell with universal mounting plate. The fire alarm gong shall operate on 24 volt dc and be finished "Signal Red."

2.8 SOLDERLESS CONNECTORS AND TERMINALS--600 VOLTS AND LESS: Refer to Section 16400, Paragraph 2.6.

2.9 RACEWAYS AND FITTINGS: Refer to Section 16400, Article 2.13.

2.10 CONDUCTORS

2.10.1 General

2.10.1.1 Conductors shall be No. 14 AWG, minimum, stranded copper type THHN or XHHW and be of the AWG size shown on the Drawings.

2.10.1.2 Conductors shall be readily identified by a continuous permanent marking on the insulation to indicate the type, voltage, gauge, and manufacturer.

2.10.2 Aerial Fire Alarm Cable: Aerial cable shall be two-conductor, No. 14 AWG, self-supporting, 30 percent conductivity copper-covered steel with single extrusion high-density polyethylene insulation and red color PVC jacket. Triangle/PWC No. KN644253.

2.11 LAMINATED PLASTIC NAMEPLATES: Nameplates shall be 1/16 inch thick, black satin finish with white core. Front four edges shall have a 1/32 inch by 45 degree bevel.

2.12 WIRE PULLING COMPOUND: Wire pulling compound shall be "Y-er Eas" manufactured by Electro Compound Company or as specified by the cable manufacturer.

PART 3 - EXECUTION

3.1 GENERAL REQUIREMENTS

3.1.1 Interpretation of Drawings and Specification: The Drawings show the general layout of the complete fire alarm system including the arrangement of circuits, control panels, manual stations, alarms, and other equipment. Verify the scale dimensions on the Drawings since actual locations,

distances, and levels shall be governed by actual field conditions. Perform all work in accordance with NFPA 70, 72B, and 1221.

3.1.2 Installation Instruction: The term "equipment" is defined as all components of a wiring system including conduit, raceways, control panels, cabinets, outlet boxes, lighting fixtures, etc. Fasten equipment securely to the structural members of the building, to metal supports attached to the structure, or to concrete surfaces. Use clamping devices for attaching to structural steel, or, when clamping is impracticable, obtain written authority from the Government's Representative to weld to, drill, or cut structural members to provide attachment. Fasten equipment to concrete or masonry with expansion anchors. Attachment to drywall shall be by screws into studs and to metal wall panels by weld studs, bolts, or self-tapping metal screws. Locate equipment, boxes, and conduit approximately where shown in relation to equipment served. Do not install conduit raceways and boxes in positions that interfere with the work of other trades.

3.1.3 Use the appropriate special tools when installing devices for which special installation tools are recommended by the manufacturer.

3.2 INSTALLING CONDUIT: Refer to Section 16400, Article 3.3.

3.3 INSTALLING CONDUCTORS

3.3.1 Do not bend cables installed in wireways to less than the cable manufacturer's recommended minimum bending radius.

3.3.2 Use the following color code for fire alarm system conductors:

| Circuit | Color of Wire Insulation |
|---|---|
| Area Fire Alarm Loop--from Fire Station or from Area Fire Alarm Control Cabinet to the Fire Alarm Control Panel | Red |
| Alarm Initiating Devices--detectors, manual stations, etc. | Red |
| Supervisory Devices--limit switches, pressure supervisory switches, etc. | Yellow |
| Other Wiring | Different from preceding colors but not Green, Orange, Blue, or Brown |
| AC Power | Black and White |

3.3.3 Use lubricant recommended by the cable manufacturer's written instructions, or the wire pulling compound specified, to decrease friction when pulling wire and cable through conduit.

3.3.4 Do not install or handle wires with thermoplastic insulation or jacket when the ambient temperature is 15 F or below.

3.4 INSTALLING DEVICES

3.4.1 Wiring and equipment within the fire alarm control panel shall be arranged so that individual sub-panels or components are readily accessible for adjustment or maintenance without disconnecting conductors.

3.4.2 If a separately mounted fire alarm master box and supervisory code transmitter are chosen in lieu of modules in the fire alarm control panel, the units shall be located as close as possible to the control panel on the exterior of the building. The Contractor shall modify conduit and conductor routings to comply with this option.

3.5 SPLICES, TAPS, AND CABLE TERMINATIONS: Refer to Section 16400 for cable terminations. Splices in fire alarm wiring are not acceptable.

3.6 TESTING

3.6.1 General

3.6.1.1 Test electrical equipment and wiring installed under this Specification before any attempt is made to operate the equipment. Resistance, current, and voltage measurements may be made as work progresses. Maintain a systematic record by using a schedule or chart of all tests and measurements. Provide space to record readings, dates, and witnesses. Notify the Government's Representative before the start of all required tests. Correct all items found, during testing or examination by the Government's Representative, to be at variance with the Drawings and this Specification. Deliver testing reports to the Government's Representative weekly as completed.

3.6.1.2 Furnish all instruments, labor, and equipment required to conduct testing.

3.6.1.3 Use test instruments which bear a valid calibration stamp showing the date of calibration and expiration date of the stamp. The calibration and accuracy of test instruments shall be certified by an independent testing laboratory having laboratory standards traceable to the National Bureau of Standards.

3.6.1.4 In addition to the testing specified to be performed by the Contractor, the installation will be subject to examination by the Government's Representative for conformance with the design and all applicable codes. Assist the Government's Representative as requested.

3.6.2 Wiring Systems

3.6.2.1 Test all fire alarm circuits for continuity.

3.7 The operability of the fire alarm system shall be verified by ATP No. 4536. This ATP is provided with the design package.

4212K/024OK

Project No. B-526

Title: Non-Radioactive Hazardous Chemical Waste Facility

**KAISER ENGINEERS HANFORD**

## VENDOR DATA LIST

("X" Indicates Required Data)

| 1 | 2 | 3 | 4 | 5 Approval/Data | | | | | | | | | 6 Certified Vendor Information (CVI) | | | | | | | | | 7 |
|---|---|---|---|---|---|---|---|---|---|---|---|---|---|---|---|---|---|---|---|---|---|---|
| | | | | | | | | | | | | | | | | | | Instructions | | | | |
| EPN Identification | Description | Reference Drawing | Specification Paragraph | Dimensional Drawings | Equipment Weights | Specifications | Material Description | Performance Data | Circuit or Control Diagrams | Data Sheets | Illustrative Cuts | Installation Instructions | Dimensional Drawings | Equipment Weights | Specifications | Certified Test Data | Circuit or Control Diagram | Installation | Operation | Maintenance | Spare Parts List | Remarks |
| 1 | Fire Alarm Control Panel including all modules | | 2.2 | | | X | | X | X | X | X | | | | X | | X | | X | X | | |
| 2 | Battery | | 2.2.4.7 | | | X | | X | | | | | | | X | | | | X | X | | |
| 3 | Battery calculations | | 2.2.4.7 | | | | | X | | | | | | | | | | | | | | |
| 4 | Fire alarm gong | | 2.7 | | | X | | X | | | X | | | | | | | | | | | |
| 5 | Manual station | | 2.5 | | | X | | | | | X | | | | | | | | | | | |

END OF SECTION 16720 - 9

B-526-01

## APPENDIX A

## SAMPLE BATTERY CALCULATION

ALARM MANUFACTURER: Fireco

ALARM PANEL TYPE: Model FACP-7

REFERENCE DRAWINGS: M123 Control Panel Wiring Diagram
M374 Zone Alarm Module
M339 Alarm Trouble Module, etc

### CURRENT DEMAND

| SYSTEM COMPONENTS | NORMAL SUPERVISORY | ALARM CONDITION |
|---|---|---|
| Zone Alarm Module | 0.005A | 0.065A |
| Trouble Module | 0.003A | 0.020A or 0.0 |
| Fire Alarm Module | 0.005A | 0.050A |
| Ionization Detectors | 0.003A | 0.035A |
| Ultraviolet Detectors | 0.005A | 0.045A |
| Indicator Lamp | - | 0.030A |
| Auxiliary Relay Coil | - | 0.025A |
| Masterbox Coil | - | 0.045A |

### NORMAL SYSTEM DEMAND

| SYSTEM COMPONENTS | |
|---|---|
| (6) Zone Alarm Modules | 0.030 |
| (1) Trouble Module | 0.003 |
| (1) Fire Alarm Module | 0.005 |
| (3) Ionization Detectors | 0.009 |
| (1) Ultraviolet Detector | 0.005 |
| | 0.052A @ 60 hr = 3.120AH |

### FIRE ALARM DEMAND

| SYSTEM COMPONENTS | |
|---|---|
| (5)Zone Module (Supervisory) | 0.025 |
| (1)Zone Module (Alarm) | 0.065 |
| Fire Alarm Module | 0.050 |
| (2)Ionization Detectors | 0.070 |
| Indicator Lamp | 0.030 |
| Aux Relay Coil | 0.025 |
| Masterbox Coil | 0.045 |
| | 0.310A @ 1 hr = 0.310AH |

CONTINGENCY - 20% of normal Supr Demand 3.12 AH 0.624AH

TOTAL TIME ADJUSTED CURRENT DRAW: 4.054AH

END OF APPENDIX A

# APPENDIX 4B

# DESIGN DRAWINGS

This page intentionally left blank.

# APPENDIX 4B

## DESIGN DRAWINGS

This appendix contains the following design drawings:

| | | |
|---|---|---|
| H-6-1552 | CIVIL/DWG LIST SITE PLAN, SECTIONS & DETAILS<br>ECN 626113 (12/08/95) | Rev. 4 |
| H-6-1553 | ARCHITECTURAL PLAN, ELEVATIONS & SECTIONS<br>ECN 626021 (10/10/95)<br>ECN 626113 (12/08/95) | Rev. 4 |
| H-6-1554 | ARCHITECTURAL PLAN, ELEVATIONS AND DETAILS<br>(sheet 1 of 2)<br>ECN 626021 (10/10/95) | Rev. 4 |
| H-6-1554 | ARCHITECTURAL PLAN, ELEVATIONS AND DETAILS<br>(sheet 2 of 2)<br>ECN 626021 (10/10/95) | Rev. 0 |
| H-6-1555 | ARCH PLAN, SCHED, DETAILS & SECTIONS | Rev. 3 |
| H-6-1556 | STRUCTURAL PLAN & SECTIONS<br>(sheet 1 of 2)<br>ECN 191786 (10/28/93)<br>ECN 176589 (11/16/93)<br>ECN 605639 (01/17/94)<br>ECN 605649 (08/01/94)<br>ECN 617714 (01/30/95)<br>ECN 626021 (10/10/95) | Rev. 4 |
| H-6-1557 | STRUCTURAL ELEVATION, DETAILS & SECTIONS<br>(sheet 1 of 2)<br>CEO 041129 (01/08/87) | Rev. 3 |
| H-6-1557 | STRUCTURAL ELEVATION, DETAILS & SECTIONS<br>(sheet 2 of 2) | Rev. 1 |
| H-6-1558 | STRUCTURAL PLAN, SECTIONS, EL & DETAILS | Rev. 2 |
| H-6-1559 | HVAC/PIPING PLANS, ELEVATION & SECTIONS<br>(sheet 1 of 3)<br>ECN 173594 (05/23/93)<br>ECN 608525 (11/08/94)<br>ECN 613355 (12/15/94)<br>ECN 623622 (08/21/95)<br>ECN 626021 (10/10/95)<br>ECN 626113 (12/08/95) | Rev. 5 |
| H-6-1559 | HVAC/PIPING PLANS, ELEVATION & SECTIONS<br>(sheet 2 of 3)<br>ECN 173594 (05/20/93)<br>ECN 623622 (05/21/95)<br>ECN 626021 (10/10/95) | Rev. 2 |

| | | | |
|---|---|---|---|
| 1 | H-6-1559 | PIPING ISOMETRICS<br>(sheet 3 of 3)<br>ECN 173588 (10/22/92)<br>ECN 608525 (11/08/94)<br>ECN 613355 (12/15/94) | Rev. 1 |
| 2 | H-6-1560 | ELEC/PIPING EL, SECT, DIAG, SCHED & DET<br>ECN 616253 (12/27/95)<br>ECN 617748 (04/24/95)<br>ECN 626001 (10/10/95)<br>ECN 626113 (12/08/95) | Rev. 4 |
| 3 | H-6-1561 | ELECTRICAL PLANS, EL, DIAG & DET<br>ECN 196404 (05/10/95)<br>ECN 617727 (07/10/95)<br>ECN 617748 (04/24/95)<br>ECN 626021 (10/10/95)<br>ECN 626113 (12/08/96) | Rev. 6 |
| 4 | H-6-1608 | ELECTRICAL RADIO FIRE ALARM PLAN AND DIAGRAM<br>ECN 196404 (05/10/95)<br>ECN 626021 (10/10/95)<br>ECN 626113 (12/08/95) | Rev. 3 |
| 5 | H-6-10610 | FIRE PROTECTION SPRINKLER SYSTEM<br>(sheet 1 of 2)<br>ECN 626021 (10/10/95)<br>ECN 626113 (12/08/95) | Rev. 0 |
| 6 | H-6-10610 | FIRE PROTECTION DETAILS AND SECTIONS<br>(sheet 2 of 2)<br>ECN 196404 (05/10/95)<br>ECN 626021 (10/10/95)<br>ECN 626113 (12/08/95) | Rev. 0 |

7

IPF #10

# ENGINEERING CHANGE NOTICE

Page 1 of 3

1. ECN 626113

Proj. ECN

| 2. ECN Category (mark one) | 3. Originator's Name, Organization, MSIN, and Telephone No. | 3a. USQ Required? | 4. Date |
|---|---|---|---|
| Supplemental [X]<br>Direct Revision []<br>Change ECN []<br>Temporary []<br>Standby []<br>Supersedure []<br>Cancel/Void [] | LJ GASCHOTT, 87250, T4-03, 373-4367 | [] Yes [X] No | December 8, 1995 |
| | 5. Project Title/No./Work Order No.<br>NRDWSF/A5V78 | 6. Bldg./Sys./Fac. No.<br>616 | 7. Approval Designator<br>N/A |
| | 8. Document Numbers Changed by this ECN (includes sheet no. and rev.)<br>SEE BLOCK 12 | 9. Related ECN No(s).<br>626114 | 10. Related PO No.<br>N/A |

| 11a. Modification Work | 11b. Work Package No. | 11c. Modification Work Complete | 11d. Restored to Original Condition (Temp. or Standby ECN only) |
|---|---|---|---|
| [] Yes (fill out Blk. 11b)<br>[X] No (NA Blks. 11b, 11c, 11d) | N/A | N/A<br>Cog. Engineer Signature & Date | N/A<br>Cog. Engineer Signature & Date |

12. Description of Change

Change the Essential/Support status of the drawings listed on page 3 of this ECN.

13a. Justification (mark one)

| | | | | | | | |
|---|---|---|---|---|---|---|---|
| Criteria Change | [X] | Design Improvement | [] | Environmental | [] | Facility Deactivation | [] |
| As-Found | [] | Facilitate Const | [] | Const. Error/Omission | [] | Design Error/Omission | [] |

13b. Justification Details

Drawings on the essential and support drawing list have been re-evaluated. Essential drawings were determined to be unnecessary, and are changed to support drawings.

Sta 3 4, 15, 20

14. Distribution (include name, MSIN, and no. of copies)

LJ Gaschott, T4-03, 1
File, T4-03, 1
NP Emerson, T4-03, 1
PJ Crane, T4-04, 1
JT Schorzman, T4-04, 1

RELEASE STAMP
JAN 10 1996
DATE:
STA: 5
HANFORD RELEASE
ID: 12

A-7900-013-2 (11/94) GEF095

A-7900-013-1

# ENGINEERING CHANGE NOTICE



1. ECN (use no. from pg. 1) 626113 LJ 1/10/96

| 15. Design Verification Required | 16. Cost Impact | | | | | | 17. Schedule Impact (days) | |
|---|---|---|---|---|---|---|---|---|
| | ENGINEERING | | | CONSTRUCTION | | | | |
| [] Yes | Additional | [] | $ N/A | Additional | [] | $ N/A | Improvement | [] N/A |
| [X] No | Savings | [] | $ | Savings | [] | $ | Delay | [] |

18. Change Impact Review: Indicate the related documents (other than the engineering documents identified on Side 1) that will be affected by the change described in Block 12. Enter the affected document number in Block 19.

| | | | | | |
|---|---|---|---|---|---|
| SDD/DD | [] | Seismic/Stress Analysis | [] | Tank Calibration Manual | [] |
| Functional Design Criteria | [] | Stress/Design Report | [] | Health Physics Procedure | [] |
| Operating Specification | [] | Interface Control Drawing | [] | Spares Multiple Unit Listing | [] |
| Criticality Specification | [] | Calibration Procedure | [] | Test Procedures/Specification | [] |
| Conceptual Design Report | [] | Installation Procedure | [] | Component Index | [] |
| Equipment Spec. | [] | Maintenance Procedure | [] | ASME Coded Item | [] |
| Const. Spec. | [] | Engineering Procedure | [] | Human Factor Consideration | [] |
| Procurement Spec. | [] | Operating Instruction | [] | Computer Software | [] |
| Vendor Information | [] | Operating Procedure | [] | Electric Circuit Schedule | [] |
| OM Manual | [] | Operational Safety Requirement | [] | ICRS Procedure | [] |
| FSAR/SAR | [] | IEFD Drawing | [] | Process Control Manual/Plan | [] |
| Safety Equipment List | [] | Cell Arrangement Drawing | [] | Process Flow Chart | [] |
| Radiation Work Permit | [] | Essential Material Specification | [] | Purchase Requisition | [] |
| Environmental Impact Statement | [] | Fac. Proc. Samp. Schedule | [] | Tickler File | [] |
| Environmental Report | [] | Inspection Plan | [] | Essential/Support Dwg List | [X] |
| Environmental Permit | [] | Inventory Adjustment Request | [] | | [] |

19. Other Affected Documents: (NOTE: Documents listed below will not be revised by this ECN.) Signatures below indicate that the signing organization has been notified of other affected documents listed below.

| Document Number/Revision | Document Number/Revision | Document Number Revision |
|---|---|---|
| WHC-SD-WM-TI-399 (This is changed by ECN 626114) | | |

20. Approvals

| Signature | Date | Signature | Date |
|---|---|---|---|
| OPERATIONS AND ENGINEERING | | ARCHITECT-ENGINEER | |
| Cog. Eng. LJ Gaschott LJ Gaschott | 12/8/95 | PE | |
| Cog. Mgr. DB Powell DB Powell | 12/8/95 | QA | |
| QA | | Safety | |
| Safety | | Design | |
| Environ. | | Environ. | |
| Other | | Other | |
| | | DEPARTMENT OF ENERGY | |
| | | Signature or a Control Number that tracks the Approval Signature | |
| | | ADDITIONAL | |

Change the essential/support status of the following drawings:

H-6-1552, Sh. 1, Rev. 4, Change from essential to support
H-6-1553, Sh. 1, Rev. 4, Change from essential to support
H-6-1559, Sh. 1, Rev. 5, Change from essential to support
H-6-1560, Sh. 1, Rev. 4, Change from essential to support
H-6-1561, Sh. 1, Rev. 6, Change from essential to support
H-6-1608, Sh. 1, Rev. 3, Change from essential to support
H-6-10610, Sh. 1, Rev. 0, Change from essential to support
H-6-10610, Sh. 2, Rev. 0, Change from essential to support

IPF 10

# ESSENTIAL
## ENGINEERING CHANGE NOTICE

Page 1 of 3

1. ECN 626021

Proj. ECN

| 2. ECN Category (mark one) | 3. Originator's Name, Organization, MSIN, and Telephone No. | 3a. USQ Required? | 4. Date |
|---|---|---|---|
| Supplemental [X]<br>Direct Revision []<br>Change ECN []<br>Temporary []<br>Standby []<br>Supersedure []<br>Cancel/Void [] | LJ Gaschott, 87250, T4-03, 373-4367 | [] Yes [X] No | October 10, 1995 |
| | 5. Project Title/No./Work Order No.<br>616 Historical Drawings | 6. Bldg./Sys./Fac. No.<br>616 | 7. Approval Designator<br>NA |
| | 8. Document Numbers Changed by this ECN (includes sheet no. and rev.)<br>See Block 12 | 9. Related ECN No(s).<br>NA | 10. Related PO No.<br>NA |

| 11a. Modification Work | 11b. Work Package No. | 11c. Modification Work Complete | 11d. Restored to Original Condition (Temp. or Standby ECN only) |
|---|---|---|---|
| [] Yes (fill out Blk. 11b)<br>[X] No (NA Blks. 11b, 11c, 11d) | NA | NA<br>Cog. Engineer Signature & Date | NA<br>Cog. Engineer Signature & Date |

12. Description of Change

Drawings affected by this ECN: See page 3

Add the following statement to all drawings affected by this ECN:
"HISTORICAL -- For Historical Reference Only for 616. Not to be used as "as-built" drawing. This drawing may not reflect current configuration of 616."

13a. Justification (mark one)

| | | | | | | | |
|---|---|---|---|---|---|---|---|
| Criteria Change | [X] | Design Improvement | [] | Environmental | [] | Facility Deactivation | [] |
| As-Found | [] | Facilitate Const | [] | Const. Error/Omission | [] | Design Error/Omission | [] |

13b. Justification Details

These drawings have not been "as-built" per WHC-CM-5-34. They are considered to be of minimal value to current operations, but are a good historical reference.

14. Distribution (include name, MSIN, and no. of copies)

LJ Gaschott, T4-03, 2
SWDPC, T4-03, 1
Rel sta 4, 5, 6, 20
PJ Crane, T4-04, 1
JT Schorzman, T4-04, 1
NP Emerson, T4-04,1

Sta 3, 4, 5, 15, 20

RELEASE STAMP

OFFICIAL RELEASE BY WHC 55
DATE OCT 20 1995
Sta 5

A-7900-013-2 (11/94) GEF095

A-7900-013-1

# ENGINEERING CHANGE NOTICE



1. ECN (use no. from pg. 1) 626021

| 15. Design Verification Required | 16. Cost Impact | | | | | | 17. Schedule Impact (days) | |
|---|---|---|---|---|---|---|---|---|
| | ENGINEERING | | | CONSTRUCTION | | | | |
| [] Yes | Additional | [] | $ | Additional | [] | $ | Improvement | [] |
| [X] No | Savings | [] | $ | Savings | [] | $ | Delay | [] |

18. Change Impact Review: Indicate the related documents (other than the engineering documents identified on Side 1) that will be affected by the change described in Block 12. Enter the affected document number in Block 19.

| | | | | | |
|---|---|---|---|---|---|
| SDD/DD | [] | Seismic/Stress Analysis | [] | Tank Calibration Manual | [] |
| Functional Design Criteria | [] | Stress/Design Report | [] | Health Physics Procedure | [] |
| Operating Specification | [] | Interface Control Drawing | [] | Spares Multiple Unit Listing | [] |
| Criticality Specification | [] | Calibration Procedure | [] | Test Procedures/Specification | [] |
| Conceptual Design Report | [] | Installation Procedure | [] | Component Index | [] |
| Equipment Spec. | [] | Maintenance Procedure | [] | ASME Coded Item | [] |
| Const. Spec. | [] | Engineering Procedure | [] | Human Factor Consideration | [] |
| Procurement Spec. | [] | Operating Instruction | [] | Computer Software | [] |
| Vendor Information | [] | Operating Procedure | [] | Electric Circuit Schedule | [] |
| OM Manual | [] | Operational Safety Requirement | [] | ICRS Procedure | [] |
| FSAR/SAR | [] | IEFD Drawing | [] | Process Control Manual/Plan | [] |
| Safety Equipment List | [] | Cell Arrangement Drawing | [] | Process Flow Chart | [] |
| Radiation Work Permit | [] | Essential Material Specification | [] | Purchase Requisition | [] |
| Environmental Impact Statement | [] | Fac. Proc. Samp. Schedule | [] | Tickler File | [] |
| Environmental Report | [] | Inspection Plan | [] | | [] |
| Environmental Permit | [] | Inventory Adjustment Request | [] | NONE | [X] |

19. Other Affected Documents: (NOTE: Documents listed below will not be revised by this ECN.) Signatures below indicate that the signing organization has been notified of other affected documents listed below.

| Document Number/Revision | Document Number/Revision | Document Number Revision |
|---|---|---|
| N/A | | |

20. Approvals

| Signature | Date | Signature | Date |
|---|---|---|---|
| OPERATIONS AND ENGINEERING | | ARCHITECT-ENGINEER | |
| Cog. Eng. LJ Gaschott LJ Gaschott | 10/12/95 | PE | |
| Cog. Mgr. DB Powell DB Powell | 10/16/95 | QA | |
| QA | | Safety | |
| Safety | | Design | |
| Environ. | | Environ. | |
| Other | | Other | |
| RM Irwin | | | |
| | | DEPARTMENT OF ENERGY | |
| | | Signature or a Control Number that tracks the Approval Signature | |
| | | ADDITIONAL | |

| DRAWING NO | SHEET | REV |
|---|---|---|
| H 060000977 | 1 | C01 |
| H 060001553 | 1 | R04 |
| H 060001554 | 1 | R04 |
| H 060001554 | 2 | C00 |
| H 060001556 | 1 | R04 |
| H 060001559 | 1 | R05 |
| H 060001559 | 2 | R02 |
| H 060001560 | 1 | R04 |
| H 060001561 | 1 | R06 |
| H 060001608 | 1 | C03 |
| H 060010608 | 1 | C00 |
| H 060010610 | 1 | C00 |
| H 060010610 | 2 | C00 |
| H 130000014 | 1 | C00 |

# ENGINEERING CHANGE NOTICE



1. ECN 191786

Proj. ECN

| 2. ECN Category (mark one) | 3. Originator's Name, Organization, MSIN, and Telephone No. | | 4. Date |
|---|---|---|---|
| Supplemental [x]<br>Direct Revision []<br>Change ECN []<br>Temporary []<br>Standby []<br>Supersedure []<br>Cancel/Void [] | D.B. Bodily, 87250, T4-03, 373-2188 | | 10/28/93 |
| | 5. Project Title/No./Work Order No.<br>616 LIFTING PLATFORM | 6. Bldg./Sys./Fac. No.<br>616 | 7. Impact Level<br>3SQ |
| | 8. Document Numbers Changed by this ECN (includes sheet no. and rev.)<br>SEE BLOCK 12 | 9. Related ECN No(s).<br>N/A | 10. Related PO No.<br>N/A |

| 11a. Modification Work | 11b. Work Package No. | 11c. Modification Work Complete | 11d. Restored to Original Condition (Temp. or Standby ECN only) |
|---|---|---|---|
| [X] Yes (fill out Blk. 11b)<br>[] No (NA Blks. 11b, 11c, 11d) | 2X-93-00231 | Cog. Engineer Signature & Date | N/A<br>Cog. Engineer Signature & Date |

12. Description of Change

1) Add a sheet 2 and sheet 3 to drawing H-6-1556 Rev. 3., SHT. 1

2) Add drawings and details on page 3 of this ECN to sheet 2 of drawing H-6-1556 Rev. 0.

3) Add assembly and detail drawings on page 4 of this ECN to sheet 3 of drawing H-6-1556 Rev. 0.

4) Add information per the clouded area on page 5 of this ECN to drawing H-6-1556 Rev. 3

| 13a. Justification (mark one) | | | | | | | |
|---|---|---|---|---|---|---|---|
| | Criteria Change | [] | Design Improvement | [x] | Environmental | [] | |
| As-Found | [] | Facilitate Const. | [] | Const. Error/Omission | [] | Design Error/Omission | [] |

13b. Justification Details

These drawings and details document the location of the lifting platform at 616.

14. Distribution (include name, MSIN, and no. of copies)

D.B. Bodily, T4-03, 1
S. Griffin, T4-03, 1 (File copy)
S. Turner, T4-06, 1
J. Elliott, T4-06, 1

STA #4 R1-29

RELEASE STAMP

OFFICIAL RELEASE BY WHC 63

DATE NOV 04 1993

Sta #6

A-7900-013-2 (06/92) GEF095

# ENGINEERING CHANGE NOTICE



1. ECN (use no. from pg. 1): 191786

| 15. Design Verification Required | 16. Cost Impact | | | | | | 17. Schedule Impact (days) | | |
|---|---|---|---|---|---|---|---|---|---|
| | ENGINEERING | | | CONSTRUCTION | | | | | |
| [X] Yes | Additional | [] | $ | Additional | [] | $ | Improvement | [] | |
| [] No | Savings | [] | $ N/A | Savings | [] | $ N/A | Delay | [] | N/A |

18. Change Impact Review: Indicate the related documents (other than the engineering documents identified on Side 1) that will be affected by the change described in Block 12. Enter the affected document number in Block 19.

| | | | | | |
|---|---|---|---|---|---|
| SDD/DD | [] | Seismic/Stress Analysis | [] | Tank Calibration Manual | [] |
| Functional Design Criteria | [] | Stress/Design Report | [] | Health Physics Procedure | [] |
| Operating Specification | [] | Interface Control Drawing | [] | Spares Multiple Unit Listing | [] |
| Criticality Specification | [] | Calibration Procedure | [] | Test Procedures/Specification | [] |
| Conceptual Design Report | [] | Installation Procedure | [] | Component Index | [] |
| Equipment Spec. | [] | Maintenance Procedure | [] | ASME Coded Item | [] |
| Const. Spec. | [] | Engineering Procedure | [] | Human Factor Consideration | [] |
| Procurement Spec. | [] | Operating Instruction | [] | Computer Software | [] |
| Vendor Information | [] | Operating Procedure | [] | Electric Circuit Schedule | [] |
| OM Manual | [] | Operational Safety Requirement | [] | ICRS Procedure | [] |
| FSAR/SAR | [] | IEFD Drawing | [] | Process Control Manual/Plan | [] |
| Safety Equipment List | [] | Cell Arrangement Drawing | [] | Process Flow Chart | [] |
| Radiation Work Permit | [] | Essential Material Specification | [] | Purchase Requisition | [] |
| Environmental Impact Statement | [] | Fac. Proc. Samp. Schedule | [] | | [] |
| Environmental Report | [] N/A | Inspection Plan | [] N/A | | [] N/A |
| Environmental Permit | [] | Inventory Adjustment Request | [] | | [] |

19. Other Affected Documents: (NOTE: Documents listed below will not be revised by this ECN.) Signatures below indicate that the signing organization has been notified of other affected documents listed below.

| Document Number/Revision | Document Number/Revision | Document Number Revision |
|---|---|---|
| N/A | | |

20. Approvals

| | Signature | Date | | Signature | Date |
|---|---|---|---|---|---|
| OPERATIONS AND ENGINEERING | | | ARCHITECT-ENGINEER | | |
| Cog Engineer | D. B. Bodily | 10/28/93 | PE | | |
| Cog. Mgr. | [illegible] | 11/2/93 | QA | | |
| QA | Jay Elliott | 11-2-93 | Safety | | |
| Safety | [illegible] | 11-4-93 | Design | | |
| Security | | | Environ. | | |
| Environ. | | | Other | | |
| Projects/Programs | | | | | |
| Tank Waste Remediation System | | | | | |
| Facilities Operations | | | DEPARTMENT OF ENERGY | | |
| Restoration & Remediation | | | Signature or Letter No. | | |
| Operations & Support Services | | | | | |
| IRM | | | ADDITIONAL | | |
| Other Ind. Rep. | P. M. Rakowski | 10/28/93 | | | |
| | [illegible] | 11-2-93 | | | |

ENGINEERING CHANGE NOTICE CONTINUATION SHEET

PAGE 3 OF 5

1. ECN 191786

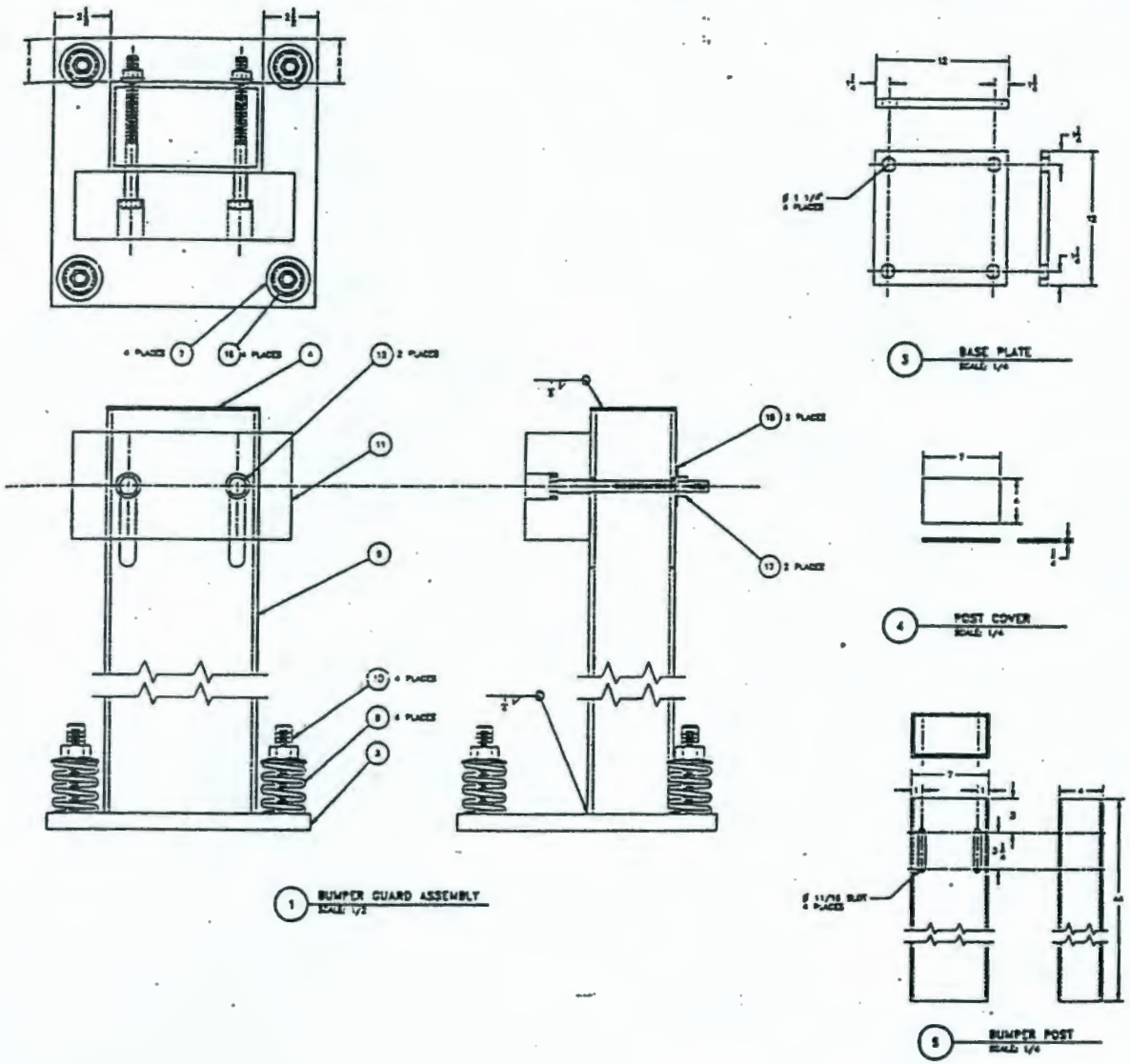


PARTS LIST/MATERIAL LIST

| | | | | | |
|---|---|---|---|---|---|
| X | -010 | ASSEMBLY, DOCK BUMPER GUARD | | 3 | 1 |
| | | | | | 2 |
| 1 | -001 | BASE PLATE, 12" x 12" x 3/4" THK. | ASTM A 36 CS | 3 | 3 |
| 1 | -002 | POST COVER, 7" x 4" x 1/4" THK. | ASTM A 36 CS | 3 | 4 |
| 1 | -003 | BUMPER POST, 7" x 4" x 1/4" THK. x 44" L | ASTM A 36 CS | 3 | 5 |
| | | | | | 6 |
| 4 | | FLAT WASHER, 1 3/4" | | 3 | 7 |
| 4 | | [illegible] | | 3 | 8 |
| | | | | | 9 |
| 4 | | [illegible] | [illegible] | 3 | 10 |
| 1 | | MOLDED DOCK BUMPER, [illegible] | | 3 | 11 |
| 2 | | HEX CAP SCREW 3/4-13UNC-3A [illegible] | | 3 | 12 |
| | | | | | 13 |
| | | | | | 14 |
| 3 | | WASHER FLAT SS 1/2" TYPE 18-8 | [illegible] | 3 | 15 |
| 4 | | WASHER FLAT SS 3/4" TYPE 18-8 | [illegible] | 3 | 16 |
| 2 | | HEX NUT SS 1/2-13UNC-2B | [illegible] | 3 | 17 |
| | | | | | 18 |
| | | | | | 19 |
| | | | | | 20 |

U.S. DEPARTMENT OF ENERGY

BUMPER DOCK ASSEMBLY

F 010 H-6-1556 0

1. ECN 191786

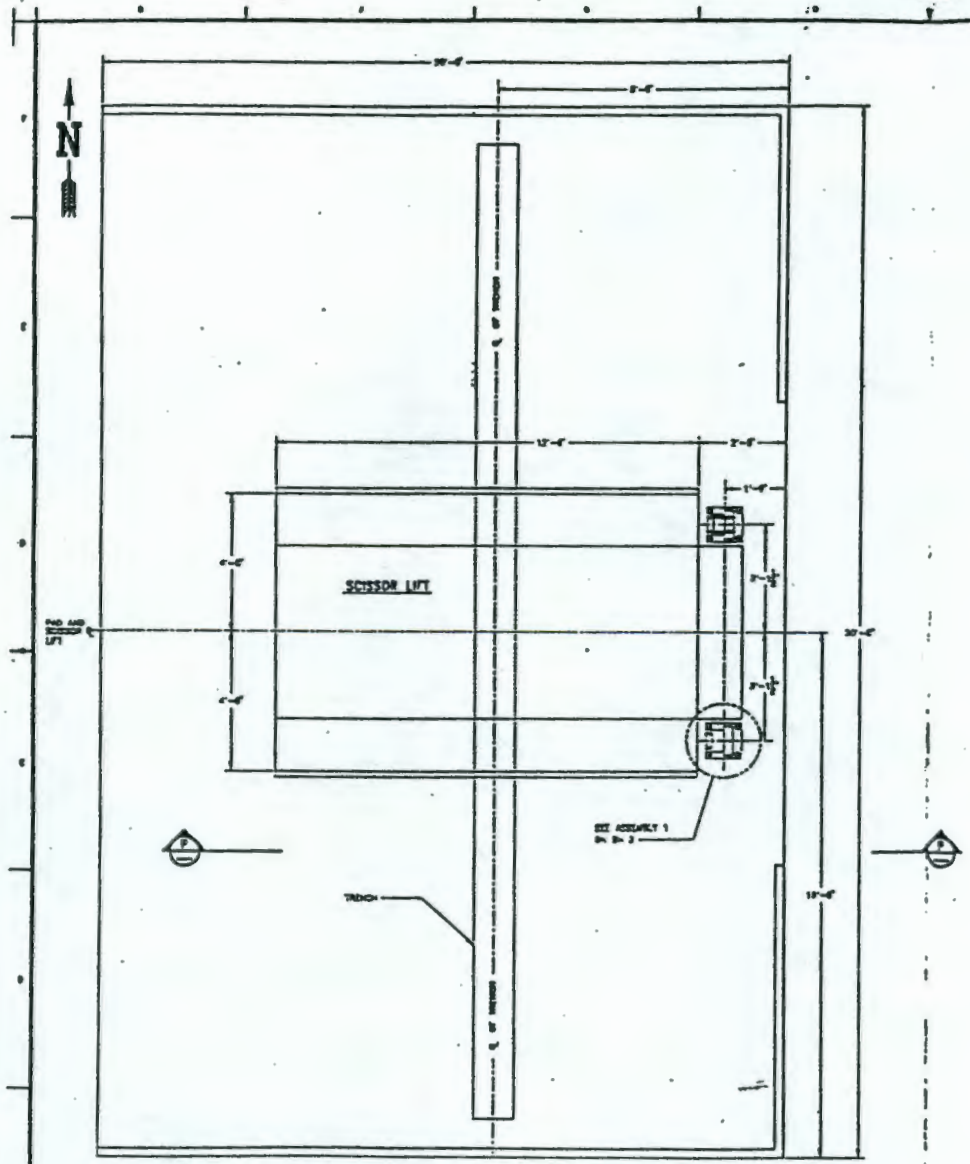


LOADING PAD PLAN
SCALE: 3/4" = 1'-0"

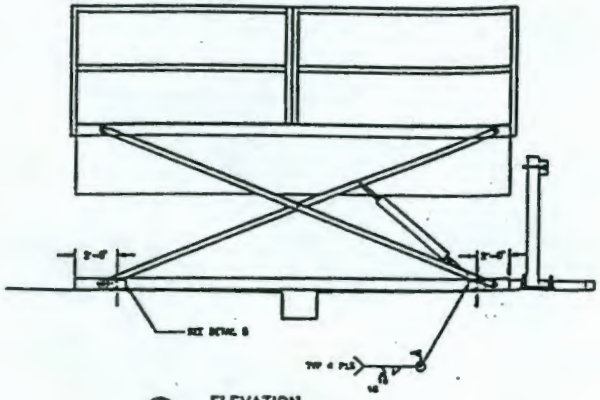


ELEVATION
SCALE: 3/4" = 1'-0"

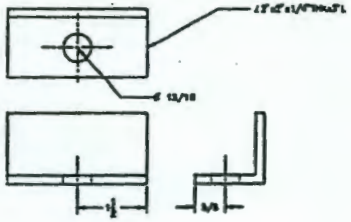

DETAIL 5
SCALE: 3/4"

GENERAL NOTES: (CONTINUING FROM SHEET 1)

8. REMOVE ALL BURRS AND BREAK SHARP EDGES.
9. PREPARE AND PAINT ALL EXPOSED CARBON STEEL SURFACES WITH ONE COAT OF INORGANIC ZINC PRIMER, AND TWO FINISH COATS OF INORGANIC ZINC. FINAL COLOR YELLOW.
10. ALL DIMENSIONS ARE IN INCHES UNLESS NOTED OTHERWISE. TOLERANCES ON FRACTIONS ± 1/16" AND ANGLES ± 2.
11. USE PARTS IN PARTS LIST OR DOE ENGINEER APPROVED EQUAL.
12. WELD AND INSPECT PER AWS D1.3 VT WELDS AT FINAL PASS. DOCUMENT WELDER PER APPROVED INSPECTION PLAN. WELDING QUALIFICATIONS PER AWSC SECTION 4 ARE ACCEPTABLE.

U.S. DEPARTMENT OF ENERGY

LOADING PAD PLAN

H-6-1556 0

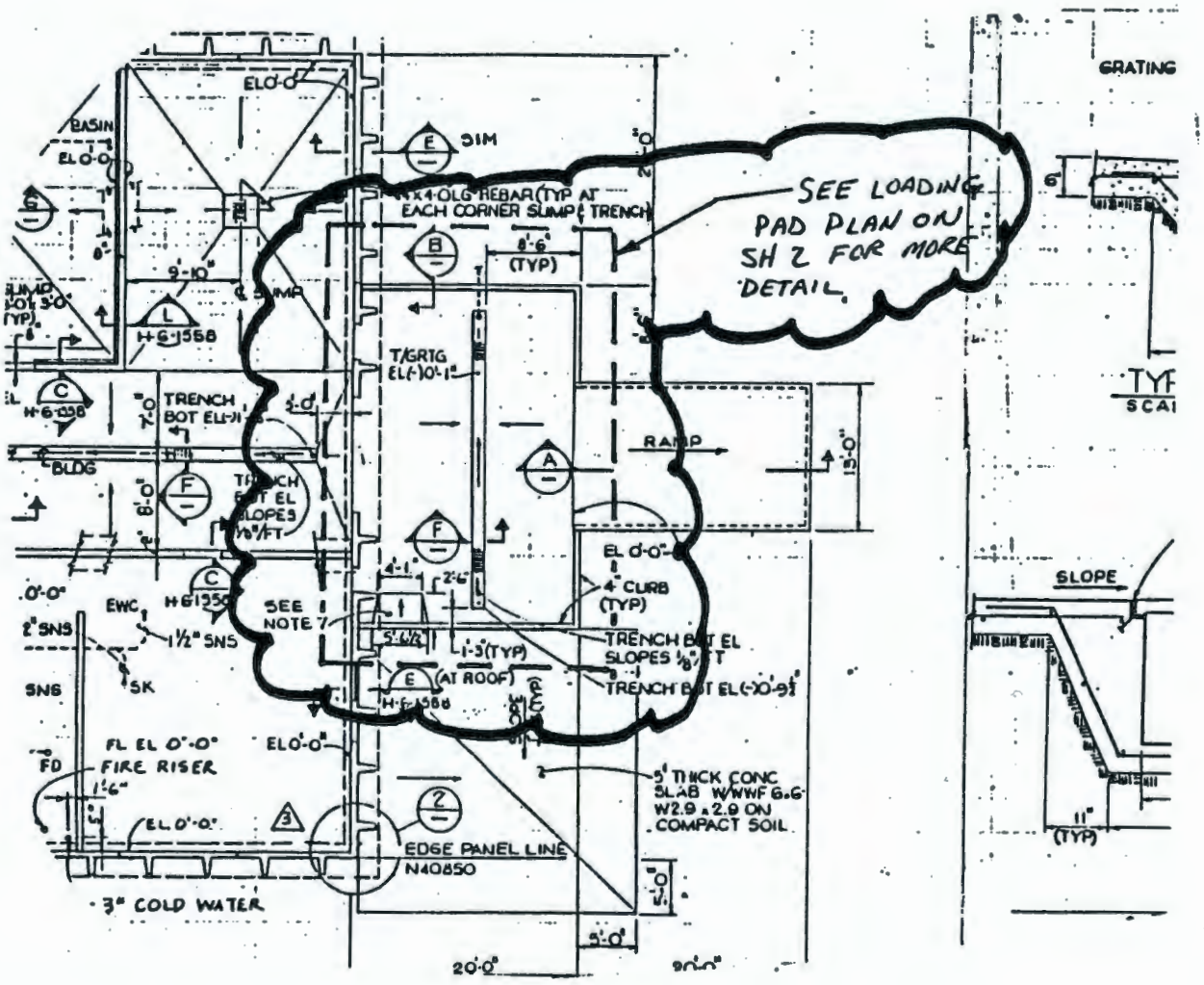
SEE LOADING PAD PLAN ON SH 2 FOR MORE DETAIL.
GRATING
BASIN
EL 0'-0"
SIM
4 X 4 OLG REBAR (TYP AT EACH CORNER SUMP & TRENCH)
8'-6" (TYP)
9'-10"
RAMP
T/GRTG EL(-)10'-1"
TRENCH BOT EL(-)1
BLDG
TRENCH BOT EL SLOPES 1/8"/FT
EL 0'-0"
4" CURB (TYP)
SEE NOTE 7
EWC
1½" SNS
SK
TRENCH BOT EL SLOPES 1/8"/FT
TRENCH BOT EL(-)10'-9½"
(AT ROOF)
FL EL 0'-0"
FIRE RISER
FD
5" THICK CONC SLAB W/WWF 6x6 W2.9 x 2.9 ON COMPACT SOIL
EDGE PANEL LINE N40850
3" COLD WATER
20'-0"
SLOPE
11" (TYP)

# ENGINEERING CHANGE NOTICE

CECN

Page 1 of 3

1. ECN 176589

Proj. ECN

| ECN Category (mark one) | 3. Originator's Name, Organization, MSIN, and Telephone No. | | 4. Date |
|---|---|---|---|
| Supplemental ☐ | J.E. CONNER (C-1870), 23440, T2-03, 3-3154 | | Nov 16, 1993 |
| Direct Revision ☐ | 5. Project Title/No./Work Order No. | 6. Bldg./Sys./Fac. No. | 7. Impact Level |
| Change ECN ☒ | 616 LIFTING PLATFORM | 616 | 3SQ |
| Temporary ☐ | | | |
| Standby ☐ | 8. Document Numbers Changed by this ECN (includes sheet no. and rev.) | 9. Related ECN No(s). | 10. Related PO No. |
| Supersedure ☐ | | | |
| Cancel/Void ☐ | H-6-1556, Rev 3, Sht 1 | 191786 | N/A |

| 11a. Modification Work | 11b. Work Package No. | 11c. Modification Work Completed | 11d. Restored to Original Condition (Temp. or Standby ECNs only) |
|---|---|---|---|
| ☒ Yes (fill out Blk. 11b) ☐ No (NA Blks. 11b, 11c, 11d) | W/O 2H9301779F | Cog. Engineer Signature & Date | N/A<br>Cog. Engineer Signature & Date |

12. Description of Change

**THIS ECN CHANGES ECN 191786 IN PART**

(1) CHANGE THE MATERIAL/REFERENCE OF ITEM #5 (BUMPER POST), SHOWN ON ECN 191786, PAGE 3 OF 5 AS FOLLOWS:

CHANGE TO --- ASTM A 500, GR. B WAS --- ASTM A 36

(2) PAGE 3 OF 5, OF ECN 191786, DETAIL OF BUMPER POST IS AS FOLLOWS:

CHANGE TO ---

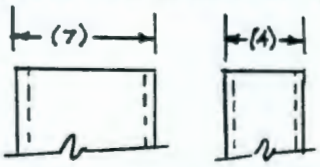


WAS ---

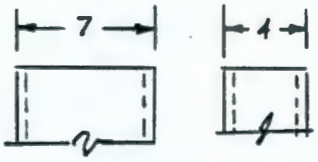


SUPPORT

(3) PAGE 3 OF 5, OF ECN 191786, BUMPER GUARD ASSEMBLY DETAIL, WELDING OF ITEM #4 TO ITEM #5 IS AS FOLLOWS:

CHANGE TO ---

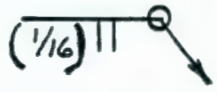


WAS ---

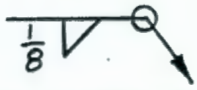


| 13a. Justification (mark one) | 13b. Justification Details |
|---|---|
| Criteria Change ☐ | CHANGES REQUIRED TO CLARIFY WELDING, MATERIAL AND FABRICATION REQUIREMENTS. |
| Design Improvement ☐ | |
| Environmental ☐ | |
| As-Found ☐ | |
| Facilitate Const. ☒ | |
| Const. Error/Omission ☐ | |
| Design Error/Omission ☒ | |

14. Distribution (include name, MSIN, and no. of copies)

| | | | |
|---|---|---|---|
| J.E. CONNER, | T2-03 | D. BODILY, | T4-03 |
| M. LACY, | T2-08 | D. POWELL, | T4-03 |
| J. BRESINA, | T2-06 | A. PINES, | T4-10 |
| STA# 4 | R1-29 | | |

RELEASE STAMP

OFFICIAL RELEASE BY WHC 63

DATE NOV 18 1993

Sta #6

A-7900-013 (06/92)

# ENGINEERING CHANGE NOTICE



1. ECN (use no. from pg. 1): 176589

| 15. Design Verification Required | 16. Cost Impact | | 17. Schedule Impact (days) |
|---|---|---|---|
| | ENGINEERING | CONSTRUCTION | |
| ☐ Yes | Additional ☐ $ N/A | Additional ☐ $ N/A | Improvement ☐ N/A |
| ☒ No | Savings ☐ $ | Savings ☐ $ | Delay ☐ |

18. Change Impact Review: Indicate the related documents (other than the engineering documents identified on Side 1) that will be affected by the change described in Block 12. Enter the affected document number in Block 19.

| | | | | | |
|---|---|---|---|---|---|
| SDD/DD | ☐ | Seismic/Stress Analysis | ☐ | Tank Calibration Manual | ☐ |
| Functional Design Criteria | ☐ | Stress/Design Report | ☐ | Health Physics Procedure | ☐ |
| Operating Specification | ☐ | Interface Control Drawing | ☐ | Spares Multiple Unit Listing | ☐ |
| Criticality Specification | ☐ | Calibration Procedure | ☐ | Test Procedures/Specification | ☐ |
| Conceptual Design Report | ☐ | Installation Procedure | ☐ | Component Index | ☐ |
| Equipment Spec. | ☐ | Maintenance Procedure | ☐ | ASME Coded Item | ☐ |
| Const. Spec. | ☐ | Engineering Procedure | ☐ | Human Factor Consideration | ☐ |
| Procurement Spec. | ☐ | Operating Instruction | ☐ | Computer Software | ☐ |
| Vendor Information | ☐ | Operating Procedure | ☐ | Electric Circuit Schedule | ☐ |
| OM Manual | ☐ | Operational Safety Requirement | ☐ | ICRS Procedure | ☐ |
| FSAR/SAR | ☐ | IEFD Drawing | ☐ | Process Control Manual/Plan | ☐ |
| Safety Equipment List | ☐ | Cell Arrangement Drawing | ☐ | Process Flow Chart | ☐ |
| Radiation Work Permit | ☐ | Essential Material Specification | ☐ | Purchase Requisition | ☐ |
| Environmental Impact Statement | ☐ | Fac. Proc. Samp. Schedule | ☐ | | ☐ |
| Environmental Report | ☐ | Inspection Plan | ☐ | N/A | ☐ |
| Environmental Permit | ☐ | Inventory Adjustment Request | ☐ | | ☐ |

19. Other Affected Documents: (NOTE: Documents listed below will not be revised by this ECN.) Signatures below indicate that the signing organization has been notified of other affected documents listed below.

| Document Number/Revision | Document Number/Revision | Document Number/Revision |
|---|---|---|
| N/A | | |
| | | |
| | | |

20. Approvals

| | Signature | Date | | Signature | Date |
|---|---|---|---|---|---|
| OPERATIONS AND ENGINEERING | | | ARCHITECT-ENGINEER | | |
| * Cog. Engineer | D. Rodgers for tel. Con. | 11/17/93 | PE | | |
| * Cog. Mgr. | D. Powell for tel. Con. | 11/17/93 | QA | | |
| * QA | Michael Lacy (1-4) | 11/17/93 | Safety | | |
| * Safety | A. Pines for tel. Con | 11/17/93 | Design | | |
| Security | | | Environ. | | |
| Environ. | | | Other | | |
| Projects/Programs | | | | | |
| Tank Waste Remediation System | | | | | |
| Facilities Operations | | | DEPARTMENT OF ENERGY | | |
| Restoration & Remediation | | | Signature or Letter Number | | |
| Operations & Support Services | | | | | |
| IRM | | | ADDITIONAL | | |
| Other | | | Cog. Eng. (MUSE) | | 11/16/93 |
| Independent Reviewer | | 11/16/93 | | | |
| Requestor | R.R. Bauer | 11-17-93 | | | |

1. ECN 176589

(4) PAGE 4 OF 5 OF ECN 191786, GENERAL NOTE 12 IS AS FOLLOWS:

CHANGE TO --- 12. WELD AND INSPECT PER AWS D1.1 ... ... ...

WAS --- 12. WELD AND INSPECT PER AWS D1.3 ... ... ...

# ENGINEERING CHANGE NOTICE

Page 1 of 3

1. ECN 605639

Proj. ECN

| 2. ECN Category (mark one) | 3. Originator's Name, Organization, MSIN, and Telephone No. MLZWB | | 4. Date |
|---|---|---|---|
| Supplemental [] | D. B. Bodily, 87250, T4-03, 373-2188 | | 1/17/94 |
| Direct Revision [] | 5. Project Title/No./Work Order No. | 6. Bldg./Sys./Fac. No. | 7. Impact Level |
| Change ECN [x] | 616 LIFTING ~~2X-93-231~~ PLATFORM | 616 | 3SQ |
| Temporary [] | | | |
| Standby [] | 8. Document Numbers Changed by this ECN (includes sheet no. and rev.) | 9. Related ECN No(s). | 10. Related PO No. |
| Supersedure [] | See Block 12 | ECN 191786 | N/A |
| Cancel/Void [] | | | |

| 11a. Modification Work | 11b. Work Package No. | 11c. Modification Work Complete | 11d. Restored to Original Condition (Temp. or Standby ECN only) |
|---|---|---|---|
| [X] Yes (fill out Blk. 11b) | 2X-93-231 | | N/A |
| [] No (NA Blks. 11b, 11c, 11d) | | Cog. Engineer Signature & Date | Cog. Engineer Signature & Date |

**12. Description of Change**

Delete all-around designation on weld symbol in elevation detail "P" on drawing H-6-1556 Sht. ~~2~~ 1 Rev. ~~0~~ 3, and add note as shown on page 3 of this ECN.

1/17/94

11/29/94

| 13a. Justification (mark one) | | | | | | | |
|---|---|---|---|---|---|---|---|
| | Criteria Change | [] | Design Improvement | [] | Environmental | [] | |
| As-Found | [] | Facilitate Const. | [] | Const. Error/Omission | [] | Design Error/Omission | [x] |

**13b. Justification Details**

Weld cannot be completed as shown in weld callout.

**14. Distribution (include name, MSIN, and no. of copies)**

D.B. Bodily, T4-03, 1
S. Griffin, T4-03, 1
S. Turner, T4-06, 1
J. Elliott, T4-06, 1

Sta. 3, 4, 6

RELEASE STAMP

OFFICIAL RELEASE BY WHC
DATE JAN 20 1994
55 Sta 6

A-7900-013-2 (06/92) GEF095

A-7900-013-1 (06/92)

# ENGINEERING CHANGE NOTICE



1. ECN (use no. from pg. 1): 605639

| 15. Design Verification Required | 16. Cost Impact | | 17. Schedule Impact (days) |
|---|---|---|---|
| | ENGINEERING N/A | CONSTRUCTION | N/A |
| [X] Yes | Additional [] $ | Additional [] $ | Improvement [] |
| [] No | Savings [] $ | Savings [] $ | Delay [] |

18. Change Impact Review: Indicate the related documents (other than the engineering documents identified on Side 1) that will be affected by the change described in Block 12. Enter the affected document number in Block 19.

| | | | | | |
|---|---|---|---|---|---|
| SDD/DD | [] | Seismic/Stress Analysis | [] | Tank Calibration Manual | [] |
| Functional Design Criteria | [] | Stress/Design Report | [] | Health Physics Procedure | [] |
| Operating Specification | [] | Interface Control Drawing | [] | Spares Multiple Unit Listing | [] |
| Criticality Specification | [] | Calibration Procedure | [] | Test Procedures/Specification | [] |
| Conceptual Design Report | [] | Installation Procedure | [] | Component Index | [] |
| Equipment Spec. | [] | Maintenance Procedure | [] | ASME Coded Item | [] |
| Const. Spec. | [] | Engineering Procedure | [] | Human Factor Consideration | [] |
| Procurement Spec. | [] | Operating Instruction | [] | Computer Software | [] |
| Vendor Information | [] | Operating Procedure | [] | Electric Circuit Schedule | [] |
| OM Manual | [] | Operational Safety Requirement | [] | ICRS Procedure | [] |
| FSAR/SAR | [] | IEFD Drawing | [] | Process Control Manual/Plan | [] |
| Safety Equipment List | [] | Cell Arrangement Drawing | [] | Process Flow Chart | [] |
| Radiation Work Permit | [] | Essential Material Specification | [] | Purchase Requisition | [] |
| Environmental Impact Statement | [] | Fac. Proc. Samp. Schedule | [] | | [] |
| Environmental Report | [] N/A | Inspection Plan | [] N/A | | [] N/A |
| Environmental Permit | [] | Inventory Adjustment Request | [] | | |

19. Other Affected Documents: (NOTE: Documents listed below will not be revised by this ECN.) Signatures below indicate that the signing organization has been notified of other affected documents listed below.

| Document Number/Revision | Document Number/Revision | Document Number Revision |
|---|---|---|
| N/A | | |

20. Approvals

| | Signature | Date | | Signature | Date |
|---|---|---|---|---|---|
| OPERATIONS AND ENGINEERING | | | ARCHITECT-ENGINEER | | |
| Cog Engineer | [signature] | 1/17/94 | PE | | |
| Cog. Mgr. | [signature] | 1-17-94 | QA | | |
| QA | Jon Elliott | 1-17-94 | Safety | | |
| Safety | [signature] | 1-19-94 | Design | | |
| Security | | | Environ. | | |
| Environ. | | | Other | | |
| Projects/Programs | | | | | |
| Tank Waste Remediation System | | | | | |
| Facilities Operations | | | DEPARTMENT OF ENERGY | | |
| Restoration & Remediation | | | Signature or Letter No. | | |
| Operations & Support Services | | | | | |
| IRM | | | ADDITIONAL | | |
| Other Ind. Review | P.M. Rubode | 1/17/94 | | | |

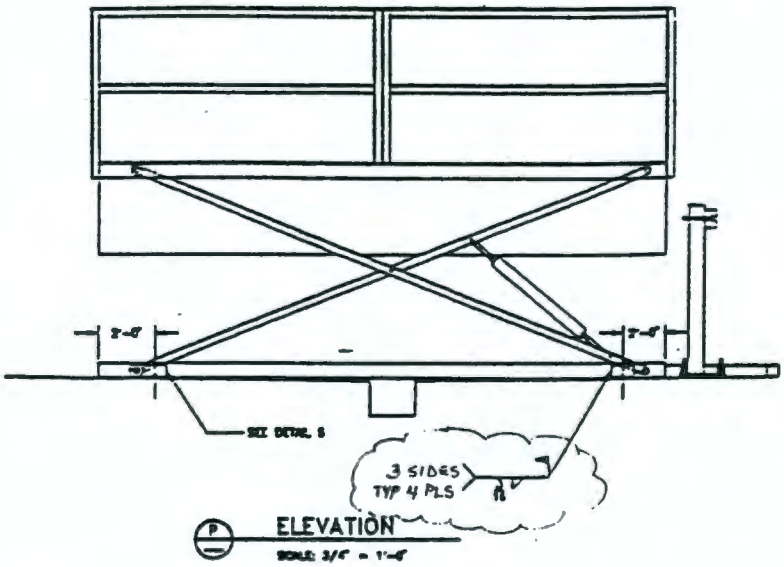
2'-6"
2'-6"
SEE DETAIL 5
3 SIDES
TYP 4 PLS
ELEVATION
SCALE: 3/4" = 1'-0"

# ENGINEERING CHANGE NOTICE

Page 1 of 3

1. ECN 605649

Proj. ECN

| 2. ECN Category (mark one) | 3. Originator's Name, Organization, MSIN, and Telephone No. | | 4. Date |
|---|---|---|---|
| Supplemental [X]<br>Direct Revision []<br>Change ECN []<br>Temporary []<br>Standby []<br>Supersedure []<br>Cancel/Void [] | D.B. BODILY, 87250, T4-03, 373-2188 A130A | | 8-1-94 |
| | 5. Project Title/No./Work Order No.<br>INSTALL SCISSOR LIFT GUARDS | 6. Bldg./Sys./Fac. No.<br>616 | 7. Approval Designator<br>N/A |
| | 8. Document Numbers Changed by this ECN (includes sheet no. and rev.)<br>SEE BLOCK 12 ~~N/A~~ DBB 8/2/94 | 9. Related ECN No(s).<br>N/A | 10. Related PO No.<br>N/A |

| 11a. Modification Work | 11b. Work Package No. | 11c. Modification Work Complete | 11d. Restored to Original Condition (Temp. or Standby ECN only) |
|---|---|---|---|
| [X] Yes (fill out Blk. 11b)<br>[] No (NA Blks. 11b, 11c, 11d) | 2X-94-331 | MAR 06 1995 (12)<br>C L Jackson 3/1/95<br>Cog. Engineer Signature & Date | N/A<br>Cog. Engineer Signature & Date |

12. Description of Change

Revise drawing H-6-1556 sheet ~~2, rev. 0~~ 1 Rev. 4 DBB per telecon 8/2/94 to add scissor lift personnel guard rails per clouded areas on page 3 of this ECN.

Reinstate(Redraw) ~~H-6-~~1556 Sheet 2 at Revision 2 to reflect information contained in ECN-191786 and Sheet 3 of this ECN. Also add additional sheets as necessary.

| 13a. Justification (mark one) | | | | | | | |
|---|---|---|---|---|---|---|---|
| | Criteria Change | [] | Design Improvement | [X] | Environmental | [] | |
| As-Found [] | Facilitate Const. | [] | Const. Error/Omission | [] | Design Error/Omission | [] | |

13b. Justification Details

Installation of the personnel guards protect operators from potential pinch points on the scissor lift.

DESIGN VERIFIED BY INDEPENDENT REVIEW.

14. Distribution (include name, MSIN, and no. of copies)

D.B. Bodily, T4-03, 1
S. Griffin, T4-03, 1 (file copy)
S. Turner, T4-06, 1
CDWS #3, S2-05, 1
CDWS #4, R1-29, 1
CDWS #20, T4-00, 1

RELEASE STAMP

OFFICIAL RELEASE BY WHC (12)
DATE AUG 03 1994
Sta. # 6

A-7900-013-2 (06/94) GEF095

A-7900-013-1 (06/92)

# ENGINEERING CHANGE NOTICE



1. ECN (use no. from pg. 1): 605649

| 15. Design Verification Required | 16. Cost Impact | | | | 17. Schedule Impact (days) | |
|---|---|---|---|---|---|---|
| | ENGINEERING | | CONSTRUCTION | | | |
| [X] Yes | Additional | [] $ N/A | Additional | [] $ | Improvement | [] N/A |
| [] No | Savings | [] $ | Savings | [] $ | Delay | [] |

18. Change Impact Review: Indicate the related documents (other than the engineering documents identified on Side 1) that will be affected by the change described in Block 12. Enter the affected document number in Block 19.

| | | | | | |
|---|---|---|---|---|---|
| SDD/DD | [] | Seismic/Stress Analysis | [] | Tank Calibration Manual | [] |
| Functional Design Criteria | [] | Stress/Design Report | [] | Health Physics Procedure | [] |
| Operating Specification | [] | Interface Control Drawing | [] | Spares Multiple Unit Listing | [] |
| Criticality Specification | [] | Calibration Procedure | [] | Test Procedures/Specification | [] |
| Conceptual Design Report | [] | Installation Procedure | [] | Component Index | [] |
| Equipment Spec. | [] | Maintenance Procedure | [] | ASME Coded Item | [] |
| Const. Spec. | [] | Engineering Procedure | [] | Human Factor Consideration | [] |
| Procurement Spec. | [] | Operating Instruction | [] | Computer Software | [] |
| Vendor Information | [] | Operating Procedure | [] | Electric Circuit Schedule | [] |
| OM Manual | [] | Operational Safety Requirement | [] | ICRS Procedure | [] |
| FSAR/SAR | [] | IEFD Drawing | [] | Process Control Manual/Plan | [] |
| Safety Equipment List | [] | Cell Arrangement Drawing | [] | Process Flow Chart | [] |
| Radiation Work Permit | [] | Essential Material Specification | [] | Purchase Requisition | [] |
| Environmental Impact Statement | [] | Fac. Proc. Samp. Schedule | [] | Tickler File | [] |
| Environmental Report | [] | Inspection Plan | [] | | [] |
| Environmental Permit | [] N/A | Inventory Adjustment Request | [] N/A | | [] N/A |

19. Other Affected Documents: (NOTE: Documents listed below will not be revised by this ECN.) Signatures below indicate that the signing organization has been notified of other affected documents listed below.

| Document Number/Revision | Document Number/Revision | Document Number Revision |
|---|---|---|
| N/A | | |

20. Approvals

| Signature | Date | Signature | Date |
|---|---|---|---|
| OPERATIONS AND ENGINEERING | | ARCHITECT-ENGINEER | |
| Cog. Eng. D. B. Bodely | 8/2/94 | PE | |
| Cog. Mgr. D D Powell | 8/2/94 | QA | |
| QA | | Safety | |
| Safety | | Design | |
| Environ. | | Environ. | |
| Other | | Other | |
| INDP. REVIEW C. L. Jackson | 8/2/94 | | |
| | | DEPARTMENT OF ENERGY | |
| | | Signature or a Control Number that tracks the Approval Signature | |
| | | ADDITIONAL | |

ECN 605649

Date 8-1-94

Page 3 of 3

ENGINEERING CHANGE NOTICE CONTINUATION SHEET

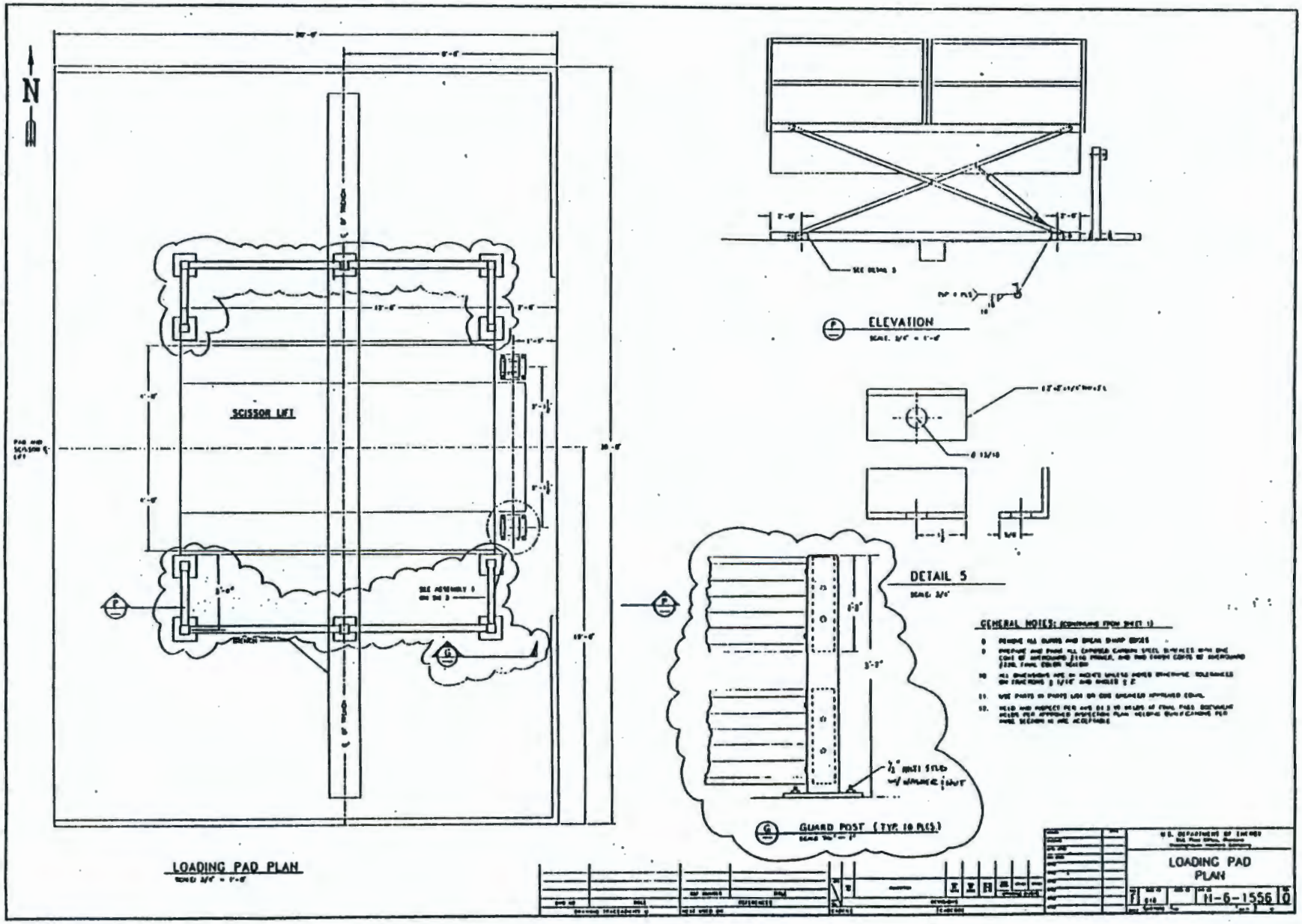


A-7900-013-4 (04/94) GEF094

CECN -

# ENGINEERING CHANGE NOTICE

Page 1 of 2

1. ECN № 617714

Proj. ECN

| 2. ECN Category (mark one) | 3. Originator's Name, Organization, MSIN, and Telephone No. | 3a. USQ Required? | 4. Date |
|---|---|---|---|
| Supplemental [] <br> Direct Revision [] <br> Change ECN [X] <br> Temporary [] <br> Standby [] <br> Supersedure [] <br> Cancel/Void [] | KR Busching, 87250, T4-03, 3-2106 | [] Yes [X] No | 1/30/95 |
| | 5. Project Title/No./Work Order No. | 6. Bldg./Sys./Fac. No. | 7. Approval Designator |
| | Install Scissor Lift Guards | 616 | NA |
| | 8. Document Numbers Changed by this ECN (includes sheet no. and rev.) | 9. Related ECN No(s). | 10. Related PO No. |
| | H-6-1556 SH 1 REV 4 | 605649 | NA |

| 11a. Modification Work | 11b. Work Package No. | 11c. Modification Work Complete | 11d. Restored to Original Condition (Temp. or Standby ECN only) |
|---|---|---|---|
| [X] Yes (fill out Blk. 11b) <br> [] No (NA Blks. 11b, 11c, 11d) | 2X-94-331 | Cog. Engineer Signature & Date | NA <br> Cog. Engineer Signature & Date |

12. Description of Change

CHANGE 1/2" HILTI STUD TO 3/4" HILTI STUD ON SECTION G of page 3 of ECN 605649.

13a. Justification (mark one)

| | | | | | | | |
|---|---|---|---|---|---|---|---|
| Criteria Change | [] | Design Improvement | [X] | Environmental | [] | Facility Deactivation | [] |
| As-Found | [] | Facilitate Const | [] | Const. Error/Omission | [] | Design Error/Omission | [] |

13b. Justification Details

1/2" studs are too small for the holes.
Design Verification by Independent Review

14. Distribution (include name, MSIN, and no. of copies)

CL Jackson, T4-03, 1
GS Turner, T4-06, 1
Rel Sta 3, S2-05; 4, r1-29; 20,T4-00; 5,6; 1EA
SA Griffin (File copy), T4-03, 1
SWDPC, T3-01, 1

RELEASE STAMP

OFFICIAL RELEASE BY WHC (2)
DATE JAN 31 1995
Sta 4

7900-013-2 (11/94) GEF095

A-7900-013-1

# ENGINEERING CHANGE NOTICE



1. ECN (use no. from pg. 1): 617714

| 15. Design Verification Required | 16. Cost Impact | | | | | | 17. Schedule Impact (days) | | |
|---|---|---|---|---|---|---|---|---|---|
| | ENGINEERING | | | CONSTRUCTION | | | | | |
| [X] Yes | Additional | [] | $ | Additional | [] | $ | Improvement | [] | |
| [] No | Savings | [] | $NA | Savings | [] | $NA | Delay | [] | NA |

18. Change Impact Review: Indicate the related documents (other than the engineering documents identified on Side 1) that will be affected by the change described in Block 12. Enter the affected document number in Block 19.

| | | | | | |
|---|---|---|---|---|---|
| SDD/DD | [] | Seismic/Stress Analysis | [] | Tank Calibration Manual | [] |
| Functional Design Criteria | [] | Stress/Design Report | [] | Health Physics Procedure | [] |
| Operating Specification | [] | Interface Control Drawing | [] | Spares Multiple Unit Listing | [] |
| Criticality Specification | [] | Calibration Procedure | [] | Test Procedures/Specification | [] |
| Conceptual Design Report | [] | Installation Procedure | [] | Component Index | [] |
| Equipment Spec. | [] | Maintenance Procedure | [] | ASME Coded Item | [] |
| Const. Spec. | [] | Engineering Procedure | [] | Human Factor Consideration | [] |
| Procurement Spec. | [] | Operating Instruction | [] | Computer Software | [] |
| Vendor Information | [] | Operating Procedure | [] | Electric Circuit Schedule | [] |
| OM Manual | [] | Operational Safety Requirement | [] | ICRS Procedure | [] |
| FSAR/SAR | [] | IEFD Drawing | [] | Process Control Manual/Plan | [] |
| Safety Equipment List | [] | Cell Arrangement Drawing | [] | Process Flow Chart | [] |
| Radiation Work Permit | [] | Essential Material Specification | [] | Purchase Requisition | [] |
| Environmental Impact Statement | [] | Fac. Proc. Samp. Schedule | [] | Tickler File | [] |
| Environmental Report | [] | Inspection Plan | [] | | [] |
| Environmental Permit | [] | Inventory Adjustment Request | [] | NONE | [X] |

19. Other Affected Documents: (NOTE: Documents listed below will not be revised by this ECN.) Signatures below indicate that the signing organization has been notified of other affected documents listed below.

| Document Number/Revision | Document Number/Revision | Document Number Revision |
|---|---|---|
| NA | | |

20. Approvals

| Signature | | Date | Signature | | Date |
|---|---|---|---|---|---|
| OPERATIONS AND ENGINEERING | | | ARCHITECT-ENGINEER | | |
| Cog. Eng. | KR Busching | 1-31-95 | PE | | |
| Cog. Mgr. | DB Powell | 1/31/95 | QA | | |
| QA | | | Safety | | |
| Safety | | | Design | | |
| Environ. | | | Environ. | | |
| Other Indep. Review: | J Mitchell | 1/31/95 | Other | | |
| | | | DEPARTMENT OF ENERGY | | |
| | | | Signature or a Control Number that tracks the Approval Signature | | |
| | | | ADDITIONAL | | |

SS EO-40216 FILE COPY Sheet 1 of 4

Rockwell Hanford Operations
Richland, WA 99352

ENGINEERING ORDER

| ITEM DISPOSITION | | EO TYPE | | | |
|---|---|---|---|---|---|
| Rework | X | Release | – | Supersedure | X |
| Replace | – | Release To File | – | Cancellation | – |
| Use As Is | – | Authorize Requirements | – | Obsoletion | – |
| Record Change | – | Change | X | File As Drawing | – |
| — | – | | | | – |

| Impact Level | Change Type | Bldg. | Project No. |
|---|---|---|---|
| — | 2 | 616 | — |

Responsible Engineer: J.H. HUBER Phone: 3-1145

Responsible Organization: PLT. ENG. Phone: 31570 B65221

EO № 41129

Priority: E

Is A Cross Reference To

AUTHORIZATION NO. WX52N

| Index No. | CEI No./Tree | Document No. | Sheet No. | Rev. | Next Used On/Title |
|---|---|---|---|---|---|
| 1000 | — | H-6-1557 | 1 | — | — |

STRUCTURAL ELEVATIONS, DETAILS & SECTIONS

THIS EO SUPERSEDES EO 40216, 12-31-86 IN FULL AND DIFFERS AS FOLLOWS: 1) HAND RAILING CHANGED 2) HEIGHT OF CAGE EXTENDED 3) SAFETY RAILING ON WALL ADDED.

1) ADD "IMPACT LEVEL III" TO DWG.

2) ADD FOLLOWING NOTES TO DWG., APPLICABLE TO THE LADDER STEEL CAGE:
   1. ALL MATERIAL SHALL BE ASTM A 36 C.S. UNLESS OTHERWISE NOTED – IMPACT LEVEL III.
   2. WELD AND INSPECT STRUCTURAL PER AWS D1.1, VT FINAL PASS ALL WELDS.
   3. PREPARE AND PAINT ALL EXPOSED CARBON STEEL SURFACES WITH ONE COAT AMERCOAT #187 PRIMER, AND TWO FINISH COATS OF AMERCOAT #33, FINAL COLOR GREY ON CAGE AND LADDER, FINAL COLOR YELLOW ON ALL HAND RAILINGS AND SAFETY RAILINGS PER MFRS INSTRUCTIONS – OR ENGRG. APPVD. EQUAL.
   4. REMOVE ALL BURRS AND BREAK SHARP EDGES.

| | | |
|---|---|---|
| J.H. HUBER | Prepared By | 1-8-87 Date |
| Tom Frater | Preparer's Immediate Manager | 1-20-87 Date |
| X L.L. Northrop | Checker | 1-14-86 Date |
| X J.H. Huber | Cognizant Design Engineer | 1-8-87 Date |
| X Tom Frater | Cognizant Design Manager | 1-20-87 Date |
| | Quality Assurance | Date |
| X P.E. Nunn | Health, Safety & Environment | 1-16-87 Date |
| | Criticality Engineering & Analysis | Date |
| X K.K. Madge | Process Engineering | 1-16-87 Date |
| X Tom Frater | PLANT ENGINEERING | 1-20-87 Date |
| X J.P. Hampton | WELDING ENGR | 1/16/87 Date |
| X W.H. Eckman | OPERATIONS | 1-16-87 Date |
| X G.S. McPherson | | 1/16/87 Date |

REASONS & ESR No.
ESR-9630
ADDITION OF STEEL CAGE TO OUTDOOR LADDER
- SAFETY ITEM

Work Completed: JUN 05 1990 (2) Date
JUNE 5, 1990

FOR DESIGN USE ONLY
DWG. TBC Yes [X] No [ ]
Design Manager Approval: Tom Frater

RELEASE STAMP
Sta #3 (11)
OFFICIALLY RELEASED
1987 JAN 20 PM 12:55

DISTRIBUTION
J.H. HUBER MO-047
G.T. FRATER "
A.L. JONAS 2750E
J.L. WALKER 2751E
D.P. KERWICK 272AW
J. POORMAN 2750E
R. ROBERTS 272WA
G.S. McPherson 2753E

CCE Richland, WA

BD-6400-093.1 (12-84)

3) REVISE DETAIL G:

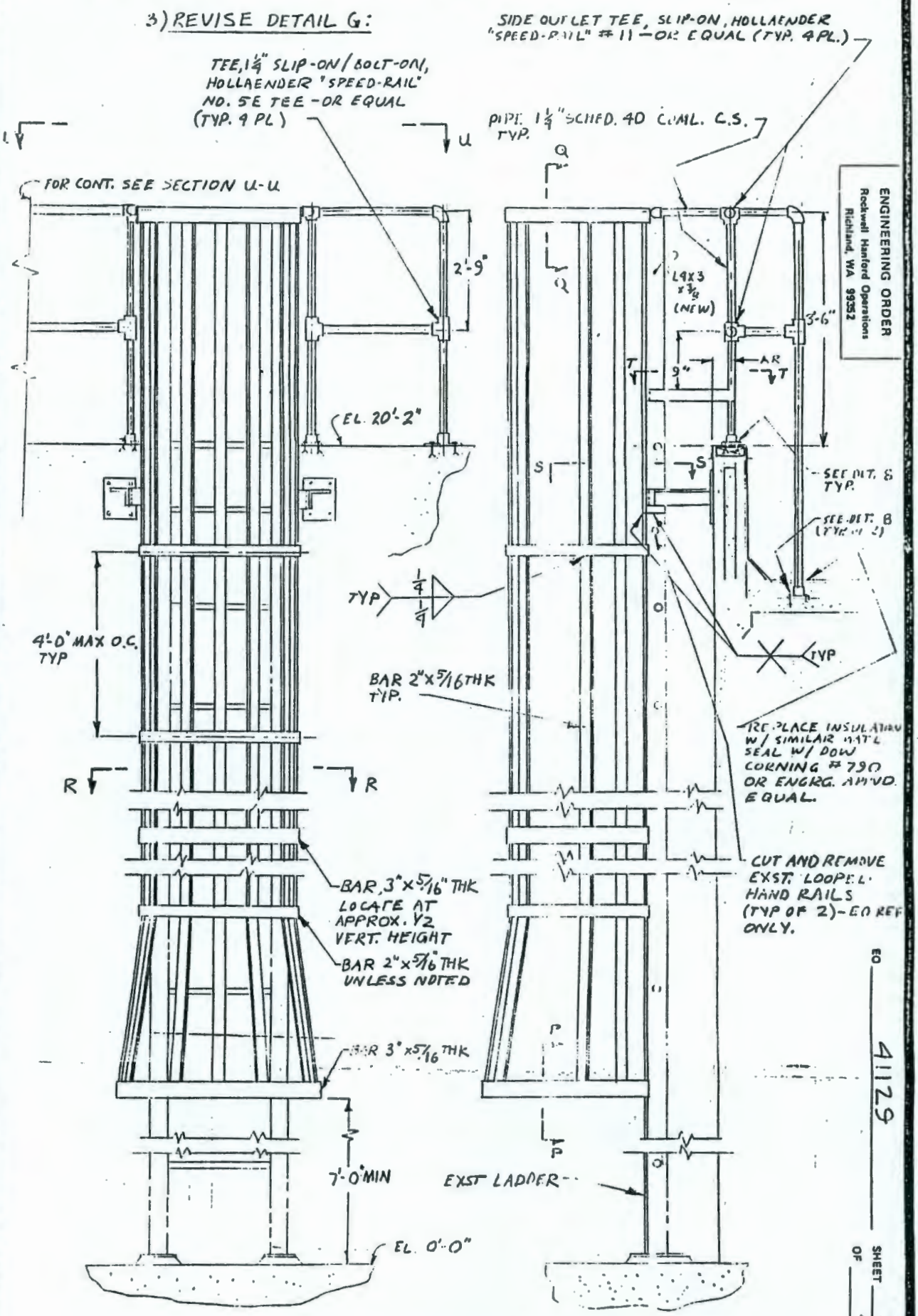


ENGINEERING ORDER
Rockwell Hanford Operations
Richland, WA 99352

EO 41129

SHEET 2 OF 2

STEEL LADDER (G)

SCALE: NONE

11-6-1353

BD-6400-093.3 (11-83)

ENGINEERING ORDER
Rockwell Hanford Operations
Richland, WA 99352

EO 41129 SHEET 3 OF 4

4) ADD SECTION R-R

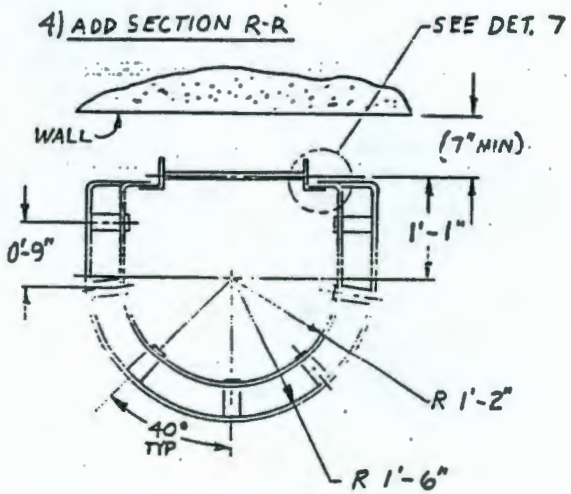


SECTION R-R
SCALE: NONE

ADD SECTION U-U

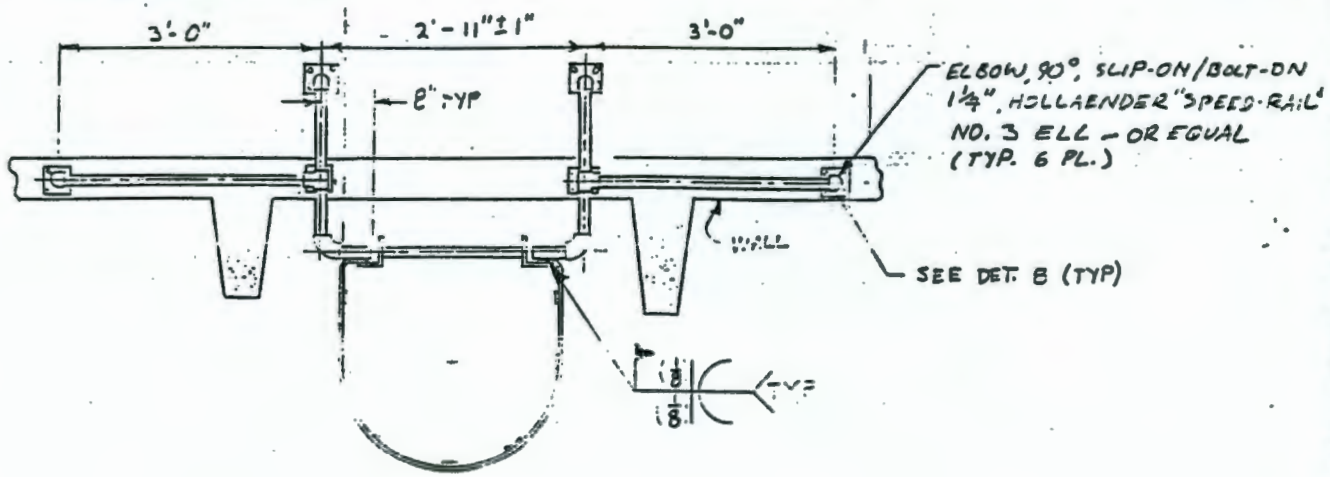


SECTION U-U
SCALE: NONE

6) ADD SECTION P-P:

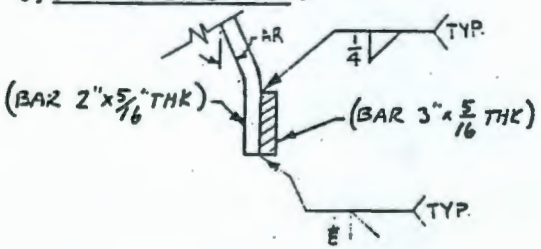


SECTION P-P
SCALE: NONE

7) ADD SECTION Q-Q:

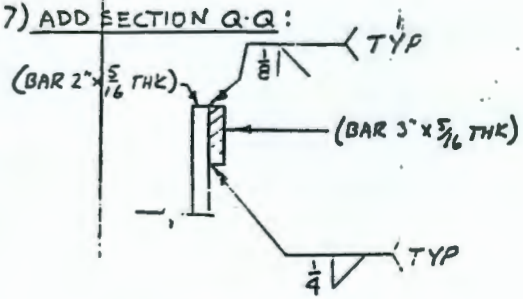


SECTION Q-Q
SCALE: NONE

8) ADD DETAIL 7:

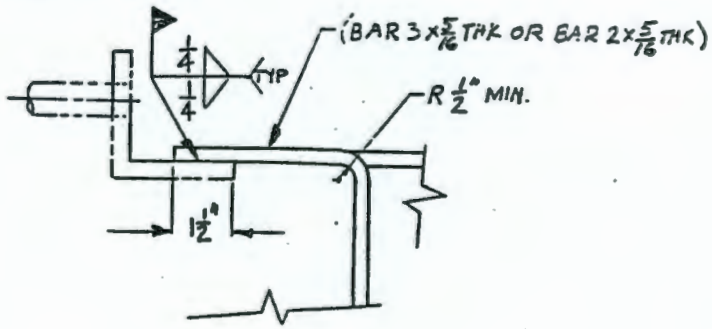


DETAIL 7 (TYP)
SCALE: NONE

**ENGINEERING ORDER**
Rockwell Hanford Operations
Richland, WA 99352

EO 41129 SHEET 4 OF 4

9) ADD SECTION S-S:

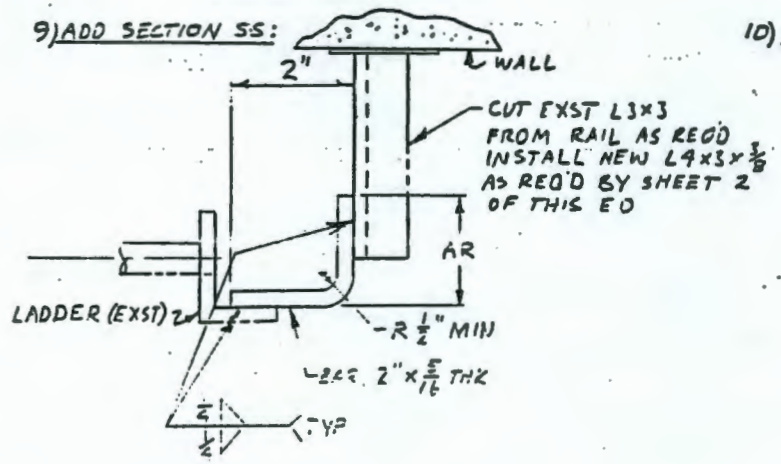


SECTION S-S (TYP.)
SCALE: NONE

10) ADD DETAIL 8:

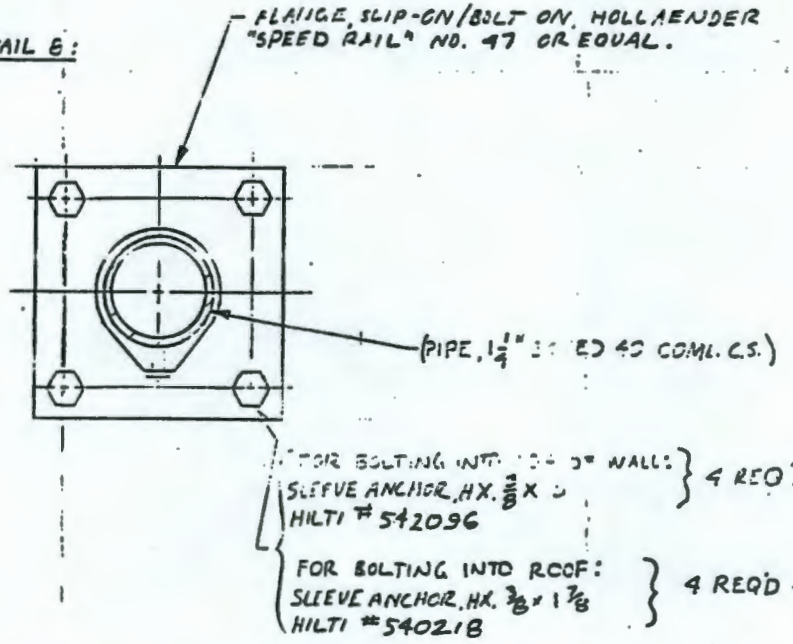


DETAIL 8 (TYP)
SCALE: NONE

11) DELETE SECTION K.

12) REVISE SECTION L:
(TO SHOW POSITION OF BAR, 2"×5/16 THK)

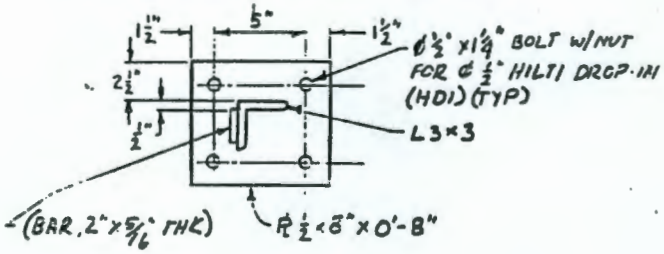


SECTION L
SCALE: NONE

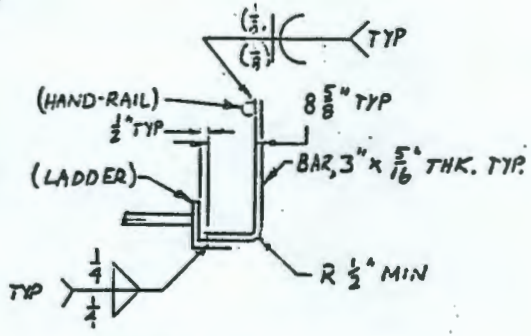


SECTION T-T
SCALE: NONE

BD-6400-093.3 (11-5-83)

IPF #0

# ESSENTIAL
## ENGINEERING CHANGE NOTICE

Page 1 of 4

1. ECN 173594

Proj. ECN

| 2. ECN Category (mark one) | 3. Originator's Name, Organization, MSIN, and Telephone No. | | 4. Date |
|---|---|---|---|
| Supplemental [X]<br>Direct Revision [ ]<br>Change ECN [ ]<br>Temporary [ ]<br>Supersedure [ ]<br>Discovery [ ]<br>Cancel/Void [ ] | D. B. BODILY, 87250, T4-03, 3-2188 | | 5/20/93 |
| | 5. Project Title/No./Work Order No.<br>INSTALL VENT TEST PORTS | 6. Bldg./Sys./Fac. No.<<br>616 | 7. Impact Level 6/9/93<br>~~4~~ 3S |
| | 8. Document Number Affected (include rev. and sheet no.)<br>SEE BLOCK 12 | 9. Related ECN No(s).<br>N/A | 10. Related PO No. |

| 11a. Modification Work | 11b. Work Package Doc. No. | 11c. Complete Installation Work | 11d. Complete Restoration (Temp. ECN only) |
|---|---|---|---|
| [X] Yes (fill out Blk. 11b)<br>[ ] No (NA Blks. 11b, 11c, 11d) | 2X-93-036A | Cog. Engineer Signature & Date | N/A<br>Cog. Engineer Signature & Date |

12. Description of Change

1) ADD DETAILS 12-15 TO DRAWING H-6-1559, SHT. 2, REV. ~~2~~ 3 PER ATTACHED PAGE 3.

DL BODILY PER TELECON MB 09/14/93

2) REVISE VENTILATION PLAN DRAWING H-6-1559, SHT. 1, REV. 3 PER CLOUDED AREAS ON ATTACHED PAGE 4.

| 13a. Justification (mark one) | 13b. Justification Details |
|---|---|
| Criteria Change [ ]<br>Design Improvement [X]<br>Environmental [ ]<br>As-Found [ ]<br>Facilitate Const. [ ]<br>Const. Error/Omission [ ]<br>Design Error/Omission [ ] | THE TEST PORTS WILL MAKE IT EASIER FOR VENT AND BALANCE TO OBTAIN ACCURATE FLOW READINGS. |

14. Distribution (include name, MSIN, and no. of copies)

| | | |
|---|---|---|
| D. B. BODILY | T4-03 | 1 |
| S. TURNER | T4-06 | 1 |
| N. WESTON | T4-03 | 1 (FILE COPY) |
| R.C. BRUNKE | H6-23 | |
| CDWS #4 | R1-29 | |

RELEASE STAMP

OFFICIAL RELEASE BY WHC
DATE SEP 14 1993
Sta. #6

A-7900-013 (11/88)

# ENGINEERING CHANGE NOTICE



1. ECN (use no. from pg. 1): 173594

| 15. Design Verification Required | 16. Cost Impact | | | | 17. Schedule Impact (days) |
|---|---|---|---|---|---|
| | ENGINEERING | | CONSTRUCTION | | |
| ☒ Yes | Additional ☐ | $ N/A | Additional ☐ | $ N/A | Improvement ☐ |
| ☐ No | Savings ☐ | $ | Savings ☐ | $ | Delay ☐ |

18. Change Impact Review: Indicate the related documents (other than the engineering documents identified on Side 1) that will be affected by the change described in Block 12. Enter the affected document number in Block 19.

| | | | | | |
|---|---|---|---|---|---|
| SDD/DD | ☐ | Seismic/Stress Analysis | ☐ | Tank Calibration Manual | ☐ |
| Functional Design Criteria | ☐ | Stress/Design Report | ☐ | Health Physics Procedure | ☐ |
| Operating Specification | ☐ | Interface Control Drawing | ☐ | Spares Multiple Unit Listing | ☐ |
| Criticality Specification | ☐ | Calibration Procedure | ☐ | Test Procedures/Specification | ☐ |
| Conceptual Design Report | ☐ | Installation Procedure | ☐ | Component Index | ☐ |
| Equipment Spec. | ☐ | Maintenance Procedure | ☐ | ASME Coded Item | ☐ |
| Const. Spec. | ☐ | Engineering Procedure | ☐ | Human Factor Consideration | ☐ |
| Procurement Spec. | ☐ | Operating Instruction | ☐ | Computer Software | ☐ |
| Vendor Information | ☐ | Operating Procedure | ☐ | Electric Circuit Schedule | ☐ |
| OM Manual | ☐ | Operational Safety Requirement | ☐ | ICRS Procedure | ☐ |
| FSAR/SAR | ☐ | IEFD Drawing | ☐ | Process Control Manual/Plan | ☐ |
| Safety Equipment List | ☐ | Cell Arrangement Drawing | ☐ | Process Flow Chart | ☐ |
| Radiation Work Permit | ☐ | Essential Material Specification | ☐ | Purchase Requisition | ☐ |
| Environmental Impact Statement | ☐ | Fac. Proc. Samp. Schedule | ☐ | | ☐ |
| Environmental Report | ☐ | Inspection Plan | ☐ | | ☐ |
| Environmental Permit | ☐ N/A | Inventory Adjustment Request | ☐ N/A | | ☐ N/A |

19. Other Affected Documents: (NOTE: Documents listed below will not be revised by this ECN.) Signatures below indicate that the signing organization has been notified of other affected documents listed below.

| Document Number/Revision | Document Number/Revision | Document Number/Revision |
|---|---|---|
| N/A | N/A | N/A |
| | | |
| | | |

20. Approvals

| | Signature | Date | | Signature | Date |
|---|---|---|---|---|---|
| **OPERATIONS AND ENGINEERING** | | | **ARCHITECT-ENGINEER** | | |
| Cog./Project Engineer | D. B. Bodily | 6/3/93 | PE | | |
| Cog./Project Engr. Mgr. | D D Powell | 6/8/93 | QA | | |
| QA | | | Safety | | |
| Safety | R L Martin | 9/13/93 | Design | | |
| Security | | | Other | | |
| Proj.Prog./Dept. Mgr. | | | | | |
| Def. React. Div. | | | | | |
| Chem. Proc. Div. | | | | | |
| Def. Wst. Mgmt. Div. | | | **DEPARTMENT OF ENERGY** | | |
| Adv. React. Dev. Div. | | | | | |
| Proj. Dept. | | | | | |
| Environ. Div. | | | **ADDITIONAL** | | |
| IRM Dept. | | | | | |
| Facility Rep. (Ops) | | | | | |
| Other Ind Dev. | B K Wh | 6/7/93 | | | |
| | | | | | |
| | | | | | |

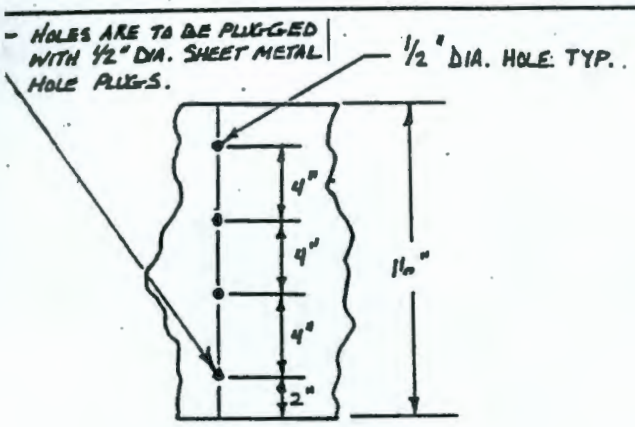


DETAIL 12/1

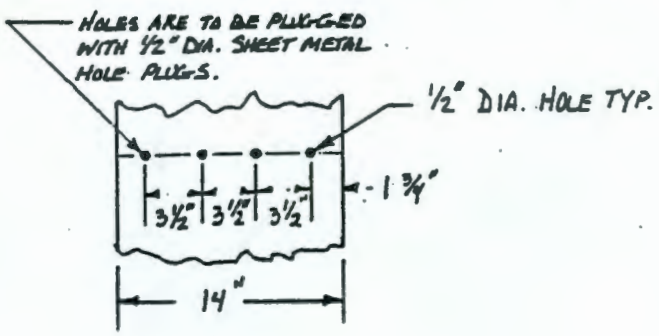


DETAIL 13/1

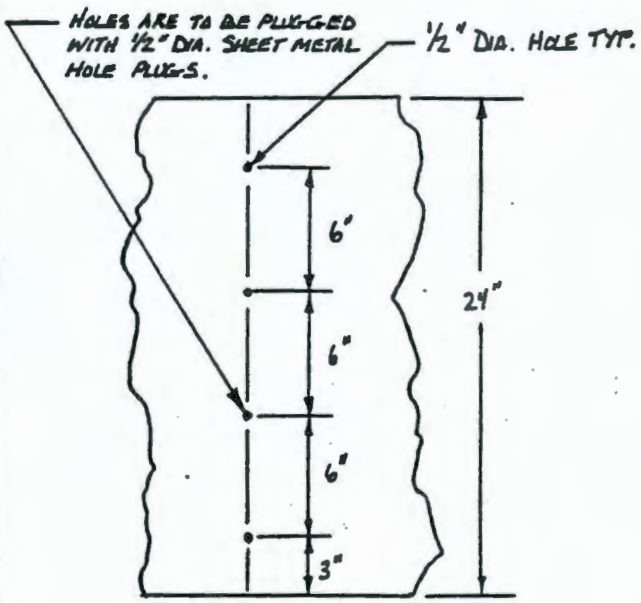


DETAIL 14/1

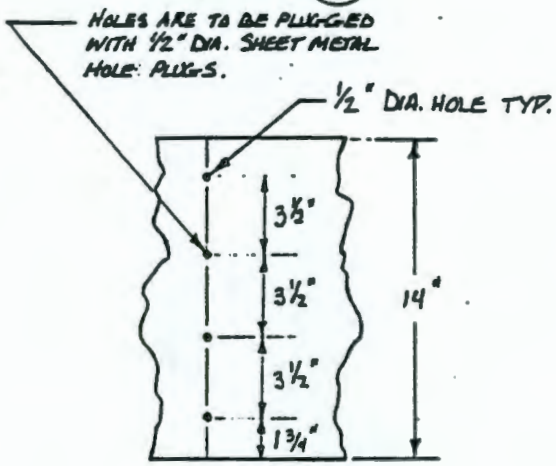


DETAIL 15/1

ENGINEERING CHANGE NOTICE CONTINUATION SHEET

Page 4 of 4

ECN 173594

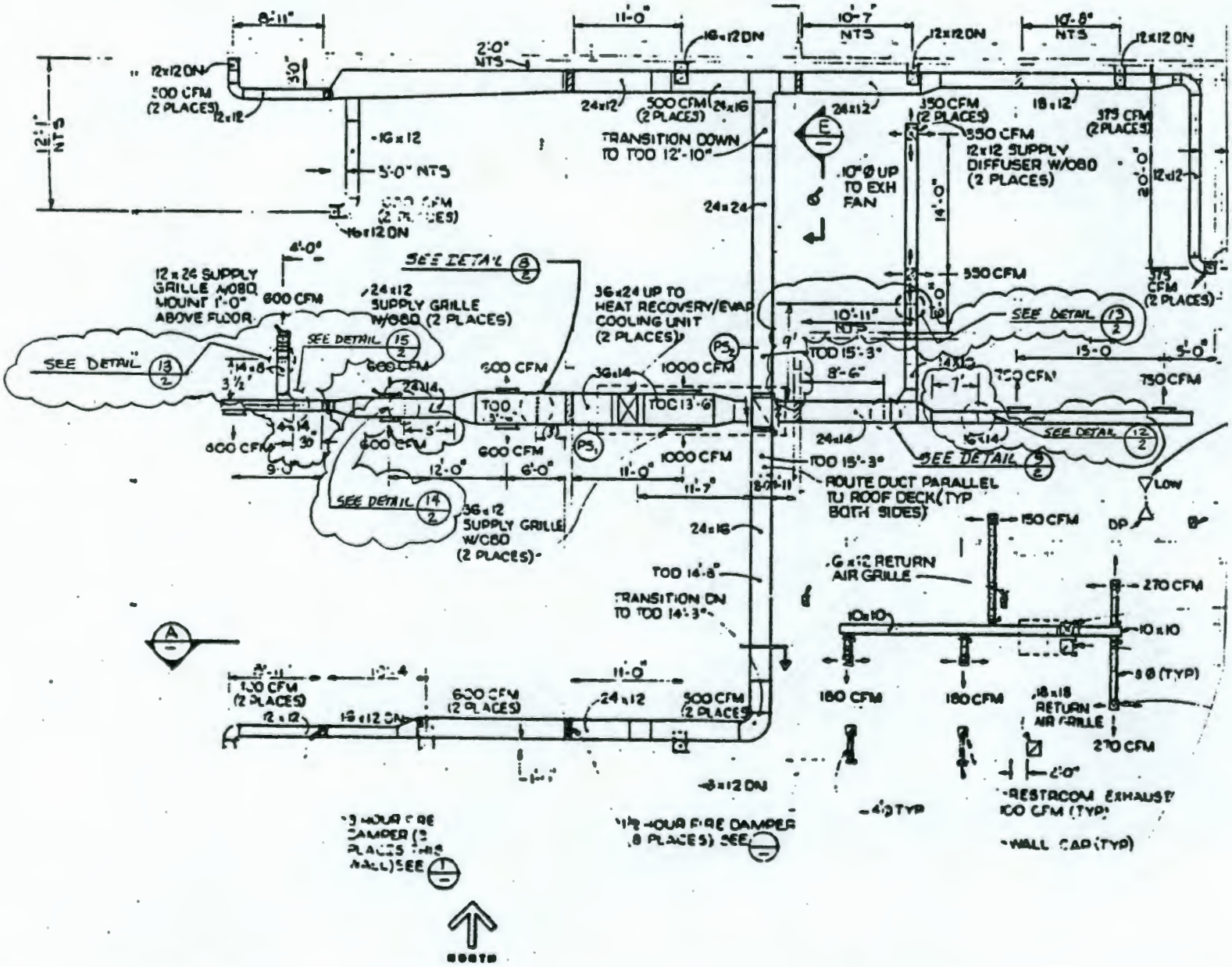

# ENGINEERING CHANGE NOTICE

ESSENTIAL



1. ECN 608525

Proj. ECN

| 2. ECN Category (mark one) | 3. Originator's Name, Organization, MSIN, and Telephone No. | | 4. Date |
|---|---|---|---|
| Supplemental [] | KR Busching, SWMFE, T4-03, 373-2106 | | 08 November, 1994 |
| Direct Revision [] | 5. Project Title/No./Work Order No. | 6. Bldg./Sys./Fac. No. | 7. Approval Designator |
| Change ECN [] | 616 Valve Labeling | 616/Sanitary Water System | NA |
| Temporary [] | | | |
| Standby [] | | | |
| Supersedure [X] | 8. Document Numbers Changed by this ECN (includes sheet no. and rev.) | 9. Related ECN No(s). | 10. Related PO No. |
| Cancel/Void [] | SEE BLOCK 12 | 605641 | NA |

| 11a. Modification Work | 11b. Work Package No. | 11c. Modification Work Complete | 11d. Restored to Original Condition (Temp. or Standby ECN only) |
|---|---|---|---|
| [X] Yes (fill out Blk. 11b) | 2X-94-253 | | NA |
| [] No (NA Blks. 11b, 11c, 11d) | | Cog. Engineer Signature & Date | Cog. Engineer Signature & Date |

12. Description of Change Block 8 Continued: H-6-1559 Sh. 1 Rev. 4 and Sheet 3 Rev. 1

1: THIS ECN IS TO SUPERSEDE ECN #605641 ENTIRELY.

2: Add valve and hose bib numbers to H-6-1559 SH 1 REV 4 as shown in the clouded areas of sheets 6&7 of this ECN.

3: Add valve numbering to details 4, 6 & 7 on drawing H-6-1559 sh 3 rev 1 per clouded areas on pages 3, 4 & 5 of this ECN

: Correct Drawing targets on H-6-1559 sheets 1&3 to accurately reflect proper drawing eferences as indicated in clouded areas on sheets 3, 4, 5 & 7 of this ECN.

5: Add hose bib #5 (HB-05) to H-6-1559 sheet 1 rev 4 as shown on page 7 of thts ECN.

CONTINUED ON PAGE 3 OF THIS ECN

| 13a. Justification (mark one) | | | | | | | |
|---|---|---|---|---|---|---|---|
| | Criteria Change | [X] | Design Improvement | [] | Environmental | [] | |
| As-Found | [] | Facilitate Const. | [] | Const. Error/Omission | [] | Design Error/Omission | [] |

13b. Justification Details

The new labels will correspond to the new Master Equipment List which was developed after ECN 605641 was written and released.

14. Distribution (include name, MSIN, and no. of copies)

KR Busching, SA Griffin (Record Copy) : T4-03, 1 ea.
GS Turner, T4-06, 1: Sta 3, S2-05; STA 4, R1-29; STA 20, T4-00; STA 6, T2-03

RELEASE STAMP

OFFICIAL RELEASE BY WHC 25

DATE NOV 17 1994

STA 6

# ENGINEERING CHANGE NOTICE



1. ECN (use no. from pg. 1) 608525

| 15. Design Verification Required | 16. Cost Impact | | | | 17. Schedule Impact (days) | |
|---|---|---|---|---|---|---|
| | ENGINEERING | | CONSTRUCTION | | | |
| [X] Yes | Additional | [] $ | Additional | [] $ | Improvement | [] |
| [] No | Savings | [] $ | Savings | [] $ | Delay | [] |

18. Change Impact Review: Indicate the related documents (other than the engineering documents identified on Side 1) that will be affected by the change described in Block 12. Enter the affected document number in Block 19.

| | | | | | |
|---|---|---|---|---|---|
| SDD/DD | [] | Seismic/Stress Analysis | [] | Tank Calibration Manual | [] |
| Functional Design Criteria | [] | Stress/Design Report | [] | Health Physics Procedure | [] |
| Operating Specification | [] | Interface Control Drawing | [] | Spares Multiple Unit Listing | [] |
| Criticality Specification | [] | Calibration Procedure | [] | Test Procedures/Specification | [] |
| Conceptual Design Report | [] | Installation Procedure | [] | Component Index | [] |
| Equipment Spec. | [] | Maintenance Procedure | [] | ASME Coded Item | [] |
| Const. Spec. | [] | Engineering Procedure | [] | Human Factor Consideration | [] |
| Procurement Spec. | [] | Operating Instruction | [] | Computer Software | [] |
| Vendor Information | [] | Operating Procedure | [] | Electric Circuit Schedule | [] |
| OM Manual | [] | Operational Safety Requirement | [] | ICRS Procedure | [] |
| FSAR/SAR | [] | IEFD Drawing | [] | Process Control Manual/Plan | [] |
| Safety Equipment List | [] | Cell Arrangement Drawing | [] | Process Flow Chart | [] |
| Radiation Work Permit | [] | Essential Material Specification | [] | Purchase Requisition | [] |
| Environmental Impact Statement | [] | Fac. Proc. Samp. Schedule | [] | Tickler File | [] |
| Environmental Report | [] | Inspection Plan | [] | | [] |
| Environmental Permit | [] N/A | Inventory Adjustment Request | [] NA | | [] N/A |

19. Other Affected Documents: (NOTE: Documents listed below will not be revised by this ECN.) Signatures below indicate that the signing organization has been notified of other affected documents listed below.

| Document Number/Revision | Document Number/Revision | Document Number Revision |
|---|---|---|
| N/A | | |

20. Approvals

| Signature | Date | Signature | Date |
|---|---|---|---|
| OPERATIONS AND ENGINEERING | | ARCHITECT-ENGINEER | |
| Cog. Eng. KR Busching *KR Busching* | 17 Nov 1994 | PE | |
| Cog. Mgr. DB Powell *DB Powell* | 11/17/94 | QA | |
| QA | | Safety | |
| Safety | | Design | |
| Environ. | | Environ. | |
| Other Independent Review *K.M. McDonald* | 11/17/94 | Other | |
| | | | |
| | | | |
| | | DEPARTMENT OF ENERGY | |
| | | Signature or a Control Number that tracks the Approval Signature | |
| | | ADDITIONAL | |
| | | | |
| | | | |
| | | | |

5: Add label schedule as shown on page 8 of this ECN to H-6-1559 sh 1 rev 4 and add note to H-6-1559 sh 3 rev 1 to refer to sheet 1 for the label schedule.

FROM DRAWING H-6-1559 SHEET 3

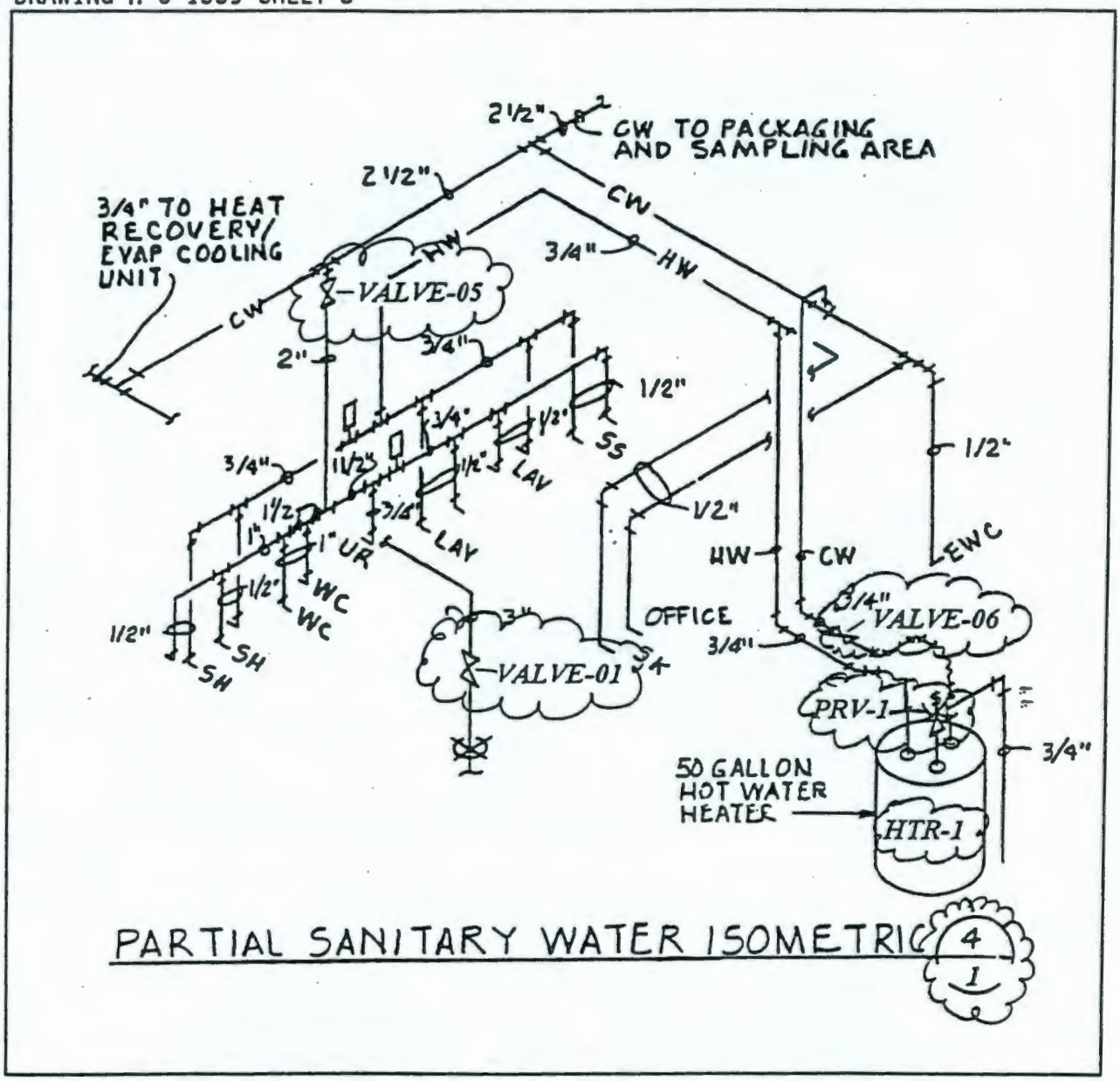

FROM DRAWING H-6-1559 SHEET 3

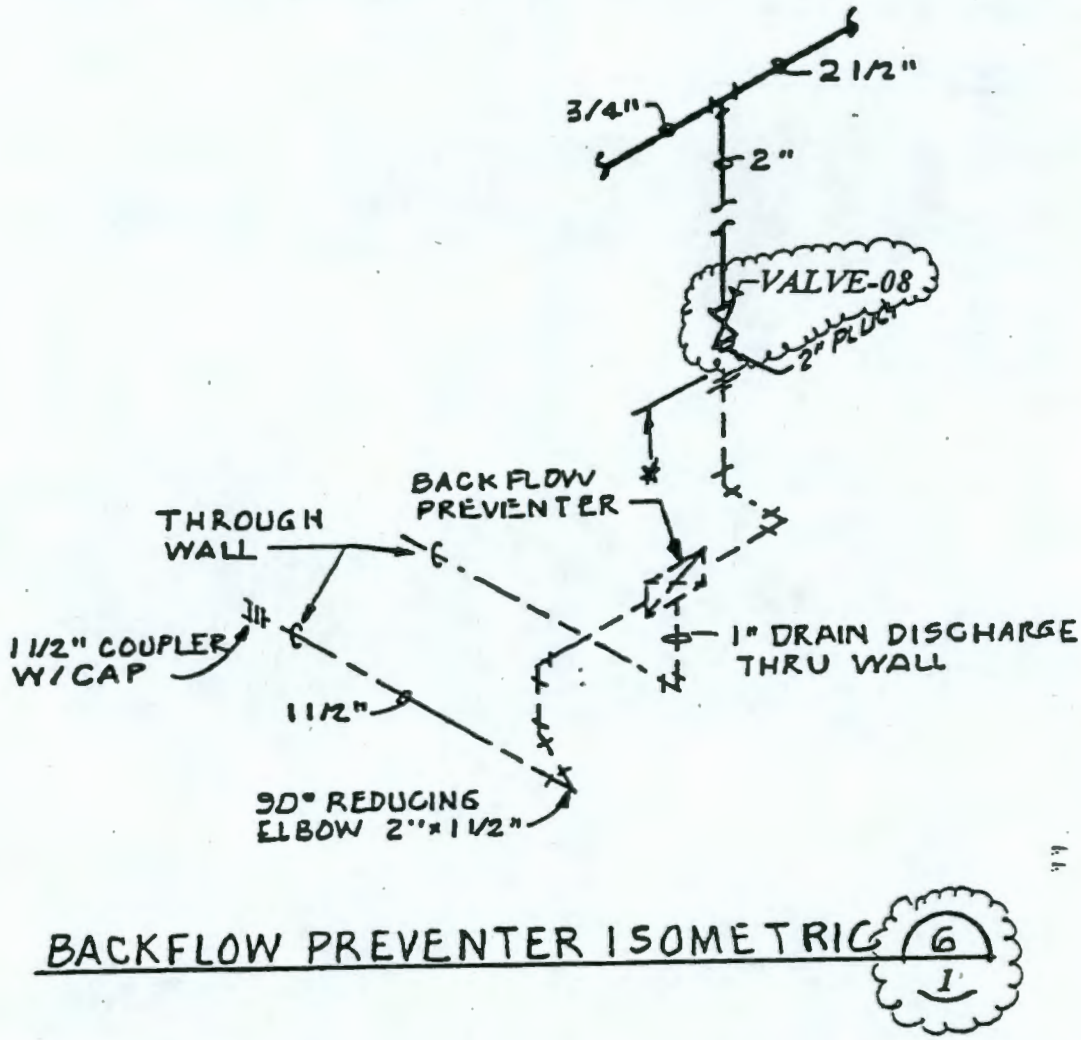


BACKFLOW PREVENTER ISOMETRIC 6/1

FROM DRAWING H-6-1559 SHEET 3

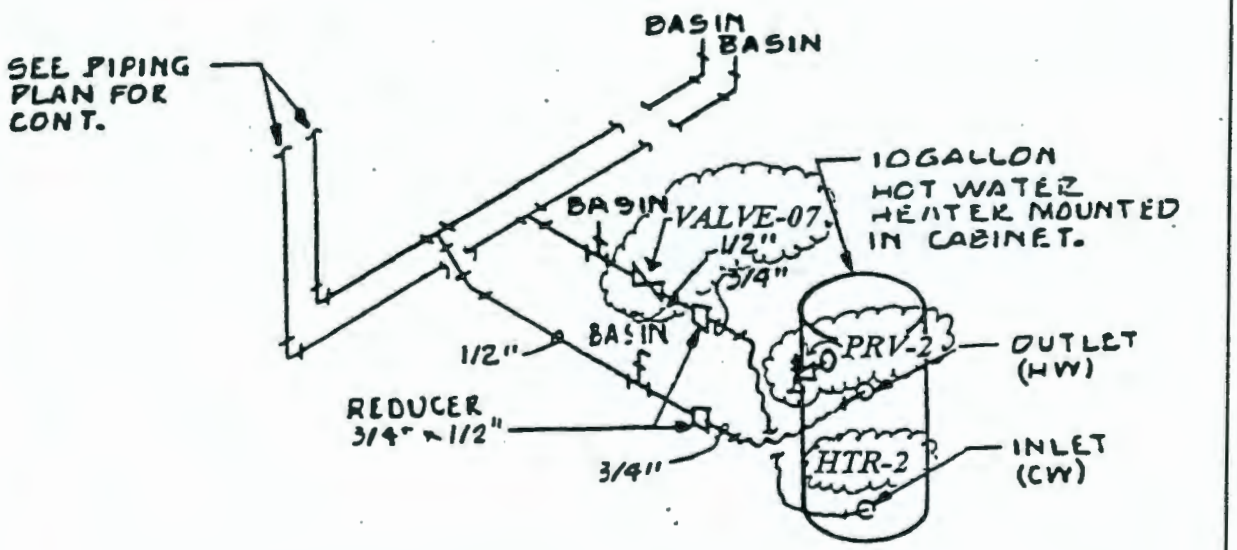


PACKAGING & SAMPLING SW ISOMETRIC 7/1

FROM DRAWING H-6-1559 SHEET 1

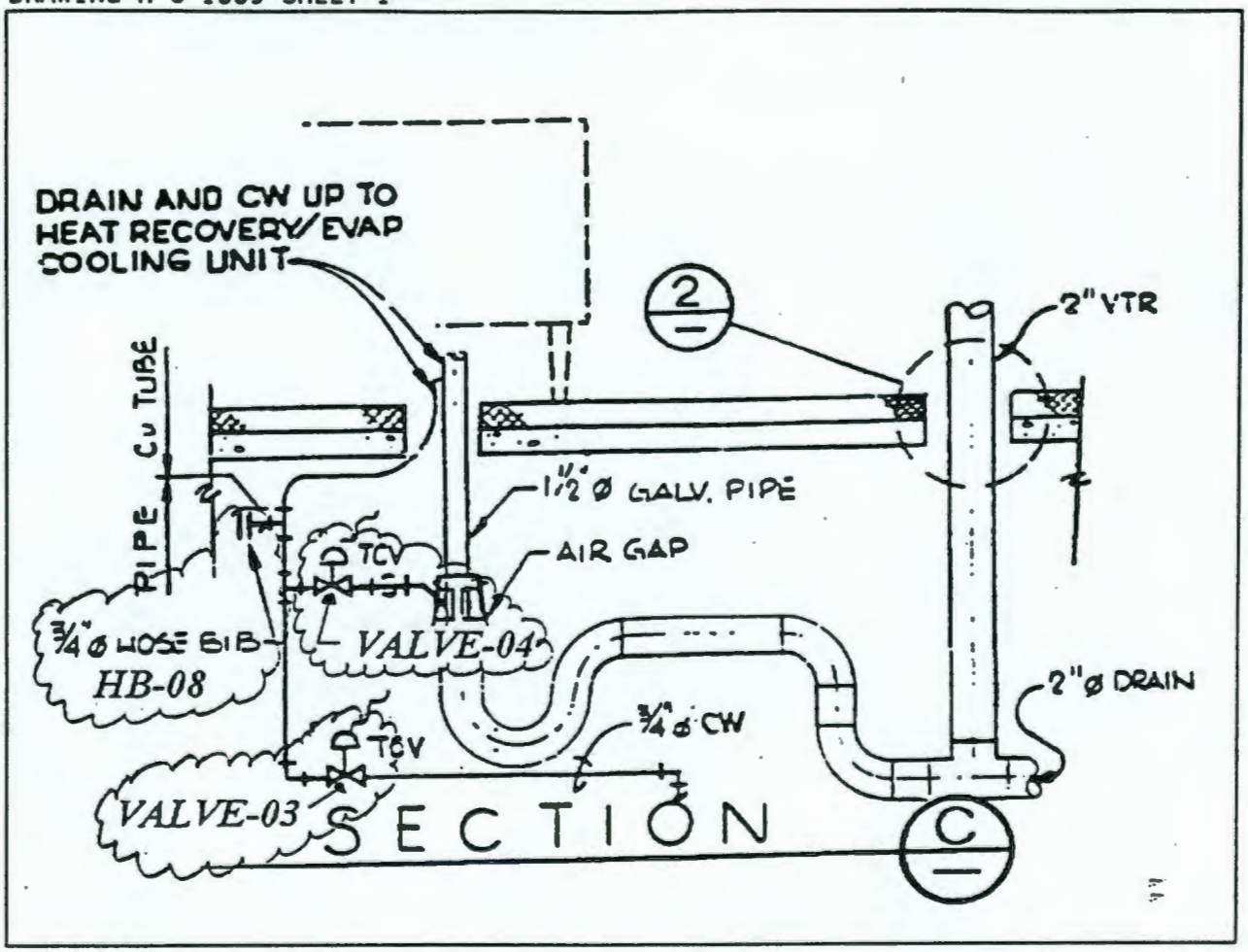

ECN 608525

Date 11/08/94

Page 7 of 8

# ENGINEERING CHANGE NOTICE CONTINUATION SHEET

FROM H-6-1559 SHEET 1

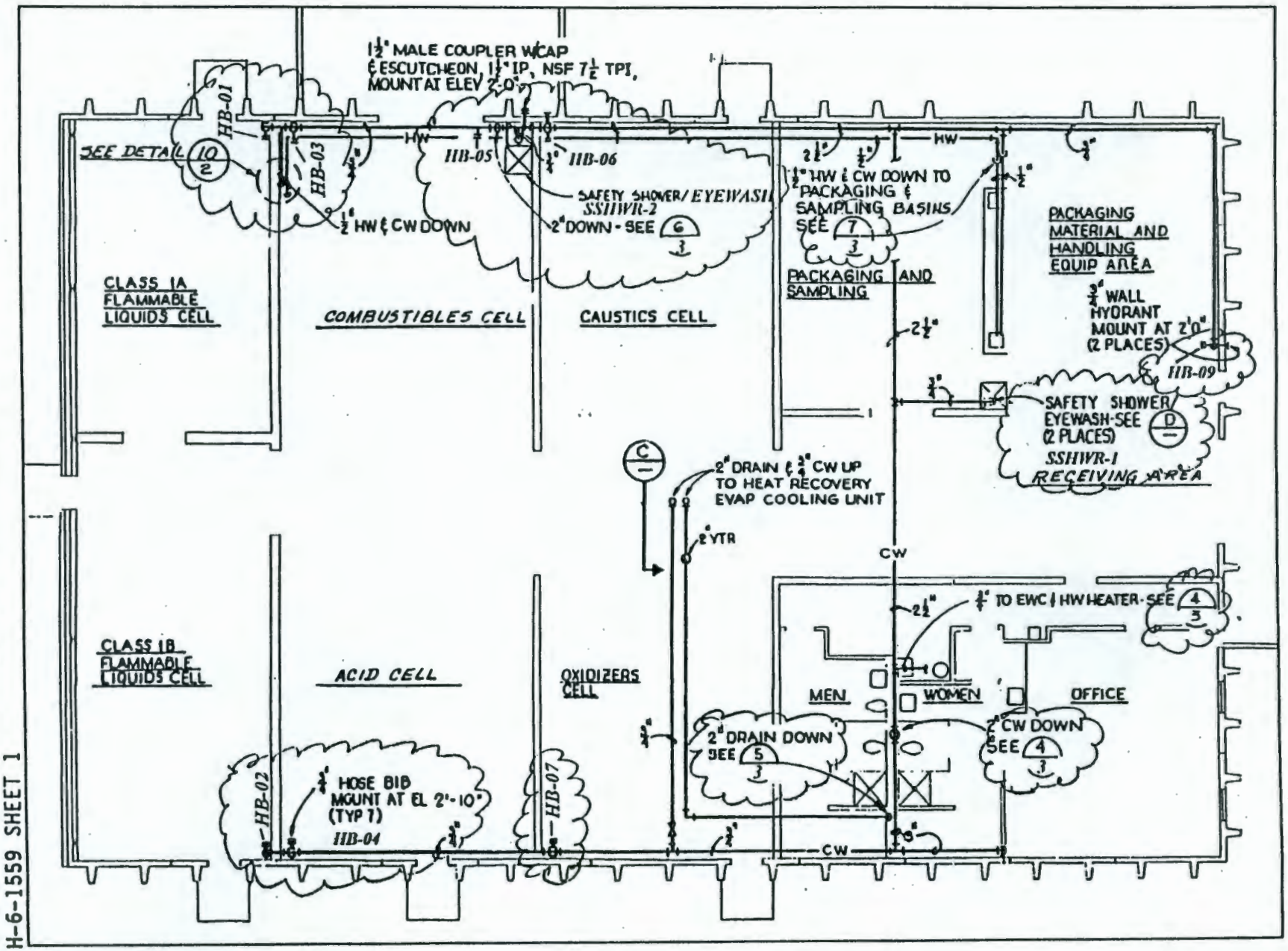


A-7900-013-4 (04/94) GEF094

| DRAWING ITEM | COMPONENT NUMBER / LABEL | ITEM DESCRIPTION |
|---|---|---|
| | | |
| VALVE-01 | WATER-SW-VALVE-01 | 3" GATE VALVE |
| VALVE-02 | WATER-SW-VALVE-02 | 3/4" GATE VALVE |
| VALVE-03 | WATER-SW-VALVE-03 | 3/4" TEMPERATURE CONTROL VALVE |
| VALVE-04 | WATER-SW-VALVE-04 | 3/4" TEMPERATURE CONTROL VALVE |
| VALVE-05 | WATER-SW-VALVE-05 | 2" GATE VALVE |
| VALVE-06 | WATER-SW-VALVE-06 | 3/4" GATE VLAVE |
| VALVE-07 | WATER-SW-VALVE-07 | 1/2" GATE VALVE |
| VALVE-08 | WATER-SW-VALVE-08 | 2" GATE VALVE |
| PRV-1 | WATER-SW-PRV-1 | PRESSURE RELIEF VALVE |
| PRV-2 | WATER-SW-PRV-2 | PRESSURE RELIEF VALVE |
| HTR-1 | WATER-SW-HTR-1 | 50 GALLON HOT WATER HEATER |
| HTR-2 | WATER-SW-HTR-2 | 10 GALLON HOT WATER HEATER |
| HB-01 | WATER-SW-HB-01 | 3/4" HOSE BIB |
| HB-02 | WATER-SW-HB-02 | 3/4" HOSE BIB |
| HB-03 | WATER-SW-HB-03 | 3/4" HOSE BIB |
| HB-04 | WATER-SW-HB-04 | 3/4" HOSE BIB |
| HB-05 | WATER-SW-HB-05 | 3/4" HOSE BIB |
| HB-06 | WATER-SW-HB-06 | 3/4" HOSE BIB |
| HB-07 | WATER-SW-HB-07 | 3/4" HOSE BIB |
| HB-08 | WATER-SW-HB-08 | 3/4" HOSE BIB |
| HB-09 | WATER-SW-HB-09 | 3/4" HOSE BIB |
| SSHWR-1 | WATER-SW-SSHWR-1 | SAFETY SHOWER/EYEWASH STATION |
| SSHWR-2 | WATER-SW-SSHWR-2 | SAFETY SHOWER/EYEWASH STATION |
| | | |