START

9513336.1320

15

0010155

Mr. John Grantham
State of Washington
Department of Ecology
Nuclear & Mixed Waste Program
P. O. Box 47600
Olympia, WA 98504-7600

FLUOR DANIEL, INC.

Date: September 16, 1993

Reference: Hanford Waste Vitrification Plant
DOE Contract DE-AC06-86RL10838
Fluor Contract 8457

Transmittal No.: WDOE-624

Dear Mr. Grantham:

TRANSMITTAL

We enclose 2 copy of the items listed below. These are issued per US-DOE request.

Response due to Fluor: N/A
Responds to: E350 PACKAGE

NUMBER	REV	DATE	TITLE
DCN NUMBER - 0060	1	09/16/93	DCN TITLE - TBD/HOLD ON CANISTER STORAGE TUBE LENGTH AND TUBE BASE ASSEMBLY "APPROVED FOR CONSTRUCTION"

SEP 1993 RECEIVED EDMC

Distribution:
Reference: FRP-1193, FUP-[redacted] 637
R. L. Long: DOE-RL, w/0
TWP/AME Corresp Cntrl Cntr, MSIN A5-10 (E350 PACKAGE), w/0
P. Felise, WHC-RL (MSIN G6-06), w/1
Environmental Data Management Center (MSIN H6-08), w/1
D. Duncan, US EPA, Region X, w/0

Very truly yours,

Rosalie Cadenas for

R. S. Poulter
Project Director

RSP:RH:lh

9513336.1321

FLUOR DANIEL

US DEPARTMENT OF ENERGY
HANFORD WASTE VITRIFICATION PLANT

DESIGN CHANGE NOTICE

DCN - 0060	REV 1	PAGE 1 OF 12
DCN TITLE: TBD/Hold on Canister Storage Tube Length and Tube Base Assembly		DATE INITIATED: 8-27-93
		PACKAGE NO.: E350

SECTION 1: DESCRIPTION OF CHANGE

DCN-0060 REV 0: (Previous revision)

This DCN is to place TBD/Hold HWVP-FD-352 on canister storage tube length and tube base assembly.

NOTE: The revised designs will be issued via DCN-0060, Rev. 1.

DCN-0060 REV 1: (Current revision)

- Release TBD/Hold HWVP-FD-352.
- Supersede DCN-0060 Rev. 0.
- Replace designs of standard/overpack tube base assemblies.
- Revise length dimensions of standard/overpack storage tube assemblies.

FOR LIST OF AFFECTED DOCUMENTS, SEE SECTIONS 6 AND 7.

CAUSE OF CHANGE:

- ☐ Field Change Request
- ☐ Supplier Disposition
- ☐ Deficiency Report
- ☒ Design Development
- ☐ Change Request
- ☐ Other _____

Initiating Document(s)

SECTION 2: EVALUATION

ARE ANY OF THE FOLLOWING AFFECTED?			IF "YES", REVIEW REQUIRED BY:	REVIEWER COMMENTS/SIGNATURE/DATE
WAPA	☑ NO	☐ YES		
QUALITY LEVEL I	☐ NO	☒ YES	R.D. BROMM	No Comments RDB 9/16/93
SAFETY CLASS 1 OR 2	☐ NO	☒ YES	R.D. BROMM	No Comments RDB 9/16/93
SYSTEMS ANALYSES	☐ NO	☒ YES	J.B. REISDORF	No Comments JBR 9/16/93
MULTI-DISCIPLINE	☑ NO	☐ YES		

DCN Evaluated by: Systems D. Taylor 9/16/93 ADM N.H. 9/16/93 Others _____

SECTION 3: APPROVED FOR CONSTRUCTION

R. Hulskamp 9-16-93
Originator Date

Edward Jacobs 9-16-93
Project/Resident Engineer Date

SECTION 4: CONCURRENCE

Project Management _____ Date

Systems _____ Date

Independent Safety _____ Date

Quality Assurance _____ Date

Configuration Management _____ Date

SECTION 5: RELEASED FOR CONSTRUCTION

PE STAMP REQUIRED? ☐ NO ☒ YES

WHC _____ Date

UCAT _____ Date

DOE _____ Date

COMMENTS:

9513336.1322

FLUOR DANIEL US DEPARTMENT OF ENERGY HANFORD WASTE VITRIFICATION PLANT **DESIGN CHANGE NOTICE**	DCN – 0060	REV 1	DISCIPLINE Mechanical	PKG. NO. E350	PAGE 2
	PREPARED BY: M. Weimer		Date: 9/13/93		
	DISCIPLINE ENGINEER: R. Hulskamp		Date: 9/14/93		

SECTION 6: CONSTRUCTION DOCUMENTS AFFECTED

DOCUMENT NUMBER	SHT/ PAGE	REV NO	DOCUMENT NAME	INCLD Y/N	DESCRIPTION OF CHANGE
DCN-0060 REV 0:	(Previous revision)				
H-2-120395	1	0	Standard/Overpack Tube Assembly	Y	Place hold on storage tube length. See Page 3.
H-2-120396	1	0	Standard/Overpack Tube Base Assembly	Y	Place hold on base assembly. See Page 4.
DCN-0060 REV 1:	(Current revision)				
H-2-120395	1	1	Standard/Overpack Tube Assemblies	Y	See Page 3A & 3B
H-2-120396	1	1	Standard/Overpack Tube Base Assemblies	Y	See Page 4A & 4B
H-2-120397	1	1	Standard/Overpack Storage Assemblies	Y	See Page 5 & 6
H-2-120143	1	1	Standard/Overpack Tube Installation	Y	See Page 7 & 8
H-2-120143	2	1	Standard/Overpack Tube Installation Details	Y	See Page 9
H-2-120143	3	1	Standard/Overpack Tube Installation Details	Y	See Page 10
Spec. Section E350-13099	5	1	Canister/Overpack Storage Tube Installation	Y	See Page 11
Spec. Section E350-13099	6	1	Canister/Overpack Storage Tube Installation	Y	See Page 12
DCN-0098	All	0	Tube Base Weld Stud and Nut	N	See DCN for concurrent revision of related items.

SECTION 7: NON-CONSTRUCTION DOCUMENTS AFFECTED

This section references affected items such as P&IDs or calculations/analyses, but they are generally not included in DCN package.

DOCUMENT NUMBER	SHT/ PAGE	REV NO	DOCUMENT NAME	DESCRIPTION OF CHANGE
None				

9513336.1323

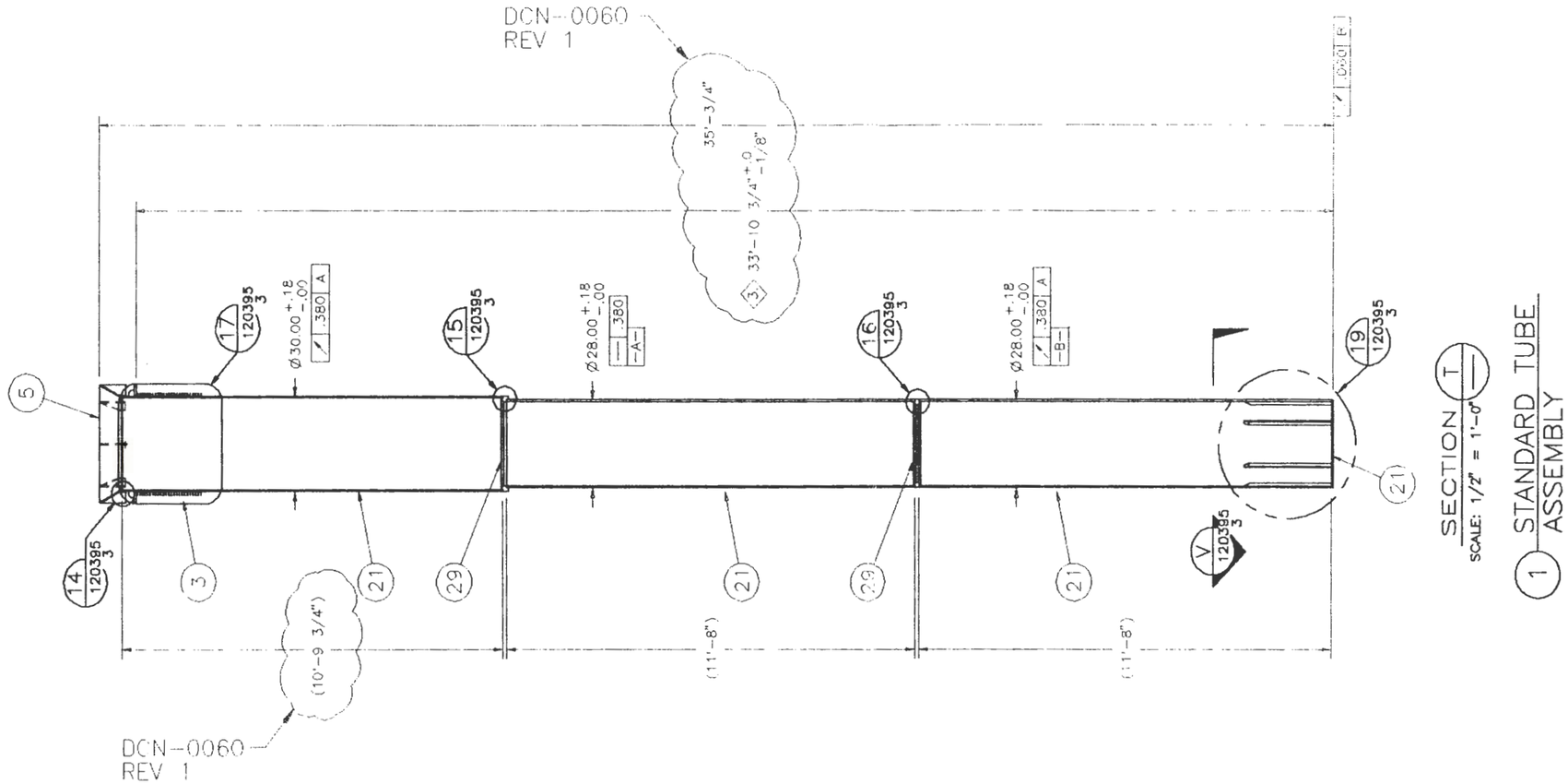

SECTION T
SCALE: 1/2" = 1'-0"

1 STANDARD TUBE ASSEMBLY

FLUOR DANIEL	U.S. DEPARTMENT OF ENERGY HANFORD WASTE VITRIFICATION PLANT	DESIGN CHANGE NOTICE
DESCRIPTION OF CHANGE: MODIFY STANDARD/OVERPACK CANISTER STORAGE TUBES		BASE DOC. NO. H-2-120395 SHT/PG. 1 REV. 1 CR NO. N/A DISCIPLINE: MECHANICAL
PREPARED BY:	DATE: 9-14-93	DCN-0060 / REV. 1 / PAGE 3A
DISCIPLINE ENGINEER: R. Hulskamp	DATE: 9-16-93	

ACAD

9513336.1324

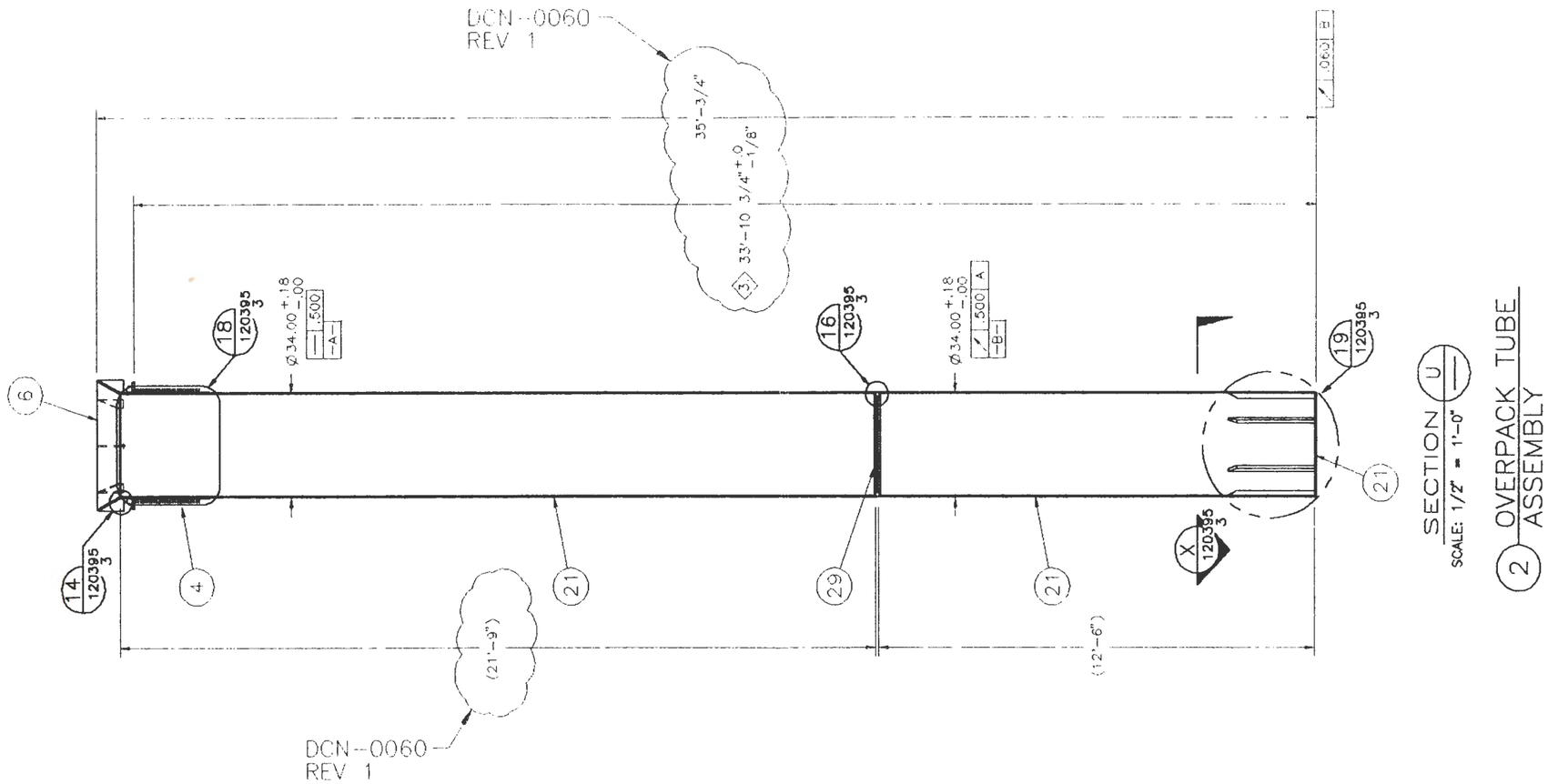

SECTION U
SCALE: 1/2" = 1'-0"

2 OVERPACK TUBE ASSEMBLY

FLUOR DANIEL	U.S. DEPARTMENT OF ENERGY HANFORD WASTE VITRIFICATION PLANT	DESIGN CHANGE NOTICE
DESCRIPTION OF CHANGE: MODIFY STANDARD/OVERPACK CANISTER STORAGE TUBES		BASE DOC. NO. H-2-120395 SHT/PG. 1 REV. 1 CR NO. N/A DISCIPLINE: MECHANICAL
PREPARED BY:	DATE: 9-14-93	DCN-0060 / REV. 1 / PAGE 3B
DISCIPLINE ENGINEER: R. Hulskamp	DATE: 9-16-93	

ACAD

9513336.1325

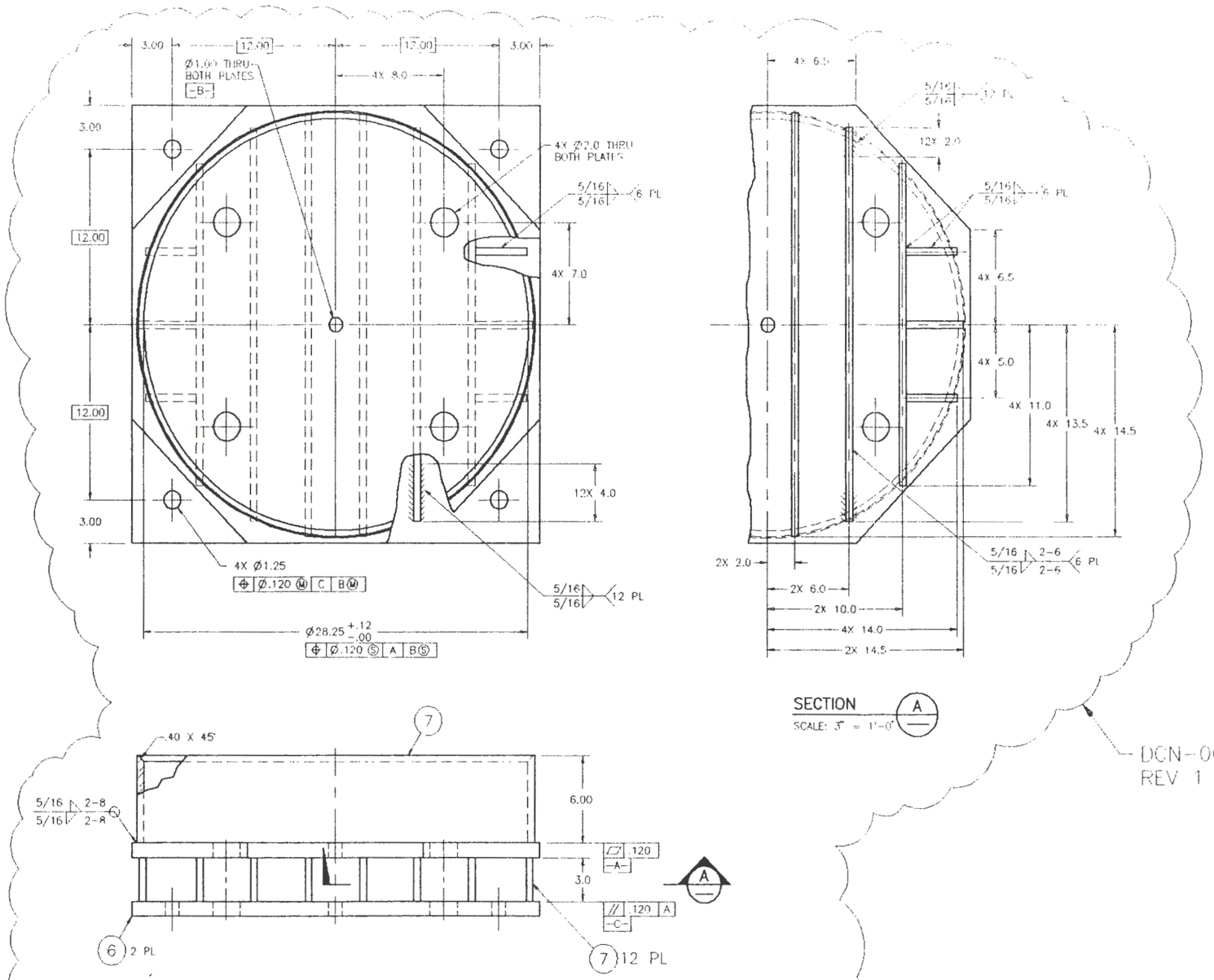

SECTION A
SCALE: 3" = 1'-0"

DCN-0060
REV 1

DCN-0060
REV 1

1 STANDARD TUBE BASE ASSEMBLY

SCALE: 3" = 1'-0"

PARTS/MATERIAL LIST

QTY -020	QTY -010	PART/DASH NUMBER	NOMENCLATURE/DESCRIPTION	MATERIAL/REFERENCE	SHEET	ITEM NO.
		010	STANDARD TUBE BASE ASSEMBLY			1
		020	OVERPACK TUBE BASE ASSEMBLY			2
						3
						4
						5
AR	AR		PLATE, 1 THK	ASTM-A588 GRADE-A		6
AR	AR		PLATE, 1/2-THK	ASTM-A240 TYPE 1		7

FLUOR DANIEL

U.S. DEPARTMENT OF ENERGY
HANFORD WASTE VITRIFICATION PLANT

DESIGN CHANGE NOTICE

DESCRIPTION OF CHANGE:

MODIFY STANDARD/OVERPACK TUBE BASE ASSEMBLY

BASE DOC. NO. H-2-120396
SHT/PG. 1 REV. 1
CR NO. N/A
DISCIPLINE: MECHANICAL

PREPARED BY: [signature] DATE: 9-14-93
DISCIPLINE ENGINEER: R. Hulskamp DATE: 9-16-93

DCN-0060	REV. 1	PAGE 4A

ACAD

9513336.1326

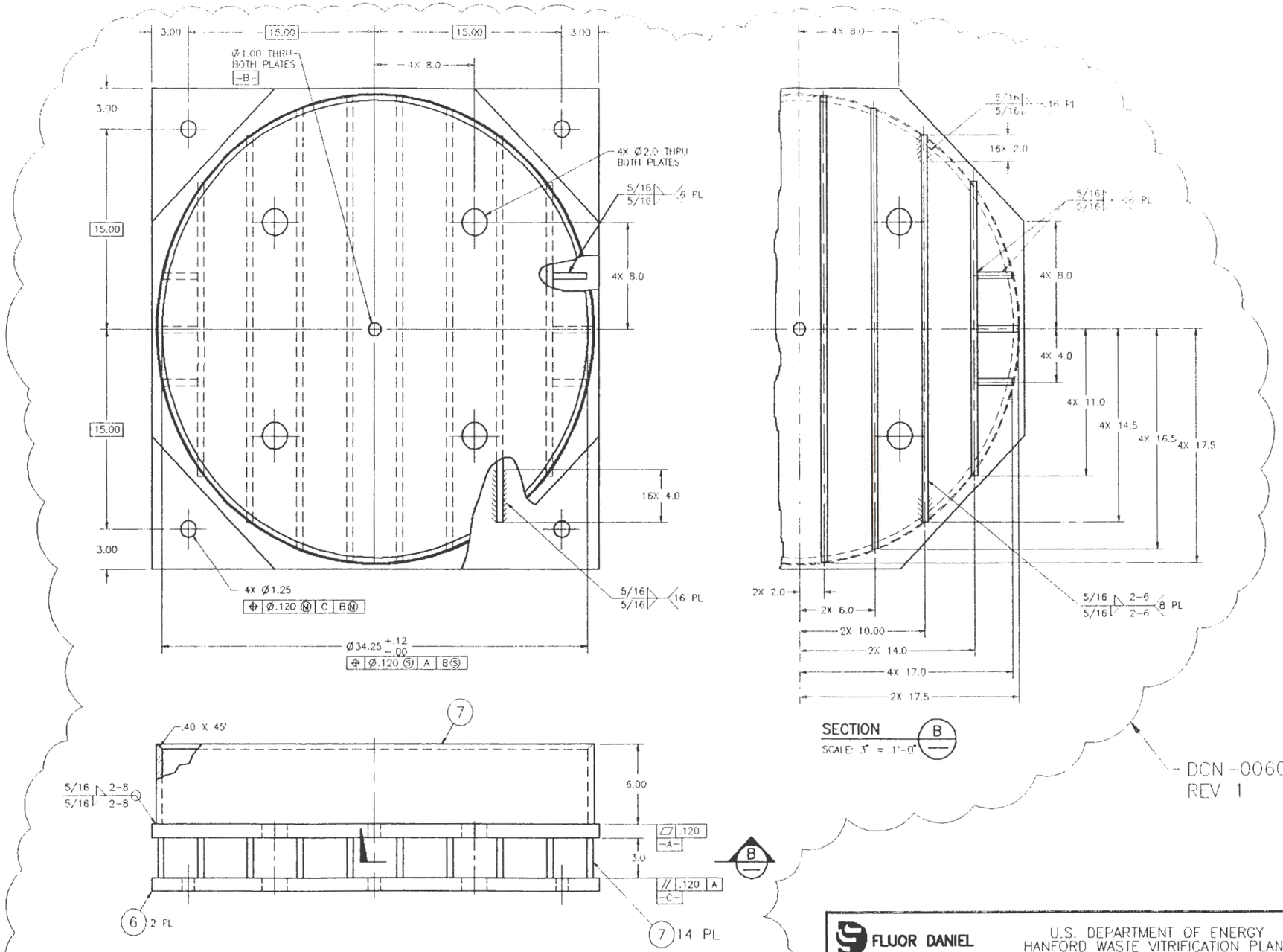

2 OVERPACK TUBE BASE ASSEMBLY

SCALE: 3" = 1'-0"

FLUOR DANIEL	U.S. DEPARTMENT OF ENERGY HANFORD WASTE VITRIFICATION PLANT	DESIGN CHANGE NOTICE
DESCRIPTION OF CHANGE: MODIFY STANDARD/OVERPACK TUBE BASE ASSEMBLY		BASE DOC. NO. H-2-120396 SHT/PG. 1 REV. 1 CR NO. N/A DISCIPLINE: MECHANICAL
PREPARED BY:	DATE: 9-14-93	DCN-0060 REV. 1 PAGE 4B
DISCIPLINE ENGINEER: R. Kulskamp	DATE: 9-16-93	

ACAD

9513336.1327

							28
							29
							30
	4	4		THREADED WELD STUD, Ø1-8 UNC-2A X 5-1/2 LG (1)	ASTM-A108 TYPE 1		31
	8	8		NUT, 1-8 UNC-2B HVY HEX	ASTM-A563 GRADE-C3 CLASS-A		32
9				PIPE EMBED, 3" SCH 80	ASTM-A53 TYPE-F		33
9				ANGLE, 3 X 3 X 3/8 THK X 6 LG	ASTM-A242 TYPE-1 GROUP-1		34
AR				PIPE, 3/4" SCH 40S	ASTM-A312 GRADE-304L		35
27				CAP, BUTTWELD 3/4" SCH 40S	ASTM-A403 GRADE-WP304L		36

DCN-0098

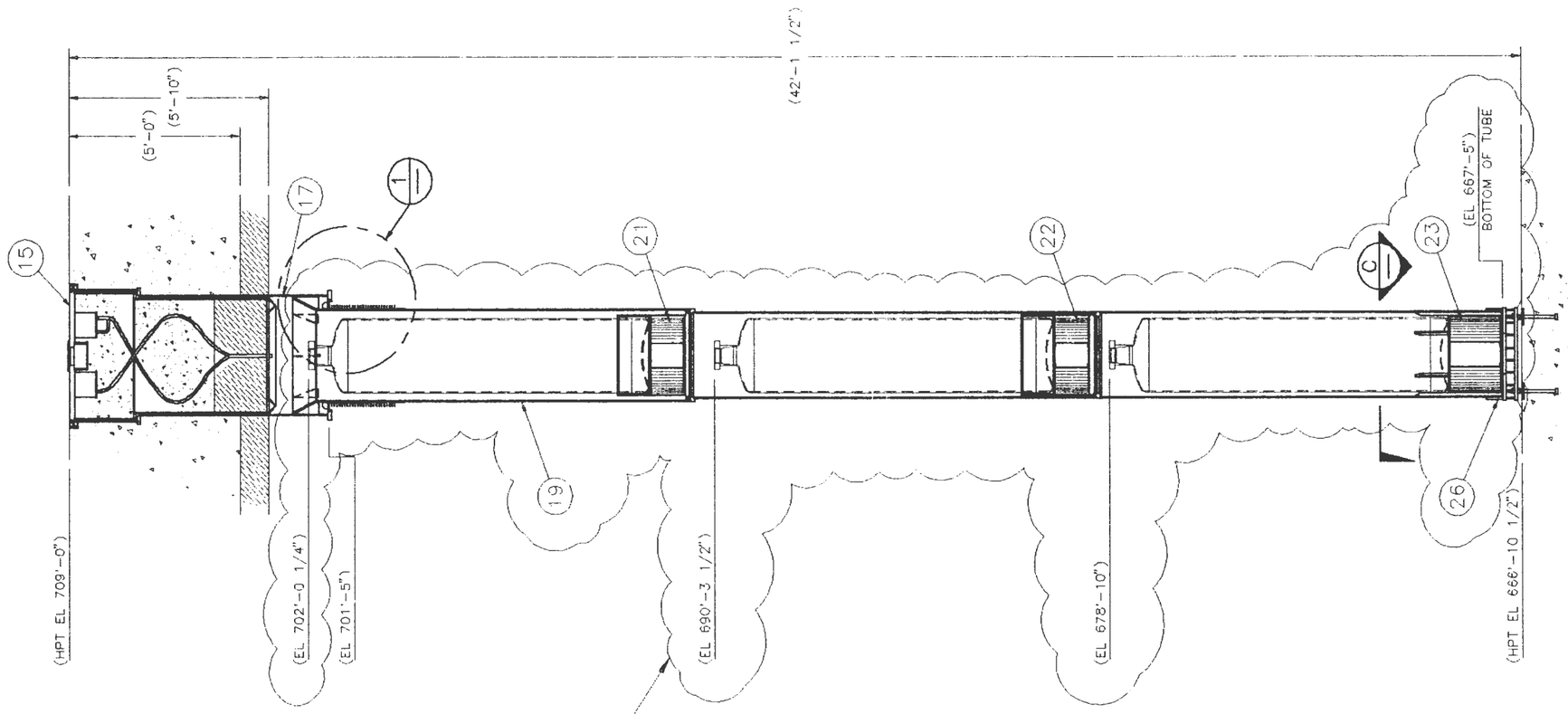

SECTION A
SCALE: 1/2"=1'-0"

1 STANDARD CANISTER STORAGE TUBE ASSEMBLY (660 REQD)

DCN-0060
REV 1

FLUOR DANIEL	U.S. DEPARTMENT OF ENERGY HANFORD WASTE VITRIFICATION PLANT	DESIGN CHANGE NOTICE
DESCRIPTION OF CHANGE: CHANGE STANDARD CANISTER STORAGE TUBE ASSEMBLY AND TUBE BASE ASSEMBLY		BASE DOC. NO. H-2-120397 SHT/PG. 1 REV. 1 CR NO. N/A DISCIPLINE: MECHANICAL
PREPARED BY: John H. Sack	DATE: 9-14-93	DCN-0060 REV. 1 PAGE 5
DISCIPLINE ENGINEER: R. Hulskamp	DATE: 9-16-93	

ACAD

9513336.1328

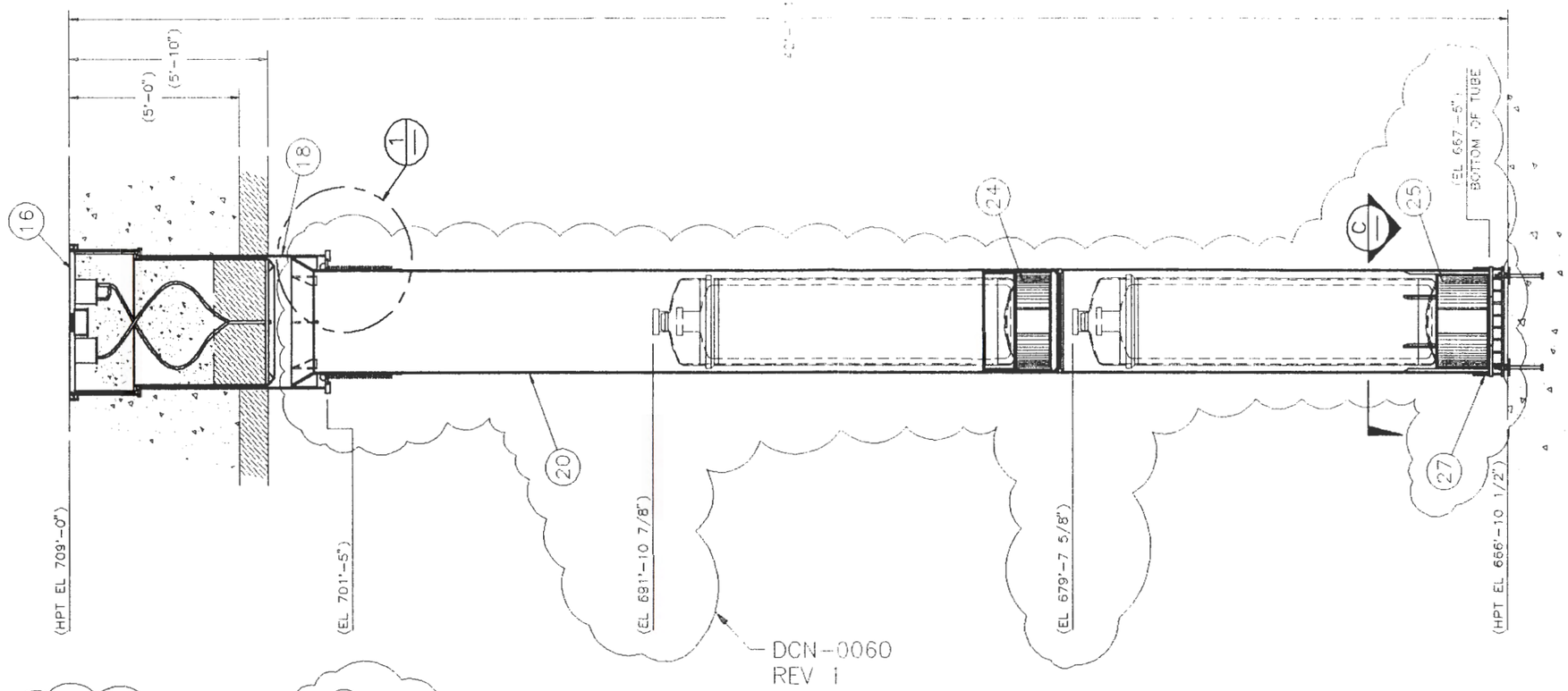

SECTION B
SCALE: 1/2"=1'-0"

2 OVERPACK CANISTER STORAGE TUBE ASSEMBLY (17 REQD)

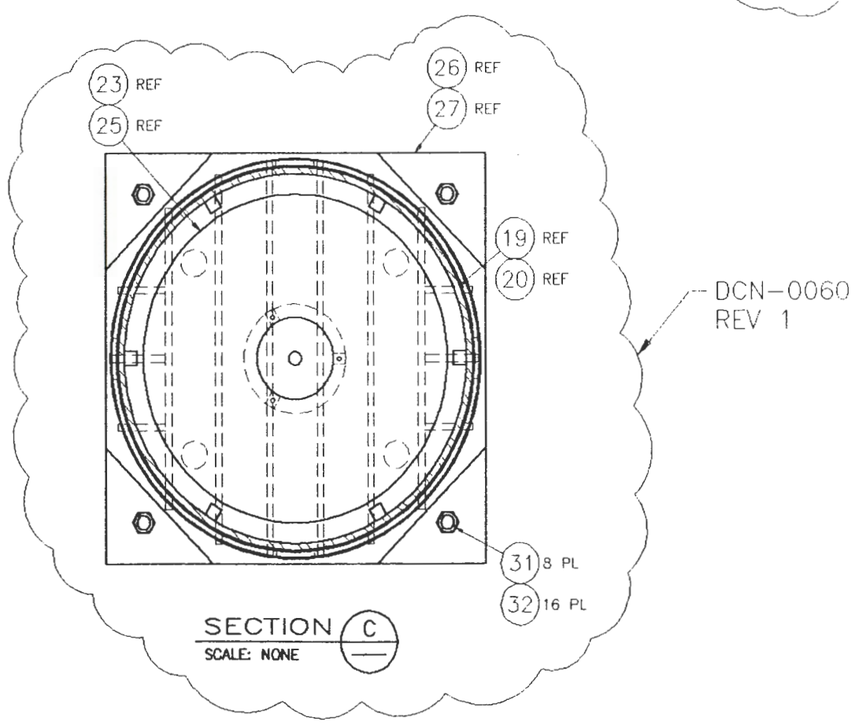

SECTION C
SCALE: NONE

FLUOR DANIEL	U.S. DEPARTMENT OF ENERGY HANFORD WASTE VITRIFICATION PLANT	DESIGN CHANGE NOTICE
DESCRIPTION OF CHANGE: CHANGE OVERPACK CANISTER STORAGE TUBE ASSEMBLY AND TUBE BASE ASSEMBLY		BASE DOC. NO. H-2-120397 SHT/PG. 1 REV. 1 CR NO. N/A DISCIPLINE: MECHANICAL
PREPARED BY:	DATE: 9-14-93	DCN-0060 REV. 1 PAGE 6
DISCIPLINE ENGINEER: R. Hulskamp	DATE: 9-16-93	

ACAD

9513336.1329

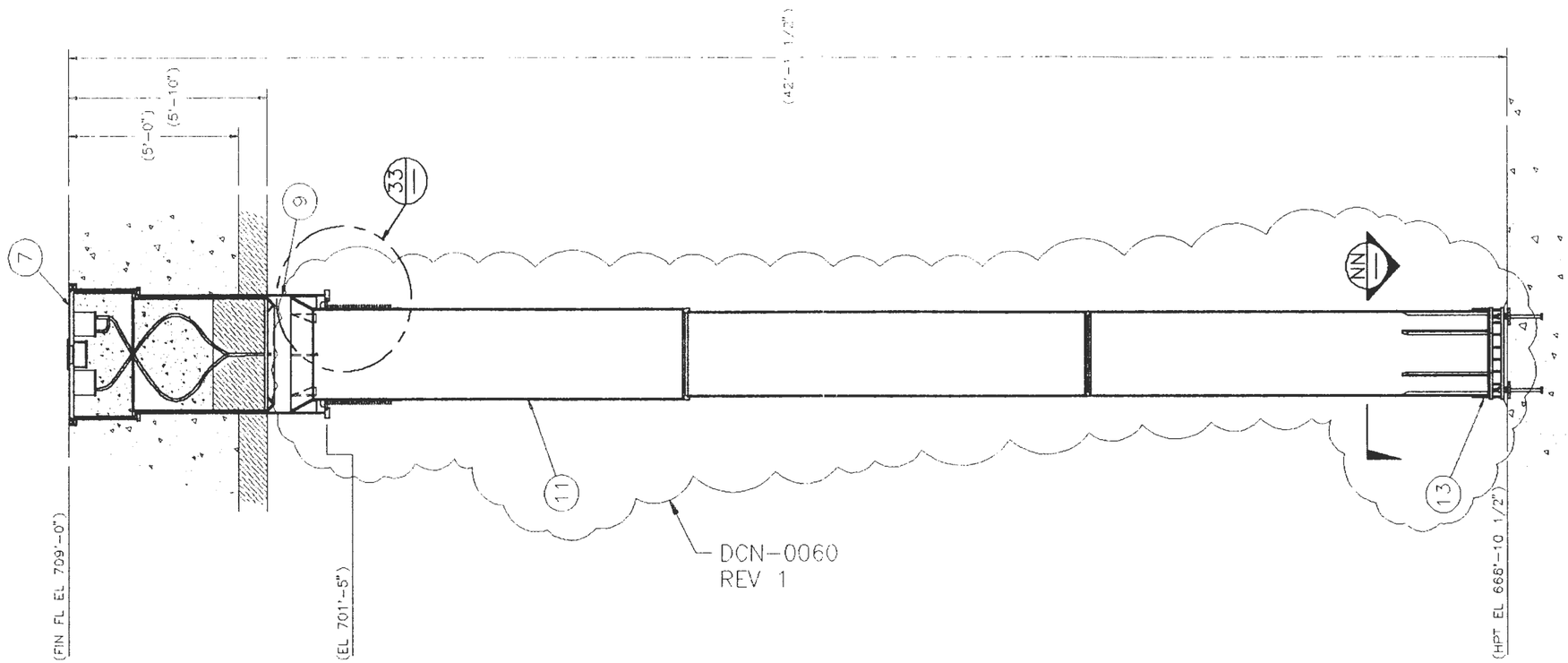

SECTION LL
SCALE: 1/2" = 1'-0"

1 STANDARD CANISTER STORAGE TUBE ASSEMBLY

FLUOR DANIEL	U.S. DEPARTMENT OF ENERGY HANFORD WASTE VITRIFICATION PLANT	DESIGN CHANGE NOTICE
DESCRIPTION OF CHANGE: CHANGED STANDARD CANISTER STORAGE TUBE ASSEMBLY		BASE DOC. NO. H-2-120143 SHT/PG. 1 REV. 1 CR NO. N/A DISCIPLINE: MECHANICAL
PREPARED BY:	DATE: 9-14-93	DCN-0060 / REV. 1 / PAGE 7
DISCIPLINE ENGINEER: R. Hulskamp	DATE: 9-16-93	

ACAD

9513336.1330

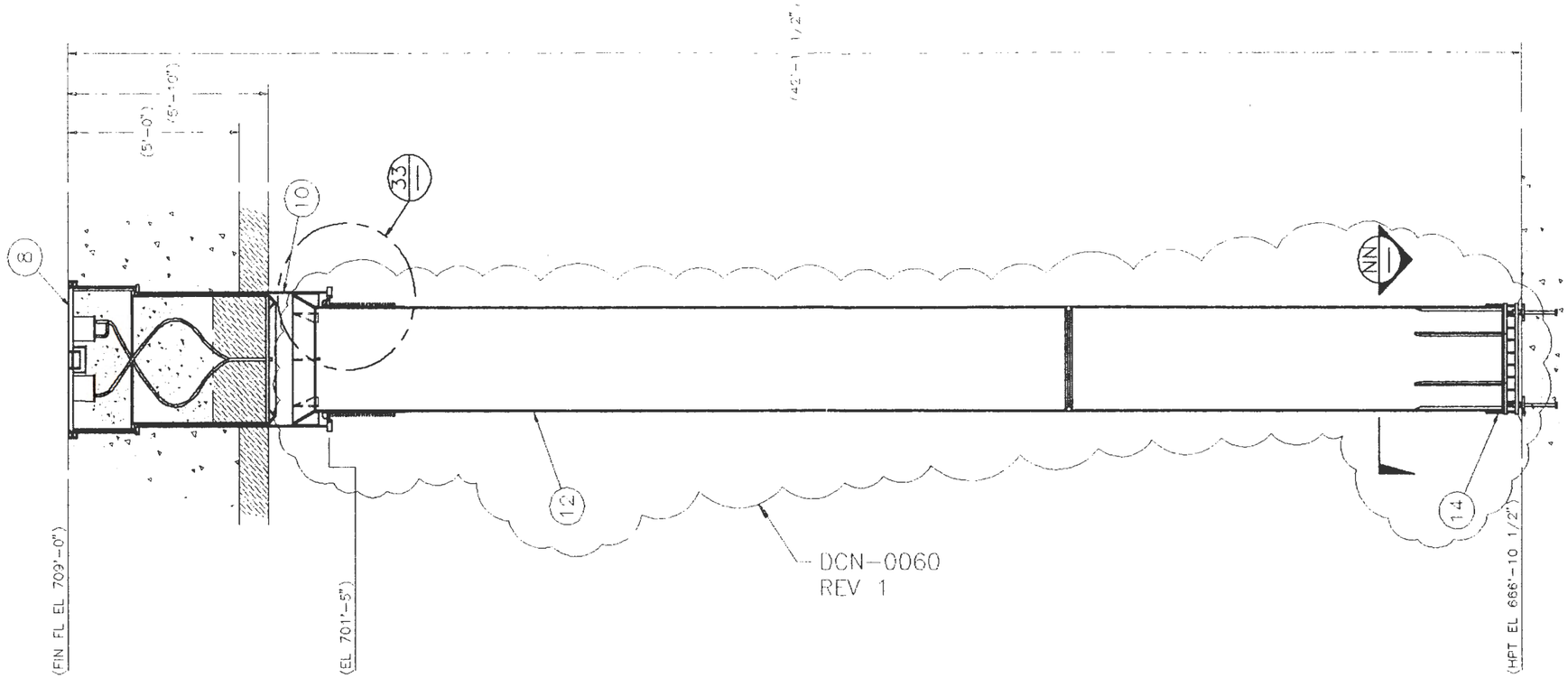

SECTION MM
SCALE: 1/2" = 1'-0"

2 OVERPACK CANISTER STORAGE TUBE ASSEMBLY

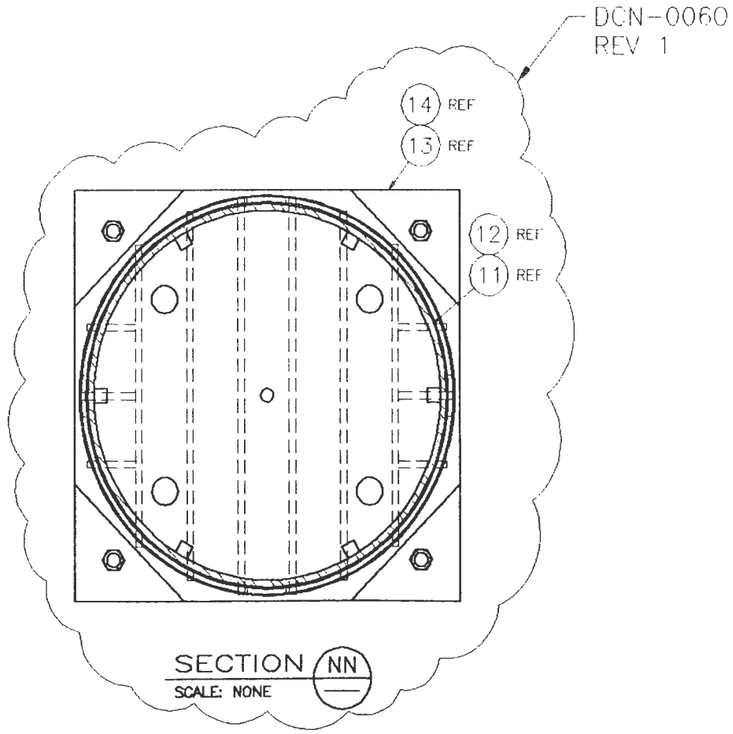

SECTION NN
SCALE: NONE

FLUOR DANIEL — U.S. DEPARTMENT OF ENERGY, HANFORD WASTE VITRIFICATION PLANT		DESIGN CHANGE NOTICE
DESCRIPTION OF CHANGE: CHANGE OVERPACK CANISTER STORAGE TUBE ASSEMBLY		BASE DOC. NO. H-2-120143; SHT/PG. 1; REV. 1; CR NO. N/A; DISCIPLINE: MECHANICAL
PREPARED BY:	DATE: 9-14-93	DCN-0060 — REV. 1 — PAGE 8
DISCIPLINE ENGINEER: R. Hulskamp	DATE: 9-16-93	

ACAD

9513336.1331

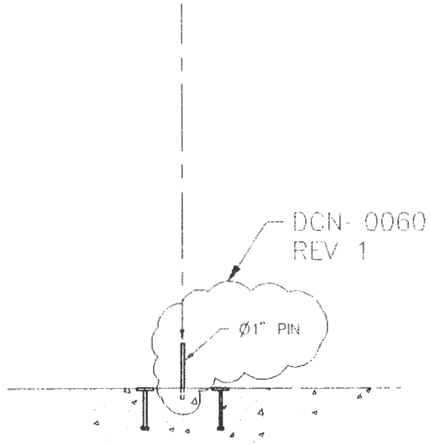

STEP 1

SCALE: 1/2"=1'-0"

1. REMOVE BRACE.
2. REMOVE BOTTOM PROTECTIVE COVER.
3. INSTALL LOCATING FIXTURE.
4. LOCATE PLUG EMBED CENTERLINE ON VAULT FLOOR.
5. DRILL Ø1" HOLE TO A MAX DEPTH OF 2".
6. INSTALL Ø1" PIN.

DCN--0060
REV 1

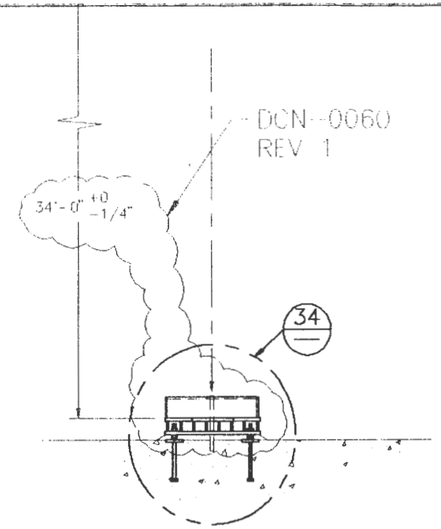

STEP 2

SCALE: 1/2"=1'-0"

1. LOCATE TUBE BASE ASSEMBLY OVER Ø1" PIN.
2. LOCATE THE (4) TUBE BASE ASSEMBLY ANCHOR HOLE CENTERLINES TO THE FLOOR EMBEDS.
3. INSTALL THREADED WELD STUDS TO THE VAULT EMBEDS.
4. PLACE TUBE BASE ASSEMBLY ONTO THE THREADED WELD STUDS WITH THE AIR SLOTS FACING EAST TO WEST.
5. ADJUST THE TUBE BASE ASSEMBLY HEIGHT LEVEL AND LOCK IN PLACE.
6. REMOVE Ø1" LOCATING PIN.
7. CHECK TUBE BASE ASSEMBLY LOCATION TO FLOOR PLUG EMBED CENTERLINE.
8. INSTALL GROUTING FORM.
9. GROUT TUBE BASE ASSEMBLY AS SHOWN.
10. AFTER CURING REMOVE FORMS.
11. REMOVE LOCATING FIXTURE.

DCN-0060
REV 1

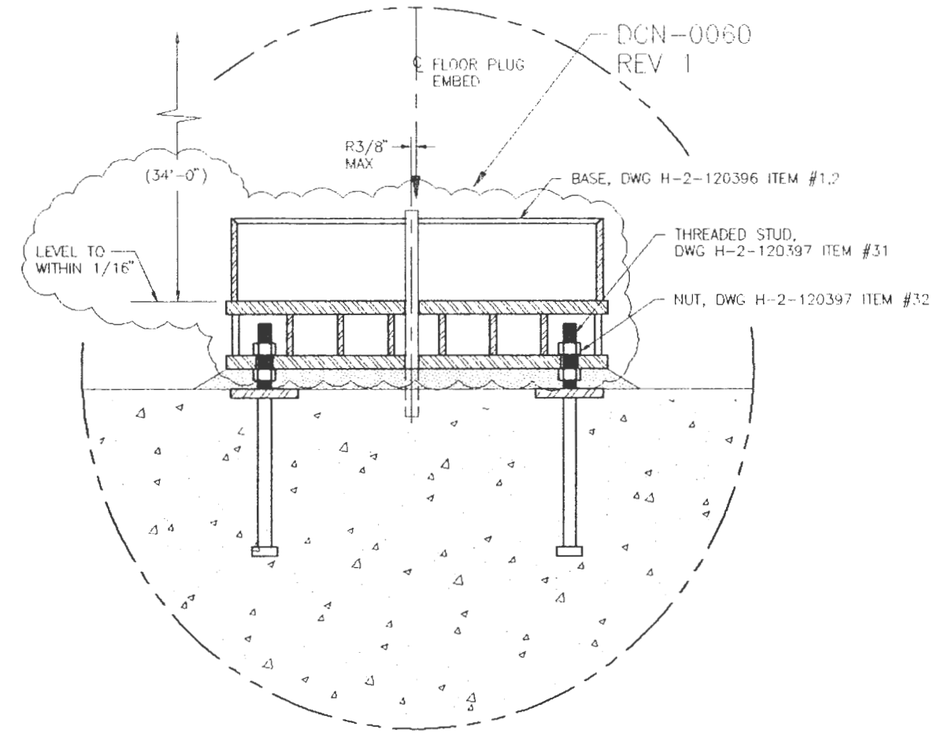

DETAIL 34

SCALE: 1"=1'-0"
LOOKING EAST TO WEST

DCN-0060
REV 1

FLUOR DANIEL — U.S. DEPARTMENT OF ENERGY, HANFORD WASTE VITRIFICATION PLANT		DESIGN CHANGE NOTICE
DESCRIPTION OF CHANGE: CHANGE TUBE BASE ASSEMBLY AND INSTALLATION PROCEDURE		BASE DOC. NO. H-2-120143; SHT/PG. 2; REV. 1; CP NO. N/A; DISCIPLINE: MECHANICAL
PREPARED BY:	DATE: 9-14-93	DCN-0060 — REV. 1 — PAGE 9
DISCIPLINE ENGINEER: R. Hulskamp	DATE: 9-14-93	

ACAD

9513336.1342

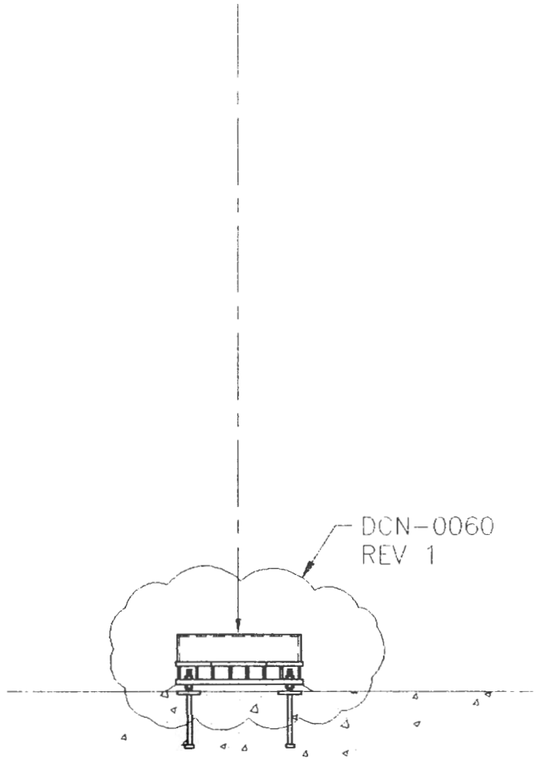

STEP 3

SCALE: 1/2"=1'-0"

1. LOWER STORAGE TUBE ASSEMBLY INSIDE THE FLOOR PLUG EMBED.
2. STOP LOWERING WHEN BELLOWS ARE 24" TO 36" ABOVE EMBED C-BORE AS SHOWN. SEE DETAIL-35.
3. INSTALL THE TUBE GUIDES AND CENTER THE TUBE ASSEMBLY. SEE DETAIL-35.
4. CONTINUE TO LOWER THE STORAGE TUBE ASSEMBLY TO THE BOTTOM.
5. REMOVE LIFTING DEVICE.

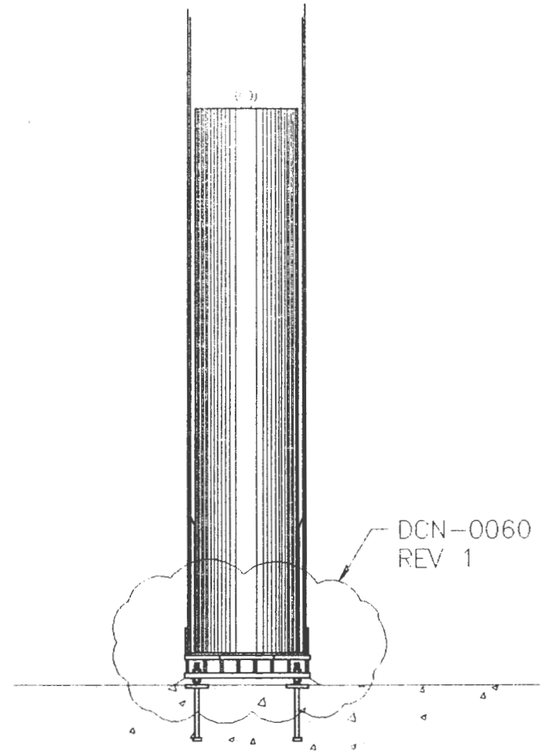

STEP 4

SCALE: 1/2"=1'-0"

1. INSERT TUBE GAUGE ASSEMBLY TO THE BOTTOM OF THE TUBE ASSEMBLY. REMOVE TUBE GAUGE ASSEMBLY.
2. INSERT THE CORRECT IMPACT ABSORBER GAUGE TO THEIR MATCHING SEAT AS SHOWN. REMOVE IMPACT ABSORBER GAUGES.
3. IF ALL THE GAUGES CAN BE INSTALLED AND REMOVED WITHOUT ANY BINDING OR INTERFERENCE REMOVE TUBE GUIDES AND CONTINUE TO STEP 5.

FLUOR DANIEL	U.S. DEPARTMENT OF ENERGY HANFORD WASTE VITRIFICATION PLANT	DESIGN CHANGE NOTICE
DESCRIPTION OF CHANGE: CHANGE TUBE BASE ASSEMBLY		BASE DOC. NO. H-2-120143 SHT/PG. 3 REV. 1 CR NO. N/A DISCIPLINE: MECHANICAL
PREPARED BY:	DATE: 9-14-93	DCN-0060 REV. 1 PAGE 10
DISCIPLINE ENGINEER: R. Hulskamp	DATE: 9-16-93	

ACAD