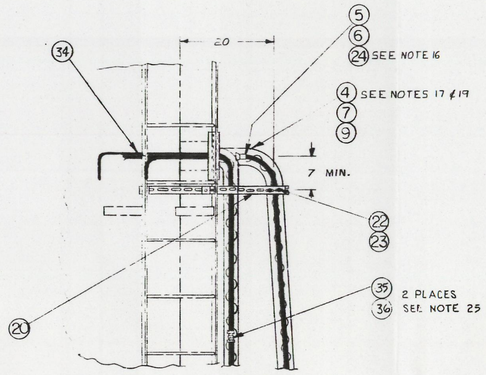


DETAIL II 1-6D
SCALE: 1"=1'-0"

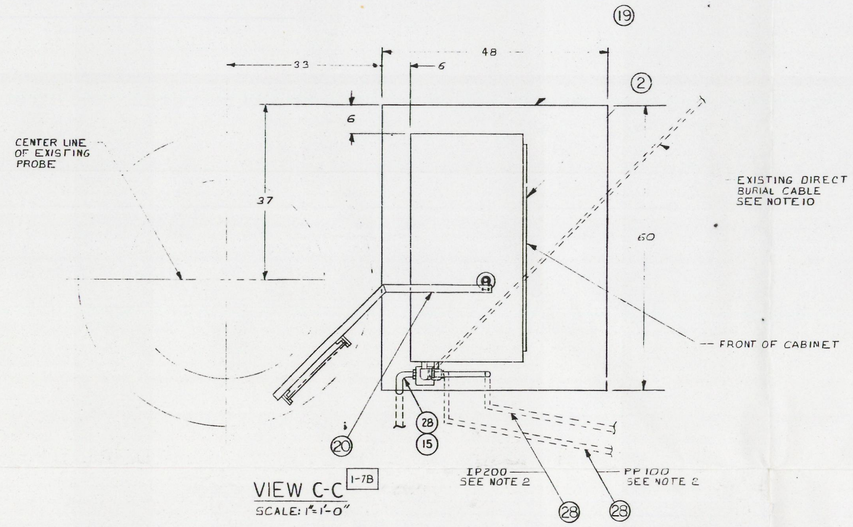


VIEW C-C 1-7B
SCALE: 1"=1'-0"

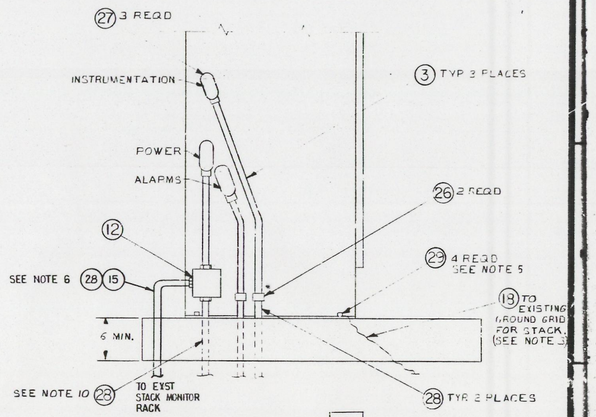


DETAIL III 1-8G
SCALE: 1/8

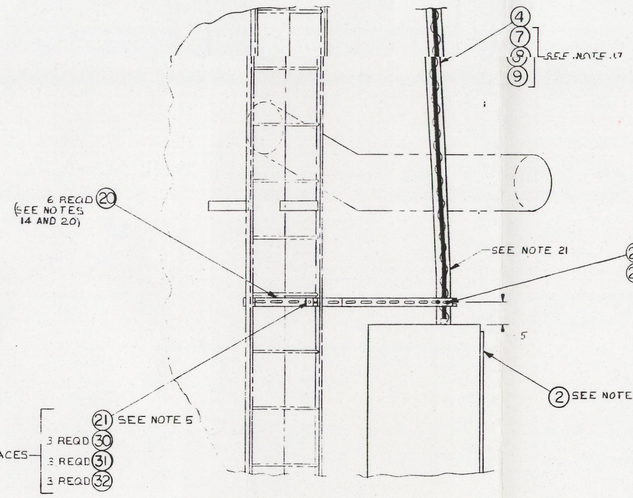


DETAIL IV 1-6C
SCALE: 1"=1'-0"

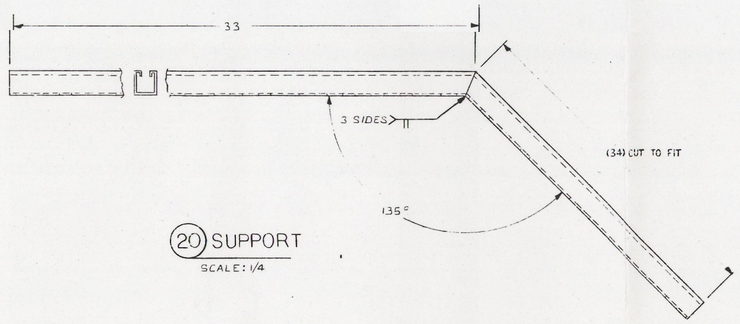


20 SUPPORT
SCALE: 1/4

## GENERAL NOTES

1. ELECTRICAL INSTALLATION SHALL CONFORM TO THE 1981 EDITION OF THE NATIONAL ELECTRICAL CODE.
2. FIELD LOCATE CONDUIT APPROXIMATELY AS SHOWN.
3. GROUNDING SHALL BE PER HANFORD PLANT STANDARD HPS-E-12-5.
4. PART NO'S 3,7,8,10,11,13,15,16,17, & 25 THRU 28 SHALL BE UL OR FM LISTED.
5. MOUNTING HOLES TO BE MATCH DRILLED FROM PART.
6. LEAVE EXST STACK MONITOR RACK IN PLACE AND RE-ROUTE 120 VAC FROM PULLBOX (PART 12). DISCONNECT EXST SAMPLE LINE FROM PROBE AND CAP.
7. ACCEPTANCE TEST PROCEDURE PER ATP-G-999-00010.
8. ALL PARTS SHALL BE PROCURED AS Q.A. LEVEL III, EXCEPT NO. 2.
9. MODIFY PANELBOARD A IN BLDG 225 BD AS FOLLOWS:
   A. COMBINE EXISTING CIRCUITS FROM CIRCUIT BREAKER 2 AND 3 ON CIRCUIT BREAKER 2.
   B. MOVE WIRING FROM CIRCUIT BREAKER 5 TO CIRCUIT BREAKER 3.
   C. REMOVE EXISTING 1 POLE BREAKER FROM CIRCUIT 5 LOCATION.
   D. MOVE CIRCUIT 7, 3 POLE BREAKER TO CIRCUIT 5 LOCATION.
   E. REMOVE SPARE 1 POLE CIRCUIT BREAKER FROM CIRCUIT 11 AND INSTALL 2 POLE CIRCUIT BREAKER (PART NO. 11) IN CIRCUIT 9 LOCATION. WIRE USING EXISTING WIRING AS SHOWN ON WIRING DIAGRAM.
10. USE EXISTING AC POWER CABLE FROM 225 BD PANELBOARD "A" TO EXISTING STACK MONITOR SYSTEM TO PROVIDE POWER TO NEW STACK MONITOR. REROUTE CABLE AS REQD AT STACK AND STUB UP THRU NEW CONCRETE PAD AS SHOWN USING CONDUIT (PART NO. 28)
11. IN GENERIC STACK CABINET ASSY (H-2-92501) PLUG THE RECORD SAMPLE VACUUM PUMP INTO THE UNSWITCHED RECORD SAMPLE OUTLET. FILL DUMMY PLUG PART NO. 25 WITH RTV AND INSTALL IN SWITCHED OUTLET. PUT TAG ON DUMMY PLUG SAYING "DO NOT REMOVE."
12. REMOVE EXISTING 10 KVA TRANSFORMER AND REPLACE WITH NEW 15 KVA TRANSFORMER (PART NO. 10). USE EXISTING WIRING.
13. INSTALL AUXILIARY CONTACTS (PART NO. 13) ON RELAYS K1-7-1, K1-7-2, K3-7-1 AND K3-7-2. WIRE N.O. CONTACTS AS SHOWN ON WIRING DIAGRAM.
14. SAMPLE TUBING SUPPORTS SHALL BE MOUNTED DIRECTLY BEHIND AND BENEATH RUNGS OF LADDER TO PREVENT INTERFERENCE.
15. CONDUCTORS SHALL BE IDENTIFIED WITH WIRE NO'S USING IMPRINTED TUBULAR WIRE MARKERS AT ALL TERMINATIONS.
16. APPLY THREADLOCKING COMPOUND (PART NO. 24) TO ALL SAMPLE LINE TUBE FITTING THREADS AT ASSEMBLY.
17. INSTALL HEAT TRACE PART NO. 7 AND CONNECTOR KIT PART NO. 6 PER VENDOR'S INSTRUCTIONS. SEE CVI 20753. CONNECT TO POWER CABLE EXTENDING THRU TOP OF CABINET. LOCATE THERMOSTAT BULB ON TUBING 180° FROM HEAT TRACE. INSULATE SAMPLE LINE AND HEAT TRACE WITH PART NO. 1.
18. NAMEPLATES SHALL BE 1-1/2" × 1/2" AND MARKED USING 5/32" HIGH CHARACTERS. SEE LEGEND OMIT HOLES AND BOND IN PLACE PER HPS-I-2-7.
19. SAMPLE TUBING (PART NO. 4) SHALL BE INSTALLED WITH A MINIMUM NUMBER OF BENDS USING A MINIMUM BEND RADIUS OF 75 INCHES.

GEN. NOTES CONT. ON SH. 3

CAUTION
NOT COMPLETE WITHOUT
CURRENT STATUS OF OUTSTANDING
ECNS FROM DATA BASE

MAR 24 1993

REVIEW NUMBER 0199
THIS DRAWING HAS BEEN APPROVED BY A ROCKWELL DOCUMENT REVIEW BOARD.
REVISION NO. 0
CHAIRMAN J.W. Cameron DATE 12-3-81

IMPACT LEVEL I

| REV | DESCRIPTION | |
|---|---|---|
| 11 | | |
| | | |
| | | |
| 1 | IMPACT LEVEL CHANGED Q.A. LEVEL TO PARTS 34,35,36 & N II-F. INCORP. E.O. 9805 - ADDED | |
| 2 | 308 INCORPORATED ECN # 55196 & EO # | |

REVISION APPROVALS: QUALITY ASSURANCE; RESPONSIBLE ENGINEER; DRAFTING; CHANGE CONTROL; DOCUMENT CONTROL

REVISIONS: COMMENT PRT ISSUE NO. 2 11/2/81; CHECK PRT. ISSUE NO. 1 11/3/81

DRAWING STATUS DI E-389

REFERENCE DRAWINGS: NEXT USED ON H-2-92507 SH. 1

| DRAWING APPROVALS | DATE |
|---|---|
| SUPV. PROJECT ENGINEER Bruce E. McDonald | 9/5/81 |
| SUPV. QUALITY ASSURANCE | |
| APPD. | 11/1/81 |
| APPD. R.D. Keck | 11/1/81 |
| APPD. | 12-3-81 |
| DESIGNED R. STANTON | |
| DRAWN | 11/5/81 |
| CHECKED | 11/5/81 |
| DESIGN ENGINEER R. NORMAN | 11/5/81 |
| CLASSIFICATION NONE | INT NOT REQD |

U. S. Department of Energy
Richland Operations Office
Rockwell Hanford Operations
Richland, Washington 99352

STACK MONITORING SYSTEM INSTALLATION 296-B-10

SCALE AS NOTED · CLASS NO. 225 B · TYPE NO. 7501,5901 · DRAWING NO. H-2-92507 · SHEET NO. 2 · SHEETS NO. 4

0031025

SEP 1993
RECEIVED
EDMC

START

0031025

SCALE: 1"=1'-0"

## GENERAL NOTES

1. ELECTRICAL INSTALLATION SHALL CONFORM TO THE 1981 EDITION OF THE NATIONAL ELECTRICAL CODE.
2. FIELD LOCATE CONDUIT APPROXIMATELY AS SHOWN.
3. GROUNDING SHALL BE PER HANFORD PLANT STANDARD HPS-E-12-5.
4. PART NO'S 3,7,8,10,11,13,15,16,17, & 25 THRU 28 SHALL BE UL OR FM LISTED.
5. MOUNTING HOLES TO BE MATCH DRILLED FROM PART.
6. LEAVE EXST STACK MONITOR RACK IN PLACE AND RE-ROUTE 120VAC FROM PULLBOX (PART 12). DISCONNECT EXST SAMPLE LINE FROM PROBE AND CAP.
7. ACCEPTANCE TEST PROCEDURE PER ATP-G-9911-00010.
8. ALL PARTS SHALL BE PROCURED AS Q.A. LEVEL III, EXCEPT NO. 2.
9. MODIFY PANELBOARD A IN BLDG 225 BD AS FOLLOWS:
   A. COMBINE EXISTING CIRCUITS FROM CIRCUIT BREAKER 2 AND 3 ON CIRCUIT BREAKER 2.
   B. MOVE WIRING FROM CIRCUIT BREAKER 5 TO CIRCUIT BREAKER 3.
   C. REMOVE EXISTING 1 POLE BREAKER FROM CIRCUIT 5 LOCATION.
   D. MOVE CIRCUIT 7, 2 POLE BREAKER TO CIRCUIT 5 LOCATION.
   E. REMOVE SPARE 1 POLE CIRCUIT BREAKER FROM CIRCUIT 11 AND INSTALL 2 POLE CIRCUIT BREAKER (PART NO. 11) IN CIRCUIT 9 LOCATION. WIRE USING EXISTING WIRING AS SHOWN ON WIRING DIAGRAM.
10. USE EXISTING AC POWER CABLE FROM 225 BD PANELBOARD "A" TO EXISTING STACK MONITOR SYSTEM TO PROVIDE POWER TO NEW STACK MONITOR. REROUTE CABLE AS REQD AT STACK AND STUB UP THRU NEW CONCRETE PAD AS SHOWN USING CONDUIT (PART NO. 28)
11. IN GENERIC STACK CABINET ASSY (H-2-92501) PLUG THE RECORD SAMPLE VACUUM PUMP INTO THE UNSWITCHED RECORD SAMPLE OUTLET. FILL DUMMY PLUG PART NO. 25 WITH RTV AND INSTALL IN SWITCHED OUTLET. PUT TAG ON DUMMY PLUG SAYING "DO NOT REMOVE."
12. REMOVE EXISTING 10 KVA TRANSFORMER AND REPLACE WITH NEW 15 KVA TRANSFORMER (PART NO. 10). USE EXISTING WIRING.
13. INSTALL AUXILIARY CONTACTS (PART NO. 19) ON RELAYS K1-7-1, K1-7-2, K3-7-1 AND K3-7-2. WIRE N.O. CONTACTS AS SHOWN ON WIRING DIAGRAM.
14. SAMPLE TUBING SUPPORTS SHALL BE MOUNTED DIRECTLY BEHIND AND BENEATH RUNGS OF LADDER TO PREVENT INTERFERENCE.
15. CONDUCTORS SHALL BE IDENTIFIED WITH WIRE NO'S USING IMPRINTED TUBULAR WIRE MARKERS AT ALL TERMINATIONS.
16. APPLY THREADLOCKING COMPOUND (PART NO. 34) TO ALL SAMPLE LINE TUBE FITTING THREADS AT ASSEMBLY.
17. INSTALL HEAT TRACE PART NO. 7 AND CONNECTOR KIT PART NO. 6 PER VENDOR'S INSTRUCTIONS. SEE CVI 20758. CONNECT TO POWER CABLE EXTENDING THRU TOP OF CABINET. LOCATE THERMOSTAT BULB ON TUBING 180° FROM HEAT TRACE. INSULATE SAMPLE LINE AND HEAT TRACE WITH PART NO. 9.
18. NAMEPLATES SHALL BE 1-1/2" x 1/2" AND MARKED USING 5/32" HIGH CHARACTERS. SEE LEGEND OMIT HOLES AND BOND IN PLACE PER HPS-I-2-7.
19. SAMPLE TUBING (PART NO. 4) SHALL BE INSTALLED WITH A MINIMUM NUMBER OF BENDS USING A MINIMUM BEND RADIUS OF 25 INCHES.

CUT TO FIT

GEN. NOTES CONT. ON SH. 3

REVIEW NUMBER 0199

THIS DRAWING HAS BEEN APPROVED BY A ROCKWELL DOCUMENT REVIEW BOARD.
REVISION NO. 0
CHAIRMAN J.W. Cameron DATE 12-2-81

IMPACT LEVEL I

| REVISIONS | | |
|---|---|---|
| 1308 INCORPORATED FCN #55196 & EO # | 2 | |
| IMPACT LEVEL CHANGED Q.A. LEVEL TO PARTS 34,35,36 ZN 11-F. INCORP. E.O. 9605 - ADDED | 1 | |
| | | |
| 11/2/81 CHECK PRINT ISSUE NO. 1 11/3/81 | 2 | |

DRAWING STATUS 01 E-389

| DRAWING APPROVALS | DATE |
|---|---|
| [illegible] | 3/3/81 |
| [illegible] | 11/4/81 |
| R.D. Kirk | 11/4/81 |
| [illegible] | 12-2-81 |
| R STANTON | |
| [illegible] | 11/4/81 |
| [illegible] | 11/2/81 |
| R. NORMAN | 12/2/81 |

U. S. Department of Energy
Richland Operations Office
Richland, Washington 99352

STACK MONITORING SYSTEM INSTALLATION 296-B-10

| SCALE | BUILDING | DRAWING NO. |
|---|---|---|
| AS NOTED | 225 B | 7501, 5901 |

| NONE | NOT REQD | H-2-92507 | 2 | 4 |
|---|---|---|---|---|

2-4 2-3 2-2 2-1

SEP 1993 RECEIVED EDMC