9413297.0563

START

0039094 53
Incoming:9403880

Department of Energy
Richland Operations Office
P.O. Box 550
Richland, Washington 99352

SEP 16 1994

94-PCA-034

Mr. A. W. Conklin, Head
Air Emissions and
Defense Waste Section
State of Washington
Department of Health
Airdustrial Park Building 5, LE-13
Olympia, Washington 98504-0095

Mr. J. McCormick, Director
Air and Toxics Division
U.S. Environmental Protection Agency
Region 10
Mail Stop AT-082
1200 Sixth Avenue
Seattle, Washington 98101

Dear Messrs. Conklin and McCormick:

NOTICE OF CONSTRUCTION FOR THE 244-U DOUBLE CONTAINED RECEIVER TANK

Enclosed is a Notice of Construction (NOC) for the 244-U Double Contained Receiver Tank (DCRT). The NOC is provided pursuant to Washington Administrative Code 246-247 and 40 Code of Federal Regulations 61, Subpart H. The NOC includes all information required by both regulations.

Unabated emissions from operation of this DCRT will result in an offsite dose less than 1.85 millirem per year (mrem/yr) to the maximally exposed individual. The abated dose is 0.00002 mrem/yr. The DCRT is equipped with a monitoring system in compliance with the National Emission Standard for Hazardous Air Pollutants.

OCT 1994
RECEIVED
EDMC

SEP 16 1994



Should you have any questions, please contact me or Mr. S. D. Stites of my staff on (509) 376-8566.

Sincerely,

James E. Rasmussen

James E. Rasmussen, Acting Program Manager
Office of Environmental Assurance,
Permits, and Policy

EAP:SDS

Enclosure:
Notice of Construction

cc w/encl:
Administrative Record 5-2-3 (L Garner)
B. Burke, CTUIR
R. Jim, YIN
D. Powaukee, NPT

cc w/o encl:
W. Dixon, WHC
L. Garner, WHC
C. Sowa, WHC

Enclosure

9413297.0366



# RADIOACTIVE AIR EMISSIONS
# NOTICE OF CONSTRUCTION
# 244-U DCRT

## CONTENTS

1.0 Introduction . . . . . 5
1.1 Notification Requirement and Guidance . . . . . 5
1.2 Facility Identification . . . . . 5
1.3 Type of Proposed Action . . . . . 5
1.4 State Environmental Policy Act Environmental Checklist . . . . 9

2.0 Source Information . . . . . 9
2.1 Process Description . . . . . 9
2.2 Facility Inventory . . . . . 13

3.0 Unabated Release Rates . . . . . 15
3.1 Unabated Emissions . . . . . 15
3.2 Unabated Dose . . . . . 16

4.0 Control and Monitoring Systems . . . . . 17
4.1 Control System . . . . . 17
4.2 Measurement System . . . . . 17

5.0 Abated Release Rates . . . . . 19
5.1 Abated Emissions . . . . . 19
5.2 Abated Dose . . . . . 20

6.0 References . . . . . 21

Appendix A
BARCT Discussion . . . . . 22

Appendix B
244-U Ventilation System Design Drawings . . . . . 24

Appendix C
244-U Monitoring System Design . . . . . 29

## LIST OF FIGURES

1-1. General facility layout of 244-U Double contained Receiver Tank . . . 6
1-2. Photograph of 244-U Double contained Receiver Tank . . . . . 7
1-3. Location of 244-U Double contained Receiver Tank. . . . . 8
2-1. 241-U to 241-SY Tank Farm Transfer System Diagram. . . . . 10
2-2. Three Dimensional Cutaway of 244-U DCRT . . . . . 12
4-1. 3-D Perspective of 244-U Abatement Equipment. . . . . 18

## LIST OF TABLES

2-1. Facility Radionuclide Inventory . . . . . 14
3-1. Unabated Emissions . . . . . 15
3-2. Unabated Offsite Dose . . . . . 16
5-2. Abated Emissions . . . . . 19
5-2. Abated Offsite Dose . . . . . 20

**Cross Reference Between
Notice of Construction
and Appendix A of
Washington Administrative Code 246-247**

| Item from Appendix A | Notice of Construction Section |
|---|---|
| 1 | 1.2 Facility Identification |
| 2 | 1.2 Facility Identification |
| 3 | 1.3 Type of Proposed Action |
| 4 | 1.4 State Environmental Policy Act Environmental Checklist |
| 5 | 2.2 Facility Inventory |
| 6 | 2.2 Facility Inventory<br>4.1 Control System |
| 7 | 4.1 Control System |
| 8 | 3.2 Unabated Dose |
| 9 | 4.2 Monitoring System |
| 10 | 2.1 Process Description |
| 11 | 2.1 Process Description |
| 12 | 2.1 Process Description |
| 13 | 2.2 Facility Inventory<br>3.1 Unabated Emissions<br>5.1 Abated Emissions |
| 14 | 3.2 Unabated Dose<br>5.2 Abated Dose |
| 15 | 3.2 Unabated Dose<br>5.2 Abated Dose |
| 16 | Appendix A BARCT Discussion |
| 17 | 2.2 Facility Inventory |

## 1.0 Introduction

The 244-U Double Contained Receiver Tank (DCRT) was constructed to support interim stabilization activities associated with the 241-U Single-Shell Tank Farm which contains radioactive mixed waste. Over the years since construction in 1978, the system was never brought to an operational state. Recently the U.S. Department of Energy, Richland Operations Office, the U.S. Environmental Protection Agency, and the State of Washington Department of Ecology, agreed, via the Hanford Federal Facility Agreement and Consent Order (Tri-Party Agreement), to "Restore the DCRT to compliant operating condition." Hence, the ability to commence operation of the emission unit associated with the 244-U DCRT is mandated as part of that agreement. Figures 1-1 and 1-2 show the general layout and physical proportions of the 244-U DCRT Facility.

## 1.1 Notification Requirement and Guidance

This document serves as a Notice of Construction pursuant to the requirements of Washington Administrative Code (WAC) 246-247-060 and 40 Code of Federal Regulations (CFR) 61, Subpart H for the 244-U DCRT Initial Startup.

## 1.2 Facility Identification

U.S. Department of Energy, Richland Operations Office
Hanford Site
244-U Double Contained Receiver Tank
Richland, Washington 99352

The 244-U DCRT is located within the boundary of the 241-U Tank Farm in the 200 West Area of the Hanford Site. Figure 1-3 provides the location of the existing 244-U DCRT for which initial startup is proposed.

Responsible Manager:
Mr. J. E. Rasmussen, Acting Program Manager
Office of Environmental Assurance,
  Policy, and Permits
U.S. Department of Energy, Richland Operations Office
P.O. Box 550
Richland, Washington 99352

## 1.3 Type of Proposed Action

The 244-U DCRT initial startup represents a minor process modification which will result in a new emission source (Stack Number 296-U-11).

# TYPICAL DOUBLE-CONTAINED RECEIVER TANK

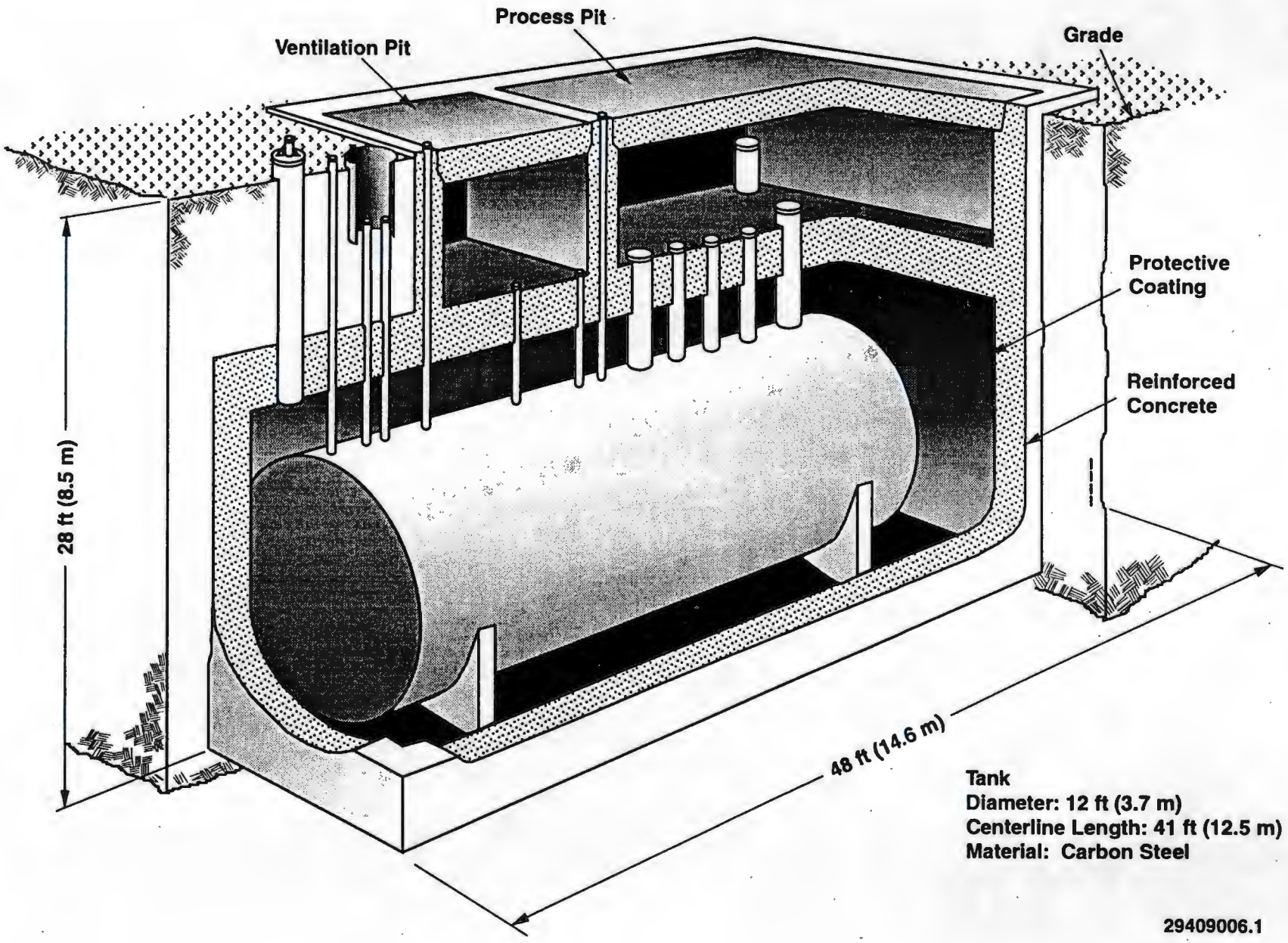


Figure 1-1. General facility layout of 244-U Double contained Receiver Tank.



9413297.0371

# 244-U DOUBLE-CONTAINED RECEIVER TANK

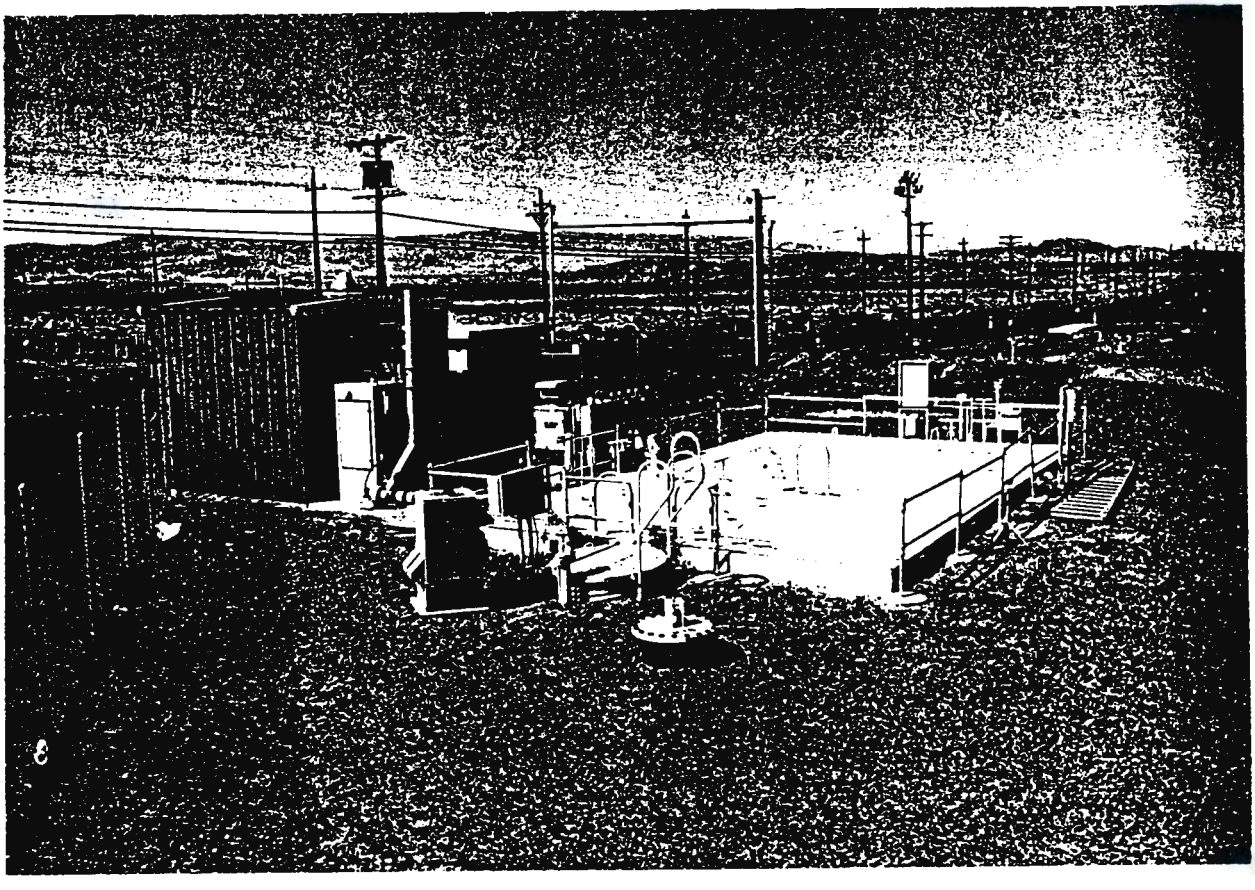

46°32'45"
119°37'22"

8704135-4CN
(PHOTO TAKEN 1987)

Figure 1-2. Photograph of 244-U Double contained Receiver Tank.

# 244-U Double Contained Receiver Tank

## Site Plan

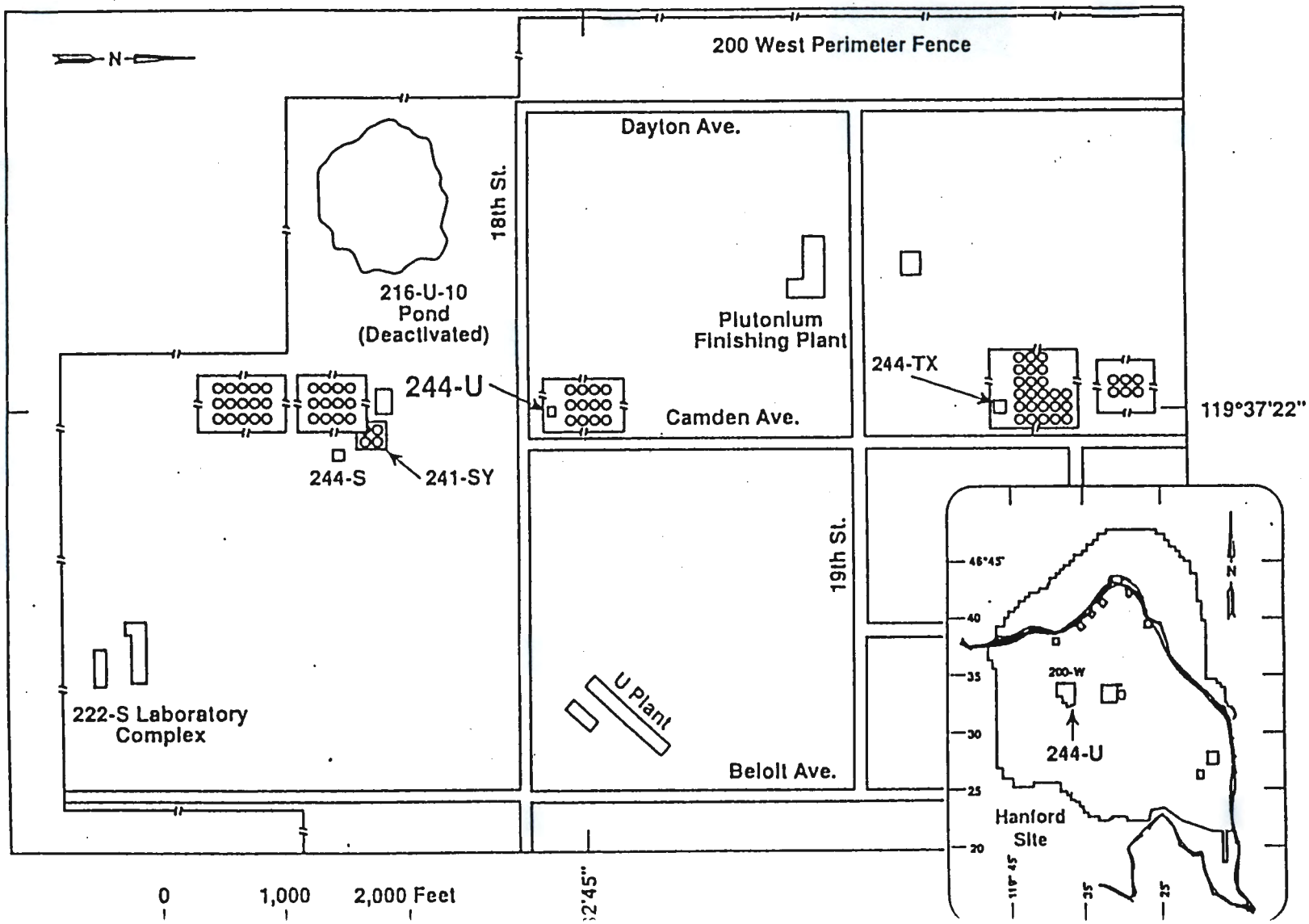


Figure 1-3. Location of 244-U Double contained Receiver Tank.

## 1.4 State Environmental Policy Act Environmental (SEPA) Checklist

The 244-U DCRT is categorically exempt from the SEPA Process.

## 2.0 Source Information

This section provides detailed information regarding the source and quantity of airborne radionuclide emissions resulting from continued operations after the 244-U DCRT initial startup.

## 2.1 Process Description

Although originally constructed in 1978, the 244-U DCRT was never started as its services had yet to be required. Over the years since construction, the system has never been brought to an operational state. The 244-U DCRT is identical in design to others that are currently in use performing an identical function. The existing state of the 244-U DCRT gave impetus to the negotiation of a Tri-Party Agreement Milestone (M-41-02-T04) to restore the 244-U DCRT to working order by March 31, 1995. Heightened emergency preparedness for release response and ensured readiness for interim stabilization activities were the motivating factors in the negotiated milestone. Other milestones have been established for the interim stabilization of specific tanks within the 241-U Tank Farm complex, currently scheduled to begin in July, 1995. The 244-U DCRT is a critical component for the successful execution of those interim stabilization milestone objectives. After discussions with the State of Washington Department of Health (DOH) in 1993, restoration activities at the 244-U DCRT were initiated and have been completed. Initial startup of the unit is suspended pending prior approval by the regulatory authorities.

The 244-U DCRT was constructed to support interim stabilization activities associated with the 241-U single-shell tank farm. Interim stabilization is a term used for describing the transfer of liquid waste in single-shell tanks to more environmentally sound double-shell tanks. Specifically, the 244-U DCRT was to serve as a staging point for saltwell liquor (tank waste supernate and interstitial liquid) pumped from the radioactive mixed waste contained in 241-U Tank Farm complex. Saltwell pumping of single-shell tanks is an integral step to reducing the potential for, or responding to, tank waste releases to the soil column in the event of loss of tank integrity. During pumping, free liquids (that fraction of tank waste that could actually leak from a tank) are extracted and interim-stored in the 244-U DCRT. Once an adequate amount of liquid is accumulated in the 244-U DCRT the liquid is then transferred to a double-shell tank in 241-SY Tank Farm which provides more secure storage pending final treatment and disposal. Figure 2-1 provides a rough schematic of the transfer system.

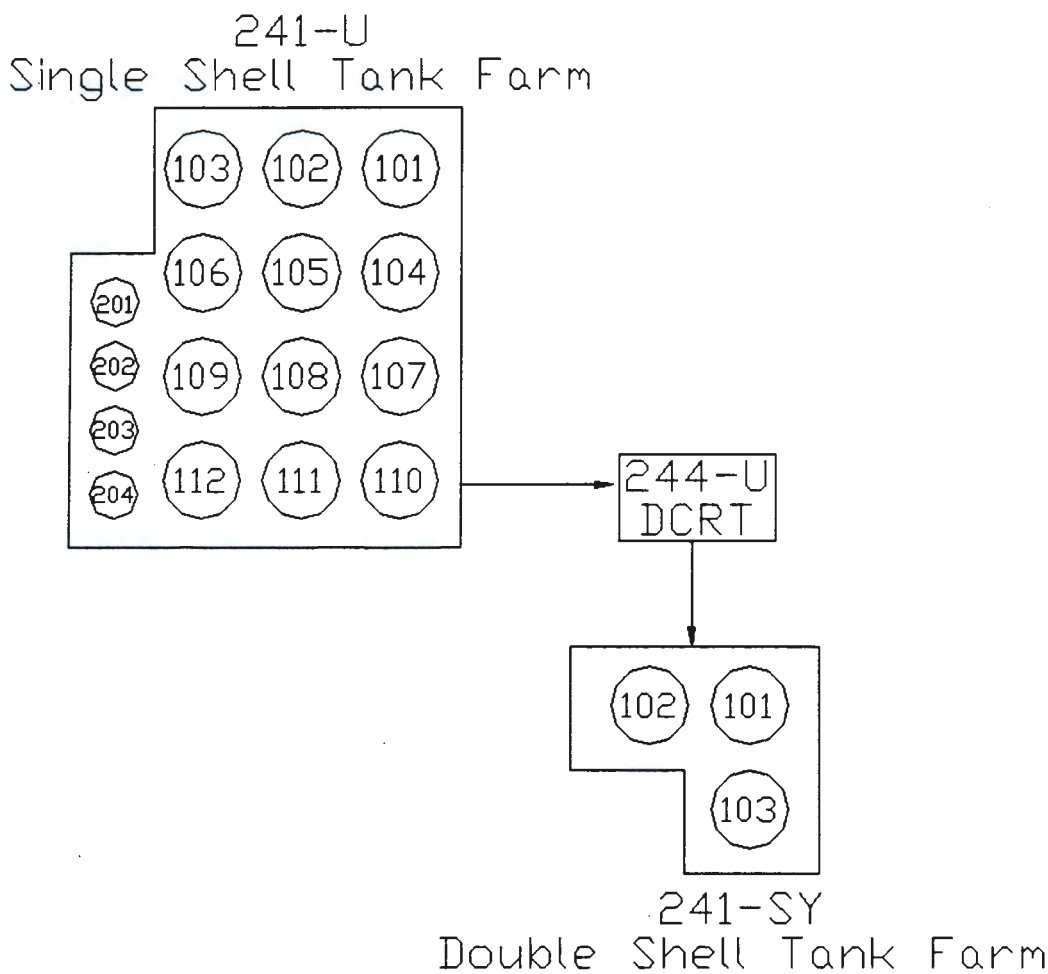


**Figure 2-1. 241-U to 241-SY Tank Farm Transfer System Diagram.**

The 244-U DCRT consists of an underground concrete structure which has two levels. The lower level, a vault which serves as secondary containment, contains the primary containment storage tank. The upper level contains a filter pit and a pump pit. There are other ancillary support pits associated with the 244-U DCRT which do not store or process liquid wastes. These are more fully described below. The air space between the steel tank and the concrete vault is the annulus. The vault provides double containment to prevent releases to the environment resulting from the failure of the tank or associated piping. Should such a failure occur or should annulus cleaning be required, the vault is equipped with a collection sump. The above-grade opening of the containment structure is closed with large, interlocking concrete coverblocks. Metal tape, or an equivalent, seals the coverblock seams to minimize the intrusion of air and rainwater. Figure 2-2 provides a three dimensional depiction of the overall facility.

The 244-U tank vessel has a total capacity of 117,000 liters (31,000 gallons). Administrative controls limit the operating capacity at 94,600 liters (25,000 gallons) with a high alarm of 98,400 liters (26,000 gallons). The receiver tank is of carbon steel and equipped with a waste transfer pump, instrumentation for measurement of specific gravity, weight factor, tank level and temperature.

Above the receiver tank vault are the pump pit, containing all process piping and pumps, and the filter pit, containing the exhaust heater and three removable High-Efficiency Particulate Air (HEPA) Filter Units. Both the filter pit and the pump pit have concrete walls and floors and are ten feet deep. Two additional pits, the flush pit and the instrument pit are made of galvanized corrugated metal pipe with concrete floors. The flush pit is housed in a building with the valves located above grade.

Three pipelines direct saltwell liquid to nozzles in the 244-U Pump Pit. Removable pipes (called jumpers) route the streams into the receiver tank. Transfer of accumulated liquids to the SY Tank Farm is performed using a deep-well turbine pump immersed in the 244-U DCRT. The discharge jumper from the pump is equipped with a flow meter and a diaphragm operated valve. Dilution water for the transfer is supplied to the suction of the transfer pump from the flush pit. The flush pit contains a magnetic flow meter and a valve for control of the water flowrate (used for dilution and flushing). Both the process solution flowrate and the dilution water flowrate are controlled by an automated control system, located in the 244-U Instrument Building, which sets their relative flows (the dilution rate) as a function of specific gravity of the process solution. Flushing capability for the pump and transfer route is also available from the flush pit.

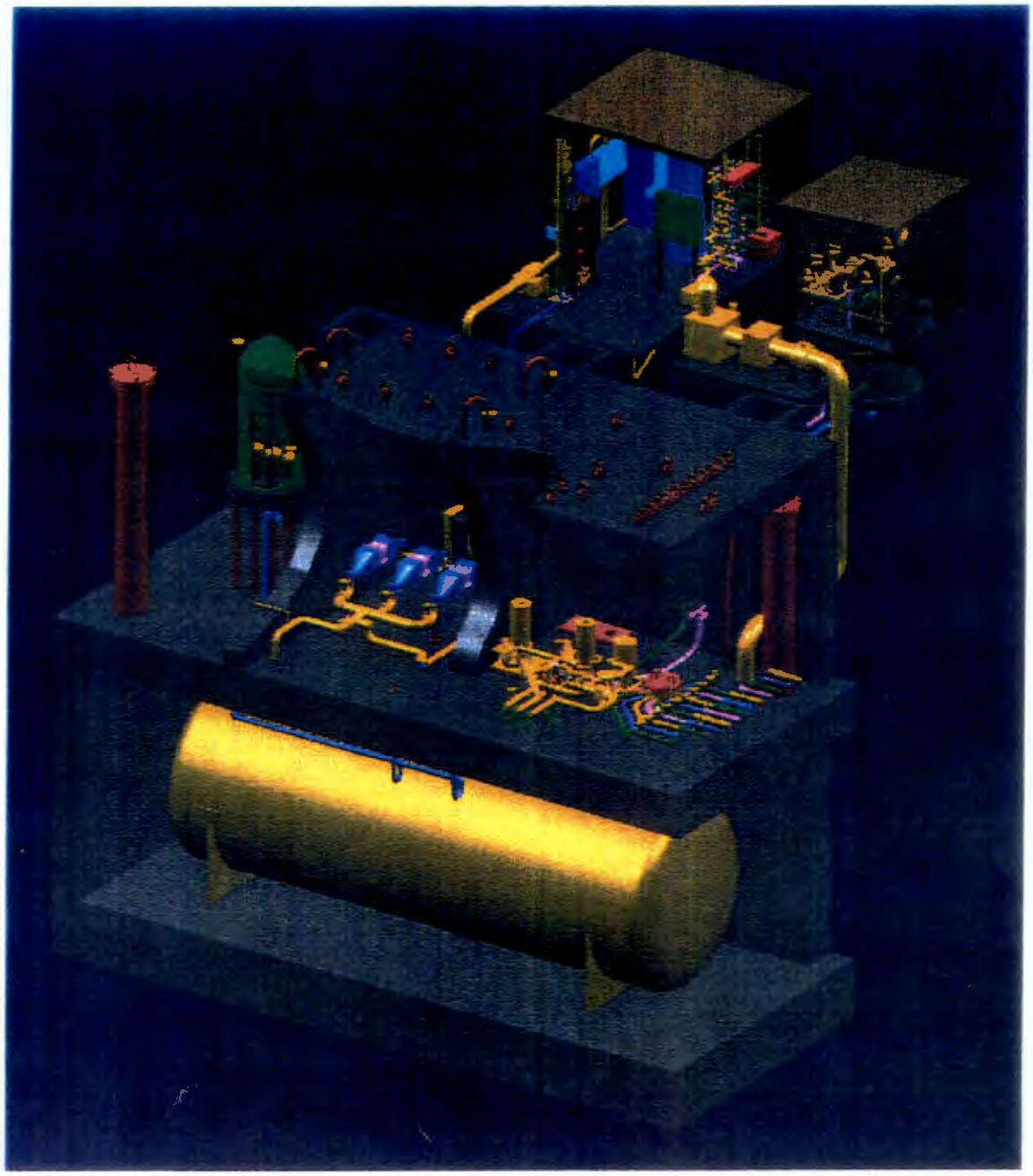

Figure 2-2. Three Dimensional Cutaway of 244-U DCRT.

## 2.2 Facility Inventory

Table 2-1 summarizes the maximum annual radionuclide inventory, or radiological source term, for the 244-U DCRT. The radiological source term data were obtained from *Radionuclide and Chemical Inventories for Single Shell Tanks*, WHC-SD-WM-TI-0565, Rev. 1. These data were decay-corrected to September 1993 in *Determination of the NESHAP Status of Tank Farm Stacks based on 40 CFR 61, Appendix D Factors*, WHC-SD-WM-EMP-031. Tanks 241-U-102 and 241-U-110 were used for determining the potential inventory of the 244-U DCRT. The waste in these two tanks represents the most extreme case for saltwell source term based on the volume and radioactivity of the waste. The fraction of the total inventory to be transferred was calculated by dividing the pumpable liquid volume by the total volume of the waste for each U-farm tank to be stabilized. This tank waste volume data was obtained from *Tank Farm Surveillance and Waste Status Summary for June 1993*, WHC-EP-0182-63. The total radionuclide inventory was calculated by taking the concentration for each radionuclide in each of the transfer tanks, multiplying that concentration by the volume to be transferred, and summing the contributions from each tank. The volume of waste in Tanks 241-U-102 and 241-U-110 is larger than the volume of waste that can be transferred through the 244-U DCRT under current operating scenarios in any one year. The larger volume is used in this document for conservatism and operating flexibility.

The projected inventory and the subsequent dose from that inventory is dependent upon the operational mode. The actual source term is limited by physical and administrative controls. The source term assessment presented in *Determination of the NESHAP Status of Tank Farm Stacks based on 40 CFR 61, Appendix D Factors*, WHC-SD-WM-EMP-031, fully describes the contributing factors for the lower source term. The resultant dose is shown to be one order of magnitude lower than the overall dose presented in this document.

**Table 2-1. Facility Radionuclide Inventory.**

| Radionuclide | Physical Form | Annual Possession Quantity (Ci/yr) |
|---|---|---|
| C-14 | Particulate | 1.24E-02 |
| Co-60 | Particulate | 1.15E+02 |
| Se-79 | Particulate | 4.39E-04 |
| Sr-89/90 | Particulate | 3.45E+04 |
| Y-90 | Particulate | 3.45E+04 |
| Tc-99 | Particulate | 1.46E-02 |
| Ru/Rh-106 | Gas | 9.70E-03 |
| I-129 | Gas | 2.53E-05 |
| Cs-137 | Particulate | 5.47E+04 |
| Ce-144 | Particulate | 1.15E-03 |
| Eu-154 | Particulate | 7.49E+02 |
| Nat.U | Particulate | 1.46E+00 |
| Np-237 | Particulate | 9.30E-05 |
| Pu-238 | Particulate | 1.99E+00 |
| Pu-239/240 | Particulate | 3.02E+01 |
| Pu-241 | Particulate | 1.20E+01 |
| Am-241 | Particulate | 9.84E-04 |
| Cm-242/244 | Particulate | 1.37E-05 |

## 3.0 Unabated Release Rates

This section provides information regarding the emission release rates from the 244-U DCRT initial startup and operations without the emission control system in place. Also included is the effective dose equivalent (EDE) to the maximally exposed individual (MEI) offsite resulting from unabated emissions.

### 3.1 Unabated Emissions

Table 3-1 contains the summary of unabated emissions for each specific radionuclide. The fraction of the total radiological inventory released was estimated using release factors published in Title 40 CFR 61, Appendix D. This represents a conservative estimate of potential uncontrolled emissions from routine operations.

**Table 3-1. Unabated Emissions.**

| Radionuclide | Annual Possession Quantity (Ci/yr) | Appendix D Factor | Annual Unabated Emissions (Ci/yr) |
|---|---|---|---|
| C-14 | 1.24E-02 | 1 E-03 | 1.24E-05 |
| Co-60 | 1.15E+02 | 1 E-03 | 1.15E-01 |
| Se-79 | 4.39E-04 | 1 E-03 | 4.39E-07 |
| Sr-89/90 | 3.45E+04 | 1 E-03 | 3.45E+01 |
| Y-90 | 3.45E+04 | 1 E-03 | 3.45E+01 |
| Tc-99 | 1.46E-02 | 1 E-03 | 1.46E-05 |
| Ru/Rh-106 | 9.70E-03 | 1 | 9.70E-03 |
| I-129 | 2.53E-05 | 1 | 2.53E-05 |
| Cs-137 | 5.47E+04 | 1 E-03 | 5.47E+01 |
| Ce-144 | 1.15E-03 | 1 E-03 | 1.15E-06 |
| Eu-154 | 7.49E+02 | 1 E-03 | 7.49E-01 |
| Nat.U | 1.46E+00 | 1 E-03 | 1.46E-03 |
| Np-237 | 9.30E-05 | 1 E-03 | 9.30E-08 |
| Pu-238 | 1.99E+00 | 1 E-03 | 1.99E-03 |
| Pu-239/240 | 3.02E+01 | 1 E-03 | 3.02E-02 |
| Pu-241 | 1.20E+01 | 1 E-03 | 1.20E-02 |
| Am-241 | 9.84E-04 | 1 E-03 | 9.84E-07 |
| Cm-242/244 | 1.37E-05 | 1 E-03 | 1.37E-08 |

## 3.2 Unabated Dose

The unabated dose to the MEI, located 24 kilometers (km) east of the 200 West Area, is shown in Table 3-2. The unit dose factors included in the table were previously submitted to the DOH. The information required to develop the unit dose factors from the Clean Air Assessment Package 1988 (CAP-88) computer code was included in "Unit Dose Calculation Methods Summary of Facility Effluent Monitoring Plan Determinations" (WHC 1991).

**Table 3-2. Unabated Offsite Dose.**

| Radionuclide | CAP-88 Unit Dose Factor (mrem/Ci) | Annual Unabated Emissions (Ci/yr) | Annual Unabated Dose (mrem/yr) |
|---|---|---|---|
| C-14 | 1.65E-03 | 1.24E-05 | 2.05E-08 |
| Co-60 | 1.72E-02 | 1.15E-01 | 1.98E-03 |
| Se-79 | 2.60E-02 | 4.39E-07 | 1.14E-08 |
| Sr-89/90 | 2.60E-02 | 3.45E+01 | 8.97E-01 |
| Y-90 | 2.22E-04 | 3.45E+01 | 7.66E-03 |
| Tc-99 | 6.45E-04 | 1.46E-05 | 9.42E-09 |
| Ru/Rh-106 | 1.24E-02 | 9.70E-03 | 1.20E-04 |
| I-129 | 1.14E-01 | 2.53E-05 | 2.88E-06 |
| Cs-137 | 1.42E-02 | 5.47E+01 | 7.77E-01 |
| Ce-144 | 8.14E-03 | 1.15E-06 | 9.36E-09 |
| Eu-154 | 2.60E-04 | 7.49E-01 | 1.95E-04 |
| Nat.U | 1.69E+00 | 1.46E-03 | 2.47E-03 |
| Np-237 | 7.05E+00 | 9.30E-08 | 6.56E-07 |
| Pu-238 | 4.76E+00 | 1.99E-03 | 9.47E-03 |
| Pu-239/240 | 5.15E+00 | 3.02E-02 | 1.56E-01 |
| Pu-241 | 8.17E-02 | 1.20E-02 | 9.80E-04 |
| Am-241 | 7.79E+00 | 9.84E-07 | 7.67E-06 |
| Cm-242/244 | 4.12E+00 | 1.37E-08 | 5.64E-08 |
| **Total Dose** | | | **1.85E+00** |

## 4.0 Control and Monitoring Systems

This section contains information on both the emission control systems and the monitoring systems proposed for 244-U DCRT.

### 4.1 Control System

The 244-U DCRT facility ventilation system is depicted on drawing H-2-73838 and the filter design on H-2-73929, found in Appendix B. The proposed ventilation system maintains the receiver vessel and annulus at a negative pressure to prevent the uncontrolled release of airborne radioactive materials. Air enters the 244-U DCRT annulus via an intake system that includes a heater, pre-filter, and a HEPA filter bank. The heater warms the incoming air in cold weather to prevent the formation of ice on the inlet filters. The pre-filter inhibits particulates from entering the vault. The HEPA filter prevents a release of contamination if a backflow of annulus air occurs while the exhaust system is not operating. The heater turns on automatically when the outside air temperature drops to ≈4 °C. Interlocks shut off the heater when the exhaust fan is off or when one of the two over-temperature sensors are activated downstream of the heater.

The exhaust fan draws air from both the tank and the annulus on a common header at a minimum flowrate of 3.54 cubic meters per minute. The resistance to air flow into the annulus is less than into the tank, therefore, the tank will have negative pressure in relation to the annulus.

Air from the tank and annulus is exhausted through any binary combination of the three HEPA filter banks in the filter pit. Each filter bank contains a prefilter (35 percent collection efficiency) and two HEPA filters (99.95 percent collection efficiency). Exhaust air is heated upstream of the filter banks to prevent condensing moisture in the filter train. Differential pressure readings are taken upstream and downstream of each HEPA filter and are used to indicate their condition. Low differential pressure is interlocked to shut down the exhaust fan. High differential pressure is annunciated. The heater is interlocked to turn off when the exhaust fan shuts down. See Figure 4-1 for a three dimensional perspective of the abatement equipment physical layout.

### 4.2 Measurement System

The primary emission measurement system complies with 40 CFR 61, Subpart H and referenced requirements, and will consist of a near isokinetic sampling probe in accordance with the American National Standards Institute N13.1 with an air particulate record sampler. Additionally, a continuous air monitor (beta radiation) will be installed for process information. The primary ventilation system effluent flow rate shall be monitored by continuous measurement instrumentation certified in accordance with Title 40 CFR 52, Appendix E. Vendor information on this instrumentation is supplied in Appendix C.

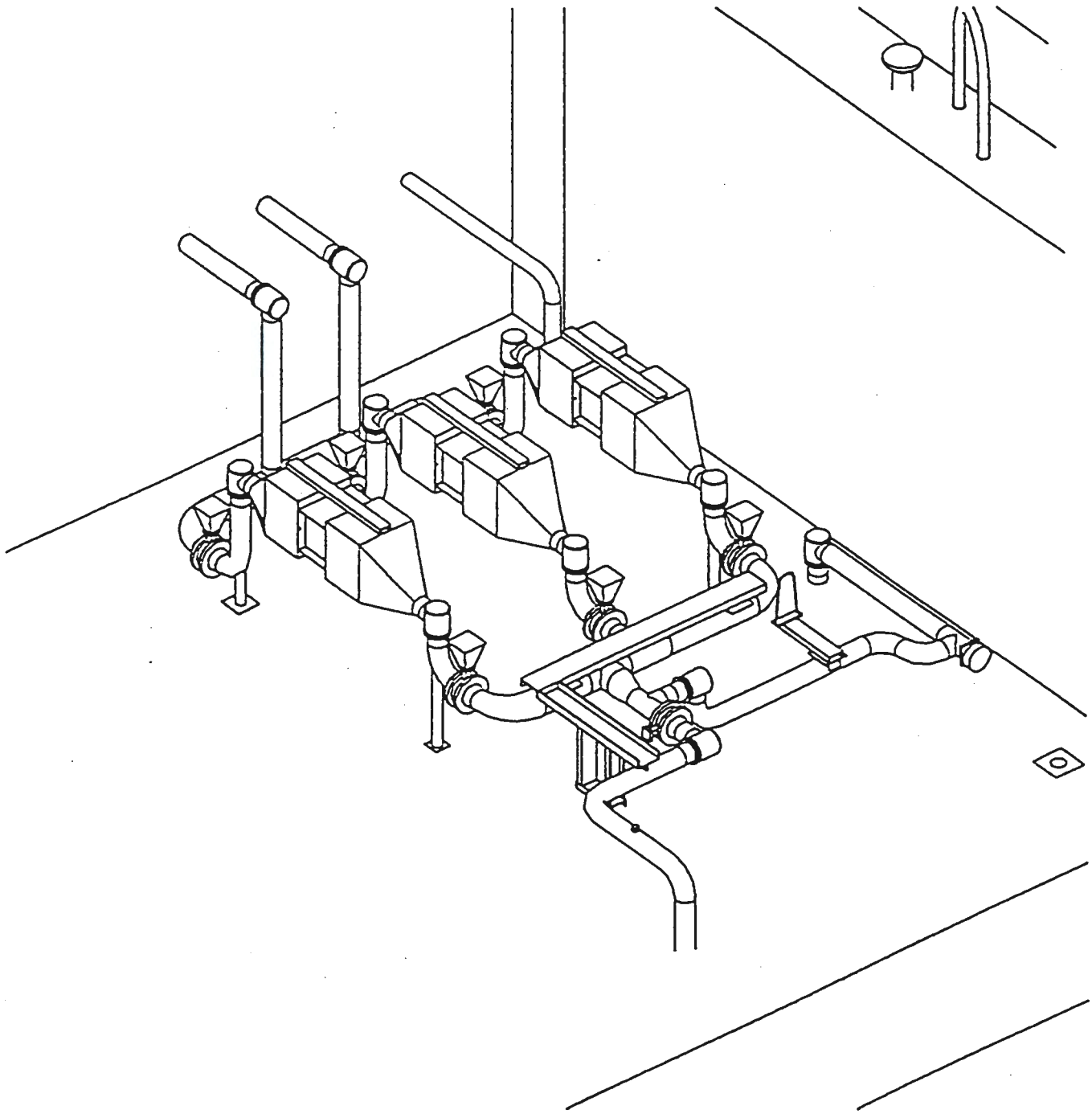

Figure 4-1. 3-D Perspective of 244-U Abatement Equipment.

## 5.0 Abated Release Rates

This section provides information regarding the emission release rates from the 244-U DCRT initial startup and continued operations with the emission control system in place. Also included is the EDE to the MEI offsite resulting from abated emissions.

### 5.1 Abated Emissions

Abated emissions, calculated using the decontamination factors associated with the control technology provided in the exhaust system, are shown in Table 5-1. An efficiency of 99.9 percent was used for each HEPA filter, for conservatism. Abated emissions are determined by dividing unabated emissions by the appropriate decontamination factor.

**Table 5-1. Abated Emissions.**

| Radionuclide | Annual Unabated Emissions (Ci/yr) | Decontamination Factors | Annual Abated Emissions (Ci/yr) |
|---|---|---|---|
| C-14 | 1.24E-05 | 1.00E+6 | 1.24E-11 |
| Co-60 | 1.15E-01 | 1.0E+06 | 1.15E-07 |
| Se-79 | 4.39E-07 | 1.0E+06 | 4.39E-13 |
| Sr-89/90 | 3.45E+01 | 1.0E+06 | 3.45E-05 |
| Y-90 | 3.45E+01 | 1.0E+06 | 3.45E-05 |
| Tc-99 | 1.46E-05 | 1.0E+06 | 1.46E-11 |
| Ru/Rh-106 | 9.70E-03 | 1 | 9.70E-03 |
| I-129 | 2.53E-05 | 1 | 2.53E-05 |
| Cs-137 | 5.47E+01 | 1.0E+06 | 5.47E-05 |
| Ce-144 | 1.15E-06 | 1.0E+06 | 1.15E-12 |
| Eu-154 | 7.49E-01 | 1.0E+06 | 7.49E-07 |
| Nat.U | 1.46E-03 | 1.0E+06 | 1.46E-09 |
| Np-237 | 9.30E-08 | 1.0E+06 | 9.30E-14 |
| Pu-238 | 1.99E-03 | 1.0E+06 | 1.99E-09 |
| Pu-239/240 | 3.02E-03 | 1.0E+06 | 3.02E-09 |
| Pu-241 | 1.20E-02 | 1.0E+06 | 1.20E-08 |
| Am-241 | 9.84E-07 | 1.0E+06 | 9.84E-13 |
| Cm-242/244 | 1.37E-08 | 1.0E+06 | 1.37E-14 |

## 5.2 Abated Dose

The abated dose to the MEI, located 24 kilometers east of the 200 West Area, is shown in Table 5-2. The unit dose factors included in the table are described in Section 3.2.

**Table 5-2. Abated Offsite Dose.**

| Radionuclide | CAP-88 Unit Dose Factor (mrem/Ci) | Annual Abated Emissions (Ci/yr) | Annual Abated Dose (mrem/yr) |
|---|---|---|---|
| C-14 | 1.65E-03 | 1.24E-11 | 2.05E-14 |
| Co-60 | 1.72E-02 | 1.15E-07 | 1.98E-09 |
| Se-79 | 2.60E-02 | 4.39E-13 | 1.14E-15 |
| Sr-89/90 | 2.60E-02 | 3.45E-05 | 8.97E-07 |
| Y-90 | 2.22E-04 | 3.45E-05 | 7.66E-09 |
| Tc-99 | 6.45E-04 | 1.46E-11 | 9.42E-15 |
| Ru/Rh-106 | 1.24E-02 | 9.70E-03 | 1.16E-05 |
| I-129 | 1.14E-01 | 2.53E-05 | 2.88E-06 |
| Cs-137 | 1.42E-02 | 5.47E-05 | 7.77E-07 |
| Ce-144 | 8.14E-03 | 1.15E-12 | 9.36E-15 |
| Eu-154 | 2.60E-04 | 7.49E-07 | 1.95E-11 |
| Nat.U | 1.69E+00 | 1.46E-09 | 2.47E-09 |
| Np-237 | 7.05E+00 | 9.30E-14 | 6.56E-14 |
| Pu-238 | 4.76E+00 | 1.99E-09 | 9.47E-09 |
| Pu-239/240 | 5.15E+00 | 3.02E-09 | 1.56E-09 |
| Pu-241 | 8.17E-02 | 1.20E-08 | 9.80E-10 |
| Am-241 | 7.79E+00 | 9.84E-13 | 7.67E-13 |
| Cm-242/244 | 4.12E+00 | 1.37E-14 | 5.64E-14 |
| **Total Dose** | | | **2.32E-05** |

The dose resulting from all Hanford Site operations in 1992 was determined to be 0.004 millirem per year (mrem/yr) for an individual located at Ringold (PNL 1993). The maximum emissions resulting from the 244-U DCRT, in conjunction with other operations at the Hanford Site, will not result in a violation of the National Emission Standards (40 CFR 61) (ten mrem/yr).

## 6.0 References

40 CFR 60, "Standards of Performance for New Stationary Sources," *Code of Federal Regulations*, as amended.

40 CFR 61, "National Emission Standards for Hazardous Air Pollutants," *Code of Federal Regulations*, as amended.

ANSI, 1969, *Guide to Sampling Airborne Radioactive Materials in Nuclear Facilities*, ANSI N13.1, New York, New York

Beres, D. A., 1990. *Clean Air Assessment Package -1988 (CAP-88). A Dose and Risk Assessment Methodology for Radionuclide Emissions to Air.* Volumes 1-3, U.S. Environmental Protection Agency, Washington, D.C.

*Hanford Federal Facility Agreement and Consent Order*, Fourth Amendment, January 1994.

PNL, 1993, *Hanford Site Environmental Report for Calendar Year 1992*, PNL-8682, UC-602, Pacific Northwest Laboratory, Richland, Washington.

WAC 246-247, "Radiation Protection - Air Emissions," *Washington Administrative Code*, as amended.

WHC, 1991, *Unit Dose Calculation Methods Summary of Facility Effluent Monitoring Plan Determinations*, WHC-EP-0498, Westinghouse Hanford Company, Richland Washington.

WHC, 1993, *Determination of the NESHAP Status of Tank Farm Stacks based on 40 CFR, Part 61, Appendix D Factors*, WHC-SD-WM-EMP-031, Westinghouse Hanford Company, Richland Washington.

WHC, 1993, *Radionuclide and Chemical Inventories for Single Shell Tanks*, WHC-SD-WM-TI-0565, Rev. 1, Westinghouse Hanford Company, Richland Washington.

WHC, 1993, *Tank Farm Surveillance and Waste Status Summary for June 1993*, WHC-EP-0182-63, Westinghouse Hanford Company, Richland Washington.

# APPENDIX A

## BARCT Discussion

**Appendix A - Best Available Radionuclide Control Technology (BARCT) Discussion**

The use of HEPA filtration on the ventilation used for this activity is proposed as BARCT. DOH has previously provided guidance that HEPA Filters are generally considered BARCT for particulate emission and well over 99 percent of the unabated dose resulting from the radionuclide emissions from this activity are particulates.

9413297.0389



# Appendix B

## 244-U Ventilation System Design Drawings

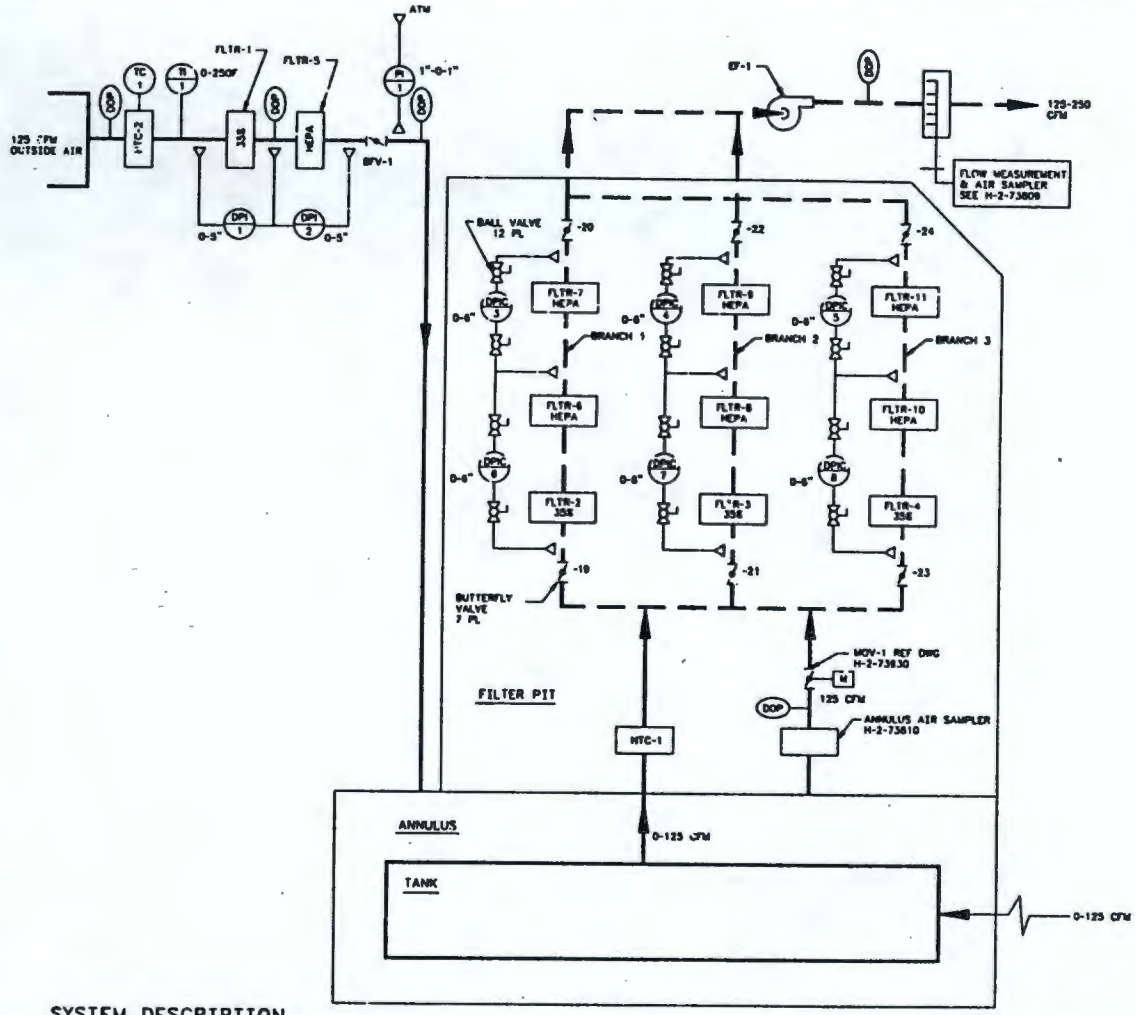


## AIR FLOW & CONTROL DIAGRAM

## INSTRUMENTATION LEGEND

| SYMBOL | DESCRIPTION |
|---|---|
| | SUPPLY AIR FLOW |
| | EXHAUST AIR FLOW |
| | SENSING TIP |
| | MANUAL BUTTERFLY VALVE |
| | CENTRIFUGAL FAN |
| | LOCAL MOUNTED INSTRUMENT |
| | PANEL MOUNTED INSTRUMENT |
| T | THERMOSTAT |
| | TEST PORT |

## INSTRUMENT IDENTIFICATION

| SYMBOL | 1st POSITION | 2ND & 3RD POSITION |
|---|---|---|
| D | DIFFERENTIAL | |
| I | | INDICATOR |
| | | |
| P | PRESSURE | PRESSURE |
| | | |
| T | TEMPERATURE | TEMPERATURE |
| | | |
| C | | CONTROLLER |

## GENERAL NOTES UNLESS OTHERWISE SPECIFIED

1. DOP PORTS: AS NOTED & SHOWN CONSIST OF 1" GALV HALF COUPLING WELDED TO DUCT OR PLENUM, AND FITTED WITH 1" HEX HEAD PLUGS.
2. STACK DRAIN LOCATED AS LOW AS POSSIBLE. WRAP HEAT TRACE CABLE IN DRAIN-STACK TO GATE VALVE INCLUDING 1'-0 AROUND GATE VALVE & 2'-0 AROUND STACK BOTTOM & INSULATE WITH 1/2" ARMAFLEX OR EQUAL. HEAT TRACE CABLE SHALL BE SELF-LIMITING, 120 VAC, 4 WATTS/FT AT 50° F, CHEMELEX 4 ATV1 AUTO-TRACE. SEE DWG H-2-73862 FOR 244-BX, H-2-73817 FOR 244-U, AND H-2-73801 SH 1 FOR 244-TX FOR DRAIN LINE CONTINUATION.

## SYSTEM DESCRIPTION

OUTSIDE AIR ENTERS THE ANNULUS THRU A PRE-FILTER AND HEPA FILTER. WHEN THE OUTSIDE AIR TEMPERATURE IS LESS THAN 40° F HTC-2 IS ENERGIZED BY TC-1. WHEN THE OUTSIDE AIR TEMPERATURE IS ABOVE 45° F HTC-2 IS DE-ENERGIZED BY TC-1. TI-1 INDICATES AIR TEMPERATURE AFTER PASSING THRU HTC-2. THE TANK IS TO BE ESSENTIALLY SEALED AND WILL ALLOW MINIMUM AIR FLOW. AIR EXHAUSTED FROM THE TANK IS HEATED BY HTC-1.

HTC-1 IS MANUALLY ENERGIZED BY ITS CIRCUIT BREAKER AND NEEDS NO ADDITIONAL CONTROLS. DIFFERENTIAL PRESSURE INDICATORS AND CONTROLLERS DPIC-6, 7 OR 8 WILL ACTIVATE AN ALARM ON HIGH PRESSURE DROP ACROSS FILTERS 6, 8, OR 10, INDICATING THAT SERVICE IS REQUIRED. DIFFERENTIAL PRESSURE INDICATORS AND CONTROLLERS DPIC-3, 4, OR 5 WILL SHUT DOWN EXHAUST FAN EF-1 UPON LOW DIFFERENTIAL PRESSURE, INDICATING A FILTER "BLOW-OUT".

KEY OPERATED SELECTOR SWITCHES WILL BE USED TO BY-PASS THE FAN EF-1 INTERLOCK ON THE FILTER BRANCH NOT BEING USED.

FAILURE OF HTC-1 WILL BE ANNUNCIATED.

AIR EXHAUSTED FROM THE TANK IS MIXED WITH ANNULUS AIR IN A COMMON HEADER. AIR IS EXHAUSTED THRU TWO FILTER JUMPERS OPERATING IN PARALLEL WITH A THIRD FILTER JUMPER PROVIDED FOR REDUNDANCY TO ALLOW FOR CONTINUOUS AIR FLOW DURING FILTER CHANGE OUT. EACH FILTER JUMPER HAS A PRE-FILTER AND 2 HEPA FILTERS IN SERIES. THE FILTER JUMPERS ARE DESIGNED FOR REMOTE MAINTENANCE. EF-1 IS DESIGNED NOT TO EXCEED 5.25 IN. WATER GAGE STATIC PRESSURE AT ANY FLOW RATE, THUS ALLOWING FOR AS MUCH AIR VOLUME AS POSSIBLE TO FLOW THRU THE ANNULUS WITHOUT EXCEEDING THE MAXIMUM TANK NEGATIVE PRESSURE OF 6 IN. WATER GAGE. THIS ALLOWS ALL BUTTERFLY VALVES (EXCEPT THE BUTTERFLY VALVE ISOLATING THE REDUNDANT FILTER JUMPER) TO BE WIDE OPEN FOR NORMAL OPERATING CONDITIONS. THE TANK AND ANNULUS ARE TO BE KEPT AT A NEGATIVE PRESSURE WITH RESPECT TO THE ATMOSPHERE.

WHEN ACCESS PORTS IN THE TANK OR ANNULUS ARE TO BE OPENED, OPEN ALL BUTTERFLY VALVES TO ALLOW AIR TO FLOW THRU ALL FILTER JUMPERS. IF PRESSURE DROP ACROSS A FILTER JUMPER IS HIGH, IT SHOULD BE REPLACED BEFORE AN ACCESS PORT IS OPENED. FOR ACCESS PORTS LARGER THAN 12 IN DIAMETER, EXTRA VENTILATION IS NEEDED TO MAINTAIN CAPTURE VELOCITIES.

EXHAUST FLOW RATE IS RECORDED AND SAMPLED FOR RADIATION PRIOR TO RELEASE TO THE ATMOSPHERE.

| DWG NO | TITLE |
|---|---|
| DRAWING TRACEABILITY LIST | |

| REF NUMBER | TITLE |
|---|---|
| H-2-73839 | HVAC PLANS & DETAILS |
| H-2-73780 | DRAWING LIST |

REFERENCES

NEXT USED ON H-2-73839

| REVISIONS | | | | | | |
|---|---|---|---|---|---|---|
| 1 | REVISED PER ECN 108679 | | | | | |

CAETILE B073838A

LOCODE DOS.6.00.ACD7.12.55

ESSENTIAL DRAWING

| | | |
|---|---|---|
| W.M. LAWTON | 10/78 | |
| F. DALPIAZ | 11/78 | |
| L.M. SMITH | 11/79 | |
| M. LAWTON | 4/78 | |
| IMA GARCIA | 4/78 | |
| F.F. STURLEY | 4/78 | |
| J.D. GALBRAITH | | |

U.S. DEPARTMENT OF ENERGY
Richland Operations Office
Westinghouse Hanford Company

# HVAC AIRFLOW AND CONTROL DIAGRAM AND SCHEDULE

F | 244-BX, TX & U | 6900 | H-2-73838 | 7

SCALE NONE



9413297.0390

## FILTERS

| | FILTER NO. | DESIGN CFM | SIZE (INCHES) | ARRANGEMENT HIGH | ARRANGEMENT WIDE | ARRANGEMENT NO. | RESISTANCE IN. WG INITIAL | RESISTANCE IN. WG MAX FINAL | TEST AND RATING | REMARKS |
|---|---|---|---|---|---|---|---|---|---|---|
| | FLTR-1 | 125 | 24 X 24 X 2 | 1 | 1 | 1 | 0.01 | 0.25 | 35% ASHRAE | UL CLASS 2 LISTING SEE NOTE 2 |
| SEE NOTE 1 | FLTR-2 | | 12 X 12 X 2 | | | | 0.05 | 0.25 | | SEE NOTE 3 |
| SEE NOTE 1 | FLTR 3 | | 12 X 12 X 2 | | | | 0.05 | 0.25 | | SEE NOTE 3 |
| SEE NOTE 1 | FLTR-4 | | 12 X 12 X 2 | | | | 0.05 | 0.25 | 35% ASHRAE | SEE NOTE 3 |
| | FLTR 5 | | 24 X 24 X 20 | | | | 0.13 | 0.75 | 99.97% DOP | MSA SELF-CONTAINED |
| SEE NOTE 1 | FLTR 6 | | 12 X 12 X 5 7/8 | | | | 0.83 | 1.75 | | PER HPS 151-M TYPE "C" |
| | FLTR-7 | | | | | | | 1.00 | | |
| | FLTR-8 | | | | | | | 1.75 | | |
| | FLTR 9 | | | | | | | 1.00 | | |
| | FLTR 10 | | | | | | | 1.75 | | |
| SEE NOTE 1 | FLTR-11 | 125 | 12 X 12 X 5 7/8 | 1 | 1 | 1 | 0.83 | 1.00 | 99.97% DOP | PER HPS 151-M TYPE "C" |

1. THESE ITEMS SHOWN FOR INFORMATION ONLY SEE DWG H-2-73828 FOR INSTALLATION
2. HOLDING FRAME FARR TYPE B W/2 70 FSTNR
3. REF DWG H-2-73829

## CENTRIFUGAL FAN

| EQUIP NO. | CFM | SP, REF TO STD COND IN. WG | MECH EFF (% MIN) | WHEEL TYPE | ROTATION DISCHARGE | DRIVE DATA | | MOTOR (TEFC) HP | RPM | VOLTS | PH | HZ | REMARKS |
|---|---|---|---|---|---|---|---|---|---|---|---|---|---|
| EF-1 | 250 | 5.25 SEE NOTE 1 | 60 | FORWARD CURVED | CLOCKWISE BOT ANG UP | DIRECT | | 1 | 3600 | 460 | 3 | 60 | KLEEN STEEL MODEL KS-FC B X 2-1HP |

1. MAX FAN DEVELOPED SP SHALL NOT EXCEED 5.25 IN. WG AT OPREATING RPM AT ANY FLOW RATE.

## POWER ROOF VENTILATOR

| EQUIP NO. | DESIGN CFM | SP IN. WG | TYPE | DRIVE | MOTOR HP | RPM | VOLTS | PH | HZ | REMARKS |
|---|---|---|---|---|---|---|---|---|---|---|
| EF-2 | 590 | 0.25 | CENTRIFUGAL | DIRECT | 1/6 | 1260 | 120 | 1 | 60 | EXIT AIRE #CX-1233 WITH BIRDSCREEN & BACKDRAFT DAMPER |

1. EF-2 IS THERMOSTATICALLY CONTROLLED (SET POINT 110 F). THE MANUAL OVERRIDE SWITCH WILL OPERATE ONLY WHEN THE LIGHTS ARE ON.
2. HONEYWELL L4008D1043 THERMOSTAT IS MOUNTED ON CEILING

## BUTTERFLY VALVES

| EQUIP NO | CFM | SIZE | AIR TEMP | OPERATOR | MFR & MODEL | REMARKS |
|---|---|---|---|---|---|---|
| BFV-1 | 125 | 12" | 70 F | MANUAL | KEYSTONE FIG 100-805 | ANNULUS INTAKE VALVE |

## CONTROL & INDICATOR SCHEDULE

| EQUIP NO | MFR & MODEL | RANGE | SWITCHING | DEAD BAND | ELEC | ADDITIONAL DATA | NAMEPLATE NOMENCLATURE |
|---|---|---|---|---|---|---|---|
| DPIC 2,4, 5,6,7,8 | DWYER SER #3000, MODEL #3006 | 0-6" WC | SPDT | — | 120V 10A | #1, 60HZ | PHOTOHELIC DIFF PRESS SW/GAGE |

## ELECTRIC UNIT HEATER

| EQUIP NO. | CFM | BTUH | KW | VOLTS | PHASE | HERTZ | MOTOR HP | RPM | MFR | REMARKS |
|---|---|---|---|---|---|---|---|---|---|---|
| UH-1 | 280 | 13,650 | 4 | 480 | 3 | 60 | 1/50 | 1100 | MARKEL PRECTICA | INTERNAL THERMOSTAT INCLUDED |

1. SET THERMOSTAT AT 50°F

## ELECTRIC HEATING COIL

| EQUIP NO. | CFM | KW | STAGES | ELEC V | PH | HZ | REMARKS |
|---|---|---|---|---|---|---|---|
| HTC-1 | 0-125 | 1 | 1 | 120 | 1 | 60 | NOEECO SEE NOTE 3 |
| HTC-2 | 125 | 1.5 | 1 | 240 | 1 | 60 | NOEECO SERIES 2814 NO 1.5 |

1. HTC-1 IS TO BE ENERGIZED BY ITS CIRCUIT BREAKER HTC-1 IS DESIGNED TO WITHSTAND CONDITIONS OF NO AIR FLOW TO FULL AIR FLOW WITHOUT DAMAGE.
2. HTC-2 TO HAVE THERMOSTAT TC-1 SET AT 45 F, AND JUNCTION BOX.
3. 25-INT-22-L-1.360W-120V-B-36" STEEL FITTING ALL WELDED CONSTRUCTION HYDROTEST AT 400 PSIG BLADE LENGTH = 36 INCHES, A 2 ELEMENT UNIT.

FOR GENERAL NOTES SEE SHEET 1

ESSENTIAL DRAWING

| REV | DATE | DRAWN | CHECKED | APPROVED |
|---|---|---|---|---|
| 1 | REV PER ECN 168885 | KSC | DT | |

REVISIONS

CADFILE H0738188 CADCODE 11 THU ACD2 10 55

DRAWING TRACEABILITY LIST: DWG NO | TITLE

REFERENCES: REF NUMBER | TITLE

WERE USED ON

S.T. CURY 6-27-95
CT HORRS 6-28-95
MD COLEMAN 6-27-95
JR KRASNOWICH 6-27-95

ECN 155507

U.S. DEPARTMENT OF ENERGY
Richland Operations Office
Westinghouse Hanford Company

HVAC AIR FLOW AND CONTROL DIAGRAM AND SCHEDULE

F | 24x36 TE & G | 8900 | H-2-73838 | 1

NONE

FOR FIELD VERIFICATION STATUS SEE H-2-73829

Enclosure
Page 26 of 49

9413297.0929

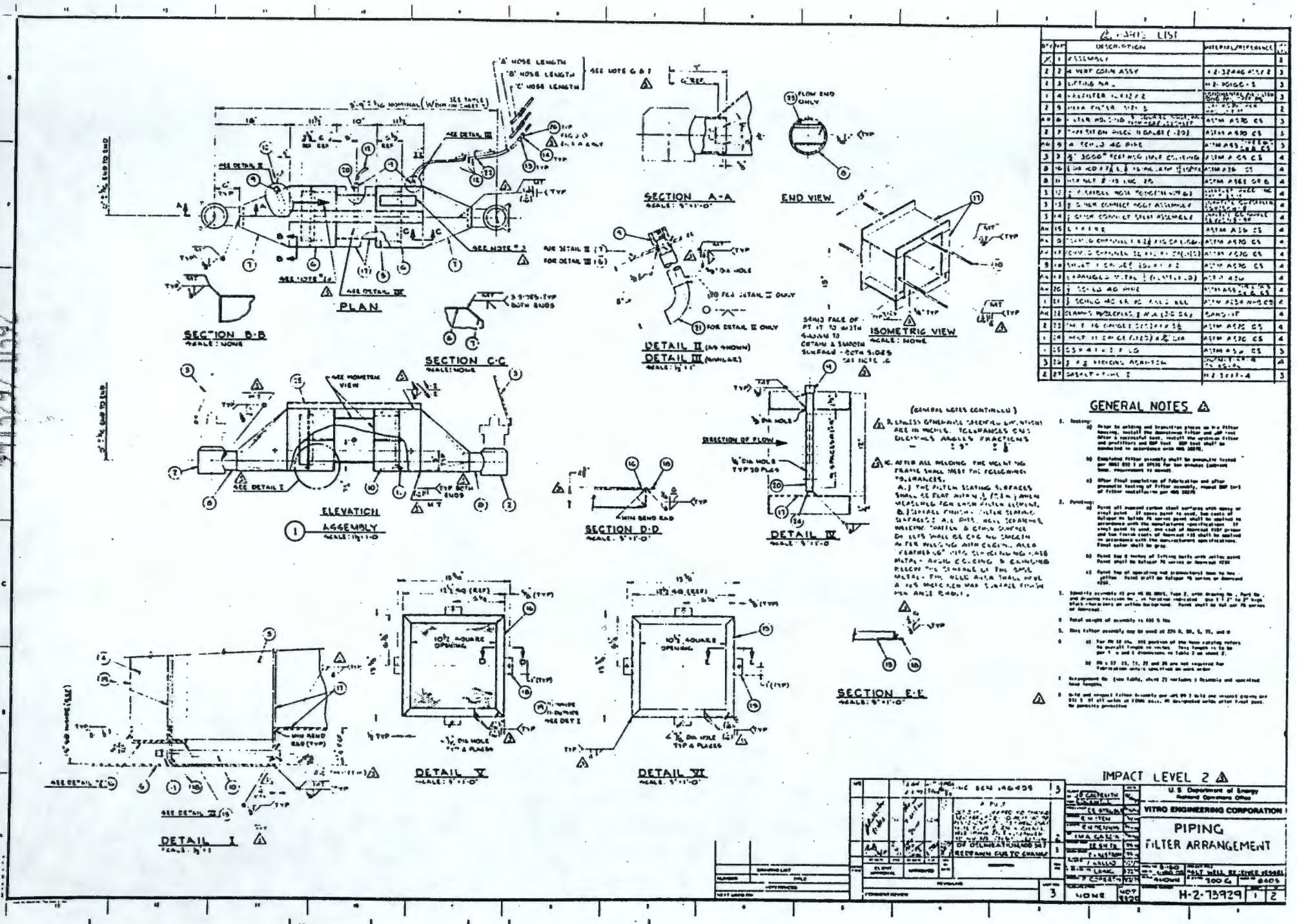


9413297.0392

| ARRGMT | LENGTH "A" NOSE | LENGTH "B" NOSE | LENGTH "C" NOSE | W* SECTION MODULE | WHERE USED | ARRGMT DWG NO | REMARKS |
|---|---|---|---|---|---|---|---|
| NORTH -10 | 330" (28'-2") | 298" (24'-7") | 148" (12'-3") | | 244AN RECEIVER VAULT | H-2-73872 | |
| CENTER -11 | 210" (18'-2") | 202" (16'-10") | 190" (15'-10") | | 244AN RECEIVER VAULT | H-2-73874 | |
| SOUTH -12 | 225" (19'-3") | 192" (16'-0") | 197" (16'-5") | | 244AN RECEIVER VAULT | H-2-73872 | |
| △ NORTH -13 | 216" (18'-0") | 93" (7'-9") | 68" (5'-8") | | 244AN RECEIVER VAULT | H-2-73872 | |
| △ CENTER -14 | 2[illegible]" (1[illegible]'-2") | 199" (16'-7") | 19" (1'-7") | | 244AN RECEIVER VAULT | H-2-73872 | |
| △ SOUTH -15 | 192" (16'-0") | 93" (7'-9") | 68" (5'-8") | | 244AN RECEIVER VAULT | H-2-73872 | |
| △ NORTH -16 | [illegible] (9'-0") | 120" (10'-0") | 56" (4'-8") | | 244U RECEIVER VAULT | H-2-73872 | |
| △ CENTER -17 | 85" (7'-1") | 85" (7'-1") | 33" (2'-9") | | 244U RECEIVER VAULT | H-2-73872 | |
| △ SOUTH -18 | 180" (15'-0") | 180" (15'-0") | 180" (15'-0") | | 244U RECEIVER VAULT | H-2-73872 | |
| △ NORTH -19 | 40" (3'-3") | 33" (2'-9") | 33" (2'-9") | | 244S CATCH STATION | H-2-71037 | |
| △ CENTER -20 | 180" (15'-0") | 48" (4'-0") | 180" (15'-0") | | 244S CATCH STATION | H-2-71037 | |
| △ NORTH -21 | 84 (7'-0") | 60" (5'-0") | 54 (4'-6") | | 244A LIFT STATION | H-2-58255 | |
| △ SOUTH -22 | 120 (10'-0") | 36" (3'-0") | 56 (4'-8") | | 244A LIFT STATION | H-2-58255 | |
| -23 | | | | | | | |
| -24 | | | | | | | |
| -25 | | | | | | | |
| -26 | | | | | | | |
| -27 | | | | | | | |

* THIS DATA IS ACTUAL AS-BUILT DIM FOR EACH FILTER APPLICATION

IMPACT LEVEL -

| | |
|---|---|
| CLIENT APPROVAL | U.S. Department of Energy Richland Operations Office |
| | VITRO ENGINEERING CORPORATION |
| | PIPING FILTER ARRANGEMENT |
| SCALE NONE | 1 DATE 2004 |
| NONE | H-2-73429 |

| | | | |
|---|---|---|---|
| H-2-13740 | DRAWING LIST | | |
| | REFERENCES | | |
| NEXT USE ON | | | |

| | | | |
|---|---|---|---|
| 2 | | | |
| 1 | | | |
| REVISIONS | | | |
| COMMENT REVISION | | | |

9413297.0393

# Appendix C

## 244-U Monitoring System Design

AIR MONITOR CORPORATION
1050 Hopper Avenue • Santa Rosa, CA 95403

MAIL TO: Corporate Offices
P.O. Box 6358
Santa Rosa, CA 95406
Tel: (707) 544-2706
Fax: (707) 526-9970

**Kaiser Engineers Hanford**
**244-U Double Containment Receiver Tank**
**P.O. No. 74718**
**AMC W.O. No. 21592**

## DESIGN CRITERIA AND DATA
**Particulate Record Sample**

| | |
|---|---|
| Stack Size: | 6.065" I.D. (0.20063 Sq. Ft. Area) |
| Stack Construction: | 6" Sch. 40 Pipe |
| Stack Air Volume: | Maximum - 275 SCFM<br>Normal (design) - 250 SCFM<br>Minimum - 125 SCFM |
| Stack Air Velocity: | Maximum - 1370.68 SFPM<br>Normal (design) - 1246.07 SFPM<br>Minimum - 623.04 SFPM |
| Stack Air Temperature Range: | 55°F to 200°F |
| Sample Air Volume: | Maximum - 2.076 SCFM<br>Normal (design) - 1.888 SCFM<br>Minimum - 0.944 SCFM |
| Number of Sampling Probes: | 1 |
| Number of Nozzles Per Probe: | 1 |
| Sample Nozzle Size: | 0.527" I.D. |
| Sample Line Size: | 1¼" diameter tubing with 0.065" wall 316 SST (1.12" I.D.) |
| Stack Flow Transmitter Full Range: | 0 - 275 SCFM |
| Sample Flow Transmitter Full Range: | 0 - 2.08 SCFM |
| Number of Flow Probes: | 1 |
| Number of Flow Sensors: | 4 |

AIR MONITOR CORPORATION
1050 Hopper Avenue • Santa Rosa, CA 95403

MAIL TO: Corporate Offices
P.O. Box 6358
Santa Rosa, CA 95406
Tel: (707) 544-2706
Fax: (707) 526-9970

**Kaiser Engineers Hanford**
**244-U Double Containment Receiver Tank**
**P.O. No. 74718**
**AMC W.O. No. 21592**

## DESIGN CRITERIA AND DATA
## Beta and Gamma Radiation Monitor Sample

| | |
|---|---|
| Stack Size: | 6.065" I.D. (0.20063 Sq. Ft. Area) |
| Stack Construction: | 6" Sch. 40 Pipe |
| Stack Air Volume: | Maximum - 272.924 SCFM<br>Normal (design) - 248.112 SCFM<br>Minimum - 124.056 SCFM |
| Stack Air Velocity: | Maximum - 1360.33 SFPM<br>Normal (design) - 1236.66 SFPM<br>Minimum - 618.33 SFPM |
| Stack Air Temperature Range: | 55°F to 200°F |
| Sample Air Volume: | Maximum - 2.061 SCFM<br>Normal (design) - 1.873 SCFM<br>Minimum - 0.937 SCFM |
| Number of Sampling Probes: | 1 |
| Number of Nozzles Per Probe: | 1 |
| Sample Nozzle Size: | 0.527" I.D. |
| Sample Line Size: | 1¼" diameter tubing with 0.065" wall 316 SST (1.12" I.D.) |
| Stack Flow Transmitter Full Range: | 0 - 275 SCFM |
| Sample Flow Transmitter Full Range: | 0 - 2.061 SCFM |

AIR MONITOR CORPORATION
1050 Hopper Avenue • Santa Rosa, CA 95403

MAIL TO: Corporate Offices
P.O. Box 6358
Santa Rosa, CA 95406
Tel: (707) 544-2706
Fax: (707) 526-9970

**Kaiser Engineers Hanford**
**244-U Double Containment Receiver Tank**
**P.O. No. 74718**
**AMC W.O. No. 21592**

## DESIGN CRITERIA AND DATA
Annulus Sample

| | | |
|---|---|---|
| Sample Air Temperature Range: | 55°F to 200°F | |
| Sample Air Volume: | Maximum | - 2.2 SCFM |
| | Normal (design) | - 2.0 SCFM |
| Sample Air Velocity: | Maximum | - 2946.39 FPM |
| | Normal (design) | - 2678.54 FPM |
| Sample Line Size: | ½" diameter tubing with 0.065" wall 316 SST (.0007467" Sq. Ft. Area) | |

AIR MONITOR CORPORATION
1050 Hopper Avenue • Santa Rosa, CA 95403

MAIL TO: Corporate Offices
P.O. Box 6358
Santa Rosa, CA 95406
Tel: (707) 544-2706
Fax: (707) 526-9970

Kaiser Engineers Hanford
244-U Double Containment Receiver Tank
P.O. No. 74718
AMC W.O. No. 21592

## DATA LOGGER

| Ch. No. | Description | Input |
|---|---|---|
| 1 | Exhaust Stack Flow, 0 - 275 SCFM | 0 - 5 VDC |
| 2 | Exhaust Stack Temperature, 0 - 200°F | 0 - 5 VDC |
| 3 | Record Sample Flow, 0 - 2.08 SCFM | 0 - 5 VDC |
| 4 | Record Sample Temperature, 0 - 200°F | 0 - 5 VDC |
| 5 | Beta/Gamma Sample Flow, 0 - 2.06 SCFM | 0 - 5 VDC |
| 6 | Beta/Gamma Sample Temperature, 0 - 200°F | 0 - 5 VDC |
| 7 | Exhaust Stack Beta/Gamma, High-Radiation Alarm | On / Off |
| 8 | Exhaust Stack Beta/Gamma Activity, CPM | 0 - 5 VDC |
| 9 | Exhaust Stack Beta/Gamma, Monitor Failure Alarm | On / Off |
| 10 | Sample Manifolds Static Pressure, 0 -12" Hg | 0 - 5 VDC |
| 11 | Vacuum Pump 1, On/Off Status | On / Off |
| 12 | Vacuum Pump 2, On/Off Status | On / Off |
| 13 | Vacuum Pump Failure | On / Off |
| 14 | Exhaust Stack Fan, On/Off Status | On / Off |
| 15 | Exhaust Stack Beta/Gamma, Monitor in Calibration | On / Off |
| 16 | Annulus Sample Flow, 0 - 2.20 SCFM | 0 - 5 VDC |
| 17 | Annulus Sample Temperature, 0 - 200°F | 0 - 5 VDC |
| 18 | Annulus Beta/Gamma Activity, CPM | 0 - 5 VDC |
| 19 | Annulus Beta/Gamma, High-Radiation Alarm | On / Off |
| 20 | Annulus Beta/Gamma, Monitor Failure Alarm | On / Off |
| 21 | Annulus Beta/Gamma, Monitor in Calibration | On / Off |
| 22 | Beta/Gamma Sample Flow, Non-isokinetic | N/A |
| 23 | Record Sample Flow, Non-isokinetic | N/A |
| 24 | Spare | |

Additionally, the following inputs will be totalized by the Data Logger:

| | | |
|---|---|---|
| T1 | Exhaust Stack Volume, SCF | 0 - 5 VDC |
| T2 | Record Sample Volume, SCF | 0 - 5 VDC |
| T3 | Beta/Gamma Sample Flow Volume, SCF | 0 - 5 VDC |

Data Logger will provide alarms (through Alarm Relay 3 on Alarm Card), in addition to those listed, of the following conditions for remote use:

1. Pump Failure Alarm

AIR MONITOR CORPORATION
1050 Hopper Avenue • Santa Rosa, CA 95403

MAIL TO: Corporate Offices
P.O. Box 6358
Santa Rosa, CA 95406
Tel: (707) 544-2706
Fax: (707) 526-9970

# SEQUENCE OF OPERATION

## Continuous Air Monitoring System for 244-U Double Containment Receiver Tank Kaiser Engineers Hanford Contract No. 74718 AMC W.O. No. 21592

The Continuous Air Monitoring System measures the airflow of the DCRT exhaust stack and withdraws isokinetic samples for record purposes and for Beta/Gamma activity detection. Additionally the system withdraws an air sample from the Annulus of the DCRT for Beta/Gamma activity detection.

System provides means for recording data on various system parameters and alarming when these parameters exceed limits.

System is housed in two environmentally controlled NEMA 4 cabinets, one for Exhaust Stack Monitoring and one for Annulus Monitoring.

## DCRT EXHAUST STACK

### Power Distribution

Electrical power to the cabinet is provided by two separate 120 VAC lines. All instrumentation, control equipment and pumps are powered by one line connected at terminals 1, 2, and 3 of TB-1 and switched through SW-1 and SW-2. Transformers T-1 and T-2 provide required 24 VAC power from 120 VAC.

Environmental control equipment is powered by the second line connected at terminals 4, 5, and 6 of TB-1 and switched through SW-3. Utility box S-1/-2 from which the air conditioner receives its power is additionally switched through SW-5. Heaters installed in stack mounted cabinets are also powered from this line via terminals 61 through 66 of TB-5 and switched through SW-4.

## Exhaust Stack Flow Measurement

Exhaust Stack flow rate is determined by total and static pressure signals generated by flow measuring probe FE-1 and sent to stack massflow transmitter FT-1 (FT-244U-3). Density compensation is performed by FT-1 (FT-244U-3) using a stack temperature signal from a 100 ohm platinum RTD TE-1 and a temperature transmitter TT-1 (TT-244U-3) located in FT-1 (FT-244U-3). By compensating for variations in temperature, the output (0-5 VDC) of FT-1 (FT-244U-3) is linear to stack massflow and sent to Data Logger (XR-244U-1) channel #1 and Control Module (XY-244U-1) input #5. FT-1 (FT-244U-3) can display stack massflow (SCFM), velocity (SFPM) or temperature (°F) on its integral LED FI-1 (FI-244U-3).

Additionally, a stack temperature signal from FT-1 (FT-244U-3) is sent to Data Logger (XR-244U-1) channel #2 .

## Sample Flow Measurement

A vacuum pump system creates a manifold vacuum that will withdraw record sample SP-2 and Beta/Gamma sample SP-3 from the exhaust stack.

Sample SP-2 is withdrawn from the exhaust stack via a 0.527" I.D. nozzle into 1¼" od x 0.065" w manifold which in turn connects to a record sample filter holder where particulates are deposited on a 47mm filter paper and iodine is captured by a silver impregnated zeolite cartridge. This record sample filter holder is housed in a NEMA 4 cabinet mounted on the side of the exhaust stack.

After exiting filter holder and cabinet, sample SP-2 enters exhaust stack monitoring cabinet at bulkhead C.

Sample SP-3 is withdrawn via a 0.527" I.D. nozzle into 1¼" od x 0.065" w manifold which in turn connects to an Eberline remote Beta/Gamma detector head (RSH-244U-2) housed in a separate NEMA 4 cabinet mounted on the side of the exhaust stack.

After exiting the Beta/Gamma detector head (RSH-244U-2) and cabinet, sample SP-3 enters exhaust stack monitoring cabinet at bulkhead D.

Samples SP-2 and SP-3 enter the exhaust stack monitoring cabinet through isolation valves HV-7 and HV-8 respectively, and then into LO-flo measuring stations FE-2 (FE-244U-4) and FE-3 (FE-244U-5).

Sample flow rate for SP-2 (-3) is determined by total and static pressure signals generated at LO-flo FE-2 (-3) [FE-244U-4 (-5)] and sent to sample massflow transmitter FT-2 (-3) [FT-244U-4 (-5)].

Density compensation is performed by FT-2 (-3) [FT-244U-4 (-5)] using a sample temperature signal and an absolute sample pressure signal.

The sample temperature signal is generated by a 100 ohm platinum RTD TE-2 (-3) [TE-244U-4 (-5)] located in FE-2 (-3) [FE-244U-4 (-5)] and a temperature transmitter TT-2 (-3) [TT-244U-4 (-5)] located in FT-2 (-3) [FT-244U-4 (-5)].

The absolute sample pressure signal is generated by an absolute pressure transmitter PT-2 (-3) [PT-244U-4 (-5)] located in FT-2 (-3) [FT-244U-4 (-5)], which senses the pressure by connection to the static pressure line in FT-2 (-3) [FT-244U-4 (-5)].

By compensating for variations in sample air density, the output (0-5 VDC) of FT-2 (-3) [FT-244U-4 (-5)] is linear to massflow, and sent to Data Logger (XR-244U-1) channel #3(5) and Control Module (XY-244U-1) input 6 (7).

FT-2 (-3) [FT-244U-4 (-5)] can display sample massflow (SCFM), velocity (SFPM), temperature (°F), or absolute pressure (Hg") on its integral LED FI-2 (-3) [FI-244U-4 (-5)].

Additionally, a sample temperature signal from FT-2 (-3) [FT-244U-4 (-5)] is sent to Data Logger (XR-244U-1) channel #4(6).

## Sample Flow Control

Sample flow control is accomplished by the Control Module (XY-244U-1) and flow control valves FCV-2 (-3) [FV-244U-4 (-5)].

The Control Module (XY-244U-1) compares the stack massflow signal (0-5 VDC) from FT-1 (FT-244U-3) to each sample massflow signal (0-5 VDC ) from FT-2 (-3) [FT-244U-4 (-5)] and issues separate 0-10 VDC signals to sample flow control valves FCV-2 (FV-244U-4) and FCV-3 (FV-244U-5) to modulate sample flow SP-2 and SP-3 until signal from FT-2 (-3) [FT-244U-4 (-5)] equals signal from FT-1 (FT-244U-3), balancing the Control Module (XY-244U-1) output.

This control will allow sample flows for SP-2 and SP-3 to remain isokinetic to stack flow as stack flow conditions vary.

## Sample Flow Alarms

When either record sample flow SP-2 or Beta/Gamma Sample SP-3 exceed 10% over or under the required flow to remain isokinetic with Exhaust Stack for more than 5 minutes, Data Logger (XR-244U-1) will alarm on channels #22 & 23 and energize relays R-1 and R-2 (KSP-244-U). R-1 illuminates DS-4 **"Common Fault Alarm"** light and R-2 (KSP-244-U) provides alarm condition at terminals 29 and 30 of TB-3 for remote use.

Data Logger (XR-244U-1) performs this function by comparing signal (0-5 VDC) from FT-1 (FT-244U-3) and signals (0-5 V) from FT-2 and FT-3 and performing the following calculation:

Channel #22

$$\frac{|FT\text{-}1\ (FT\text{-}244U\text{-}3)\ -\ FT\text{-}2\ (FT\text{-}244U\text{-}4)|}{FT\text{-}1\ (FT\text{-}244U\text{-}3)} \leq 0.10$$

Channel #23

$$\frac{|FT\text{-}1\ (FT\text{-}244U\text{-}3)\ -\ FT\text{-}3\ (FT\text{-}244U\text{-}5)|}{FT\text{-}1\ (FT\text{-}244U\text{-}3)} \leq 0.10$$

Alarm occurs when inequality occurs.

Alarm condition is cleared only when isokinetic flow resumes.

**Static Pressure Control**

The manifold vacuum is measured by pressure transmitter PT-4 (PT-244U-6), which issues a linear signal to Data Logger (XR-244U-1) channel #10 and is displayed on integral LED PI-4 (PI-244U-6) in inches of mercury.

Pressure controller PC-4 (PC-244U-6) also receives this signal which is compared to a preset adjustable setpoint from HC-4 (HC-244U-6) and issues a 0-10 VDC signal to pressure control valve PCV-4 (PCV-244U-1) to modulate manifold vacuum.

**Vacuum Pump System**

Vacuum pump 1 (SP-244U-2) or 2 (SP-244U-3) provides the manifold vacuum by which samples SP-2 and SP-3 are withdrawn from the exhaust stack.

Two pumps are provided for redundant purposes and are controlled by an auto pump control system.

Pump start/stop initiation is interlocked with the stack exhaust fan on/off status through relay K-1 (M-244U-4). Pushbutton PB-2 "Pump Swap" provides a means of changing a pump's status from lead to standby. By momentarily pressing PB-2, the pump selected by the Control Module (XY-244U-1) to be lead will become standby and standby pump will become lead.

Pressure switches PS-1 (PS-244U-3) and PS-2 (PS-244U-4) are provided to sense for pump failure. Vacuum relief valves VRV-1 (VRV-244U-3) and VRV-2 (VRV-244U-4) are provided to protect vacuum pumps 1 (SP-244U-2) and 2 (SP-244U-3) from failure in case of airflow starvation. Vacuum gauge PI-1 (PI-244U-7) provides visual indication of manifold vacuum pressure in inches of mercury.

Two automatic isolation valves MOV-1 (MOV-244U-3) and MOV-2 (MOV-244U-4) provide pump intake and exhaust swing over from one pump to other in case of pump failure or swapping of pumps.

Pump motors are provided with an internal thermal overload protector that shut motor off under conditions of high temperature. Overload is self-correcting.

**Auto Pump Control**

For purposes of clarity, this sequence will conform to the normal state of all devices as shown on reference drawings. Also it is assumed pump 1 (SP-244U-2) is the lead pump.

With required power on, control valves FCV-2 (FV-244U-4), FCV-3 (FV-244U-5), and PCV-4 (PCV-244U-1), shall go to their normal state position, as dictated by their valve action switch (position A or B).

When an exhaust stack fan "On" signal is received at terminals 41 and 42 of TB-3 relay K-1 (M-244U-4) will be energized closing its two sets of N.O. contacts. One set of K-1's (M-244U-4) closed contacts signal Data Logger (XR-244U-1) channel #14 that stack exhaust fan is on. The other set of contacts combined with PB-1 in the **"Start"** position will send a signal to Control Module (XY-244U-1) input #1 which will initiate its start sequence.

First, Control Module (XY-244U-1) will close N.O. contacts of output #1 allowing isolation valves MOV-1 (MOV-244U-3) and MOV-2 (MOV-244U-4) to position themselves to pump 1 (SP-244U-2).

After 30 seconds (for the valves to fully position to Pump 1 (SP-244U-2)) Control Module (XY-244U-1) will close N.O. contacts of output #2 energizing relay K-2 and illuminating DS-2 (SP-244U-2) **"Pump 1 On"** light. When energized, K-2 closes two sets of N.O. contacts, starting vacuum pump 1 (SP-244U-2) and signalling Data Logger (XR-244U-1) channel #11 that Pump 1 (SP-244U-2) is on.

As vacuum pump 1 (SP-244U-2) starts running, it creates sufficient vacuum to activate pressure switch PS-1 (PS-244U-3), opening its N.C. contacts. Control Module (XY-244U-1) allows 5 seconds for this to occur after starting vacuum pump 1 (SP-244U-2).

Vacuum pump 1 (SP-244U-2) will continue to run until a pump failure occurs or the system is manually shut down. Failure of vacuum pump 1 (SP-244U-2) to produce sufficient vacuum (through stopping or leakage) will be detected by pressure switch PS-1 (PS-244U-3), which will close its N.C. contacts signalling the Control Module (XY-244U-1) that a failure has occurred.

Upon receiving the failure signal, Control Module (XY-244U-1) will immediately open N.O. contacts of output #1 and #2, de-energizing K-2 which will remove power to vacuum pump 1 (SP-244U-2) and remove signal from Data Logger (XR-244U-1) channel #11 that Pump 1 (SP-244U-2) is on. Also Control Module (XY-244U-1) will close N.O. contacts of output #4 which will position isolation valves MOV-1 (MOV-244U-3) and MOV-2 (MOV-244U-4) to vacuum pump 2 (SP-244U-3), and close N.O. contacts of output #5 which will signal the Data Logger (XR-244U-1) channel #13 that a pump failure has occurred.

Additionally, Data Logger (XR-244U-1) will energize three internal relays R-1, R-2 (KSP-244-U), and R-3 which will illuminate DS-4 **"Common Fault Alarm"** light and provide alarm conditions at terminals 29, 30, 37, 38, and 39 of TB-3 for remote use. After 30 seconds, Control Module (XY-244U-1) will close N.O. contact of output #3 energizing relay K-3 and illuminating DS-3 **"Pump 2 On"** light.

When energized, relay K-3 closes two sets of N.O. contacts, starting vacuum pump 2 (SP-244U-3) and signalling Data Logger (XR-244U-1) channel #12 that Pump 2 (SP-244U-3) is on.

As vacuum pump 2 (SP-244U-3) starts running, it creates sufficient vacuum to activate pressure switch PS-2 (PS-244U-4), opening its N.C. contacts. Control Module (XY-244U-1) allows 5 seconds for this to occur after starting vacuum pump 2 (SP-244U-3).

Vacuum pump 2 (SP-244U-3) will continue to run until a failure occurs or is manually shut down.

After repairing failed pump, the pump failure alarm can be cleared by momentarily pressing PB-3 **"Alarm Reset"** button. This will send a signal to Control Module (XY-244U-1) input #4 which will open N.O. contacts of output #5 to Data Logger (XR-244U-1) channel #13. Data Logger (XR-244U-1) will de-energize internal relays R-1, R-2 (KSP-244-U), and R-3 turning off DS-4 **"Common Fault Alarm"** light and removing alarm condition at terminals 29, 30, 37, 38, and 39 of TB-3.

While a pump failure alarm exists, "Pump Swap" PB-2 feature is disabled, and enabled only after "Alarm Reset" PB-3 has been pushed.

## Beta/Gamma Detection and Monitoring

A remote Beta/Gamma detector head (RSH-244U-2) (located in cabinet on stack) is utilized to allow for detection as close to sample extraction point as possible, minimizing losses in sample transport tubing. Remote detector head communicates with its AMS-4 monitor (RIT-244U-2) located in Exhaust Stack Monitoring Cabinet. Via special cable, the AMS-4 sends a 0-5 VDC logarithmic (5 decade) signal of counts per minute to the Data Logger (XR-244U-1) channel #7.

## Eberline AMS-4 Monitor Alarms

The AMS-4 monitor (RIT-244U-2) will alarm on conditions of high-radiation or monitor failure, providing relay contacts for initiating local alarms. Local alarm provides visual and audible indication of alarm condition, provide Data Logger (XR-244U-1) with alarm status, and provide alarm contacts for remote use.

When AMS-4 monitor (RIT-244U-2) alarms on high-radiation it closes one set of N.O. internal contacts which energize relay K-4 (RM-244U-2), closing its four sets of N.O. contacts. One set of contacts turn on the red beacon and bell on top of cabinet.

Two sets of contacts provide alarm condition at terminals 25 through 28 of TB-3 for remote use.

The last set of contacts signal the Data Logger (XR-244U-1) channel #8 of a high-radiation alarm condition. Data Logger (XR-244U-1) further energizes internal relays R-1 and R-2 (KSP-244-U). R-1 illuminates DS-4 **"Common Fault Alarm"** light and R-2 (KSP-244-U) provides alarm condition at terminals 29 and 30 of TB-3 for remote use.

Similarly when AMS-4 monitor (RIT-244U-2) alarms on monitor failure it closes one set of N.O. contacts which energize relay K-5 (RM-244U-2A), closing its four sets of N.O. contacts. One set of contacts turn on the amber beacon and horn on top of cabinet.

Two sets of contacts provide alarm condition at terminals 21 through 24 of TB-3 for remote use.

The last set of contacts signal the Data Logger (XR-244U-1) channel #9 of a monitor failure alarm condition. Data Logger (XR-244U-1) further energizes internal relays R-1 and R-2 (KSP-244-U). R-1 illuminates DS-4 **"Common Fault Alarm"** light and R-2 (KSP-244-U) provides alarm condition at terminals 29 and 30 of TB-3 for remote use.

## Beta/Gamma Monitor Calibration

Calibrating or checking alarm functions of the AMS-4 (RIT-244U-2) may adversely effect the rest of the system by false alarm of high-radiation or monitor failure. To preclude this from occurring, pushbutton PB-6 and timing relay TR-1 have been provided to allow AMS-4 (RIT-244U-2) alarms to be defeated.

When performing calibration on AMS-4 (RIT-244U-2) press PB-6 which energizes TR-1 bypassing any alarm conditions that may occur during calibration. TR-1 is an interval on timing relay set for one hour, after which it will change back to its initial state. This feature has been included as a safety in case PB-6 has not been returned to its off state when calibration is complete.

## ANNULUS MONITORING

### Power Distribution

Electrical power to the cabinet is provided by a single 120 VAC line connected at terminals 1, 2, and 3 of TB-1. Instrumentation and pump are switched through SW-1. Environmental control equipment is switched through SW-2. Utility box S-1/-2 from which the air conditioner receives its power is additionally switched through SW-3.

### Sample Flow Measurement

A vacuum pump (SP-244U-1) creates a vacuum that will withdraw an air sample from the Annulus.

Once the sample is withdrawn from the Annulus it enters the Annulus Monitoring cabinet and is drawn into Eberline remote Beta/Gamma detector head (RSH-244-1).

After exiting Beta/Gamma detector head (RSH-244-1) the sample flows through LO-flo measuring station FE-1 (FE-244U-1).

Sample flow rate is determined by total and static pressure signals generated at LO-flo FE-1 (FE-244U-1) and sent to sample massflow transmitter FT-1 (FT-244U-1).

Density compensation is performed by FT-1 (FT-244U-1) using a sample temperature signal and an absolute sample pressure signal.

The sample temperature signal is generated by a 100 ohm platinum RTD TE-1 (TE-244U-1) located in FE-1 (FE-244U-1) and temperature transmitter TT-1 (TT-244U-1) located in FT-1 (FT-244U-1).

The absolute pressure signal is generated by an absolute pressure transmitter PT-1 (PT-244U-1) located in FT-1 (FT-244U-1), which senses the pressure by connection to the static pressure line in FT-1 (FT-244U-1).

By compensating for variations in sample density, the output (0-5 VDC) of FT-1 (FT-244U-1) is linear to massflow and sent to Data Logger (XR-244U-1) channel #16 (in Exhaust Stack Monitoring Cabinet) via terminals 41 and 42 of TB-4.

FT-1 (FT-244U-1) can display sample massflow (SCFM), velocity (SFPM) or temperature (°F) on its integral LED FI-1 (FI-244U-1).

Additionally, a sample temperature signal from FT-1 (FT-244U-1) is sent to Data Logger (XR-244U-1) channel #17.

### Sample Flow Modulation

The Annulus sample flow as read on FI-1 (FI-244U-1) (SCFM) can be varied by turning valve HCV-1 (HV-244U-1). HCV-1 (HV-244U-1) is a manual 3-way valve up stream of the vacuum pump that can be positioned for 100% annulus sample, 100% make-up air, or any combination thereof. As HCV-1 (HV-244U-1) is positioned for more make-up air, sample flow is reduced as indicated on FI-1 (FI-244U-1).

## Vacuum Pump System

Vacuum Pump 1 (SP-244U-1) provides the vacuum by which the annulus sample is withdrawn.

Pump start/stop initiation is controlled by pushbutton PB-1 which energizes relay K-1 and illuminates DS-2 (SP-244U-1) **"Pump ON"** light. When energized relay K-1 closes a set of N.O. contacts starting Pump 1 (SP-244U-1).

Pump motor is provided with an internal thermal overload protector that shuts motor off under conditions of high temperature. Overload is self-correcting.

## Beta/Gamma Detection and Monitoring

A remote Beta/Gamma detector head (RSH-244-1).

Remote detector head (RSH-244U-1) communicates with its AMS-4 monitor (RIT-244U-1) via special cable (RSX-244U-1) . The AMS-4 (RIT-244U-1) sends a 0-5 VDC logarithmic (5 decade) signal of counts per minute to the Data Logger (XR-244U-1) channel #18.

## Eberline AMS-4 Monitor Alarms

The AMS-4 monitor (RIT-244U-1) will alarm on condition of high-radiation or monitor failure, providing relay contacts for initiating local alarms. Local alarm provides visual and audible indication of alarm condition, provide Data Logger (XR-244U-1) with alarm status, and provide alarm contacts for remote use.

Because both the Exhaust Stack Monitoring System and the Annulus Monitoring System share one common Data Logger (XR-244U-1) (located in Exhaust Stack Monitoring Cabinet) signal wiring between the two cabinets must be properly installed for alarms to function properly.

When Beta/Gamma monitor alarms on high-radiation it closes one set of N.O. internal contacts which turns on the red beacon and bell on top of cabinet and energizes relay K-2 (RK-244U-1), closing its three sets of N.O. contacts.

Two sets of contacts provide alarm condition at terminals 21, 22, 25, and 26 of TB-3 for remote use.

The third set of contacts signal the Data Logger (XR-244U-1) channel #19 of a high-radiation alarm condition. Data Logger (XR-244U-1) further energizes internal relays R-1 and R-2. R-1 illuminates DS-4 **"Common Fault Alarm"** light and R-2 provides alarm condition at terminals 29 and 30 of TB-3 (in Exhaust Stack Monitoring Cabinet) for remote use.

Similarly when Beta/Gamma monitor alarms on monitor failure it closes one set of N.O. contacts which turn on the amber beacon and horn on top of cabinet and energizes relay K-3 (RM-244U-1A), closing its three sets of N.O. contacts.

Two sets of contacts provide alarm condition at terminals 23, 24, 27, and 28 of TB-3 for remote use.

The third set of contacts signal the Data Logger (XR-244U-1) channel #20 of a monitor failure alarm condition. Data Logger (XR-244U-1) further energizes internal relays R-1 and R-2. R-1 illuminates DS-4 **"Common Fault Alarm"** light and R-2 provides alarm condition at terminals 29 and 30 of TB-3 (in Exhaust Stack Monitoring Cabinet) for remote use.

**Beta/Gamma Monitor Calibration**

Calibrating or checking alarm functions of the AMS-4 (RIT-244U-1) may adversely effect the rest of the system by false alarm of high-radiation or monitor failure. To preclude this from occurring, pushbutton PB-4 and timing relay TR-1 have been provided to allow AMS-4 (RIT-244U-1) alarms to be defeated.

When performing calibration on AMS-4 (RIT-244U-1) press PB-4 which energizes TR-1 bypassing any alarm conditions that may occur during calibration. TR-1 is an interval on timing relay set for one hour, after which it will change back to its initial state. This feature has been included as a safety in case PB-4 has not been returned to its off state when calibration is complete.

## DATA LOGGER

In addition to displaying, recording and alarming the various parameters (listed in the above sequence) of the DCRT Continuous Air Monitoring System, the Data Logger also totalizes Exhaust Stack Volume, Record Sample Volume, and Beta/Gamma Sample Volume.

The following is a complete list of all Data Logger channel identification and function:

| Channel No. | Description | Input |
|---|---|---|
| 1 | Exhaust Stack Flow, 0 - 275 SCFM | 0 - 5 VDC |
| 2 | Exhaust Stack Temperature, 0 - 200°F | 0 - 5 VDC |
| 3 | Record Sample Flow, 0 - 2.08 SCFM | 0 - 5 VDC |
| 4 | Record Sample Temperature, 0 - 200°F | 0 - 5 VDC |
| 5 | Beta/Gamma Sample Flow, 0 - 2.06 SCFM | 0 - 5 VDC |
| 6 | Beta/Gamma Sample Temperature, 0 - 200°F | 0 - 5 VDC |
| 7 | Exhaust Stack Beta/Gamma, High-Radiation Alarm | On / Off |
| 8 | Exhaust Stack Beta/Gamma Activity, CPM | 0 - 5 VDC |
| 9 | Exhaust Stack Beta/Gamma, Monitor Failure Alarm | On / Off |
| 10 | Sample Manifolds Static Pressure, 0 -12" Hg | 0 - 5 VDC |
| 11 | Vacuum Pump 1, On/Off Status | On / Off |
| 12 | Vacuum Pump 2, On/Off Status | On / Off |
| 13 | Vacuum Pump Failure | On / Off |
| 14 | Exhaust Stack Fan, On/Off Status | On / Off |
| 15 | Exhaust Stack Beta/Gamma, Monitor in Calibration | On / Off |
| 16 | Annulus Sample Flow, 0 - 2.20 SCFM | 0 - 5 VDC |
| 17 | Annulus Sample Temperature, 0 - 200°F | 0 - 5 VDC |
| 18 | Annulus Beta/Gamma Activity, CPM | 0 - 5 VDC |
| 19 | Annulus Beta/Gamma, High-Radiation Alarm | On / Off |
| 20 | Annulus Beta/Gamma, Monitor Failure Alarm | On / Off |
| 21 | Annulus Beta/Gamma, Monitor in Calibration | On / Off |
| 22 | Beta/Gamma Sample Flow, Non-isokinetic | N/A |
| 23 | Record Sample Flow, Non-isokinetic | N/A |
| 24 | Spare | |
| T1 | Exhaust Stack Volume, SCF | 0 - 5 VDC |
| T2 | Record Sample Volume, SCF | 0 - 5 VDC |
| T3 | Beta/Gamma Sample Flow Volume, SCF | 0 - 5 VDC |

9413297.0409



| REV | DESCRIPTION | DATE | APVD |
|---|---|---|---|
| 1 | SEE DCR #1125 | 4/26/94 | [illegible] |
| 2 | SEE DCR #1135 | 6/6/94 | [illegible] |

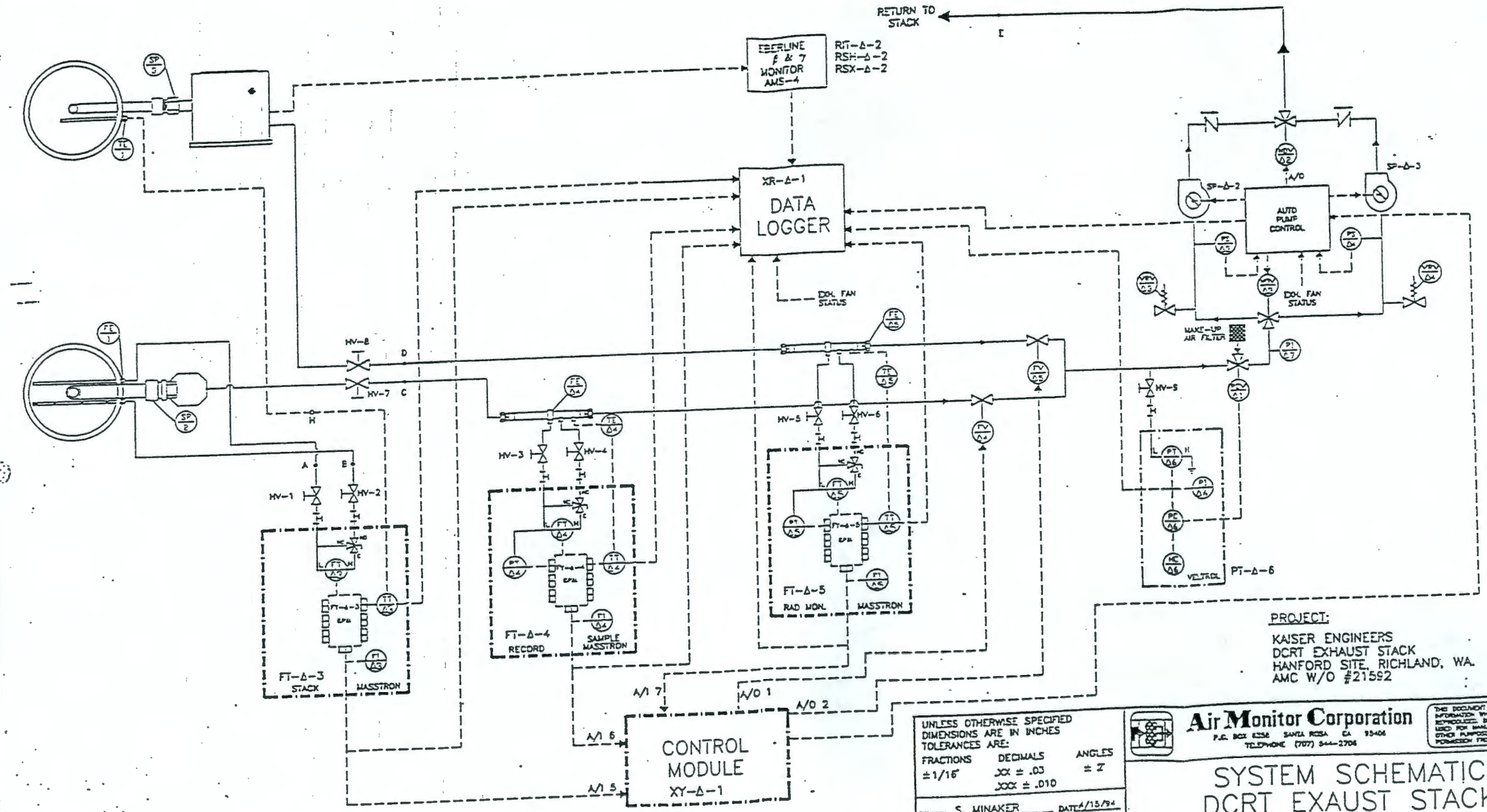


PROJECT:

KAISER ENGINEERS
DCRT EXHAUST STACK
HANFORD SITE, RICHLAND, WA.
AMC W/O #21592

CONNECTION CODE:

A. STATIC PRESSURE STACK
B. TOTAL PRESSURE STACK
C. STACK RECORD SAMPLE
D. STACK RAD. MON. SAMPLE
E. STACK EXHAUST RETURN LINE
F. RTD SIGNAL WIRING

CONNECTION SIZE:

1/4" COMPRESSION
1/4" COMPRESSION
1/2" COMPRESSION
1/2" COMPRESSION
3/4" COMPRESSION
1/2" CONDUIT K.O. (BY OTHERS)

UNLESS OTHERWISE SPECIFIED DIMENSIONS ARE IN INCHES
TOLERANCES ARE:
FRACTIONS ±1/16" DECIMALS .XX ± .03 .XXX ± .010 ANGLES ± 2°

DRAWN: S. MINAKER DATE: 4/15/94
DESIGN BY: S. Mincher DATE: 4/26/94
DESIGN VERIF: P. Bauer DATE: 4/26/94
QA REVIEW: B. Silsle DATE: 4/26/94
APPROVAL: B. DeBauer DATE: 4/26/94

**Air Monitor Corporation**
P.O. BOX 6356 SANTA ROSA CA 95406
TELEPHONE (707) 544-2706

THIS DOCUMENT CONTAINS PROPRIETARY INFORMATION WHICH SHALL NOT BE REPRODUCED, DISCLOSED TO OTHERS, USED FOR MANUFACTURING OR ANY OTHER PURPOSE WITHOUT WRITTEN PERMISSION FROM AIR MONITOR CORP.

# SYSTEM SCHEMATIC DCRT EXAUST STACK

FORMAT B | DWG NO. W21592AA | REV 2

S.F. N.T.S. | DO NOT SCALE DRAWING | SHEET 1 OF 1

| REV | DESCRIPTION | DATE | APVD |
|---|---|---|---|
| 1 | SEE DCR #1125 | 4/26/94 | [illegible] |
| 2 | SEE DCR #1133 | 6/6/94 | [illegible] |

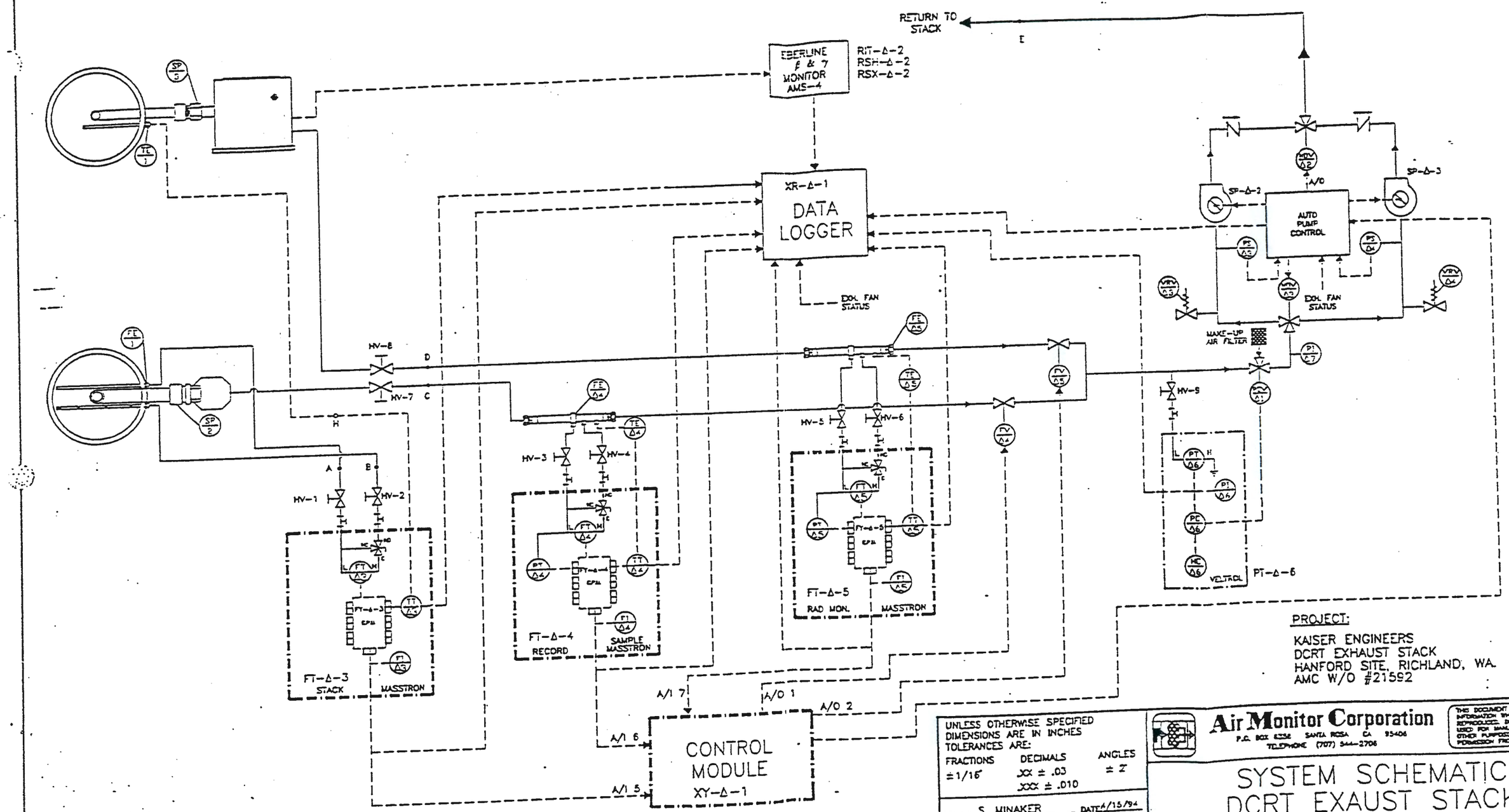


PROJECT:
KAISER ENGINEERS
DCRT EXHAUST STACK
HANFORD SITE, RICHLAND, WA.
AMC W/O #21592

UNLESS OTHERWISE SPECIFIED DIMENSIONS ARE IN INCHES
TOLERANCES ARE:
FRACTIONS ±1/16" DECIMALS .XX ± .03 .XXX ± .010 ANGLES ± 2°

DRAWN: S. MINAKER DATE: 4/15/94
DESIGN BY: S. Minaker DATE: 4/26/94
DESIGN VERIF: P. Dave DATE: 4/28/94
QA REVIEW: D. Sibble DATE: 4/28/94
APPROVAL: D. DeBaun DATE: 4/28/94

**Air Monitor Corporation**
P.O. BOX 6358 SANTA ROSA CA 95406
TELEPHONE (707) 544-2706

THIS DOCUMENT CONTAINS PROPRIETARY INFORMATION WHICH SHALL NOT BE REPRODUCED, DISCLOSED TO OTHERS, USED FOR MANUFACTURING OR ANY OTHER PURPOSE WITHOUT WRITTEN PERMISSION FROM AIR MONITOR CORP.

# SYSTEM SCHEMATIC DCRT EXAUST STACK

FORMAT B | DWG NO. W21592AA | REV 2
S.F. N.T.S. | DO NOT SCALE DRAWING | SHEET 1 OF 1

CONNECTION CODE:
A. STATIC PRESSURE STACK
B. TOTAL PRESSURE STACK
C. STACK RECORD SAMPLE
D. STACK RAD. MON. SAMPLE
E. STACK EXHAUST RETURN LINE
F. RTD SIGNAL WIRING

CONNECTION SIZE:
1/4" COMPRESSION
1/4" COMPRESSION
1/2" COMPRESSION
1/2" COMPRESSION
3/4" COMPRESSION
1/2" CONDUIT K.O. (BY OTHERS)

| REV | DESCRIPTION | DATE | APVD |
|---|---|---|---|
| 1 | REMOVE ANCHOR BOLT NOTES<br>ADDED RAIN GUARD. | 5/20 | JS |

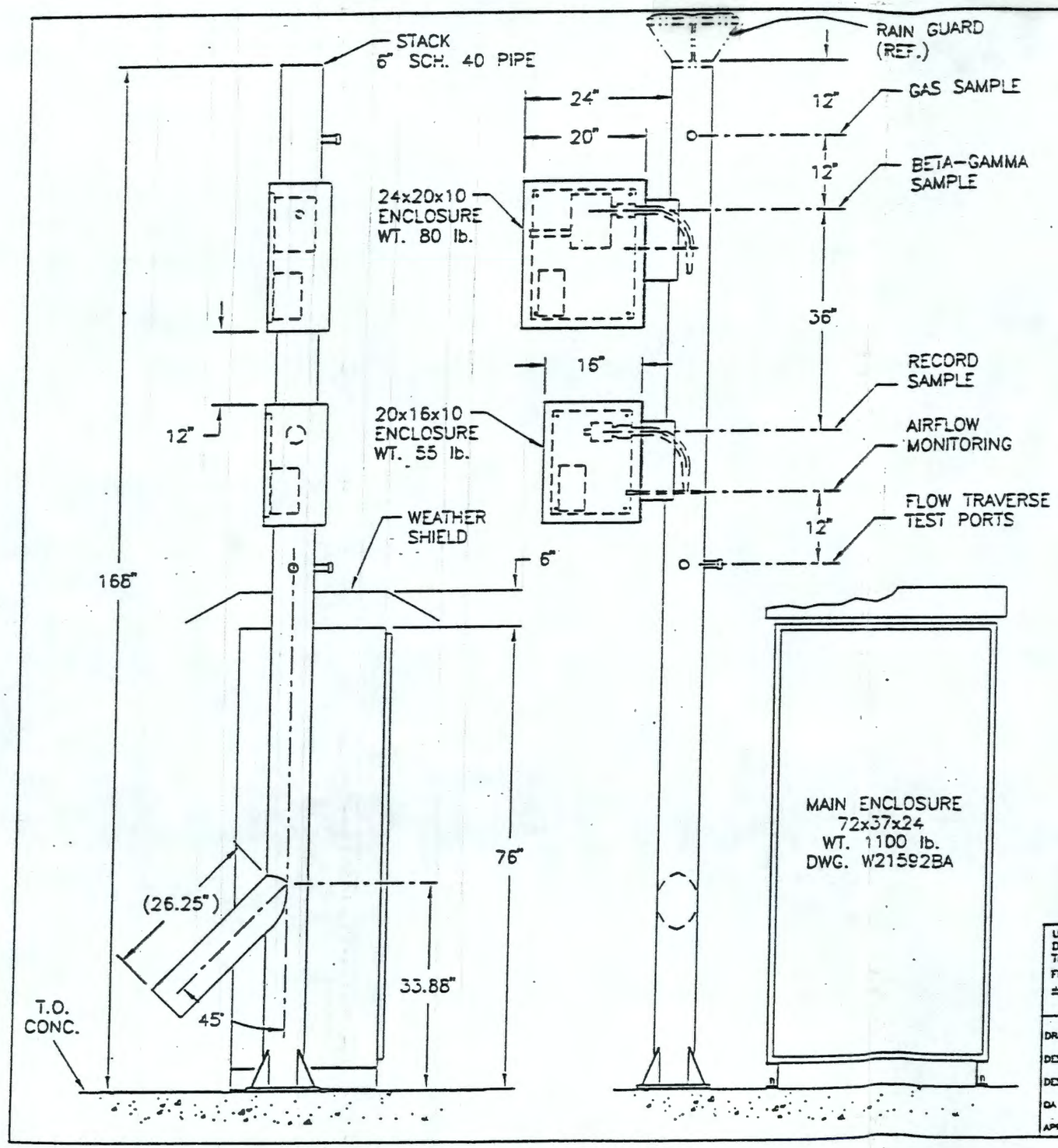


WEIGHTS: THE WEIGHT OF THE STACK, TO ENCLUDE BOTH ENCLOSURES, IS APPROXIMATELY 535 lbs.
THE INDIVIDUAL STACK ENCLOSURE WEIGHTS ARE SHOWN ON THE VIEWS.
THE WEIGHT OF THE MAIN ENCLOSURE IS APPROXIMATELY 1100 lbs.
THE WEIGHT OF THE ANNULUS ENCLOSURE, SHOWN ON DWG. W21592BB, IS APPROXIMATELY 730 lbs.

PROJECT
KAISER ENGINEERS
DCRT EXHAUST STACK
HANFORD SITE, RICHLAND, WA
AMC W.O. 21592

UNLESS OTHERWISE SPECIFIED DIMENSIONS ARE IN INCHES
TOLERANCES ARE:

| FRACTIONS | DECIMALS | ANGLES |
|---|---|---|
| ±1/16" | .XX ± .03<br>.XXX ± .010 | ± 2° |

DRAWN: JS DATE: 4/24/94
DESIGN BY: DATE:
DESIGN VERIF: DATE:
QA REVIEW: DATE:
APPROVAL: DATE:

**Air Monitor Corporation**
P.O. BOX 5336 SANTA ROSA CA 95402
TELEPHONE (707) 544-2706

THE DOCUMENT CONTAINS PROPRIETARY INFORMATION WHICH SHALL NOT BE REPRODUCED, DISCLOSED TO OTHERS, USED FOR MANUFACTURING OR ANY OTHER PURPOSE WITHOUT WRITTEN PERMISSION FROM AIR MONITOR CORP.

GENERAL ARRANGEMENT
LAYOUT & ANCHOR BOLT STUDY

FORMAT B | DWG NO. W21592DB | REV 1
S.F. 20 | DO NOT SCALE DRAWING | SHEET

| REV | DESCRIPTION | DATE | APVD |
|---|---|---|---|

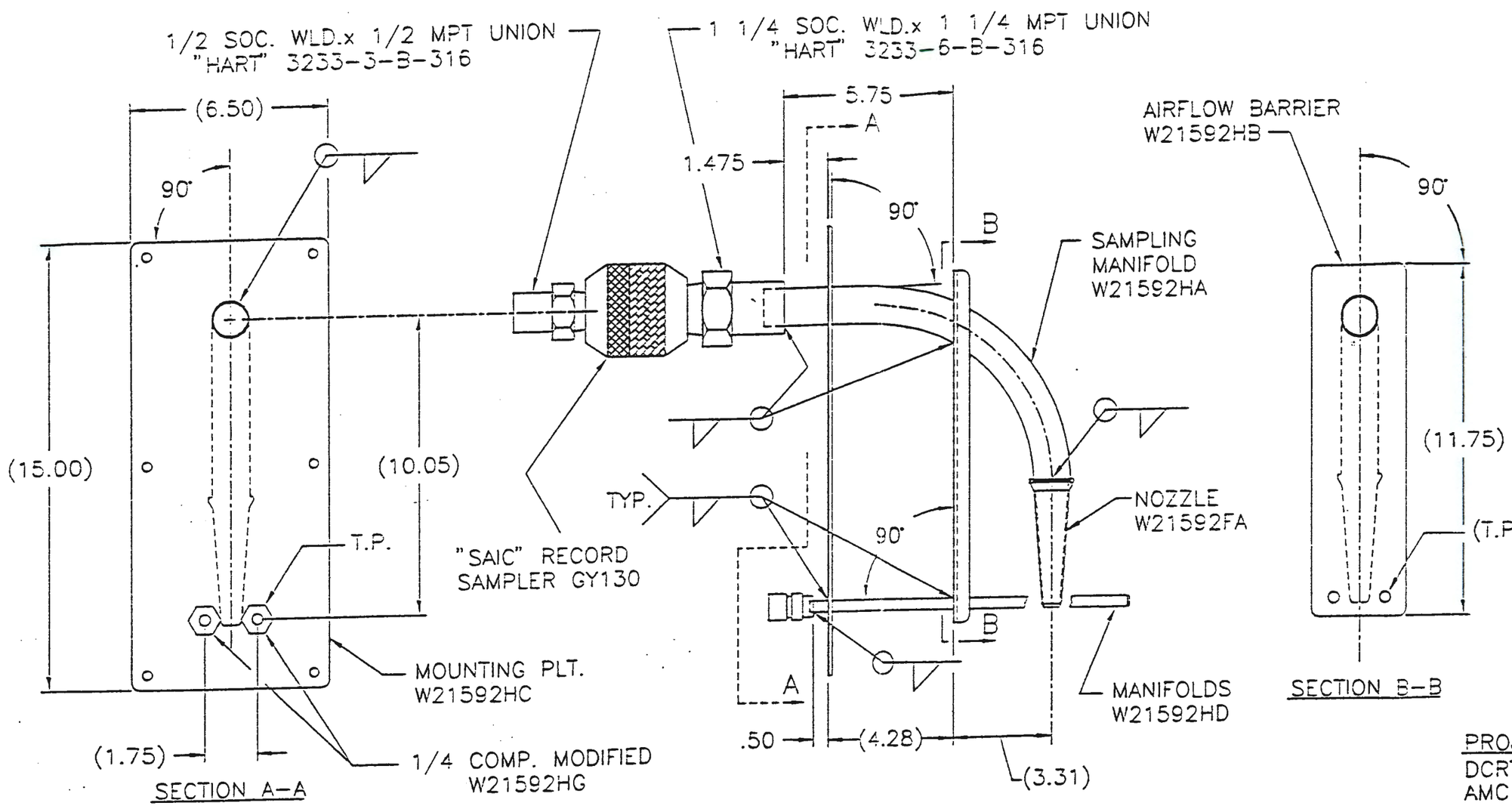


PROJECT
DCRT EXHAUST STACK
AMC W.O. 21592

NOTES:
1. MATERIALS ALL 316 SST.
2. QTY. 1
3. TOLERANCES PER QA PROCEDURE # 26.

UNLESS OTHERWISE SPECIFIED DIMENSIONS ARE IN INCHES
TOLERANCES ARE:

| FRACTIONS | DECIMALS | ANGLES |
|---|---|---|
| ± | .XX ± | ± |
| | .XXX ± | |

| | | | |
|---|---|---|---|
| DRAWN: | JS | DATE: | 4/28/94 |
| DESIGN | | DATE: | 4/29/94 |
| DESIGN VERIF: | P. Dave | DATE: | 4-29-94 |
| QA REVIEW: | | DATE: | 4-29-94 |
| APPROVAL: | D. DeSoto | DATE: | 5-2-94 |

**Air Monitor Corporation**
P.O. BOX 6336 SANTA ROSA CA 95406
TELEPHONE (707) 544-2706

THIS DOCUMENT CONTAINS PROPRIETARY INFORMATION WHICH SHALL NOT BE REPRODUCED, DISCLOSED TO OTHERS, USED FOR MANUFACTURING OF ANY OTHER PURPOSE WITHOUT WRITTEN PERMISSION FROM AIR MONITOR CORP.

FLOW & RECORD SAMPLE PROBE

| FORMAT | DWG NO. | REV |
|---|---|---|
| B | W21592HF | 0 |

S.F. 1=4 | DO NOT SCALE DRAWING | SHEET

| REV | DESCRIPTION | DATE | APVD |
|---|---|---|---|
| 1 | DCR # 1134 | 5/31/94 | |

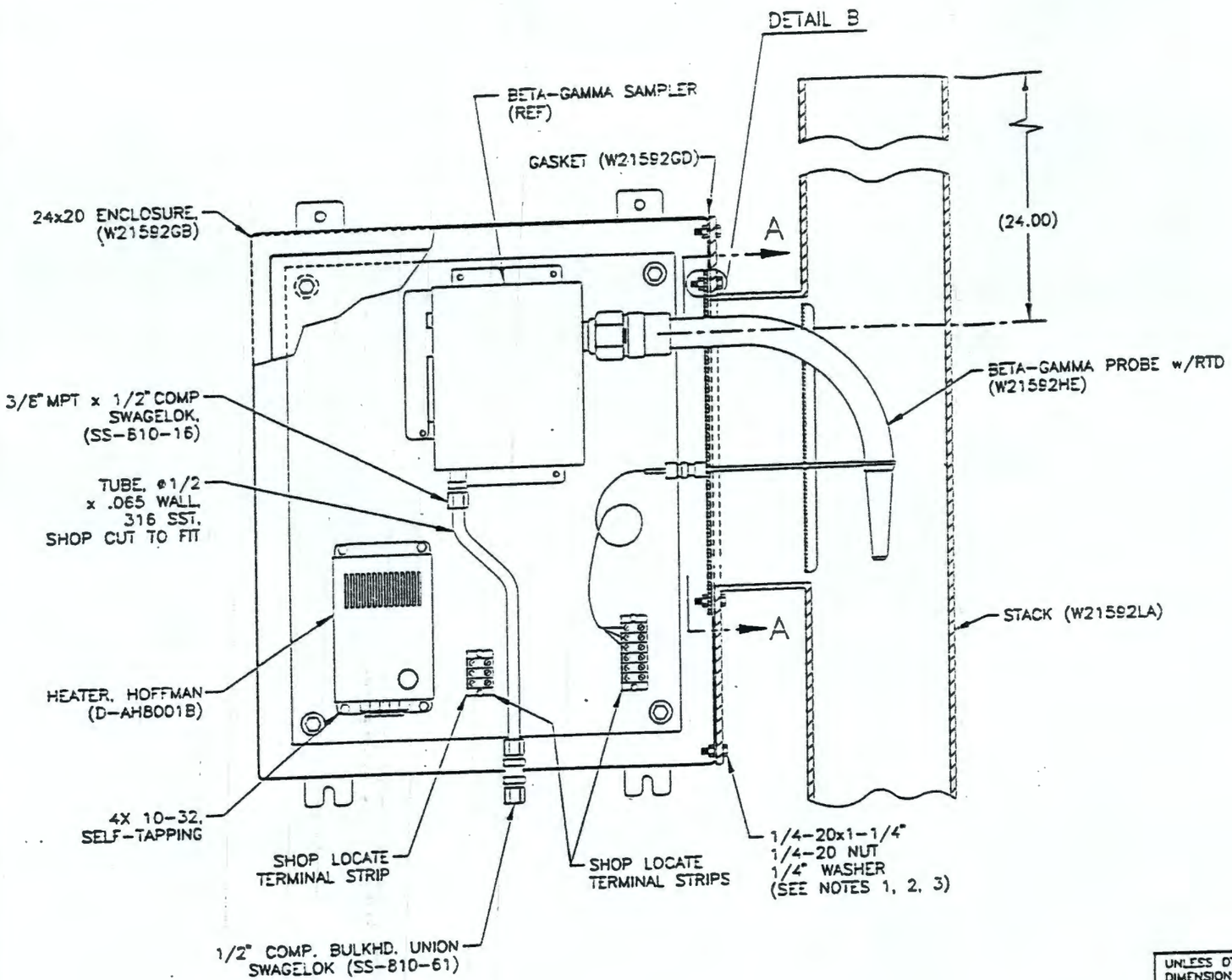


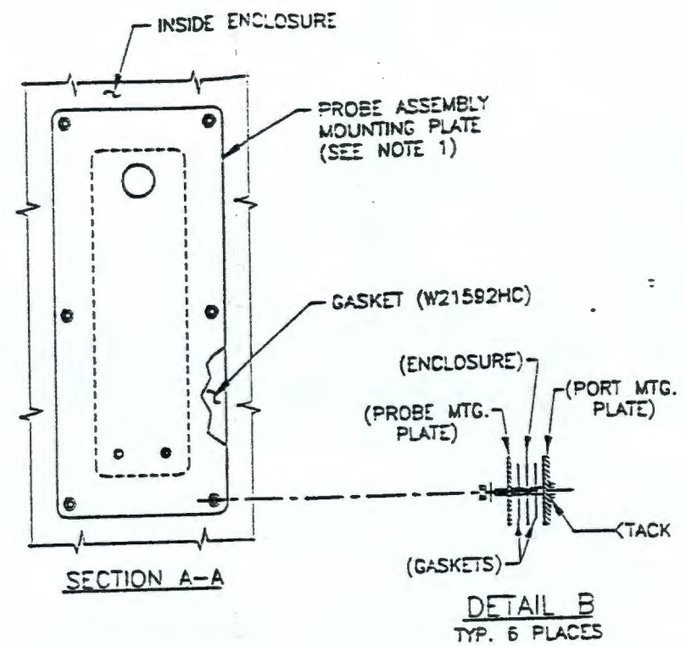


SEQUENCE OF ASSEMBLY:

1. TACK WELD (6) 1/4-20 BOLTS TO BACK OF PORT MOUNTING PLATE (SEE DETAIL B).
2. MOUNT ENCLOSURE TO PORT, USING GASKET (W21592GD), AND (10) 1/4-20 NUTS AND WASHERS.
3. MOUNT PROBE ASSEMBLY (W21592HE) INSIDE ENCLOSURE, USING GASKET (W21592HC), AND (6) NUTS & WASHERS.

PROJECT
DCRT EXHAUST STACK
AMC W.O. #21592

UNLESS OTHERWISE SPECIFIED DIMENSIONS ARE IN INCHES
TOLERANCES ARE:

| FRACTIONS | DECIMALS | ANGLES |
|---|---|---|
| ±1/16" | .XX ± .03" | ± 2° |
| | .XXX ± .010" | |

DRAWN: S. LUNDERGAN DATE: 4/29/94
DESIGN BY: J. Steele DATE: 5/2/94
DESIGN VERIF: P. Dave DATE: 5-4-94
QA REVIEW: D. Silsle DATE: 5-4-94
APPROVAL: D. DeBaun DATE: 5-5-94

**Air Monitor Corporation**
P.O. BOX 6358 SANTA ROSA CA 95406
TELEPHONE (707) 544-2706

THIS DOCUMENT CONTAINS PROPRIETARY INFORMATION WHICH SHALL NOT BE REPRODUCED, DISCLOSED TO OTHERS, USED FOR MANUFACTURING OR ANY OTHER PURPOSE WITHOUT WRITTEN PERMISSION FROM AIR MONITOR CORP.

# ENCLOSURE ASSEMBLY BETA/GAMMA SAMPLE

| FORMAT | DWG NO. | REV |
|---|---|---|
| B | W21592GH | 1 |

S.F. 6 | DO NOT SCALE DRAWING | SHEET 1 OF 1

| REV | DESCRIPTION | DATE | APVD |
|---|---|---|---|

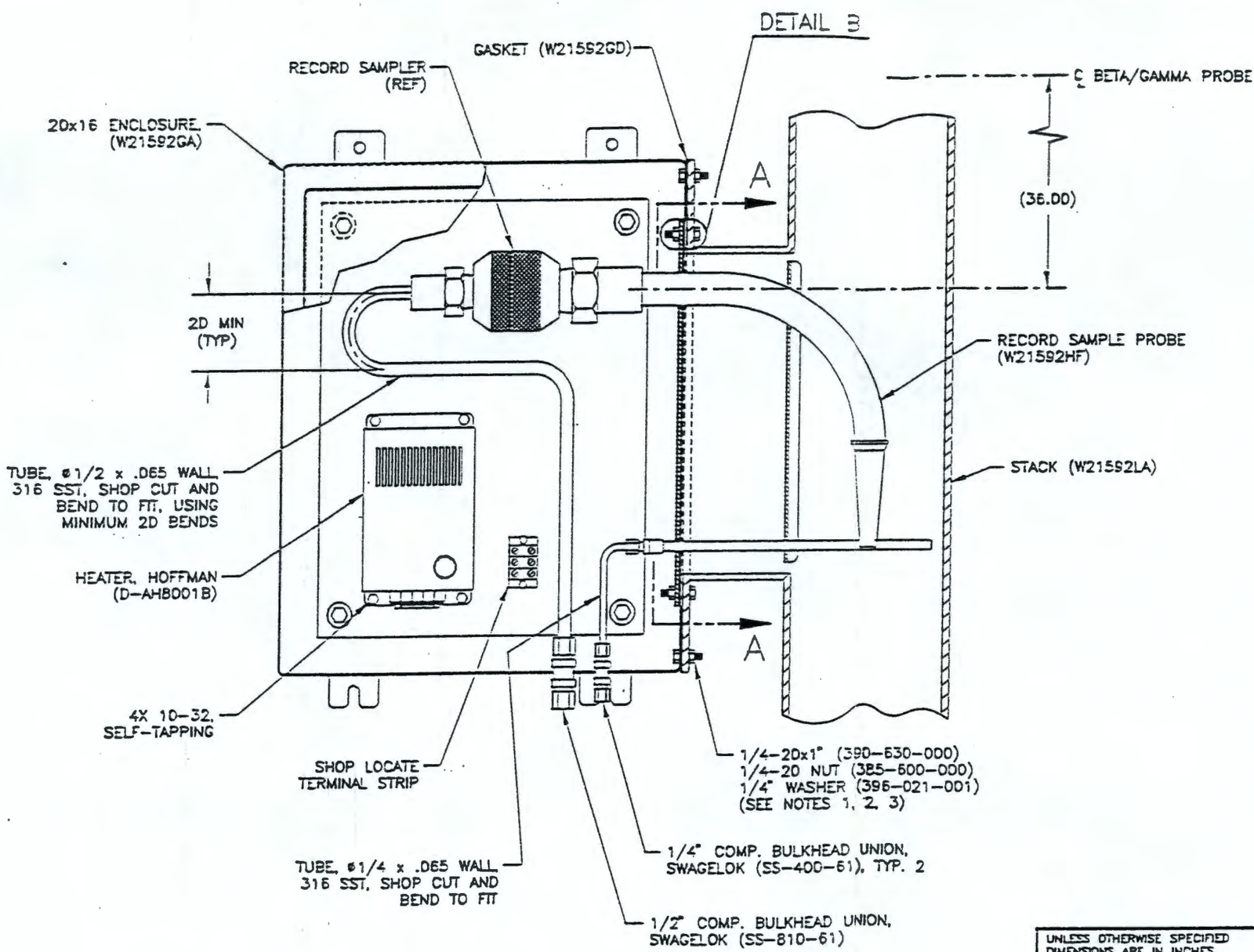


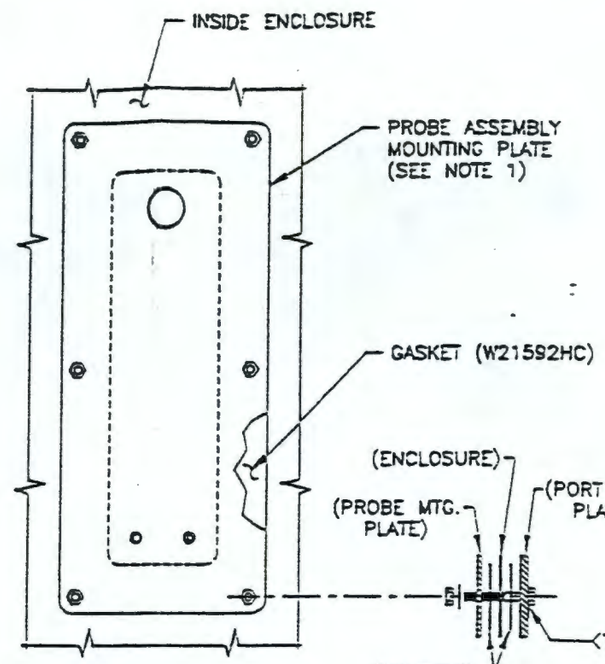


SECTION A–A

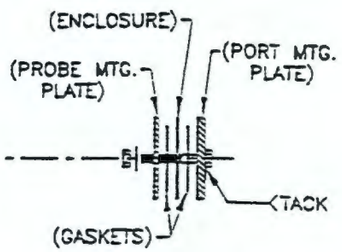


DETAIL B
TYP. 6 PLACES

SEQUENCE OF ASSEMBLY:

1. TACK WELD (6) 1/4-20 BOLTS TO BACK OF PORT MOUNTING PLATE (SEE DETAIL B).
2. MOUNT ENCLOSURE TO PORT, USING GASKET (W21592GD), AND (8) 1/4-20 NUTS AND WASHERS.
3. MOUNT PROBE ASSEMBLY (W21592HF) INSIDE ENCLOSURE, USING GASKET (W21592HC), AND (6) NUTS & WASHERS.

PROJECT
DCRT EXHAUST STACK
AMC W.O. #21592

UNLESS OTHERWISE SPECIFIED DIMENSIONS ARE IN INCHES
TOLERANCES ARE:

| FRACTIONS | DECIMALS | ANGLES |
|---|---|---|
| ±1/16" | .XX ± .03 | ± 2° |
| | .XXX ± .010 | |

DRAWN: S. LUNDERGAN DATE: 4/29/94
DESIGN BY: DATE: 5/3/94
DESIGN VERIF: P. Dave DATE: 5-3-94
QA REVIEW: DATE: 5-3-94
APPROVAL: D. DeBaun DATE: 5-6-94

**Air Monitor Corporation**
P.O. BOX 8356 SANTA ROSA CA 95406
TELEPHONE (707) 544-2706

THIS DOCUMENT CONTAINS PROPRIETARY INFORMATION WHICH SHALL NOT BE REPRODUCED, DISCLOSED TO OTHERS, USED FOR MANUFACTURING OF ANY OTHER PURPOSE, WITHOUT WRITTEN PERMISSION FROM AIR MONITOR CORP.

# ENCLOSURE ASSEMBLY RECORD SAMPLE

| FORMAT | DWG NO. | REV |
|---|---|---|
| B | W21592GG | 0 |

S.F. 5 | DO NOT SCALE DRAWING | SHEET 1 OF 1

| REV | DESCRIPTION | DATE | APVD |
|---|---|---|---|

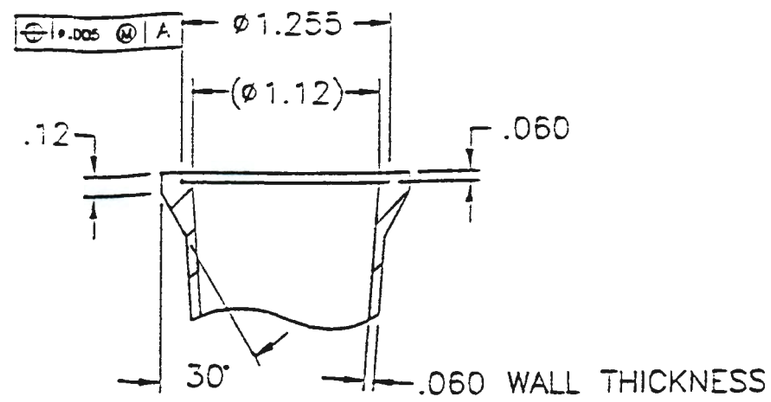


DETAIL B

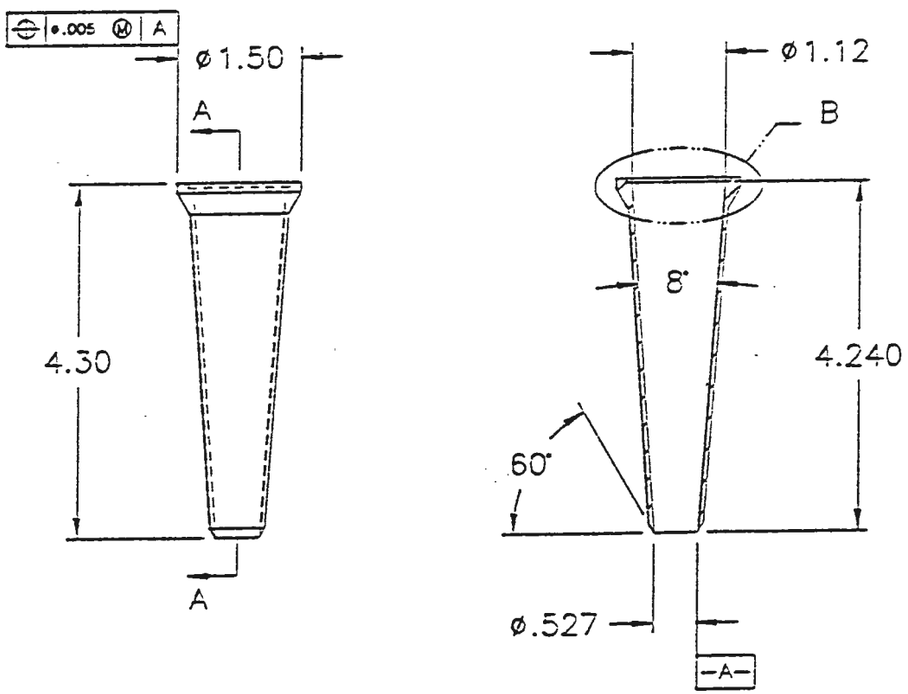


SECTION A–A

NOTES:
MATERIAL: 316 SST, ASTM A276
SURFACE FINISH: INSIDE & OUTSIDE 63 √
REMOVE ALL BURRS AND SHARP EDGES.

QTY: 2

PROJECT:
DCRT EXHAUST STACK
HANFORD SITE
AMC W.O. 21592

UNLESS OTHERWISE SPECIFIED DIMENSIONS ARE IN INCHES
TOLERANCES ARE:

| FRACTIONS | DECIMALS | ANGLES |
|---|---|---|
| ±1/16" | .XX ± .03 | ± 2° |
| | .XXX ± .010 | |

DRAWN: JES DATE: 4/28/94
DESIGN BY: [illegible] DATE: 4/28/94
DESIGN VERIF: S. Kincher DATE: 4/28/94
QA REVIEW: [illegible] DATE: 4-26-94
APPROVAL: [illegible] DATE: 4-26-94

**Air Monitor Corporation**
P.O. Box 6366 Santa Rosa CA 95406
TELEPHONE (707) 544-2706

THIS DOCUMENT CONTAINS PROPRIETARY INFORMATION WHICH SHALL NOT BE REPRODUCED, DISCLOSED TO OTHERS, USED FOR MANUFACTURING OR ANY OTHER PURPOSE WITHOUT WRITTEN PERMISSION FROM AIR MONITOR CORP.

NOZZLE
SAMPLING

| FORMAT | DWG NO. | REV |
|---|---|---|
| B | W21592FA | 0 |

S.F. 1=2 | DO NOT SCALE DRAWING | SHEET

9413297.0415

# CORRESPONDENCE DISTRIBUTION COVERSHEET

| Author | Addressee | Correspondence No. |
|---|---|---|
| J. E. Rasmussen, RL<br>(C. E. Sowa, WHC) | A. W. Conklin, DOH<br>J. McCormick, EPA | Incoming:9403880<br>Xref:9403872<br>Xref:9456060D |

Subject: NOTICE OF CONSTRUCTION FOR THE 244-U DOUBLE CONTAINED RECEIVER TANK

## INTERNAL DISTRIBUTION

| Approval | Date | Name | Location | w/att |
|---|---|---|---|---|
| | | Correspondence Control | A3-01 | |
| | | D. Alison | R1-52 | |
| | | J. A. Bates | H6-22 | |
| | | G. M. Crummel | R1-51 | |
| | | L. P. Diediker | T1-30 | |
| | | W. T. Dixon, Assignee | H6-21 | |
| | | D. B. Engelman | R1-49 | |
| | | L. A. Garner | R2-86 | |
| | | M. R. Koch | R1-49 | |
| | | J. J. Luke | H6-25 | |
| | | P. J. Martell | T1-30 | |
| | | H. E. McGuire, Sr. Staff | B3-63 | |
| | | C. E. Sowa | H6-25 | |
| | | T. J. Snider | R1-52 | |
| | | A. R. Tedeschi | S2-45 | |
| | | EPIC | H6-08 | |
| | | CES/File/LB | H6-25 | |