Department of Energy
Richland Operations Office
P.O. Box 550
Richland, Washington 99352

8902429
0001205

JUN 9 1989

RECEIVED
JUN 14 1989

Mr. Roger F. Stanley, Project Manager
State of Washington
Department of Ecology
Mail Stop PV-11
Olympia, Washington 98504-8711

Dear Mr. Stanley:

SOIL CHARACTERIZATION AND THE REMOVAL OF EQUIPMENT FROM THE 1324-N SURFACE IMPOUNDMENT (TSD #T-1-2)

As per your request, more details are being provided for the subject TSD Unit equipment removal activities.

The following equipment removal is planned to facilitate sampling and to allow safe access to the bottom of the 1324-N Surface Impoundment.

A. Six-inch diameter Schedule 80 PVC liquid sparger piping (Fig. D-2).

B. Two-inch diameter Schedule 80 PVC air sparger piping (Fig. D-3).

C. Concrete anchor blocks with two-inch diameter Schedule 80 sand filled and capped (both ends) PVC piping (Fig. D-3).

D. Four-inch diameter PVC perforated drain piping, part of the leak detection system (Fig. D-8), between the Hypalon liners will be cut as necessary.

The Hypalon liner and associated piping described above will be rinsed three times and the neutralized rinsate, pH 2 to 12.5, will be discharged into the 1324-NA Percolation Pond.

The sand from capped pipes will be collected into 55-gallon steel drums and labeled. If the sand and concrete are non-hazardous, as per WAC 173-303, they will be shipped to the Central Landfill. If found to be hazardous, they will be transported to an appropriate EPA approved TSD facility within 90 days.

JUN 1989
RECEIVED
EDMC

JUN 9 1989

If you should have any questions, please contact Mr. D. L. Duncan of the U.S. Department of Energy-Richland Operations Office on (509) 376-9333 or Ms. C. J. Geier of Westinghouse Hanford Company on (509) 376-2237.

Sincerely,

EA Brown
for R. D. Izatt, Director
Environmental Restoration Division
Richland Operations Office

RE Lerch
R. E. Lerch, Manager
Environmental Division
Westinghouse Hanford Company

Enclosures:
Figure C-2
Figure D-2
Figure D-3
Figure D-8

cc: P. T. Day, EPA
R. E. Lerch, WHC

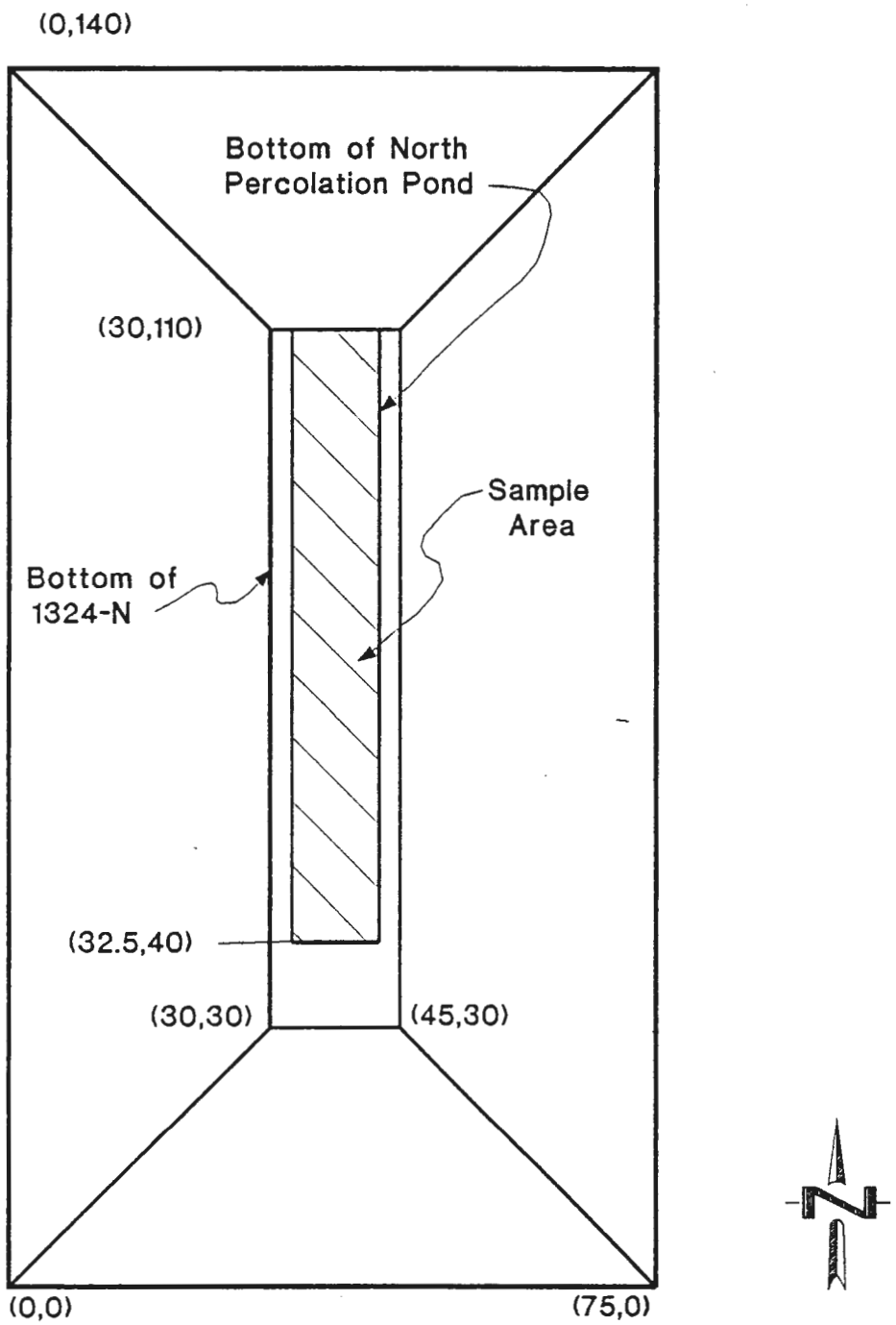

Not to Scale, Coordinates are Approximate

Fig C-2

1324-N Surface Impoundment - Sample Area.

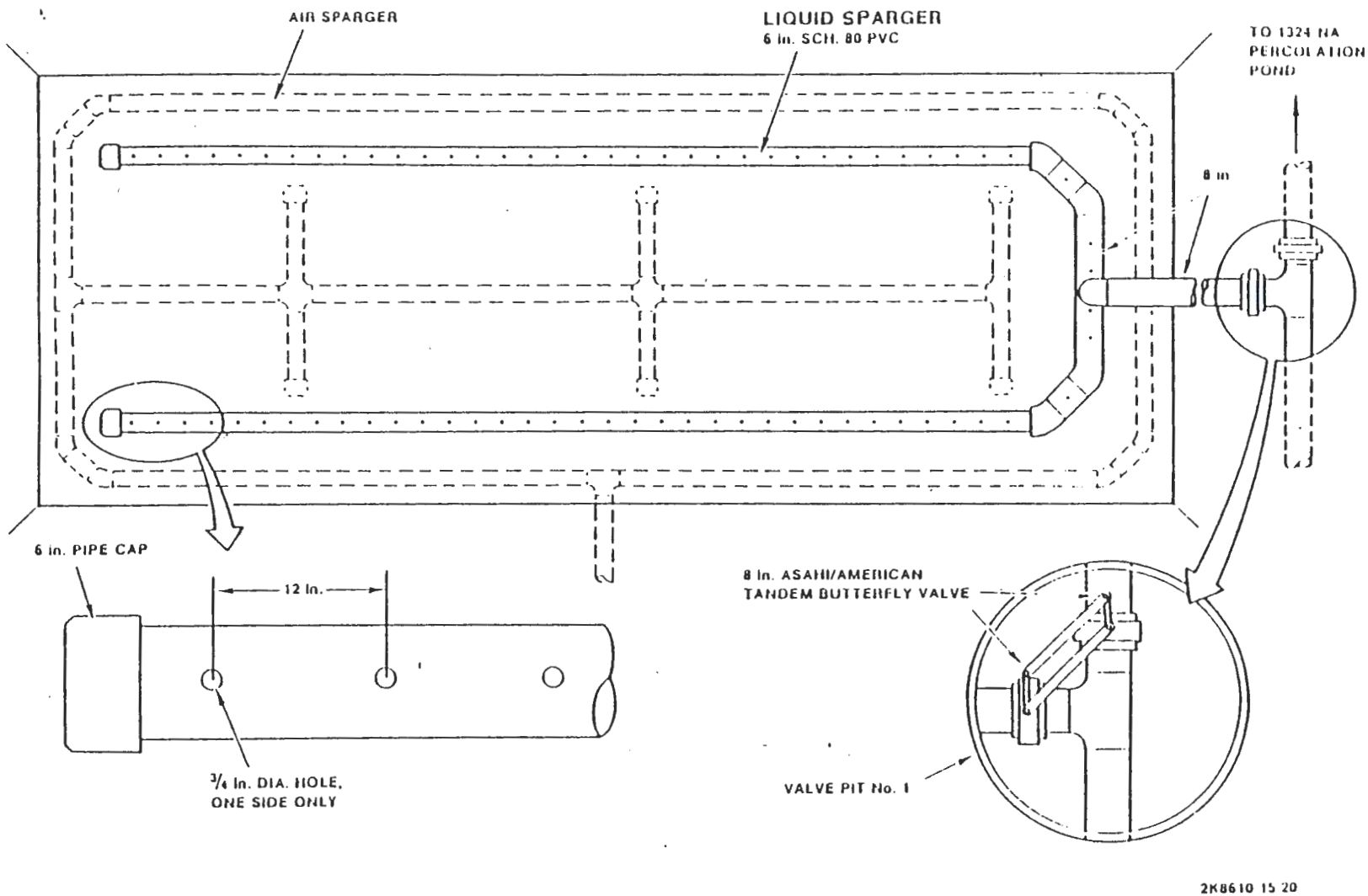

FIGURE D-2
INFLUENT LINES AND LIQUID SPARGER SYSTEM

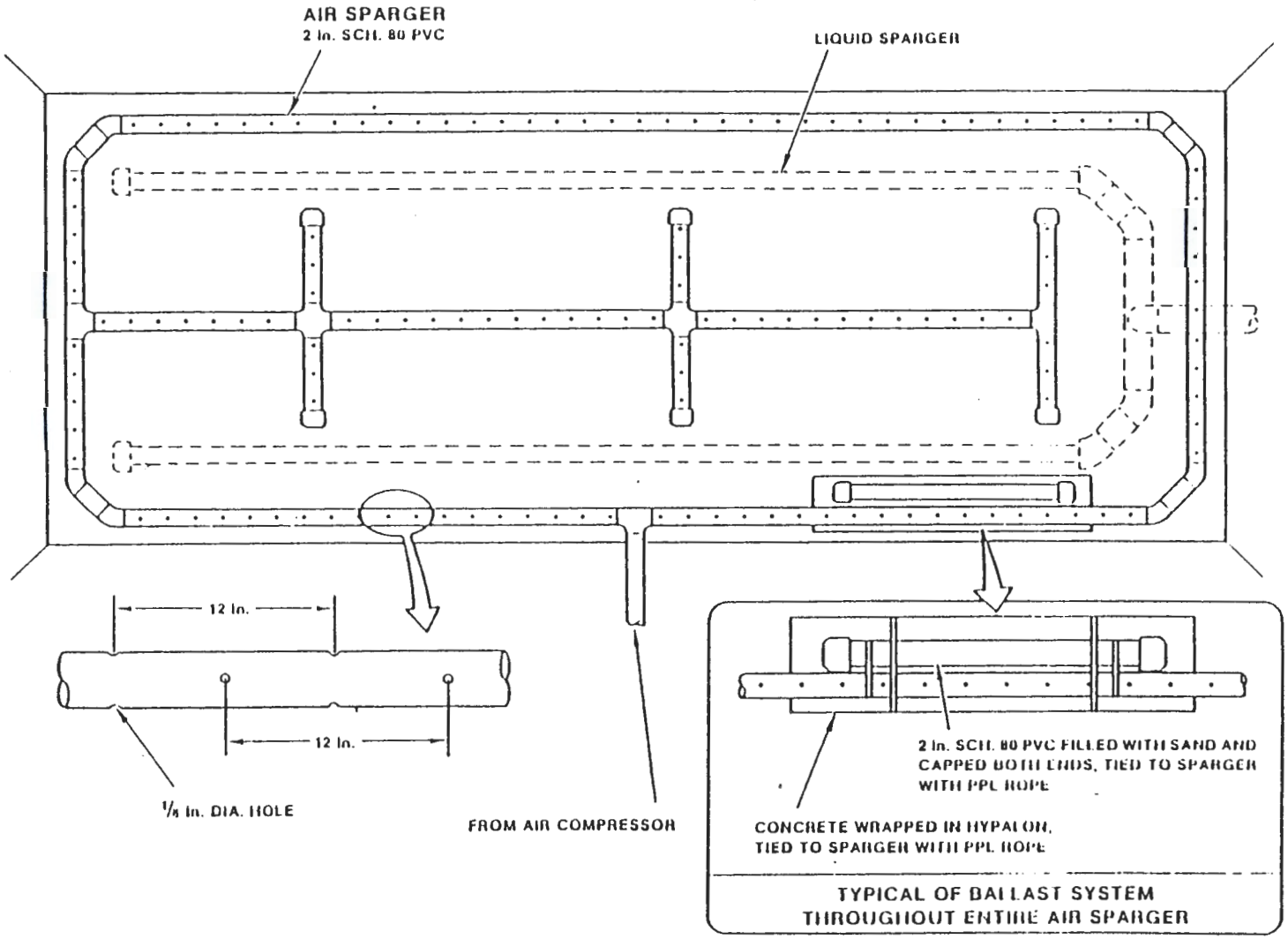

FIGURE D-3
AIR SPARGER SYSTEM

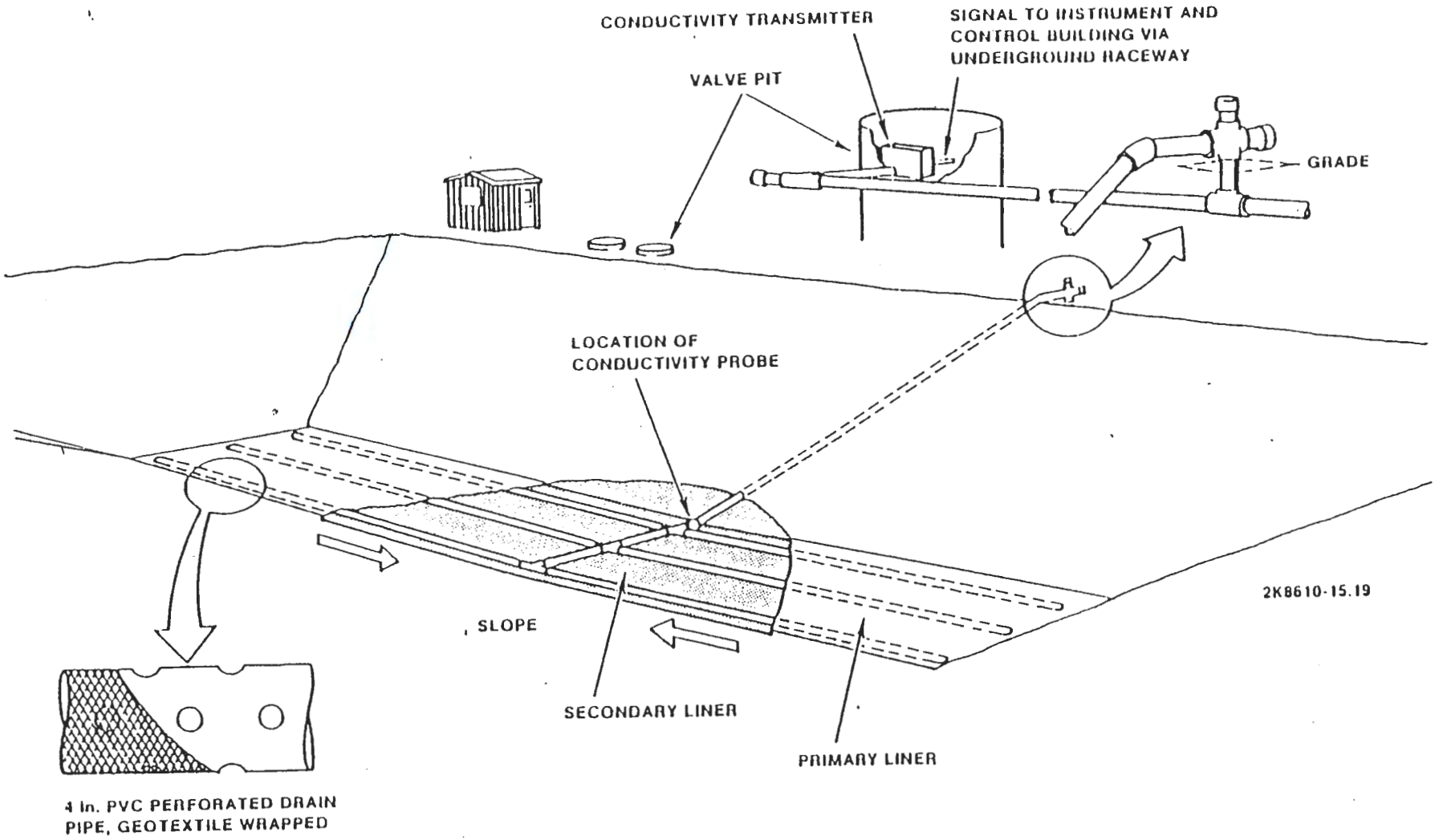

FIGURE D-8
LEAK DETECTION SYSTEM

DISTRIBUTION COVERSHEET

INCOMING LETTER 8902429

Author R. D. Izatt
R. E. Lerch

Addressee Mr. Roger F. Stanley, Project Manager
State of Washington
Department of Ecology
Mail Stop PV-11
Olympia, Washington 98504-8711

Correspondence No. Incoming: 8902429

Internal Distribution

Approval	Date	Name	Location	w/att
		M. R. Adams	H4-55	x
		L. C. Brown	H4-51	x
		C. J. Geier	H4-57	x
		K. L. Hoewing	B3-06	x
		R. H. Koga	B3-07	x
		A. D. Krug	H4-55	x
		R. E. Lerch (Assignee)	H4-51	x
		H. E. McGuire	H4-51	x
		N. M. Naiknimbalkar	H4-55	x
		R. C. Nichols	B3-01	x
		J. E. Nolan	B3-01	x
		L. L. Powers	H4-57	x
		J. W. Schmidt	T6-28	x
		J. L. Waite	H4-52	x
		D. J. Watson	X0-41	x
		E. A. Weakley	L6-28	x
		S. A. Wiegman	H4-50	x
		J. G. Woolard	H4-57	x
		T. L. Elzie (2)	H4-55	x
		EDMC	H4-51	x
		Correspondence Control	A3-01	X

RECEIVED
JUN 14 1989
CORRESPONDENCE CONTROL