U.S. Department of Energy
Office of River Protection
P.O. Box 450, MSIN H6-60
Richland, Washington 99352

0097486

JUL 07 2011

11-ESQ-164

Ms. Jane A. Hedges, Program Manager
Nuclear Waste Program
Washington State
Department of Ecology
3100 Port of Benton Blvd.
Richland, Washington 99354

Dear Ms. Hedges:

SUBMITTAL OF HANFORD FACILITY RESOURCE CONSERVATION AND RECOVERY ACT (RCRA) PERMIT MODIFICATION NOTIFICATION FORM 24590-HLW-PCN-ENV-11-001

Reference: WA7890008967, "Dangerous Waste Portion of the Hanford Facility Resource Conservation and Recovery Act Permit for the Treatment, Storage, and Disposal of Dangerous Waste, Operating Unit 10, 'Waste Treatment and Immobilization Plant.'"

This letter transmits Hanford Facility RCRA Permit Modification Notification Form 24590-HLW-PCN-ENV-11-001, attached, for the Washington State Department of Ecology (Ecology) review and approval. The form describes a requested Class 1 modification requiring concurrence or approval to the Reference.

Modification Notification Form 24590-HLW-PCN-ENV-11-001 submits equipment assembly drawings for Acidic Waste Vessel RLD-VSL-00007 and Plant Wash and Drains Vessel RLD-VSL-00008 and a Mechanical Data Sheet for RLD-VSL-0007 to replace the permitted drawings and data sheet currently found in Appendix 10.6 of the Reference.

Ecology was provided an opportunity to review the modification notification form and the associated information and comments were dispositioned.

If you have any questions, please contact me, or your staff may contact Gae M. Neath, Environmental Compliance Division, (509) 376-7828.

Sincerely,

Brian A. Harker for
Paul G. Harrington, Acting Assistant Manager
Office of Environmental Safety and Quality

ESQ:GMN

Attachment

cc: See page 2

H.O.8

JUL 0 7 2011

cc w/attach:
B. L. Curn, BNI
B. Dubiel, BNI
B. G. Erlandson, BNI
P. A. Fisher, BNI
S. K. Murdock, BNI
F. M. Russo, BNI
Administrative Record (WTP H-0-8)
BNI Correspondence
Environmental Portal, LMSI

cc electronic:
A. S. Carlson, Ecology
S. L. Dahl, Ecology (1 hard copy)
M. K. Faber, Ecology
M. E. Jones, Ecology
D. W. Mears, Ecology
J. J. Wallace, Ecology (2 hard copies)
J. F. Ollero, MSA
A. C. McKarns, RL
D. J. Sommer, SCS

cc w/o attach:
D. M. Busche, BNI
J. Cox, CTUIR
S. G. Harris, CTUIR
D. McDonald, Ecology
G. P. Bohnee, NPT
K. Niles, Oregon Energy
S. R. Weil, RL
R. Jim, YN

RECEIVED
JUL 1 3 2011
EDMC

Attachment
11-ESQ-164
(24 Pages)

Hanford Facility RCRA Permit Modification Notification
Form 24590-HLW-PCN-ENV-11-001

Quarter Ending 09/31/2011 24590-HLW-PCN-ENV-11-001

Hanford Facility RCRA Permit Modification Notification Form

Part III, Operating Unit 10

Waste Treatment and Immobilization Plant

Index

Page 2 of 3: Hanford Facility RCRA Permit, Part III, Operating Unit 10, Waste Treatment and Immobilization Plant
Replace mechanical data sheet for RLD-VSL-00007 and equipment assembly drawings for vessels RLD-VSL-00007 and RLD-VSL-00008 in Appendix 10.6 of the Dangerous Waste Permit (DWP).

Submitted by Co-Operator:

Donna Busche 6/20/11

D. M. Busche Date

Reviewed by ORP Program Office:

D. L. Noyes 9/6/11

D. L. Noyes Date

Quarter Ending 09/31/2011 24590-HLW-PCN-ENV-11-001

Hanford Facility RCRA Permit Modification Notification Form	
Unit: **Waste Treatment and Immobilization Plant**	Permit Part: **Part III, Operating Unit 10**

Description of Modification:

The purpose of this class 1 prime modification is to replace the mechanical data sheet for RLD-VSL-00007 and equipment assembly drawings for vessels RLD-VSL-00007 and RLD-VSL-00008 in Appendix 10.6 of the DWP.

The following permitted documents are submitted to replace the documents currently in Appendix 10.6:

Appendix 10.6			
Replace:	24590-HLW-MVD-RLD-00005, Rev 7	With:	24590-HLW-MVD-RLD-00005, Rev 9
	24590-HLW-MV-RLD-P0003, Rev 0		24590-HLW-MV-RLD-00025001, Rev 0
			24590-HLW-MV-RLD-00025002, Rev 0
			24590-HLW-MV-RLD-00025003, Rev 0
			24590-HLW-MV-RLD-00025004, Rev 0
	24590-HLW-MV-RLD-P0004, Rev 0		24590-HLW-MV-RLD-00004, Rev 1
			24590-HLW-MV-RLD-00019, Rev 0
			24590-HLW-MV-RLD-00020, Rev 0
			24590-HLW-MV-RLD-00021, Rev 0
			24590-HLW-MV-RLD-00022, Rev 0
			24590-HLW-MV-RLD-00024, Rev 0

This modification requests Ecology approval and incorporation into the permit the specific changes to the mechanical data sheet and equipment assembly drawings that are identified by clouds, triangles, and revision notes. The referenced documents include changes provided in applicable document change forms (e.g., DCN, SCN, SDDR, FCN, FCR, etc.) that were submitted to Ecology in accordance with Condition III.10.C.9.h. The updated drawings have been split and/or expanded from the previously approved permit drawings to provide more clarity and additional design details. The following identifies the major changes:

Mechanical data sheet 24590-HLW-MVD-RLD-00005, Rev 9:

- Updated P&ID, calculation, and vessel drawing numbers
- Added clarification regarding Materials of Construction for Internals, Pipe Seamless and Forging/Bar stock
- Updated Seismic reference
- Modified, added, and deleted Notes
- Revised Hydrodynamic Loading, PJM Overblow Loads, design pressures/temperatures for nozzles and nozzle loads
- Updated Equipment Cycling Data Sheet for Parent Vessel, PJMs, and Charge Vessels
- Added section Design Consideration for Loads Induced by Pulse Jet Mixers (PJMs)
- Revised Equipment Qualification data to new datasheet form and renumbered Notes for clarity
- Added Attachment 1, References for Datasheet

The source equipment assembly drawing for vessel RLD-VSL-00007 (24590-HLW-MV-RLD-00003, now superseded) was split/expanded into 4 drawings (24590-HLW-MV-RLD-00025001 through 00025004) to provide more clarity and section details.

The source equipment assembly drawing for vessel RLD-VSL-00008 (24590-HLW-MV-RLD-00004) was expanded from one to 6 drawings (24590-HLW-MV-RLD-00004, 00019 through 00022 and 00024) to show additional details regarding seismic guide/supports inside the vessel.

Quarter Ending 09/31/2011 24590-HLW-PCN-ENV-11-001

This modification requests Ecology approval and incorporation of the following outstanding change document(s) into the permit. Although not yet incorporated into the revised documents included in this PCN, the listed outstanding change document(s) are intended to be incorporated into the permit. These changes have been provided to Ecology in accordance with Condition III.10.C.9.h.

- Change documents for drawing 24590-HLW-MV-RLD-00004: 24590-HLW-MVN-RLD-00013, 24590-HLW-MVN-RLD-00014, 24590-HLW-MVN-RLD-00018, 24590-HLW-MVN-RLD-00021, 24590-HLW-MVN-RLD-00025, 24590-HLW-MVN-RLD-00028, 24590-QL-MRG-MVA0-00002-T0006 (Technical Change Notice, TCN)
- Change document for 24590-HLW-MV-RLD-00019: 24590-HLW-MVN-RLD-00027, 24590-QL-MRG-MVA0-00002-T0009
- Change document for 24590-HLW-MV-RLD-00022: 24590-HLW-MVN-RLD-00026
- Change documents for 24590-HLW-MV-RLD-00025001: 24590-HLW-MVN-RLD-00030, 24590-QL-MRA-MVA0-00027-T0002 (TCN)
- Change document for 24590-HLW-MV-RLD-00025004: 24590-HLW-MVN-RLD-00031, 24590-QL-MRA-MVA0-00027-T0002 (TCN)
- Change document for 24590-HLW-MVD-RLD-00005: 24590-QL-MRA-MVA0-00027-T0001 (TCN)

WAC 173-303-830 Modification Class:	Class 1	Class [1]1	Class 2	Class 3
Please mark the Modification Class:		X		

Enter relevant WAC 173-303-830, Appendix I Modification citation number: NA

Enter wording of WAC 173-303-830, Appendix I Modification citation:

In accordance with WAC 173-303-830(4)(d)(i), this modification notification is requested to be reviewed and approved as a Class [1]1 modification. WAC 173-303-830(4)(d)(ii)(A) states, "Class 1 modifications apply to minor changes that keep the permit current with routine changes to the facility or its operation. These changes do not substantially alter the permit conditions or reduce the capacity of the facility to protect human health or the environment. In the case of Class 1 modifications, the director may require prior approval."

Modification Approved/Concur: ☐ Yes ☐ Denied (state reason below) Reason for denial:	Reviewed by Ecology:
	J. J. Wallace Date

R11308236

MECHANICAL SYSTEMS DATA SHEET: VESSEL

PLANT ITEM No.
24590-HLW-MV-RLD-VSL-00007

ISSUED BY RPP-WTP PDC

Project:	RPP-WTP	P&IDs:	24590-HLW-M6-RLD-00001 and 00006
Project No:	24590	Calculation:	Attachment 1
Project Site:	Hanford	Vessel Drawing	24590-HLW-MV-RLD-00025001/-00025002/-00025003/-00025004 △9
Description:	Acidic Waste Vessel RLD-VSL-00007	Reports/Other Documents	Attachment 1

Reference Data

Charge Vessels (Tag Numbers)	RLD-VSL-00015A, RLD-VSL-00015B
Pulsejet Mixers / Agitators (Tag Numbers)	RLD-PJM-00005, RLD-PJM-00006, RLD-PJM-00007, RLD-PJM-00008
RFDs/Pumps (Tag Numbers)	RLD-RFD-00162A, RLD-RFD-00162B

Design Data

Quality Level		Q (Note 15)	Fabrication Specs	24590-WTP-3PS-MV00-T0001		
Seismic Category		SC-2	Design Code	ASME VIII Div 1		
Service/Contents		Radioactive Liquid	Code Stamp	Yes		
Design Specific Gravity		1.0	NB Registration	Yes		
Maximum Operating Volume	gal	15,758 (Note 3)	Weights (lbs)	Empty	Operating	Test
Total Volume	gal	18,145 (Note 3)	Estimated	43,000	186,000	194,000
Environmental Qualification		See EQ Sections				

Inside Diameter	inch	156			Wind Design	Not Required	
Length/Height (TL-TL)	inch	186			Snow Design	Not Required	
		Vessel Operating	Vessel Design	Coil/Jacket Design	Seismic Design	24590-WTP-3PS-MV00-T0002 24590-WTP-3PS-SS90-T0001	
Internal Pressure	psig	Atm	15	None			
External Pressure	psig	0.83	FV	None	Postweld Heat Treat	Not Required	
Temperature	°F	195	220 (Note 21)	None	Corrosion Allowance	inch	0.04 (Note 10 & 11)
Min. Design Metal Temp.	°F	40					

Materials of Construction

Component	Material	Minimum Thickness / Size	Containment
Top Head	SB 688 N08367	See Drawing	Auxiliary (Note 4)
Shell	SB 688 N08367	See Drawing	Primary (Note 4)
Bottom Head	SB 688 N08367	See Drawing	Primary (Note 4)
Support	SA 240 304 (Note 2)	See Drawing	N/A
Jacket/Coils/Half-Pipe Jacket	N/A	N/A	N/A
Internals △9	SB 688 N08367 (for pulse jet mixers, charge vessels, & internal supports)	See Drawings & Note 22.	N/A
Pipe Seamless △9	SB 690 N08367(for thermal sleeves & bubbler piping for N40A/B/C & N42A/B/C) / SB 622 N06022 (for all other internal piping, thermowells, and nozzles)	See Drawings & Note 22	Notes 1 and 4 ; thermowells are primary
Forgings/ Bar stock △9	SB 564 N08367; SB 564 N06022 (for thermal nozzles, nozzles, & thermowells)	See Drawings & Note 22.	Thermal nozzles & thermowells are primary
Gaskets	N/A	N/A	N/A
Bolting	N/A	N/A	N/A

Miscellaneous Data

Orientation	Vertical	Support Type	Skirt
Insulation Function	Not Applicable	Insulation Material	Not Applicable
Insulation Thickness (inch)	Not Applicable	Internal Finish	Descaled as laid
		External Finish	Descaled as laid

Please note that source, special nuclear, and byproduct materials, as defined in the Atomic Energy Act of 1954 (AEA) are regulated at the U. S. Department of Energy (DOE) facilities exclusively by DOE acting pursuant to its AEA authority. DOE asserts that pursuant to AEA, it has sole and exclusive responsibility and authority to regulate source, special nuclear, and byproduct materials at DOE-owned nuclear facilities. Information contained herein on radionuclides is provided for process description purposes only.

Notes/Remarks

* To be determined by the vendor.

Note 1: *Nozzle necks below the high operating liquid level are Primary, others Auxiliary.*

Note 2: *Material shall have Carbon Content of 0.030% Max. Non-welded specialty items are excluded from this requirement.*

Note 3: *Vessel volumes are approximate and do not account for manufacturing tolerances, nozzles, and displacement of internals.*

Note 4: *All welds forming part of the primary and auxiliary containment including nozzle attachment welds shall be subjected to 100% volumetric examination.*

Note 5: *This vessel is located in a Black Cell.*

Note 6: *Contents of this document are Dangerous Waste Permit affecting.*

Note 7: *As a minimum, all welds on internal components and supports shall be dye-penetrant tested.*

Note 8: *Deleted.*

Note 9: *Deleted as per Report No. 24590-WTP-RPT-M-04-0007 Rev. 0 dated 29 Oct 2004.*

Note 10: *Seller shall ensure that an additional 0.10" is available for erosion in the bottom head and shall report the minimum thickness required for all specified loading conditions, exclusive of erosion and corrosion allowances.*

Note 11: *Seller shall ensure that an additional 0.05" is available for erosion in the interior conical surface of the pulse jet mixers.*

Note 12: *Deleted.*

Note 13: *This revision of the data sheet incorporates SDDR No. 24590-WTP-SDDR-PROC-04-00670 by reference.*

Note 14: *Required data for thermal stress analysis for the nozzle exposed to higher temperatures:*

- *Hot ejector transfers from vessel (Ejectors RLD-EJCTR-00008, -00050, -00056, & -00059):*
  - *a. Only one of the hot ejectors will be used at a time during transfers.*
  - *b. Transfer frequency = 1 transfer/24 hrs for 5.4 hrs; steam mass flow rate = 1423 lb/hr.*

Note 15: *Vessel to be designed, fabricated, tested to L-2 requirements defined in 24590-WTP-3PS-MV00-T0001.*

Note 16: *All hydrodynamic and overblow loads shall be included with the seismic analysis as per this data sheet.*

Note 17: *Please note that source, special nuclear and byproduct materials, as defined in the Atomic Energy Act of 1954 (AEA), are regulated at the U.S. Department of Energy (DOE) facilities exclusively by DOE acting pursuant to its AEA authority. DOE asserts, that pursuant to the AEA it has sole and exclusive responsibility and authority to regulate source, special nuclear, and byproduct materials at DOE-owned nuclear facilities. Information contained herein on radionuclides is provided for process description purposes only.*

Note 18: *The vessel design shall account for buoyancy effects due to the room flood height of 22 ft. assuming the vessel is empty (worst case).*

Note 19: *Revision 7 revises quality level, design specific gravity, operating & design temperature, operating external pressure, deleted weld overlay around ejector nozzles, added Notes 15 - 19, revised cyclic data, cyclic notes for parent vessel, hydrodynamic info, E&NS Safety Screen box, and added E&NS signature box. Added sections for MOB, revised Nozzle Loads, DOE Radioactive Materials Disclaimer (Note 17), Table of Nozzle Connections, and Equipment Qualification Datasheet.*

Note 20: *Revised Equipment Qualification data to new datasheet form and renumbered Equipment Qualification Notes for clarity. Revised Hydrodynamic Loading, PJM Overblow Loads, design pressures/temperatures for nozzles and Nozzle Loads.*

Note 21: *Design Guide 24590-WTP-GPG-M-050 states that design temperature shall be 25°F over maximum operating temperature.*

Note 22: *Materials are consistent with Calc. No. 24590-HLW-MVC-RLD-00009, Section 2.2.*

Seismic

Seismic Response Spectra curves: Figures 549, 550, and 552 from calculation 24590-HLW-S0C-S15T-00057 (See CCN 185273). Seismic analysis to be combined with operating conditions, single overblow, and any sloshing loads imposed. Sloshing loads on vessel internals are considered per ASCE 4-98. Analysis to consider worst case seismic loads on the vessel proper and on the vessel internals. The response curves and sloshing loads will be provided via the Material Requisition.

Equipment Cyclic Data Sheet - Parent Vessel

Component Plant Item Number:	*24590-HLW-MV-RLD-VSL-00007*
Component Description	*Parent Vessel*

The information below is provisional and envelopes operational duty for fatigue assessment. It is not to be used as operational data.

Materials of Construction	*SB 688 N08367*
Design Life	*40 years*
Component Function and Life Cycle Description	*See Calculation 24590-HLW-MVC-11-00002.*

Load Type		Min	Max	Number of Cycles	Comment
Design Pressure	psig	*FV*	*15*	*10*	*Nominal assumption*
Operating Pressure	psig	*-6.0*	*0*	*3.8E7*	*Equipment Cyclic Data Sheet Note 3 (Parent Vessel)*
Operating Temperature	°F	*59*	*195*	*14,600*	*Equipment Cyclic Data Sheet Note 4 (Parent Vessel)*
Contents Specific Gravity		*1.0*	*1.0*	*N/A*	
Contents Level	inch	*Empty*	*Flooded*	*14,600*	*One cycle per day.*

Localized Features		
Nozzles	*Within 50°F of operating temperature range except as noted below*	*Normal operations will cause Superheated Steam at 358 °F design temperature to enter the vessel through the transfer ejectors (Nozzles N31, N32, N33 N39) once per day and through the emptying ejectors (Nozzles N13, N34, N35, N38) once per month.*
Air Inlet		
Delivery		
Supports		

Equipment Cyclic Data Sheet Notes - Parent Vessel

Note 1: *Cycle Increase: The Seller must increase the numbers of operational cycles given above by 10% to account for commissioning duty unless otherwise noted.*

Note 2: *Perform fatigue assessment/analysis for the following nozzles and associated piping over 40 years from 0 psig at 59 °F to the pressure and temperature indicated in the Table of Nozzle Connections for the pressure/temperature cycles indicated (pressure cycles shall coincide with temperature cycles):*

a) *N27, N28, N31, N32, N33, N39 - 14,600 cycles*

b) *N13, N17, N18, N19, N34, N35, N38 - 480 cycles*

Note 3: *Values are bounding from Case 1 (-6.0 to 0.0 psig for 14,600 cycles) and Case 2 (-0.83 to -0.18 psig for 3.8E7 cycles) per 24590-HLW-MVC-30-00001, Appendix A, Sheet A-8.*

Note 4: *195°F value is conservative and used to provide design margin on 149°F minimum required value found in Reference 24590-HLW-MVC-30-00001, Rev B (24590-HLW-MVE-30-00001).*

Equipment Cyclic Data Sheet - PJMs

Component Plant Item Number:	*RLD-PJM-00005, RLD-PJM-00006, RLD-PJM-00007 & RLD-PJM-00008*
Component Description	*Pulse Jet Mixers*

The information below is provisional and envelopes operational duty for fatigue assessment. It is not to be used as operational data.

Materials of Construction		*SB 688 N08367*			
Design Life		*40 years*			
Component Function and Life Cycle Description		*This component is part of a mixing system. It repeatedly floods and empties. The action is caused by vacuum or air pressure being presented to the top nozzle. The surrounding parent vessel may contain any level of the fluid between the maximum operating level and the heel level. The PJM is subjected to buoyancy forces when immersed in the parent vessel contents. The internal vessel is in cyclic duty.*			
Load Type		Min	Max	Number of Cycles	Comment
Design Pressure	psig	*FV*	*135*	*100*	*Nominal assumption*
Operating Pressure	psig	*F V*	*14*	*3.8E7*	*Max. Operating*
Operating Temperature	°F	*59*	*195*	*NA*	*Same as parent vessel*
Contents Specific Gravity		*1.0*	*1.0*	*NA*	*Same as parent vessel*
Contents Level	inch	*Empty*	*Flooded*	*3.8E7*	*Coincident with pressure cycles*
Thrust	lbf	*-262*	*262*	*3.8E7*	*See Note below*
Localized Features					
Nozzles					
Air Inlet					
Delivery					
Supports		*As above*		*As above with contents level changing coincident with pressure cycles.*	

Equipment Cyclic Data Sheet Notes - PJMs

- ***Cycle increase: The Seller must increase the numbers of operational cycles given above by 10% to account for commissioning duty unless otherwise noted.***
- ***PJMs inside parent vessels shall have buoyancy effects considered. PJMs shall consider the liquid thrust effect. The PJM supports shall be designed to cycle between fully buoyant (PJM empty and parent vessel full) and fully loaded (PJM full and parent vessel empty) states. Thrust load shall be applied only to the fully buoyant state. Assume the parent vessel is full for 50% of the number of PJM cycles.***

Equipment Cyclic Data Sheet - Charge Vessels

Component Plant Item Number:	*RLD-VSL-00015A, RLD-VSL-00015B*
Component Description	*Charge Vessels*

The information below is provisional and envelopes operational duty for fatigue assessment. It is not to be used as operational data.

Materials of Construction	*SB 688 N08367*
Design Life	*40 years*
Component Function and Life Cycle Description	*This component is part of a pumping system. It repeatedly floods and empties. The action is caused by vacuum or air pressure being presented to the top nozzle. The surrounding parent vessel may contain any level of the fluid between the maximum operating level and the heel level. The charge vessel is subjected to buoyancy forces when immersed in the parent vessel contents. The vessel is in cyclic duty.*

Load Type		Min	Max	Number of Cycles	Comment
Design Pressure	psig	*FV*	*135*	*100*	*Nominal assumption*
Operating Pressure	psig	*FV*	*60*	*14,600*	
Operating Temperature	°F	*59*	*195*	*14,600*	*Same as parent vessel*
Contents Specific Gravity		*1.0*	*1.0*	*14,600*	*Same as parent vessel*
Contents Level	inch	*Empty*	*Flooded*	*14,600*	*Coincident with pressure cycles*
Localized Features					
Nozzles					
Air Inlet					
Delivery					
Supports		*buoyant to loaded*		*14,600 cycles*	

Equipment Cyclic Data Sheet Notes - Charge Vessels

- ***Cycle Increase: The Seller must increase the numbers of operational cycles given above by 10% to account for commissioning duty unless otherwise noted.***
- ***CVs inside parent vessels shall have buoyancy effects considered.***

Design Considerations for Loads Induced by Pulse Jet Mixers (PJMs)

Pulse Jet Mixers (PJMs) are designed to mix the vessel contents using a liquid jet discharge. PJMs are driven by compressed air. The mixing is required to enhance heat transfer, to break up hydrogen-containing particles, and to homogenize the solution. Normally, the PJMs are operated simultaneously within the parent vessel.

The PJMs operate in the following three cycles: Suction, Drive and Vent. During the suction cycle a vacuum is created in the PJM headspace and the level within the PJM rises to fill the PJM. During the drive cycle the PJM is pressurized and liquid is discharged. During the vent cycle, the pressure in the headspace approaches atmospheric and the level within the PJM is allowed to reach equilibrium.

Vessel components shall be designed to withstand loading induced by PJM operations as described herein.

Normal Operations: Liquid flows around internal structures within the parent vessel producing hydrodynamic loads such as drag and vortex shedding.

To mitigate the dynamic effects, the following pipe sizes dipped internal to the vessel are required to have a minimum first natural frequency that is double the vortex shedding frequency:

Nominal Pipe Size	Minimum First Natural Frequency
1 inch	13.2 Hz*
2 inch	7.4 Hz*
3 inch	5.0 Hz**

* See 24590-WTP-MVC-50-00001, Section 8.1.2.2 for vortex shedding frequency (4 PJM Class)

** By extrapolation from 1 inch and 2 inch

Overblow Condition: Occasionally the drive cycle lasts too long and compressed air is discharged from the PJM. Overblows can also occur during system calibration. One or multiple PJMs may overblow at any time. These conditions induce acoustic and bubble rise loads on structures.

All internal components shall be designed for the combination of normal operational hydrodynamic loads and overblow loads. Single overblows (SOB) are assumed to act concurrently with the seismic event, however multiple overblows (MOB) are not assumed to act concurrently with the seismic event. Figure 1 (below) provides the acoustic load intensity that encompasses both SOB and MOB.

Hydrodynamic Loads Due to Normal PJM Operations

Normal operation imposes a cyclical load as described in the following table:

4 PJM Class	Radial Direction		Axial Direction	
	Peak Positive (psi)	Peak Negative (psi)	Peak Positive (psi)	Peak Negative (psi)
Targets between vessel Center and PJM	0.3	-0.2	0.25	-0.2
Targets between PJM and vessel outer wall	0.8	-0.8	0.4	-0.8

The hydrodynamic pressure applies across the projected area of the component. Positive hydrodynamic forces act in the radial, outward direction and the vertical, upward direction. Seller shall apply the radial load simultaneously in the radial direction and normal to the radial direction in the horizontal plane.

PJM Overblow Loads

Discussion: *During normal operation, pulse jet mixers (PJMs) mix the fluid by pulling in (suction) and pushing out (drive) fluid. During an upset condition, designated as an 'overblow', air is discharged following the drive cycle of one or more PJMs. The load consists of acoustic pressure (2Hz to 200Hz) developed in the first 200ms of the event and a load due to the bubble rising through the fluid.*

The acoustic load and the bubble load are design loads as defined by ASME B&PVC, Section 8, Division 1, UG-22, applied statically. The acoustic load is not added to the bubble rise load because they occur at different times during the overblow event.

Acoustic Load

- ***The acoustic design load in Figure 1 is applied to the visible (as viewed from the overblow origin) surface of cylindrical targets such as pipes, charge vessels, and PJMs. The load is applied in the direction normal to the principal axis of the target as illustrated in Figure 2. Note: The intended net effective load on the target is equal to the projected (i.e. cross-sectional) area of the object times the acoustic design load (psi) indicated in Figure 1.***
- ***Each target is considered independent of the surrounding targets: e.g. the surrounding targets do not impede the acoustic wave by casting a shadow, as illustrated in Figure 2.***
- ***The load is not applied to small supports such as gussets, brackets, tabs, clamps, and bolts because they are rigid and the pressure drop across the target is negligible.***
- ***When the vessel contains multiple PJMs, the load from one PJM is independent of the load from other PJMs. The loads are not additive for multiple overblows.***
- ***No internal components shall be placed within 5 PJM nozzle diameters (5 * 4 in = 20 in) of a spherical zone centered at any overblowing PJM nozzle.***

Figure 1: Acoustic Design Load

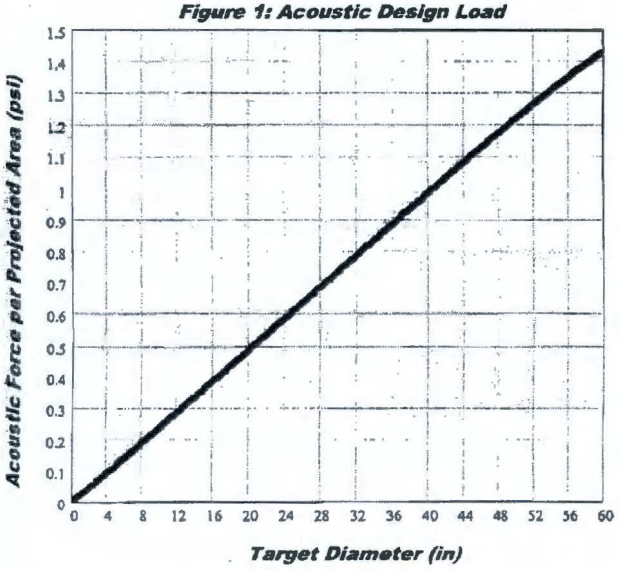

Figure 2: Load Application

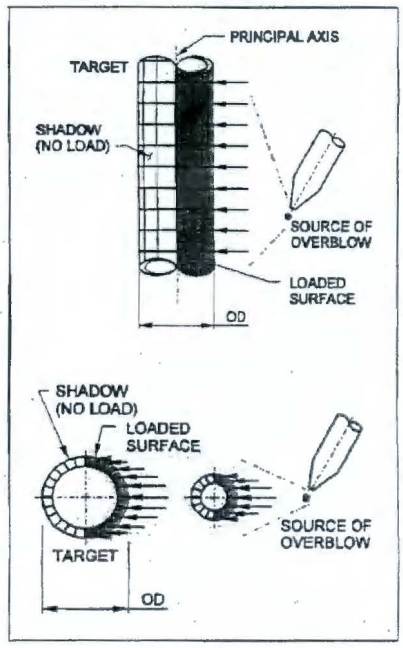

The following data is required to determine the load:

- ***Target Diameter***
- ***Target Principal Axis***

Overblow Source Coordinates

Number of Acoustic Cycles

1000 events X 40 cycles/event for a total of 40,000 acoustic cycles.

Bubble Rise Load

A vertical force per projected area of 1.7 psi is applied to the surfaces in the 36-inch diameter cylindrical zone centered at the overblowing PJM(s). The bubble can be at any elevation above the overblowing PJM and only affects one zone (36-inch diameter region) at a time. When there are multiple PJMs in a vessel (MOB), each PJM has it's own bubble. To simplify analysis the bubble can be applied in a continuous cylindrical zone above each PJM top head.

Number Bubble Rise Cycles

1000 events X 1 cycle/event

Nozzle Loads

Nozzle Number	Nozzle Size (in)	Orientation (V* / H**)	Load Case	Design Loads (Force in lbs, Moment in ft-lb)					
				Fx	Fy	Fz	Mx	My	Mz
N02	2	V	Weight	34	70	34	46	29	29
			Seismic	244	162	244	398	597	597
			Thermal	46	130	62	240	150	150
N03	2	V	Weight	34	56	34	46	29	29
			Seismic	244	162	244	398	597	597
			Thermal	46	41	62	75	150	150
N04	2	V	Weight	34	56	34	46	29	29
			Seismic	244	162	244	398	597	597
			Thermal	46	130	62	250	150	150
N05	2OD	V	Weight	34	56	34	46	29	29
			Seismic	244	162	244	398	597	597
			Thermal	46	41	62	75	150	150
N06	2OD	V	Weight	34	56	34	46	29	29
			Seismic	244	162	244	398	597	597
			Thermal	46	41	62	75	150	150
N07	1.5	V	Weight	20	32	20	26	16	16
			Seismic	138	92	138	228	342	342
			Thermal	80	170	130	200	86	160
N08	1.5	V	Weight	20	32	20	26	16	16
			Seismic	138	92	138	228	342	342
			Thermal	26	50	50	43	86	86
N09	2OD	V	Weight	34	56	34	46	29	29
			Seismic	244	162	244	398	597	597
			Thermal	46	220	62	100	150	150
N10	2	V	Weight	34	90	34	46	29	29
			Seismic	244	162	244	398	597	597
			Thermal	46	120	62	110	150	240
N11	2	V	Weight	34	56	34	46	29	29
			Seismic	244	162	244	398	597	597
			Thermal	120	70	62	110	150	290
N12	2	V	Weight	34	56	34	46	29	29
			Seismic	244	162	244	398	597	597
			Thermal	90	41	62	75	150	200
N13	2	V	Weight	34	100	34	46	29	29
			Seismic	244	162	244	398	597	597
			Thermal	90	520	150	270	150	240
N15	2	V	Weight	34	56	34	46	29	29
			Seismic	244	162	244	398	597	597
			Thermal	46	60	62	75	150	150
N16	2	V	Weight	34	56	34	46	29	29
			Seismic	244	162	244	398	597	597
			Thermal	70	41	62	75	150	210

Nozzle Number	Nozzle Size (in)	Orientation (V* / H**)	Load Case	Design Loads (Force in lbs, Moment in ft-lb)					
				Fx	Fy	Fz	Mx	My	Mz
N17	3	V	Weight	70	130	70	140	180	110
			Seismic	245	163	245	783	523	790
			Thermal	210	185	250	1080	222	665
N18	3	V	Weight	70	130	70	115	115	115
			Seismic	245	163	245	783	523	783
			Thermal	210	640	330	1270	222	665
N19	4	V	Weight	120	192	120	342	214	214
			Seismic	834	557	834	2960	4440	4440
			Thermal	159	550	212	563	1125	1125
N20	2OD	V	Weight	34	56	34	46	29	29
			Seismic	244	162	244	398	597	597
			Thermal	46	80	62	75	150	150
N21	2OD	V	Weight	34	56	34	46	29	29
			Seismic	244	162	244	398	597	597
			Thermal	46	41	62	100	150	150
N22	2	V	Weight	34	56	34	46	29	29
			Seismic	244	162	244	398	597	597
			Thermal	46	41	62	75	150	150
N23	2	V	Weight	34	100	34	46	29	29
			Seismic	244	162	244	398	597	597
			Thermal	46	41	62	150	150	150
N26	2	V	Weight	34	56	34	46	29	29
			Seismic	244	162	244	398	597	597
			Thermal	46	41	110	470	150	150
N27	2	V	Weight	34	80	34	46	29	29
			Seismic	244	162	244	398	597	597
			Thermal	46	170	160	550	150	150
N28	2	V	Weight	34	90	34	46	29	50
			Seismic	244	162	244	398	597	597
			Thermal	46	100	130	430	150	150
N31	2	V	Weight	34	80	34	46	29	29
			Seismic	244	162	244	398	597	597
			Thermal	46	310	200	780	150	150
N32	2	V	Weight	34	56	34	46	29	29
			Seismic	244	162	244	398	597	597
			Thermal	46	90	110	410	150	150
N33	2	V	Weight	34	56	34	46	29	29
			Seismic	244	162	244	398	597	597
			Thermal	46	280	170	600	150	150
N34	2	V	Weight	34	56	34	46	29	29
			Seismic	244	162	244	398	597	597
			Thermal	80	320	170	590	150	150

Nozzle Number	Nozzle Size (in)	Orientation (V* / H**)	Load Case	Design Loads (Force in lbs, Moment in ft-lb)					
				Fx	Fy	Fz	Mx	My	Mz
N35	2	V	Weight	34	56	34	46	29	29
			Seismic	244	162	244	398	597	597
			Thermal	46	310	190	710	150	150
N37	1.5	V	Weight	20	32	20	26	16	16
			Seismic	138	92	138	228	342	342
			Thermal	26	40	35	43	86	86
N38	2	V	Weight	34	110	34	46	29	29
			Seismic	244	162	244	398	597	597
			Thermal	46	210	62	180	150	150
N39	2	V	Weight	34	80	34	46	29	29
			Seismic	244	162	244	398	597	597
			Thermal	46	240	160	590	150	150
N41	8	H	Weight	310	500	310	490	615	615
			Seismic	325	325	325	786	1180	1180
			Thermal	1050	530	595	2070	2320	1920
N43	2	V	Weight	34	90	34	46	29	29
			Seismic	244	162	244	398	597	597
			Thermal	46	170	62	170	150	260
N48	1.5	V	Weight	20	60	20	26	16	16
			Seismic	138	92	138	228	342	342
			Thermal	26	140	90	190	86	86

Notes for Nozzle Loads

A. V = vertical head nozzle - values are x = North/South, y = vertical, z = East/West (global coordinates), Vessel defined as North.

B. H = horizontal shell nozzle - values are per axes shown in 24590-WTP-3PS-MV00-T0001, Appendix A (local coordinates).

C. Nozzle loads shown in the above table (CCN 177071) are to be used in place of those specified in 24590-WTP-3PS-MV00-T0001, Appendix A, – do not apply any thermal reduction factors.

D. Nozzle loads not listed in the above table are listed in 24590-WTP-3PS-MV00-T0001, Appendix A.

Table of Nozzle Connections

Internal vessel piping and nozzle design shall be compatible with the following **external** connection pipe size and pressure/temperature conditions outside the vessel:

Nozzle	Connecting Pipe Size	Design Pressure (psig)	Design Temperature (°F)
N01	2" - 40S	135	113
N02	2" - 40S	135	113
N03	2" - 40S	135	113
N04	2" - 40S	135	113
N05	1" - 40S	135	113
N06	1" - 40S	135	113
N07	1-1/2" - 40S	15	165
N08	1-1/2" - 40S	15	165
N09	1" - 40S	110	200
N10	2" - 40S	110	200

Nozzle	Connecting Pipe Size	Design Pressure (psig)	Design Temperature (°F)
N11	2" - 40S	109	358
N12	2" - 40S	109	358
N13	2" - 40S	109	358
N14	CAPPED	N/A	N/A
N15	2" - 40S	109	358
N16	2" - 40S	109	358
N17	3" - 40S	50	225
N18	3" - 40S	50	225
N19	4" - 40S	50	225
N20	1" - 40S	15	113
N21	1" - 40S	15	113
N22	2" - 40S	135	113
N23	2" - 40S	135	113
N24	DELETED	N/A	N/A
N25	DELETED	N/A	N/A
N26	2" - 40S	-14.7	200
N27	2" - 40S	109	358
N28	2" - 40S	109	358
N29	DELETED	N/A	N/A
N30	DELETED	N/A	N/A
N31	2" - 40S	109	358
N32	2" - 40S	135	358
N33	2" - 40S	135	358
N34	2" - 40S	135	358
N35	2" - 40S	135	358
N36	1-1/2" - 40S	15	165
N37	1-1/2" - 40S	15	165
N38	2" - 40S	109	358
N39	2" - 40S	109	358
N40	6" - 40S	Parent (Pressure and temperature is same as design (15 psig and 220°F)	
N40A	1/2" - 40S	15	113
N40B	1/2" - 40S	135	113
N40C	1/2" - 40S	135	113
N41	8" - 10S	50	200
N42	6" - 40S	Parent (Pressure and temperature is same as design (15 psig and 220°F)	
N42A	1/2" - 40S	15	113
N42B	1/2" - 40S	135	113
N42C	1/2" - 40S	135	113
N43	2" - 40S	110	200
N44	1" - 40S	110	200
N45	DELETED	N/A	N/A
N46	DELETED	N/A	N/A
N47	1/2" - 80S	-14.7	113
N48	1-1/2" - 80S	109	358

EQUIPMENT QUALIFICATION DATASHEET (EQD)

Equipment Identification		
Full Component Tag Number or BNI Stock Code Number	24590-HLW-MV-RLD-VSL-00007	Safety Classification ☐ SC ☒ SS ☐ APC-PAM
Equipment Datasheet Number	24590-HLW-MVD-RLD-00005	
Description	Radioactive Liquid Waste Disposal System (RLD) Acidic Waste Vessel.	Seismic Category ☐ SC-I ☒ SC-II ☐ SC-III ☐ SC-IV ☐ SC-III Seismic Interaction only
Location (Facility / Building and Room No.)	HLW Building; located in Room H-B014, Elev. (-) 21'-00", Column lines J/11.5.	
Safety Function(s)	The vessel provides primary confinement of the HLW process waste streams. Reference: 24590-WTP-PSAR-ESH-01-002-04, Section 4.4.16.2, Preliminary Documented Safety Analysis to Support Construction Authorization; HLW Facility Specific Information.	
Equipment Safety Function Type	☒ Passive Mechanical ☐ Active Mechanical	☐ Electrical
Seismic Safety Function ☒ Yes ☐ No	Seismic Operability Requirements ☐ During Seismic Event ☐ After Seismic Event	☒ None

Equipment Environmental Qualification (EEQ)

(Parameter values stated in this section do not include process conditions or operation induced conditions)

Classification of Environment ☒ Mild ☐ Harsh

Qualified Life (years) ☒ 40 ☐ Other

Parameter Type/Units	Parameter Value	Parameter Duration (number)	Duration Units	WTP Source Document Number
Normal Ambients				
High Temperature (°F)	113	Note a	Years	24590-HLW-U0D-W16T-00001, E-Note 1
Low Temperature (°F)	59	Note b	N/A	24590-HLW-U0D-W16T-00001, E-Note 1
High Relative Humidity (%RH)	100	Note c	N/A	24590-HLW-U0D-W16T-00001, E-Note 1
Low Relative Humidity (%RH)	5	Note c	N/A	24590-HLW-U0D-W16T-00001, E-Note 1
High Pressure (in.-w.g.)	0 (E-Note 2)	Note d	N/A	24590-HLW-U0D-W16T-00001, E-Note 1
Low Pressure (in.-w.g.)	(-) 1.1 (E-Note 2)	Note d	N/A	24590-HLW-U0D-W16T-00001, E-Note 1
Radiation Dose Rate (mRad/hr)	105000 (E-Note 4)	40 (E-Note 3)	Years (Note e-1)	24590-HLW-U0D-W16T-00001, E-Note 1
Plant/Process Induced Vibration	☐ Yes ☒ No			
Additional Normal Ambient Information:	N/A			

EQUIPMENT QUALIFICATION DATASHEET (EQD)

Equipment Environmental Qualification (EEQ) *(continued)*

Parameter Type/Units	Parameter Value	Parameter Duration (number)	Duration Units	WTP Source Document Number
Abnormal Ambients				
High Temperature (°F)	113	8	hours / year	24590-HLW-U0D-W16T-00001, E-Note 1
Low Temperature (°F)	40	Note b	N/A	24590-HLW-U0D-W16T-00001, E-Note 1
High Relative Humidity (%RH)	100c	Note c	N/A	24590-HLW-U0D-W16T-00001, E-Note 1
Low Relative Humidity (%RH)	10	Note c	N/A	24590-HLW-U0D-W16T-00001, E-Note 1
High Pressure (in.-w.g)	4 (E-Note 2)	Note d	N/A	24590-HLW-U0D-W16T-00001, E-Note 1
Low Pressure (in.-w.g)	(-) 6.7 (E-Note 2)	Note d	N/A	24590-HLW-U0D-W16T-00001, E-Note 1
Radiation Dose Rate (mR/hr)	105000 (E-Note 4)	0 (E-Note 3)	Years (Note e-1)	24590-HLW-U0D-W16T-00001, E-Note 1
Exposure to Wet Sprinkler System	☐ Yes ☒ No	N/A	hours	24590-HLW-U0D-W16T-00001, E-Note 1
Additional Abnormal Ambient Information	N/A			
Design Basis Events (DBE) Ambients				
High Temperature (°F)	123	1000	hours	24590-HLW-U0D-W16T-00001, E-Note 1
Low Temperature (°F)	40	Note b	N/A	24590-HLW-U0D-W16T-00001, E-Note 1
High Relative Humidity (%RH)	100c	40	hours	24590-HLW-U0D-W16T-00001, E-Note 1
Low Relative Humidity (%RH)	8	1000	hours	24590-HLW-U0D-W16T-00001, E-Note 1
High Pressure (in.-w.g)	4	8	hours	24590-HLW-U0D-W16T-00001, E-Note 1
Low Pressure (in.-w.g)	(-) 6.7 (E-Note 2)	1000	hours	24590-HLW-U0D-W16T-00001, E-Note 1
Radiation Dose Rate (mR/hr)	105000 (E-Note 4)	0 (E-Note 3)	hours	24590-HLW-U0D-W16T-00001, E-Note 1
Submergence	☐ Yes ☒ No	N/A	hours	24590-HLW-U0D-W16T-00001, E-Note 5
Chemical/Spray Exposure	☒ Yes ☐ No	12.5	hours	24590-HLW-U0D-W16T-00001, E-Note 1
Additional DBE Information	N/A			

DBE Chemical Exposure Details		
DBE Chemical Types / Concentrations	Nitric Acid	1M
	Sodium Hydroxide	5M

EQUIPMENT QUALIFICATION DATASHEET (EQD)

Electrical Interfaces Supporting the Safety Function	
Power Supply Voltage (VAC, VDC)	N/A
Power Supply Frequency (Hz)	N/A
Power Connection Method	N/A
I/O Signals to/from Equipment	N/A
I/O Connection Method	N/A

Mechanical Interfaces	
Mounting Configuration (orientation)	Vertically Mounted , Skirt
Mounting Method (bolts, welds, etc.)	Bolted Anchor Chairs
Auxiliary Devices	Charge Vessels RLD-VSL-00015A, RLD-VSL-00015B, Pulse Jet Mixers RLD-PJM-00005, RLD-PJM-00006, RLD-PJM-00007, RLD-PJM-00008, Reverse Flow Diverters RLD-RFD-00162A, RLD-RFD-00162B; all devices are internal to the parent vessel.

Equipment Seismic Qualification (ESQ)

Parameter	Title	Reference/Document Number	Version / Revision	Remarks
WTP Seismic Design Specification	Engineering Specification for Seismic Qualification of Seismic Category I/II Equipment and Tanks Engineering Specification for Seismic Qualification Criteria for Pressure Vessels	24590-WTP-3PS-SS90-T0001 24590-WTP-3PS-MV00-T0002	2 2	N/A
Specified Seismic Load Parameters	HLW Vitrification Building Seismic Analysis - WSGM In-Structure Response Spectre (ISRS)	24590-HLW-S0C-S15T-00057	A	CCN: 185273; WSGM ISRS Curves: Figures 549, 550, and 552

Equipment Qualification Notes and Additional Information

Note a) For thermal aging, the high normal temperature shall be assumed to subsist for 40 years less the duration of the high abnormal temperature. For any lesser qualified life, the normal and abnormal condition durations shall be assigned proportionally. The abnormal temperature is stated to subsist for a certain number of hours per year. It shall be taken to subsist for this number of hours for each year of the qualified life.

Note b) The ability to provide the safety function at the low normal temperature, the low abnormal temperature or the low DBE temperature (whichever be the lowest) shall be established by test, analysis, or operating experience. The thermal aging at these respective low temperatures will be conservatively covered by the thermal aging per item a) above. Therefore, no duration is assigned for the low temperatures.

Note c) The ability to provide the safety function at the extremes of the normal and abnormal humidity conditions, taking into consideration the high and the low normal and high and low abnormal, shall be established by test, analysis, or operating experience. No duration is assigned for the normal and abnormal humidity conditions.

Note d) If the performance of the safety function of the equipment is affected by ambient pressure, the ability to provide the safety function at the extremes of the normal and abnormal pressure conditions, taking into consideration the high and the low normal and the high and low abnormal pressures, shall be established by test, analysis, or operating experience. No duration is assigned to the normal and abnormal pressure conditions.

Note e) (1) If the abnormal radiation dose rate is the same as the normal radiation dose rate, the normal radiation dose rate shall be assumed to subsist for 40 years, or any lesser qualified life, and the duration of the abnormal radiation dose rate is "0."

(2) If the abnormal radiation dose rate is higher than the normal radiation dose rate, the abnormal radiation dose rate shall be assumed to subsist for 40 years, or any lesser qualified life, and the duration of the normal radiation dose rate is "0."

Note f) The DBE conditions shall be taken to subsist for the stated number of hours following the qualified life of the equipment.

Note g) Spray due to fire sprinkler actuation shall be taken to occur once over the entire qualified life duration for a period of 2 hours, even if the qualified life is a period less than 40 years. If spray qualification is provided for DBE conditions (whether for water or chemical spray), then separate qualification for the fire sprinkler spray need not be provided.

Note h) The values stated in this EQD are the ambients and do not include the thermodynamic and radiation conditions imposed by the process fluids, self-

Equipment Qualification Notes and Additional Information

heating, etc. The data pertaining to process fluid and service induced parameters are to be taken into account where significant, such as in thermal aging analyses. These data can be obtained from the equipment data sheets or the Equipment Specification.

Note i) Equipment that is to be installed in inaccessible locations must be qualified to a 40-year life without the need for maintenance or replacement.

E-Note 1: BNI (BUYER) shall perform Equipment Environmental Qualification in accordance with 24590-WTP-DC-ENG-06-001, Design Criteria for Equipment Seismic and Environmental Qualification.

E-Note 2: Where pressure is given in inches of water column (in-w.c.) in the source document, it is generally assumed that this is in reference to atmospheric pressure and is therefore equivalent to inches of water gage (in-w.g.).

E-Note 3: Normal, Abnormal, and DBE dose rates are the same, therefore, abnormal and DBE doses do not add to total integrated dose based on normal dose rates over 40 years.

E-Note 4: Radiation Dose Rates are for determining shielding requirements only for the black cell and are not at the source (vessel). Since the vessel is all metallic and the source has no neutron components for material embrittlement, the dose rates are of no concern on the vessel or its subcomponents.

E-Note 5: Flood height for room is 22 ft above the cell floor (cell floor is at -21' elevation), a buoyancy evaluation has to be performed where vessel is treated as fully submerged to verify anchorage is adequate for vessel retention.

EQUIPMENT QUALIFICATION DATASHEET (EQD)

Screening / Evaluation Required? If yes per 24590-WTP-GPP-SREG-002, E&NS signature required below	X	Yes		No

Approval

Rev	Description	System Engineer	Vessel Engineer	Checked	Reviewed/ MET	E&NS	Approved	Date
0	Issued for Purchase	R Rao	S.L. Lee	M Wright/ C Slater	N/A	N/A	M Hoffmann	09/03/03
1	Added black cell requirement	M Grindel	M Bala	C Slater/ M. Wright	N/A	N/A	C. Morley	02/05/04
2	Revised as Noted, Re-Issued for Purchase	M Grindel	S.L. Lee	T Galioto/ S Atri/ C Slater	N/A	N/A	M Hoffmann	06/03/04
3	Revised as Noted & added notes 9 - 13	T Galioto	S.L. Lee	D Adler/ C Slater	S Cross / E Isern	N/A	M Hoffmann	09/23/04
4	Revised to delete note 9	T Galioto	S.L. Lee	C Slater	S Cross / E Isern	N/A	M Hoffmann	11/18/04
5	Revised as Noted & added note 14	S Cross	S.L. Lee	C Slater / R Peters	E Isern / D Adler	N/A	M Hoffmann	04/18/05
6	Revised per Note 15 on sheet 2	R Peters	S.L. Lee	R Peters P Polani	D Adler / C Slater	N/A	J Julyk	10/28/05
7	Revised per Note 19 on sheet 2	R Gibbs	R Peters	M. Seed	C Figley	C Meng	J Julyk	08/13/08
8	Incorporated 24590-QL-MRG-MVA0-00002-T0001. Revised per Note 20 on page 2, and as noted by revision triangles.	R Gibbs	R Peters	W Wilcox	D Adler	C Meng	J Julyk	10/4/10
9	Revised Materials of Construction for vessel internals and piping	John Bennett R. PETERS FOR JOHN	R Peters RAP PETERS	B Dunlap	D Adler	C Meng	J Julyk	1/14/11

BENNETT PER EDR 24590-HLW-EDR-MS-10-0053 REV.0

INCORPORATES 24590-HLW-MVN-RLD-00029 RP 1/14/11

ATTACHMENT 1: Page 1 of 3
REFERENCES for Datasheet: 24590-HLW-MVD-RLD-00005, Rev 9
Vessel Tag: RLD-VSL-00007

Data	Document #	Rev	Document Title	Comments
Quality Level	24590-HLW-M6-RLD-00001	3	P&ID HLW - Radioactive Liquid Waste Disposal System Active Effluent Collection	See Note 12 on P&ID
Seismic Category	24590-HLW-M6-RLD-00001	3	P&ID HLW - Radioactive Liquid Waste Disposal System Active Effluent Collection	See Note 12 on P&ID
Design Specific Gravity	24590-HLW-MVC-11-00002	0	Process Information for Vessels, HOP-VSL-00903, HOP-VSL-00904 and RLD-VSL-00007	0.995 SG. See Input 18 of Calc. 24590-HLW-MVC-11-00002 Rev. 0.
Min./Max. Specific Gravity	24590-HLW-MVC-11-00002	0	Process Information for Vessels, HOP-VSL-00903, HOP-VSL-00904 and RLD-VSL-00007	0.994/0.995 SG. See Input 18 of Calc. 24590-HLW-MVC-11-00002 Rev. 0.
Max Operating Volume	24590-HLW-M6C-RLD-00002	C	HLW Acidic Waste Vessel RLD-VSL-00007 Sizing Calculation	Section 8
Total Volume	24590-HLW-M6C-RLD-00002	C	HLW Acidic Waste Vessel RLD-VSL-00007 Sizing Calculation	Section 8
Inside Diameter	24590-HLW-M6C-RLD-00002	C	HLW Acidic Waste Vessel RLD-VSL-00007 Sizing Calculation	Section 8
Length TL-TL	24590-HLW-M6C-RLD-00002	C	HLW Acidic Waste Vessel RLD-VSL-00007 Sizing Calculation	Section 8
Case 1: Operating Pressure (Min.)	24590-HLW-MVC-11-00002	0	Process Information for Vessels, HOP-VSL-00903, HOP-VSL-00904 and RLD-VSL-00007	-167 in WG (-6 psig). See Assumption 86 of Calc. 24590-HLW-MVC-30-00001 Rev. B. Values used in datasheet are bounding from Case 1 and Case 2 per 24590-HLW-MVC-30-00001, Appendix A, Sheet A-8.
Case 2: Operating Pressure (Min./Max.)	24590-HLW-MVC-11-00002	0	Process Information for Vessels, HOP-VSL-00903, HOP-VSL-00904 and RLD-VSL-00007	-23 in WG/-5 in WG (-0.83 psig/-0.18 psig). See Input 4 of Calc. 24590-HLW-MVC-11-00002 Rev. 0. Values used in datasheet are bounding from Case 1 and Case 2 per 24590-HLW-MVC-30-00001, Appendix A, Sheet A-8.
Operating Pressure (external)	24590-HLW-MVC-11-00002	0	Process Information for Vessels, HOP-VSL-00903, HOP-VSL-00904 and RLD-VSL-00007	-0.83 psig. See Input 14 of Calc. 24590-HLW-MVC-11-00002 Rev. 0.
Operating Pressure (internal)	24590-HLW-MVC-11-00002	0	Process Information for Vessels, HOP-VSL-00903, HOP-VSL-00904 and RLD-VSL-00007	0.0 in WG
Design Pressure (internal)	24590-WTP-DB-ENG-01-001	1P	Basis of Design	15 psig value is provided in Section 16
Design Pressure (external)	24590-WTP-GPG-M-050	2	Pressure Vessel and Heat Exchanger Design Guide	FV if appropriate
Jacket Design Pressure (internal)	N/A			N/A
Operating Temp (Min./Max.)	24590-HLW-MVC-11-00002	0	Process Information for Vessels, HOP-VSL-00903, HOP-VSL-00904 and RLD-VSL-00007	59 F/149 F 195°F value is conservative and used to provide design margin on 149°F maximum operating value found in Reference 24590-HLW-MVC-11-00002 (per 24590-HLW-MVE-11-00005).
Design Temp	24590-WTP-GPG-M-050	2	Pressure Vessel and Heat Exchanger Design	Design Guide states adding 25F to max operating.

Data	Document #	Rev	Document Title	Comments
			Guide	220 F is used to account for any future changes and is conservative.
Jacket Design Temp	N/A			N/A
Corrosion Allowance	24590-HLW-N1D-RLD-00001	6	RLD-VSL-00007 (HLW) Acidic Waste Vessel, Corrosion Evaluation	
Materials of Construction	24590- HLW-N1D-RLD-00001 24590-HLW-MV-RLD-00003	6 1	RLD-VSL-00007 (HLW) Acidic Waste Vessel, Corrosion Evaluation Equipment Assembly Acidic Waste Vessel RLD-VSL-00007	
Design Pressure (PJM) - Min./Max.	24590-HLW-MVC-30-00001	B	HLW Vessel Cyclic Datasheet Inputs	FV/135 psig. Worst case air loading to PJMs if plugged
Operating Pressure (PJM) - Min./Max.	24590-HLW-MVC-30-00001	B	HLW Vessel Cyclic Datasheet Inputs	FV/14 psig.
Operating Temperature (PJM) - Min./Max.	24590-HLW-MVC-11-00002	0	Process Information for Vessels, HOP-VSL-00903, HOP-VSL-00904 and RLD-VSL-00007	Same value as the parent vessel
Specific Gravity (PJM)	24590-HLW-MVC-11-00002	0	Process Information for Vessels, HOP-VSL-00903, HOP-VSL-00904 and RLD-VSL-00007	Same as parent vessel.
Design Pressure (Charge Vessels) - Min./Max.	24590-HLW-MVC-30-00001	B	HLW Vessel Cyclic Datasheet Inputs	FV/135 psig. worst case air loading to charge vessels if RFD plugged
Operating Pressure (Charge Vessels) - Min./Max.	24590-HLW-MVC-30-00001	B	HLW Vessel Cyclic Datasheet Inputs	FV/60 psig.
Operating Temperature (Charge Vessels) - Min./Max.	24590-HLW-MVC-11-00002	0	Process Information for Vessels, HOP-VSL-00903, HOP-VSL-00904 and RLD-VSL-00007	Same values as parent vessel.
Specific Gravity (Charge Vessels)	24590-HLW-MVC-11-00002	0	Process Information for Vessels, HOP-VSL-00903, HOP-VSL-00904 and RLD-VSL-00007	Same as parent vessel.
Steam Ejector Mass Flow Rate	24590-HLW-M6C-RLD-00008	D	RLD Steam Ejector Sizing Calculation	
Cyclic Data (Vessel)	24590-HLW-MVC-30-00001	B	HLW Vessel Cyclic Datasheet Inputs	
Cyclic Data (PJM)	24590-HLW-MVC-30-00001	B	HLW Vessel Cyclic Datasheet Inputs	
Cyclic Data (Charge Vessels)	24590-HLW-MVC-30-00001	B	HLW Vessel Cyclic Datasheet Inputs	
Hydrodynamic Loads	24590-WTP-MVC-50-00001	A	Hydrodynamic Loads for Normal PJM Operation in Vessels with Newtonian Fluids	Section 8.2.1, Table 8 for 4 PJM class vessels
Single PJM Overblow Loads	24590-WTP-MVC-50-00001	A	Hydrodynamic Loads for Normal PJM Operation in Vessels with Newtonian Fluids	
Single Overblow Cycles	24590-HLW-MVC-30-00001	B	HLW Vessel Cyclic Datasheet Inputs	1000 cycles for single PJM Overblow, see 24590-HLW-MVE-30-00002
Multiple Overblow	24590-HLW-MVC-30-00001	B	HLW Vessel Cyclic Datasheet Inputs	24590-HLW-MVE-30-00001 (24590-HLW-MVE-30-00002)
Multiple Overblow Cycles	24590-HLW-MVC-30-00001	B	HLW Vessel Cyclic Datasheet Inputs	24590-HLW-MVE-30-00001 (24590-HLW-MVE-30-00002)

ATTACHMENT 1: Page 3 of 3
REFERENCES for Datasheet: 24590-HLW-MVD-RLD-00005, Rev 9
Vessel Tag: RLD-VSL-00007

Data	Document #	Rev	Document Title	Comments
Nozzle Loads	24590-WTP-3PS-MV00-T0001 177071	3 N/A	Pressure Vessel Design Specification Supplement Nozzle Design Loads for RLD-VSL-00007 & 00008 (Supersedes CCN 166594)	
Nozzle Design Pressure and Temperature	24590-HLW-M6X-RLD-00003 24590-HLW-M6X-RLD-00016	3 4	Line List for 24590-HLW-M6-RLD-00001, Rev 3 Line List for 24590-HLW-M6-RLD-00006, Rev 4	N19 (24590-HLW-M6N-RLD-00227). N40A, N40B, N40C, N42A, N42B, and N42C (24590-HLW-M6N-30-00026).
Connecting Pipe Size	24590-HLW-M6X-RLD-00003 24590-HLW-M6X-RLD-00016	3 4	Line List for 24590-HLW-M6-RLD-00001, Rev 3 Line List for 24590-HLW-M6-RLD-00006, Rev 4	N19 (24590-HLW-M6N-RLD-00227). N40A, N40B, N40C, N42A, N42B, and N42C (24590-HLW-M6N-30-00026).
Connecting Pipe Material Class	24590-WTP-3PB-P000-TN11E 24590-WTP-3PB-P000-TN11K 24590-WTP-3PB-P000-TS11B 24590-WTP-3PB-P000-TS11F 24590-WTP-3PB-P000-TS11P 24590-WTP-3PB-P000-TS11Y 24590-WTP-3PB-P000-TS14E	10 2 31 11 18 13 6	Piping Material classification Pipe Class N11E Piping Material classification Pipe Class N11K Piping Material classification Pipe Class S11B Piping Material classification Pipe Class S11F Piping Material classification Pipe Class S11P Piping Material classification Pipe Class S11Y Piping Material classification Pipe Class S14E	

11-ESQ-164

Drawings:

24590-HLW-MV-RLD-00025001	REV 0
24590-HLW-MV-RLD-00025002	REV 0
24590-HLW-MV-RLD-00025003	REV 0
24590-HLW-MV-RLD-00025004	REV 0
24590-HLW-MV-RLD-00004	REV 1
24590-HLW-MV-RLD-00019	REV 0
24590-HLW-MV-RLD-00020	REV 0
24590-HLW-MV-RLD-00021	REV 0
24590-HLW-MV-RLD-00022	REV 0
24590-HLW-MV-RLD-00024	REV 0

have been scanned as separate attachment(s) due to size and printing capabilities.

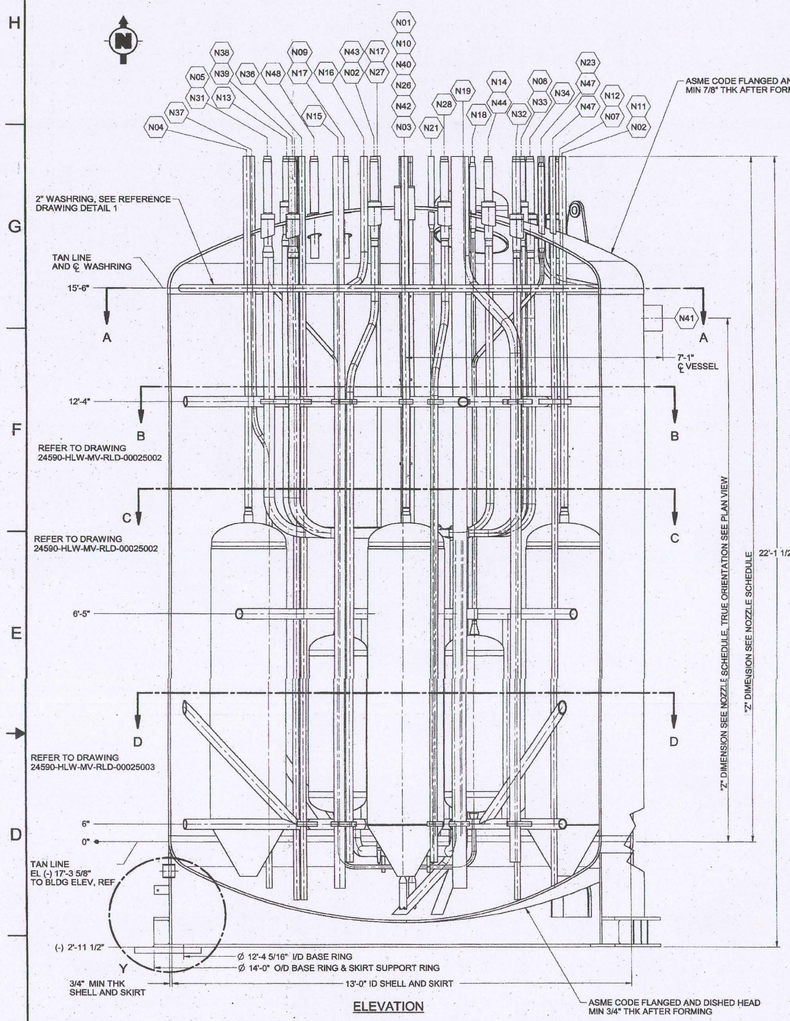

ELEVATION

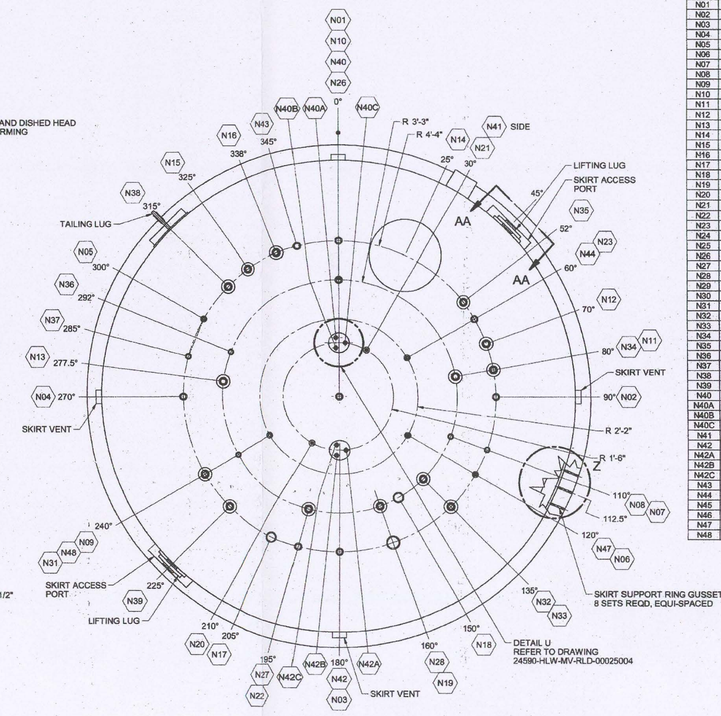

PLAN

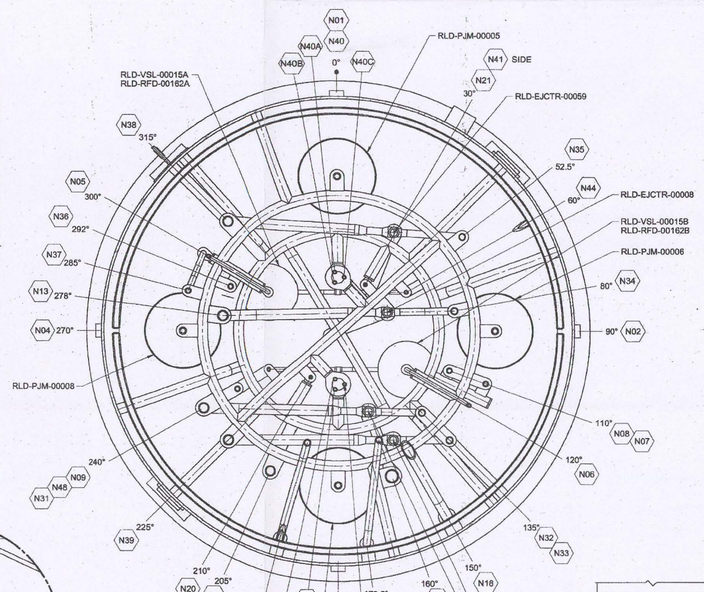

SECTION A-A

DRAWING INDEX	
DWG NO	TITLE
24590-HLW-MV-RLD-00025001	EQUIPMENT ASSEMBLY ACIDIC WASTE VESSEL RLD-VSL-00007
24590-HLW-MV-RLD-00025002	EQUIPMENT ASSEMBLY ACIDIC WASTE VESSEL RLD-VSL-00007 SECTIONS AND DETAILS
24590-HLW-MV-RLD-00025003	EQUIPMENT ASSEMBLY ACIDIC WASTE VESSEL RLD-VSL-00007 SECTIONS AND DETAILS
24590-HLW-MV-RLD-00025004	EQUIPMENT ASSEMBLY ACIDIC WASTE VESSEL RLD-VSL-00007 SECTIONS AND DETAILS

REFERENCE DRAWINGS	
DWG NO	TITLE
24590-HLW-M6-RLD-00001	P & ID
24590-HLW-M6-RLD-00006	P & ID
24590-WTP-MV-M59T-00001	PRESSURE VESSEL TOLERANCES STANDARD DETAILS
24590-WTP-MV-M59T-00004	PULSE JET MIXERS STANDARD DETAILS
24590-WTP-MV-M59T-00007	THERMOWELL CONNECTION STANDARD DETAILS
24590-WTP-MV-M59T-00009	LIFTING LUG STANDARD DETAILS
24590-WTP-MV-M59T-00011	WASH RINGS STANDARD DETAILS
24590-WTP-MV-M59T-00012	GROUNDING LUG STANDARD DETAILS
24590-WTP-MV-M59T-00013	CHARGE VESSEL STANDARD DETAILS
24590-WTP-MV-M59T-00014	RFD PUMPS DETAIL
24590-WTP-MV-M59T-00016001	VESSEL CONNECTIONS STANDARD DETAILS SHT 1 OF 3
24590-WTP-MV-M59T-00017	VESSEL INSPECTION MANWAY STANDARD DETAILS
24590-WTP-MV-M59T-00018	VESSEL NAME PLATE STANDARD DETAILS
24590-HLW-DD-S13T-00002007	HLW VITRIFICATION BLDG CONCRETE EQUIP SUPPORT DET EL (-) 21'-0"
24590-WTP-PW-P30T-00001	WTP END PREP DETAIL FOR FIELD BUTT WELDS
24590-QL-POA-MVA0-00012-03-00006	PJM & CV SUPPORT CONFIGURATION
	ACIDIC WASTE VESSEL

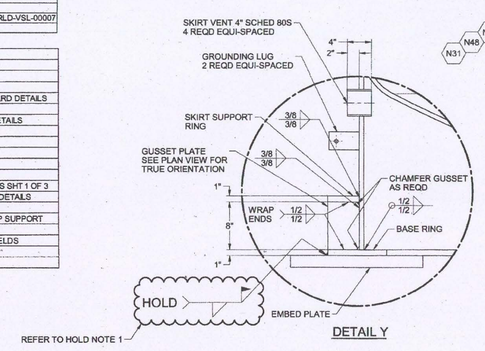

DETAIL Y

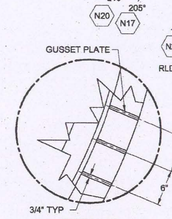

DETAIL Z

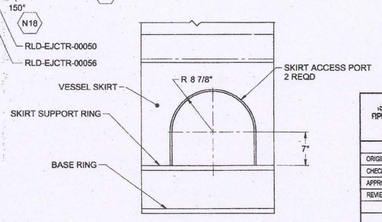

VIEW AA-AA

NOZZLE	SIZE	SCHED/WALL	SERVICE/REMARKS	"Z" DIM	REF DWG/DET	CONN PIPE SIZE/SCHED
N01	2"	160S	AIR/VAC TO RLD-PJM-00005	19'-2"	24590-WTP-MV-M59T-00016001 DET 3	2"-40S
N02	2"	160S	AIR/VAC TO RLD-PJM-00006	19'-2"	24590-WTP-MV-M59T-00016001 DET 3	2"-40S
N03	2"	160S	AIR/VAC TO RLD-PJM-00007	19'-2"	24590-WTP-MV-M59T-00016001 DET 3	2"-40S
N04	2"	160S	AIR/VAC TO RLD-PJM-00008	19'-2"	24590-WTP-MV-M59T-00016001 DET 3	2"-40S
N05	2"OD X 1"	SEE DETAIL	AIR/VAC TO RLD-VSL-00015A	19'-2"	24590-WTP-MV-M59T-00016001 DET 7	1"-40S
N06	2"OD X 1"	SEE DETAIL	AIR/VAC TO RLD-VSL-00015B	19'-2"	24590-WTP-MV-M59T-00016001 DET 7	1"-40S
N07	1 1/2"	160S	INLET FROM HOP-EJCTR-00053A	19'-2"	24590-WTP-MV-M59T-00016001 DET 4	1 1/2"-40S
N08	1 1/2"	160S	INLET FROM HOP-EJCTR-00053B	19'-2"	24590-WTP-MV-M59T-00016001 DET 4	1 1/2"-40S
N09	2"OD X 1"	SEE DETAIL	OUTLET FROM RLD-RFD-00162B	19'-2"	24590-WTP-MV-M59T-00016001 DET 7	1"-40S
N10	2"	160S	AUTOSAMPLER RETURN	19'-2"	24590-WTP-MV-M59T-00016001 DET 2	2"-40S
N11	2"	160S	OUTLET FROM HOP-EJCTR-9A	19'-2"	24590-HLW-MV-RLD-00025004 DET T	2"-40S
N12	2"	160S	OUTLET FROM HOP-EJCTR-9B	19'-2"	24590-HLW-MV-RLD-00025004 DET T	2"-40S
N13	3"	80S	OUTLET FROM RLD-EJCTR-00008	19'-2"	24590-HLW-MV-RLD-00025004 DET T	2"-40S
N14	24"	PLATE	MANWAY	17'-8"	24590-WTP-MV-M59T-00017 DET 1	CAPPED
N15	2"	160S	OUTLET FROM HOP-EJCTR-00929A	19'-2"	24590-HLW-MV-RLD-00025004 DET T	2"-40S
N16	2"	160S	OUTLET FROM HOP-EJCTR-00929B	19'-2"	24590-HLW-MV-RLD-00025004 DET T	2"-40S
N17	3"	80S	OVERFLOW FROM RLD-BRKPT-00007	19'-2"	24590-WTP-MV-M59T-00016001 DET 4	3"-40S
N18	3"	80S	OVERFLOW FROM RLD-BRKPT-00009	19'-2"	24590-WTP-MV-M59T-00016001 DET 4	3"-40S
N19	4"	80S	OVERFLOW FROM HEADER	19'-2"	24590-WTP-MV-M59T-00016001 DET 4	4"-40S
N20	2"OD X 1"	SEE DETAIL	TEMPERATURE	19'-2"	24590-WTP-MV-M59T-00007 ASSY 1, DET 5	1"-10S
N21	2"OD X 1"	SEE DETAIL	TEMPERATURE (SPARE)	19'-2"	24590-WTP-MV-M59T-00007 ASSY 1, DET 5	1"-10S
N22	2"	160S	INLET TO WASH RING	19'-2"	24590-WTP-MV-M59T-00016001 DET 3	2"-40S
N23	2"	160S	INLET TO WASH RING	19'-2"	24590-WTP-MV-M59T-00016001 DET 3	2"-40S
N24			NOT USED			
N25			NOT USED			
N26	2"	160S	VENT	19'-2"	24590-WTP-MV-M59T-00016001 DET 1	2"-40S
N27	2"	160S	INLET FROM HDH-EJCTR-00002B	19'-2"	24590-HLW-MV-RLD-00025004 DET T	2"-40S
N28	2"	160S	INLET FROM HDH-EJCTR-00002A	19'-2"	24590-HLW-MV-RLD-00025004 DET T	2"-40S
N29			NOT USED			
N30			NOT USED			
N31	3"	SEE DETAIL	OUTLET FROM RLD-EJCTR-00056	19'-2"	24590-HLW-MV-RLD-00025004 DET T	2"-40S
N32	2"	SEE DETAIL	STEAM TO RLD-EJCTR-00056	19'-2"	24590-HLW-MV-RLD-00025004 DET T	2"-40S
N33	2"	SEE DETAIL	STEAM TO RLD-EJCTR-00050	19'-2"	24590-HLW-MV-RLD-00025004 DET T	2"-40S
N34	2"	SEE DETAIL	STEAM TO RLD-EJCTR-00008	19'-2"	24590-HLW-MV-RLD-00025004 DET T	2"-40S
N35	2"	160S	STEAM TO RLD-EJCTR-00059	19'-2"	24590-HLW-MV-RLD-00025004 DET T	2"-40S
N36	1 1/2"	160S	OUTLET FROM HOP-EJCTR-00918A	19'-2"	24590-WTP-MV-M59T-00016001 DET 4	1 1/2"-40S
N37	1 1/2"	160S	OUTLET FROM HOP-EJCTR-00918B	19'-2"	24590-WTP-MV-M59T-00016001 DET 4	1 1/2"-40S
N38	3"	80S	OUTLET FROM RLD-EJCTR-00059	19'-2"	24590-HLW-MV-RLD-00025004 DET T	2"-40S
N39	3"	80S	OUTLET FROM RLD-EJCTR-00050	19'-2"	24590-HLW-MV-RLD-00025004 DET T	2"-40S
N40	6"	40S	INSTRUMENTATION	18'-2"	24590-HLW-MV-RLD-00025004	N/A
N40A	1"	160S	BALANCE	19'-0"	24590-HLW-MV-RLD-00025004	1"-40S
N40B	1"	160S	DENSITY	19'-1"	24590-HLW-MV-RLD-00025004	1"-40S
N40C	1"	160S	LEVEL	19'-2"	24590-HLW-MV-RLD-00025004	1"-40S
N41	8"	80S	CV/ERFLOW	14'-8"	24590-WTP-MV-M59T-00016001 DET 1	8"-10S
N42	6"	40S	INSTRUMENTATION	18'-2"	24590-HLW-MV-RLD-00025004	N/A
N42A	1"	160S	BALANCE	19'-0"	24590-HLW-MV-RLD-00025004	1"-40S
N42B	1"	160S	DENSITY	19'-1"	24590-HLW-MV-RLD-00025004	1"-40S
N42C	1"	160S	LEVEL	19'-2"	24590-HLW-MV-RLD-00025004	1"-40S
N43	2"	160S	AUTO SAMPLE RETURN	19'-2"	24590-WTP-MV-M59T-00016001 DET 2	2"-40S
N44	2"OD X 1"	SEE DETAIL	OUTLET FROM RLD-RFD-00162A	19'-2"	24590-WTP-MV-M59T-00016001 DET 7	1"-40S
N45			NOT USED			
N46			NOT USED			
N47	2"OD X 1/2"	SEE DETAIL	PRESSURE	19'-2"	24590-WTP-MV-M59T-00016001 DET 5	1/2"-40S
N48	1 1/2"	SEE DETAIL	INLET FROM RLD-EJCTR-00049A	19'-2"	24590-HLW-MV-RLD-00025004 DET T	1 1/2"-40S

GENERAL AND FLAG NOTES:

1. ALL 'Z' DIMENSIONS MEASURED FROM BOTTOM TANGENT LINE UNLESS OTHERWISE NOTED. FOR SHELL NOZZLE 'Z' DIMENSIONS MEASURED TO CENTER LINE OF NOZZLE FACE.
2. SELLER SHALL PROVIDE 8 SHIM PACKS COMPRISING OF THE FOLLOWING 10" SQUARE STAINLESS STEEL PLATES:
   - 2 PCS-1/4" THICK PLATES
   - 1 PCS-1/8" THICK PLATES
   - 2 PCS-1/16" THICK PLATES
3. FOR BASE SUPPORT, SEE REFERENCE DRAWING 24590-HLW-DD-S13T-00002007.
4. FOR TEMPERATURE NOZZLE (N20 & N21), THE DISTANCE OF THE DIP PIPE (LEGS) USE 1'-6" CLEARANCE.
5. CONTENTS OF THIS DOCUMENT ARE DANGEROUS WASTE PERMIT AFFECTING.
6. HOLE BORES SHALL MAINTAIN 1/16" DIAMETRICAL CLEARANCE AROUND THE NOMINAL SIZE OF PIPE BEING SUPPORTED.
7. PROVIDE MIN 1/8" CHAMFER TO HOLE BORE EDGES FOR ALL THRU-HOLES SUPPORTING PROCESS PIPES.
8. PIPE TEES OR WYES MAY BE USED FOR LATERAL AND VERTICAL PIPE TO RING CONNECTIONS, AND FOR RADIAL KNEE BRACES IN LIEU OF MITERED JOINTS.
9. THIS DRAWING SUPERSEDES 24590-HLW-MV-RLD-00003, REV 2.
10. TAILING LUG BY SELLER.
11. REFER TO DRAWING 24590-QL-POA-MVA0-00012-03-00006 REV.00B FOR PJM & CHARGE VESSEL SUPPORT CONFIGURATION.
12. PROVIDE A 3/8" DIAMETER ANTI-SIPHON HOLE, 8" ABOVE THE OVERFLOW LINE FOR NOZZLE N48.
13. WELD SIZES DEPICTED ARE MINIMUM UNLESS OTHERWISE NOTED.

HOLD NOTES:

1. WELD SIZE ON HOLD PENDING ISSUANCE OF ECCN.

THIS DRAWING TO BE READ IN CONJUNCTION WITH THE MECHANICAL DATA SHEET NO 24590-HLW-MVD-RLD-00005

Please note that source, special nuclear, and byproduct materials, as defined in the Atomic Energy Act of 1954 (AEA) are regulated at the U. S. Department of Energy (DOE) facilities exclusively by DOE acting pursuant to its AEA authority. DOE asserts, that pursuant to AEA, it has sole and exclusive responsibility and authority to regulate source, special nuclear, and byproduct materials at DOE-owned nuclear facilities. Information contained herein on radionuclides is provided for process description purposes only.

PLEASE NOTE THAT SOURCE, SPECIAL NUCLEAR AND BYPRODUCT MATERIALS, AS DEFINED IN THE ATOMIC ENERGY ACT OF 1954 (AEA), ARE REGULATED AT THE U.S. DEPARTMENT OF ENERGY (DOE) FACILITIES EXCLUSIVELY BY DOE ACTING PURSUANT TO ITS AEA AUTHORITY. DOE ASSERTS, THAT PURSUANT TO THE AEA, IT HAS SOLE AND EXCLUSIVE RESPONSIBILITY AND AUTHORITY TO REGULATE SOURCE, SPECIAL NUCLEAR, AND BYPRODUCT MATERIALS AT DOE-OWNED NUCLEAR FACILITIES. INFORMATION CONTAINED HERE IN ON RADIONUCLIDES IS PROVIDED FOR PROCESS DESCRIPTION PURPOSES ONLY.

REV	DESCRIPTION	ORG	CHKD	RVWD	APVD	DATE
0	ISSUED FOR PURCHASE, SEE NOTE 9	RPP				11/5/10

REVISION HISTORY

ISSUED BY RPP-WTP PDC

PROJECT No.	24590	
SITE	HANFORD	
AREA	200E	
BUILDING No.	30	
	BY	DATE
ORIGINATOR	Roy Perges	11/5/10
CHECKER		5-Nov-10
APPROVER		11/5/10
REVIEWER		11/5/10

CONTENT APPLICABLE TO ALARA? [X] YES [ ] NO

ADR NO. 24590-WTP-ADR-M-03-008 REV: 2

EMS SCREENING REQUIRED [X] YES [ ] NO EMS INITIAL IF YES

SCREENING IS REQUIRED FOR DRAWING TYPES EXCEPT R1D IN 24590-WTP-GPP-SREQ-002

RIVER PROTECTION PROJECT
WASTE TREATMENT PLANT
2435 STEVENS CENTER PLACE
RICHLAND, WA 99354

CONTRACT No: DE-AC27-01RV14136

EQUIPMENT ASSEMBLY ACIDIC WASTE VESSEL RLD-VSL-00007

SCALE: NONE

24590-HLW-MV-RLD-00025001

REV 0

R11297460

COMPUTER GENERATED - MANUAL DESIGN CHANGES NOT PERMITTED

FORM E_MASTER 03/2003

24590-HLW-MV-RLD-00025002

BILL OF MATERIALS			
ITEM	THICK/SIZE	DESCRIPTION	QTY
1	3" SCHED 80S	STRUCTURAL SUPPORT	A/R
2	2" SCHED 80S	STRUCTURAL SUPPORT	A/R
3	1" THK PLATE	PIPE SUPPORT	A/R
4	1 1/2" THK PLATE	PIPE SUPPORT	A/R
5	1/2" THK PLATE	END CAP	A/R

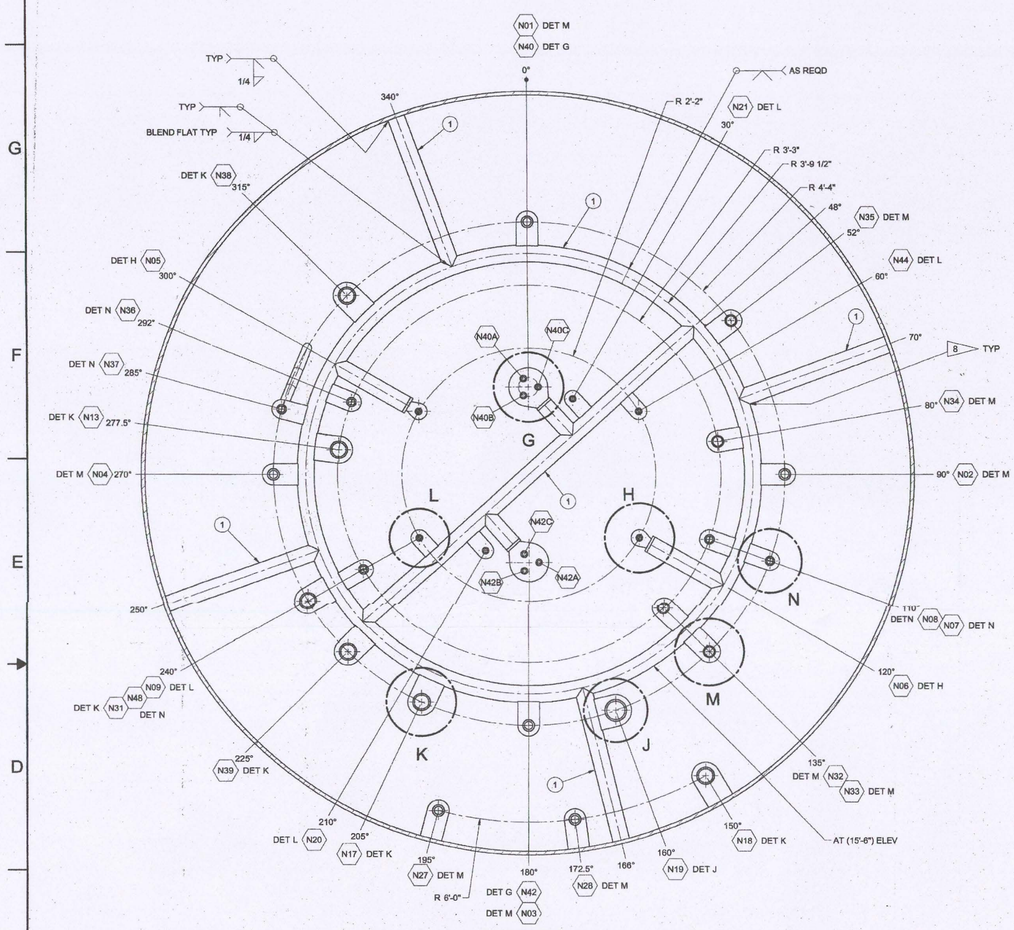

SECTION B-B
FROM 24590-HLW-MV-RLD-00025001

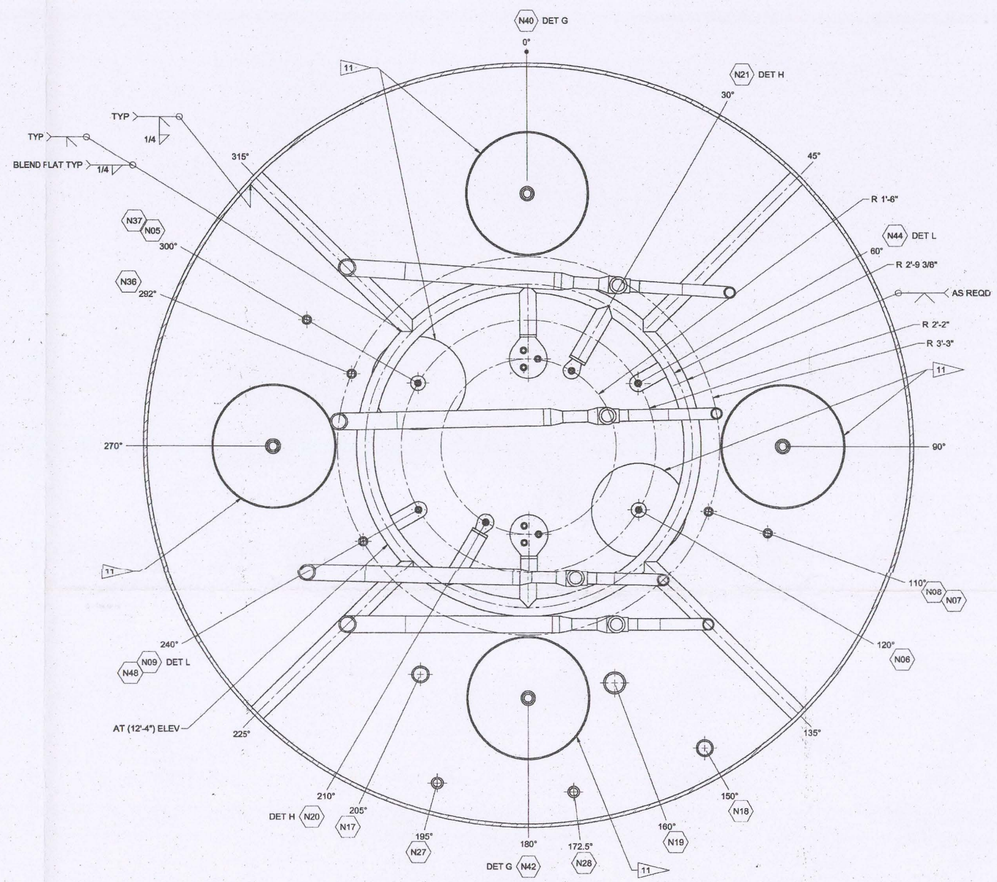

SECTION C-C
FROM 24590-HLW-MV-RLD-00025001

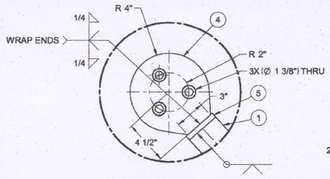

DETAIL G

NOTE: TYP FOR INSTRUMENT SUPPORTS, ADJUST HOLE ORIENTATIONS AS INDICATED AT OTHER LOCATIONS

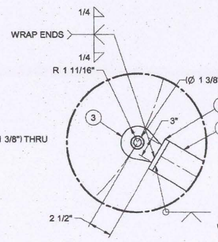

DETAIL H

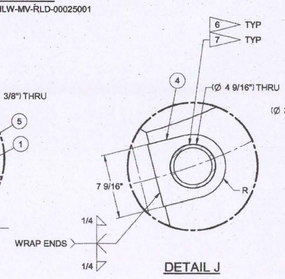

DETAIL J

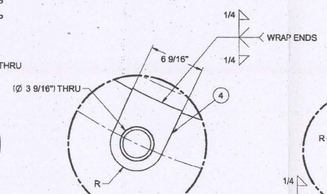

DETAIL K

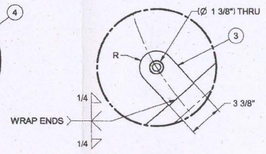

DETAIL L

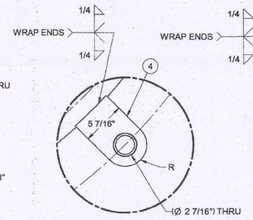

DETAIL M

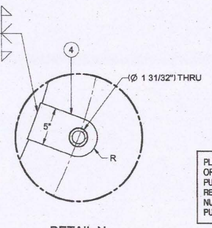

DETAIL N

DRAWING INDEX	
DWG NO	TITLE
24590-HLW-MV-RLD-00025001	EQUIPMENT ASSEMBLY ACIDIC WASTE VESSEL RLD-VSL-00007
24590-HLW-MV-RLD-00025002	EQUIPMENT ASSEMBLY ACIDIC WASTE VESSEL RLD-VSL-00007 SECTIONS AND DETAILS
24590-HLW-MV-RLD-00025003	EQUIPMENT ASSEMBLY ACIDIC WASTE VESSEL RLD-VSL-00007 SECTIONS AND DETAILS
24590-HLW-MV-RLD-00025004	EQUIPMENT ASSEMBLY ACIDIC WASTE VESSEL RLD-VSL-00007 SECTIONS AND DETAILS

PLEASE NOTE THAT SOURCE, SPECIAL NUCLEAR AND BYPRODUCT MATERIALS, AS DEFINED IN THE ATOMIC ENERGY ACT OF 1954 (AEA), ARE REGULATED AT THE U.S. DEPARTMENT OF ENERGY (DOE) FACILITIES EXCLUSIVELY BY DOE ACTING PURSUANT TO ITS AEA AUTHORITY. DOE ASSERTS, THAT PURSUANT TO THE AEA, IT HAS SOLE AND EXCLUSIVE RESPONSIBILITY AND AUTHORITY TO REGULATE SOURCE, SPECIAL NUCLEAR, AND BYPRODUCT MATERIALS AT DOE-OWNED NUCLEAR FACILITIES. INFORMATION CONTAINED HERE IN ON RADIONUCLIDES IS PROVIDED FOR PROCESS DESCRIPTION PURPOSES ONLY.

Q

REVISION HISTORY						
		RP 11/5/10				
0	ISSUED FOR PURCHASE. ~~SEE NOTE 9~~	RP	RP	LAD	JP	11/5/10
REV	DESCRIPTION	ORG	CHKD	RVWD	APVD	DATE

ISSUED BY: RPP-WTP PDC	PROJECT No.	24590
	SITE	HANFORD
	AREA	200E
ISSUE STAMP	BUILDING No.	30

	BY	DATE
ORIGINATOR	RP Powers	11/5/10
CHECKER	RP	5-Nov-10
APPROVER		11/6/10
REVIEWER	LAD	11/5/10

CONTENT APPLICABLE TO ALARA? [X] YES [ ] NO
ADR NO: 24590-WTP-ADR-MA-03-008 REV: 2
EMS SCREENING REQUIRED [X] YES [ ] NO EMS INITIAL IF YES: RP

Please note that source, special nuclear, and byproduct materials, as defined in the Atomic Energy Act of 1954 (AEA) are regulated at the U. S. Department of Energy (DOE) facilities exclusively by DOE acting pursuant to its AEA authority. DOE asserts that pursuant to AEA, it has sole and exclusive responsibility and authority to regulate source, special nuclear, and byproduct materials at DOE-owned nuclear facilities. Information contained herein on radionuclides is provided for process description purposes only.

RIVER PROTECTION PROJECT
WASTE TREATMENT PLANT
2435 STEVENS CENTER PLACE
RICHLAND, WA 99354

CONTRACT No: DE-AC27-01RV14136

EQUIPMENT ASSEMBLY ACIDIC WASTE VESSEL RLD-VSL-00007 SECTIONS AND DETAILS

SCALE: NONE

24590-HLW-MV-RLD-00025002

REV 0

SCREENING IS REQUIRED FOR DRAWING TYPES IDENTIFIED IN 24590-WTP-CPP-SEC-002

'E' SIZE - 44x34

COMPUTER GENERATED - MANUAL DESIGN CHANGES NOT PERMITTED

R11297461

FORM E_MASTER 03/2003

BILL OF MATERIALS			
ITEM	THICK/SIZE	DESCRIPTION	QTY
1	3" SCHED 80S	STRUCTURAL SUPPORT	A/R
2	2" SCHED 80S	STRUCTURAL SUPPORT	A/R
3	1" THK PLATE	PIPE SUPPORT	A/R
4	1 1/2" THK PLATE	PIPE SUPPORT	A/R
5	1/2" THK PLATE	END CAP	A/R
6	3" SCHED 80S	LONG RADIUS ELBOW, BUTT WELD	2

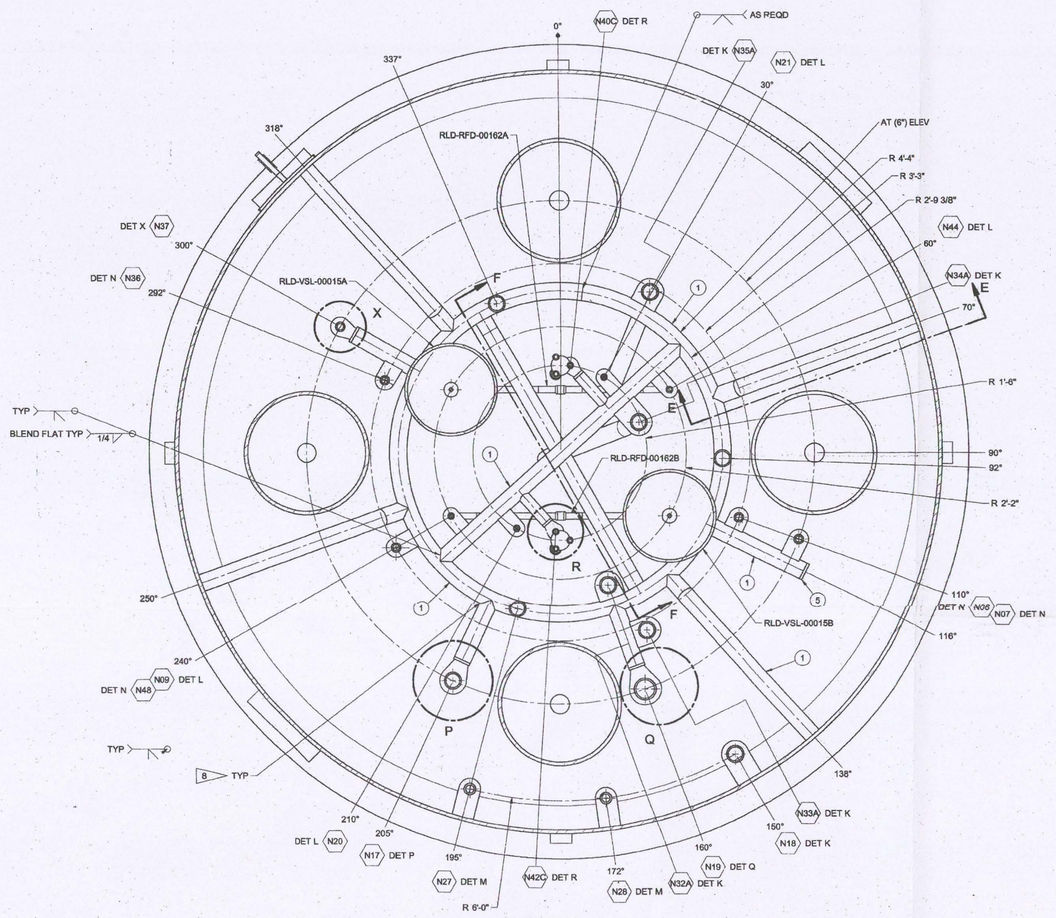

SECTION D-D

FROM 24590-HLW-MV-RLD-00025001

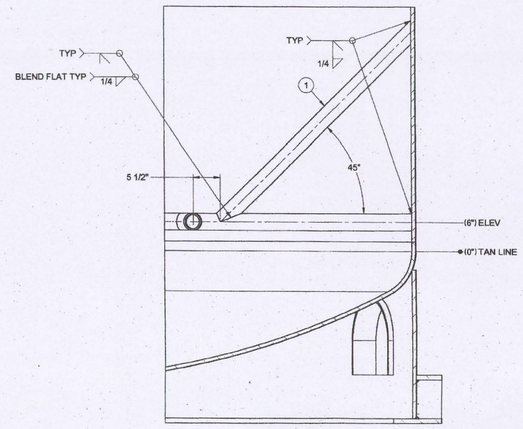

SECTION E-E

TYP 4 LOCATIONS 70°, 138°, 250° & 318°
SOME ITEMS OMITTED FOR CLARITY

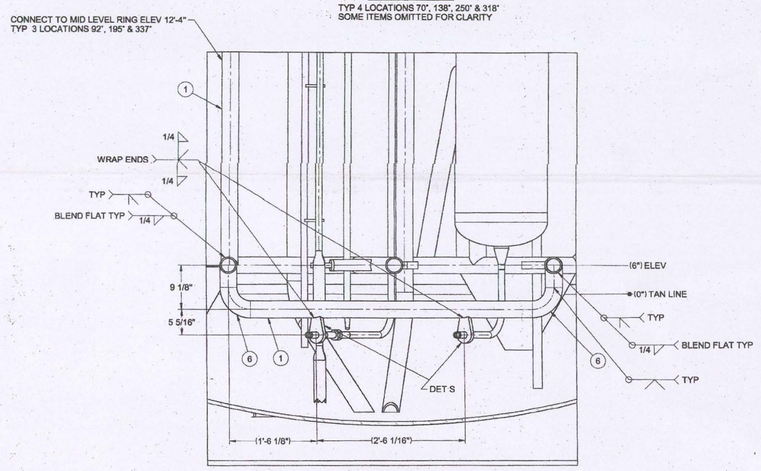

SECTION F-F

DRAWING INDEX	
DWG NO	TITLE
24590-HLW-MV-RLD-00025001	EQUIPMENT ASSEMBLY ACIDIC WASTE VESSEL RLD-VSL-00007
24590-HLW-MV-RLD-00025002	EQUIPMENT ASSEMBLY ACIDIC WASTE VESSEL RLD-VSL-00007 SECTIONS AND DETAILS
24590-HLW-MV-RLD-00025003	EQUIPMENT ASSEMBLY ACIDIC WASTE VESSEL RLD-VSL-00007 SECTIONS AND DETAILS
24590-HLW-MV-RLD-00025004	EQUIPMENT ASSEMBLY ACIDIC WASTE VESSEL RLD-VSL-00007 SECTIONS AND DETAILS

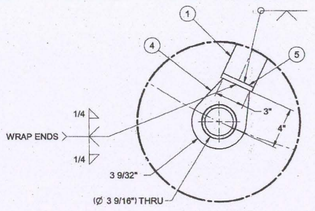

DETAIL P

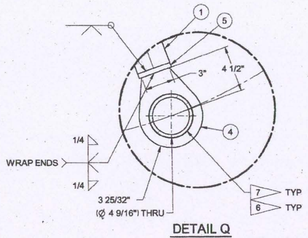

DETAIL Q

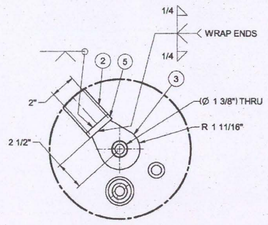

DETAIL R

INNER PIPE BRACE SUPPORT
NOT SHOWN FOR CLARITY

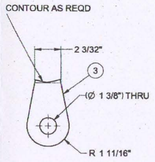

DETAIL S

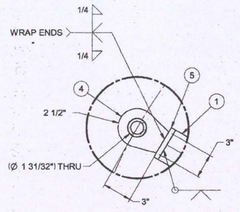

DETAIL X

PLEASE NOTE THAT SOURCE, SPECIAL NUCLEAR AND BYPRODUCT MATERIALS, AS DEFINED IN THE ATOMIC ENERGY ACT OF 1954 (AEA), ARE REGULATED AT THE U.S. DEPARTMENT OF ENERGY (DOE) FACILITIES EXCLUSIVELY BY DOE ACTING PURSUANT TO ITS AEA AUTHORITY. DOE ASSERTS, THAT PURSUANT TO THE AEA, IT HAS SOLE AND EXCLUSIVE RESPONSIBILITY AND AUTHORITY TO REGULATE SOURCE, SPECIAL NUCLEAR, AND BYPRODUCT MATERIALS AT DOE-OWNED NUCLEAR FACILITIES. INFORMATION CONTAINED HERE IN ON RADIONUCLIDES IS PROVIDED FOR PROCESS DESCRIPTION PURPOSES ONLY.

REV	DESCRIPTION	ORG	CHKD	RVWD	APVD	DATE
0	ISSUED FOR PURCHASE, ~~SEE NOTE 5~~ RP 11/5/10	RAP	RCP	WHP	RP	11/5/10

REVISION HISTORY

Q

ISSUED BY TFP-WTP PDC	PROJECT No.	24590
	SITE	HANFORD
	AREA	200E
ISSUE STAMP	BUILDING No.	30

	BY	DATE
ORIGINATOR	Rory Peters	11/5/10
CHECKER	[illegible]	5-Nov-10
APPROVER	[illegible]	11/5/10
REVIEWER	[illegible]	11/5/10

CONTENT APPLICABLE TO ALARA? [X] YES [ ] NO

ADR NO. 24590-WTP-ADR-M-03-008 REV. 2

EMIS SCREENING REQUIRED [X] YES [ ] NO EMIS INITIAL IF YES RLD

RIVER PROTECTION PROJECT
WASTE TREATMENT PLANT
2435 STEVENS CENTER PLACE
RICHLAND, WA 99354

CONTRACT No: DE-AC27-01RV14136

EQUIPMENT ASSEMBLY ACIDIC WASTE VESSEL RLD-VSL-00007 SECTIONS AND DETAILS

SCALE: NONE

24590-HLW-MV-RLD-00025003

REV 0

Please note that source, special nuclear, and byproduct materials, as defined in the Atomic Energy Act of 1954 (AEA) are regulated at the U.S. Department of Energy (DOE) facilities exclusively by DOE acting pursuant to its AEA authority. DOE asserts, that pursuant to AEA, it has sole and exclusive responsibility and authority to regulate source, special nuclear, and byproduct materials at DOE-owned nuclear facilities. Information contained herein on radionuclides is provided for process description purposes only.

SCREENING IS REQUIRED FOR DRAWING TYPES IDENTIFIED IN 24590-WTP-GPP-SRES-002

E SIZE - 44x34

COMPUTER GENERATED - MANUAL DESIGN CHANGES NOT PERMITTED

R1 1297462

FORM E_MASTER 03/2003

24590-HLW-MV-RLD-00025004

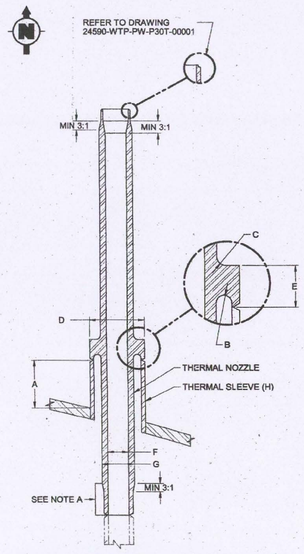

DETAIL T
FROM 24590-HLW-MV-RLD-00025001

THERMAL NOZZLE AND SLEEVE

DIMENSION		1 - 1/2"	2"	3"
A	SLEEVE	6" MINIMUM	6" MINIMUM	6" MINIMUM
B	NOZZLE	0.419" R	0.285" R	0.503" R
C	NOZZLE	0.375" R	0.375" R	0.375" R
D	NOZZLE	4.500"	4.500"	6.625"
E	NOZZLE	1.75"	1.75"	1.75"
F	NOZZLE	1.338"	1.687"	2.900"
G	NOZZLE	2.150"	2.687"	3.750"
H	SLEEVE	4" - 80S	4" - 80S	6" - 80S
EXTERNAL VESSEL PIPE CONNECTION		REFER TO NOZZLE SCHEDULE		
INTERNAL PIPE CONNECTION	1-1/2" - 40S	N48		
	2" - 160S		N11, N12, N15, N16, N27, N28, N32, N34, N33 & N35,	
	3" - 80S		N13, N31, N38, & N39 NOTE A	N10, N54

NOTE A: THE THERMAL NOZZLE IS MACHINED TO ACCOMODATE THE 3" TO 2" TRANSITION.

NOTE B: FOR UNDIPPED THERMAL NOZZLES N11, N12, N15 & N16 SEE TYPICAL UNDIPPED NOZZLE DETAIL.

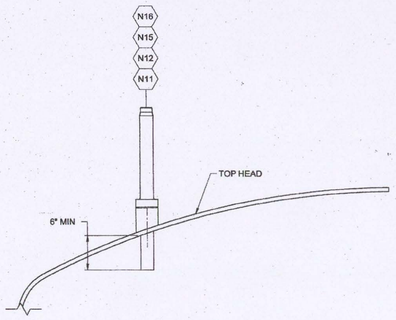

TYPICAL UNDIPPED NOZZLE DETAIL
N11, N12, N15 & N16

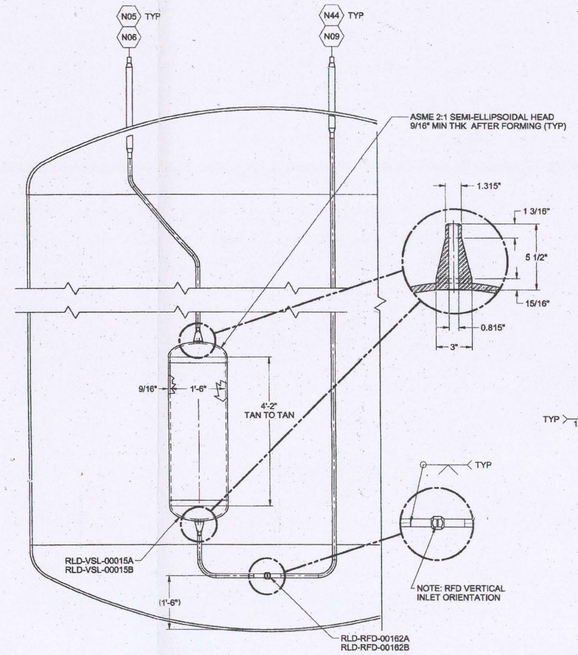

CHARGE VESSEL & RFD ASSEMBLY

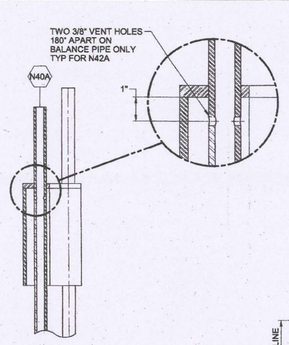

SECTION V-V

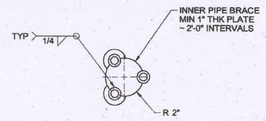

SECTION W-W

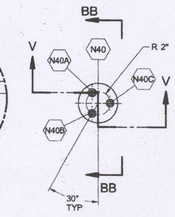

DETAIL U
FROM 24590-HLW-MV-RLD-00025001

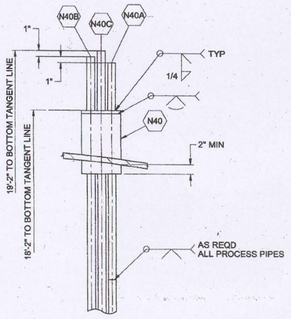

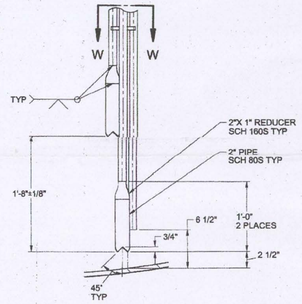

VIEW BB-BB
TYP FOR NOZZLE N42

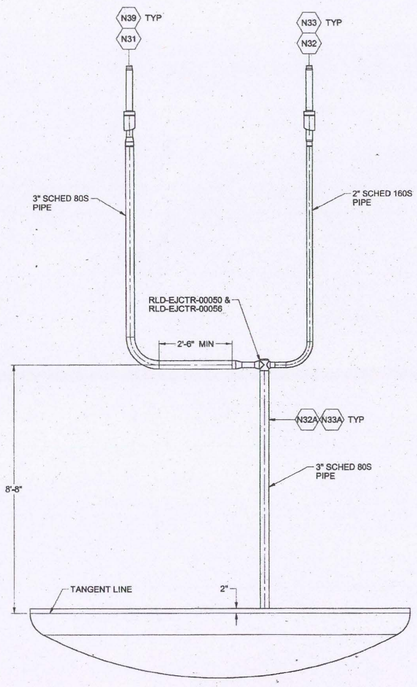

N33/N39 RLD-EJCTR-00050
N32/N31 RLD-EJCTR-00056

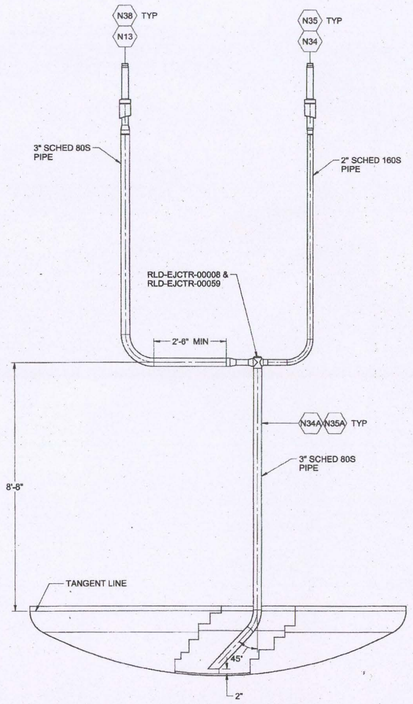

N34/N13 RLD-EJCTR-00008
N35/N38 RLD-EJCTR-00059

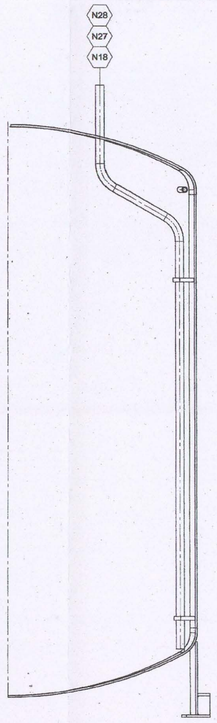

TYPICAL OFFSET NOZZLE DETAIL
N18, N27 & N28

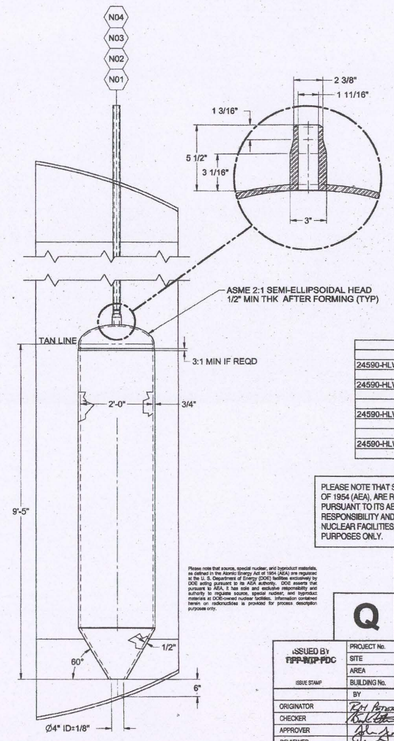

PULSE JET MIXER ASSEMBLY

DWG NO	TITLE
24590-HLW-MV-RLD-00025001	EQUIPMENT ASSEMBLY ACIDIC WASTE VESSEL RLD-VSL-00007
24590-HLW-MV-RLD-00025002	EQUIPMENT ASSEMBLY ACIDIC WASTE VESSEL RLD-VSL-00007 SECTIONS AND DETAILS
24590-HLW-MV-RLD-00025003	EQUIPMENT ASSEMBLY ACIDIC WASTE VESSEL RLD-VSL-00007 SECTIONS AND DETAILS
24590-HLW-MV-RLD-00025004	EQUIPMENT ASSEMBLY ACIDIC WASTE VESSEL RLD-VSL-00007 SECTIONS AND DETAILS

PLEASE NOTE THAT SOURCE, SPECIAL NUCLEAR AND BYPRODUCT MATERIALS, AS DEFINED IN THE ATOMIC ENERGY ACT OF 1954 (AEA), ARE REGULATED AT THE U.S. DEPARTMENT OF ENERGY (DOE) FACILITIES EXCLUSIVELY BY DOE ACTING PURSUANT TO ITS AEA AUTHORITY. DOE ASSERTS, THAT PURSUANT TO THE AEA, IT HAS SOLE AND EXCLUSIVE RESPONSIBILITY AND AUTHORITY TO REGULATE SOURCE, SPECIAL NUCLEAR, AND BYPRODUCT MATERIALS AT DOE-OWNED NUCLEAR FACILITIES. INFORMATION CONTAINED HERE IN ON RADIONUCLIDES IS PROVIDED FOR PROCESS DESCRIPTION PURPOSES ONLY.

Please note that source, special nuclear, and byproduct materials, as defined in the Atomic Energy Act of 1954 (AEA) are regulated at the U. S. Department of Energy (DOE) facilities exclusively by DOE acting pursuant to its AEA authority. DOE asserts, that pursuant to AEA, it has sole and exclusive responsibility and authority to regulate source, special nuclear, and byproduct materials at DOE-owned nuclear facilities. Information contained herein on radionuclides is provided for process description purposes only.

REV	DESCRIPTION	ORG	CHKD	RVWD	APVD	DATE
0	ISSUED FOR PURCHASE, ~~SEE NOTE 5~~ RP 11/5/10	RP	RTD	LLP		11/5/10

REVISION HISTORY

Q

ISSUED BY: RPP-WTP-PDC
ISSUE STAMP

PROJECT No.	24590	
SITE	HANFORD	
AREA	200E	
BUILDING No.	30	
	BY	DATE
ORIGINATOR	Rpt Parsons	11/5/10
CHECKER	[illegible]	5-Nov-10
APPROVER	[illegible]	11/5/10
REVIEWER	[illegible]	11/5/10

CONTENT APPLICABLE TO ALARA? [X] YES [ ] NO
ADR NO. 24590-WTP-ADR-M-03-008 REV: 2
EIMS SCREENING REQUIRED [X] YES [ ] NO EIMS INITIAL IF YES [illegible]
SCREENING IS REQUIRED FOR DRAWING TYPES IDENTIFIED IN 24590-WTP-QPP-SRES-002

RIVER PROTECTION PROJECT
WASTE TREATMENT PLANT
2435 STEVENS CENTER PLACE
RICHLAND, WA 99354

CONTRACT No: DE-AC27-01RV14136

EQUIPMENT ASSEMBLY
ACIDIC WASTE VESSEL
RLD-VSL-00007
SECTIONS AND DETAILS

SCALE: NONE
24590-HLW-MV-RLD-00025004
REV 0

SIZE - 44x34
R11297463

COMPUTER GENERATED - MANUAL DESIGN CHANGES NOT PERMITTED

FORM E_MASTER 03/2003

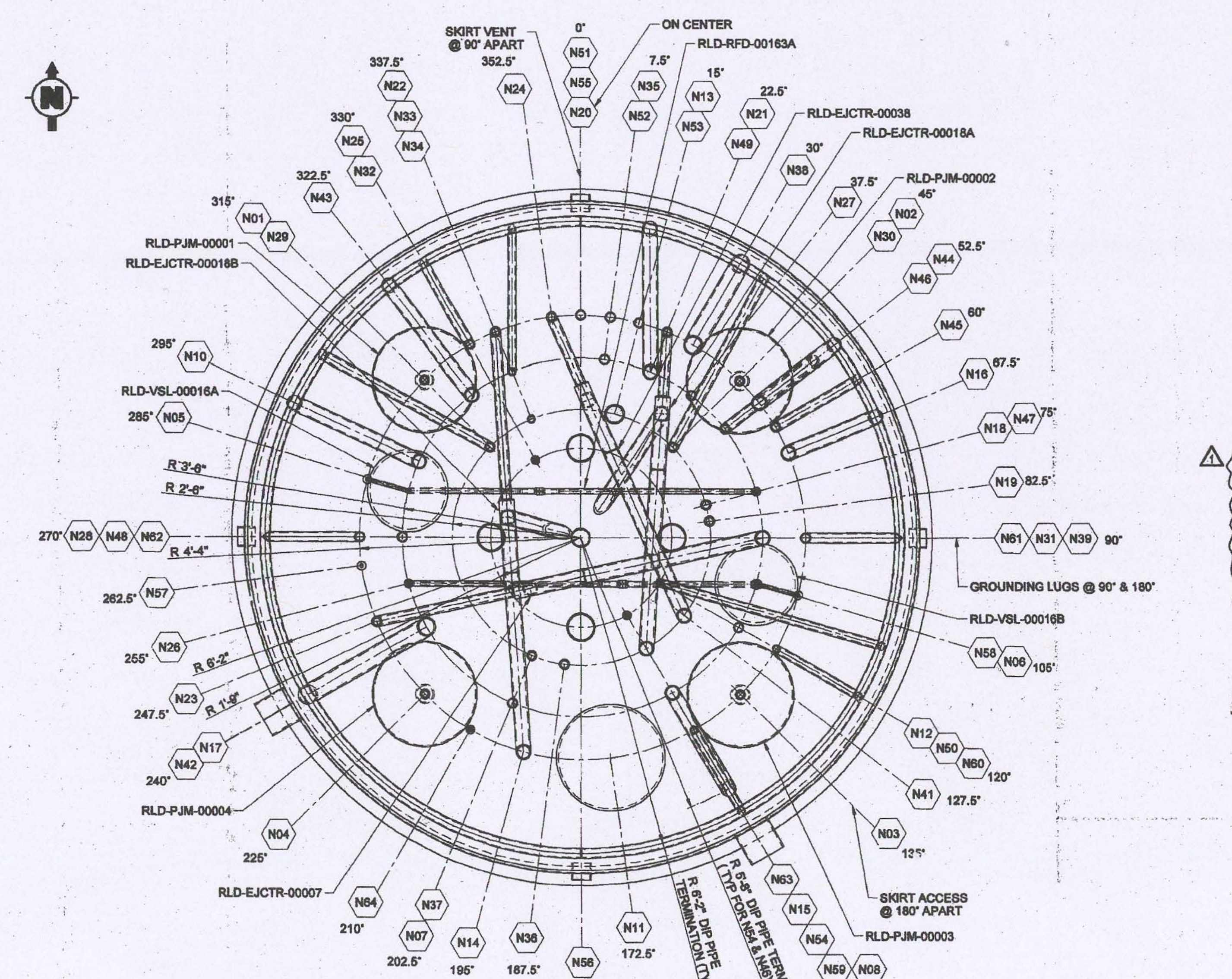

PLAN

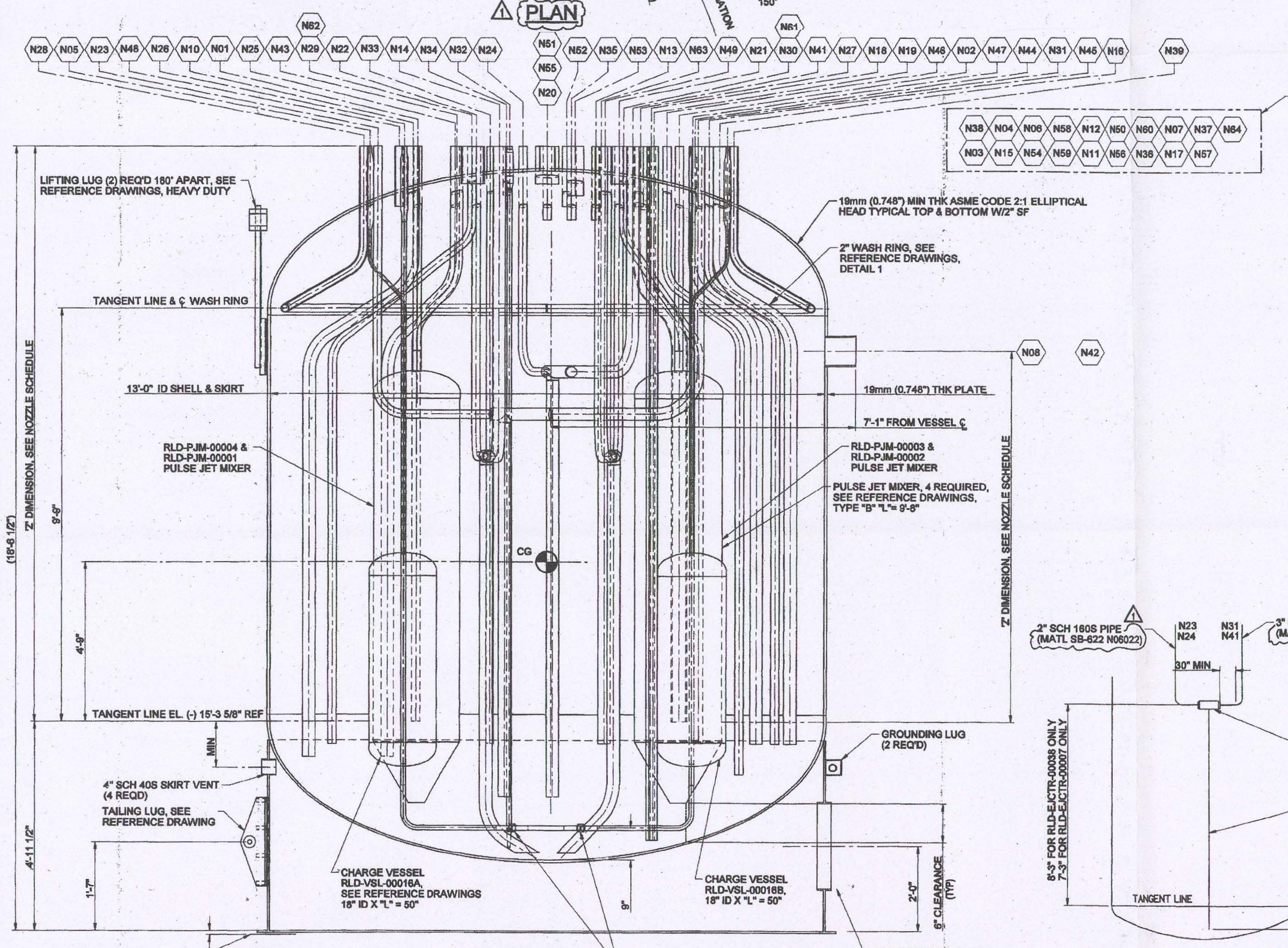

ELEVATION

FOR TRUE ORIENTATION SEE PLAN VIEW

GENERAL NOTES:

1. ALL ANCHOR BOLT HOLES SHALL STRADDLE NORMAL VESSEL CENTER LINE.
2. ALL 'Z' DIMENSIONS MEASURED FROM BOTTOM TANGENT LINE UNLESS OTHERWISE NOTED. FOR SHELL NOZZLE 'Z' DIMENSIONS MEASURED FROM CENTER LINE OF NOZZLE FACE.
3. FOR DISTANCE OF DIP PIPES (LEGS) TO BOTTOM HEAD USE 2" CLEARANCE, UNLESS OTHERWISE SPECIFIED.
4. ALL VESSEL THICKNESSES, SCHEDULE/WALL THICKNESS SHOWN ON NOZZLE TABLE ARE MINIMUM, SELLER TO CONFIRM THE ACTUAL SCHEDULE/WALL THICKNESS TO BE USED FOR NOZZLE CONNECTION.
5. SELLER TO PROVIDE NECESSARY SUPPORT/GUIDE FOR INTERNAL PIPING, CHARGE VESSELS, PULSE JET MIXERS.
6. RFD PUMPS AND EJECTORS SHALL BE PROVIDED BY BUYER FOR SELLER TO INSTALL, ALL OTHER INTERNALS SHALL BE DESIGNED, PROVIDED AND INSTALLED BY SELLER.
7. FOR NOZZLE N18 & N19, END OF DIP TUBE ROUTED TOWARD THE SUCTION AREA OF THE EJECTOR RLD-EJCTR-00018A & RLD-EJCTR-00018B.
8. SELLER SHALL PROVIDE 8 SHIM PACKS COMPRISING OF THE FOLLOWING 10" SQUARE STAINLESS STEEL PLATES:
   - 2 PCS-1/4" THICK PLATES
   - 1 PCS-1/8" THICK PLATES
   - 2 PCS-1/16" THICK PLATES
9. SELLER TO FURNISH 10 PIPE DIAMETERS OF STRAIGHT RUN PIPE ON THE DISCHARGE LINE OF THE EJECTOR BEFORE MAKING ANY BENDS.
10. FOR BASE SUPPORT AND ANCHORAGE REQUIREMENTS, SEE REFERENCE DRAWING 24590-HLW-DD-S13T-00002007.
11. FOR TEMPERATURE NOZZLE (N32 & N63), THE DISTANCE OF DIP PIPE (LEGS) TO BOTTOM HEAD USED 9" CLEARANCE.
12. NOZZLE MATERIAL FOR N08 SHALL BE UNS N08367.
13. NOZZLE N14, N15, N21, N22, N23, N24, N31 & N41 SHALL BE SB-622 N06022 MATERIAL.
14. REVISED:
    a) NOZZLE TABLE BASED ON P & ID REVISION.
    b) REFERENCE DRAWINGS REVISION.
    c) ADDED/REVISED 60° OFFSET DIP PIPES TO NOZZLES N10, N12, N16, N17, N25, N29, N30, N33, N38, N43, N44, N45, N46, N49, N54, N59 & N60.
    d) REVISED THE MATERIAL FOR EJECTOR PIPING AND NOZZLES AS SHOWN TO SB-622 N06022.
    e) ADD DETAIL FOR NOZZLE N21, N22, N23 & N24.

HOLDS

1. FINAL NOZZLE LOCATIONS, SIZE AND 'Z' DIMENSIONS PENDING CONFIRMATION BY PLANT DESIGN.
2. LOCATION FOR NAMEPLATE & BRACKET, ANCHOR BOLT CHAIR BASE PLATE DETAILS, SKIRT VENT AND SKIRT OPENING PENDING PIPING LOCATION BY PLANT DESIGN.
3. LOCATION FOR LIFTING LUGS & TAILING LUG PENDING REVIEW BY CONSTRUCTION.
4. INTERNALS PENDING CONFIRMATION BY FLUIDIC GROUP.

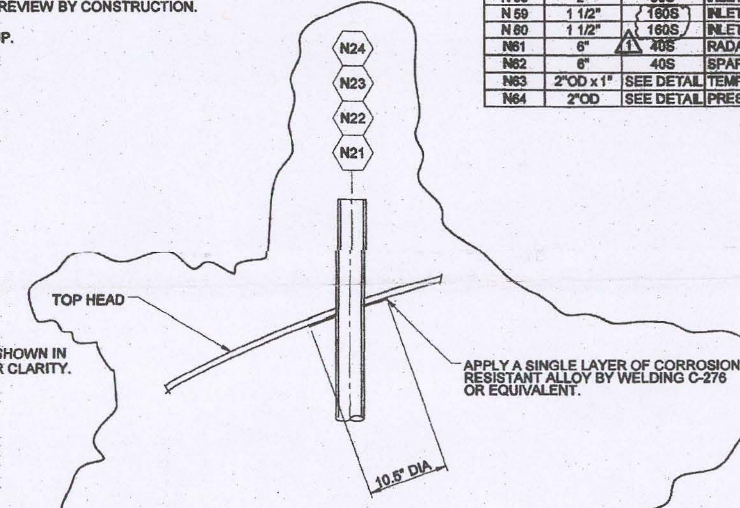

TYPICAL N21, N22, N23 & N24 NOZZLES

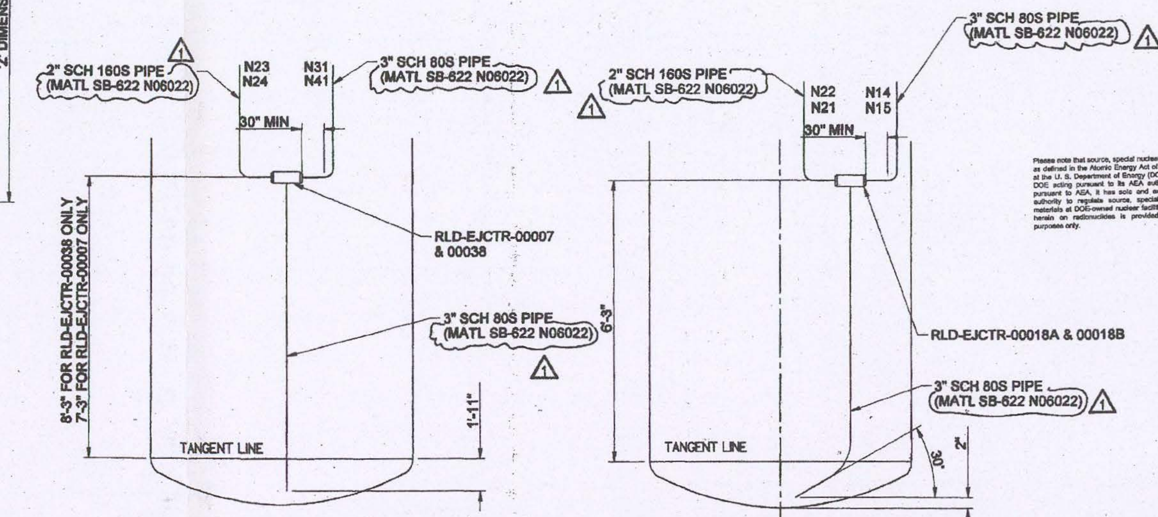

N24/N41 (RLD-EJCTR-00038)
N23/N31(RLD-EJCTR-00007)

N21/N15 (RLD-EJCTR-00018A)
N22/N14(RLD-EJCTR-00018B)

NOZZLE	SIZE	SCH/WALL	SERVICE/REMARKS	"Z" DIM	REF DWG/DET	CONN PIPE SIZE/SCHED
N01	2"	160S	AIR/VACUUM TO RLD-PJM-00001	13' 7"	24590-WTP-MV-M59T-00016001 DET 3	2"-40S
N02	2"	160S	AIR/VACUUM TO RLD-PJM-00002	13' 7"	24590-WTP-MV-M59T-00016001 DET 3	2"-40S
N03	2"	160S	AIR/VACUUM TO RLD-PJM-00003	13' 7"	24590-WTP-MV-M59T-00016001 DET 3	2"-40S
N04	2"	160S	AIR/VACUUM TO RLD-PJM-00004	13' 7"	24590-WTP-MV-M59T-00016001 DET 3	2"-40S
N05	2"OD x 1/2"	SEE DETAIL	AIR/VACUUM TO RLD-VSL-00016A	13' 7"	24590-WTP-MV-M59T-00016001 DET 7	1/2"-40S
N06	2"OD x 1/2"	SEE DETAIL	AIR/VACUUM TO RLD-VSL-00016B	13' 7"	24590-WTP-MV-M59T-00016001 DET 7	1/2"-40S
N07	2"	80S	INLET FROM HSH-SUMP-00006	13' 7"	24590-WTP-MV-M59T-00016001 DET 2	2"-40S
N08	8"	80S	INLET FROM RLD-VSL-00007 (NOTE 12)	8' 11"	24590-WTP-MV-M59T-00016001 DET 1	8"-10S
N09			DELETED			
N10	3"	80S	INLET	13' 7"	24590-WTP-MV-M59T-00016001 DET 4	3"-40S
N11	24"	PLATE	MANWAY	12'-11"	24590-WTP-MV-M59T-00017 DET 1	CAPPED
N12	1 1/2"	160S	OUTLET FROM RLD-EJCTR-00178	13' 7"	24590-WTP-MV-M59T-00016001 DET 4	1 1/2"-40S
N13	2"	80S	SPARE	13' 7"	24590-WTP-MV-M59T-00016001 DET 2	CAPPED
N14	3"	80S	OUTLET FROM RLD-EJCTR-00018B	13' 7"	24590-WTP-MV-M59T-00016001 DET 3	3"-80S
N15	3"	80S	OUTLET FROM RLD-EJCTR-00018A	13' 7"	24590-WTP-MV-M59T-00016001 DET 3	3"-80S
N16	3"	80S	INLET	13' 7"	24590-WTP-MV-M59T-00016001 DET 4	3"-40S
N17	4"	80S	INLET	13' 7"	24590-WTP-MV-M59T-00016001 DET 4	4"-40S
N18	2"	160S	INLET WASH LINES (DIP LEG)	13' 7"	24590-WTP-MV-M59T-00016001 DET 4	2"-40S
N19	2"	160S	INLET WASH LINES (DIP LEG)	13' 7"	24590-WTP-MV-M59T-00016001 DET 4	2"-40S
N20	4"	80S	VENT (SPARE)	13' 7"	24590-WTP-MV-M59T-00016001 DET 1	CAPPED
N21	2"	160S	STEAM TO RLD-EJCTR-00018A	13' 7"	24590-WTP-MV-M59T-00016001 DET 3	2"-40S
N22	2"	160S	STEAM TO RLD-EJCTR-00018B	13' 7"	24590-WTP-MV-M59T-00016001 DET 3	2"-40S
N23	2"	160S	STEAM TO RLD-EJCTR-00007	13' 7"	24590-WTP-MV-M59T-00016001 DET 3	2"-40S
N24	2"	160S	STEAM TO RLD-EJCTR-00038	13' 7"	24590-WTP-MV-M59T-00016001 DET 3	2"-40S
N25	2"	160S	INLET FROM DRUM TRANSFER TUNNEL SUMPS	13' 7"	24590-WTP-MV-M59T-00016001 DET 4	2"-40S
N26	2"OD x 1"	SEE DETAIL	OUTLET TO AUTOSAMPLER	13' 7"	24590-WTP-MV-M59T-00016001 DET 7	1"-40S
N27	2"	160S	AUTOSAMPLER RETURN	13' 7"	24590-WTP-MV-M59T-00016001 DET 2	2"-40S
N28	2"	160S	INLET WASH RING	13' 7"	24590-WTP-MV-M59T-00016001 DET 3	2"-40S
N29	2"	160S	SPARE DIP LEG	13' 7"	24590-WTP-MV-M59T-00016001 DET 4	2"-40S
N30	2"	160S	SPARE DIP LEG	13' 7"	24590-WTP-MV-M59T-00016001 DET 4	2"-40S
N31	3"	80S	OUTLET FROM RLD-EJCTR-00007	13' 7"	24590-WTP-MV-M59T-00016001 DET 3	3"-40S
N32	2"OD	SEE DETAIL	TEMPERATURE	13' 7"	24590-WTP-MV-M59T-00007 ASSY 1 DET 5	1"-40S
N33	1 1/2"	160S	FROM HFP-SUMP-00002	13' 7"	24590-WTP-MV-M59T-00016001 DET 4	1 1/2"-40S
N34	1 1/2"	160S	FROM HSH-SUMP-00003	13' 7"	24590-WTP-MV-M59T-00016001 DET 4	1 1/2"-40S
N35	2"	80S	CRANE MAINTENANCE SUMP	13' 7"	24590-WTP-MV-M59T-00016001 DET 2	2"-40S
N36	2"	80S	RLD-WBOX-00077	13' 7"	24590-WTP-MV-M59T-00016001 DET 2	2"-80S
N37	2"	80S	RLD-WBOX-00077	13' 7"	24590-WTP-MV-M59T-00016001 DET 2	2"-80S
N38	4"	80S	HFP-SUMP-00001	13' 7"	24590-WTP-MV-M59T-00016001 DET 4	4"-40S
N39	2"	160S	INLET WASH RING	13' 7"	24590-WTP-MV-M59T-00016001 DET 3	2"-40S
N40			DELETED			
N41	3"	80S	OUTLET FROM RLD-EJCTR-00038	13' 7"	24590-WTP-MV-M59T-00016001 DET 3	3"-40S
N42	8"	40S	OVERFLOW	8' 11"	24590-WTP-MV-M59T-00016001 DET 1	8"-10S
N43	3"	80S	HEADER	13' 7"	24590-WTP-MV-M59T-00016001 DET 4	3"-40S
N44	3"	80S	OVERFLOW FROM RLD-BRKPT-00004	13' 7"	24590-WTP-MV-M59T-00016001 DET 4	3"-40S
N45	2"	160S	INLET	13' 7"	24590-WTP-MV-M59T-00016001 DET 4	2"-40S
N46	2"	160S	INLET	13' 7"	24590-WTP-MV-M59T-00016001 DET 4	2"-40S
N47	2"OD x 1"	SEE DETAIL	OUTLET TO AUTOSAMPLER	13'-7"	24590-WTP-MV-M59T-00016001 DET 7	1"-40S
N48	2"	80S	AUTOSAMPLER RETURN	13'-7"	24590-WTP-MV-M59T-00016001 DET 2	2"-40S
N49	3"	80S	INLET	13'-7"	24590-WTP-MV-M59T-00013001 DET 4	3"-40S
N50	2"	80S	INLET FROM HFP-EJCTR-00001	13'-7"	24590-WTP-MV-M59T-00016001 DET 2	2"-80S
N51	2"	80S	INLET FROM HFP-EJCTR-00002	13'-7"	24590-WTP-MV-M59T-00016001 DET 2	2"-80S
N52	2"	80S	INLET FROM PCW-VSL-00007	13'-7"	24590-WTP-MV-M59T-00016001 DET 2	2"-40S
N53	4"	80S	DRAIN HEADER	13'-7"	24590-WTP-MV-M59T-00016001 DET 2	4"-40S
N54	3"	80S	INLET	13'-7"	24590-WTP-MV-M59T-00016001 DET 4	3"-40S
N55	6"	40S	RADAR LEVEL INSTRUMENT	13'-7"	24590-WTP-MV-M59T-00016003 DET 24	1-1/2"-40S
N56	6"	40S	RADAR LEVEL INSTRUMENT	13'-7"	24590-WTP-MV-M59T-00016003 DET 24	1-1/2"-40S
N57	2"OD	SEE DETAIL	AIR INLET	13'-7"	24590-WTP-MV-M59T-00016001 DET 6	1/2"-40S
N58	2"	80S	INLET FROM NLD-TK-00006	13'-7"	24590-WTP-MV-M59T-00016001 DET 2	2"-40S
N59	1 1/2"	160S	INLET FROM RLD-EJCTR-00052A	13'-7"	24590-WTP-MV-M59T-00016001 DET 4	1 1/2"-40S
N60	1 1/2"	160S	INLET FROM RLD-EJCTR-00052B	13'-7"	24590-WTP-MV-M59T-00016001 DET 4	1 1/2"-40S
N61	6"	40S	RADAR LEVEL INSTRUMENT	13'-7"	24590-WTP-MV-M59T-00016003 DET 24	1-1/2"-40S
N62	6"	40S	SPARE RADAR LEVEL INSTRUMENT	13'-7"	24590-WTP-MV-M59T-00016003 DET 24	1-1/2"-40S
N63	2"OD x 1"	SEE DETAIL	TEMPERATURE (SPARE)	13'-7"	24590-WTP-MV-M59T-00007 ASSY 1 DET 5	1"-40S
N64	2"OD	SEE DETAIL	PRESSURE	13'-7"	24590-WTP-MV-M59T-00016001 DET 5	1/2"-40S

VESSEL COMPONENT QUALITY LEVELS	
COMPONENTS	QUALITY LEVEL
MAIN VESSEL AND NOZZLES	QL-I
SKIRT	QL-I
PULSE JET MIXERS AND ASSOCIATED PIPING	QL-I
CHARGE VESSEL AND ASSOCIATED PIPING	QL-I
EJECTORS & WASH RING ASSOCIATED PIPING	QL-2
RFD'S AND ASSOCIATED PIPING	QL-I
EJECTORS (BY OTHERS)	CM

THIS DRAWING TO BE READ IN CONJUNCTION WITH THE MECHANICAL DATA SHEET NO 24590-HLW-MVD-RLD-00007

Please note that source, special nuclear, and byproduct materials, as defined in the Atomic Energy Act of 1954 (AEA) are regulated at the U. S. Department of Energy (DOE) facilities exclusively by DOE acting pursuant to its AEA authority. DOE asserts that pursuant to AEA, it has sole and exclusive responsibility and authority to regulate source, special nuclear, and byproduct materials at DOE-owned nuclear facilities. Information contained herein on radionuclides is provided for process description purposes only.

REFERENCE DRAWINGS		
DWG NO	REV	TITLE
24590-HLW-M6-RLD-00002	1	P & ID
24590-HLW-M6-RLD-00007	1	P & ID
24590-WTP-MV-M59T-00001	3	PRESSURE VESSEL TOLERANCES STANDARD DETAILS
24590-WTP-MV-M59T-00004	1	PULSE JET MIXERS STANDARD DETAILS
24590-WTP-MV-M59T-00007	3	THERMOWELL CONNECTION STANDARD DETAILS
24590-WTP-MV-M59T-00009	2	LIFTING LUG STANDARD DETAILS
24590-WTP-MV-M59T-00010	2	TAILING LUG STANDARD DETAILS
24590-WTP-MV-M59T-00011	2	WASH RINGS STANDARD DETAILS
24590-WTP-MV-M59T-00012	1	GROUNDING LUG STANDARD DETAILS
24590-WTP-MV-M59T-00013	1	CHARGE VESSEL STANDARD DETAILS
24590-WTP-MV-M59T-00014	1	RFD PUMPS DETAIL
24590-WTP-MV-M59T-00016001	3	VESSEL CONNECTIONS STANDARD DETAILS SHT 1 OF 3
24590-WTP-MV-M59T-00016002	2	VESSEL CONNECTIONS STANDARD DETAILS SHT 2 OF 3
24590-WTP-MV-M59T-00016003	1	VESSEL CONNECTIONS STANDARD DETAILS SHT 3 OF 3
24590-WTP-MV-M59T-00017	1	VESSEL INSPECTION MANWAY STANDARD DETAILS
24590-WTP-MV-M59T-00018	2	VESSEL NAME PLATE STANDARD DETAILS
24590-HLW-DD-S13T-00002007	4	HLW VITRIFICATION BLDG CONCRETE EQUIP SUPPORT DET EL (-) 21'-0"
24590-WTP-PW-P30T-00001	0	WTP END PREP DETAIL FOR FIELD BUTT WELDS

REV	DESCRIPTION	ORG	CHKD	RVWD	APVD	DATE
1	REVISED AS NOTED, SEE NOTE 14	[signature]	CS	[signature]	[signature]	6/3/04
0	REVISED AS NOTED, SEE NOTE 13 & ISSUED FOR PURCHASE	RR/SL	CS	MW	MH	09/03/03

REVISION HISTORY

Q

ISSUED BY RPP-WTP PDC [stamp]

PROJECT No.	24590
SITE	HANFORD
AREA	200E
BUILDING No.	30

	BY	DATE
ORIGINATOR	R. RAVULA / S. LEE	09/02/03
CHECKER	C. SLATER	09/02/03
APPROVER	M. HOFFMANN	09/03/03
REVIEWER	M. WRIGHT	09/03/03

CONTENT APPLICABLE TO ALARA? [X] YES [ ] NO

ADR NO. 24590-HLW-ADR-M-02-016 REV: 0

RIVER PROTECTION PROJECT
WASTE TREATMENT PLANT
2435 STEVENS CENTER PLACE
RICHLAND, WA 99352

CONTRACT No: DE-AC27-01RV14136

EQUIPMENT ASSEMBLY PLANT WASH & DRAINS VESSEL RLD-VSL-00008

SCALE: NONE

24590-HLW-MV-RLD-00004 REV 1

'E' SIZE - 44x34

COMPUTER GENERATED BY SOLID EDGE- MANUAL CHANGES NOT PERMITTED

WHEN REFERENCING DRAWING AND DIM NUMBERS IN DOCUMENTS, BE SURE TO INCLUDE DASHES BETWEEN ELEMENTS

06/03/2004 12:48:22 PM

FORM E_MASTER 08/2003

R10316658

ITEM	QTY	MATERIAL	DESCRIPTION
1	AR	SEE NOTE 7	1/2 (MIN) WALL X 1 1/2 LONG, ROUND BAR, GUIDE RING (NOTE 5)
2	AR	SEE NOTE 7	3/4 (MIN) X 3 (MIN) BAR, SPACER
3	AR	SEE NOTE 7	3/4 (MIN) X 2 (MIN) BAR, SPACER
4	AR	SEE NOTE 7	1/4 (MIN) PLATE, CAP
5	AR	SEE NOTE 7	1 1/2 (MIN) PLATE, GUIDE RING (NOTE 5) WIDTH AS REQUIRED
6	AR	SEE NOTE 7	3" NPS SCHEDULE 80 SEAMLESS PIPE
7	2	SEE NOTE 7	3" NPS SCHEDULE 80 LONG RADIUS ELBOW (BUTT WELD)

PLEASE NOTE THAT SOURCE AND/OR SPECIAL NUCLEAR AND BYPRODUCT MATERIALS, AS DEFINED IN THE ATOMIC ENERGY ACT OF 1954 (AEA), ARE REGULATED AT THE U.S. DEPARTMENT OF ENERGY (DOE) FACILITIES EXCLUSIVELY BY THE DOE ACTING PURSUANT TO ITS AEA AUTHORITY. THE DOE ASSERTS THAT PURSUANT TO THE AEA, IT HAS SOLE AND EXCLUSIVE RESPONSIBILITY AND AUTHORITY TO REGULATE SOURCE, SPECIAL NUCLEAR, AND BYPRODUCT MATERIALS AT DOE-OWNED NUCLEAR FACILITIES. INFORMATION CONTAINED HEREIN ON RADIONUCLIDES IS PROVIDED FOR PROCESS DESCRIPTION PURPOSES ONLY.

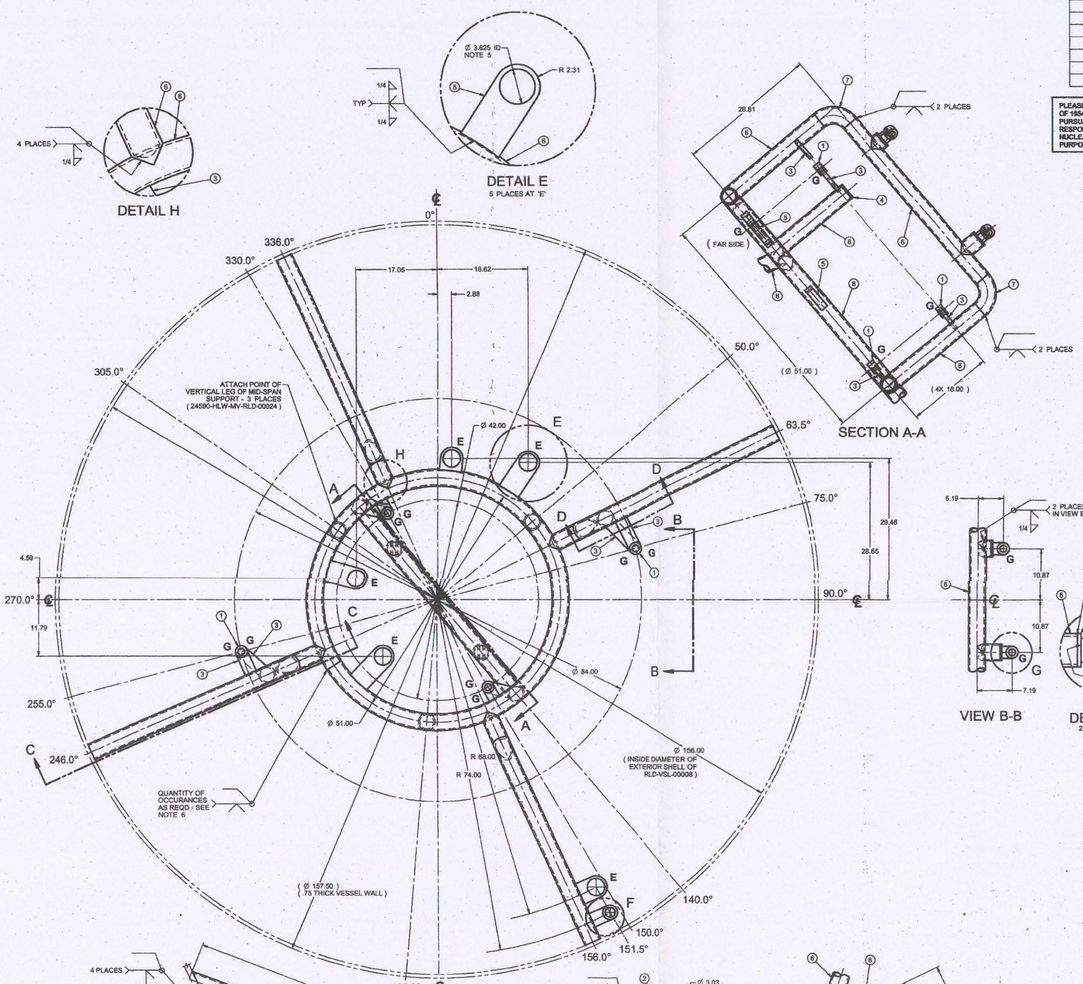

GENERAL NOTES

1. DIMENSIONING AND TOLERANCING PER ASME Y14.5
2. THIS DRAWING PROVIDES INFORMATION TO PLACE ADDITIONAL SEISMIC GUIDE/SUPPORT STRUCTURE INSIDE OF HLW VESSEL RLD-VSL-00008 FOR ADDED INTERNAL STRUCTURAL SUPPORT.
3. WELDING AND NDE SHALL BE IN ACCORDANCE WITH VESSEL SPECIFICATION 24590-WTP-3PS-MVD0-T0001.
4. CONTENTS OF THIS DOCUMENT ARE DANGEROUS WASTE PERMIT AFFECTING.
5. GUIDE RINGS ARE BORED TO MAINTAIN 1/16" (.063") MAXIMUM GAP ON A SIDE FOR 1/8" (.125") MAXIMUM DIAMETRAL CLEARANCE WITH PIPE.
6. CENTER SUPPORT RING MAY BE FABRICATED IN AS MANY SECTIONS AS NEEDED.
7. MATERIALS ARE PER THE FOLLOWING MECHANICAL SYSTEMS DATA SHEET: 24590-HLW-MVD-RLD-00007, AND ADDITIONALLY, BAR STOCK IS PER SA 479 TYPE 316 (.03% CARBON MAX).

REFERENCE DRAWINGS	
DWG NO	TITLE
24590-HLW-MV-RLD-00004	EQUIPMENT ASSEMBLY PLANT WASH & DRAINS VESSEL RLD-VSL-00008
24590-HLW-MV-RLD-00020	RLD-VSL-00008 LOW SIDE WALL MTD SEISMIC GUIDE/SPRTS, 6'-6" ABOVE TAN LINE OF BOT HEAD
24590-HLW-MV-RLD-00021	RLD-VSL-00008 UPPER GUIDE/SUPPORT 6'-2" ABOVE TAN LINE OF BOTTOM HEAD
24590-HLW-MV-RLD-00022	RLD-VSL-00008 UP SIDE WALL MTD SEISMIC GUIDE/SPRTS, 7'-0" ABOVE TAN LINE OF BOT HEAD
24590-HLW-MV-RLD-00024	RLD-VSL-00008 MID-SPAN SEISMIC GUIDE/SPRT 4'-10" ABOVE TAN LINE OF BOT HEAD

REV	DESCRIPTION	ORG	CHKD	REVIEW	APPD	DATE
0	ISSUED FOR PURCHASE	AJP	[illegible]	[illegible]	[illegible]	11/9/07

REVISION HISTORY

Q

Please note that source, special nuclear, and byproduct materials, as defined in the Atomic Energy Act of 1954 (AEA), are regulated at the U.S. Department of Energy (DOE) facilities exclusively by the DOE acting pursuant to its AEA authority. DOE asserts that pursuant to AEA, it has sole and exclusive responsibility and authority to regulate source, special nuclear, and byproduct materials at DOE-owned nuclear facilities. Information contained herein on radionuclides is provided for process description purposes only.

ISSUED BY RPP-WTP PDC

PROJECT No.	24590
SITE	HANFORD
AREA	2000
BUILDING No.	30

RIVER PROTECTION PROJECT
WASTE TREATMENT PLANT
2435 STEVENS CENTER PLACE
RICHLAND, WA 99354

CONTRACT No: DE-AC27-01RV14136

	BY	DATE
ORIGINATOR	[illegible]	9-3-2009
CHECKER	[illegible]	9-9-2009
APPROVER	[illegible]	9/9/09
REVIEWER	[illegible]	9/9/09

THIRD ANGLE PROJECTION

TOLERANCES	
.00	±.50"
FRACTION	± 1/16"
ANGLE	± 5°

CONTENT APPLICABLE TO ALARA? [X] YES [ ] NO
ACR NO. 24590-WTP-ACR-MA-08 REV: 2
SAFETY SCREEN REQUIRED? [ ] YES [X] NO (SAVE INITIAL IF YES) ____

RLD-VSL-00008
LOWER SEISMIC GUIDE/SUPPORT
0'-6" ABOVE TANGENT LINE OF BOTTOM HEAD

SCALE: NONE

24590-HLW-MV-RLD-00019 REV 0

W SIZE - 44x34
COMPUTER GENERATED - MANUAL DESIGN CHANGES NOT PERMITTED
WHEN REVISIONS ARE MADE TO DRAWING AND TBI MEMBERS IN DOCUMENTS, BE SURE TO INCLUDE CHANGES BETWEEN DOCUMENTS
09/25/2009 7:23 AM

FORM 11_MASTER 09/2009

N1112706

ITEM	QTY	MATERIAL	DESCRIPTION
1	AR	SEE NOTE 6	1/2 (MIN) WALL X 1 1/2 LONG, ROUND BAR, GUIDE RING (NOTE 5)
2	AR	SEE NOTE 6	3/4 (MIN) X 3 (MIN) BAR, SPACER
3	AR	SEE NOTE 6	1/4 (MIN) PLATE, CAP
4	AR	SEE NOTE 6	1 1/2 (MIN) PLATE, GUIDE RING (NOTE 5)
5	AR	SEE NOTE 6	2" NPS SCHEDULE 160 SEAMLESS PIPE

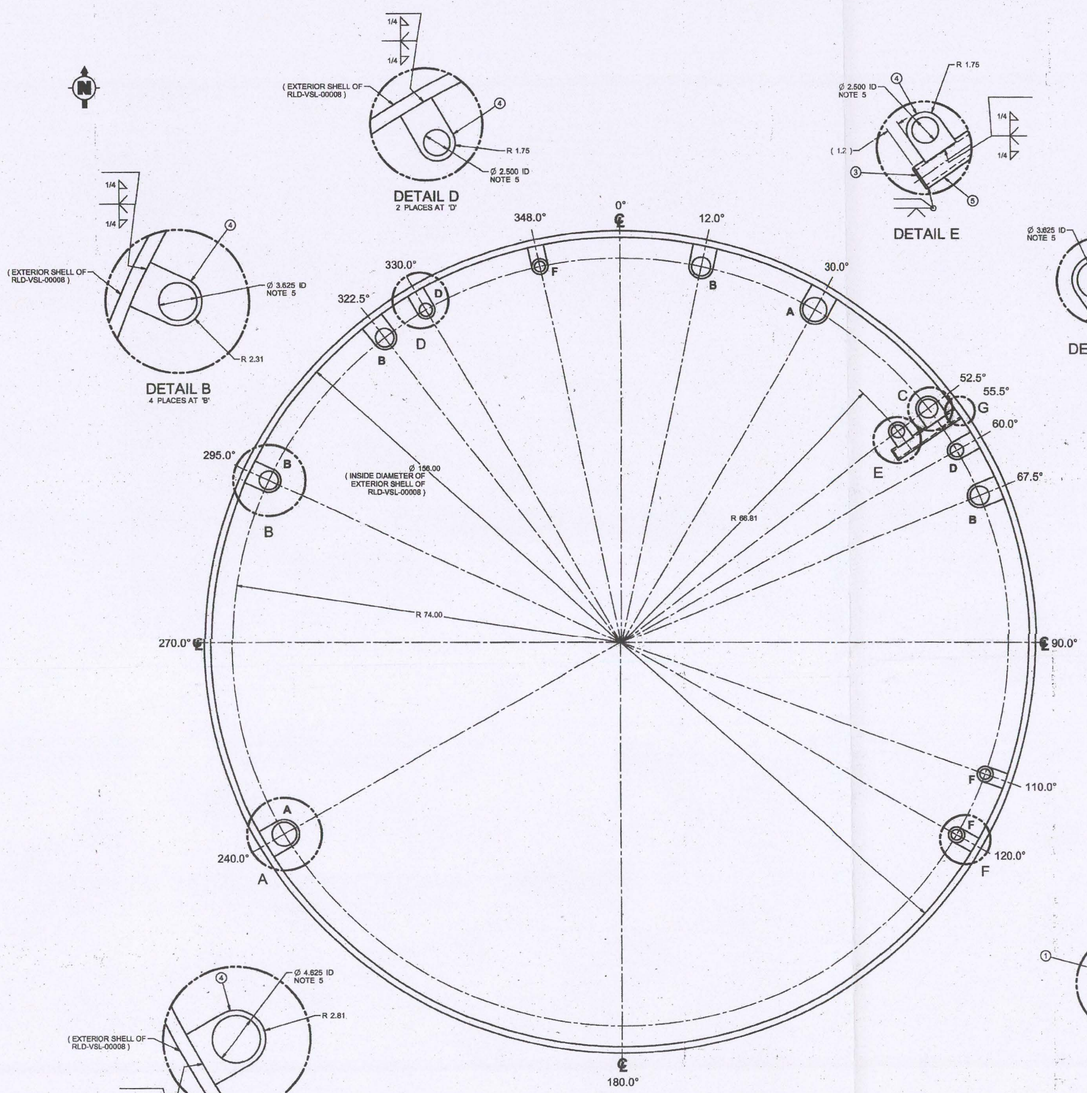

DETAIL D
2 PLACES AT 'D'

DETAIL B
4 PLACES AT 'B'

DETAIL E

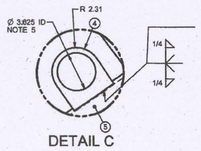

DETAIL C

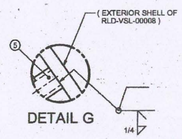

DETAIL G

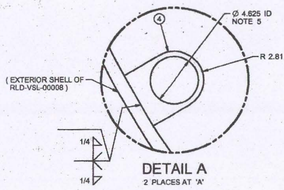

DETAIL A
2 PLACES AT 'A'

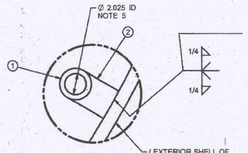

DETAIL F
3 PLACES AT 'F'

PLEASE NOTE THAT SOURCE AND/OR SPECIAL NUCLEAR AND BYPRODUCT MATERIALS, AS DEFINED IN THE ATOMIC ENERGY ACT OF 1954 (AEA), ARE REGULATED AT THE U.S. DEPARTMENT OF ENERGY (DOE) FACILITIES EXCLUSIVELY BY THE DOE ACTING PURSUANT TO ITS AEA AUTHORITY. THE DOE ASSERTS THAT PURSUANT TO THE AEA, IT HAS SOLE AND EXCLUSIVE RESPONSIBILITY AND AUTHORITY TO REGULATE SOURCE, SPECIAL NUCLEAR, AND BYPRODUCT MATERIALS AT DOE-OWNED NUCLEAR FACILITIES. INFORMATION CONTAINED HEREIN ON RADIONUCLIDES IS PROVIDED FOR PROCESS DESCRIPTION PURPOSES ONLY.

GENERAL NOTES

1. DIMENSIONING AND TOLERANCING PER ASME Y14.5
2. THIS DRAWING PROVIDES INFORMATION TO PLACE ADDITIONAL SEISMIC GUIDE/SUPPORT STRUCTURE INSIDE OF HLW VESSEL RLD-VSL-00008 FOR ADDED INTERNAL STRUCTURAL SUPPORT.
3. WELDING AND NDE SHALL BE IN ACCORDANCE WITH VESSEL SPECIFICATION 24590-WTP-3PS-MV00-T0001.
4. CONTENTS OF THIS DOCUMENT ARE DANGEROUS WASTE PERMIT AFFECTING.
5. GUIDE RINGS ARE BORED TO MAINTAIN 1/16" (.063") MAX GAP ON A SIDE FOR 1/8" (.125") MAXIMUM DIAMETRAL CLEARANCE WITH PIPE.
6. MATERIALS ARE PER THE FOLLOWING MECHANICAL SYSTEMS DATA SHEET: 24590-HLW-MVD-RLD-00007, AND ADDITIONALLY, BAR STOCK IS PER SA 479 TYPE 316 (.03% CARBON MAX).

REFERENCE DRAWINGS	
DWG NO	TITLE
24590-HLW-MV-RLD-00004	EQUIPMENT ASSEMBLY PLANT WASH & DRAINS VESSEL RLD-VSL-00008
24590-HLW-MV-RLD-00019	RLD-VSL-00009 LOW SEISMIC GUIDE/SUPPORT 0'-6" ABOVE TAN LINE OF BOT HEAD
24590-HLW-MV-RLD-00021	RLD-VSL-00009 UPPER GUIDE/SUPPORT 0'-2" ABOVE TAN LINE OF BOTTOM HEAD
24590-HLW-MV-RLD-00022	RLD-VSL-00009 6P SIDE WALL MTD SEISMIC GUIDE/SPRTS, 7'-0" ABOVE TAN LINE OF BOT HEAD
24590-HLW-MV-RLD-00024	RLD-VSL-00009 MID-SPAN SEISMIC GUIDE/SPRT 4'-10" ABOVE TAN LINE OF BOT HEAD

REV	DESCRIPTION	ORG	CHKD	RVWD	APVD	DATE
0	ISSUED FOR PURCHASE	AJP	BEQ	AP	AP	9/17/09

REVISION HISTORY

Please note that source, special nuclear, and byproduct materials, as defined in the Atomic Energy Act of 1954 (AEA) are regulated at the U. S. Department of Energy (DOE) facilities exclusively by DOE acting pursuant to its AEA authority. DOE asserts that pursuant to AEA, it has sole and exclusive responsibility and authority to regulate source, special nuclear, and byproduct materials at DOE-owned nuclear facilities. Information contained herein on radionuclides is provided for process description purposes only.

Q

ISSUED BY: RPP-WTP PDC

PROJECT No.	24590
SITE	HANFORD
AREA	200E
BUILDING No.	30

BIKE STAMP

	BY	DATE
ORIGINATOR	[illegible]	9-8-2009
CHECKER	[illegible]	9-9-2009
APPROVER	[illegible]	9/17/09
REVIEWER	[illegible]	9/9/09

THIRD ANGLE PROJECTION

TOLERANCES	
.00	±.50"
FRACTION	± 1/16"
ANGLE	± 5°

CONTENT APPLICABLE TO ALARA? [X] YES [ ] NO

AGN NO. 24590-WTP-ACD-MG-03-05 REV. 3

SAFETY SCREEN REQUIRED? [ ] YES [X] NO (SAME INITIAL IF YES)

RIVER PROTECTION PROJECT
WASTE TREATMENT PLANT
2435 STEVENS CENTER PLACE
RICHLAND, WA 99354

CONTRACT No: DE-AC27-01RV14136

RLD-VSL-00008
LOWER SIDE WALL MOUNTED SEISMIC GUIDE/SUPPORTS, 0'-6" ABOVE TANGENT LINE OF BOTTOM HEAD

SCALE: NONE

24590-HLW-MV-RLD-00020

REV 0

"E" SIZE - 44x34

COMPUTER GENERATED - MANUAL DESIGN CHANGES NOT PERMITTED

WHEN REFERENCING DRAWING AND CNM NUMBERS IN DOCUMENTS, BE SURE TO INCLUDE DASHES BETWEEN ELEMENTS

09/24/2009 7:23 AM

FORM-E_MASTER 09/2003

R11121796

ITEM	QTY	MATERIAL	DESCRIPTION
1	AR	SEE NOTE 7	1/2 (MIN) WALL X 1 1/2 LONG, ROUND BAR, GUIDE RING (NOTE 5)
2	AR	SEE NOTE 7	3/4 (MIN) X 3 (MIN) BAR, BACKING PLATE
3	AR	SEE NOTE 7	1 1/2 (MIN) PLATE, GUIDE RING (NOTE 5)
4	AR	SEE NOTF 7	2" NPS SCHEDULE 160 SEAMLESS PIPE

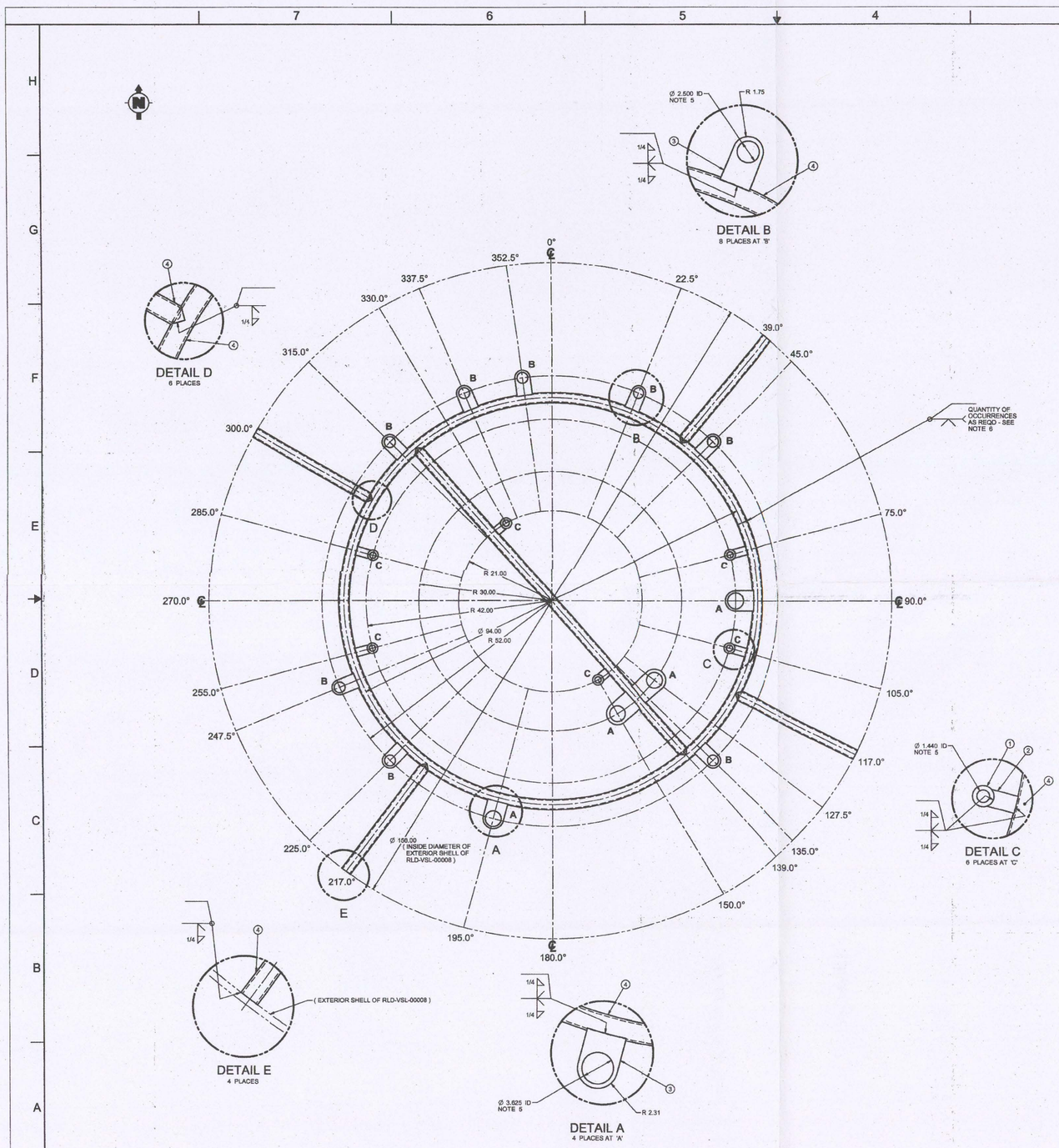

PLEASE NOTE THAT SOURCE AND/OR SPECIAL NUCLEAR AND BYPRODUCT MATERIALS, AS DEFINED IN THE ATOMIC ENERGY ACT OF 1954 (AEA), ARE REGULATED AT THE U.S. DEPARTMENT OF ENERGY (DOE) FACILITIES EXCLUSIVELY BY THE DOE ACTING PURSUANT TO ITS AEA AUTHORITY. THE DOE ASSERTS THAT PURSUANT TO THE AEA, IT HAS SOLE AND EXCLUSIVE RESPONSIBILITY AND AUTHORITY TO REGULATE SOURCE, SPECIAL NUCLEAR, AND BYPRODUCT MATERIALS AT DOE-OWNED NUCLEAR FACILITIES. INFORMATION CONTAINED HEREIN ON RADIONUCLIDES IS PROVIDED FOR PROCESS DESCRIPTION PURPOSES ONLY.

GENERAL NOTES

1. DIMENSIONING AND TOLERANCING PER ASME Y14.5
2. THIS DRAWING PROVIDES INFORMATION TO PLACE ADDITIONAL SEISMIC GUIDE/SUPPORT STRUCTURE INSIDE OF HLW VESSEL RLD-VSL-00008 FOR ADDED INTERNAL STRUCTURAL SUPPORT.
3. WELDING AND NDE SHALL BE IN ACCORDANCE WITH VESSEL SPECIFICATION 24590-WTP-3PS-MV00-T0001.
4. CONTENTS OF THIS DOCUMENT ARE DANGEROUS WASTE PERMIT AFFECTING.
5. GUIDE RINGS ARE BORED TO MAINTAIN 1/16" (.063") MAX GAP ON A SIDE FOR 1/8" (.125") MAXIMUM DIAMETRAL CLEARANCE WITH PIPE.
6. CENTER SUPPORT RING MAY BE FABRICATED IN AS MANY SECTIONS AS NEEDED.
7. MATERIALS ARE PER THE FOLLOWING MECHANICAL SYSTEMS DATA SHEET: 24590-HLW-MVD-RLD-00007, AND ADDITIONALLY, BAR STOCK IS PER SA 479 TYPE 316 (.03% CARBON MAX).

REFERENCE DRAWINGS	
DWG NO	TITLE
24590-HLW-MIV-RLD-00004	EQUIPMENT ASSEMBLY PLANT WASH & DRAINS VESSEL RLD-VSL-00008
24590-HLW-MV-RLD-00019	RLD-VSL-00008 LOW SEISMIC GUIDER/SUPPORT 0'-4" ABOVE TAN LINE OF BOT HEAD
24590-HLW-MIV-RLD-00020	RLD-VSL-00008 LOW SIDE WALL MTD SEISMIC GUIDER/PRTS, 0'-4" ABOVE TAN LINE OF BOT HEAD
24590-HLW-MIV-RLD-00022	RLD-VSL-00008 UP SIDE WALL MTD SEISMIC GUIDER/PRTS, 7'-4" ABOVE TAN LINE OF BOT HEAD
24590-HLW-MIV-RLD-00024	RLD-VSL-00008 MID-SPAN SEISMIC GUIDER/SPRT 4'-10" ABOVE TAN LINE OF BOT HEAD

Please note that source, special nuclear, and byproduct materials, as defined in the Atomic Energy Act of 1954 (AEA) are regulated at the U. S. Department of Energy (DOE) facilities exclusively by the DOE acting pursuant to AEA. The DOE asserts that pursuant to AEA, it has sole and exclusive responsibility and authority to regulate source, special nuclear, and byproduct materials at DOE-owned nuclear facilities. Information contained herein on radionuclides is provided for process description purposes only.

REV	DESCRIPTION	ORG	CHKD	RVWD	APVD	DATE
0	ISSUED FOR PURCHASE	AJP	EGD			9/17/09

REVISION HISTORY

Q

ISSUED BY bpm-WTP PDC

PROJECT No:	24590	
SITE	HANFORD	
AREA	200E	
BUILDING No:	30	

BMLE STAMP

	BY	DATE
ORIGINATOR		9-5-2007
CHECKER		9-9-2009
APPROVER		9/17/09
REVIEWER		9/9/09

THIRD ANGLE PROJECTION

TOLERANCES	
.00	±.50"
FRACTION	± 1/16"
ANGLE	± 5°

CONTENT APPLICABLE TO ALARA? [X] YES [ ] NO

ADR NO. 24590-WTP-ADR-M-03-009 REV. 2

SAFETY SCREEN REQUIRED? [ ] YES [X] NO (SAME INITIAL IF YES)

RIVER PROTECTION PROJECT
WASTE TREATMENT PLANT
2435 STEVENS CENTER PLACE
RICHLAND, WA 99354

CONTRACT No: DE-AC27-01RV14136

RLD-VSL-00008
UPPER SEISMIC GUIDE/SUPPORT
9'-3" ABOVE TANGENT LINE OF BOTTOM HEAD

SCALE: NONE

24590-HLW-MV-RLD-00021

REV 0

TO SIZE - 44x34

COMPUTER GENERATED - MANUAL DESIGN CHANGES NOT PERMITTED !

WHEN REFERENCING DRAWING AND DIM NUMBERS IN DOCUMENTS, BE SURE TO INCLUDE DASHES BETWEEN ELEMENTS

03/04/2003 7:23 AM

R11121797

FORM E_MASTER 03/2002

ITEM	QTY	MATERIAL	DESCRIPTION
1	AR	SEE NOTE 6	1/2 (MIN) WALL X 1 1/2 LONG, ROUND BAR, GUIDE RING (NOTE 5)
2	AR	SEE NOTE 6	3/4 (MIN) X 3 (MIN) BAR, SPACER PLATE
3	AR	SEE NOTE 6	1/4 (MIN) PLATE, CAP
4	AR	SEE NOTE 6	1 1/2 (MIN) PLATE, GUIDE RING (NOTE 5)
5	AR	SEE NOTE 6	2" NPS SCHEDULE 160 SEAMLESS PIPE

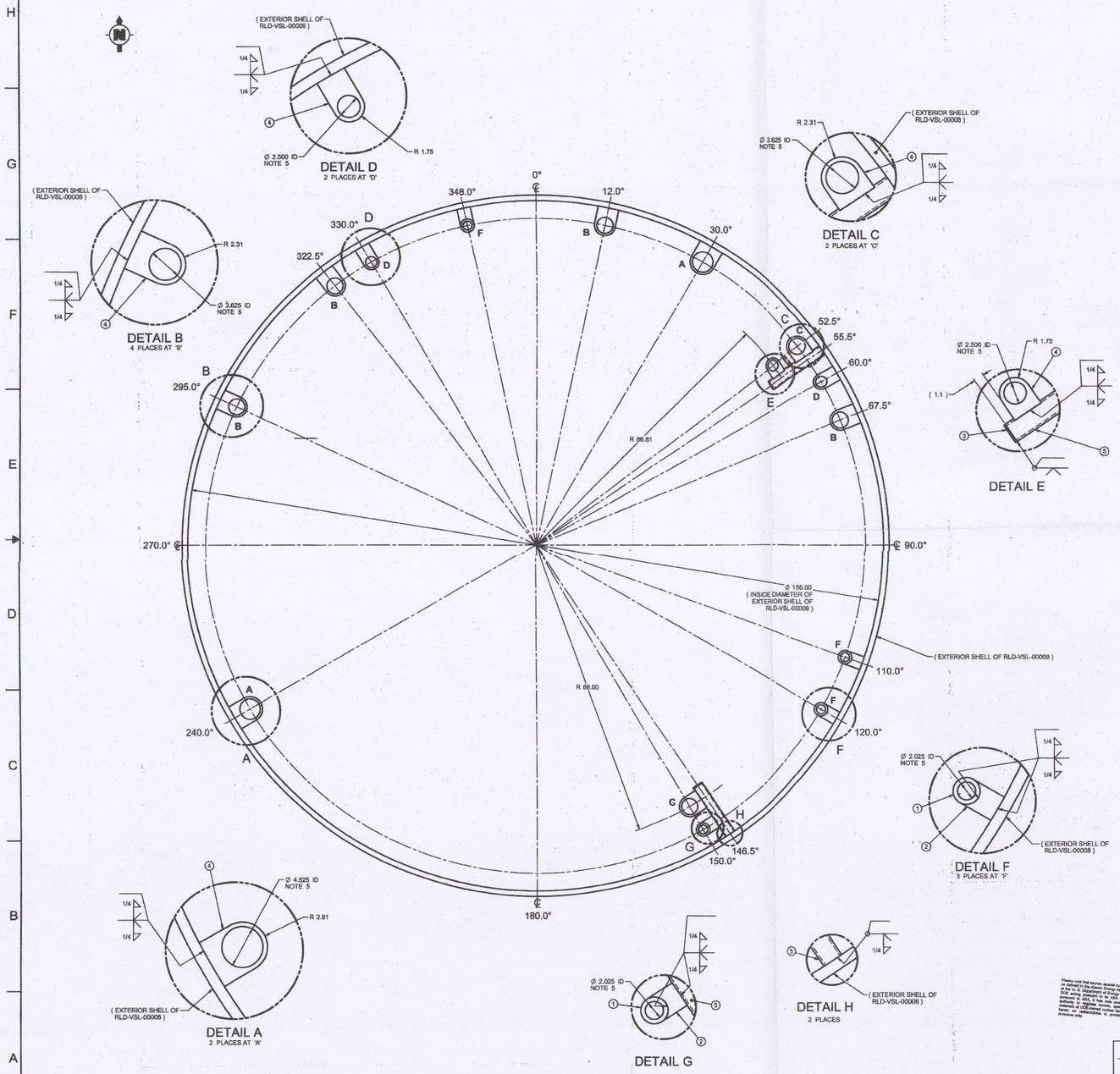

PLEASE NOTE THAT SOURCE AND/OR SPECIAL NUCLEAR AND BYPRODUCT MATERIALS, AS DEFINED IN THE ATOMIC ENERGY ACT OF 1954 (AEA), ARE REGULATED AT THE U.S. DEPARTMENT OF ENERGY (DOE) FACILITIES EXCLUSIVELY BY THE DOE ACTING PURSUANT TO ITS AEA AUTHORITY. THE DOE ASSERTS THAT PURSUANT TO THE AEA, IT HAS SOLE AND EXCLUSIVE RESPONSIBILITY AND AUTHORITY TO REGULATE SOURCE, SPECIAL NUCLEAR, AND BYPRODUCT MATERIALS AT DOE-OWNED NUCLEAR FACILITIES. INFORMATION CONTAINED HEREIN ON RADIONUCLIDES IS PROVIDED FOR PROCESS DESCRIPTION PURPOSES ONLY.

GENERAL NOTES

1. DIMENSIONING AND TOLERANCING PER ASME Y14.5
2. THIS DRAWING PROVIDES INFORMATION TO PLACE ADDITIONAL SEISMIC GUIDE/SUPPORT STRUCTURE INSIDE OF HLW VESSEL RLD-VSL-00008 FOR ADDED INTERNAL STRUCTURAL SUPPORT.
3. WELDING AND NDE SHALL BE IN ACCORDANCE WITH VESSEL SPECIFICATION 24590-WTP-3PS-MV00-T0001.
4. CONTENTS OF THIS DOCUMENT ARE DANGEROUS WASTE PERMIT AFFECTING.
5. GUIDE RINGS ARE BORED TO MAINTAIN 1/16" (.063") MAX GAP ON A SIDE FOR 1/8" (.125") MAXIMUM DIAMETRAL CLEARANCE WITH PIPE.
6. MATERIALS ARE PER THE FOLLOWING MECHANICAL SYSTEMS DATA SHEET: 24590-HLW-MVD-RLD-00007, AND ADDITIONALLY, BAR STOCK IS PER SA 479 TYPE 316 (.03% CARBON MAX).

REFERENCE DRAWINGS

DWG NO	TITLE
24590-HLW-MV-RLD-00004	EQUIPMENT ASSEMBLY ACIDIC WASTE VESSEL RLD-VSL-00008
24590-HLW-MV-RLD-00019	RLD-VSL-00008 LOW SEISMIC GUIDE/SUPPORT (2'-0" ABOVE TAN LINE OF BOT HEAD
24590-HLW-MV-RLD-00020	RLD-VSL-00008 LOW WIDE WALL MTD SEISMIC GUIDE/SPRTS, 9'-9" ABOVE TAN LINE OF BOT HEAD
24590-HLW-MV-RLD-00021	RLD-VSL-00008 UPPER GUIDE/SUPPORT (6'-3" ABOVE TAN LINE OF BOTTOM HEAD
24590-HLW-MV-RLD-00024	RLD-VSL-00008 MID-SPAN SEISMIC GUIDE/SPRT, 4'-10" ABOVE TAN LINE OF BOT HEAD

REV	DESCRIPTION	ORG	CHKD	RVWD	APVD	DATE
0	ISSUED FOR PURCHASE	AJP	SKD	AP	[illegible]	7/7/09

REVISION HISTORY

Please note that source, special nuclear, and byproduct materials, as defined in the Atomic Energy Act of 1954 (AEA), are regulated at the U.S. Department of Energy (DOE) facilities exclusively by the DOE acting pursuant to its AEA authority. The DOE asserts that pursuant to the AEA, it has sole and exclusive authority to regulate its own source, special nuclear, and byproduct materials at DOE-owned nuclear facilities. Information contained herein on radionuclides is provided for process description purposes only.

ISSUED BY RPP-WTP PDC

PROJECT No.	24590
SITE	HANFORD
AREA	200E
BUILDING No.	30

	BY	DATE
ORIGINATOR	[illegible]	9-8-2009
CHECKER	[illegible]	9-9-2009
APPROVER	[illegible]	9/11/09
REVIEWER	[illegible]	9/11/09

THIRD ANGLE PROJECTION

TOLERANCES	
.00	± .50"
FRACTION	± 1/16"
ANGLE	± 0°

CONTENT APPLICABLE TO ALARA? [X] YES [ ] NO
ACR NO. : 24590-WTP-ACR-M-03-008 REV : 2
SAFETY SCREEN REQUIRED? [ ] YES [X] NO E&NS INITIAL IF YES :

RIVER PROTECTION PROJECT
WASTE TREATMENT PLANT
2435 STEVENS CENTER PLACE
RICHLAND, WA 99354

CONTRACT No: DE-AC27-01RV14136

RLD-VSL-00008
UPPER SIDE WALL MOUNTED SEISMIC GUIDE/SUPPORTS, 7'-8" ABOVE TANGENT LINE OF BOTTOM HEAD

SCALE: NONE

24590-HLW-MV-RLD-00022 REV 0

E SIZE - 44x34
COMPUTER GENERATED - MANUAL DESIGN CHANGES NOT PERMITTED
WHEN REFERENCING DRAWING AND DWG NUMBERS IN DOCUMENTS, BE SURE TO INCLUDE DASHES BETWEEN ELEMENTS

09/08/2009 7:29 AM

R11121706

FORM E_MASTER 03/2003

ITEM	QTY	MATERIAL	DESCRIPTION
1	AR	SEE NOTE 7	1/2 (MIN) WALL X 1 1/2 LONG, ROUND BAR, GUIDE RING (NOTE 5)
2	AR	SEE NOTE 7	3/4 (MIN) X 3 (MIN) BAR, SPACER PLATE
3	AR	SEE NOTE 7	3" NPS SCHEDULE 80 SEAMLESS PIPE

PLEASE NOTE THAT SOURCE AND/OR SPECIAL NUCLEAR AND BYPRODUCT MATERIALS, AS DEFINED IN THE ATOMIC ENERGY ACT OF 1954 (AEA), ARE REGULATED AT THE U.S. DEPARTMENT OF ENERGY (DOE) FACILITIES EXCLUSIVELY BY THE DOE ACTING PURSUANT TO ITS AEA AUTHORITY. THE DOE ASSERTS THAT PURSUANT TO THE AEA, IT HAS SOLE AND EXCLUSIVE RESPONSIBILITY AND AUTHORITY TO REGULATE SOURCE, SPECIAL NUCLEAR, AND BYPRODUCT MATERIALS AT DOE-OWNED NUCLEAR FACILITIES. INFORMATION CONTAINED HEREIN ON RADIONUCLIDES IS PROVIDED FOR PROCESS DESCRIPTION PURPOSES ONLY.

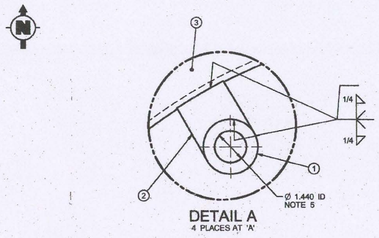

DETAIL A
4 PLACES AT 'A'

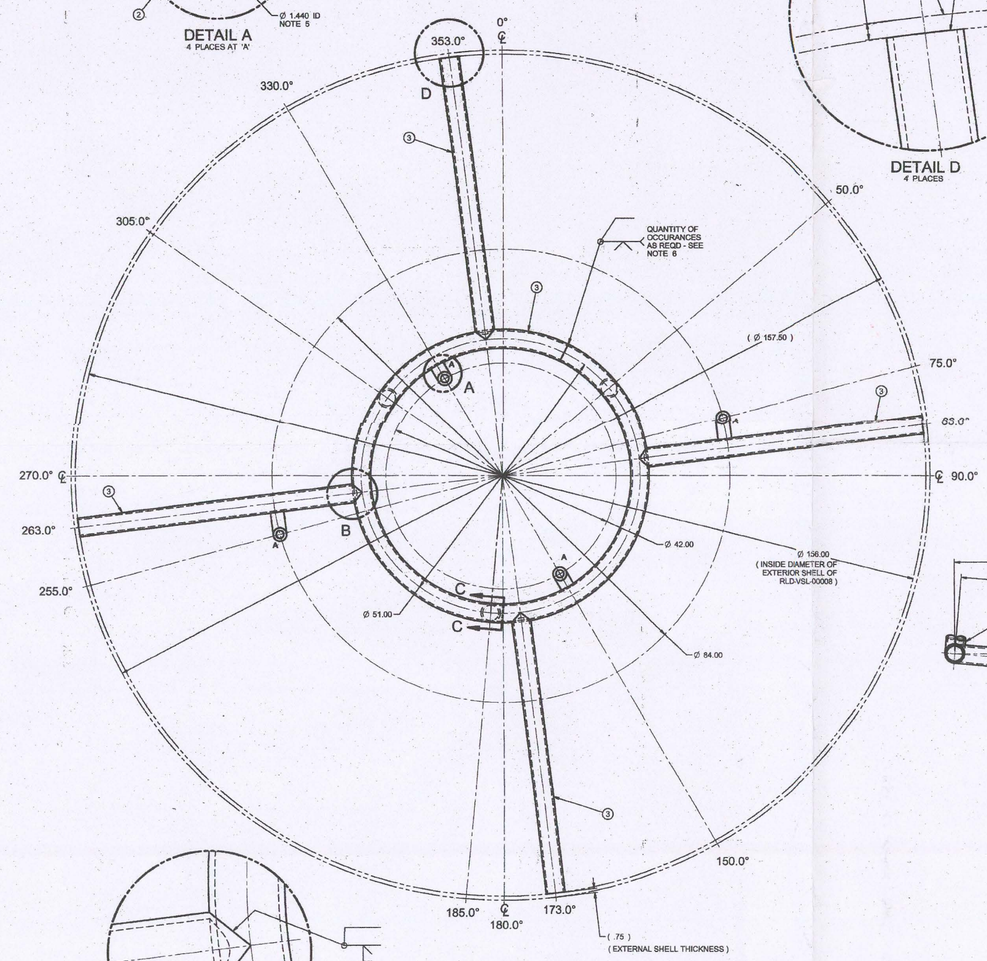

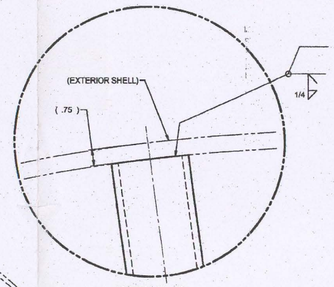

DETAIL D
4 PLACES

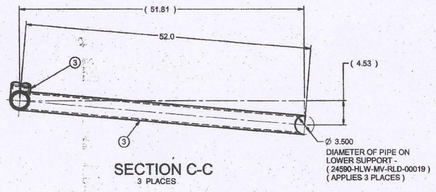

SECTION C-C
3 PLACES

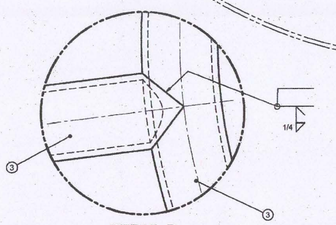

DETAIL B
7 PLACES

GENERAL NOTES

1. DIMENSIONING AND TOLERANCING PER ASME Y14.5
2. THIS DRAWING PROVIDES INFORMATION TO PLACE ADDITIONAL SEISMIC GUIDE/SUPPORT STRUCTURE INSIDE OF HLW VESSEL RLD-VSL-00008 FOR ADDED INTERNAL STRUCTURAL SUPPORT.
3. WELDING AND NDE SHALL BE IN ACCORDANCE WITH VESSEL SPECIFICATION 24590-WTP-3PS-MV00-T0001.
4. CONTENTS OF THIS DOCUMENT ARE DANGEROUS WASTE PERMIT AFFECTING.
5. GUIDE RINGS ARE BORED TO MAINTAIN 1/16" (.063") MAX GAP ON A SIDE FOR 1/8" (.125") MAXIMUM DIAMETRAL CLEARANCE WITH PIPE.
6. CENTER SUPPORT RING MAY BE FABRICATED IN AS MANY SECTIONS AS NEEDED.
7. MATERIALS ARE PER THE FOLLOWING MECHANICAL SYSTEMS DATA SHEET: 24590-HLW-MVD-RLD-00007, AND ADDITIONALLY, BAR STOCK IS PER SA 479 TYPE 316 (.03% CARBON MAX)

REFERENCE DRAWINGS	
DWG NO	TITLE
24590-HLW-MV-RLD-00004	EQUIPMENT ASSEMBLY PLANT WASH & DRAINS VESSEL RLD-VSL-00008
24590-HLW-MV-RLD-00019	RLD-VSL-00008 LOWER SEISMIC GUIDE/SUPPORT 0'-6" ABOVE TANGENT LINE OF BOTTOM HEAD
24590-HLW-MV-RLD-00020	RLD-VSL-00008 LOW SIDE WALL MTD SEISMIC GUIDE/SPPTS 0'-4" ABOVE TAN LINE OF BOT HEAD
24590-HLW-MV-RLD-00021	RLD-VSL-00008 UPPER GUIDE/SUPPORT 9'-3" ABOVE TAN LINE OF BOTTOM HEAD
24590-HLW-MV-RLD-00022	RLD-VSL-00008 UP SIDE WALL MTD SEISMIC GUIDE/SPPTS 7'-4" ABOVE TAN LINE OF BOT HEAD

Please note that source, special nuclear, and byproduct materials, as defined in the Atomic Energy Act of 1954 (AEA), are regulated at the U.S. Department of Energy (DOE) facilities exclusively by DOE acting pursuant to its AEA authority. DOE asserts that pursuant to the AEA, it has sole and exclusive responsibility and authority to regulate source, special nuclear, and byproduct materials at DOE-owned nuclear facilities. Information contained herein on radionuclides is provided for process description purposes only.

REV	DESCRIPTION	ORIG	CHKD	RVWD	APVD	DATE
0	ISSUED FOR PURCHASE	AJP	BKD			9/17/09

REVISION HISTORY

Q

ISSUED BY RPP-WTP PDC

SEAL STAMP

PROJECT No.	24590
SITE	HANFORD
AREA	200E
BUILDING No.	30

	BY	DATE
ORIGINATOR	A.J. Palmatier	7-8-2009
CHECKER	[illegible]	9-9-2009
APPROVER	[illegible]	9/17/09
REVIEWER	[illegible]	9/9/09

THIRD ANGLE PROJECTION

TOLERANCES	
.00	±.50°
FRACTION	± 1/16"
ANGLE	± 5°

CONTENT APPLICABLE TO ALARA? ☐ YES ☐ NO

ADR NO. 24590-WTP-ADR-M-03-008 REV: 2

SAFETY SCREEN REQUIRED? ☐ YES ☒ NO (SASS INITIAL IF YES)

SIZE - 44x34

COMPUTER GENERATED - MANUAL DESIGN CHANGES NOT PERMITTED

RIVER PROTECTION PROJECT
WASTE TREATMENT PLANT
2435 STEVENS CENTER PLACE
RICHLAND, WA 99354

CONTRACT No: DE-AC27-01RV14136

RLD-VSL-00008
MID-SPAN SEISMIC GUIDE/SUPPORT
4'-10" ABOVE TANGENT LINE OF BOTTOM HEAD

SCALE: NONE

24590-HLW-MV-RLD-00024

REV 0

WHEN REFERENCING DRAWING AND DW NUMBERS IN DOCUMENTS, BE SURE TO INCLUDE DASHES BETWEEN ELEMENTS

03/04/2003 7:23 AM

R11121789

FORM E_MASTER 03/2003