This document was too large to scan as a single document. It has been divided into smaller sections.

Section 3 of 13

Document Information			
Document #	RPP-24544	Revision	1D
Title	DEMONSTRATION BULK VITRIFICATION SYS INDEPENDENT QUALIFIED REGISTERED PROFESSIONAL ENGINEER (IQRPE & RCRA DESIGN REVIEW PACKAGE		
Date	05/11/2006		
Originator	SHUFORD DH	ORG CO	CH2M
Recipient		Recipient Co.	
References	ECN-723118-R5, RPP-24544-R0, RPP-24544-R1, RPP-24544-R1A, RPP-24544-R1B, RPP-24544-R1C, EDT-821657, ECN-723118-R0, ECN-723118-R1, ECN-723118-R3, ECN-723118-R4		
Keywords	SUPPL TREATMENT		
Projects			

145579-D-CA-056

0069792
3/12

DMJM H&N | AECOM

CALCULATION COVER SHEET

Date: 03-25-2006

Calculation No: 145579-D-CA-056
Calculation Title: DBVS OGTS Bypass System Thermal Hydraulics Analysis
Project No. & Title: 145579 - Demonstration Bulk Vitrification System
Design Verification Required: ☒ Yes ☐ No
Calculation Type: ☐ Scoping ☐ Preliminary ☒ Final
☐ Superseded by Calculation No: _____ ☐ Voided

ORIGINAL AND REVISED CALCULATION/ANALYSIS APPROVAL

	Rev. A Printed Name/Signature/Initials/Date	Rev. 0 Printed Name/Signature/Initials/Date	Rev. 1 Printed Name/Signature/Initials/Date
Originator:	John Irwin	John Irwin	John Irwin 3/25/06
Checked By:	Jack McConwell	Jack McConwell	Jack McConwell 3/26/06
Approved By:			Kurt McCracken 3/27/06
Other:	Kurt McCracken	Kurt McCracken	

AFFECTED DOCUMENTS

Document Number	Document Title	Rev. Number	Responsible Discipline Lead Initials

RECORD OF REVISION

Rev.	Reason for Revision
A	Initial Release
0	Comment Incorporation
1	Comment Incorporation

ATTACHMENTS

Attachment #	Title	Total Pages
1	DBVS OGTS Bypass System Drawings	17
2	AFT Arrow Model Input and Output Files	46
3	OGTS Bypass System Fluid Flow Model Input Data	22
4	Equipment Data Sheets	8
5	ASHRAE Fundamentals Duct Fitting Loss Coefficients	32
	Total Calculation Page Count	138

Calculation No 145579-D-CA-056	**ORIGINATOR:** John Irwin 03-25-2006
Rev. No. : 1	
Calculation Title : DBVS OGTS Bypass System Thermal Hydraulics Analysis	**CHECKER:** Jack McConwell 3-26-06

This page intentionally left blank.

Calculation No 145579-D-CA-056	**ORIGINATOR:** John Irwin 03-25-2006
Rev. No. : 1	**CHECKER:** Jack McConwell 3-26-06
Calculation Title : DBVS OGTS Bypass System Thermal Hydraulics Analysis	

1.0 INTRODUCTION

The Demonstration Bulk Vitrification System (DBVS) will be used to demonstrate the bulk verification process on low activity tank waste. Waste is retrieved by a Single-Shell Tank Waste Retrieval System and then delivered in batches to the DBVS Waste Staging Tanks. The liquid waste is dried and then transferred into a process system including an in container vitrification station (ICV box). The ICV box is ventilated by an Off Gas Treatment system (OGTS). The OGTS has an emergency backup exhaust system, the OGTS Bypass system, which is connected to the ICV box through a piping connection on the main OGTS ductwork. The OGTS bypass system consists of HEPA filters, fans, air bypass filters, valves, heaters and piping. When required following a loss of normal flow to the ICV Box, the OGTS bypass system is automatically valved in, to provide a negative pressure at the ICV box and transfers the process gas to a HEPA filter and finally into the main OGTS exhaust stack.

1.1 Purpose

This calculation provides a thermal hydraulic assessment of the OGTS Bypass System. The OGTS bypass system air flow rates, system pressure losses and temperatures are determined during its expected normal operating conditions.

1.2 Scope

The scope of the calculation is limited to the determination of the system flow rates, pressure losses and temperature in the piping and components from the ICV box to the OGTS exhaust stack. This analysis will determine the fan/system operating point; assess the operating pressure in the ICV box (insuring a negative pressure is maintained in the ICV Box) and predict the temperature of the piping from the ICV box to the OGTS exhaust stack for normal flow conditions as specified in Section 2.1.

2.0 Basis

2.1 Design Inputs

1. Component and pipe lengths are derived from the project drawings listed in the reference section and contained in Attachment 1 of this report. The Bypass system ducting is schedule 10S (8 inch and larger) and schedule 40S (6 inch and smaller), stainless steel pipe, A312 type 316L with surface roughness as specified in Crane 1988.

Calculation No 145579-D-CA-056	**ORIGINATOR**: John Irwin 03-25-2006
Rev. No. : 1	
Calculation Title : DBVS OGTS Bypass System Thermal Hydraulics Analysis	**CHECKER:** Jack McConwell 3-26-06

2. The process conditions for the ICV box are as defined on the DBVS process flow diagram, F-145579-00-A-0021. The ICV Off-gas Exit Temperature is listed as 875 °F.

3. The maximum ambient temperature 115°F, HNF-SD-GN-ER-501.

4. A nominal air flow of 750 acfm was specified based upon a preliminary engineering assessment of commercially available fans suitable for the OGTS Bypass system

5. All isolation and control valves were assumed to be Keystone butterfly valves, with the Cv flow parameter as provided by the manufacturer (See Attachment 4) for each size of valve and its relative open position percentage.

6. The HEPA filters were assumed to be Flanders filters with pressure drops provided by the manufacturer for similar applications (See Attachment 4). Clean and dirty filter pressure drops were utilized for the various parametric models.

7. The fan characteristics were as provided by the manufacturer for a New York Blower Company Model 1508 (See Attachment 4).

8. The pressure drop characteristics of the Back draft damper were as provided by industry test data (See Attachment 4).

9. The flow loss coefficients for the standard piping components of the system were determined using the ASHRAE Fundamentals (Attachment 5). The ASHRAE duct fitting flow loss tables were utilized to calculate these loss coefficients for standard fittings, including elbows, wyes, transitions and miscellaneous fittings.

10. The site elevation at the 200W area location for the DBVS of 662 feet was utilized to determine the local atmospheric pressure.

11. The flow loss coefficients were added to the pipe loss model within the AFT Arrow model for each pipe segment as required by the physical layout.

12. A main input to the flow model was the heat transfer boundary conditions. The AFT Arrow model requires an input for the external heat transfer coefficient for the pipe system being analyzed. The external heat transfer coefficients were calculated from standard correlations found in the Holman, 1990. The simplified McAdams air correlations, found in Holman, for natural convection from a

Calculation No 145579-D-CA-056	**ORIGINATOR:** John Irwin 03-25-2006
Rev. No. : 1	
Calculation Title : DBVS OGTS Bypass System Thermal Hydraulics Analysis	**CHECKER:** Jack McConwell 3-26-06

horizontal cylinder was used. In addition, heat transfer by thermal radiation from the pipe external surface was accounted for by using methods defined by Holman, 1990. A combined convection and thermal radiation heat transfer coefficient was an input parameter for the AFT Arrow flow model. The calculation of the external heat transfer coefficient is contained in Attachment 3.

13. The pipe internal convection coefficient was calculated by AFT Arrow using the standard Dittus-Boelter correlation for forced flow. The thermal properties of stainless steel were provided for by the AFT Arrow database to calculate the conductive heat transfer through the pipe wall.

14. The ICV box and the OGTS bypass system were given an arbitrary elevation of 0 feet relative to the project site elevation. Elevation changes and thus air density changes have third order effects on the results of the analysis, and therefore were neglected.

2.2 Assumptions

1. The process fluid was assumed to be dry air with temperature dependent properties that are accounted for by the fluid flow modeling software database of properties, including non-ideal gas behavior.

2. For the condition where flow from the ICV box is through the Bypass system, a nominal mass flow split of 60% through the air inlet bleed path and 40% through the ICV box is to be utilized in the flow model. This will configuration will match the normal OGTS flow through the ICV and is anticipated to produce a vacuum at the ICV box within its normal operating range.

3. Worst case ambient conditions were assumed for conservative prediction of the heat loss from the bypass piping. An ambient temperature of 115 °F with no wind was assumed for all external heat transfer effects.

4. The thermal emissivity of 0.6 was assumed for the stainless steel piping, no piping insulation was assumed. The emissivity chosen is conservative with respect to "as received" or oxidized stainless steel piping typically used in construction (Irwin 2000).

5. The HEPA filter pressure drops for dirty filters was assumed to be twice the value of clean filters, for example, the main HEPA filter element has a clean filter

Calculation No 145579-D-CA-056	**ORIGINATOR:** John Irwin 03-25-2006
Rev. No. : 1	
Calculation Title : DBVS OGTS Bypass System Thermal Hydraulics Analysis	**CHECKER:** Jack McConwell 3-26-06

pressure drop of 1 inch w.c,, the dirty filter pressure drop was assumed to be 2 inches w.c.

6. The ICV air inlet was assumed to be 60% open screen with a rectangular right angle rain cap. The flow loss of this component was modeled using ASHRAE flow loss tables.

3.0 References

1. AFT Arrow Compressible Pipe Flow Modeling, Users Guide, Version 3.0, Applied Flow Technology, 2005.

2. ASHRAE Fundamentals, 2005, American Society of Heating, Refrigerating and Air conditioning Engineers, Inc. Atlanta, GA.

3. DBVS Drawing F-145579-00-A-0021, Rev. 0J, "Full DBVS Feed Preparation & Melt Process Flow Diagram."

4. DBVS Drawing F-145579-00-D-0002, Rev. J, "Bulk Vitrification Site Layout Plan."

5. DBVS Drawing F-145579-00-D-0008, Rev. D, "Bulk Vitrification Off-Gas and Elec. Trailers GA."

6. DBVS Drawing F-145579-35-A-0100, Rev. P, "Bulk Vitrification ICV Box P&ID."

7. DBVS Drawing F-145579-36-A-0108, Rev. F, "Bulk Vitrification OGTS Bypass P&ID."

8. DBVS Drawing F-145579-36-V-0001, Rev. H, "Bulk Vitrification Off-Gas Treatment Plot Plan."

9. DBVS Drawing F-145579-36-V-0003, Rev. K, "Bulk Vitrification Off-Gas Treatment Melt & Dryer Lower Plan"

10. DBVS Drawing F-145579-36-V-0006, Rev. H, "Bulk Vitrification Off-Gas Treatment Wet Scrubber Skid Plan."

Calculation No 145579-D-CA-056	**ORIGINATOR:** John Irwin 03-25-2006
Rev. No. : 1	**CHECKER:** Jack McConwell 3-26-06
Calculation Title : DBVS OGTS Bypass System Thermal Hydraulics Analysis	

11. DBVS Drawing F-145579-36-V-0007, Rev. H, "Bulk Vitrification Off-Gas Treatment Scrub & Stack Plan."

12. DBVS Drawing F-145579-36-V-0028, Rev. K, "Bulk Vitrification Off-Gas Treatment Melt & Dryer Section 'C'."

13. DBVS Drawing F-145579-36-V-0029, Rev. J, "Bulk Vitrification Off-Gas Treatment Melt & Dryer Section 'D'."

14. DBVS Drawing F-145579-36-V-0030, Rev. J, "Bulk Vitrification Off-Gas Treatment Melt & Dryer Section 'E'."

15. DBVS Drawing F-145579-36-V-0031, Rev. G, "Bulk Vitrification Off-Gas Treatment Wet Scrubber Skid Sections."

16. DBVS Drawing F-145579-36-V-0033, Rev. H, "Bulk Vitrification Off-Gas Treatment Scrub & Stack Section."

17. DBVS Drawing F-145579-36-V-0034, Rev. H, "Bulk Vitrification Off-Gas Treatment Scrub & Stack Sections."

18. Crane, Flow of Fluids Through Valves, Fittings, and Pipe, Technical Paper No. 410, 1988, Crane.

19. HNF-SD-GN-ER-501, Natural Phenomena Hazards Hanford Site Washington, Rev. 1B, Fluor Hanford.

20. Holman, J. P., Heat Transfer, 1990, McGraw Hill.

21. Idelchik, I. E., Handbook of Hydraulic Resistance, 1996, Begell House Publishing.

22. Irwin, J.J., Thermal Analysis Methods for Safety Analysis Reports for Packaging, WHC-SD-TP-RPT-005, Rev. 1, 2000, Fluor Hanford Inc.

4.0 Methods

The OGTS bypass system thermal-hydraulic calculations are performed using AFT Arrow Version 3.0, with inputs provided from the MS Excel spreadsheets

Calculation No 145579-D-CA-056	**ORIGINATOR:** John Irwin 03-25-2006
Rev. No. : 1	
Calculation Title : DBVS OGTS Bypass System Thermal Hydraulics Analysis	**CHECKER:** Jack McConwell 3-26-06

(Attachment 3), manufacturer's data (Attachment 4) and selected ASHRAE Fundamentals duct fitting flow loss tables (Attachment 5).

The AFT Arrow program was utilized for analyzing the one-dimensional compressible flow in the OGTS Bypass system piping network. Temperature dependent thermo-physical properties of prescribed fluids are accounted for in the AFT Arrow program's database. Non-ideal gas effects can be accounted for in AFT Arrow by the use of a suitable thermodynamic equation of state. AFT Arrow utilizes the Redlich-Kwong equation of state to account for compressibility effects. The AFT Arrow program only models steady state conditions.

The cases analyzed by the AFT Arrow model are listed in Table 1 for the selected fan case. The major consideration is the operating pressure drops of the clean and dirty filters. Clean filter pressure drops are as specified by the filter vendor per data in Attachment 4. The dirty filter pressure drops are based upon past Hanford experience at twice the as received filter pressure drop.

Table 1. Bypass System Selected Fan Cases.

Case No.	ICV Box HEPA Filter (35-N02-010) Condition	Bypass HEPA Filter (36-N02-131/132) Condition	Bypass Inlet Bleed Filter (36-N02-134) Condition	ICV/Inlet Bleed Mass Flow Ratio %	Iso Valve Position (HV-901/-902) % Open
1	Clean	Clean	Clean	40/60	100
2	Clean	Clean	Clean	0/100	0
3	Dirty	Dirty	Dirty	40/60	100
4	Dirty	Dirty	Dirty	0/100	0

The second consideration for the parametric cases was whether the system was in standby, i.e. no flow from the ICV box to the Bypass system but flow through the Bypass inlet bleed filter. The initial case was for flow both through the ICV Box, with the main OGTS isolated, and flow through the Bypass inlet bleed filter with all HEPA filters having their clean pressure drops. The Bypass inlet bleed filter flow was set to achieve a nominal 60/40 mass flow split between the inlet bleed flow and the ICV box flow.

AFT Arrow has been previously verified and validated on computer #DMJMH+N 102514. MS Excel is a general purpose spreadsheet program.

Calculation No 145579-D-CA-056	**ORIGINATOR:** John Irwin 03-25-2006
Rev. No. : 1	
Calculation Title : DBVS OGTS Bypass System Thermal Hydraulics Analysis	**CHECKER:** Jack McConwell 3-26-06

5.0 Results and Conclusions

The AFT flow model results are categorized by the assumptions on the condition of the three sets of HEPA filters (ICV inlet HEPA, Bypass system main HEPA and Bypass system inlet bleed HEPA) in the system and the assumption on the flow split between the main bypass flow from the ICV box and the flow through the inlet bleed filter. The HEPA filters are defined by the condition of "clean", i.e. the manufacturer's stated pressure drop for new filter elements, or "dirty", the maximum expected pressure drop during operation.

5.1 Results for the Selected Fan Cases

For a nominal flow of 750 ACFM at the fan and an 8 inch main bypass line with 875 °F ICV outlet temperature, a fan was selected to achieve this flow rate with a static head capability of approximately 15 inches w.c. A NYB fan, model number 1508 was determined to be acceptable for this application. An evaluation of the selected fan was performed. The following results (Tables 2, 3, and 4) were determined by the AFT Arrow flow model.

Table 2. ICV Box Pressure with the Bypass System.

Case No.	Iso Valve Position (HV-901/-902) % Open	ICV Plenum Pressure Inches w.c.
1	100	-5.4
2	0	NA
3	100	-5.3
4	0	NA

Note:
1) Inlet bleed valve position set to achieve a nominal 60% of full fan flow through the inlet bleed filter when the main bypass line is open to the ICV box.

Calculation No 145579-D-CA-056	**ORIGINATOR:** John Irwin 03-25-2006
Rev. No. : 1	
Calculation Title : DBVS OGTS Bypass System Thermal Hydraulics Analysis	**CHECKER:** Jack McConwell 3-26-06

Table 3. Bypass System Air Flows and Fan Conditions.

Case No.	ICV Flow[1] ACFM	Inlet Bleed Flow ACFM	Fan dP Inches w.c.	Fan HP @ 67% Efficiency[2] HP	Pipe Flow Velocity[3] fpm
1	344	517	13.99	3.2	617
2	0	676	15.76	2.6	807
3	277	428	14.25	3.0	582
4	0	635	15.79	2.4	758

Note:
1) Flow is at the Inlet HEPA filter, 36-NO2-010.
2) A nominal fan efficiency of 67% was assumed based upon vendor data (attachment 4).
3) Pipe Flow Velocity is the minimum velocity within the OGTS Bypass line.

Table 4. Bypass System Temperatures.

Case No.	ICV Outlet Temp °F	HEPA Filter (36-D58-138) Inlet Temp °F	HT Area[1] Ratio
1	875	175	1
2	NA	115	1
3	875	169	1
4	NA	115	1

Note:
1) A Heat Transfer Ratio of 1 means there are no fins on the pipe for enhanced cooling.

5.2 Conclusions for the Specified Fan Case

The selected fan, NYB fan model 1508 (Attachment 4), will be able to achieve the required flow rates through and pressure in the OGTS Bypass system. The expected temperatures at the OGTS Bypass HEPA filters are less than 250 °F and therefore acceptable. The throttled condition at the air inlet bleed valve, with a Cv value of 300 or approximately 45% open, is acceptable for this valve.

Calculation No 145579-D-CA-056	**ORIGINATOR:** John Irwin 03-25-2006
Rev. No. : 1	
Calculation Title : DBVS OGTS Bypass System Thermal Hydraulics Analysis	**CHECKER:** Jack McConwell 3-26-06

6.0 Calculations and Analyses

The AFT Arrow model, as shown in the figure, considers the process loop as follows:

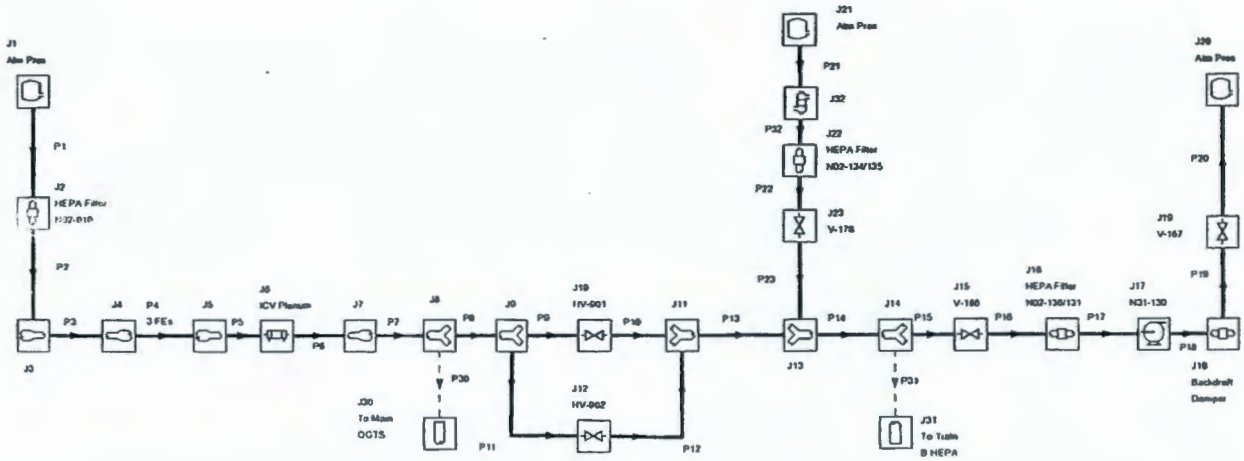

The drawings used to develop the AFT physical model are contained in Attachment 1. The AFT Arrow Input and Output Files for the various cases analyzed are in Attachment 2. Attachment 3 contains the flow coefficient and physical configuration input data for the AFT Arrow thermal hydraulic model. Attachment 4 contains the manufacturer's data for the butterfly valves, HEPA filters and fans that may be used in the OGTS Bypass system. Attachment 5 contains printouts from the ASHRAE Fundamentals, flow loss coefficient tables.

Calculation No 145579-D-CA-056	**ORIGINATOR:** John Irwin 03-25-2006
Rev. No. : 1	
Calculation Title : DBVS OGTS Bypass System Thermal Hydraulics Analysis	**CHECKER:** Jack McConwell 3-26-06

This page intentionally left blank.

DMJM H&N | AECOM

Attachment 1

Calculation No. 145579-D-CA-056	**ORIGINATOR:** John Irwin 03-25-2006
Rev. No. : 1	
Calculation Title : DBVS OGTS Bypass System Thermal Hydraulics Analysis	**CHECKER:** Jack McConwell 3-26-06

DBVS OGTS Bypass System Drawings

This page intentionally left blank.

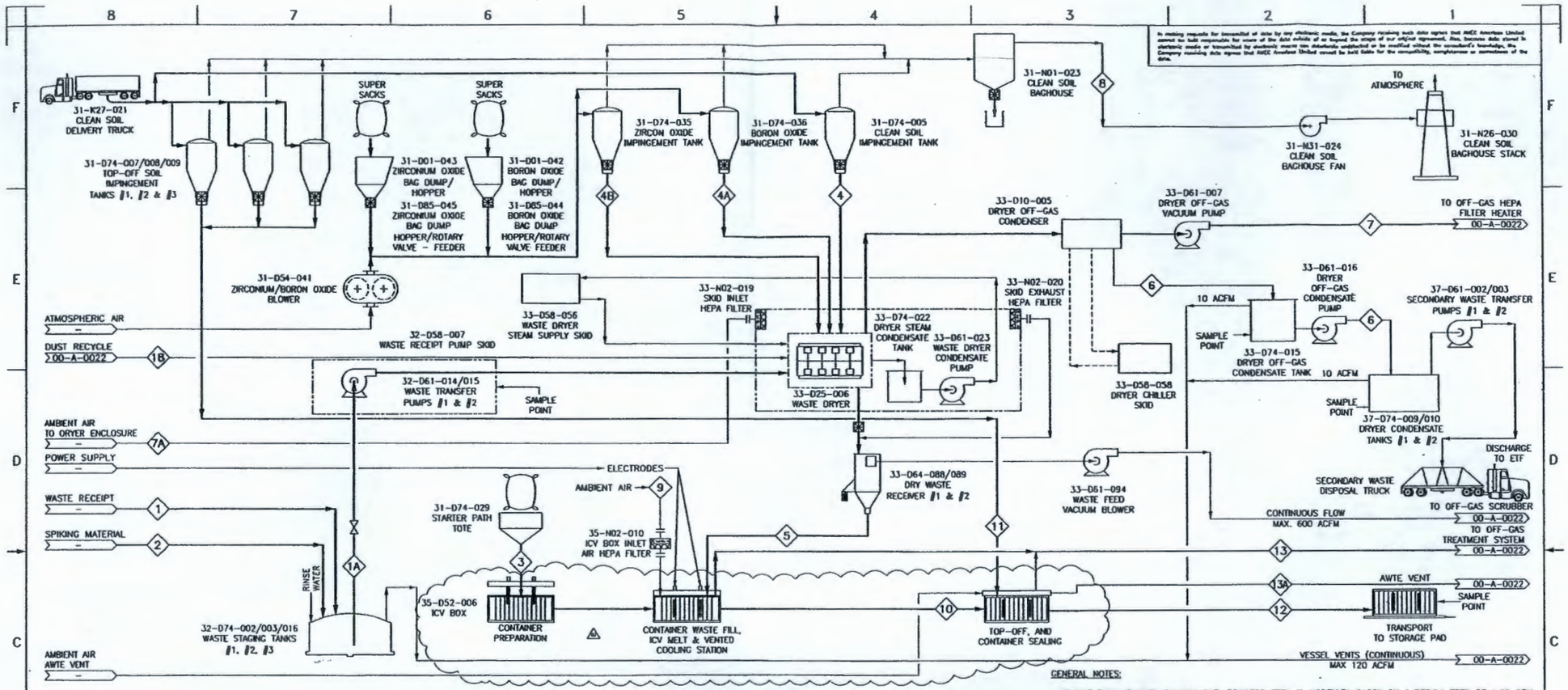

STREAM No.		1	2	1A	3	4	4A	4B	5	6	7	7A	8	9	10	11	12	13	13A	18
STREAM NAME	UNITS	WASTE RECEIPT	SPIKING FLOW	WASTE FLOW	STARTER PATHS	SOIL	B2O3 ADDITION	SiO2 ADDITION	ICV FEED	DRYER CONDENSATE	DRYER AIR	DRYER VENT AIR	OFF GAS AIR	ICV AIR	HOT ICV PRODUCT	TOP UP SOIL	COOLED ICV PRODUCT	ICV OFF GAS	AWTE VENT AIR	DUST RECYCLE
PHASE		LIQUID	LIQUID	LIQUID	SOLID	SOLID	SOLID	SOLID	SOLID	LIQUID	GAS	GAS	GAS	GAS	SOLID	SOLID	SOLID	GAS	GAS	SOLID
CONTINUOUS MASS FLOWRATE	lb/hr	703		703	16	329	23.3	32.8	614	480	13	2366	851	350	467	66	467	513	350	5
CONT. VOL. FLOW RATE (LIQ/GAS)	GPM/ACFM	1.09		1.09						0.98	4.2	600	199	80				280	80	
BATCH VOLUME	USG/ACF	1646		1646						1483	2827	7236000	2400000	962168				3382386	962168	
BATCH MASS	lb	17671		17671	3300	8272	586	820	15420	12055	6345	515859	171097	70323	93769	13315	93769	103209	70323	125
BATCH TRANSFER TIME	Hr	1.14		1.14	0.5	0.25	0.25	0.25	1	8	8	201	5	139	201	4	201	139	139	139
BATCH VOLUME FLOW	USGPM/ACFM	24		24						3.1	13	600	1000	115				406	115	
BATCH MASS FLOW	lb/hr	15458		15458	6600	33088	2344	3281	15420	1507	42	2366	4277	506	467	3329	467	743	506	7.2
DESIGN FACTOR	DIMENSIONLESS	1		1	1	1	1	1	1	1.1	1	1	1	1	1	1	1	1	1	1
DESIGN VOLUME FLOW	USGPM/ACFM	24		24						3.4	13	600	1000	115				406	115	
DESIGN MASS FLOW	lb/hr	15458		15458	6600	33088	2344	3281	15420	1658	42	2366	4277	506	467	3329	467	743	506	7.2
SpG		1.29		1.29	2.32	2.40	1.51	5.70	2.09	0.98	0.001	0.001	0.001	0.001	2.65	2.49	2.7	0.0005	0.001	2.54
SpG (BULK SOLIDS ONLY)					1.50	1.43	1.03	1.96	1.49						2.65	1.43	2.7			1.59
PRESSURE	in. WG	n/a		n/a	n/a	n/a	n/a	n/a	n/a	n/a	-80.67			-2.24	n/a	n/a	n/a	-2.46	-2.57	n/a
TEMPERATURE	°F	82		82	77	77	77	77	83	122	212	77	77	77	2372	77	122	875	77	572
H2O LIQUID	lb/hr	469.5		469.5	0.41	16.5			6.1	479.8										
H2O GAS	lb/hr																	6.5		
FEED Na	lb/hr	62.6		62.6	0.2	6.5			70						69.2		69.2	0.7		0.7
SO2 GAS	ppmV																	1231		
NOx GAS	ppmV																	110238		
HCl GAS	ppmV																	119		
137Cs	Ci/hr	1.5E+00	0.0E+00	1.5E+00	0.0E+00	0.0E+00	0.0E+00	0.0E+00	1.5E+00	0.0E+00	0.0E+00	0.0E+00	0.0E+00	0.0E+00	1.5E+00	0.0E+00	1.5E+00	1.5E-02	0.0E+00	1.5E-02
99Tc	Ci/hr	1.2E-02	0.0E+00	1.2E-02	0.0E+00	0.0E+00	0.0E+00	0.0E+00	1.2E-02	0.0E+00	0.0E+00	0.0E+00	0.0E+00	0.0E+00	1.2E-02	0.0E+00	1.2E-02	8.2E-04	0.0E+00	6.2E-04
TRU	Ci/hr	9.0E-04	0.0E+00	9.0E-04	0.0E+00	0.0E+00	0.0E+00	0.0E+00	9.0E-04	0.0E+00	0.0E+00	0.0E+00	0.0E+00	0.0E+00	9.0E-04	0.0E+00	9.0E-04	9.0E-08	0.0E+00	9.0E-08
129I	Ci/hr	2.3E-05	0.0E+00	2.3E-05	0.0E+00	0.0E+00	0.0E+00	0.0E+00	2.05E-05	2.05E-05	0.00E+00	0.0E+00	0.0E+00	0.0E+00	2.0E-06	0.0E+00	2.05E-06	1.84E-05	0.0E+00	1.84E-05

GENERAL NOTES:

1. SINGLE TRAIN FACILITY THROUGHPUT: PROCESS FEED IS MODELLED BASED ON A DESIGN FEED OF 1.09 GPM. A TOTAL OPERATING EFFICIENCY OF 70 % SHOULD BE APPLIED TO ACHIEVE A 0.76 GPM PRODUCTION RATE WITH A 20.0 WT % Na2O GLASS LOADING IN THE GLASS PRODUCT.
2. FLOW IN STREAM 2 IS VARIABLE; A TESTING MATRIX WILL DETERMINE THE AMOUNT AND COMPOSITION OF SPIKING MATERIAL TO BE ADDED IN THE INDIVIDUAL TESTS.
3. VALVES ARE ONLY SHOWN TO INDICATE PROCESS INTENT.
4. FEED DATA BASED ON SECTIONS 3.1.2.1.1.1 AND 3.1.2.1.1.2 IN RPP-17403 REV 2.
5. RADIONUCLIDE CONTENT WAS BASED ON TABLE 3-3 IN SECTION 3.1.2.1.1.3 OF RPP-17403 REV 2.

LINES LEGEND:

MAJOR PROCESS STREAM
MINOR PROCESS STREAM
INTERMITTENT FLOWS

Rev.	REVISION DESCRIPTION	Date	By	Chk'd	Approved Supervisor	Approved Eng Mgr
GJ	REMOVED PROPRIETARY BLOCK	13/SEP/05	JBM	JBM	FVG	FVG
GH	ISSUE FOR CKI APPROVAL AND 90% REPORT	18 MAY 05	SB	TH	MM	TH
GG	ISSUED FOR CLIENT APPROVAL & 90% REPORT	24 MAR 05	RMB	MC	MM	TH
GF	ISSUED FOR CLIENT APPROVAL & 90% REPORT	15 MAR 05	SB	MC	MM	TH
GE	ISSUED FOR CLIENT APPROVAL & 90% REPORT	17 FEB 05	SB	LSG	MM	TH
GD	ISSUED FOR CLIENT APPROVAL & 90% REPORT	14 FEB 05	SB	LSG	MM	TH
GC	ISSUED FOR CLIENT APPROVAL & 90% REPORT	21 JAN 05	SB	LSG	MM	TH
GB	GENERAL REVISIONS, ISSUED FOR CLIENT COMMENT	16 DEC 04	SB	LSG	MM	TH
GA	GENERAL REVISIONS, ISSUED FOR INTERNAL REVIEW	15 NOV 04	SB	LSG	MM	TH
B	FOR CONSTRUCTION	29 JUL 04	SB	LSG	MM	TH
C	FORMERLY F-143643-00-A-0021, FOR APPROVAL	26 JULY 04	SB	LSG	MM	TH
B	FINAL ISSUE	14 APR 04	SC	LSG	MM	TH
A	ISSUED FOR CLIENT COMMENT	10 MAR 04	SLC		MM	TH

F-145579-00-A-0021 OJ

amec

145579-FINAL DBVS DESIGN

U.S. DEPARTMENT OF ENERGY
Office of River Protection

FULL DBVS
FEED PREPARATION & MELT
PROCESS FLOW DIAGRAM

NAME

DRAWING TRACEABILITY LIST: DWG NO | TITLE

REFERENCES: REF NUMBER | TITLE | NEXT USED ON

REVISIONS

SIZE F | SCALE NTS

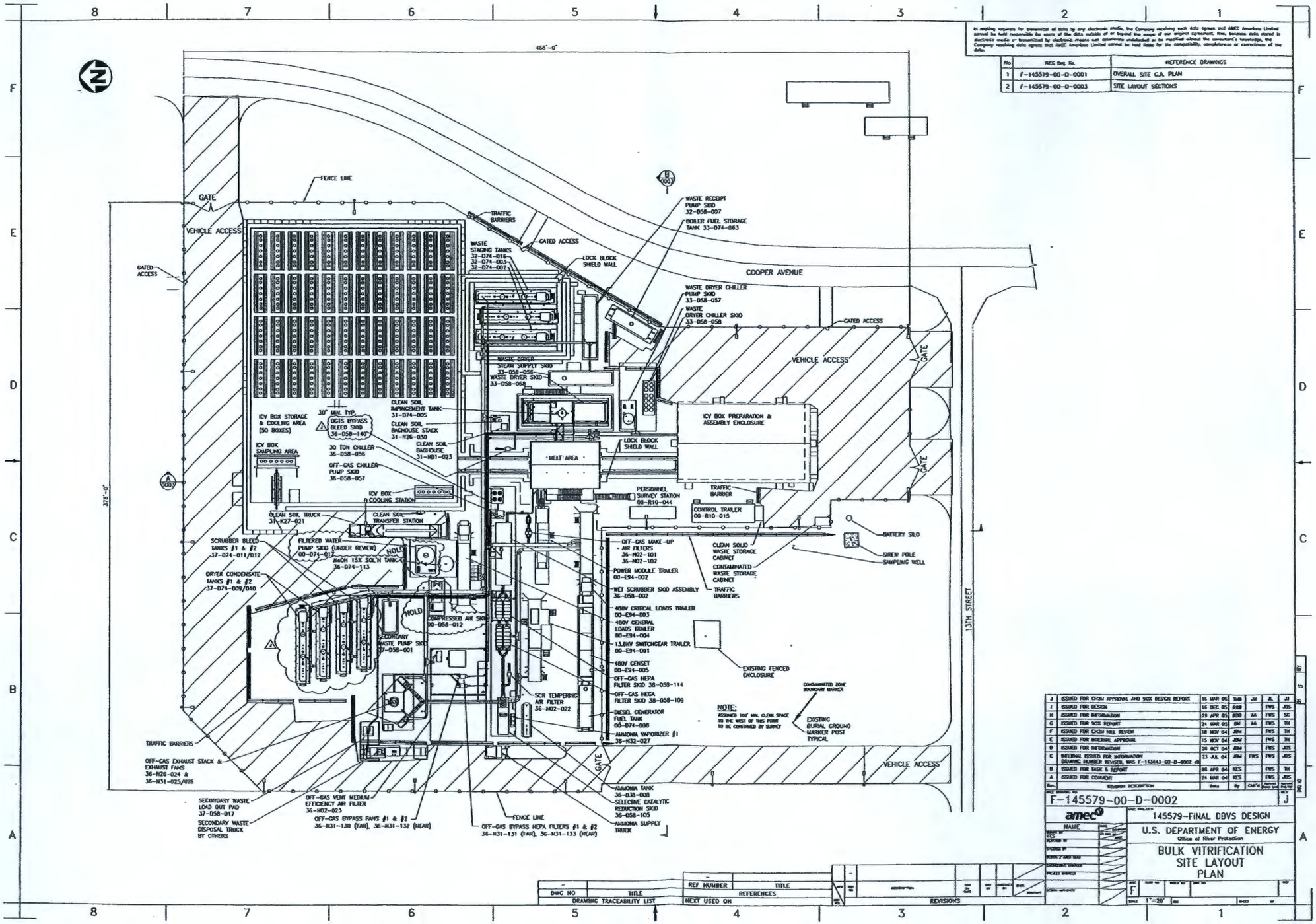

No.	AMEC Dwg. No.	REFERENCE DRAWINGS
1	F-145579-00-D-0001	OVERALL SITE G.A. PLAN
2	F-145579-00-D-0003	SITE LAYOUT SECTIONS

Rev.	Revision Description	Date	By	Chk'd	Appr'd	Appr'd Date
J	ISSUED FOR CHCM APPROVAL AND 90% DESIGN REPORT	16 MAR 05	THB	JM	JL	JJ
I	ISSUED FOR DESIGN	16 DEC 05	RKB		FWS	JDS
H	ISSUED FOR INFORMATION	29 APR 05	RDB	AA	FWS	SC
G	ISSUED FOR 90% REPORT	24 MAR 05	BM	AA	FWS	TH
F	ISSUED FOR CHCM INTL REVIEW	18 NOV 04	JBM		FWS	TH
E	ISSUED FOR INTERNAL APPROVAL	15 NOV 04	JBM		FWS	TH
D	ISSUED FOR INFORMATION	28 OCT 04	JBM		FWS	JDS
C	MATERIAL ISSUED FOR INFORMATION DRAWING NUMBER REVISED, WAS F-143643-00-D-0002 r0	23 JUL 04	JBM	FWS	FWS	JDS
B	ISSUED FOR TASK 6 REPORT	08 APR 04	NES		FWS	TH
A	ISSUED FOR COMMENT	24 MAR 04	NES		FWS	JDS

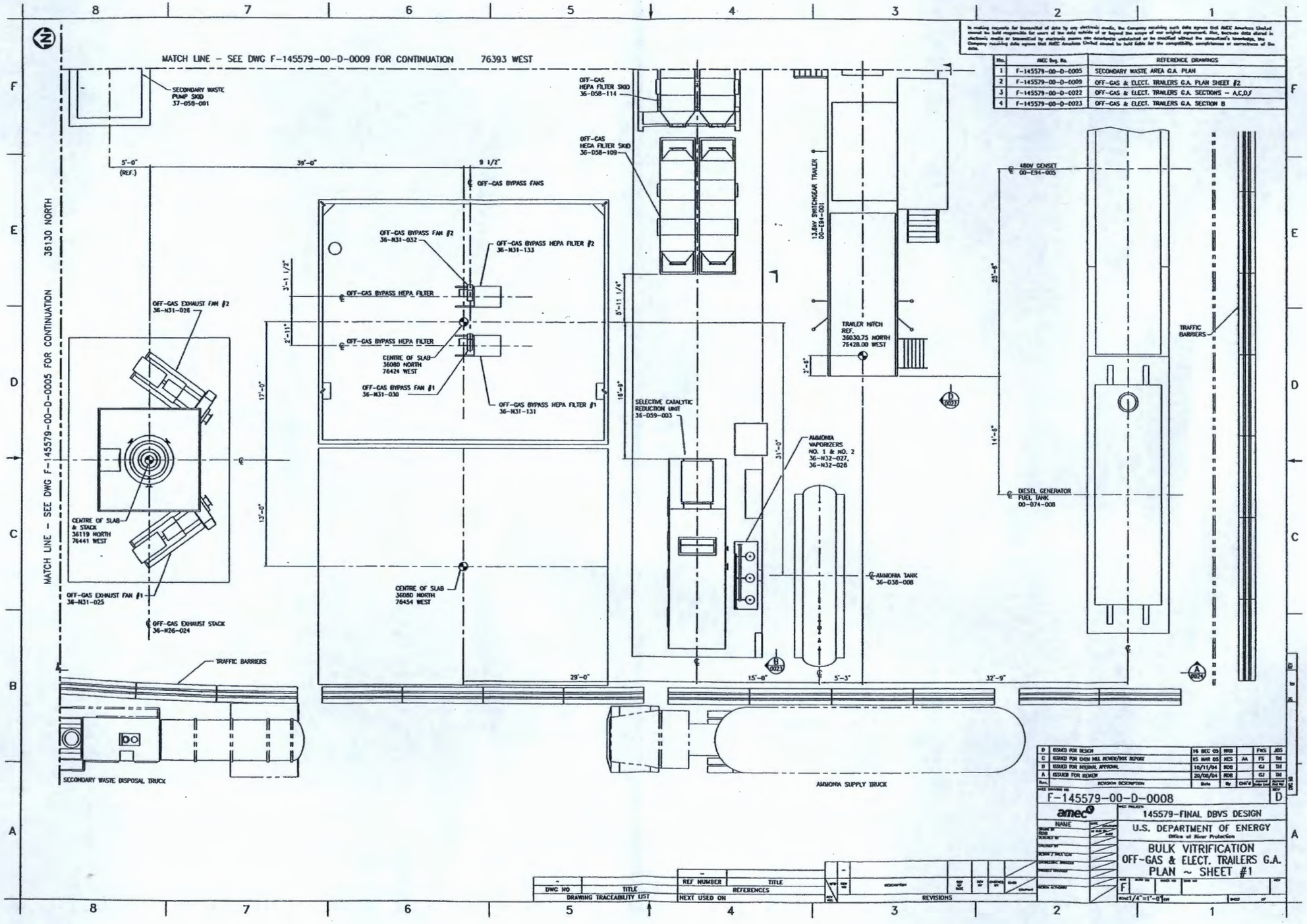

No.	AMEC Dwg. No.	REFERENCE DRAWINGS
1	F-145579-00-D-0005	SECONDARY WASTE AREA G.A. PLAN
2	F-145579-00-D-0009	OFF-GAS & ELECT. TRAILERS G.A. PLAN SHEET #2
3	F-145579-00-D-0022	OFF-GAS & ELECT. TRAILERS G.A. SECTIONS - A,C,D,F
4	F-145579-00-D-0023	OFF-GAS & ELECT. TRAILERS G.A. SECTION B

Rev.	REVISION DESCRIPTION	Date	By	Chk'd	Approved Lead	Approved Proj. Mgr.
D	ISSUED FOR DESIGN	16 DEC 05	RRB		FWS	JBS
C	ISSUED FOR DBDH NEL REVIEW/DOE REPORT	15 AUG 05	KCS	AA	FS	TM
B	ISSUED FOR INTERNAL APPROVAL	10/11/04	RDB		GJ	TM
A	ISSUED FOR REVIEW	20/08/04	RDB		GJ	TM

A5-479

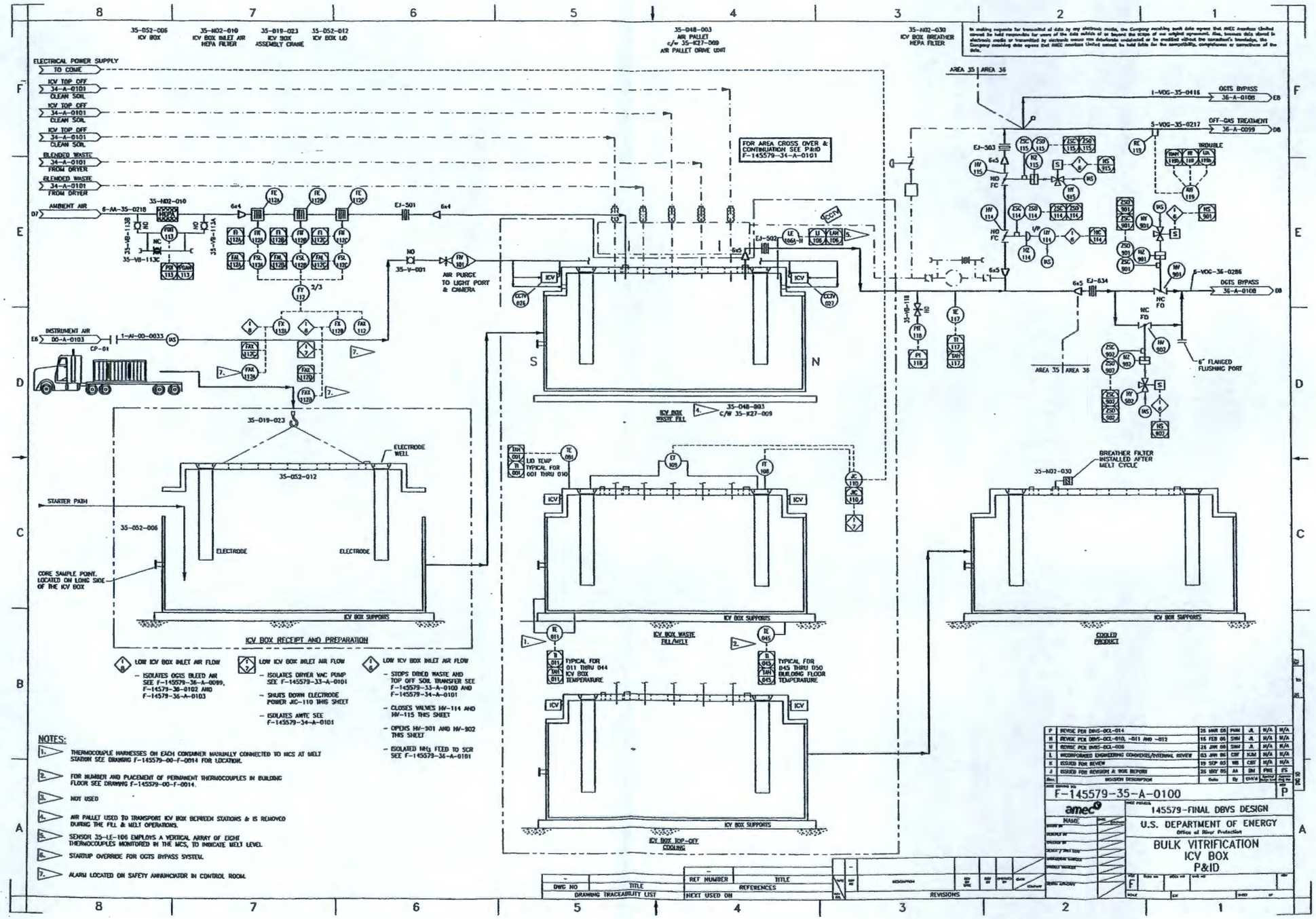
35-052-006 ICV BOX
35-N02-010 ICV BOX INLET AIR HEPA FILTER
35-019-023 ICV BOX ASSEMBLY CRANE
35-052-012 ICV BOX LID
35-048-003 AIR PALLET c/w 35-K27-009 AIR PALLET DRIVE UNIT
35-N02-030 ICV BOX BREATHER HEPA FILTER
ELECTRICAL POWER SUPPLY TO COMM
ICV TOP OFF 34-A-0101 CLEAN SOIL
BLENDED WASTE 34-A-0101 FROM DRYER
AMBIENT AIR
INSTRUMENT AIR
FOR AREA CROSS OVER & CONTINUATION SEE P&ID F-145579-34-A-0101
AIR PURGE TO LIGHT PORT & CAMERA
ICV BOX WASTE FILL
ICV BOX TOP-OFF COOLING
ICV BOX WASTE FILL/MELT
COOLED PRODUCT
OGTS BYPASS 36-A-0105
OFF-GAS TREATMENT 36-A-0099
OGTS BYPASS 36-A-0108
6" FLANGED FLUSHING PORT
BREATHER FILTER INSTALLED AFTER MELT CYCLE
ELECTRODE WELL
STARTER PATH
ELECTRODE
CORE SAMPLE POINT, LOCATED ON LONG SIDE OF THE ICV BOX
ICV BOX SUPPORTS
ICV BOX RECEIPT AND PREPARATION
LOW ICV BOX INLET AIR FLOW
- ISOLATES OGTS BLEED AIR SEE F-145579-36-A-0099, F-14579-36-0102 AND F-14579-36-A-0103
- ISOLATES DRYER VAC PUMP SEE F-145579-33-A-0101
- SHUTS DOWN ELECTRODE POWER JIC-110 THIS SHEET
- ISOLATES AMTE SEE F-145579-34-A-0101
- STOPS DRIED WASTE AND TOP OFF SOIL TRANSFER SEE F-145579-33-A-0100 AND F-145579-34-A-0101
- CLOSES VALVES HV-114 AND HV-115 THIS SHEET
- OPENS HV-901 AND HV-902 THIS SHEET
- ISOLATED NH3 FEED TO SCR SEE F-145579-36-A-0101
NOTES:
1. THERMOCOUPLE HARNESSES ON EACH CONTAINER MANUALLY CONNECTED TO MCS AT MELT STATION SEE DRAWING F-145579-00-F-0014 FOR LOCATION.
2. FOR NUMBER AND PLACEMENT OF PERMANENT THERMOCOUPLES IN BUILDING FLOOR SEE DRAWING F-145579-00-F-0014.
3. NOT USED
4. AIR PALLET USED TO TRANSPORT ICV BOX BETWEEN STATIONS & IS REMOVED DURING THE FILL & MELT OPERATIONS.
5. SENSOR 35-LE-106 EMPLOYS A VERTICAL ARRAY OF EIGHT THERMOCOUPLES MONITORED IN THE MCS, TO INDICATE MELT LEVEL.
6. STARTUP OVERRIDE FOR OGTS BYPASS SYSTEM.
7. ALARM LOCATED ON SAFETY ANNUNCIATOR IN CONTROL ROOM.
F-145579-35-A-0100
145579-FINAL DBVS DESIGN
U.S. DEPARTMENT OF ENERGY
BULK VITRIFICATION ICV BOX P&ID

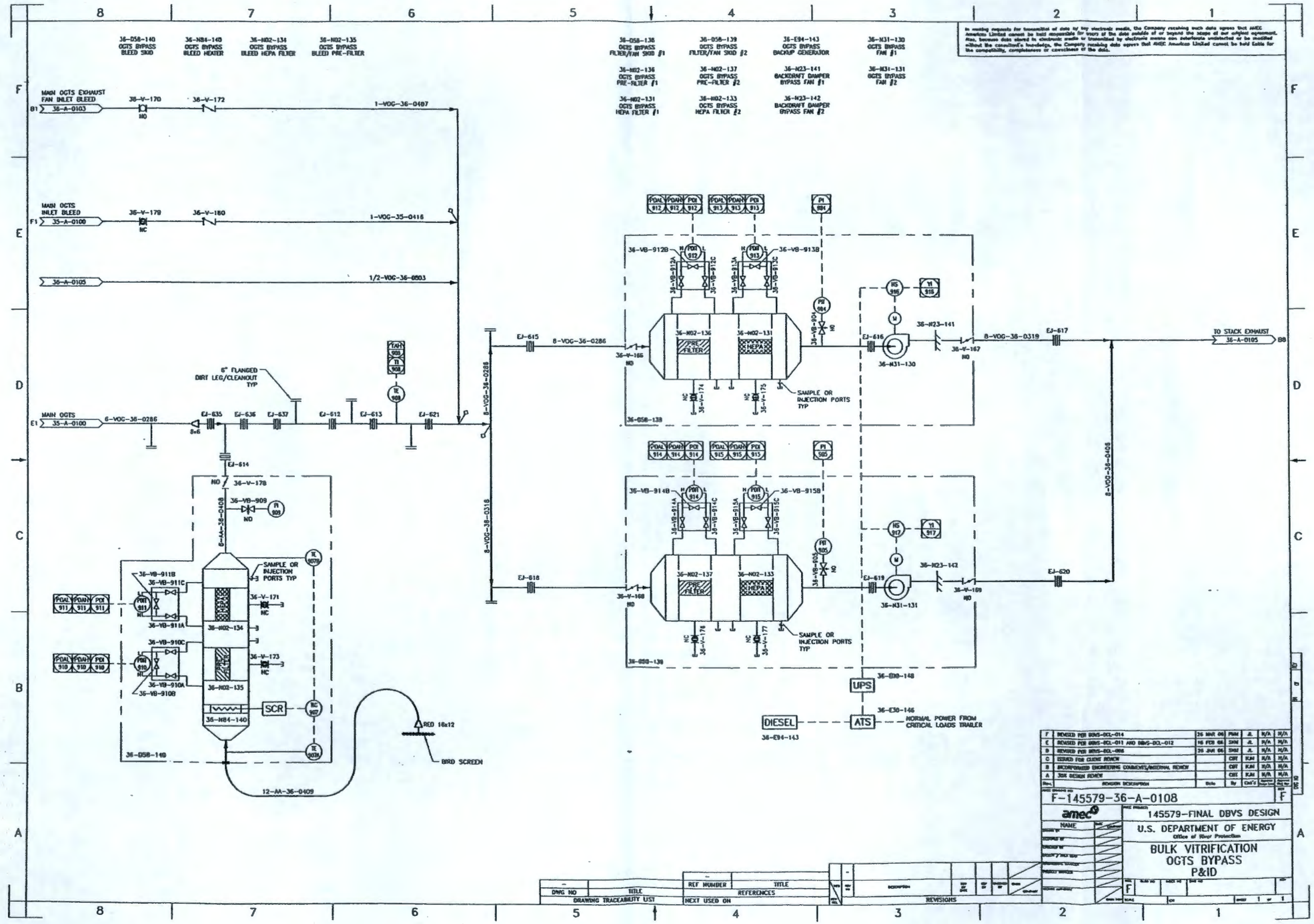
36-D58-140 OGTS BYPASS BLEED SKID
36-N84-140 OGTS BYPASS BLEED HEATER
36-N02-134 OGTS BYPASS BLEED HEPA FILTER
36-N02-135 OGTS BYPASS BLEED PRE-FILTER
36-D58-138 OGTS BYPASS FILTER/FAN SKID #1
36-D58-139 OGTS BYPASS FILTER/FAN SKID #2
36-E94-143 OGTS BYPASS BACKUP GENERATOR
36-N31-130 OGTS BYPASS FAN #1
36-N02-136 OGTS BYPASS PRE-FILTER #1
36-N02-137 OGTS BYPASS PRE-FILTER #2
36-N23-141 BACKDRAFT DAMPER BYPASS FAN #1
36-N31-131 OGTS BYPASS FAN #2
36-N02-131 OGTS BYPASS HEPA FILTER #1
36-N02-133 OGTS BYPASS HEPA FILTER #2
36-N23-142 BACKDRAFT DAMPER BYPASS FAN #2
MAIN OGTS EXHAUST FAN INLET BLEED
36-A-0103
36-V-170
36-V-172
1-VOG-36-0407
MAIN OGTS INLET BLEED
35-A-0100
36-V-179
36-V-180
1-VOG-35-0416
36-A-0105
1/2-VOG-36-0603
6" FLANGED DIRT LEG/CLEANOUT TYP
MAIN OGTS
6-VOG-36-0286
EJ-635
EJ-636
EJ-637
EJ-612
EJ-613
EJ-621
EJ-614
36-V-178
36-V-909
8-AA-36-0408
SAMPLE OR INJECTION PORTS TYP
36-V-171
36-V-173
36-N02-134
36-N02-135
SCR
36-N84-140
36-D58-140
RED 16x12
BIRD SCREEN
12-AA-36-0409
8-VOG-36-0318
EJ-615
8-VOG-36-0286
36-V-166
36-V-168
36-N02-136
36-N02-131
36-N02-137
36-N02-133
PRE FILTER
HEPA
36-V-174
36-V-175
36-V-176
36-V-177
36-D58-138
36-V-904
36-V-905
EJ-616
EJ-618
EJ-619
36-N31-130
36-N31-131
36-N23-141
36-N23-142
36-V-167
36-V-169
8-VOG-36-0319
EJ-617
EJ-620
8-VOG-36-0408
TO STACK EXHAUST
36-A-0105
UPS
36-E30-148
DIESEL
36-E94-143
ATS
36-E30-146
NORMAL POWER FROM CRITICAL LOADS TRAILER
F-145579-36-A-0108
amec
145579-FINAL DBVS DESIGN
U.S. DEPARTMENT OF ENERGY
Office of River Protection
BULK VITRIFICATION
OGTS BYPASS
P&ID
DRAWING TRACEABILITY LIST
REFERENCES
REVISIONS

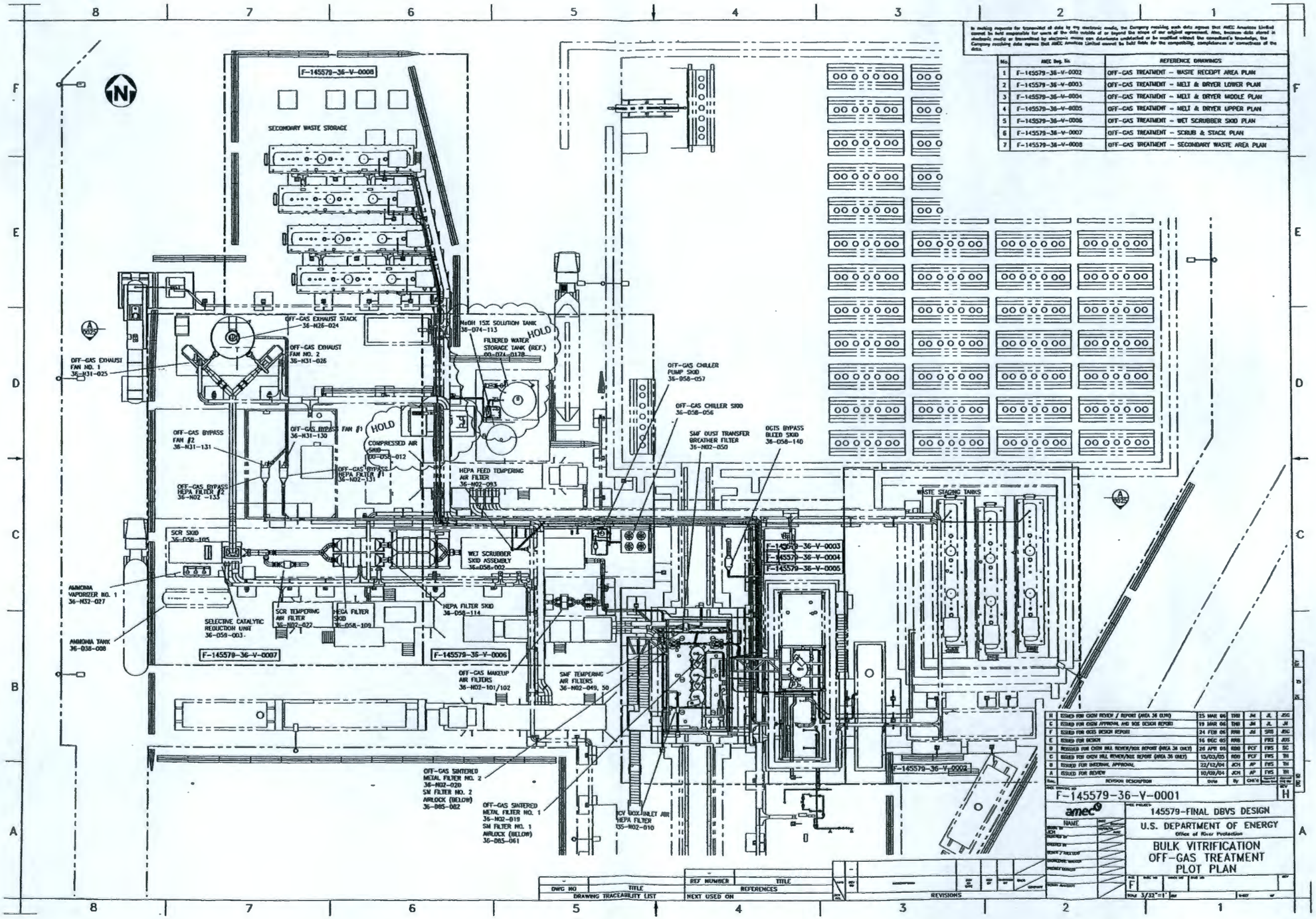

No.	AMEC Dwg. No.	REFERENCE DRAWINGS
1	F-145579-36-V-0002	OFF-GAS TREATMENT – WASTE RECEIPT AREA PLAN
2	F-145579-36-V-0003	OFF-GAS TREATMENT – MELT & DRYER LOWER PLAN
3	F-145579-36-V-0004	OFF-GAS TREATMENT – MELT & DRYER MIDDLE PLAN
4	F-145579-36-V-0005	OFF-GAS TREATMENT – MELT & DRYER UPPER PLAN
5	F-145579-36-V-0006	OFF-GAS TREATMENT – WET SCRUBBER SKID PLAN
6	F-145579-36-V-0007	OFF-GAS TREATMENT – SCRUB & STACK PLAN
7	F-145579-36-V-0008	OFF-GAS TREATMENT – SECONDARY WASTE AREA PLAN

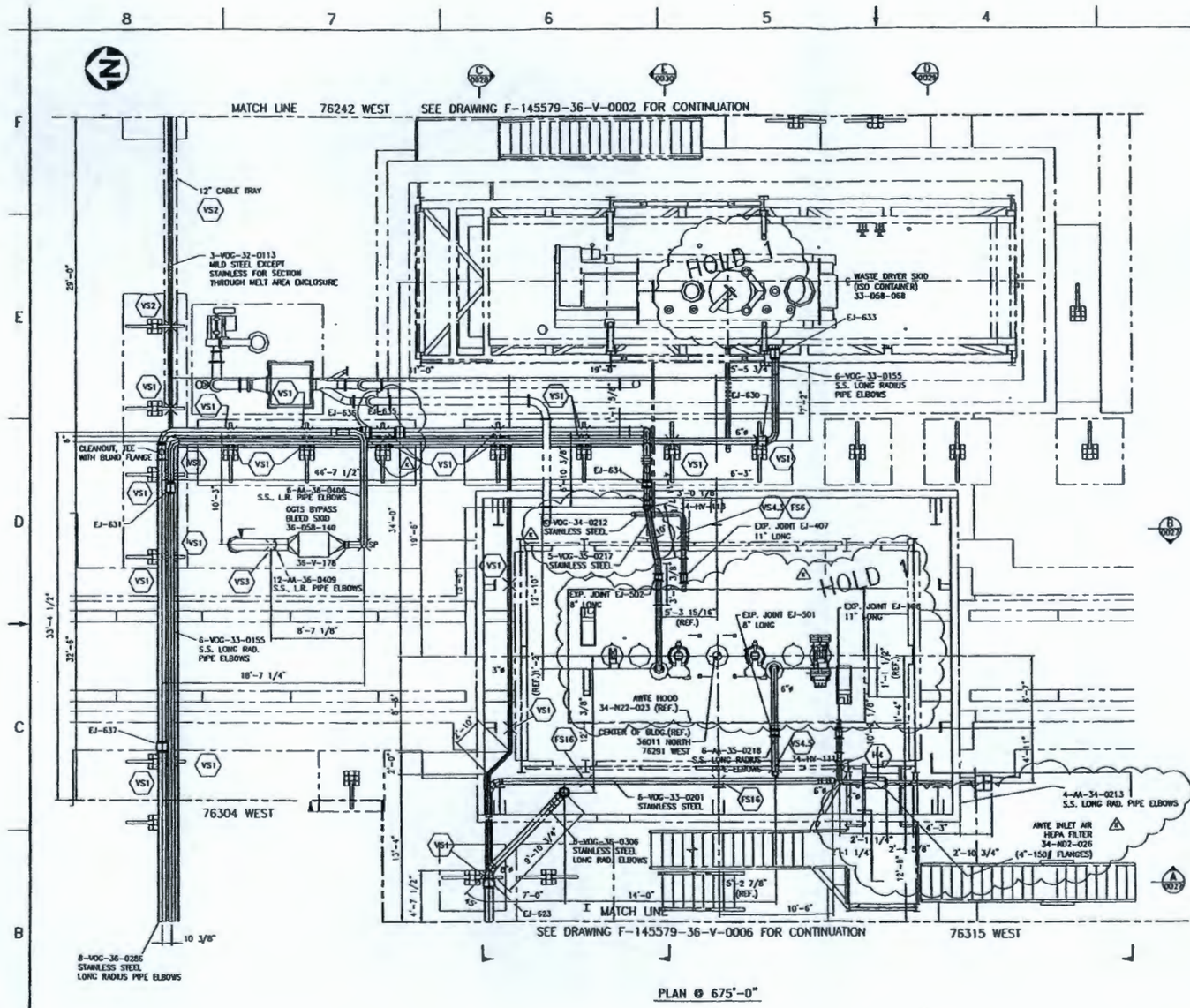

PLAN @ 675'-0"

In making requests for transmittal of data by any electronic media, the Company receiving such data agrees that AMEC Americas Limited cannot be held responsible for users of the data outside of or beyond the scope of our original agreement. Also, because data stored in electronic media or transmitted by electronic means can deteriorate undetected or be modified without the consultant's knowledge, the Company receiving data agrees that AMEC Americas Limited cannot be held liable for the compatibility, completeness or correctness of the data.

No.	AMEC Dwg. No.	REFERENCE DRAWINGS
1	F-145579-00-D-0041	MELT AREA G.A. ELEVATIONS NORTH AND WEST
2	F-145579-00-D-0051	MELT AREA G.A. PLAN VIEWS
3	F-145579-36-V-0004	OFF-GAS TREATMENT MELT & DRYER MIDDLE PLAN
4	F-145579-36-V-0005	OFF-GAS TREATMENT MELT & DRYER UPPER PLANS
5	F-145579-36-V-0027	OFF-GAS TREATMENT MELT & DRYER SECTIONS A & B
6	F-145579-36-V-0028	OFF-GAS TREATMENT MELT & DRYER SECTION C
7	F-145579-36-V-0029	OFF-GAS TREATMENT MELT & DRYER SECTION D
8	F-145579-36-V-0030	OFF-GAS TREATMENT MELT & DRYER SECTION E

NOTES:

1. ONLY VENTILATION DUCTWORK PIPING AND SUPPORTING CABLE TRAYS SHOWN. ALL OTHER PIPING AND CABLE TRAYS OMITTED FOR CLARITY.
2. DIMENSIONS AND LOCATIONS OF JOINTS TO BE CONFIRMED BY SELECTED VENDOR.
3. VENTILATION DUCTWORK PIPING TO BE MINIMUM THICKNESS SCHEDULE 40 COMPLETE WITH LONG RADIUS ELBOWS FOR 6" AND SMALLER AND SCHEDULE 10 PIPE AND PIPE FITTINGS FOR PIPE 8" AND LARGER EXCEPT AS NOTED.
4. DUCTWORK MATERIAL AND FABRICATION SHALL CONFORM TO ASME B31.1 POWER PIPING.
5. DUCTWORK FITTINGS AS PER AMEC DWG. NO. F-145579-36-V-0023 STANDARD DETAILS - SHT. 1.
6. I.D. DESIGNATES ISOLATION DAMPERS TO BE FLANGERS ROUND BUBBLE-TIGHT (FLAT BLADE TYPE). FLANGES TO MATCH 150# DRILLING.
7. VENTILATION DUCTWORK SUPPORTS ARE REPRESENTED BY A HEXAGON.
   EXAMPLES - VS- OR RG- CG- CS- A- H- DS-
   FOR "VS" TYPE SUPPORTS SEE DWG. F-145579-36-0024.
   FOR ALL OTHER SUPPORTS SEE DRAWINGS F-145579-00-P-0001 TO -0004.
8. SEE BRANCH REINFORCEMENT DETAIL ON DWG. F-145579-36-V-0023 FOR FITTINGS SHOWN SHADED.

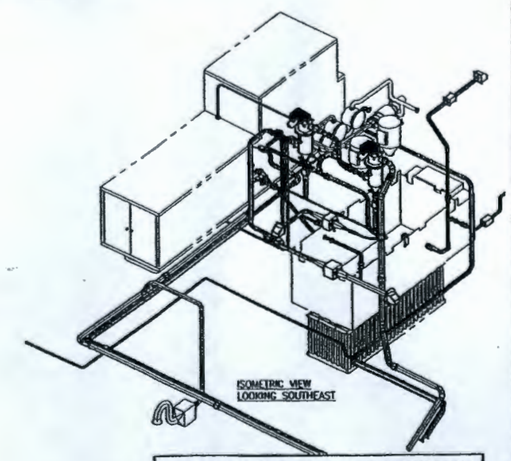

NOT APPROVED FOR CONSTRUCTION

HOLDS:
1. PENDING VENDOR INFORMATION.

Rev.	REVISION DESCRIPTION	Date	By	Chk'd	Approved	Approved Date
K	RE-ISSUED FOR OGTS DESIGN REPORT	25 MAR 05	BHB	JM	JL	JGC
J	ISSUED FOR OGTS DESIGN REPORT	24 FEB 05	BHB	JM	SRB	JGC
H	ISSUED FOR DESIGN	16/12/05	BHB		FWS	JGS
G	ISSUED FOR INFORMATION - OFF-GAS SYSTEM REVISED	14/11/05	BHB		FWS	JGS
F	REISSUED FOR CHGM HAL REVIEW/RDR REPORT(AREA 36 ONLY)	26/04/05	JCH	PCF	FWS	SC
E	ISSUED FOR CHGM HAL REVIEW/RDR REPORT (AREA 36 ONLY)	15/03/05	JCH	PCF	FWS	TH
D	ISSUED FOR CHGM HAL REVIEW/RDR REPORT (ROY SYSTEM)	02/03/05	JCH	PCF	GJ	TH
C	ISSUED FOR CHGM HAL REVIEW/RDR REPORT (AREA 33 ONLY)	31/01/05	BHB	PCF	FWS	TH
B	ISSUED FOR INTERNAL APPROVAL	17/12/04	JCH	AP	FWS	TH
A	ISSUED FOR REVIEW	05/11/04	JCH	AP	FWS	TH

AMEC DRAWING NO. F-145579-36-V-0003 REV. K

amec

NAME	DATE
DRAWN BY JCH	
REVIEWED BY	
APPROVED BY	
DISCIPLINE LEAD REVIEW	
CONSULTANT REVIEW	
PROJECT MANAGER	
FINAL APPROVAL	

145579-FINAL DBVS DESIGN

U.S. DEPARTMENT OF ENERGY
Office of River Protection

BULK VITRIFICATION
OFF-GAS TREATMENT
MELT & DRYER LOWER PLAN

SIZE F SCALE 1/4"=1'-0"

DWG NO	TITLE
DRAWING TRACEABILITY LIST	

REF NUMBER	TITLE
REFERENCES	
NEXT USED ON	

REVISIONS

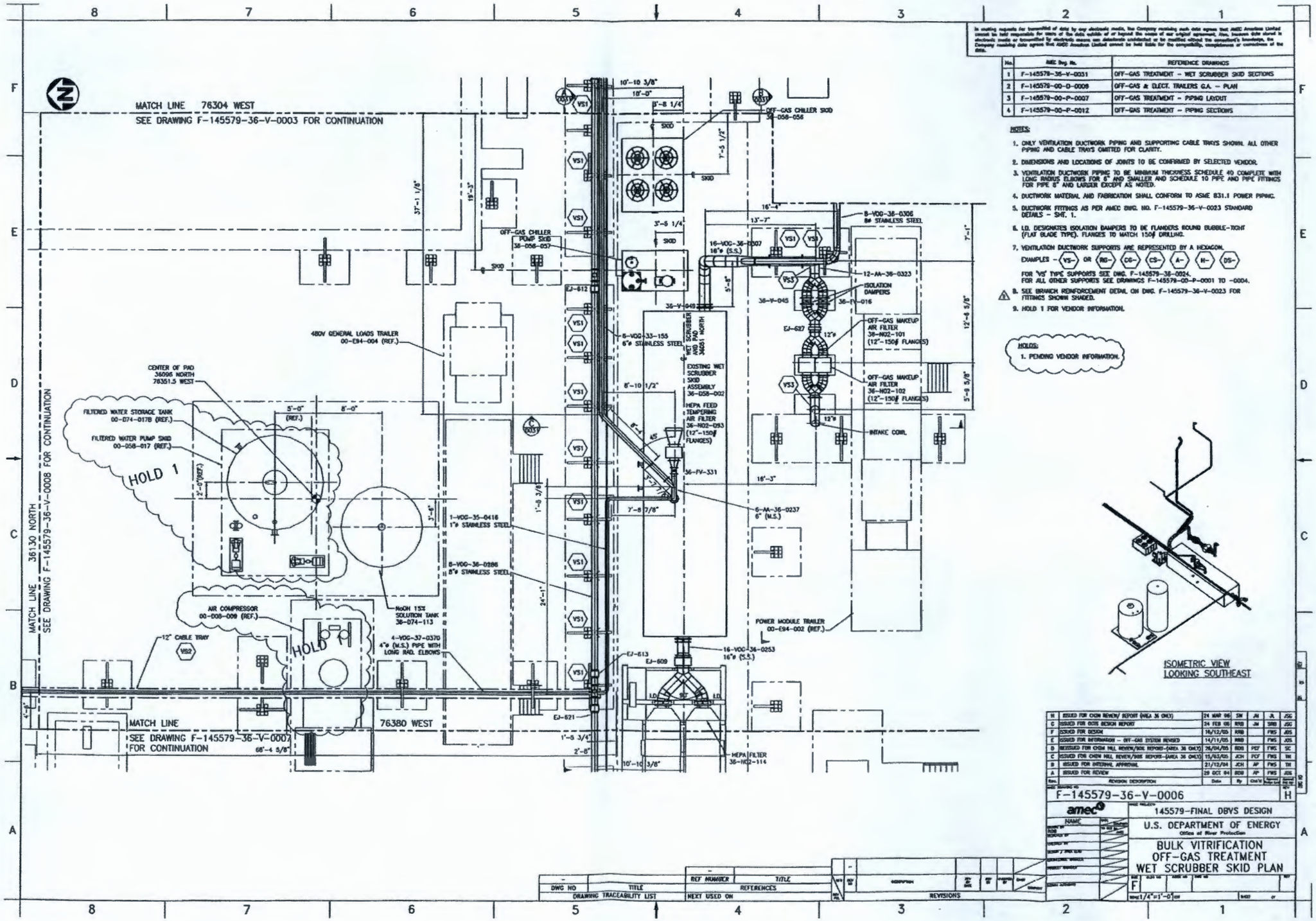

No.	AMEC Dwg. No.	REFERENCE DRAWINGS
1	F-145579-36-V-0031	OFF-GAS TREATMENT - WET SCRUBBER SKID SECTIONS
2	F-145579-00-D-0009	OFF-GAS & ELECT. TRAILERS G.A. - PLAN
3	F-145579-00-P-0007	OFF-GAS TREATMENT - PIPING LAYOUT
4	F-145579-00-P-0012	OFF-GAS TREATMENT - PIPING SECTIONS

NOTES:

1. ONLY VENTILATION DUCTWORK PIPING AND SUPPORTING CABLE TRAYS SHOWN. ALL OTHER PIPING AND CABLE TRAYS OMITTED FOR CLARITY.
2. DIMENSIONS AND LOCATIONS OF JOINTS TO BE CONFIRMED BY SELECTED VENDOR.
3. VENTILATION DUCTWORK PIPING TO BE MINIMUM THICKNESS SCHEDULE 40 COMPLETE WITH LONG RADIUS ELBOWS FOR 6" AND SMALLER AND SCHEDULE 10 PIPE AND PIPE FITTINGS FOR PIPE 8" AND LARGER EXCEPT AS NOTED.
4. DUCTWORK MATERIAL AND FABRICATION SHALL CONFORM TO ASME B31.1 POWER PIPING.
5. DUCTWORK FITTINGS AS PER AMEC DWG. NO. F-145579-36-V-0023 STANDARD DETAILS - SHT. 1.
6. I.D. DESIGNATES ISOLATION DAMPERS TO BE FLANGERS ROUND BUBBLE-TIGHT (FLAT BLADE TYPE). FLANGES TO MATCH 150# DRILLING.
7. VENTILATION DUCTWORK SUPPORTS ARE REPRESENTED BY A HEXAGON.
   EXAMPLES - VS- OR RG- CG- CS- A- H- DS-
   FOR "VS" TYPE SUPPORTS SEE DWG. F-145579-36-0024.
   FOR ALL OTHER SUPPORTS SEE DRAWINGS F-145579-00-P-0001 TO -0004.
8. SEE BRANCH REINFORCEMENT DETAIL ON DWG. F-145579-36-V-0023 FOR FITTINGS SHOWN SHADED.
9. HOLD 1 FOR VENDOR INFORMATION.

HOLDS:
1. PENDING VENDOR INFORMATION.

ISOMETRIC VIEW
LOOKING SOUTHEAST

Rev.	REVISION DESCRIPTION	Date	By	Chk'd	Appr'd	Appr'd	Appr'd
H	ISSUED FOR CHEM REVIEW/ REPORT (AREA 36 ONLY)	24 MAR 06	SW	JH	JL	JSG	
G	ISSUED FOR DOE DESIGN REPORT	24 FEB 06	RMB	JM	SRB	JSG	
F	ISSUED FOR DESIGN	16/12/05	RMB		FWS	JDS	
E	ISSUED FOR INFORMATION - OFF-GAS SYSTEM REVISED	14/11/05	RMB		FWS	JDS	
D	REISSUED FOR CHEM HILL REVIEW/DOE REPORT-(AREA 36 ONLY)	26/04/05	RDS	FCF	FWS	SC	
C	ISSUED FOR CHEM HILL REVIEW/DOE REPORT-(AREA 36 ONLY)	15/03/05	JCH	FCF	FWS	TH	
B	ISSUED FOR INTERNAL APPROVAL	21/12/04	JCH	AP	FWS	TH	
A	ISSUED FOR REVIEW	29 OCT 04	RDS	AP	FWS	JDS	

DRAWING NO. F-145579-36-V-0006 H

amec

PROJECT: 145579-FINAL DBVS DESIGN

U.S. DEPARTMENT OF ENERGY
Office of River Protection

BULK VITRIFICATION
OFF-GAS TREATMENT
WET SCRUBBER SKID PLAN

SIZE F | SCALE 1/4"=1'-0" | SHEET of

DWG NO	TITLE	REF NUMBER	TITLE
DRAWING TRACEABILITY LIST		REFERENCES	

NEXT USED ON

REV NO	DESCRIPTION	DATE	BY	CHK'D	APPR'D
REVISIONS					

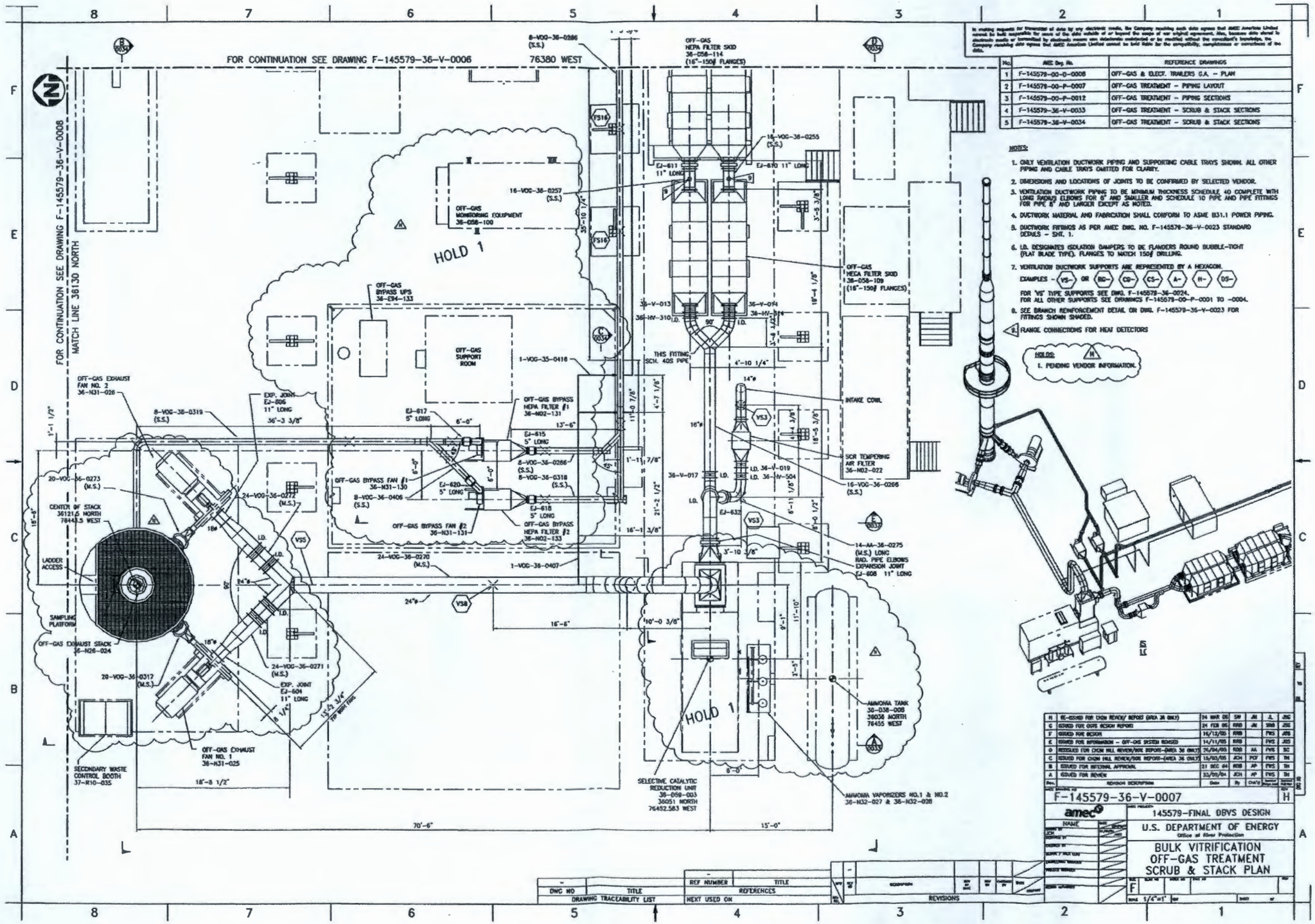
FOR CONTINUATION SEE DRAWING F-145579-36-V-0006
76380 WEST
FOR CONTINUATION SEE DRAWING F-145579-36-V-0008
MATCH LINE 38130 NORTH
HOLD 1
OFF-GAS MONITORING EQUIPMENT 36-058-100
OFF-GAS BYPASS UPS 36-E94-133
OFF-GAS SUPPORT ROOM
OFF-GAS HEPA FILTER SKID 36-058-114 (16"-150# FLANGES)
OFF-GAS HEPA FILTER SKID 36-058-109 (16"-150# FLANGES)
OFF-GAS EXHAUST FAN NO. 2 36-N31-026
OFF-GAS BYPASS FAN #1 36-N31-130
OFF-GAS BYPASS FAN #2 36-N31-131
OFF-GAS BYPASS HEPA FILTER #1 36-N02-131
OFF-GAS BYPASS HEPA FILTER #2 36-N02-133
INTAKE COWL
SCR TEMPERING AIR FILTER 36-N02-022
CENTER OF STACK 36121.6 NORTH 78443.5 WEST
LADDER ACCESS
SAMPLING PLATFORM
OFF-GAS EXHAUST STACK 36-N26-024
SECONDARY WASTE CONTROL BOOTH 37-R10-035
OFF-GAS EXHAUST FAN NO. 1 36-N31-025
SELECTIVE CATALYTIC REDUCTION UNIT 36-D59-003 36051 NORTH 76452.583 WEST
AMMONIA VAPORIZERS NO.1 & NO.2 36-N32-027 & 36-N32-028
AMMONIA TANK 36-038-008 36036 NORTH 76455 WEST
70'-6"
15'-0"
18'-8 1/2"
NOTES:
1. ONLY VENTILATION DUCTWORK PIPING AND SUPPORTING CABLE TRAYS SHOWN. ALL OTHER PIPING AND CABLE TRAYS OMITTED FOR CLARITY.
2. DIMENSIONS AND LOCATIONS OF JOINTS TO BE CONFIRMED BY SELECTED VENDOR.
3. VENTILATION DUCTWORK PIPING TO BE MINIMUM THICKNESS SCHEDULE 40 COMPLETE WITH LONG RADIUS ELBOWS FOR 8" AND SMALLER AND SCHEDULE 10 PIPE AND PIPE FITTINGS FOR PIPE 8" AND LARGER EXCEPT AS NOTED.
4. DUCTWORK MATERIAL AND FABRICATION SHALL CONFORM TO ASME B31.1 POWER PIPING.
5. DUCTWORK FITTINGS AS PER AMEC DWG. NO. F-145579-36-V-0023 STANDARD DETAILS - SHT. 1.
6. I.D. DESIGNATES ISOLATION DAMPERS TO BE FLANGERS ROUND BUBBLE-TIGHT (FLAT BLADE TYPE). FLANGES TO MATCH 150# DRILLING.
7. VENTILATION DUCTWORK SUPPORTS ARE REPRESENTED BY A HEXAGON.
EXAMPLES - VS- OR BG- CD- CS- A- H- DS-
FOR "VS" TYPE SUPPORTS SEE DWG. F-145579-36-0024.
FOR ALL OTHER SUPPORTS SEE DRAWINGS F-145579-00-P-0001 TO -0004.
8. SEE BRANCH REINFORCEMENT DETAIL ON DWG. F-145579-36-V-0023 FOR FITTINGS SHOWN SHADED.
FLANGE CONNECTIONS FOR HEAT DETECTORS
HOLDS:
1. PENDING VENDOR INFORMATION.
F-145579-36-V-0007
H
amec
145579-FINAL DBVS DESIGN
U.S. DEPARTMENT OF ENERGY
Office of River Protection
BULK VITRIFICATION
OFF-GAS TREATMENT
SCRUB & STACK PLAN
DRAWING TRACEABILITY LIST
REFERENCES
REVISIONS

A5-485

No.	AMEC Dwg. No.	REFERENCE DRAWINGS
1	F-145579-00-D-0041	MELT AREA G.A. ELEVATIONS NORTH AND WEST
2	F-145579-00-D-0051	MELT AREA G.A. PLAN VIEWS
3	F-145579-36-V-0003	OFF-GAS TREATMENT MELT & DRYER LOWER PLAN
4	F-145579-36-V-0004	OFF-GAS TREATMENT MELT & DRYER MIDDLE PLAN
5	F-145579-36-V-0005	OFF-GAS TREATMENT MELT & DRYER UPPER PLANS
6	F-145579-36-V-0027	OFF-GAS TREATMENT MELT & DRYER SECTIONS A & B
7	F-145579-36-V-0029	OFF-GAS TREATMENT MELT & DRYER SECTION D
8	F-145579-36-V-0030	OFF-GAS TREATMENT MELT & DRYER SECTION E

NOTES:

1. ONLY VENTILATION DUCTWORK PIPING AND SUPPORTING CABLE TRAYS SHOWN. ALL OTHER PIPING AND CABLE TRAYS OMITTED FOR CLARITY.
2. DIMENSIONS AND LOCATIONS OF JOINTS TO BE CONFIRMED BY SELECTED VENDOR.
3. VENTILATION DUCTWORK PIPING TO BE MINIMUM THICKNESS SCHEDULE 40 COMPLETE WITH LONG RADIUS ELBOWS FOR 6" AND SMALLER AND SCHEDULE 10 PIPE AND PIPE FITTINGS FOR PIPE 8" AND LARGER EXCEPT AS NOTED.
4. DUCTWORK MATERIAL AND FABRICATION SHALL CONFORM TO ASME B31.1 POWER PIPING.
5. DUCTWORK FITTINGS AS PER AMEC DWG. NO. F-145579-36-V-0023 STANDARD DETAILS - SHT. 1.
6. I.D. DESIGNATES ISOLATION DAMPERS TO BE FLANGED ROUND BUBBLE-TIGHT (FLAT BLADE TYPE). FLANGES TO MATCH 150# DRILLING.
7. VENTILATION DUCTWORK SUPPORTS ARE REPRESENTED BY A HEXAGON.
   EXAMPLES - VS- OR RO- CO- CS- A- H- BS-
   FOR "VS" TYPE SUPPORTS SEE DWG. F-145579-36-0024, FOR ALL OTHER SUPPORTS SEE DRAWINGS F-145579-00-P-0001 TO -0004.
8. SEE BRANCH REINFORCEMENT DETAIL ON DWG. F-145579-36-V-0023 FOR FITTINGS SHOWN SHADED.

HOLDS:
1. PENDING VENDOR INFORMATION.

NOT APPROVED FOR CONSTRUCTION

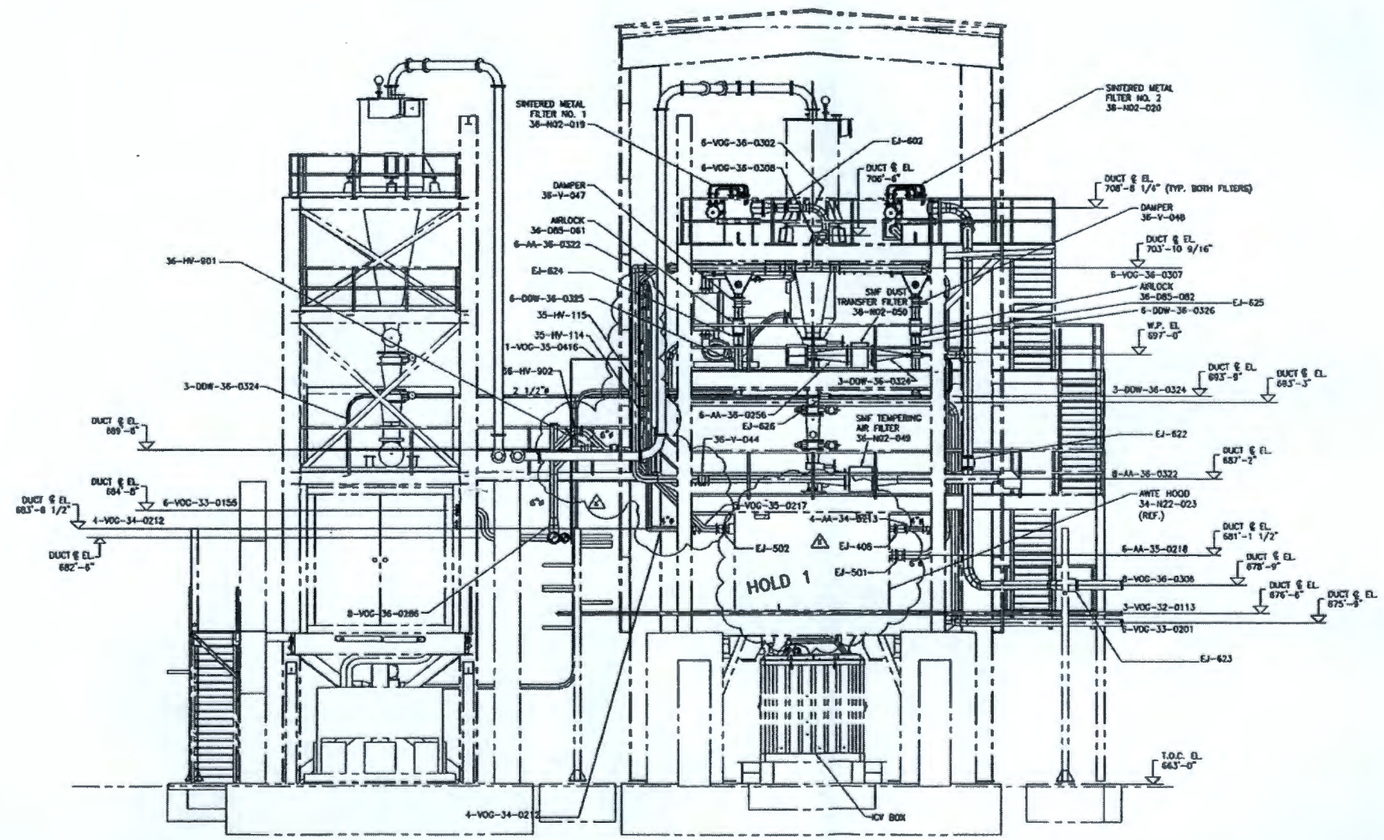

SECTION C C C
1/4"=1'-0" 0003 0004 0005

Rev.	REVISION DESCRIPTION	Date	By	CHK'D	Appr.	Appr. Date
K	RE-ISSUED FOR OGTS DESIGN PACKAGE	24 MAR 06	SM	AM	JL	JSB
J	ISSUED FOR OGTS DESIGN REVIEW	24 FEB 06	RRB	AM	SRB	JSB
H	ISSUED FOR DESIGN	16/12/05	RRB		FWS	JBS
G	ISSUED FOR INFORMATION - OFF-GAS SYSTEM REVISED	14/11/05	RCB		FWS	JBS
F	REISSUED FOR CHCM HILL REVIEW/BOX REPORT(AREA 36 ONLY)	28/04/05	RCB	PCF	FWS	SC
E	ISSUED FOR CHCM HILL REVIEW/BOX REPORT (AREA 36 ONLY)	18/03/05	RCB	PCF	FWS	TH
D	ISSUED FOR CHCM HILL REVIEW/BOX REPORT (ICV SYSTEM)	02/03/05	RCB	PCF	GJ	TH
C	ISSUED FOR CHCM HILL REVIEW/BOX REPORT (AREA 33 ONLY)	31/01/05	RCB	PCF	FWS	TH
B	ISSUED FOR INTERNAL APPROVAL	17/12/04	RCB	AP	FWS	TH
A	ISSUED FOR REVIEW	05/11/04	RCB	AP	FWS	TH

Dwg. No. F-145579-36-V-0028 Rev. K

amec

NAME

DWG PROJECT 145579-FINAL D&VS DESIGN

U.S. DEPARTMENT OF ENERGY
Office of River Protection

BULK VITRIFICATION
OFF-GAS TREATMENT
MELT & DRYER SECTION 'C'

SIZE F SCALE 1/4"=1'-0"

DWG NO	TITLE
-	

DRAWING TRACEABILITY LIST

REF NUMBER	TITLE
-	

REFERENCES
NEXT USED ON

REVISIONS

In making requests for transmittal of data by any electronic media, the Company receiving such data agrees that AMEC Americas Limited cannot be held responsible for users of the data outside of or beyond the scope of our original agreement. Also, because data stored in electronic media or transmitted by electronic means can deteriorate undetected or be modified without the consultant's knowledge, the Company receiving data agrees that AMEC Americas Limited cannot be held liable for the compatibility, completeness or correctness of the data.

No.	AMEC Drg. No.	REFERENCE DRAWINGS
1	F-145579-00-D-0041	MELT AREA G.A. ELEVATIONS NORTH AND WEST
2	F-145579-00-D-0054	MELT AREA G.A. PLAN VIEWS
3	F-145579-36-V-0003	OFF-GAS TREATMENT MELT & DRYER LOWER PLAN
4	F-145579-36-V-0004	OFF-GAS TREATMENT MELT & DRYER MIDDLE PLAN
5	F-145579-36-V-0005	OFF-GAS TREATMENT MELT & DRYER UPPER PLANS
6	F-145579-36-V-0027	OFF-GAS TREATMENT MELT & DRYER SECTIONS A & B
7	F-145579-36-V-0028	OFF-GAS TREATMENT MELT & DRYER SECTION C
8	F-145579-36-V-0030	OFF-GAS TREATMENT MELT & DRYER SECTION E

NOTES:

1. ONLY VENTILATION DUCTWORK PIPING AND SUPPORTING CABLE TRAYS SHOWN. ALL OTHER PIPING AND CABLE TRAYS OMITTED FOR CLARITY.
2. DIMENSIONS AND LOCATIONS OF JOINTS TO BE CONFIRMED BY SELECTED VENDOR.
3. VENTILATION DUCTWORK PIPING TO BE MINIMUM THICKNESS SCHEDULE 40 COMPLETE WITH LONG RADIUS ELBOWS FOR 6" AND SMALLER AND SCHEDULE 10 PIPE AND PIPE FITTINGS FOR PIPE 8" AND LARGER EXCEPT AS NOTED.
4. DUCTWORK MATERIAL AND FABRICATION SHALL CONFORM TO ASME B31.1 POWER PIPING.
5. DUCTWORK FITTINGS AS PER AMEC DWG. NO. F-145579-36-V-0023 STANDARD DETAILS - SHT. 1.
6. I.D. DESIGNATES ISOLATION DAMPERS TO BE FLANGERS ROUND BUBBLE-TIGHT (FLAT BLADE TYPE). FLANGES TO MATCH 150# DRILLING.
7. VENTILATION DUCTWORK SUPPORTS ARE REPRESENTED BY A HEXAGON.
   EXAMPLES - VS- OR RG- CG- CS- A- H- DS-
   FOR "VS" TYPE SUPPORTS SEE DWG. F-145579-36-D024.
   FOR ALL OTHER SUPPORTS SEE DRAWINGS F-145579-00-P-0001 TO -0004.
8. SEE BRANCH REINFORCEMENT DETAIL ON DWG. F-145579-36-V-0023 FOR FITTINGS SHOWN SHADED.

HOLDS:
1. PENDING VENDOR INFORMATION.

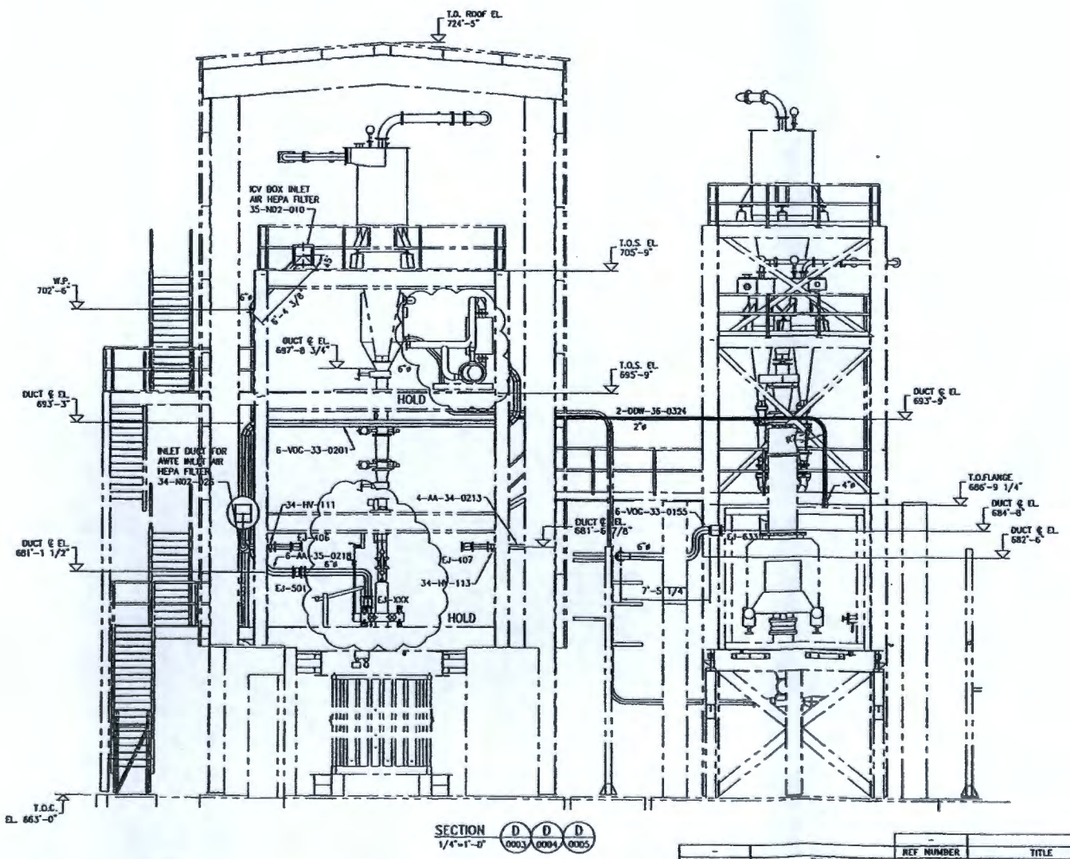

SECTION D/0003 D/0004 D/0005
1/4"=1'-0"

NOT APPROVED FOR CONSTRUCTION

Rev.	REVISION DESCRIPTION	Date	By	Chk'd	Appr'd	Appr'd
J	ISSUED FOR CHCM REVIEW/REPORT (AREA 36 ONLY)	25 MAR 06	TMB	JM	JL	JSC
H	ISSUED FOR OGTS DESIGN REPORT	24 FEB 06	RMB	JM	SMB	JSC
G	ISSUED FOR DESIGN	16/12/05	RMB		TWS	JRS
F	REISSUED FOR CHCM MILL REVIEW/DOX REPORT (AREA 36 ONLY)	30/04/05	JCH	PCF	TWS	SC
E	ISSUED FOR CHCM MILL REVIEW/DOX REPORT (AREA 36 ONLY)	15/03/05	JCH	PCF	TWS	TM
D	ISSUED FOR CHCM MILL REVIEW/DOX REPORT - DCV SYSTEM	02/03/05	JCH	PCF	CJ	TM
C	ISSUED FOR CHCM MILL REVIEW/DOX REPORT - (AREA 33 ONLY)	31/01/05	JCH	PCF	TWS	TM
B	ISSUED FOR INTERNAL APPROVAL	17/12/04	RDB	AP	TWS	TM
A	ISSUED FOR REVIEW	10/11/04	RDB	AP	CJ	TM

DWG NO: F-145579-36-V-0029 — REV: J

amec

PROJECT: 145579-FINAL DBVS DESIGN

U.S. DEPARTMENT OF ENERGY
Office of River Protection

BULK VITRIFICATION
OFF-GAS TREATMENT
MELT & DRYER SECTION 'D'

SIZE: F — SCALE: 1/4"=1'-0"

DWG NO	TITLE
DRAWING TRACEABILITY LIST	

REF NUMBER	TITLE
REFERENCES	

NEXT USED ON

REV	DESCRIPTION	DWG NO	REV	PROJECT ID	DATE
-					

REVISIONS

In making requests for transmittal of data by any electronic media, the Company requesting such data agrees that AMEC Americas Limited cannot be held responsible for users of the data outside of or beyond the scope of our original agreement. Also, because data stored in electronic media or transmitted by electronic means can deteriorate undetected or be modified without the consultant's knowledge, the Company receiving data agrees that AMEC Americas Limited cannot be held liable for the compatibility, completeness or correctness of the data.

No.	AMEC Dwg. No.	REFERENCE DRAWINGS
1	F-145579-00-0-0041	MELT AREA G.A. ELEVATIONS NORTH AND WEST
2	F-145579-00-0-0051	MELT AREA G.A. PLAN VIEWS
3	F-145579-36-V-0003	OFF-GAS TREATMENT MELT & DRYER LOWER PLAN
4	F-145579-36-V-0004	OFF-GAS TREATMENT MELT & DRYER MIDDLE PLAN
5	F-145579-36-V-0005	OFF-GAS TREATMENT MELT & DRYER UPPER PLANS
5	F-145579-36-V-0027	OFF-GAS TREATMENT MELT & DRYER SECTIONS A & B
6	F-145579-36-V-0028	OFF-GAS TREATMENT MELT & DRYER SECTION C
7	F-145579-36-V-0029	OFF-GAS TREATMENT MELT & DRYER SECTION D

NOTES:

1. ONLY VENTILATION DUCTWORK PIPING AND SUPPORTING CABLE TRAYS SHOWN. ALL OTHER PIPING AND CABLE TRAYS OMITTED FOR CLARITY.
2. DIMENSIONS AND LOCATIONS OF JOINTS TO BE CONFIRMED BY SELECTED VENDOR.
3. VENTILATION DUCTWORK PIPING TO BE MINIMUM THICKNESS SCHEDULE 40 COMPLETE WITH LONG RADIUS ELBOWS FOR 6" AND SMALLER AND SCHEDULE 10 PIPE AND PIPE FITTINGS FOR PIPE 8" AND LARGER EXCEPT AS NOTED.
4. DUCTWORK MATERIAL AND FABRICATION SHALL CONFORM TO ASME B31.1 POWER PIPING.
5. DUCTWORK FITTINGS AS PER AMEC DWG. NO. F-145579-36-V-0023 STANDARD DETAILS - SHT. 1.
6. I.D. DESIGNATES ISOLATION DAMPERS TO BE FLANGERS ROUND BUBBLE-TIGHT (FLAT BLADE TYPE). FLANGES TO MATCH 150# DRILLING.
7. VENTILATION DUCTWORK SUPPORTS ARE REPRESENTED BY A HEXAGON.
   EXAMPLES - VS- OR RG- CC- CS- A- H- BS-
   FOR "VS" TYPE SUPPORTS SEE DWG. F-145579-36-0024.
   FOR ALL OTHER SUPPORTS SEE DRAWINGS F-145579-00-P-0001 TO -0004.
8. SEE BRANCH REINFORCEMENT DETAIL ON DWG. F-145579-36-V-0023 FOR FITTINGS SHOWN SHADED.

HOLDS:
1. PENDING VENDOR INFORMATION.

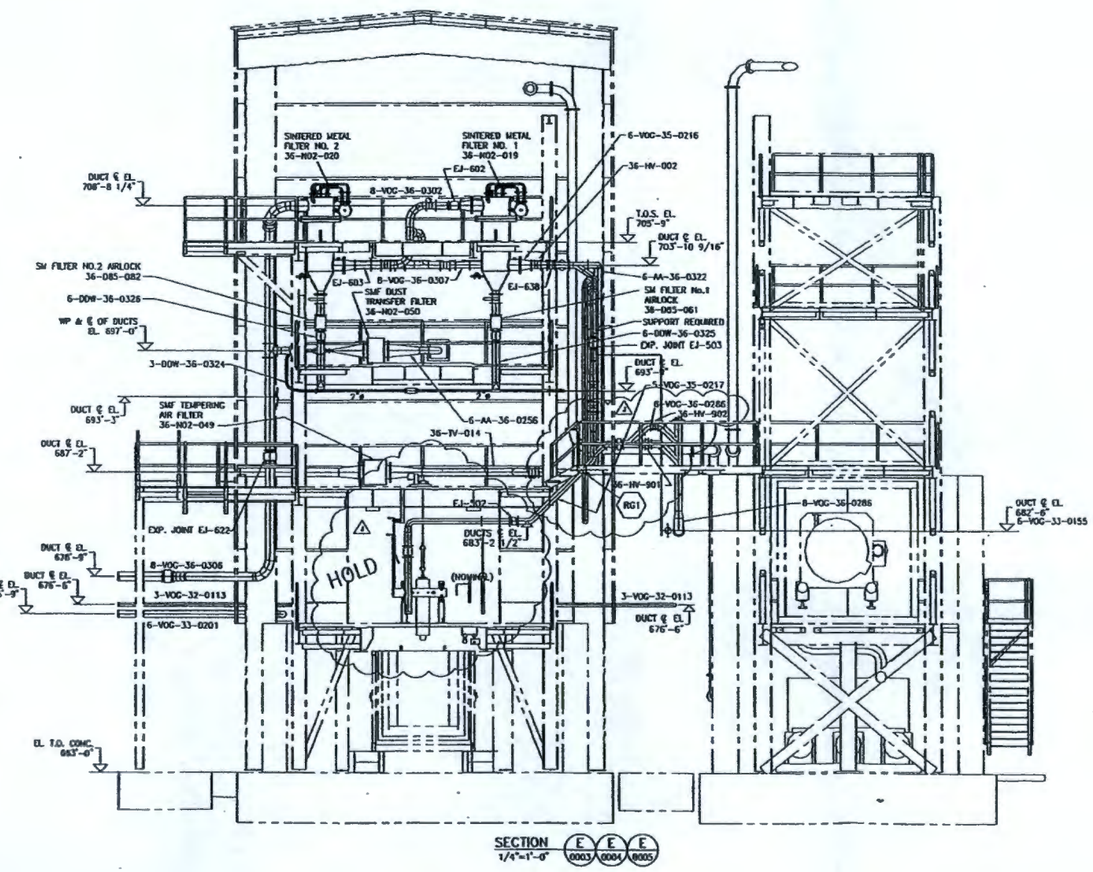

SECTION E 0003 E 0004 E 0005
1/4"=1'-0"

NOT APPROVED FOR CONSTRUCTION

Rev.	REVISION DESCRIPTION	Date	By	CHK'd	Rev. Appr.	Proj. Eng. Appr.
J	RE-ISSUED FOR OGTS DESIGN REPORT	25 MAR 06	THB	JM	R.	JSG
H	ISSUED FOR OGTS DESIGN REPORT	24 FEB 06	RHB	JM	SRB	JSG
G	ISSUED FOR DESIGN	16/12/05	RHB		FWS	JMS
F	ISSUED FOR INFORMATION - OFF-GAS SYSTEM REVISED	14/11/05	RDB		FWS	JMS
E	REISSUED FOR CH2M HILL REVIEW/WBS REPORT (AREA 36 ONLY)	16/04/05	JCH	PCF	FWS	SC
D	ISSUED FOR CH2M HILL REVIEW/WBS REPORT (AREA 36 ONLY)	15/03/05	JCH	PCF	FWS	TH
C	ISSUED FOR CH2M HILL REVIEW/WBS REPORT (KCV SYSTEM)	02/03/05	JCH	PCF	GJ	TH
B	ISSUED FOR CH2M HILL REVIEW/WBS REPORT (AREA 33 ONLY)	31/01/05	RDB	PCF	FWS	TH
A	ISSUED FOR INTERNAL APPROVAL	17/12/04	RDB	AP	FWS	TH

DWG. DRAWING NO. F-145579-36-V-0030 REV J

amec

NAME

DWN BY RDB
DESIGNED BY
CHECKED BY
REVIEW / APPR. GEOM
CONTRACTING SERVICES
PROJECT SERVICES
DESIGN AUTHORITY

NAME PROJECT: 145579-FINAL DBVS DESIGN

U.S. DEPARTMENT OF ENERGY
Office of River Protection

BULK VITRIFICATION
OFF-GAS TREATMENT
MELT & DRYER SECTION 'E'

SIZE F | FILE NO. | DRAW NO. | DWG NO. | REV
SCALE 1/4"=1'-0" | CD | SHEET | OF

DWG NO	TITLE	REF NUMBER	TITLE
DRAWING TRACEABILITY LIST	REFERENCES	NEXT USED ON	

REVISIONS

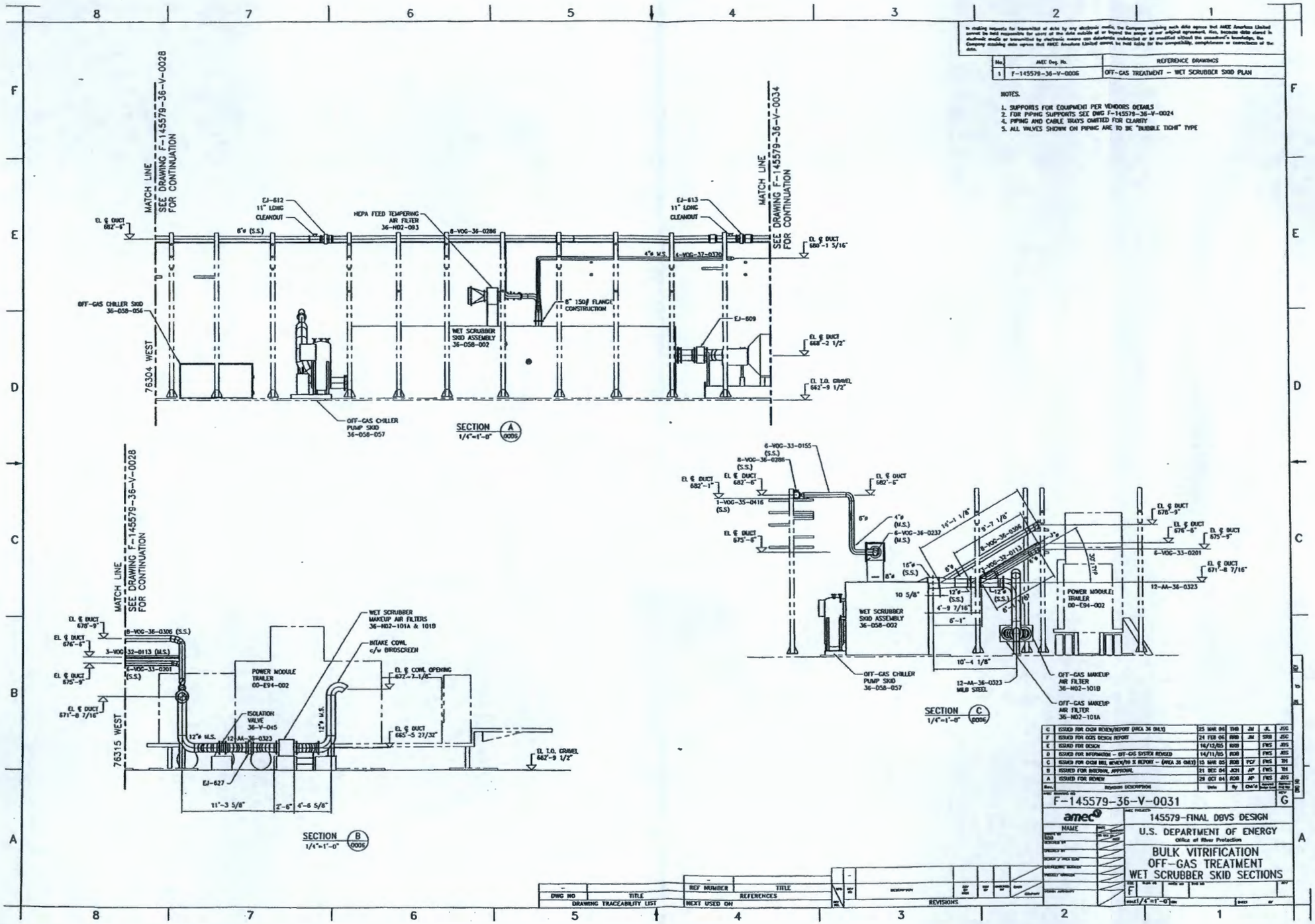
MATCH LINE
SEE DRAWING F-145579-36-V-0028 FOR CONTINUATION
MATCH LINE
SEE DRAWING F-145579-36-V-0034 FOR CONTINUATION
EJ-612
11" LONG
CLEANOUT
HEPA FEED TEMPERING AIR FILTER 36-H02-093
8-VOG-36-0286
EJ-613
11" LONG
CLEANOUT
EL. ℄ DUCT 682'-6"
6"ø (S.S.)
4"ø M.S.
4-VOG-37-0370
EL. ℄ DUCT 680'-1 5/16"
OFF-GAS CHILLER SKID 36-058-056
8" 150# FLANGE CONSTRUCTION
WET SCRUBBER SKID ASSEMBLY 36-058-002
EJ-609
EL. ℄ DUCT 668'-2 1/2"
EL. T.O. GRAVEL 662'-9 1/2"
76304 WEST
OFF-GAS CHILLER PUMP SKID 36-058-057
SECTION A 0006
1/4"=1'-0"
EL. ℄ DUCT 678'-9"
EL. ℄ DUCT 676'-4"
EL. ℄ DUCT 675'-9"
EL. ℄ DUCT 671'-8 7/16"
8-VOG-36-0306 (S.S.)
3-VOG-32-0113 (M.S.)
6-VOG-33-0201 (S.S.)
POWER MODULE TRAILER 00-E94-002
WET SCRUBBER MAKEUP AIR FILTERS 36-H02-101A & 101B
INTAKE COWL c/w BIRDSCREEN
EL. ℄ COWL OPENING 672'-7 1/8"
ISOLATION VALVE 36-V-045
12"ø M.S.
12-AA-36-0323
EL. ℄ DUCT 665'-5 21/32"
EL. T.O. GRAVEL 662'-9 1/2"
76315 WEST
EJ-627
11'-3 5/8"
2'-6"
4'-6 5/8"
SECTION B 0006
1/4"=1'-0"
6-VOG-33-0155 (S.S.)
8-VOG-36-0288 (S.S.)
EL. ℄ DUCT 682'-1"
EL. ℄ DUCT 682'-6"
1-VOG-35-0416 (S.S.)
EL. ℄ DUCT 675'-6"
4"ø (M.S.)
6-VOG-36-0237 (M.S.)
14'-1 1/8"
8-VOG-36-0306
8-VOG-32-0113
16"ø (S.S.)
10 5/8"
12"ø (S.S.)
4'-9 7/16"
6'-1"
WET SCRUBBER SKID ASSEMBLY 36-058-002
10'-4 1/8"
OFF-GAS CHILLER PUMP SKID 36-058-057
12-AA-36-0323 MILD STEEL
OFF-GAS MAKEUP AIR FILTER 36-H02-101B
OFF-GAS MAKEUP AIR FILTER 36-H02-101A
POWER MODULE TRAILER 00-E94-002
6-VOG-33-0201
12-AA-36-0323
EL. ℄ DUCT 671'-8 7/16"
SECTION C 0006
1/4"=1'-0"
NOTES.
1. SUPPORTS FOR EQUIPMENT PER VENDORS DETAILS
2. FOR PIPING SUPPORTS SEE DWG F-145578-36-V-0024
4. PIPING AND CABLE TRAYS OMITTED FOR CLARITY
5. ALL VALVES SHOWN ON PIPING ARE TO BE "BUBBLE TIGHT" TYPE
No. | AMEC Dwg. No. | REFERENCE DRAWINGS
1 | F-145579-36-V-0006 | OFF-GAS TREATMENT - WET SCRUBBER SKID PLAN
G | ISSUED FOR CHCM REVIEW/REPORT (AREA 36 ONLY) | 25 MAR 04 | TMB | JM | JL | JGC
F | ISSUED FOR CGS DESIGN REPORT | 24 FEB 04 | RMB | JM | SRB | JGC
E | ISSUED FOR DESIGN | 16/12/03 | RMB | | FWS | JGS
D | ISSUED FOR INFORMATION - OFF-GAS SYSTEM REVISED | 14/11/03 | RGB | | FWS | JGS
C | ISSUED FOR CHCM HEL REVIEW/90 % REPORT - (AREA 36 ONLY) | 15 MAR 03 | RGB | PCF | FWS | TH
B | ISSUED FOR INTERNAL APPROVAL | 21 DEC 02 | JCH | AP | FWS | TH
A | ISSUED FOR REVIEW | 28 OCT 02 | RGB | AP | FWS | JGS
Rev. | REVISION DESCRIPTION | Date | By | Chk'd | Approved Design Lead | Approved Proj Eng
F-145579-36-V-0031
G
amec
145579-FINAL DBVS DESIGN
U.S. DEPARTMENT OF ENERGY
Office of River Protection
BULK VITRIFICATION
OFF-GAS TREATMENT
WET SCRUBBER SKID SECTIONS
F
1/4"=1'-0"
DWG NO | TITLE | REF NUMBER | TITLE
DRAWING TRACEABILITY LIST | REFERENCES | NEXT USED ON | REVISIONS

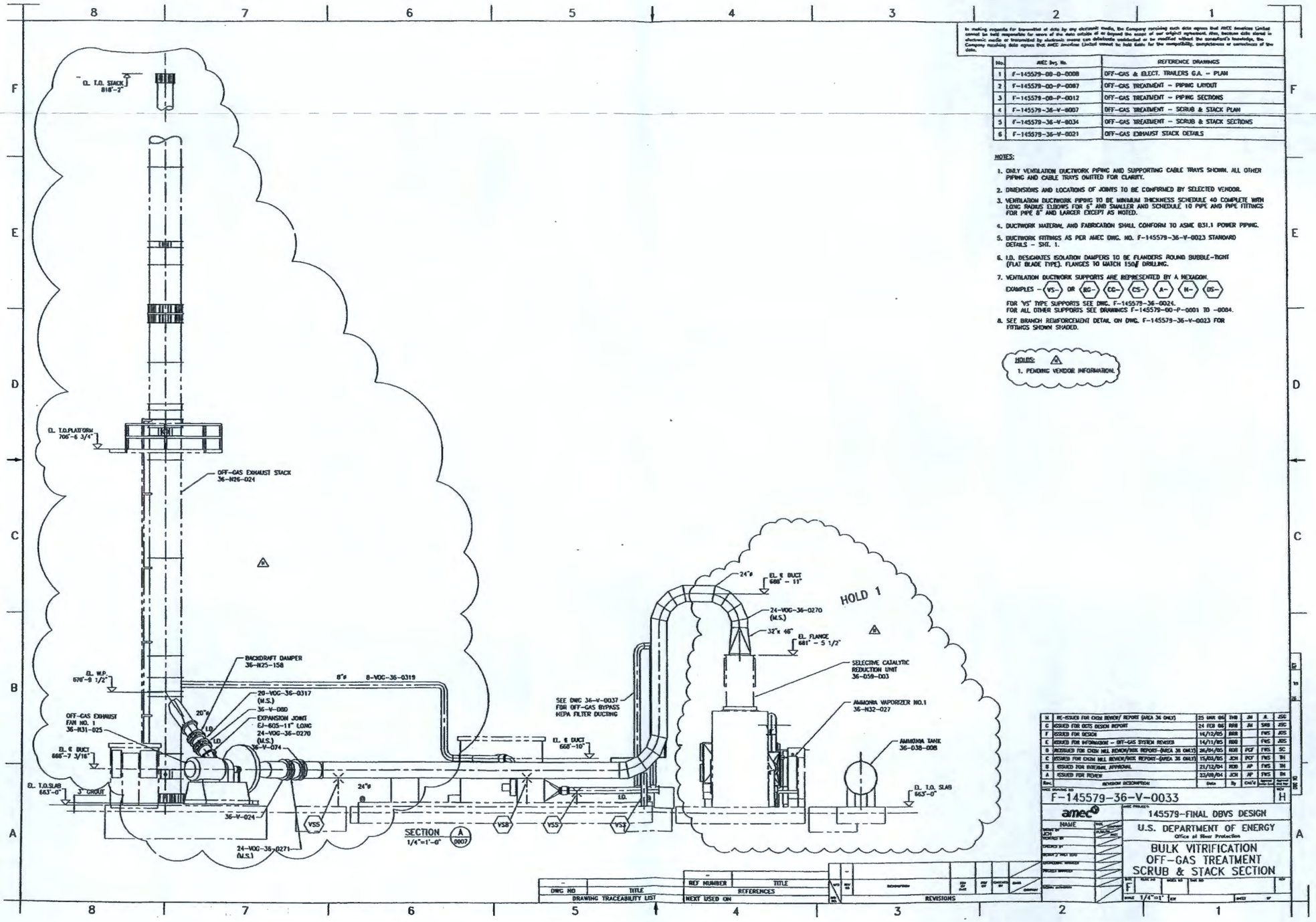

In making requests for transmittal of data by any electronic media, the Company receiving such data agrees that AMEC Americas Limited cannot be held responsible for errors of the data outside of or beyond the scope of our original agreement. Also, because data stored in electronic media or transmitted by electronic means can deteriorate undetected or be modified without the operator's knowledge, the Company receiving data agrees that AMEC Americas Limited cannot be held liable for the compatibility, completeness or correctness of the data.

No.	AMEC Dwg. No.	REFERENCE DRAWINGS
1	F-145579-00-D-0008	OFF-GAS & ELECT. TRAILERS G.A. - PLAN
2	F-145579-00-P-0007	OFF-GAS TREATMENT - PIPING LAYOUT
3	F-145579-00-P-0012	OFF-GAS TREATMENT - PIPING SECTIONS
4	F-145579-36-V-0007	OFF-GAS TREATMENT - SCRUB & STACK PLAN
5	F-145579-36-V-0034	OFF-GAS TREATMENT - SCRUB & STACK SECTIONS
6	F-145579-36-V-0021	OFF-GAS EXHAUST STACK DETAILS

NOTES:

1. ONLY VENTILATION DUCTWORK PIPING AND SUPPORTING CABLE TRAYS SHOWN. ALL OTHER PIPING AND CABLE TRAYS OMITTED FOR CLARITY.
2. DIMENSIONS AND LOCATIONS OF JOINTS TO BE CONFIRMED BY SELECTED VENDOR.
3. VENTILATION DUCTWORK PIPING TO BE MINIMUM THICKNESS SCHEDULE 40 COMPLETE WITH LONG RADIUS ELBOWS FOR 6" AND SMALLER AND SCHEDULE 10 PIPE AND PIPE FITTINGS FOR PIPE 8" AND LARGER EXCEPT AS NOTED.
4. DUCTWORK MATERIAL AND FABRICATION SHALL CONFORM TO ASME B31.1 POWER PIPING.
5. DUCTWORK FITTINGS AS PER AMEC DWG. NO. F-145579-36-V-0023 STANDARD DETAILS - SHT. 1.
6. I.D. DESIGNATES ISOLATION DAMPERS TO BE FLANGERS ROUND BUBBLE-TIGHT (FLAT BLADE TYPE). FLANGES TO MATCH 150# DRILLING.
7. VENTILATION DUCTWORK SUPPORTS ARE REPRESENTED BY A HEXAGON.
   EXAMPLES - VS- OR BG- CC- CS- A- H- DS-
   FOR "VS" TYPE SUPPORTS SEE DWG. F-145579-36-0024.
   FOR ALL OTHER SUPPORTS SEE DRAWINGS F-145579-00-P-0001 TO -0004.
8. SEE BRANCH REINFORCEMENT DETAIL ON DWG. F-145579-36-V-0023 FOR FITTINGS SHOWN SHADED.

HOLDS:
1. PENDING VENDOR INFORMATION.

Rev.	REVISION DESCRIPTION	Date	By	Chk'd	Appr'd	Appr'd Client
H	RE-ISSUED FOR CHEM REVIEW/ REPORT (AREA 36 ONLY)	25 MAR 06	TMB	JM	A.	JSC
G	ISSUED FOR OCTS DESIGN REPORT	24 FEB 06	RHB	JM	SMB	JSC
F	ISSUED FOR DESIGN	14/12/05	RHB		FWS	JDS
E	ISSUED FOR INFORMATION - OFF-GAS SYSTEM REVISED	14/11/05	RHB		FWS	JDS
D	REISSUED FOR CHEM MILL REVIEW/HAZ REPORT-(AREA 36 ONLY)	26/04/05	RDB	PCF	FWS	SC
C	ISSUED FOR CHEM MILL REVIEW/HAZ REPORT-(AREA 36 ONLY)	15/03/05	JCH	PCF	FWS	BH
B	ISSUED FOR INTERNAL APPROVAL	21/12/04	RDB	AP	FWS	BH
A	ISSUED FOR REVIEW	22/08/04	JCH	AP	FWS	BH

DWG DRAWING NO: F-145579-36-V-0033
REV: H
DRAWN BY: JCH
NAME
SCALE: 1/4"=1'
SIZE: F

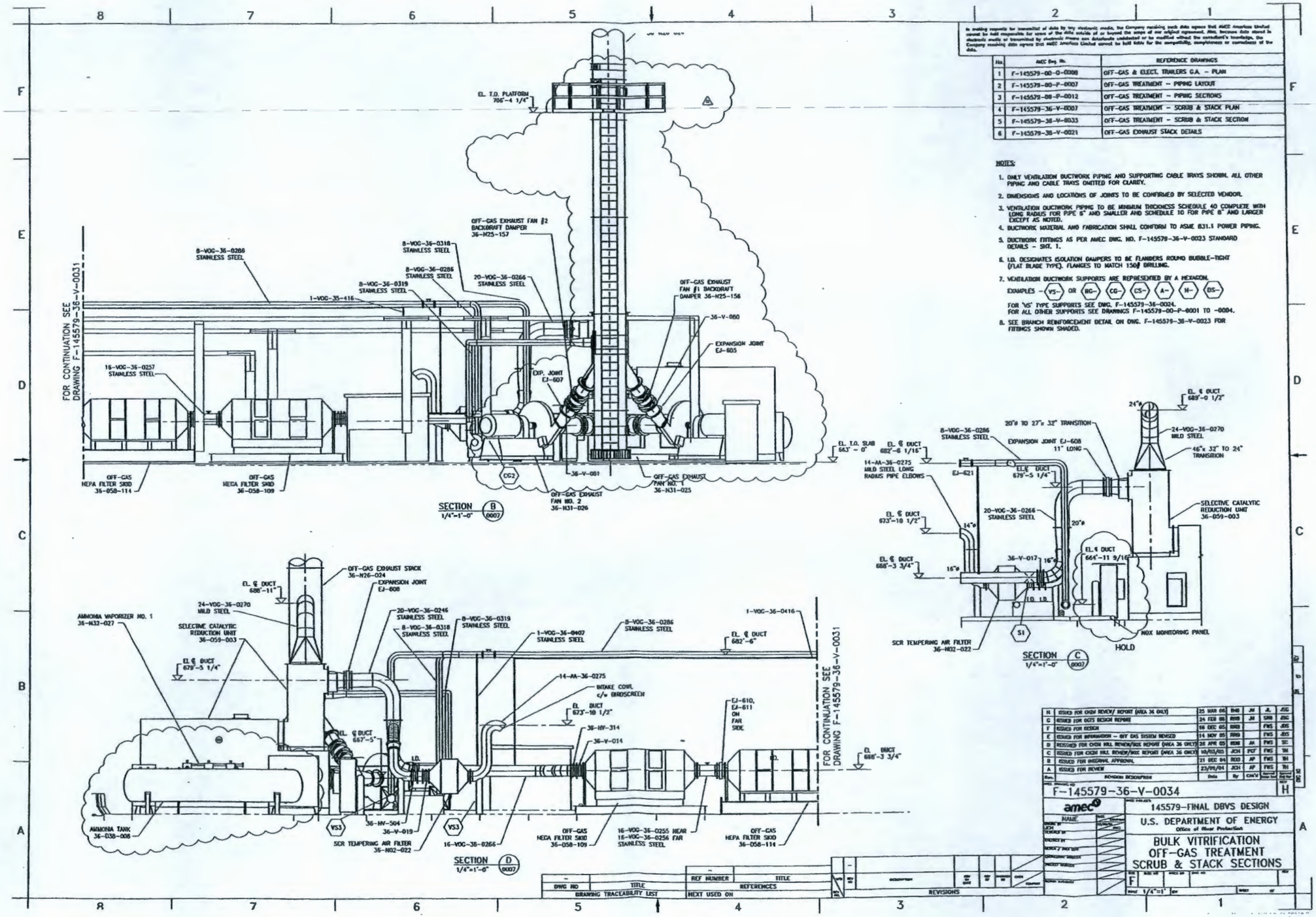

No.	AMEC Dwg. No.	REFERENCE DRAWINGS
1	F-145579-00-D-0008	OFF-GAS & ELECT. TRAILERS G.A. - PLAN
2	F-145579-00-P-0007	OFF-GAS TREATMENT - PIPING LAYOUT
3	F-145579-00-P-0012	OFF-GAS TREATMENT - PIPING SECTIONS
4	F-145579-36-V-0007	OFF-GAS TREATMENT - SCRUB & STACK PLAN
5	F-145579-36-V-0033	OFF-GAS TREATMENT - SCRUB & STACK SECTION
6	F-145579-36-V-0021	OFF-GAS EXHAUST STACK DETAILS

NOTES:

1. ONLY VENTILATION DUCTWORK PIPING AND SUPPORTING CABLE TRAYS SHOWN. ALL OTHER PIPING AND CABLE TRAYS OMITTED FOR CLARITY.
2. DIMENSIONS AND LOCATIONS OF JOINTS TO BE CONFIRMED BY SELECTED VENDOR.
3. VENTILATION DUCTWORK PIPING TO BE MINIMUM THICKNESS SCHEDULE 40 COMPLETE WITH LONG RADIUS FOR PIPE 8" AND SMALLER AND SCHEDULE 10 FOR PIPE 8" AND LARGER EXCEPT AS NOTED.
4. DUCTWORK MATERIAL AND FABRICATION SHALL CONFORM TO ASME B31.1 POWER PIPING.
5. DUCTWORK FITTINGS AS PER AMEC DWG. NO. F-145579-36-V-0023 STANDARD DETAILS - SHT. 1.
6. I.D. DESIGNATES ISOLATION DAMPERS TO BE FLANGERS ROUND BUBBLE-TIGHT (FLAT BLADE TYPE). FLANGES TO MATCH 150# DRILLING.
7. VENTILATION DUCTWORK SUPPORTS ARE REPRESENTED BY A HEXAGON.
   EXAMPLES - VS- OR BG- CG- CS- A- H- DS-
   FOR "VS" TYPE SUPPORTS SEE DWG. F-145579-36-0024.
   FOR ALL OTHER SUPPORTS SEE DRAWINGS F-145579-00-P-0001 TO -0004.
8. SEE BRANCH REINFORCEMENT DETAIL ON DWG. F-145579-36-V-0023 FOR FITTINGS SHOWN SHADED.

Rev.	REVISION DESCRIPTION	Date	By	CHK'D	Approved	Approved
H	ISSUED FOR CHEM REVIEW/ REPORT (AREA 36 ONLY)	25 MAR 06	RHB	JM	JL	JDC
G	ISSUED FOR DCFS DESIGN REPORT	24 FEB 06	RHB	JM	SRB	JDC
F	ISSUED FOR DESIGN	16 DEC 05	RHB		FWS	JDC
E	ISSUED FOR INFORMATION - OFF GAS SYSTEM REVISED	14 NOV 05	RHB		FWS	JDC
D	REISSUED FOR CHEM HAZ. REVIEW/NOX REPORT (AREA 36 ONLY)	28 APR 05	RHB	JM	FWS	TC
C	ISSUED FOR CHEM HAZ. REVIEW/NOX REPORT (AREA 36 ONLY)	18/03/05	JCH	PCF	FWS	TM
B	ISSUED FOR INTERNAL APPROVAL	21 DEC 04	RHB	JP	FWS	TM
A	ISSUED FOR REVIEW	23/09/04	JCH	JP	FWS	TM

Attachment 2

Calculation No. 145579-D-CA-056	**ORIGINATOR:** John Irwin 03-25-2006
Rev. No. : 1	
Calculation Title : DBVS OGTS Bypass System Thermal Hydraulics Analysis	**CHECKER:** Jack McConwell 3-26-06

AFT Arrow Model Input and Output Files

This page intentionally left blank.

Title: AFT Arrow Model, OGTS Bypass System T-H Model Case 1 (Clean Filters, NYB 1508, 115 °F Ambient, HT)
Input File: M:\Demonstration Bulk VIT\Fiscal Year 2006 Work\Calculations\OGTS Bypass Thermal Hydraulics Analysis\Work Files\Bypass Flow 8 Inch Pipe Rev 1 Case 1.aro

Number Of Pipes= 25
Number Of Junctions= 25

Length March Solution Method with Mach Number Limits
Length Step Size= 12 inches
Mach Number Increment= 0.01
Pressure Tolerance= 0.0001 relative change
Mass Flow Rate Tolerance= 0.0001 relative change
Enthalpy Tolerance= 0.0001 relative change
Flow Relaxation= (Automatic)
Pressure Relaxation= (Automatic)
Resistance Relaxation= (Automatic)

Fluid Database: AFT Standard
Fluid: Air
Max Fluid Temperature Data= 1000 deg. K
Min Fluid Temperature Data= 200 deg. K
Molecular Weight =28.97 amu
Gas Constant =0.06855 Btu/lbm-R
Critical Pressure =37.25 atm
Critical Temperature =132.41 deg. K
Acentric Factor =0.021
Equation of State= Redlich-Kwong
Enthalpy Model= Generalized
Specific Heat Ratio Accuracy = High
Atmospheric Pressure= 14.3 psia
Gravitational Acceleration= 1 g
Standard Pressure= 14.696 psia
Standard Temperature= 60 deg. F
Turbulent Flow Above Reynolds Number= 4000
Laminar Flow Below Reynolds Number= 2300

Pipe Input Table

Pipe	Name	Pipe Defined	Length	Length Units	Hydraulic Diameter	Hydraulic Diam. Units	Friction Data Set	Roughness	Roughness Units	Losses (K)	Initial Flow
1	Pipe	Yes	64	inches	6.065	inches	Unspecified	0.00015	feet	2.93	
2	Pipe	Yes	104	inches	6.065	inches	Unspecified	0.00015	feet	0.21	
3	3 FEs	Yes	163	inches	4.026	inches	Unspecified	0.00015	feet	1.635	
4	Pipe	Yes	39	inches	6.065	inches	Unspecified	0.00015	feet	0.16	
5	Pipe	Yes	22	inches	4.025	inches	Unspecified	0.00015	feet	0.32	
6	Pipe	Yes	72	inches	6.065	inches	Unspecified	0.00015	feet	0.15	
7	Pipe	Yes	141.5	inches	5.047	inches	Unspecified	0.00015	feet	0.47	
8	Pipe	Yes	6	inches	6.065	inches	Unspecified	0.00015	feet	0.14	
9	Pipe	Yes	10.5	inches	6.065	inches	Unspecified	0.00015	feet	0	
10	Pipe	Yes	8	inches	6.065	inches	Unspecified	0.00015	feet	0.05	
11	Pipe	Yes	6	inches	6.065	inches	Unspecified	0.00015	feet	0.05	
12	Pipe	Yes	12	inches	6.065	inches	Unspecified	0.00015	feet	1.227941	
13	Pipe	Yes	251	inches	8.329	inches	Unspecified	0.00015	feet	0.39	
14	Pipe	Yes	1969	inches	8.329	inches	Unspecified	0.00015	feet	0.77	
15	Pipe	Yes	277.5	inches	8.329	inches	Unspecified	0.00015	feet	1.32	
16	Pipe	Yes	18	inches	8.329	inches	Unspecified	0.00015	feet	0.43	
17	Pipe	Yes	12	inches	8.329	inches	Unspecified	0.00015	feet	0.11	
18	Pipe	Yes	42	inches	8.329	inches	Unspecified	0.00015	feet	0.11	
19	Pipe	Yes	12	inches	8.329	inches	Unspecified	0.00015	feet	0	
20	Pipe	Yes	564	inches	8.329	inches	Unspecified	0.00015	feet	2.04	
21	Pipe	Yes	104	inches	12.39	inches	Unspecified	0.00015	feet	1.42	
22	Pipe	Yes	6	inches	6.065	inches	Unspecified	0.00015	feet	0.04	
23	Pipe	Yes	268	inches	6.065	inches	Unspecified	0.00015	feet	0.61	

AFT Arrow 3.0 Input (2 of 6) 3/25/2006 10:22 AM
DMJMH+N

AFT Arrow Model, OGTS Bypass System T-H Model Case 1 (Clean Filters, NYB 1508, 115 °F Ambient, HT)

Pipe	Name	Pipe Defined	Length	Length Units	Hydraulic Diameter	Hydraulic Diam. Units	Friction Data Set	Roughness	Roughness Units	Losses (K)	Initial Flow
30	Pipe	Yes	0.5	feet	5.047	inches	Unspecified	0.00015	feet	0	
31	Pipe	Yes	0.5	feet	8.329	inches	Unspecified	0.00015	feet	0	

Pipe	Initial Flow Units	Junctions (Up,Down)	Geometry	Material	Size	Type	Thermal Boundary	Ambient Temp.
1		1, 2	Cylindrical Pipe	Stainless Steel	6 inch	schedule 40	Adiabatic	
2		2, 3	Cylindrical Pipe	Stainless Steel	6 inch	schedule 40	Adiabatic	
3		3, 4	Cylindrical Pipe	Stainless Steel	4 inch	schedule 40	Adiabatic	
4		4, 5	Cylindrical Pipe	Stainless Steel	6 inch	schedule 40	Adiabatic	
5		5, 6	Cylindrical Pipe	Unspecified			Adiabatic	
6		6, 7	Cylindrical Pipe	Stainless Steel	6 inch	schedule 40	General Heat Transfer	115
7		7, 8	Cylindrical Pipe	Stainless Steel	5 inch	schedule 40	General Heat Transfer	115
8		8, 9	Cylindrical Pipe	Stainless Steel	6 inch	schedule 40	General Heat Transfer	115
9		9, 10	Cylindrical Pipe	Stainless Steel	6 inch	schedule 40	General Heat Transfer	115
10		10, 11	Cylindrical Pipe	Stainless Steel	6 inch	schedule 40	General Heat Transfer	115
11		9, 12	Cylindrical Pipe	Stainless Steel	6 inch	schedule 40	General Heat Transfer	115
12		12, 11	Cylindrical Pipe	Stainless Steel	6 inch	schedule 40	General Heat Transfer	115
13		11, 13	Cylindrical Pipe	Stainless Steel	8 inch	schedule 10	General Heat Transfer	115
14		13, 14	Cylindrical Pipe	Stainless Steel	8 inch	schedule 10	General Heat Transfer	115
15		14, 15	Cylindrical Pipe	Stainless Steel	8 inch	schedule 10	General Heat Transfer	115
16		15, 16	Cylindrical Pipe	Stainless Steel	8 inch	schedule 10	General Heat Transfer	115
17		16, 17	Cylindrical Pipe	Stainless Steel	8 inch	schedule 10	General Heat Transfer	115
18		17, 18	Cylindrical Pipe	Stainless Steel	8 inch	schedule 10	General Heat Transfer	115
19		18, 19	Cylindrical Pipe	Stainless Steel	8 inch	schedule 10	General Heat Transfer	115
20		19, 20	Cylindrical Pipe	Stainless Steel	8 inch	schedule 10	General Heat Transfer	115
21		21, 22	Cylindrical Pipe	Stainless Steel	12 inch	schedule 10	Adiabatic	
22		22, 23	Cylindrical Pipe	Stainless Steel	6 inch	schedule 40	Adiabatic	
23		23, 13	Cylindrical Pipe	Stainless Steel	6 inch	schedule 40	Adiabatic	
30		8, 30	Cylindrical Pipe	Stainless Steel	5 inch	schedule 40	Adiabatic	
31		14, 31	Cylindrical Pipe	Stainless Steel	8 inch	schedule 10	Adiabatic	

Pipe	Ambient Temp. Units	Special Condition
1		None
2		None
3		None
4		None
5		None
6	deg. F	None
7	deg. F	None
8	deg. F	None
9	deg. F	None
10	deg. F	None
11	deg. F	None
12	deg. F	None
13	deg. F	None
14	deg. F	None
15	deg. F	None
16	deg. F	None
17	deg. F	None
18	deg. F	None
19	deg. F	None
20	deg. F	None
21		None
22		None
23		None

AFT Arrow 3.0 Input (3 of 6) 3/25/2006 10:22 AM
DMJMH+N
AFT Arrow Model, OGTS Bypass System T-H Model Case 1 (Clean Filters, NYB 1508, 115 °F Ambient, HT)

Pipe	Ambient Temp. Units	Special Condition
30		None
31		None

Pipe Loss Table

Pipe Losses	K Total	Standard Bends	Mitre Bends	Smooth Bends	Angle Valves	Ball Valves	Butterfly Valves	Cylinder Valves	Gate Valves	Globe Valves	Plug Valves	Poppet Valves
12	1.23			1 (0.13)								
13	0.11											
15	1.32											
21	1.42											
22	0.04											
23	0.11											

Pipe Losses	Three-way Valves	Swing Check Valves	Lift Check Valves	Tilting Disc Check Valves	Stop Check Valves	Sharp-edged Orifice	Long Orifice	Contractions	Expansions
12									
13									
15									
21									
22									
23									

Pipe Losses	Entrances	Exits	Differential Flowmeter	Honeycomb	Screen	Tee	Add'l Loss
12						1 (1.1)	
13							(0.11)
15						1 (1.1)	(0.22)
21							(1.42)
22						1 (0.04)	
23							(0.11)

Area Change Table

Area Change	Name	Object Defined	Elevation	Elevation Units	Initial Pressure	Initial Pressure Units	Database Source	Type	Geometry
3	Area Change	Yes	0	feet				Conical	Contraction
4	Area Change	Yes	0	feet				Conical	Expansion
5	Area Change	Yes	0	feet				Conical	Contraction
7	Area Change	Yes	0	feet				Conical	Contraction

Area Change	Angle	Loss Factor
3	22.	0.4399
4	22.	0.1552
5	22.	0.4404
7	28.	0.1241

Compressor/Fan Table

Compressor/Fan	Name	Object Defined	Elevation	Elevation Units	Initial Pressure	Initial Pressure Units	Database Source	Special Condition
17	N31-130	Yes	0	feet				None

Compressor/Fan	Pump Type	Design Flow Rate	Design Flow Rate Units	Current Configuration	Independent Variable	Ind. Variable Units	Dependent Variable
17	Comp./Fan Curve				Vol. Flow Rate	ft3/min	Pressure Loss

AFT Arrow 3.0 Input (4 of 6) 3/25/2006 10:22 AM
DMJMH+N

AFT Arrow Model, OGTS Bypass System T-H Model Case 1 (Clean Filters, NYB 1508, 115 °F Ambient, HT)

Compressor/Fan	Dep. Variable Units	Comp./Fan Curve Constant a	Comp./Fan Curve Constant b	Comp./Fan Curve Constant c	Comp./Fan Curve Constant d	Comp./Fan Curve Constant e
17	in. H2O std.	12.46429	2.571429E-03	-2.285714E-06	0	0

Compressor/Fan	Runout Flow Rate	Runout Flow Rate Units	Added Press. Type	Speed	Control Discharge	Control Discharge Units	Control When Exceeded Only	Compression Process
17			Static	100				Adiabatic

Dead End Table

Dead End	Name	Object Defined	Elevation	Elevation Units	Initial Pressure	Initial Pressure Units	Database Source
30	To Main OGTS	Yes	0	feet			
31	To Train B HEPA	Yes	0	feet			

General Component Table

General Component	Name	Object Defined	Elevation	Elevation Units	Initial Pressure	Initial Pressure Units	Database Source	Special Condition
2	HEPA Filter N02-010	Yes	0	feet				None
16	HEPA Filter 136/137	Yes	0	feet				None
18	Backdraft Damper	Yes	0	feet				None
22	Heater & HEPA Filter	Yes	0	feet				None

General Component	Loss Model	Loss Value	Independent Variable	Ind. Variable Units	Dependent Variable	Dep. Variable Units	Loss Constant a
2	General Polynomial	Variable	Vol. Flow Rate	ft3/min	Pressure Loss	in. H2O std.	-1.165517E-17
16	General Polynomial	Variable	Vol. Flow Rate	ft3/min	Pressure Loss	in. H2O std.	3.534499E-17
18	General Polynomial	Variable	Vol. Flow Rate	ft3/min	Pressure Loss	in. H2O std.	7.923767E-02
22	General Polynomial	Variable	Vol. Flow Rate	ft3/min	Pressure Loss	in. H2O std.	-1.436568E-17

General Component	Loss Constant b	Loss Constant c	Loss Constant d	Loss Constant e
2	0.00224	0	0	0
16	2.826666E-03	0	0	0
18	1.687181E-04	3.4618E-08	0	0
22	0.001382	0	0	0

Heat Exchanger Table

Heat Exchanger	Name	Object Defined	Elevation	Elevation Units	Initial Pressure	Initial Pressure Units	Database Source	Special Condition	Type
6	ICV Plenum	Yes	0	feet				None	

Heat Exchanger	Loss Model	Loss Value	Independent Variable	Ind. Variable Units	Dependent Variable	Dep. Variable Units	Loss Constant a	Loss Constant b	Loss Constant c
6	K Constant	1.5							

Heat Exchanger	Loss Constant d	Loss Constant e
6		

Tank Table

Tank	Name	Object Defined	Elevation	Elevation Units	Initial Pressure	Initial Pressure Units	Database Source	Pressure	Pressure Units	Temperature
1	Atm Pres	Yes	0	feet				14.3	psia	115
20	Atm Pres	Yes	0	feet				14.3	psia	115
21	Atm Pres	Yes	0	feet				14.3	psia	115

AFT Arrow 3.0 Input (5 of 6) 3/25/2006 10:22 AM
DMJMH+N

AFT Arrow Model, OGTS Bypass System T-H Model Case 1 (Clean Filters, NYB 1508, 115 °F Ambient, HT)

Tank	Temperature Units	Balance Energy	Balance Concentration	(Pipe #1) K In, K Out	(Pipe #2) K In, K Out	(Pipe #3) K In, K Out	(Pipe #4) K In, K Out	(Pipe #5) K In, K Out	(Pipe #6) K In, K Out
1	deg. F	No	No	(P1) 0, 0					
20	deg. F	No	No	(P20) 0, 0					
21	deg. F	No	No	(P21) 0, 0					

Tank	(Pipe #7) K In, K Out	(Pipe #8) K In, K Out	(Pipe #9) K In, K Out	(Pipe #10) K In, K Out	(Pipe #11) K In, K Out	(Pipe #12) K In, K Out	(Pipe #13) K In, K Out	(Pipe #14) K In, K Out	(Pipe #15) K In, K Out
1									
20									
21									

Tank	(Pipe #16) K In, K Out	(Pipe #17) K In, K Out	(Pipe #18) K In, K Out	(Pipe #19) K In, K Out	(Pipe #20) K In, K Out	(Pipe #21) K In, K Out	(Pipe #22) K In, K Out	(Pipe #23) K In, K Out	(Pipe #24) K In, K Out
1									
20									
21									

Tank	(Pipe #25) K In, K Out
1	
20	
21	

Tee or Wye Table

Tee or Wye	Name	Object Defined	Elevation	Elevation Units	Initial Pressure	Initial Pressure Units	Database Source	Tee/Wye Type	Loss Type
8	Tee or Wye	Yes	0	feet				Round Straight	Detailed
9	Tee or Wye	Yes	0	feet				Round Straight	Detailed
11	Tee or Wye	Yes	0	feet				Round Straight	Detailed
13	Tee or Wye	Yes	0	feet				Round Straight	Detailed
14	Tee or Wye	Yes	0	feet				Round Straight	Detailed

Tee or Wye	Angle	Pipes A, B, C
8	135	
9	150	
11	30	
13	45	
14	135	

Valve Table

Valve	Name	Object Defined	Elevation	Elevation Units	Initial Pressure	Initial Pressure Units	Database Source	Special Condition	Exit Valve	Exit Pressure
10	HV-901	Yes	0	feet				None	No	
12	HV-902	Yes	0	feet				None	No	
15	V-166	Yes	0	feet				None	No	
19	V-167	Yes	0	feet				None	No	
23	V-178	Yes	0	feet				None	No	

Valve	Exit Pressure Units	CdA	CdA Units	Loss Model	Loss Value	Independent Variable	Ind. Variable Units	Dependent Variable	Dep. Variable Units	Loss Constant a
10				Cv Constant	1194					
12				Cv Constant	1194					
15				Cv Constant	2440					
19				Cv Constant	2440					
23				Cv Constant	300					

AFT Arrow 3.0 Input (6 of 6) 3/25/2006 10:22 AM
DMJMH+N

AFT Arrow Model, OGTS Bypass System T-H Model Case 1 (Clean Filters, NYB 1508, 115 °F Ambient, HT)

Valve	Loss Constant b	Loss Constant c	Loss Constant d	Loss Constant e
10				
12				
15				
19				
23				

AFT Arrow 3.0 Output (1 of 5) 3/25/2006
DMJMH+N
AFT Arrow Model, OGTS Bypass System T-H Model Case 1 (Clean Filters, NYB 1508, 115 °F Ambient, HT)

Title: AFT Arrow Model, OGTS Bypass System T-H Model Case 1 (Clean Filters, NYB 1508, 115 °F Ambient, HT)
Analysis run on: 3/25/2006 10:12:58 AM
Application version: AFT Arrow Version 3.0 (2005.09.14)
Input File: M:\Demonstration Bulk VIT\Fiscal Year 2006 Work\Calculations\OGTS Bypass Thermal Hydraulics Analysis\Work Files\Bypass Flow 8 Inch Pipe Rev 1 Case 1.aro

Execution Time= 1:46.86 (106.86 seconds)
Total Number Of Pressure Iterations= 573
Total Number Of Flow Iterations= 195
Total Number Of Enthalpy Iterations= 195
Number Of Pipes= 25
Number Of Junctions= 25
Matrix Method= Gaussian Elimination

Length March Solution Method with Mach Number Limits
Length Step Size= 12 inches
Mach Number Increment= 0.01
Pressure Tolerance= 0.0001 relative change
Mass Flow Rate Tolerance= 0.0001 relative change
Enthalpy Tolerance= 0.0001 relative change
Flow Relaxation= (Automatic)
Pressure Relaxation= (Automatic)
Resistance Relaxation= (Automatic)

Fluid Database: AFT Standard
Fluid: Air
Max Fluid Temperature Data= 1000 deg. K
Min Fluid Temperature Data= 200 deg. K
Molecular Weight =28.97 amu
Gas Constant =0.06855 Btu/lbm-R
Critical Pressure =37.25 atm
Critical Temperature =132.41 deg. K
Acentric Factor =0.021
Equation of State= Redlich-Kwong
Enthalpy Model= Generalized
Specific Heat Ratio Accuracy = High
Atmospheric Pressure= 14.3 psia
Gravitational Acceleration= 1 g
Standard Pressure= 14.696 psia
Standard Temperature= 60 deg. F
Turbulent Flow Above Reynolds Number= 4000
Laminar Flow Below Reynolds Number= 2300
Total Inflow= 0.9635 lbm/sec
Total Outflow= 0.9635 lbm/sec
Total Energy Inflow= 273.2 Btu/s
Total Energy Outflow= 210.4 Btu/s
Total Heat Transferred Into System= -62.79 Btu/s
Maximum Pressure is 14.35 psia at Junction 17 Outlet
Minimum Pressure is 13.84 psia at Junction 17 Inlet
Maximum Static Temperature is 875.0 deg. F at Junction 6 Outlet
Minimum Static Temperature is 115.0 deg. F at Junction 23 Outlet

Compressor/Fan Summary

Jct	Name	Mass Flow (scfm)	Vol. Flow (ft3/min)	DP Stag. (in. H2O std.)	DP Static (in. H2O std.)	Overall Efficiency (Percent)	Speed (Percent)	Overall Power (hp)	Comp. Ratio (Percent)	BEP Q (ft3/sec)	BEP Mass (lbm/sec)
17	N31-130	756.8	980.2	13.99	13.99	67.40	100.0	3.157	103.6	N/A	N/A

Jct	% of BEP (Percent)
17	N/A

Valve Summary

AFT Arrow 3.0 Output (2 of 5) 3/25/2006
DMJMH+N

AFT Arrow Model, OGTS Bypass System T-H Model Case 1 (Clean Filters, NYB 1508, 115 °F Ambient, HT)

Jct	Name	Valve Type	Mass Flow (lbm/sec)	DP Stag (psid)	DP Static (psid)	P Static Inlet (psia)	K	Valve State	Cv	Cv Est.
10	HV-901	REGULAR	0.31221	0.0070396	0.0070437	14.06	0.8584	Open	1,194.0	N/A
12	HV-902	REGULAR	0.07260	0.0004217	0.0004217	14.06	0.9519	Open	1,194.0	N/A
15	V-166	REGULAR	0.96353	0.0091573	0.0091650	13.96	0.7770	Open	2,440.0	N/A
19	V-167	REGULAR	0.96353	0.0090172	0.0090245	14.33	0.7770	Open	2,440.0	N/A
23	V-178	REGULAR	0.57869	0.1841163	0.1842918	14.26	13.7426	Open	300.0	N/A

Heat Exchanger Summary

Jct	Name	Mass Flow (lbm/sec)	DPo (psid)	DP (psid)	DT Loss (deg. F)	T Inlet (deg. F)	T Outlet (deg. F)	Heat Rate In (Btu/s)
6	ICV Plenum	0.3848	0.04625	0.02933	-760.0	114.6	874.6	72.25

Pipe Output Table

Pipe	Name	Mass Flow (scfm)	Vol. Flow Avg (ft3/min)	Vel. In (feet/sec)	Vel. Out (feet/min)	Mach # In	Mach # Out	dP Stag. Total (in. H2O std.)	P Stag. In (in. H2O std. (g))	P Stag. Out (in. H2O std. (g))
1	Pipe	302.28	344.0	28.55	1,715.4	0.024385	0.024417	0.5149788	0.0000	-0.51497877
2	Pipe	302.28	344.9	28.65	1,719.0	0.024465	0.024471	0.0918134	-1.2859	-1.37775564
3	3 FEs	302.28	346.3	65.12	3,928.2	0.055627	0.055921	2.0711608	-1.4500	-3.52111602
4	Pipe	302.28	347.0	28.82	1,729.2	0.024613	0.024616	0.0480714	-3.6533	-3.70133734
5	Pipe	302.28	347.6	65.54	3,936.0	0.055985	0.056038	0.3658546	-3.7741	-4.13991928
6	Pipe	302.28	795.3	67.30	3,889.8	0.037888	0.037178	0.1455076	-5.4202	-5.56569386
7	Pipe	302.28	756.3	93.70	5,265.6	0.053743	0.052032	0.7659742	-5.6118	-6.37778568
8	Pipe	302.28	730.0	60.73	3,633.6	0.036001	0.035952	0.0554101	-6.3778	-6.43319607
9	Pipe	245.24	589.5	49.12	2,929.8	0.029159	0.029074	0.0078931	-6.4177	-6.42559338
10	Pipe	245.24	586.8	48.86	2,918.4	0.029088	0.029024	0.0173173	-6.6205	-6.63778305
11	Pipe	57.03	137.0	11.42	680.4	0.006781	0.006757	0.0009239	-6.6374	-6.63831091
12	Pipe	57.03	135.6	11.34	671.4	0.006757	0.006710	0.0155750	-6.6500	-6.66558027
13	Pipe	302.28	681.0	31.72	1,696.8	0.018944	0.017873	0.0898071	-6.6383	-6.72811794
14	Pipe	756.85	1,078.0	51.53	2,606.4	0.038125	0.035055	1.7742587	-6.7496	-8.52383900
15	Pipe	756.85	979.8	43.44	2,572.8	0.035055	0.034856	0.6301547	-8.5238	-9.15399361
16	Pipe	756.85	973.9	42.91	2,573.4	0.034879	0.034877	0.1531104	-9.4075	-9.56058025
17	Pipe	756.85	980.5	43.20	2,590.8	0.035128	0.035122	0.0446396	-12.3129	-12.35751152
18	Pipe	756.85	959.6	42.32	2,533.2	0.034153	0.034119	0.0644911	1.6294	1.56486714
19	Pipe	756.85	958.9	42.25	2,533.8	0.034142	0.034132	0.0082891	1.2921	1.28380406
20	Pipe	756.85	947.7	42.25	2,474.4	0.034153	0.033782	1.0342342	1.0342	-0.00002640
21	Pipe	454.56	516.8	10.29	617.4	0.008784	0.008785	0.0338955	0.0000	-0.03389547
22	Pipe	454.56	518.1	43.04	2,582.4	0.036755	0.036758	0.0218578	-0.7481	-0.76996034
23	Pipe	454.56	525.2	43.60	2,619.6	0.037239	0.037291	0.5467624	-5.8664	-6.41318607
30	Pipe	0.00	0.0	0.00	0.0	0.000000	0.000000	0.0000000	-6.3778	-6.37778568
31	Pipe	0.00	0.0	0.00	0.0	0.000000	0.000000	0.0000000	-8.5238	-8.52383900

Pipe	P Static In (in. H2O std. (g))	P Static Out (in. H2O std. (g))	dT Stag. (deg. F)	T Stag. Inlet (deg. F)	T Stag. Outlet (deg. F)	T Static In (deg. F)	T Static Out (deg. F)	dH Stag. (Btu/lbm)	H Stag. In (Btu/lbm)	H Stag. Out (Btu/lbm)
1	-0.16364	-0.67883	0.00000000	115.0	115.0	114.9	114.9	0.00000	206.1	206.1
2	-1.45011	-1.54198	-0.00006104	115.0	115.0	114.9	114.9	0.00000	206.1	206.1
3	-2.29745	-4.37310	-0.00164795	115.0	115.0	114.7	114.6	0.00000	206.1	206.1
4	-3.81844	-3.86654	0.00000000	115.0	115.0	114.9	114.9	0.00000	206.1	206.1
5	-4.62744	-4.99412	-0.00024414	115.0	115.0	114.6	114.6	0.00000	206.1	206.1
6	-5.80597	-5.93728	-49.58715620	875.0	825.4	874.6	825.1	-12.39724	393.8	381.4
7	-6.38769	-7.10445	-83.70727539	825.4	741.7	824.7	741.1	-20.88008	381.4	360.5
8	-6.72587	-6.78031	-3.50280762	741.7	738.2	741.4	737.9	-0.87246	360.5	359.7

AFT Arrow 3.0 Output (3 of 5) 3/25/2006
DMJMH+N

AFT Arrow Model, OGTS Bypass System T-H Model Case 1 (Clean Filters, NYB 1508, 115 °F Ambient, HT)

Pipe	P Static In (in. H2O std. (g))	P Static Out (in. H2O std. (g))	dT Stag. (deg. F)	T Stag. Inlet (deg. F)	T Stag. Outlet (deg. F)	T Static In (deg. F)	T Static Out (deg. F)	dH Stag. (Btu/lbm)	H Stag. In (Btu/lbm)	H Stag. Out (Btu/lbm)
9	-6.64610	-6.65265	-6.96520996	738.2	731.2	738.0	731.0	-1.73454	359.7	357.9
10	-6.84765	-6.86396	-5.25341797	731.2	726.0	731.0	725.8	-1.30798	357.9	356.6
11	-6.64974	-6.65059	-8.46142578	738.2	729.7	738.2	729.7	-2.10707	359.7	357.6
12	-6.66228	-6.67767	-16.56591797	729.7	713.2	729.7	713.2	-4.12364	357.6	353.4
13	-6.73469	-6.81404	-128.68505859	723.6	594.9	723.5	594.8	-31.96418	356.0	324.1
14	-7.14175	-8.85440	-123.26121521	307.6	184.3	307.4	184.2	-30.19798	253.2	223.0
15	-8.85440	-9.48030	-9.26177979	184.3	175.0	184.2	174.9	-2.26422	223.0	220.7
16	-9.73399	-9.88694	-0.55596924	175.0	174.5	174.9	174.3	-0.13588	220.7	220.6
17	-12.64158	-12.68609	-0.36773682	174.5	174.1	174.3	174.0	-0.08988	220.6	220.5
18	1.30735	1.24357	-1.48486328	184.1	182.6	184.0	182.5	-0.36306	222.9	222.6
19	0.97056	0.96248	-0.41833496	182.6	182.2	182.5	182.1	-0.10228	222.6	222.5
20	0.71268	-0.31385	-16.99127197	182.2	165.2	182.1	165.1	-4.15319	222.5	218.3
21	-0.02125	-0.05515	0.00036621	115.0	115.0	115.0	115.0	0.00000	206.1	206.1
22	-1.11905	-1.14094	-0.00006104	115.0	115.0	114.8	114.8	0.00000	206.1	206.1
23	-6.24226	-6.78955	-0.00048828	115.0	115.0	114.8	114.8	0.00000	206.1	206.1
30	-6.37779	-6.37779	0.00000000	741.7	741.7	741.7	741.7	0.00000	360.5	360.5
31	-8.52384	-8.52384	0.00000000	184.3	184.3	184.3	184.3	0.00000	223.0	223.0

Pipe	H Static In (Btu/lbm)	H Static Out (Btu/lbm)	Rho Stag. In (lbm/ft3)	Rho Stag. Out (lbm/ft3)	Heat Transfer Model	Heat Flux (Btu/s-ft2)	Heat Rate (Btu/s)
1	206.0	206.0	0.06719	0.06711	Adiabatic	0.00000	0.00000
2	206.0	206.0	0.06696	0.06696	Adiabatic	0.00000	0.00000
3	206.0	206.0	0.06695	0.06660	Adiabatic	0.00000	0.00000
4	206.0	206.0	0.06657	0.06657	Adiabatic	0.00000	0.00000
5	206.0	206.0	0.06655	0.06649	Adiabatic	0.00000	0.00000
6	393.7	381.3	0.02852	0.02961	Gen'l Heat Tran.	-0.50078	-4.77086
7	381.2	360.4	0.02961	0.03161	Gen'l Heat Tran.	-0.51574	-8.03533
8	360.5	359.6	0.03161	0.03170	Gen'l Heat Tran.	-0.42291	-0.33575
9	359.6	357.9	0.03170	0.03188	Gen'l Heat Tran.	-0.38979	-0.54155
10	357.9	356.6	0.03187	0.03200	Gen'l Heat Tran.	-0.38578	-0.40837
11	359.7	357.6	0.03168	0.03190	Gen'l Heat Tran.	-0.19269	-0.15298
12	357.6	353.4	0.03190	0.03235	Gen'l Heat Tran.	-0.18855	-0.29939
13	356.0	324.0	0.03207	0.03598	Gen'l Heat Tran.	-0.26970	-12.30086
14	253.1	223.0	0.04945	0.05866	Gen'l Heat Tran.	-0.08132	-29.09655
15	223.0	220.7	0.05866	0.05942	Gen'l Heat Tran.	-0.04327	-2.18163
16	220.7	220.6	0.05938	0.05941	Gen'l Heat Tran.	-0.04003	-0.13092
17	220.6	220.5	0.05899	0.05901	Gen'l Heat Tran.	-0.03972	-0.08660
18	222.9	222.5	0.06022	0.06034	Gen'l Heat Tran.	-0.04584	-0.34982
19	222.5	222.4	0.06030	0.06034	Gen'l Heat Tran.	-0.04519	-0.09855
20	222.4	218.3	0.06030	0.06178	Gen'l Heat Tran.	-0.03905	-4.00171
21	206.1	206.1	0.06719	0.06719	Adiabatic	0.00000	0.00000
22	206.0	206.0	0.06707	0.06706	Adiabatic	0.00000	0.00000
23	206.0	206.0	0.06620	0.06611	Adiabatic	0.00000	0.00000
30	360.5	360.5	0.03161	0.03161	Adiabatic	0.00000	0.00000
31	223.0	223.0	0.05866	0.05866	Adiabatic	0.00000	0.00000

All Junction Table

Jct	Name	Mass Flow Thru Junction (scfm)	dP Stag. Total (in. H2O std.)	P Stag. In (in. H2O std. (g))	P Stag. Out (in. H2O std. (g))	P Static In (in. H2O std. (g))	P Static Out (in. H2O std. (g))
1	Atm Pres	302.28	0.00000	0.00000	0.0000	0.00000	0.0000
2	HEPA Filter N02-010	302.28	0.77096	-0.51498	-1.2859	-0.67883	-1.4501
3	Area Change	302.28	0.07220	-1.37776	-1.4500	-1.54198	-2.2974

AFT Arrow 3.0 Output (4 of 5) 3/25/2006
DMJMH+N

AFT Arrow Model, OGTS Bypass System T-H Model Case 1 (Clean Filters, NYB 1508, 115 °F Ambient, HT)

Jct	Name	Mass Flow Thru Junction (scfm)	dP Stag. Total (in. H2O std.)	P Stag. In (in. H2O std. (g))	P Stag. Out (in. H2O std. (g))	P Static In (in. H2O std. (g))	P Static Out (in. H2O std. (g))
4	Area Change	302.28	0.13214	-3.52112	-3.6533	-4.37310	-3.8184
5	Area Change	302.28	0.07273	-3.70134	-3.7741	-3.86654	-4.6274
6	ICV Plenum	302.28	1.28028	-4.13992	-5.4202	-4.99412	-5.8060
7	Area Change	302.28	0.04610	-5.56569	-5.6118	-5.93728	-6.3877
8	Tee or Wye	N/A	0.00000	-6.37779	-6.3778	-6.89796	-6.8980
9	Tee or Wye	N/A	See Losses	-6.43306	-6.4331	-6.68203	-6.6820
10	HV-901	245.24	0.19486	-6.42559	-6.6205	-6.65265	-6.8477
11	Tee or Wye	N/A	See Losses	-6.63831	-6.6383	-6.76687	-6.7669
12	HV-902	57.03	0.01167	-6.63831	-6.6500	-6.65059	-6.6623
13	Tee or Wye	N/A	See Losses	-6.74958	-6.7496	-7.05826	-7.0583
14	Tee or Wye	N/A	0.00000	-8.52384	-8.5238	-8.85440	-8.8544
15	V-166	756.85	0.25348	-9.15399	-9.4075	-9.48030	-9.7340
16	HEPA Filter 136/137	756.85	2.75229	-9.56058	-12.3129	-9.88694	-12.6416
17	N31-130	756.85	-13.98687	-12.35751	1.6294	-12.68609	1.3074
18	Backdraft Damper	756.85	0.27278	1.56487	1.2921	1.24357	0.9706
19	V-167	756.85	0.24960	1.28380	1.0342	0.96248	0.7127
20	Atm Pres	756.85	0.00000	0.00000	0.0000	0.00000	0.0000
21	Atm Pres	454.56	0.00000	0.00000	0.0000	0.00000	0.0000
22	Heater & HEPA Filter	454.56	0.71421	-0.03390	-0.7481	-0.05515	-1.1191
23	V-178	454.56	5.09646	-0.76996	-5.8664	-1.14094	-6.2423
30	To Main OGTS	0.00	0.00000	-6.37779	-6.3778	-6.37779	-6.3778
31	To Train B HEPA	0.00	0.00000	-8.52384	-8.5238	-8.52384	-8.5238

Jct	dT Stag. (deg. F)	T Stag. Inlet (deg. F)	T Stag. Outlet (deg. F)	T Static In (deg. F)	T Static Out (deg. F)	dH Stag. (Btu/lbm)	H Stag. In (Btu/lbm)	H Stag. Out (Btu/lbm)	H Static In (Btu/lbm)	H Static Out (Btu/lbm)	Sonic Area (feet2)
1	0.0000000	115.0	115.0	115.0	115.0	0.000	206.1	206.1	206.1	206.1	0.008442
2	-0.0006104	115.0	115.0	114.9	114.9	0.000	206.1	206.1	206.0	206.0	0.008453
3	-0.0004883	115.0	115.0	114.9	114.7	0.000	206.1	206.1	206.0	206.0	0.008472
4	0.0002441	115.0	115.0	114.6	114.9	0.000	206.1	206.1	206.0	206.0	0.008518
5	-0.0004883	115.0	115.0	114.9	114.6	0.000	206.1	206.1	206.0	206.0	0.008522
6	759.9999542	115.0	875.0	114.6	874.6	-187.755	206.1	393.8	206.0	393.7	0.008532
7	0.0001221	825.4	825.4	825.1	824.7	0.000	381.4	381.4	381.3	381.2	0.012848
8	0.0000000	741.7	741.7	741.3	741.3	N/A	360.5	360.5	360.4	360.4	N/A
9	0.0000000	738.2	738.2	738.0	738.0	N/A	359.7	359.7	359.6	359.6	N/A
10	0.0000000	731.2	731.2	731.0	731.0	0.000	357.9	357.9	357.9	357.9	0.010052
11	0.0000000	723.6	723.6	723.5	723.5	N/A	356.0	356.0	356.0	356.0	N/A
12	0.0000000	729.7	729.7	729.7	729.7	0.000	357.6	357.6	357.6	357.6	0.002337
13	0.0000000	307.6	307.6	307.4	307.4	N/A	253.2	253.2	253.2	253.2	N/A
14	0.0000000	184.3	184.3	184.2	184.2	N/A	223.0	223.0	223.0	223.0	N/A
15	-0.0001831	175.0	175.0	174.9	174.9	0.000	220.7	220.7	220.7	220.7	0.022748
16	-0.0017090	174.5	174.5	174.3	174.3	0.000	220.6	220.6	220.6	220.6	0.022761
17	10.0006714	174.1	184.1	174.0	184.0	-2.443	220.5	222.9	220.5	222.9	0.022921
18	-0.0001831	182.6	182.6	182.5	182.5	0.000	222.6	222.6	222.5	222.5	0.022267
19	-0.0001221	182.2	182.2	182.1	182.1	0.000	222.5	222.5	222.4	222.4	0.022275
20	0.0000000	115.0	115.0	115.0	115.0	0.000	206.1	206.1	206.1	206.1	0.022048
21	0.0000000	115.0	115.0	115.0	115.0	0.000	206.1	206.1	206.1	206.1	0.012695
22	-0.0007324	115.0	115.0	115.0	114.8	0.000	206.1	206.1	206.1	206.0	0.012696
23	-0.0040894	115.0	115.0	114.8	114.8	0.000	206.1	206.1	206.0	206.0	0.012720
30	0.0000000	741.7	741.7	741.7	741.7	0.000	360.5	360.5	360.5	360.5	0.000000
31	0.0000000	184.3	184.3	184.3	184.3	0.000	223.0	223.0	223.0	223.0	0.000000

Junction Loss Table

AFT Arrow 3.0 Output (5 of 5) 3/25/2008
DMJMH+N

AFT Arrow Model, OGTS Bypass System T-H Model Case 1 (Clean Filters, NYB 1508, 115 °F Ambient, HT)

Jct	Pipe #	Pipe Dir.	dP Stag. Total (in. H2O std.)
8	P7	In	0.000
	P30	Out	0.000
	P8	Out	0.000
9	P8	In	0.000
	P9	Out	-0.01539
	P11	Out	0.2043
11	P10	In	5.167E-04
	P13	Out	0.000
	P12	In	-0.02727
13	P13	In	0.02147
	P14	Out	0.000
	P23	In	0.3364
14	P14	In	0.000
	P15	Out	0.000
	P31	Out	0.000

Title: AFT Arrow Model, OGTS Bypass System T-H Model Case 2 (Clean Filters, NYB 1508, 115 °F Ambient, HT)
Input File: M:\Demonstration Bulk VIT\Fiscal Year 2006 Work\Calculations\OGTS Bypass Thermal Hydraulics Analysis\Work Files\Bypass Flow 8 inch Pipe Rev 1 Case 1.aro

Number Of Pipes= 25
Number Of Junctions= 25

Length March Solution Method with Mach Number Limits
Length Step Size= 12 inches
Mach Number Increment= 0.01
Pressure Tolerance= 0.0001 relative change
Mass Flow Rate Tolerance= 0.0001 relative change
Enthalpy Tolerance= 0.0001 relative change
Flow Relaxation= (Automatic)
Pressure Relaxation= (Automatic)
Resistance Relaxation= (Automatic)

Fluid Database: AFT Standard
Fluid: Air
Max Fluid Temperature Data= 1000 deg. K
Min Fluid Temperature Data= 200 deg. K
Molecular Weight =28.97 amu
Gas Constant =0.06855 Btu/lbm-R
Critical Pressure =37.25 atm
Critical Temperature =132.41 deg. K
Acentric Factor =0.021
Equation of State= Redlich-Kwong
Enthalpy Model= Generalized
Specific Heat Ratio Accuracy = High
Atmospheric Pressure= 14.3 psia
Gravitational Acceleration= 1 g
Standard Pressure= 14.696 psia
Standard Temperature= 60 deg. F
Turbulent Flow Above Reynolds Number= 4000
Laminar Flow Below Reynolds Number= 2300

Pipe Input Table

Pipe	Name	Pipe Defined	Length	Length Units	Hydraulic Diameter	Hydraulic Diam. Units	Friction Data Set	Roughness	Roughness Units	Losses (K)	Initial Flow
1	Pipe	Yes	64	inches	6.065	inches	Unspecified	0.00015	feet	2.93	
2	Pipe	Yes	104	inches	6.065	inches	Unspecified	0.00015	feet	0.21	
3	3 FEs	Yes	163	inches	4.026	inches	Unspecified	0.00015	feet	1.635	
4	Pipe	Yes	39	inches	6.065	inches	Unspecified	0.00015	feet	0.16	
5	Pipe	Yes	22	inches	4.025	inches	Unspecified	0.00015	feet	0.32	
6	Pipe	Yes	72	inches	6.065	inches	Unspecified	0.00015	feet	0.15	
7	Pipe	Yes	141.5	inches	5.047	inches	Unspecified	0.00015	feet	0.47	
8	Pipe	Yes	6	inches	6.065	inches	Unspecified	0.00015	feet	0.14	
9	Pipe	Yes	10.5	inches	6.065	inches	Unspecified	0.00015	feet	0	
10	Pipe	Yes	8	inches	6.065	inches	Unspecified	0.00015	feet	0.05	
11	Pipe	Yes	6	inches	6.065	inches	Unspecified	0.00015	feet	0.05	
12	Pipe	Yes	12	inches	6.065	inches	Unspecified	0.00015	feet	1.227941	
13	Pipe	Yes	251	inches	8.329	inches	Unspecified	0.00015	feet	0.11	
14	Pipe	Yes	1969	inches	8.329	inches	Unspecified	0.00015	feet	0.77	
15	Pipe	Yes	277.5	inches	8.329	inches	Unspecified	0.00015	feet	1.32	
16	Pipe	Yes	18	inches	8.329	inches	Unspecified	0.00015	feet	0.43	
17	Pipe	Yes	12	inches	8.329	inches	Unspecified	0.00015	feet	0.11	
18	Pipe	Yes	42	inches	8.329	inches	Unspecified	0.00015	feet	0.11	
19	Pipe	Yes	12	inches	8.329	inches	Unspecified	0.00015	feet	0	
20	Pipe	Yes	564	inches	8.329	inches	Unspecified	0.00015	feet	2.04	
21	Pipe	Yes	104	inches	12.39	inches	Unspecified	0.00015	feet	1.42	
22	Pipe	Yes	6	inches	6.065	inches	Unspecified	0.00015	feet	0.04	
23	Pipe	Yes	268	inches	6.065	inches	Unspecified	0.00015	feet	0.11	

AFT Arrow 3.0 Input (2 of 6) 3/25/2006 10:25 AM
DMJMH+N

AFT Arrow Model, OGTS Bypass System T-H Model Case 2 (Clean Filters, NYB 150B, 115 °F Ambient, HT)

Pipe	Name	Pipe Defined	Length	Length Units	Hydraulic Diameter	Hydraulic Diam. Units	Friction Data Set	Roughness	Roughness Units	Losses (K)	Initial Flow
30	Pipe	Yes	0.5	feet	5.047	inches	Unspecified	0.00015	feet	0	
31	Pipe	Yes	0.5	feet	8.329	inches	Unspecified	0.00015	feet	0	

Pipe	Initial Flow Units	Junctions (Up,Down)	Geometry	Material	Size	Type	Thermal Boundary	Ambient Temp.
1		1, 2	Cylindrical Pipe	Stainless Steel	6 inch	schedule 40	Adiabatic	
2		2, 3	Cylindrical Pipe	Stainless Steel	6 inch	schedule 40	Adiabatic	
3		3, 4	Cylindrical Pipe	Stainless Steel	4 inch	schedule 40	Adiabatic	
4		4, 5	Cylindrical Pipe	Stainless Steel	6 inch	schedule 40	Adiabatic	
5		5, 6	Cylindrical Pipe	Unspecified			Adiabatic	
6		6, 7	Cylindrical Pipe	Stainless Steel	6 inch	schedule 40	General Heat Transfer	115
7		7, 8	Cylindrical Pipe	Stainless Steel	5 inch	schedule 40	General Heat Transfer	115
8		8, 9	Cylindrical Pipe	Stainless Steel	6 inch	schedule 40	General Heat Transfer	115
9		9, 10	Cylindrical Pipe	Stainless Steel	6 inch	schedule 40	General Heat Transfer	115
10		10, 11	Cylindrical Pipe	Stainless Steel	6 inch	schedule 40	General Heat Transfer	115
11		9, 12	Cylindrical Pipe	Stainless Steel	6 inch	schedule 40	General Heat Transfer	115
12		12, 11	Cylindrical Pipe	Stainless Steel	6 inch	schedule 40	General Heat Transfer	115
13		11, 13	Cylindrical Pipe	Stainless Steel	8 inch	schedule 10	General Heat Transfer	115
14		13, 14	Cylindrical Pipe	Stainless Steel	8 inch	schedule 10	General Heat Transfer	115
15		14, 15	Cylindrical Pipe	Stainless Steel	8 inch	schedule 10	General Heat Transfer	115
16		15, 16	Cylindrical Pipe	Stainless Steel	8 inch	schedule 10	General Heat Transfer	115
17		16, 17	Cylindrical Pipe	Stainless Steel	8 inch	schedule 10	General Heat Transfer	115
18		17, 18	Cylindrical Pipe	Stainless Steel	8 inch	schedule 10	General Heat Transfer	115
19		18, 19	Cylindrical Pipe	Stainless Steel	8 inch	schedule 10	General Heat Transfer	115
20		19, 20	Cylindrical Pipe	Stainless Steel	8 inch	schedule 10	General Heat Transfer	115
21		21, 22	Cylindrical Pipe	Stainless Steel	12 inch	schedule 10	Adiabatic	
22		22, 23	Cylindrical Pipe	Stainless Steel	6 inch	schedule 40	Adiabatic	
23		23, 13	Cylindrical Pipe	Stainless Steel	6 inch	schedule 40	Adiabatic	
30		8, 30	Cylindrical Pipe	Stainless Steel	5 inch	schedule 40	Adiabatic	
31		14, 31	Cylindrical Pipe	Stainless Steel	8 inch	schedule 10	Adiabatic	

Pipe	Ambient Temp. Units	Special Condition
1		None
2		None
3		None
4		None
5		None
6	deg. F	None
7	deg. F	None
8	deg. F	None
9	deg. F	None
10	deg. F	None
11	deg. F	None
12	deg. F	None
13	deg. F	None
14	deg. F	None
15	deg. F	None
16	deg. F	None
17	deg. F	None
18	deg. F	None
19	deg. F	None
20	deg. F	None
21		None
22		None
23		None

AFT Arrow 3.0 Input (3 of 6) 3/25/2006 10:25 AM
DMJMH+N

AFT Arrow Model, OGTS Bypass System T-H Model Case 2 (Clean Filters, NYB 1508, 115 °F Ambient, HT)

Pipe	Ambient Temp. Units	Special Condition
30		None
31		None

Pipe Loss Table

Pipe Losses	K Total	Standard Bends	Mitre Bends	Smooth Bends	Angle Valves	Ball Valves	Butterfly Valves	Cylinder Valves	Gate Valves	Globe Valves	Plug Valves	Poppet Valves
12	1.23			1 (0.13)								
13	0.11											
15	1.32											
21	1.42											
22	0.04											
23	0.11											

Pipe Losses	Three-way Valves	Swing Check Valves	Lift Check Valves	Tilting Disc Check Valves	Stop Check Valves	Sharp-edged Orifice	Long Orifice	Contractions	Expansions
12									
13									
15									
21									
22									
23									

Pipe Losses	Entrances	Exits	Differential Flowmeter	Honeycomb	Screen	Tee	Add'l Loss
12						1 (1.1)	
13							(0.11)
15						1 (1.1)	(0.22)
21							(1.42)
22						1 (0.04)	
23							(0.11)

Area Change Table

Area Change	Name	Object Defined	Elevation	Elevation Units	Initial Pressure	Initial Pressure Units	Database Source	Type	Geometry
3	Area Change	Yes	0	feet				Conical	Contraction
4	Area Change	Yes	0	feet				Conical	Expansion
5	Area Change	Yes	0	feet				Conical	Contraction
7	Area Change	Yes	0	feet				Conical	Contraction

Area Change	Angle	Loss Factor
3	22.	0.4399
4	22.	0.1552
5	22.	0.4404
7	28.	0.1241

Compressor/Fan Table

Compressor/Fan	Name	Object Defined	Elevation	Elevation Units	Initial Pressure	Initial Pressure Units	Database Source	Special Condition
17	N31-130	Yes	0	feet				None

Compressor/Fan	Pump Type	Design Flow Rate	Design Flow Rate Units	Current Configuration	Independent Variable	Ind. Variable Units	Dependent Variable
17	Comp./Fan Curve				Vol. Flow Rate	ft3/min	Pressure Loss

AFT Arrow 3.0 Input (4 of 6) 3/25/2006 10:25 AM
DMJMH+N

AFT Arrow Model, OGTS Bypass System T-H Model Case 2 (Clean Filters, NYB 1508, 115 °F Ambient, HT)

Compressor/Fan	Dep. Variable Units	Comp./Fan Curve Constant a	Comp./Fan Curve Constant b	Comp./Fan Curve Constant c	Comp./Fan Curve Constant d	Comp./Fan Curve Constant e
17	in. H2O std.	12.46429	2.571429E-03	-2.285714E-06	0	0

Compressor/Fan	Runout Flow Rate	Runout Flow Rate Units	Added Press. Type	Speed	Control Discharge	Control Discharge Units	Control When Exceeded Only	Compression Process
17			Static	100				Adiabatic

Dead End Table

Dead End	Name	Object Defined	Elevation	Elevation Units	Initial Pressure	Initial Pressure Units	Database Source
30	To Main OGTS	Yes	0	feet			
31	To Train B HEPA	Yes	0	feet			

General Component Table

General Component	Name	Object Defined	Elevation	Elevation Units	Initial Pressure	Initial Pressure Units	Database Source	Special Condition
2	HEPA Filter N02-010	Yes	0	feet				None
16	HEPA Filter 136/137	Yes	0	feet				None
18	Backdraft Damper	Yes	0	feet				None
22	Heater & HEPA Filter	Yes	0	feet				None

General Component	Loss Model	Loss Value	Independent Variable	Ind. Variable Units	Dependent Variable	Dep. Variable Units	Loss Constant a
2	General Polynomial	Variable	Vol. Flow Rate	ft3/min	Pressure Loss	in. H2O std.	-1.165517E-17
16	General Polynomial	Variable	Vol. Flow Rate	ft3/min	Pressure Loss	in. H2O std.	3.534499E-17
18	General Polynomial	Variable	Vol. Flow Rate	ft3/min	Pressure Loss	in. H2O std.	7.923767E-02
22	General Polynomial	Variable	Vol. Flow Rate	ft3/min	Pressure Loss	in. H2O std.	-1.436568E-17

General Component	Loss Constant b	Loss Constant c	Loss Constant d	Loss Constant e
2	0.00224	0	0	0
16	2.826666E-03	0	0	0
18	1.687181E-04	3.4618E-08	0	0
22	0.001382	0	0	0

Heat Exchanger Table

Heat Exchanger	Name	Object Defined	Elevation	Elevation Units	Initial Pressure	Initial Pressure Units	Database Source	Special Condition	Type
6	ICV Plenum	Yes	0	feet				None	

Heat Exchanger	Loss Model	Loss Value	Independent Variable	Ind. Variable Units	Dependent Variable	Dep. Variable Units	Loss Constant a	Loss Constant b	Loss Constant c
6	K Constant	1.5							

Heat Exchanger	Loss Constant d	Loss Constant e
6		

Tank Table

Tank	Name	Object Defined	Elevation	Elevation Units	Initial Pressure	Initial Pressure Units	Database Source	Pressure	Pressure Units	Temperature
1	Atm Pres	Yes	0	feet				14.3	psia	115
20	Atm Pres	Yes	0	feet				14.3	psia	115
21	Atm Pres	Yes	0	feet				14.3	psia	115

AFT Arrow 3.0 Input (5 of 6) 3/25/2006 10:25 AM
DMJMH+N

AFT Arrow Model, OGTS Bypass System T-H Model Case 2 (Clean Filters, NYB 1508, 115 °F Ambient, HT)

Tank	Temperature Units	Balance Energy	Balance Concentration	(Pipe #1) K In, K Out	(Pipe #2) K In, K Out	(Pipe #3) K In, K Out	(Pipe #4) K In, K Out	(Pipe #5) K In, K Out	(Pipe #6) K In, K Out
1	deg. F	No	No	(P1) 0, 0					
20	deg. F	No	No	(P20) 0, 0					
21	deg. F	No	No	(P21) 0, 0					

Tank	(Pipe #7) K In, K Out	(Pipe #8) K In, K Out	(Pipe #9) K In, K Out	(Pipe #10) K In, K Out	(Pipe #11) K In, K Out	(Pipe #12) K In, K Out	(Pipe #13) K In, K Out	(Pipe #14) K In, K Out	(Pipe #15) K In, K Out
1									
20									
21									

Tank	(Pipe #16) K In, K Out	(Pipe #17) K In, K Out	(Pipe #18) K In, K Out	(Pipe #19) K In, K Out	(Pipe #20) K In, K Out	(Pipe #21) K In, K Out	(Pipe #22) K In, K Out	(Pipe #23) K In, K Out	(Pipe #24) K In, K Out
1									
20									
21									

Tank	(Pipe #25) K In, K Out
1	
20	
21	

Tee or Wye Table

Tee or Wye	Name	Object Defined	Elevation	Elevation Units	Initial Pressure	Initial Pressure Units	Database Source	Tee/Wye Type	Loss Type
8	Tee or Wye	Yes	0	feet				Round Straight	Detailed
9	Tee or Wye	Yes	0	feet				Round Straight	Detailed
11	Tee or Wye	Yes	0	feet				Round Straight	Detailed
13	Tee or Wye	Yes	0	feet				Round Straight	Detailed
14	Tee or Wye	Yes	0	feet				Round Straight	Detailed

Tee or Wye	Angle	Pipes A, B, C
8	135	
9	150	
11	30	
13	45	
14	135	

Valve Table

Valve	Name	Object Defined	Elevation	Elevation Units	Initial Pressure	Initial Pressure Units	Database Source	Special Condition	Exit Valve	Exit Pressure
10	HV-901	Yes	0	feet				Closed	No	
12	HV-902	Yes	0	feet				Closed	No	
15	V-166	Yes	0	feet				None	No	
19	V-167	Yes	0	feet				None	No	
23	V-178	Yes	0	feet				None	No	

Valve	Exit Pressure Units	CdA	CdA Units	Loss Model	Loss Value	Independent Variable	Ind. Variable Units	Dependent Variable	Dep. Variable Units	Loss Constant a
10				Cv Constant	1194					
12				Cv Constant	1194					
15				Cv Constant	2440					
19				Cv Constant	2440					
23				Cv Constant	300					

AFT Arrow 3.0 Input (6 of 6) 3/25/2006 10:25 AM
DMJMH+N

AFT Arrow Model, OGTS Bypass System T-H Model Case 2 (Clean Filters, NYB 1508, 115 °F Ambient, HT)

Valve	Loss Constant b	Loss Constant c	Loss Constant d	Loss Constant e
10				
12				
15				
19				
23				

AFT Arrow 3.0 Output (1 of 5) 3/25/2006
DMJMH+N

AFT Arrow Model, OGTS Bypass System T-H Model Case 2 (Clean Filters, NYB 1508, 115 °F Ambient, HT)

Title: AFT Arrow Model, OGTS Bypass System T-H Model Case 2 (Clean Filters, NYB 1508, 115 °F Ambient, HT)
Analysis run on: 3/25/2006 10:23:36 AM
Application version: AFT Arrow Version 3.0 (2005.09.14)
Input File: M:\Demonstration Bulk VIT\Fiscal Year 2006 Work\Calculations\OGTS Bypass Thermal Hydraulics Analysis\Work Files\Bypass Flow 8 inch Pipe Rev 1 Case 1.aro

Execution Time= 11.51 seconds
Total Number Of Pressure Iterations= 0
Total Number Of Flow Iterations= 52
Total Number Of Enthalpy Iterations= 52
Number Of Pipes= 25
Number Of Junctions= 25
Matrix Method= Gaussian Elimination

Length March Solution Method with Mach Number Limits
Length Step Size= 12 inches
Mach Number Increment= 0.01
Pressure Tolerance= 0.0001 relative change
Mass Flow Rate Tolerance= 0.0001 relative change
Enthalpy Tolerance= 0.0001 relative change
Flow Relaxation= (Automatic)
Pressure Relaxation= (Automatic)
Resistance Relaxation= (Automatic)

Fluid Database: AFT Standard
Fluid: Air
Max Fluid Temperature Data= 1000 deg. K
Min Fluid Temperature Data= 200 deg. K
Molecular Weight =28.97 amu
Gas Constant =0.06855 Btu/lbm-R
Critical Pressure =37.25 atm
Critical Temperature =132.41 deg. K
Acentric Factor =0.021
Equation of State= Redlich-Kwong
Enthalpy Model= Generalized
Specific Heat Ratio Accuracy = High
Atmospheric Pressure= 14.3 psia
Gravitational Acceleration= 1 g
Standard Pressure= 14.696 psia
Standard Temperature= 60 deg. F
Turbulent Flow Above Reynolds Number= 4000
Laminar Flow Below Reynolds Number= 2300
Total Inflow= 0.7572 lbm/sec
Total Outflow= 0.7572 lbm/sec
Total Energy Inflow= 157.8 Btu/s
Total Energy Outflow= 157.3 Btu/s
Total Heat Transferred Into System= -0.5593 Btu/s
Maximum Pressure is 14.33 psia at Junction 17 Outlet
Minimum Pressure is 13.76 psia at Junction 17 Inlet
Maximum Static Temperature is 124.7 deg. F at Junction 17 Outlet
Minimum Static Temperature is 115.0 deg. F at Junction 13 Inlet

Compressor/Fan Summary

Jct	Name	Mass Flow (scfm)	Vol. Flow (ft3/min)	DP Stag. (in. H2O std.)	DP Static (in. H2O std.)	Overall Efficiency (Percent)	Speed (Percent)	Overall Power (hp)	Comp. Ratio (Percent)	BEP Q (ft3/sec)	BEP Mass (lbm/sec)
17	N31-130	594.8	702.6	15.76	15.77	67.40	100.0	2.545	104.1	N/A	N/A

Jct	% of BEP (Percent)
17	N/A

Valve Summary

AFT Arrow 3.0 Output (2 of 5) 3/25/2006
DMJMH+N

AFT Arrow Model, OGTS Bypass System T-H Model Case 2 (Clean Filters, NYB 1508, 115 °F Ambient, HT)

Jct	Name	Valve Type	Mass Flow (lbm/sec)	DP Stag (psid)	DP Static (psid)	P Static Inlet (psia)	K	Valve State	Cv	Cv Est.
X10	HV-901	REGULAR	0.0000	No Solution	No Solution	No Solution	No Solution	Closed By User	1,194.0	No Solution
X12	HV-902	REGULAR	0.0000	No Solution	No Solution	No Solution	No Solution	Closed By User	1,194.0	No Solution
15	V-166	REGULAR	0.7572	0.005218	0.005219	13.84	0.7809	Open	2,440.0	N/A
19	V-167	REGULAR	0.7572	0.005134	0.005136	14.32	0.7817	Open	2,440.0	N/A
23	V-178	REGULAR	0.7572	0.321421	0.321952	14.24	13.9968	Open	300.0	N/A

Heat Exchanger Summary

Jct	Name	Mass Flow (lbm/sec)	DPo (psid)	DP (psid)	DT Loss (deg. F)	T Inlet (deg. F)	T Outlet (deg. F)	Heat Rate In (Btu/s)
6	ICV Plenum	0	N/A	N/A	0	115.0	115.0	N/A

Pipe Output Table

Pipe	Name	Mass Flow (scfm)	Vol. Flow Avg (ft3/min)	Vel. In (feet/sec)	Vel. Out (feet/min)	Mach # In	Mach # Out	dP Stag. Total (in. H2O std.)	P Stag. In (in. H2O std. (g))	P Stag. Out (in. H2O std. (g))
1	Pipe	0.0	0.0	0.00	0.0	0.00000	0.00000	0.000000	0.0000	0.00000
2	Pipe	0.0	0.0	0.00	0.0	0.00000	0.00000	0.000000	0.0000	0.00000
3	3 FEs	0.0	0.0	0.00	0.0	0.00000	0.00000	0.000000	0.0000	0.00000
4	Pipe	0.0	0.0	0.00	0.0	0.00000	0.00000	0.000000	0.0000	0.00000
5	Pipe	0.0	0.0	0.00	0.0	0.00000	0.00000	0.000000	0.0000	0.00000
6	Pipe	0.0	0.0	0.00	0.0	0.00000	0.00000	0.000000	0.0000	0.00000
7	Pipe	0.0	0.0	0.00	0.0	0.00000	0.00000	0.000000	0.0000	0.00000
8	Pipe	0.0	0.0	0.00	0.0	0.00000	0.00000	0.000000	0.0000	0.00000
9	Pipe	0.0	0.0	0.00	0.0	0.00000	0.00000	0.000000	0.0000	0.00000
10	Pipe	0.0	0.0	0.00	0.0	0.00000	0.00000	0.000000	-11.2464	-11.24643
11	Pipe	0.0	0.0	0.00	0.0	0.00000	0.00000	0.000000	0.0000	0.00000
12	Pipe	0.0	0.0	0.00	0.0	0.00000	0.00000	0.000000	-11.2464	-11.24643
13	Pipe	0.0	0.0	0.00	0.0	0.00000	0.00000	0.000000	-11.2464	-11.24643
14	Pipe	594.8	697.0	30.66	1,844.4	0.02619	0.02625	0.958840	-11.2464	-12.20527
15	Pipe	594.8	698.2	30.74	1,846.1	0.02625	0.02628	0.358199	-12.2053	-12.56347
16	Pipe	594.8	698.8	30.78	1,847.2	0.02629	0.02629	0.086666	-12.7078	-12.79451
17	Pipe	594.8	702.6	30.95	1,856.9	0.02643	0.02643	0.025395	-14.7701	-14.79553
18	Pipe	594.8	686.0	30.22	1,812.8	0.02560	0.02559	0.037010	0.9665	0.92954
19	Pipe	594.8	686.2	30.23	1,813.6	0.02561	0.02560	0.004910	0.7183	0.71339
20	Pipe	594.8	685.3	30.24	1,808.5	0.02561	0.02559	0.598081	0.5713	-0.02679
21	Pipe	594.8	676.2	13.46	807.7	0.01149	0.01150	0.057707	0.0000	-0.05771
22	Pipe	594.8	678.6	56.37	3,382.6	0.04815	0.04815	0.037010	-0.9923	-1.02930
23	Pipe	594.8	694.9	57.68	3,466.2	0.04927	0.04934	0.600747	-9.9264	-10.52718
30	Pipe	0.0	0.0	0.00	0.0	0.00000	0.00000	0.000000	0.0000	0.00000
31	Pipe	0.0	0.0	0.00	0.0	0.00000	0.00000	0.000000	-12.2053	-12.20527

Pipe	P Static In (in. H2O std. (g))	P Static Out (in. H2O std. (g))	dT Stag. (deg. F)	T Stag. Inlet (deg. F)	T Stag. Outlet (deg. F)	T Static In (deg. F)	T Static Out (deg. F)	dH Stag. (Btu/lbm)	H Stag. In (Btu/lbm)
1	0.00000	0.00000	0.00000000	115.0	115.0	115.0	115.0	0.000000000	206.1
2	0.00000	0.00000	0.00000000	115.0	115.0	115.0	115.0	0.000000000	206.1
3	0.00000	0.00000	0.00000000	115.0	115.0	115.0	115.0	0.000000000	206.1
4	0.00000	0.00000	0.00000000	115.0	115.0	115.0	115.0	0.000000000	206.1
5	0.00000	0.00000	0.00000000	115.0	115.0	115.0	115.0	0.000000000	206.1
6	0.00000	0.00000	0.00000000	115.0	115.0	115.0	115.0	0.000000000	206.1
7	0.00000	0.00000	0.00000000	115.0	115.0	115.0	115.0	0.000000000	206.1

AFT Arrow 3.0 Output (3 of 5) 3/25/2006
DMJMH+N

AFT Arrow Model, OGTS Bypass System T-H Model Case 2 (Clean Filters, NYB 1508, 115 °F Ambient, HT)

Pipe	P Static In (in. H2O std. (g))	P Static Out (in. H2O std. (g))	dT Stag. (deg. F)	T Stag. Inlet (deg. F)	T Stag. Outlet (deg. F)	T Static In (deg. F)	T Static Out (deg. F)	dH Stag. (Btu/lbm)	H Stag. In (Btu/lbm)
8	0.00000	0.00000	0.00000000	115.0	115.0	115.0	115.0	0.000000000	206.1
9	0.00000	0.00000	0.00000000	115.0	115.0	115.0	115.0	0.000000000	206.1
10	-11.24643	-11.24643	0.00000000	115.0	115.0	115.0	115.0	0.000000000	206.1
11	0.00000	0.00000	0.00000000	115.0	115.0	115.0	115.0	0.000000000	206.1
12	-11.24643	-11.24643	0.00000000	115.0	115.0	115.0	115.0	0.000000000	206.1
13	-11.24643	-11.24643	0.00000000	115.0	115.0	115.0	115.0	0.000000000	206.1
14	-11.42977	-12.38906	0.00561523	115.0	115.0	114.9	114.9	0.001562005	206.1
15	-12.38906	-12.74744	0.00024414	115.0	115.0	114.9	114.9	0.000123265	206.1
16	-12.89189	-12.97858	-0.00006104	115.0	115.0	114.9	114.9	0.000008043	206.1
17	-14.95516	-14.98058	0.00000000	115.0	115.0	114.9	114.9	0.000008210	206.1
18	0.78585	0.74889	-0.24407959	124.7	124.5	124.7	124.4	-0.059566839	208.4
19	0.53755	0.53267	-0.06860352	124.5	124.4	124.4	124.3	-0.016742299	208.4
20	0.39051	-0.20702	-2.72149658	124.4	121.7	124.3	121.6	-0.684116430	208.4
21	-0.03635	-0.09408	0.00036621	115.0	115.0	115.0	115.0	0.000000000	206.1
22	-1.62820	-1.66529	0.00000000	115.0	115.0	114.7	114.7	0.000000000	206.1
23	-10.57713	-11.17888	-0.00048828	115.0	115.0	114.7	114.7	0.000000000	206.1
30	0.00000	0.00000	0.00000000	115.0	115.0	115.0	115.0	0.000000000	206.1
31	-12.20527	-12.20527	0.00000000	115.0	115.0	115.0	115.0	0.000000000	206.1

Pipe	H Stag. Out (Btu/lbm)	H Static In (Btu/lbm)	H Static Out (Btu/lbm)	Rho Stag. In (lbm/ft3)	Rho Stag. Out (lbm/ft3)	Heat Transfer Model	Heat Flux (Btu/s-ft2)	Heat Rate (Btu/s)
1	206.1	206.1	206.1	0.06719	0.06719	Adiabatic	0.000E+00	0.000000000
2	206.1	206.1	206.1	0.06719	0.06719	Adiabatic	0.000E+00	0.000000000
3	206.1	206.1	206.1	0.06719	0.06719	Adiabatic	0.000E+00	0.000000000
4	206.1	206.1	206.1	0.06719	0.06719	Adiabatic	0.000E+00	0.000000000
5	206.1	206.1	206.1	0.06719	0.06719	Adiabatic	0.000E+00	0.000000000
6	206.1	206.1	206.1	0.06719	0.06719	Gen'l Heat Tran.	0.000E+00	0.000000000
7	206.1	206.1	206.1	0.06719	0.06719	Gen'l Heat Tran.	0.000E+00	0.000000000
8	206.1	206.1	206.1	0.06719	0.06719	Gen'l Heat Tran.	0.000E+00	0.000000000
9	206.1	206.1	206.1	0.06719	0.06719	Gen'l Heat Tran.	0.000E+00	0.000000000
10	206.1	206.1	206.1	0.06529	0.06529	Gen'l Heat Tran.	0.000E+00	0.000000000
11	206.1	206.1	206.1	0.06719	0.06719	Gen'l Heat Tran.	0.000E+00	0.000000000
12	206.1	206.1	206.1	0.06529	0.06529	Gen'l Heat Tran.	0.000E+00	0.000000000
13	206.1	206.1	206.1	0.06529	0.06529	Gen'l Heat Tran.	0.000E+00	0.000000000
14	206.1	206.0	206.0	0.06529	0.06512	Gen'l Heat Tran.	3.306E-06	0.001182711
15	206.1	206.0	206.0	0.06512	0.06506	Gen'l Heat Tran.	1.851E-06	0.000093334
16	206.1	206.0	206.0	0.06504	0.06502	Gen'l Heat Tran.	1.862E-06	0.000006090
17	206.1	206.0	206.0	0.06469	0.06468	Gen'l Heat Tran.	2.851E-06	0.000006216
18	208.4	208.4	208.4	0.06624	0.06626	Gen'l Heat Tran.	-5.910E-03	-0.045102514
19	208.4	208.4	208.3	0.06622	0.06623	Gen'l Heat Tran.	-5.814E-03	-0.012676848
20	207.7	208.3	207.7	0.06620	0.06642	Gen'l Heat Tran.	-4.907E-03	-0.502852261
21	206.1	206.1	206.1	0.06719	0.06719	Adiabatic	0.000E+00	0.000000000
22	206.1	206.0	206.0	0.06703	0.06702	Adiabatic	0.000E+00	0.000000000
23	206.1	206.0	206.0	0.06551	0.06541	Adiabatic	0.000E+00	0.000000000
30	206.1	206.1	206.1	0.06719	0.06719	Adiabatic	0.000E+00	0.000000000
31	206.1	206.1	206.1	0.06512	0.06512	Adiabatic	0.000E+00	0.000000000

All Junction Table

Jct	Name	Mass Flow Thru Junction (scfm)	dP Stag. Total (in. H2O std.)	P Stag. In (in. H2O std. (g))	P Stag. Out (in. H2O std. (g))	P Static In (in. H2O std. (g))	P Static Out (in. H2O std. (g))
1	Atm Pres	0.0	0.0000	0.00000	0.0000	0.00000	0.0000
2	HEPA Filter N02-010	0.0	0.0000	0.00000	0.0000	0.00000	0.0000

AFT Arrow 3.0 Output (4 of 5) 3/25/2006
DMJMH+N

AFT Arrow Model, OGTS Bypass System T-H Model Case 2 (Clean Filters, NYB 1508, 115 °F Ambient, HT)

Jct	Name	Mass Flow Thru Junction (scfm)	dP Stag. Total (in. H2O std.)	P Stag. In (in. H2O std. (g))	P Stag. Out (in. H2O std. (g))	P Static In (in. H2O std. (g))	P Static Out (in. H2O std. (g))
3	Area Change	0.0	0.0000	0.00000	0.0000	0.00000	0.0000
4	Area Change	0.0	0.0000	0.00000	0.0000	0.00000	0.0000
5	Area Change	0.0	0.0000	0.00000	0.0000	0.00000	0.0000
6	ICV Planum	0.0	0.0000	0.00000	0.0000	0.00000	0.0000
7	Area Change	0.0	0.0000	0.00000	0.0000	0.00000	0.0000
8	Tee or Wye	0.0	0.0000	0.00000	0.0000	0.00000	0.0000
9	Tee or Wye	0.0	0.0000	0.00000	0.0000	0.00000	0.0000
X10	HV-901	0.0	No Solution	No Solution	-11.2464	No Solution	-11.2464
11	Tee or Wye	0.0	0.0000	-11.24643	-11.2464	-11.24643	-11.2464
X12	HV-902	0.0	No Solution	No Solution	-11.2464	No Solution	-11.2464
13	Tee or Wye	N/A	See Losses	-11.24643	-11.2464	-11.62762	-11.6276
14	Tee or Wye	N/A	0.0000	-12.20527	-12.2053	-12.38906	-12.3891
15	V-166	594.8	0.1444	-12.56347	-12.7078	-12.74744	-12.8919
16	HEPA Filter 136/137	594.8	1.9756	-12.79451	-14.7701	-12.97858	-14.9552
17	N31-130	594.8	-15.7621	-14.79553	0.9665	-14.98058	0.7859
18	Backdraft Damper	594.8	0.2112	0.92954	0.7183	0.74889	0.5375
19	V-167	594.8	0.1421	0.71339	0.5713	0.53267	0.3905
20	Atm Pres	594.8	0.0000	0.00000	0.0000	0.00000	0.0000
21	Atm Pres	594.8	0.0000	0.00000	0.0000	0.00000	0.0000
22	Heater & HEPA Filter	594.8	0.9346	-0.05771	-0.9923	-0.09408	-1.6282
23	V-178	594.8	8.8971	-1.02930	-9.9264	-1.66529	-10.5771
30	To Main OGTS	0.0	0.0000	0.00000	0.0000	0.00000	0.0000
31	To Train B HEPA	0.0	0.0000	-12.20527	-12.2053	-12.20527	-12.2053

Jct	dT Stag. (deg. F)	T Stag. Inlet (deg. F)	T Stag. Outlet (deg. F)	T Static In (deg. F)	T Static Out (deg. F)	dH Stag. (Btu/lbm)	H Stag. In (Btu/lbm)	H Stag. Out (Btu/lbm)	H Static In (Btu/lbm)	H Static Out (Btu/lbm)
1	0.0000000	115.0	115.0	115.0	115.0	0.000	206.1	206.1	206.1	206.1
2	0.0000000	115.0	115.0	115.0	115.0	0.000	206.1	206.1	206.1	206.1
3	0.0000000	115.0	115.0	115.0	115.0	0.000	206.1	206.1	206.1	206.1
4	0.0000000	115.0	115.0	115.0	115.0	0.000	206.1	206.1	206.1	206.1
5	0.0000000	115.0	115.0	115.0	115.0	0.000	206.1	206.1	206.1	206.1
6	0.0000000	115.0	115.0	115.0	115.0	0.000	206.1	206.1	206.1	206.1
7	0.0000000	115.0	115.0	115.0	115.0	0.000	206.1	206.1	206.1	206.1
8	0.0000000	115.0	115.0	115.0	115.0	N/A	206.1	206.1	206.1	206.1
9	0.0000000	115.0	115.0	115.0	115.0	N/A	206.1	206.1	206.1	206.1
X10	No Solution	No Solution	115.0	No Solution	115.0	0.000	No Solution	206.1	No Solution	206.1
11	0.0000000	115.0	115.0	115.0	115.0	N/A	206.1	206.1	206.1	206.1
X12	No Solution	No Solution	115.0	No Solution	115.0	0.000	No Solution	206.1	No Solution	206.1
13	0.0000000	115.0	115.0	114.8	114.8	N/A	206.1	206.1	206.0	206.0
14	0.0000000	115.0	115.0	114.9	114.9	N/A	206.1	206.1	206.0	206.0
15	-0.0001221	115.0	115.0	114.9	114.9	0.000	206.1	206.1	206.0	206.0
16	-0.0015869	115.0	115.0	114.9	114.9	0.000	206.1	206.1	206.0	206.0
17	9.7330933	115.0	124.7	114.9	124.7	-2.372	206.1	208.4	206.0	208.4
18	-0.0001831	124.5	124.5	124.4	124.4	0.000	208.4	208.4	208.4	208.4
19	-0.0001221	124.4	124.4	124.3	124.3	0.000	208.4	208.4	208.3	208.3
20	0.0000000	115.0	115.0	115.0	115.0	0.000	206.1	206.1	206.1	206.1
21	0.0000000	115.0	115.0	115.0	115.0	0.000	206.1	206.1	206.1	206.1
22	-0.0010986	115.0	115.0	115.0	114.7	0.000	206.1	206.1	206.1	206.0
23	-0.0072632	115.0	115.0	114.7	114.7	0.000	206.1	206.1	206.0	206.0
30	0.0000000	115.0	115.0	115.0	115.0	0.000	206.1	206.1	206.1	206.1
31	0.0000000	115.0	115.0	115.0	115.0	0.000	206.1	206.1	206.1	206.1

AFT Arrow 3.0 Output (5 of 5) 3/25/2006
DMJMH+N

AFT Arrow Model, OGTS Bypass System T-H Model Case 2 (Clean Filters, NYB 1508, 115 °F Ambient, HT)

Jct	Sonic Area (feet2)
1	0.00000
2	0.00000
3	0.00000
4	0.00000
5	0.00000
6	0.00000
7	0.00000
8	N/A
9	N/A
X10	0.00000
11	N/A
X12	0.00000
13	N/A
14	N/A
15	0.01716
16	0.01717
17	0.01726
18	0.01671
19	0.01672
20	0.01671
21	0.01661
22	0.01661
23	0.01665
30	0.00000
31	0.00000

Junction Loss Table

Jct	Pipe #	Pipe Dir.	dP Stag. Total (in. H2O std.)
8	P7	In	0.000
	P30	Out	0.000
	P8	Out	0.000
9	P8	In	0.000
	P9	Out	0.000
	P11	Out	0.000
11	P10	In	0.000
	P13	Out	0.000
	P12	In	0.000
13	P13	In	0.000
	P14	Out	0.000
	P23	In	0.7193
14	P14	In	0.000
	P15	Out	0.000
	P31	Out	0.000

AFT Arrow Model, OGTS Bypass System T-H Model Case 3 (Dirty Filters, NYB 1508, 115 °F Ambient, HT)

Title: AFT Arrow Model, OGTS Bypass System T-H Model Case 3 (Dirty Filters, NYB 1508, 115 °F Ambient, HT)
Input File: M:\Demonstration Bulk VIT\Fiscal Year 2006 Work\Calculations\OGTS Bypass Thermal Hydraulics Analysis\Work Files\Bypass Flow 8 Inch Pipe Rev 1 Case 3.aro

Number Of Pipes= 25
Number Of Junctions= 25

Length March Solution Method with Mach Number Limits
Length Step Size= 12 Inches
Mach Number Increment= 0.01
Pressure Tolerance= 0.0001 relative change
Mass Flow Rate Tolerance= 0.0001 relative change
Enthalpy Tolerance= 0.0001 relative change
Flow Relaxation= (Automatic)
Pressure Relaxation= (Automatic)
Resistance Relaxation= (Automatic)

Fluid Database: AFT Standard
Fluid: Air
Max Fluid Temperature Data= 1000 deg. K
Min Fluid Temperature Data= 200 deg. K
Molecular Weight =28.97 amu
Gas Constant =0.06855 Btu/lbm-R
Critical Pressure =37.25 atm
Critical Temperature =132.41 deg. K
Acentric Factor =0.021
Equation of State= Redlich-Kwong
Enthalpy Model= Generalized
Specific Heat Ratio Accuracy = High
Atmospheric Pressure= 14.3 psia
Gravitational Acceleration= 1 g
Standard Pressure= 14.696 psia
Standard Temperature= 60 deg. F
Turbulent Flow Above Reynolds Number= 4000
Laminar Flow Below Reynolds Number= 2300

Pipe Input Table

Pipe	Name	Pipe Defined	Length	Length Units	Hydraulic Diameter	Hydraulic Diam. Units	Friction Data Set	Roughness	Roughness Units	Losses (K)	Initial Flow
1	Pipe	Yes	64	inches	6.065	inches	Unspecified	0.00015	feet	2.93	
2	Pipe	Yes	104	inches	6.065	inches	Unspecified	0.00015	feet	0.21	
3	3 FEs	Yes	163	inches	4.026	inches	Unspecified	0.00015	feet	1.635	
4	Pipe	Yes	39	inches	6.065	inches	Unspecified	0.00015	feet	0.16	
5	Pipe	Yes	22	inches	4.025	inches	Unspecified	0.00015	feet	0.32	
6	Pipe	Yes	72	inches	6.065	inches	Unspecified	0.00015	feet	0.15	
7	Pipe	Yes	141.5	inches	5.047	inches	Unspecified	0.00015	feet	0.47	
8	Pipe	Yes	8	inches	6.065	inches	Unspecified	0.00015	feet	0.14	
9	Pipe	Yes	10.5	inches	6.065	inches	Unspecified	0.00015	feet	0	
10	Pipe	Yes	8	inches	6.065	inches	Unspecified	0.00015	feet	0.05	
11	Pipe	Yes	6	inches	6.065	inches	Unspecified	0.00015	feet	0.05	
12	Pipe	Yes	12	inches	6.065	inches	Unspecified	0.00015	feet	1.227941	
13	Pipe	Yes	251	inches	8.329	inches	Unspecified	0.00015	feet	0.11	
14	Pipe	Yes	1969	inches	8.329	inches	Unspecified	0.00015	feet	0.77	
15	Pipe	Yes	277.5	inches	8.329	inches	Unspecified	0.00015	feet	1.32	
16	Pipe	Yes	18	inches	8.329	inches	Unspecified	0.00015	feet	0.43	
17	Pipe	Yes	12	inches	8.329	inches	Unspecified	0.00015	feet	0.11	
18	Pipe	Yes	42	inches	8.329	inches	Unspecified	0.00015	feet	0.11	
19	Pipe	Yes	12	inches	8.329	inches	Unspecified	0.00015	feet	0	
20	Pipe	Yes	564	inches	8.329	inches	Unspecified	0.00015	feet	2.04	
21	Pipe	Yes	104	inches	12.39	inches	Unspecified	0.00015	feet	1.42	
22	Pipe	Yes	6	inches	6.065	inches	Unspecified	0.00015	feet	0.04	
23	Pipe	Yes	268	inches	6.065	inches	Unspecified	0.00015	feet	0.11	

AFT Arrow 3.0 Input (2 of 6) 3/25/2006 10:38 AM
DMJMH+N

AFT Arrow Model, OGTS Bypass System T-H Model Case 3 (Dirty Filters, NYB 1508, 115 °F Ambient, HT)

Pipe	Name	Pipe Defined	Length	Length Units	Hydraulic Diameter	Hydraulic Diam. Units	Friction Data Set	Roughness	Roughness Units	Losses (K)	Initial Flow
30	Pipe	Yes	0.5	feet	5.047	inches	Unspecified	0.00015	feet	0	
31	Pipe	Yes	0.5	feet	8.329	inches	Unspecified	0.00015	feet	0	

Pipe	Initial Flow Units	Junctions (Up,Down)	Geometry	Material	Size	Type	Thermal Boundary	Ambient Temp.
1		1, 2	Cylindrical Pipe	Stainless Steel	6 inch	schedule 40	Adiabatic	
2		2, 3	Cylindrical Pipe	Stainless Steel	6 inch	schedule 40	Adiabatic	
3		3, 4	Cylindrical Pipe	Stainless Steel	4 inch	schedule 40	Adiabatic	
4		4, 5	Cylindrical Pipe	Stainless Steel	6 inch	schedule 40	Adiabatic	
5		5, 6	Cylindrical Pipe	Unspecified			Adiabatic	
6		6, 7	Cylindrical Pipe	Stainless Steel	6 inch	schedule 40	General Heat Transfer	115
7		7, 8	Cylindrical Pipe	Stainless Steel	5 inch	schedule 40	General Heat Transfer	115
8		8, 9	Cylindrical Pipe	Stainless Steel	6 inch	schedule 40	General Heat Transfer	115
9		9, 10	Cylindrical Pipe	Stainless Steel	6 inch	schedule 40	General Heat Transfer	115
10		10, 11	Cylindrical Pipe	Stainless Steel	6 inch	schedule 40	General Heat Transfer	115
11		9, 12	Cylindrical Pipe	Stainless Steel	6 inch	schedule 40	General Heat Transfer	115
12		12, 11	Cylindrical Pipe	Stainless Steel	6 inch	schedule 40	General Heat Transfer	115
13		11, 13	Cylindrical Pipe	Stainless Steel	8 inch	schedule 10	General Heat Transfer	115
14		13, 14	Cylindrical Pipe	Stainless Steel	8 inch	schedule 10	General Heat Transfer	115
15		14, 15	Cylindrical Pipe	Stainless Steel	8 inch	schedule 10	General Heat Transfer	115
16		15, 16	Cylindrical Pipe	Stainless Steel	8 inch	schedule 10	General Heat Transfer	115
17		16, 17	Cylindrical Pipe	Stainless Steel	8 inch	schedule 10	General Heat Transfer	115
18		17, 18	Cylindrical Pipe	Stainless Steel	8 inch	schedule 10	General Heat Transfer	115
19		18, 19	Cylindrical Pipe	Stainless Steel	8 inch	schedule 10	General Heat Transfer	115
20		19, 20	Cylindrical Pipe	Stainless Steel	8 inch	schedule 10	General Heat Transfer	115
21		21, 22	Cylindrical Pipe	Stainless Steel	12 inch	schedule 10	Adiabatic	
22		22, 23	Cylindrical Pipe	Stainless Steel	6 inch	schedule 40	Adiabatic	
23		23, 13	Cylindrical Pipe	Stainless Steel	6 inch	schedule 40	Adiabatic	
30		8, 30	Cylindrical Pipe	Stainless Steel	5 inch	schedule 40	Adiabatic	
31		14, 31	Cylindrical Pipe	Stainless Steel	8 inch	schedule 10	Adiabatic	

Pipe	Ambient Temp. Units	Special Condition
1		None
2		None
3		None
4		None
5		None
6	deg. F	None
7	deg. F	None
8	deg. F	None
9	deg. F	None
10	deg. F	None
11	deg. F	None
12	deg. F	None
13	deg. F	None
14	deg. F	None
15	deg. F	None
16	deg. F	None
17	deg. F	None
18	deg. F	None
19	deg. F	None
20	deg. F	None
21		None
22		None
23		None

AFT Arrow 3.0 Input (3 of 6) 3/25/2008 10:38 AM
DMJMH+N

AFT Arrow Model, OGTS Bypass System T-H Model Case 3 (Dirty Filters, NYB 1508, 115 °F Ambient, HT)

Pipe	Ambient Temp. Units	Special Condition
30		None
31		None

Pipe Loss Table

Pipe Losses	K Total	Standard Bends	Mitre Bends	Smooth Bends	Angle Valves	Ball Valves	Butterfly Valves	Cylinder Valves	Gate Valves	Globe Valves	Plug Valves	Poppet Valves
12	1.23			1 (0.13)								
13	0.11											
15	1.32											
21	1.42											
22	0.04											
23	0.11											

Pipe Losses	Three-way Valves	Swing Check Valves	Lift Check Valves	Tilting Disc Check Valves	Stop Check Valves	Sharp-edged Orifice	Long Orifice	Contractions	Expansions
12									
13									
15									
21									
22									
23									

Pipe Losses	Entrances	Exits	Differential Flowmeter	Honeycomb	Screen	Tee	Add'l Loss
12						1 (1.1)	
13							(0.11)
15						1 (1.1)	(0.22)
21							(1.42)
22						1 (0.04)	
23							(0.11)

Area Change Table

Area Change	Name	Object Defined	Elevation	Elevation Units	Initial Pressure	Initial Pressure Units	Database Source	Type	Geometry
3	Area Change	Yes	0	feet				Conical	Contraction
4	Area Change	Yes	0	feet				Conical	Expansion
5	Area Change	Yes	0	feet				Conical	Contraction
7	Area Change	Yes	0	feet				Conical	Contraction

Area Change	Angle	Loss Factor
3	22.	0.4399
4	22.	0.1552
5	22.	0.4404
7	28.	0.1241

Compressor/Fan Table

Compressor/Fan	Name	Object Defined	Elevation	Elevation Units	Initial Pressure	Initial Pressure Units	Database Source	Special Condition
17	N31-130	Yes	0	feet				None

Compressor/Fan	Pump Type	Design Flow Rate	Design Flow Rate Units	Current Configuration	Independent Variable	Ind. Variable Units	Dependent Variable
17	Comp./Fan Curve				Vol. Flow Rate	ft3/min	Pressure Loss

AFT Arrow 3.0 Input (4 of 6) 3/25/2006 10:38 AM
DMJMH+N

AFT Arrow Model, OGTS Bypass System T-H Model Case 3 (Dirty Filters, NYB 1508, 115 °F Ambient, HT)

Compressor/Fan	Dep. Variable Units	Comp./Fan Curve Constant a	Comp./Fan Curve Constant b	Comp./Fan Curve Constant c	Comp./Fan Curve Constant d	Comp./Fan Curve Constant e
17	in. H2O std.	12.46429	2.571429E-03	-2.285714E-06	0	0

Compressor/Fan	Runout Flow Rate	Runout Flow Rate Units	Added Press. Type	Speed	Control Discharge	Control Discharge Units	Control When Exceeded Only	Compression Process
17			Static	100				Adiabatic

Dead End Table

Dead End	Name	Object Defined	Elevation	Elevation Units	Initial Pressure	Initial Pressure Units	Database Source
30	To Main OGTS	Yes	0	feet			
31	To Train B HEPA	Yes	0	feet			

General Component Table

General Component	Name	Object Defined	Elevation	Elevation Units	Initial Pressure	Initial Pressure Units	Database Source	Special Condition
2	HEPA Filter N02-010	Yes	0	feet				None
16	HEPA Filter 136/137	Yes	0	feet				None
18	Backdraft Damper	Yes	0	feet				None
22	Heater & HEPA Filter	Yes	0	feet				None

General Component	Loss Model	Loss Value	Independent Variable	Ind. Variable Units	Dependent Variable	Dep. Variable Units	Loss Constant a
2	General Polynomial	Variable	Vol. Flow Rate	ft3/min	Pressure Loss	in. H2O std.	-2.331035E-17
16	General Polynomial	Variable	Vol. Flow Rate	ft3/min	Pressure Loss	in. H2O std.	5.475221E-17
18	General Polynomial	Variable	Vol. Flow Rate	ft3/min	Pressure Loss	in. H2O std.	7.923767E-02
22	General Polynomial	Variable	Vol. Flow Rate	ft3/min	Pressure Loss	in. H2O std.	-2.602085E-17

General Component	Loss Constant b	Loss Constant c	Loss Constant d	Loss Constant e
2	0.00448	0	0	0
16	4.373333E-03	0	0	0
18	1.687181E-04	3.4618E-08	0	0
22	0.002502	0	0	0

Heat Exchanger Table

Heat Exchanger	Name	Object Defined	Elevation	Elevation Units	Initial Pressure	Initial Pressure Units	Database Source	Special Condition	Type
6	ICV Plenum	Yes	0	feet				None	

Heat Exchanger	Loss Model	Loss Value	Independent Variable	Ind. Variable Units	Dependent Variable	Dep. Variable Units	Loss Constant a	Loss Constant b	Loss Constant c
6	K Constant	1.5							

Heat Exchanger	Loss Constant d	Loss Constant e
6		

Tank Table

Tank	Name	Object Defined	Elevation	Elevation Units	Initial Pressure	Initial Pressure Units	Database Source	Pressure	Pressure Units	Temperature
1	Atm Pres	Yes	0	feet				14.3	psia	115
20	Atm Pres	Yes	0	feet				14.3	psia	115
21	Atm Pres	Yes	0	feet				14.3	psia	115

AFT Arrow 3.0 Input (5 of 6) 3/25/2006 10:38 AM
DMJMH+N

AFT Arrow Model, OGTS Bypass System T-H Model Case 3 (Dirty Filters, NYB 1508, 115 °F Ambient, HT)

Tank	Temperature Units	Balance Energy	Balance Concentration	(Pipe #1) K In, K Out	(Pipe #2) K In, K Out	(Pipe #3) K In, K Out	(Pipe #4) K In, K Out	(Pipe #5) K In, K Out	(Pipe #6) K In, K Out
1	deg. F	No	No	(P1) 0, 0					
20	deg. F	No	No	(P20) 0, 0					
21	deg. F	No	No	(P21) 0, 0					

Tank	(Pipe #7) K In, K Out	(Pipe #8) K In, K Out	(Pipe #9) K In, K Out	(Pipe #10) K In, K Out	(Pipe #11) K In, K Out	(Pipe #12) K In, K Out	(Pipe #13) K In, K Out	(Pipe #14) K In, K Out	(Pipe #15) K In, K Out
1									
20									
21									

Tank	(Pipe #16) K In, K Out	(Pipe #17) K In, K Out	(Pipe #18) K In, K Out	(Pipe #19) K In, K Out	(Pipe #20) K In, K Out	(Pipe #21) K In, K Out	(Pipe #22) K In, K Out	(Pipe #23) K In, K Out	(Pipe #24) K In, K Out
1									
20									
21									

Tank	(Pipe #25) K In, K Out
1	
20	
21	

Tee or Wye Table

Tee or Wye	Name	Object Defined	Elevation	Elevation Units	Initial Pressure	Initial Pressure Units	Database Source	Tee/Wye Type	Loss Type
8	Tee or Wye	Yes	0	feet				Round Straight	Detailed
9	Tee or Wye	Yes	0	feet				Round Straight	Detailed
11	Tee or Wye	Yes	0	feet				Round Straight	Detailed
13	Tee or Wye	Yes	0	feet				Round Straight	Detailed
14	Tee or Wye	Yes	0	feet				Round Straight	Detailed

Tee or Wye	Angle	Pipes A, B, C
8	135	
9	150	
11	30	
13	45	
14	135	

Valve Table

Valve	Name	Object Defined	Elevation	Elevation Units	Initial Pressure	Initial Pressure Units	Database Source	Special Condition	Exit Valve	Exit Pressure
10	HV-901	Yes	0	feet				None	No	
12	HV-902	Yes	0	feet				None	No	
15	V-166	Yes	0	feet				None	No	
19	V-167	Yes	0	feet				None	No	
23	V-178	Yes	0	feet				None	No	

Valve	Exit Pressure Units	CdA	CdA Units	Loss Model	Loss Value	Independent Variable	Ind. Variable Units	Dependent Variable	Dep. Variable Units	Loss Constant a
10				Cv Constant	1194					
12				Cv Constant	1194					
15				Cv Constant	2440					
19				Cv Constant	2440					
23				Cv Constant	300					

AFT Arrow 3.0 Input (6 of 6) 3/25/2006 10:38 AM
DMJMH+N

AFT Arrow Model, OGTS Bypass System T-H Model Case 3 (Dirty Filters, NYB 1508, 115 °F Ambient, HT)

Valve	Loss Constant b	Loss Constant c	Loss Constant d	Loss Constant e
10				
12				
15				
19				
23				

Title: AFT Arrow Model, OGTS Bypass System T-H Model Case 3 (Dirty Filters, NYB 1508, 115 °F Ambient, HT)
Analysis run on: 3/25/2006 10:33:50 AM
Application version: AFT Arrow Version 3.0 (2005.09.14)
Input File: M:\Demonstration Bulk VIT\Fiscal Year 2006 Work\Calculations\OGTS Bypass Thermal Hydraulics Analysis\Work Files\Bypass Flow 8 inch Pipe Rev 1 Case 3.aro

Execution Time= 1:46.78 (106.78 seconds)
Total Number Of Pressure Iterations= 572
Total Number Of Flow Iterations= 196
Total Number Of Enthalpy Iterations= 196
Number Of Pipes= 25
Number Of Junctions= 25
Matrix Method= Gaussian Elimination

Length March Solution Method with Mach Number Limits
Length Step Size= 12 inches
Mach Number Increment= 0.01
Pressure Tolerance= 0.0001 relative change
Mass Flow Rate Tolerance= 0.0001 relative change
Enthalpy Tolerance= 0.0001 relative change
Flow Relaxation= (Automatic)
Pressure Relaxation= (Automatic)
Resistance Relaxation= (Automatic)

Fluid Database: AFT Standard
Fluid: Air
Max Fluid Temperature Data= 1000 deg. K
Min Fluid Temperature Data= 200 deg. K
Molecular Weight =28.97 amu
Gas Constant =0.06855 Btu/lbm-R
Critical Pressure =37.25 atm
Critical Temperature =132.41 deg. K
Acentric Factor =0.021
Equation of State= Redlich-Kwong
Enthalpy Model= Generalized
Specific Heat Ratio Accuracy = High
Atmospheric Pressure= 14.3 psia
Gravitational Acceleration= 1 g
Standard Pressure= 14.696 psia
Standard Temperature= 60 deg. F
Turbulent Flow Above Reynolds Number= 4000
Laminar Flow Below Reynolds Number= 2300
Total Inflow= 0.8981 lbm/sec
Total Outflow= 0.8981 lbm/sec
Total Energy Inflow= 253.5 Btu/s
Total Energy Outflow= 195.0 Btu/s
Total Heat Transferred Into System= -58.43 Btu/s
Maximum Pressure is 14.34 psia at Junction 17 Outlet
Minimum Pressure is 13.83 psia at Junction 17 Inlet
Maximum Static Temperature is 875.0 deg. F at Junction 6 Outlet
Minimum Static Temperature is 115.0 deg. F at Junction 23 Outlet

Compressor/Fan Summary

Jct	Name	Mass Flow (scfm)	Vol. Flow (ft3/min)	DP Stag. (in. H2O std.)	DP Static (in. H2O std.)	Overall Efficiency (Percent)	Speed (Percent)	Overall Power (hp)	Comp. Ratio (Percent)	BEP Q (ft3/sec)	BEP Mass (lbm/sec)
17	N31-130	705.5	906.5	14.24	14.25	67.40	100.0	2.971	103.7	N/A	N/A

Jct	% of BEP (Percent)
17	N/A

Valve Summary

AFT Arrow 3.0 Output (2 of 5) 3/25/2006
DMJMH+N

AFT Arrow Model, OGTS Bypass System T-H Model Case 3 (Dirty Filters, NYB 1508, 115 °F Ambient, HT)

Jct	Name	Valve Type	Mass Flow (lbm/sec)	DP Stag (psid)	DP Static (psid)	P Static Inlet (psia)	K	Valve State	Cv	Cv Est.
10	HV-901	REGULAR	0.28609	0.0058659	0.0058687	14.07	0.8583	Open	1,194.0	N/A
12	HV-902	REGULAR	0.06643	0.0003585	0.0003585	14.07	0.9741	Open	1,194.0	N/A
15	V-166	REGULAR	0.89811	0.0078699	0.0078756	13.98	0.7770	Open	2,440.0	N/A
19	V-167	REGULAR	0.89811	0.0077692	0.0077747	14.33	0.7770	Open	2,440.0	N/A
23	V-178	REGULAR	0.54558	0.1634032	0.1635417	14.24	13.7055	Open	300.0	N/A

Heat Exchanger Summary

Jct	Name	Mass Flow (lbm/sec)	DPo (psid)	DP (psid)	DT Loss (deg. F)	T Inlet (deg. F)	T Outlet (deg. F)	Heat Rate In (Btu/s)
6	ICV Plenum	0.3525	0.03881	0.02461	-760.0	114.7	874.7	66.19

Pipe Output Table

Pipe #	Name	Mass Flow (scfm)	Vol. Flow Avg (ft3/min)	Vel. In (feet/sec)	Vel. Out (feet/min)	Mach # In	Mach # Out	dP Stag. Total (in. H2O std.)	P Stag. In (in. H2O std. (g))	P Stag. Out (in. H2O std. (g))
1	Pipe	276.91	315.0	26.156	1,571.1	0.022337	0.022362	0.4325368	0.0000	-0.43253678
2	Pipe	276.91	316.4	26.279	1,577.0	0.022442	0.022446	0.0778751	-1.8446	-1.92251182
3	3 FEs	276.91	317.5	59.721	3,599.3	0.051011	0.051239	1.7453790	-1.9832	-3.72858047
4	Pipe	276.91	318.0	26.413	1,584.9	0.022556	0.022558	0.0406270	-3.8395	-3.88013339
5	Pipe	276.91	318.5	60.050	3,605.9	0.051292	0.051333	0.3078310	-3.9412	-4.24902391
6	Pipe	276.91	727.4	61.632	3,553.6	0.034694	0.034004	0.1227523	-5.3234	-5.44616222
7	Pipe	276.91	689.4	85.591	4,788.6	0.049146	0.047467	0.6428260	-5.4847	-6.12755585
8	Pipe	276.91	663.9	55.234	3,304.2	0.032847	0.032799	0.0462235	-6.1276	-6.17377949
9	Pipe	224.72	536.2	44.682	2,664.6	0.026611	0.026529	0.0066524	-6.1609	-6.16752291
10	Pipe	224.72	533.6	44.429	2,653.5	0.026540	0.026478	0.0144927	-6.3299	-6.34439182
11	Pipe	52.18	124.4	10.376	618.0	0.006179	0.006156	0.0007656	-6.3440	-6.34473515
12	Pipe	52.18	123.1	10.301	609.2	0.006158	0.006112	0.0129616	-6.3547	-6.36762238
13	Pipe	276.91	617.7	28.831	1,535.0	0.017278	0.016264	0.0541694	-6.3448	-6.39901018
14	Pipe	705.46	993.5	47.482	2,402.4	0.035313	0.032466	1.5365945	-6.4174	-7.95403051
15	Pipe	705.46	903.3	40.040	2,372.4	0.032466	0.032283	0.5433042	-7.9540	-8.49733448
16	Pipe	705.46	897.9	39.562	2,372.5	0.032302	0.032299	0.1316749	-8.7152	-8.84684849
17	Pipe	705.46	906.7	39.948	2,395.8	0.032630	0.032624	0.0385944	-12.7728	-12.81135082
18	Pipe	705.46	887.1	39.116	2,342.0	0.031707	0.031676	0.0558325	1.4269	1.37308323
19	Pipe	705.46	886.4	39.058	2,342.1	0.031696	0.031687	0.0072067	1.1172	1.10994458
20	Pipe	705.46	876.3	39.056	2,288.5	0.031704	0.031363	0.8949037	0.8949	-0.00002640
21	Pipe	428.55	487.2	9.698	581.9	0.008281	0.008282	0.0301733	0.0000	-0.03017330
22	Pipe	428.55	489.0	40.623	2,437.5	0.034693	0.034695	0.0194820	-1.2492	-1.26867771
23	Pipe	428.55	494.9	41.096	2,467.8	0.035098	0.035127	0.3210566	-5.7918	-6.11285210
30	Pipe	0.00	0.0	0.000	0.0	0.000000	0.000000	0.0000000	-6.1276	-6.12755585
31	Pipe	0.00	0.0	0.000	0.0	0.000000	0.000000	0.0000000	-7.9540	-7.95403051

Pipe	P Static In (in. H2O std. (g))	P Static Out (in. H2O std. (g))	dT Stag. (deg. F)	T Stag. Inlet (deg. F)	T Stag. Outlet (deg. F)	T Static In (deg. F)	T Static Out (deg. F)	dH Stag. (Btu/lbm)	H Stag. In (Btu/lbm)	H Stag. Out (Btu/lbm)
1	-0.13732	-0.56999	0.00006104	115.0	115.0	114.9	114.9	0.00000	206.1	206.1
2	-1.98259	-2.06050	-0.00006104	115.0	115.0	114.9	114.9	0.00000	206.1	206.1
3	-2.69509	-4.44366	-0.00140381	115.0	115.0	114.7	114.7	0.00000	206.1	206.1
4	-3.97818	-4.01880	-0.00006104	115.0	115.0	114.9	114.9	0.00000	206.1	206.1
5	-4.65735	-4.96576	-0.00024414	115.0	115.0	114.7	114.7	0.00000	206.1	206.1
6	-5.64703	-5.75713	-52.45581055	875.0	822.5	874.7	822.3	-13.11376	393.8	380.7
7	-6.13392	-6.73287	-88.47631836	822.5	734.1	822.0	733.6	-22.06575	380.7	358.6
8	-6.41757	-6.46292	-3.66528320	734.1	730.4	733.8	730.2	-0.91270	358.6	357.7

AFT Arrow 3.0 Output (3 of 5) 3/25/2006
DMJMH+N

AFT Arrow Model, OGTS Bypass System T-H Model Case 3 (Dirty Filters, NYB 1508, 115 °F Ambient, HT)

Pipe	P Static In (in. H2O std. (g))	P Static Out (in. H2O std. (g))	dT Stag. (deg. F)	T Stag. Inlet (deg. F)	T Stag. Outlet (deg. F)	T Static In (deg. F)	T Static Out (deg. F)	dH Stag. (Btu/lbm)	H Stag. In (Btu/lbm)	H Stag. Out (Btu/lbm)
9	-6.35123	-6.35675	-7.26135254	730.4	723.1	730.2	723.0	-1.80780	357.7	355.9
10	-6.51920	-6.53282	-5.47229004	723.1	717.7	723.0	717.5	-1.36242	355.9	354.6
11	-6.35424	-6.35492	-8.65502930	730.4	721.7	730.4	721.7	-2.15471	357.7	355.6
12	-6.36485	-6.37765	-16.93359375	721.7	704.8	721.7	704.8	-4.21356	355.6	351.4
13	-6.42509	-6.47023	-132.41479492	715.2	582.8	715.2	582.8	-32.87941	354.0	321.1
14	-6.75423	-8.23802	-121.33561707	299.5	178.1	299.3	178.0	-29.71949	251.2	221.5
15	-8.23802	-8.77779	-8.82202148	178.1	169.3	178.0	169.2	-2.15633	221.5	219.3
16	-8.99579	-9.12731	-0.52752686	169.3	168.8	169.2	168.7	-0.12891	219.3	219.2
17	-13.05609	-13.09455	-0.34875488	168.8	168.4	168.7	168.3	-0.08524	219.2	219.1
18	1.15150	1.09624	-1.43078613	178.5	177.1	178.4	177.0	-0.34976	221.6	221.2
19	0.84013	0.83308	-0.40277100	177.1	176.7	177.0	176.6	-0.09847	221.2	221.1
20	0.61788	-0.27056	-16.24743652	176.7	160.4	176.6	160.3	-3.97076	221.1	217.2
21	-0.01887	-0.04905	0.00036621	115.0	115.0	115.0	115.0	0.00000	206.1	206.1
22	-1.57931	-1.59879	0.00000000	115.0	115.0	114.9	114.9	0.00000	206.1	206.1
23	-6.12576	-6.44708	-0.00024414	115.0	115.0	114.9	114.9	0.00000	206.1	206.1
30	-6.12756	-6.12756	0.00000000	734.1	734.1	734.1	734.1	0.00000	358.6	358.6
31	-7.95403	-7.95403	0.00000000	178.1	178.1	178.1	178.1	0.00000	221.5	221.5

Pipe	H Static In (Btu/lbm)	H Static Out (Btu/lbm)	Rho Stag. In (lbm/ft3)	Rho Stag. Out (lbm/ft3)	Heat Transfer Model	Heat Flux (Btu/s-ft2)	Heat Rate (Btu/s)
1	206.1	206.1	0.06719	0.06712	Adiabatic	0.00000	0.00000
2	206.1	206.1	0.06688	0.06687	Adiabatic	0.00000	0.00000
3	206.0	206.0	0.06686	0.06656	Adiabatic	0.00000	0.00000
4	206.1	206.1	0.06654	0.06654	Adiabatic	0.00000	0.00000
5	206.0	206.0	0.06653	0.06647	Adiabatic	0.00000	0.00000
6	393.7	380.6	0.02853	0.02969	Gen'l Heat Tran.	-0.48526	-4.62298
7	380.6	358.5	0.02968	0.03183	Gen'l Heat Tran.	-0.49927	-7.77882
8	358.6	357.7	0.03183	0.03192	Gen'l Heat Tran.	-0.40528	-0.32175
9	357.7	355.9	0.03193	0.03212	Gen'l Heat Tran.	-0.37226	-0.51719
10	355.9	354.5	0.03211	0.03226	Gen'l Heat Tran.	-0.36822	-0.38977
11	357.7	355.6	0.03191	0.03214	Gen'l Heat Tran.	-0.18028	-0.14313
12	355.6	351.4	0.03214	0.03261	Gen'l Heat Tran.	-0.17627	-0.27989
13	353.9	321.1	0.03232	0.03642	Gen'l Heat Tran.	-0.25414	-11.59095
14	251.2	221.5	0.05002	0.05931	Gen'l Heat Tran.	-0.07460	-26.69146
15	221.5	219.3	0.05931	0.06006	Gen'l Heat Tran.	-0.03841	-1.93663
16	219.3	219.2	0.06003	0.06006	Gen'l Heat Tran.	-0.03540	-0.11578
17	219.2	219.1	0.05945	0.05948	Gen'l Heat Tran.	-0.03511	-0.07655
18	221.5	221.2	0.06071	0.06084	Gen'l Heat Tran.	-0.04116	-0.31413
19	221.2	221.1	0.06080	0.06084	Gen'l Heat Tran.	-0.04056	-0.08843
20	221.1	217.1	0.06081	0.06226	Gen'l Heat Tran.	-0.03480	-3.56619
21	206.1	206.1	0.06719	0.06719	Adiabatic	0.00000	0.00000
22	206.0	206.0	0.06698	0.06698	Adiabatic	0.00000	0.00000
23	206.0	206.0	0.06621	0.06616	Adiabatic	0.00000	0.00000
30	358.6	358.6	0.03183	0.03183	Adiabatic	0.00000	0.00000
31	221.5	221.5	0.05931	0.05931	Adiabatic	0.00000	0.00000

All Junction Table

Jct	Name	Mass Flow Thru Junction (scfm)	dP Stag. Total (in. H2O std.)	P Stag. In (in. H2O std. (g))	P Stag. Out (in. H2O std. (g))	P Static In (in. H2O std. (g))	P Static Out (in. H2O std. (g))
1	Atm Pres	276.91	0.000000	0.00000	0.0000	0.00000	0.0000
2	HEPA Filter N02-010	276.91	1.412121	-0.43254	-1.8446	-0.56999	-1.9826
3	Area Change	276.91	0.060672	-1.92251	-1.9832	-2.06050	-2.6951

AFT Arrow 3.0 Output (4 of 5) 3/25/2008
DMJMH+N

AFT Arrow Model, OGTS Bypass System T-H Model Case 3 (Dirty Filters, NYB 1508, 115 °F Ambient, HT)

Jct	Name	Mass Flow Thru Junction (scfm)	dP Stag. Total (in. H2O std.)	P Stag. In (in. H2O std. (g))	P Stag. Out (in. H2O std. (g))	P Static In (in. H2O std. (g))	P Static Out (in. H2O std. (g))
4	Area Change	276.91	0.110921	-3.72858	-3.8395	-4.44386	-3.9782
5	Area Change	276.91	0.061059	-3.88013	-3.9412	-4.01880	-4.6574
6	ICV Plenum	276.91	1.074394	-4.24902	-5.3234	-4.96576	-5.6470
7	Area Change	276.91	0.038586	-5.44616	-5.4847	-5.75713	-6.1339
8	Tee or Wye	N/A	0.000000	-6.12756	-6.1276	-6.56091	-6.5609
9	Tee or Wye	N/A	See Losses	-6.17367	-6.1737	-6.38114	-6.3811
10	HV-901	224.72	0.162371	-6.16752	-6.3299	-6.35675	-6.5192
11	Tee or Wye	N/A	See Losses	-6.34484	-6.3448	-6.45194	-6.4519
12	HV-902	52.18	0.009923	-6.34474	-6.3547	-6.35492	-6.3649
13	Tee or Wye	N/A	See Losses	-6.41744	-6.4174	-6.68562	-6.6856
14	Tee or Wye	N/A	0.000000	-7.95403	-7.9540	-8.23802	-8.2380
15	V-166	705.46	0.217844	-8.49733	-8.7152	-8.77779	-8.9958
16	HEPA Filter 136/137	705.46	3.925915	-8.84685	-12.7728	-9.12731	-13.0561
17	N31-130	705.46	-14.240259	-12.81135	1.4289	-13.09455	1.1515
18	Backdraft Damper	705.46	0.255927	1.37308	1.1172	1.09624	0.8401
19	V-167	705.46	0.215057	1.10994	0.8949	0.83308	0.6179
20	Atm Pres	705.46	0.000000	0.00000	0.0000	0.00000	0.0000
21	Atm Pres	428.55	0.000000	0.00000	0.0000	0.00000	0.0000
22	Heater & HEPA Filter	428.55	1.219023	-0.03017	-1.2492	-0.04905	-1.5793
23	V-178	428.55	4.523109	-1.26868	-5.7918	-1.59879	-6.1258
30	To Main OGTS	0.00	0.000000	-6.12756	-6.1276	-6.12756	-6.1276
31	To Train B HEPA	0.00	0.000000	-7.95403	-7.9540	-7.95403	-7.9540

Jct	dT Stag. (deg. F)	T Stag. Inlet (deg. F)	T Stag. Outlet (deg. F)	T Static In (deg. F)	T Static Out (deg. F)	dH Stag. (Btu/lbm)	H Stag. In (Btu/lbm)	H Stag. Out (Btu/lbm)	H Static In (Btu/lbm)	H Static Out (Btu/lbm)	Sonic Area (feet2)
1	0.0000000	115.0	115.0	115.0	115.0	0.000	206.1	206.1	206.1	206.1	0.007734
2	-0.0011597	115.0	115.0	114.9	114.9	0.000	206.1	206.1	206.1	206.1	0.007742
3	-0.0003662	115.0	115.0	114.9	114.7	0.000	206.1	206.1	206.1	206.0	0.007771
4	0.0002441	115.0	115.0	114.7	114.9	0.000	206.1	206.1	206.0	206.1	0.007807
5	-0.0003662	115.0	115.0	114.9	114.7	0.000	206.1	206.1	206.1	206.0	0.007810
6	760.0000153	115.0	875.0	114.7	874.7	-187.755	206.1	393.8	206.0	393.7	0.007818
7	0.0001221	822.5	822.5	822.3	822.0	0.000	380.7	380.7	380.6	380.6	0.011753
8	0.0000000	734.1	734.1	733.7	733.7	N/A	358.6	358.6	358.5	358.5	N/A
9	0.0000000	730.4	730.4	730.2	730.2	N/A	357.7	357.7	357.7	357.7	N/A
10	0.0000000	723.1	723.1	723.0	723.0	0.000	355.9	355.9	355.9	355.9	0.009173
11	0.0000000	715.2	715.2	715.2	715.2	N/A	354.0	354.0	353.9	353.9	N/A
12	0.0000000	721.7	721.7	721.7	721.7	0.000	355.6	355.6	355.6	355.6	0.002130
13	0.0000000	299.5	299.5	299.3	299.3	N/A	251.2	251.2	251.2	251.2	N/A
14	0.0000000	178.1	178.1	178.0	178.0	N/A	221.5	221.5	221.5	221.5	N/A
15	-0.0001831	169.3	169.3	169.2	169.2	0.000	219.3	219.3	219.3	219.3	0.021071
16	-0.0025635	168.8	168.8	168.7	168.7	0.000	219.2	219.2	219.2	219.2	0.021081
17	10.0728760	168.4	178.5	168.3	178.4	-2.460	219.1	221.6	219.1	221.5	0.021293
18	-0.0001221	177.1	177.1	177.0	177.0	0.000	221.2	221.2	221.2	221.2	0.020675
19	-0.0001831	176.7	176.7	176.6	176.6	0.000	221.1	221.1	221.1	221.1	0.020682
20	0.0000000	115.0	115.0	115.0	115.0	0.000	206.1	206.1	206.1	206.1	0.020472
21	0.0000000	115.0	115.0	115.0	115.0	0.000	206.1	206.1	206.1	206.1	0.011969
22	-0.0011597	115.0	115.0	115.0	114.9	0.000	206.1	206.1	206.1	206.0	0.011970
23	-0.0036621	115.0	115.0	114.9	114.9	0.000	206.1	206.1	206.0	206.0	0.012007
30	0.0000000	734.1	734.1	734.1	734.1	0.000	358.6	358.6	358.6	358.6	0.000000
31	0.0000000	178.1	178.1	178.1	178.1	0.000	221.5	221.5	221.5	221.5	0.000000

Junction Loss Table

AFT Arrow 3.0 Output (5 of 5) 3/25/2006
DMJMH+N

AFT Arrow Model, OGTS Bypass System T-H Model Case 3 (Dirty Filters, NYB 1508, 115 °F Ambient, HT)

Jct	Pipe #	Pipe Dir.	dP Stag. Total (in. H2O std.)
8	P7	In	0.000
	P30	Out	0.000
	P8	Out	0.000
9	P8	In	0.000
	P9	Out	-0.01280
	P11	Out	0.1703
11	P10	In	4.476E-04
	P13	Out	0.000
	P12	In	-0.02276
13	P13	In	0.01844
	P14	Out	0.000
	P23	In	0.3046
14	P14	In	0.000
	P15	Out	0.000
	P31	Out	0.000

Title: AFT Arrow Model, OGTS Bypass System T-H Model Case 4 (Dirty Filters, NYB 1508, 115 °F Ambient, HT)
Input File: M:\Demonstration Bulk VIT\Fiscal Year 2006 Work\Calculations\OGTS Bypass Thermal Hydraulics Analysis\Work Files\Bypass Flow 8 Inch Pipe Rev 1 Case 1.aro

Number Of Pipes= 25
Number Of Junctions= 25

Length March Solution Method with Mach Number Limits
Length Step Size= 12 inches
Mach Number Increment= 0.01
Pressure Tolerance= 0.0001 relative change
Mass Flow Rate Tolerance= 0.0001 relative change
Enthalpy Tolerance= 0.0001 relative change
Flow Relaxation= (Automatic)
Pressure Relaxation= (Automatic)
Resistance Relaxation= (Automatic)

Fluid Database: AFT Standard
Fluid: Air
Max Fluid Temperature Data= 1000 deg. K
Min Fluid Temperature Data= 200 deg. K
Molecular Weight =28.97 amu
Gas Constant =0.06855 Btu/lbm-R
Critical Pressure =37.25 atm
Critical Temperature =132.41 deg. K
Acentric Factor =0.021
Equation of State= Redlich-Kwong
Enthalpy Model= Generalized
Specific Heat Ratio Accuracy = High
Atmospheric Pressure= 14.3 psia
Gravitational Acceleration= 1 g
Standard Pressure= 14.696 psia
Standard Temperature= 60 deg. F
Turbulent Flow Above Reynolds Number= 4000
Laminar Flow Below Reynolds Number= 2300

Pipe Input Table

Pipe	Name	Pipe Defined	Length	Length Units	Hydraulic Diameter	Hydraulic Diam. Units	Friction Data Set	Roughness	Roughness Units	Losses (K)	Initial Flow
1	Pipe	Yes	64	inches	6.065	inches	Unspecified	0.00015	feet	2.93	
2	Pipe	Yes	104	inches	6.065	inches	Unspecified	0.00015	feet	0.21	
3	3 FEs	Yes	163	inches	4.026	inches	Unspecified	0.00015	feet	1.635	
4	Pipe	Yes	39	inches	6.065	inches	Unspecified	0.00015	feet	0.16	
5	Pipe	Yes	22	inches	4.025	inches	Unspecified	0.00015	feet	0.32	
6	Pipe	Yes	72	inches	6.065	inches	Unspecified	0.00015	feet	0.15	
7	Pipe	Yes	141.5	inches	5.047	inches	Unspecified	0.00015	feet	0.47	
8	Pipe	Yes	6	inches	6.065	inches	Unspecified	0.00015	feet	0.14	
9	Pipe	Yes	10.5	inches	6.065	inches	Unspecified	0.00015	feet	0	
10	Pipe	Yes	8	inches	6.065	inches	Unspecified	0.00015	feet	0.05	
11	Pipe	Yes	6	inches	6.065	inches	Unspecified	0.00015	feet	0.05	
12	Pipe	Yes	12	inches	6.065	inches	Unspecified	0.00015	feet	1.227941	
13	Pipe	Yes	251	inches	8.329	inches	Unspecified	0.00015	feet	0.11	
14	Pipe	Yes	1969	inches	8.329	inches	Unspecified	0.00015	feet	0.77	
15	Pipe	Yes	277.5	inches	8.329	inches	Unspecified	0.00015	feet	1.32	
16	Pipe	Yes	18	inches	8.329	inches	Unspecified	0.00015	feet	0.43	
17	Pipe	Yes	12	inches	8.329	inches	Unspecified	0.00015	feet	0.11	
18	Pipe	Yes	42	inches	8.329	inches	Unspecified	0.00015	feet	0.11	
19	Pipe	Yes	12	inches	8.329	inches	Unspecified	0.00015	feet	0	
20	Pipe	Yes	564	inches	8.329	inches	Unspecified	0.00015	feet	2.04	
21	Pipe	Yes	104	inches	12.39	inches	Unspecified	0.00015	feet	1.42	
22	Pipe	Yes	6	inches	6.065	inches	Unspecified	0.00015	feet	0.04	
23	Pipe	Yes	268	inches	6.065	inches	Unspecified	0.00015	feet	0.11	

AFT Arrow 3.0 Input (2 of 6) 3/25/2008 10:31 AM
DMJMH+N

AFT Arrow Model, OGTS Bypass System T-H Model Case 4 (Dirty Filters, NYB 1508, 115 °F Ambient, HT)

Pipe	Name	Pipe Defined	Length	Length Units	Hydraulic Diameter	Hydraulic Diam. Units	Friction Data Set	Roughness	Roughness Units	Losses (K)	Initial Flow
30	Pipe	Yes	0.5	feet	5.047	inches	Unspecified	0.00015	feet	0	
31	Pipe	Yes	0.5	feet	8.329	inches	Unspecified	0.00015	feet	0	

Pipe	Initial Flow Units	Junctions (Up,Down)	Geometry	Material	Size	Type	Thermal Boundary	Ambient Temp.
1		1, 2	Cylindrical Pipe	Stainless Steel	6 inch	schedule 40	Adiabatic	
2		2, 3	Cylindrical Pipe	Stainless Steel	6 inch	schedule 40	Adiabatic	
3		3, 4	Cylindrical Pipe	Stainless Steel	4 inch	schedule 40	Adiabatic	
4		4, 5	Cylindrical Pipe	Stainless Steel	6 inch	schedule 40	Adiabatic	
5		5, 6	Cylindrical Pipe	Unspecified			Adiabatic	
6		6, 7	Cylindrical Pipe	Stainless Steel	6 inch	schedule 40	General Heat Transfer	115
7		7, 8	Cylindrical Pipe	Stainless Steel	5 inch	schedule 40	General Heat Transfer	115
8		8, 9	Cylindrical Pipe	Stainless Steel	6 inch	schedule 40	General Heat Transfer	115
9		9, 10	Cylindrical Pipe	Stainless Steel	6 inch	schedule 40	General Heat Transfer	115
10		10, 11	Cylindrical Pipe	Stainless Steel	6 inch	schedule 40	General Heat Transfer	115
11		9, 12	Cylindrical Pipe	Stainless Steel	6 inch	schedule 40	General Heat Transfer	115
12		12, 11	Cylindrical Pipe	Stainless Steel	6 inch	schedule 40	General Heat Transfer	115
13		11, 13	Cylindrical Pipe	Stainless Steel	8 inch	schedule 10	General Heat Transfer	115
14		13, 14	Cylindrical Pipe	Stainless Steel	8 inch	schedule 10	General Heat Transfer	115
15		14, 15	Cylindrical Pipe	Stainless Steel	8 inch	schedule 10	General Heat Transfer	115
16		15, 16	Cylindrical Pipe	Stainless Steel	8 inch	schedule 10	General Heat Transfer	115
17		16, 17	Cylindrical Pipe	Stainless Steel	8 inch	schedule 10	General Heat Transfer	115
18		17, 18	Cylindrical Pipe	Stainless Steel	8 inch	schedule 10	General Heat Transfer	115
19		18, 19	Cylindrical Pipe	Stainless Steel	8 inch	schedule 10	General Heat Transfer	115
20		19, 20	Cylindrical Pipe	Stainless Steel	8 inch	schedule 10	General Heat Transfer	115
21		21, 22	Cylindrical Pipe	Stainless Steel	12 inch	schedule 10	Adiabatic	
22		22, 23	Cylindrical Pipe	Stainless Steel	6 inch	schedule 40	Adiabatic	
23		23, 13	Cylindrical Pipe	Stainless Steel	6 inch	schedule 40	Adiabatic	
30		8, 30	Cylindrical Pipe	Stainless Steel	5 inch	schedule 40	Adiabatic	
31		14, 31	Cylindrical Pipe	Stainless Steel	8 inch	schedule 10	Adiabatic	

Pipe	Ambient Temp. Units	Special Condition
1		None
2		None
3		None
4		None
5		None
6	deg. F	None
7	deg. F	None
8	deg. F	None
9	deg. F	None
10	deg. F	None
11	deg. F	None
12	deg. F	None
13	deg. F	None
14	deg. F	None
15	deg. F	None
16	deg. F	None
17	deg. F	None
18	deg. F	None
19	deg. F	None
20	deg. F	None
21		None
22		None
23		None

AFT Arrow 3.0 Input (3 of 6) 3/25/2006 10:31 AM
DMJMH+N

AFT Arrow Model, OGTS Bypass System T-H Model Case 4 (Dirty Filters, NYB 1508, 115 °F Ambient, HT)

Pipe	Ambient Temp. Units	Special Condition
30		None
31		None

Pipe Loss Table

Pipe Losses	K Total	Standard Bends	Mitre Bends	Smooth Bends	Angle Valves	Ball Valves	Butterfly Valves	Cylinder Valves	Gate Valves	Globe Valves	Plug Valves	Poppet Valves
12	1.23			1 (0.13)								
13	0.11											
15	1.32											
21	1.42											
22	0.04											
23	0.11											

Pipe Losses	Three-way Valves	Swing Check Valves	Lift Check Valves	Tilting Disc Check Valves	Stop Check Valves	Sharp-edged Orifice	Long Orifice	Contractions	Expansions
12									
13									
15									
21									
22									
23									

Pipe Losses	Entrances	Exits	Differential Flowmeter	Honeycomb	Screen	Tee	Add'l Loss
12						1 (1.1)	
13							(0.11)
15						1 (1.1)	(0.22)
21							(1.42)
22						1 (0.04)	
23							(0.11)

Area Change Table

Area Change	Name	Object Defined	Elevation	Elevation Units	Initial Pressure	Initial Pressure Units	Database Source	Type	Geometry
3	Area Change	Yes	0	feet				Conical	Contraction
4	Area Change	Yes	0	feet				Conical	Expansion
5	Area Change	Yes	0	feet				Conical	Contraction
7	Area Change	Yes	0	feet				Conical	Contraction

Area Change	Angle	Loss Factor
3	22.	0.4399
4	22.	0.1552
5	22.	0.4404
7	28.	0.1241

Compressor/Fan Table

Compressor/Fan	Name	Object Defined	Elevation	Elevation Units	Initial Pressure	Initial Pressure Units	Database Source	Special Condition
17	N31-13D	Yes	0	feet				None

Compressor/Fan	Pump Type	Design Flow Rate	Design Flow Rate Units	Current Configuration	Independent Variable	Ind. Variable Units	Dependent Variable
17	Comp./Fan Curve				Vol. Flow Rate	ft3/min	Pressure Loss

AFT Arrow 3.0 Input (4 of 6) 3/25/2006 10:31 AM
DMJMH+N

AFT Arrow Model, OGTS Bypass System T-H Model Case 4 (Dirty Filters, NYB 1508, 115 °F Ambient, HT)

Compressor/Fan	Dep. Variable Units	Comp./Fan Curve Constant a	Comp./Fan Curve Constant b	Comp./Fan Curve Constant c	Comp./Fan Curve Constant d	Comp./Fan Curve Constant e
17	in. H2O std.	12.46429	2.571429E-03	-2.285714E-06	0	0

Compressor/Fan	Runout Flow Rate	Runout Flow Rate Units	Added Press. Type	Speed	Control Discharge	Control Discharge Units	Control When Exceeded Only	Compression Process
17			Static	100				Adiabatic

Dead End Table

Dead End	Name	Object Defined	Elevation	Elevation Units	Initial Pressure	Initial Pressure Units	Database Source
30	To Main OGTS	Yes	0	feet			
31	To Train B HEPA	Yes	0	feet			

General Component Table

General Component	Name	Object Defined	Elevation	Elevation Units	Initial Pressure	Initial Pressure Units	Database Source	Special Condition
2	HEPA Filter N02-010	Yes	0	feet				None
16	HEPA Filter 136/137	Yes	0	feet				None
18	Backdraft Damper	Yes	0	feet				None
22	Heater & HEPA Filter	Yes	0	feet				None

General Component	Loss Model	Loss Value	Independent Variable	Ind. Variable Units	Dependent Variable	Dep. Variable Units	Loss Constant a
2	General Polynomial	Variable	Vol. Flow Rate	ft3/min	Pressure Loss	in. H2O std.	-1.165517E-17
16	General Polynomial	Variable	Vol. Flow Rate	ft3/min	Pressure Loss	in. H2O std.	5.475221E-17
18	General Polynomial	Variable	Vol. Flow Rate	ft3/min	Pressure Loss	in. H2O std.	7.923767E-02
22	General Polynomial	Variable	Vol. Flow Rate	ft3/min	Pressure Loss	in. H2O std.	-2.602085E-17

General Component	Loss Constant b	Loss Constant c	Loss Constant d	Loss Constant e
2	0.00224	0	0	0
16	4.373333E-03	0	0	0
18	1.687181E-04	3.4618E-08	0	0
22	0.002502	0	0	0

Heat Exchanger Table

Heat Exchanger	Name	Object Defined	Elevation	Elevation Units	Initial Pressure	Initial Pressure Units	Database Source	Special Condition	Type
6	ICV Plenum	Yes	0	feet				None	

Heat Exchanger	Loss Model	Loss Value	Independent Variable	Ind. Variable Units	Dependent Variable	Dep. Variable Units	Loss Constant a	Loss Constant b	Loss Constant c
6	K Constant	1.5							

Heat Exchanger	Loss Constant d	Loss Constant e
6		

Tank Table

Tank	Name	Object Defined	Elevation	Elevation Units	Initial Pressure	Initial Pressure Units	Database Source	Pressure	Pressure Units	Temperature
1	Atm Pres	Yes	0	feet				14.3	psia	115
20	Atm Pres	Yes	0	feet				14.3	psia	115
21	Atm Pres	Yes	0	feet				14.3	psia	115

AFT Arrow 3.0 Input (5 of 6) 3/25/2006 10:31 AM
DMJMH+N

AFT Arrow Model, OGTS Bypass System T-H Model Case 4 (Dirty Filters, NYB 1508, 115 °F Ambient, HT)

Tank	Temperature Units	Balance Energy	Balance Concentration	(Pipe #1) K In, K Out	(Pipe #2) K In, K Out	(Pipe #3) K In, K Out	(Pipe #4) K In, K Out	(Pipe #5) K In, K Out	(Pipe #6) K In, K Out
1	deg. F	No	No	(P1) 0, 0					
20	deg. F	No	No	(P20) 0, 0					
21	deg. F	No	No	(P21) 0, 0					

Tank	(Pipe #7) K In, K Out	(Pipe #8) K In, K Out	(Pipe #9) K In, K Out	(Pipe #10) K In, K Out	(Pipe #11) K In, K Out	(Pipe #12) K In, K Out	(Pipe #13) K In, K Out	(Pipe #14) K In, K Out	(Pipe #15) K In, K Out
1									
20									
21									

Tank	(Pipe #16) K In, K Out	(Pipe #17) K In, K Out	(Pipe #18) K In, K Out	(Pipe #19) K In, K Out	(Pipe #20) K In, K Out	(Pipe #21) K In, K Out	(Pipe #22) K In, K Out	(Pipe #23) K In, K Out	(Pipe #24) K In, K Out
1									
20									
21									

Tank	(Pipe #25) K In, K Out
1	
20	
21	

Tee or Wye Table

Tee or Wye	Name	Object Defined	Elevation	Elevation Units	Initial Pressure	Initial Pressure Units	Database Source	Tee/Wye Type	Loss Type
8	Tee or Wye	Yes	0	feet				Round Straight	Detailed
9	Tee or Wye	Yes	0	feet				Round Straight	Detailed
11	Tee or Wye	Yes	0	feet				Round Straight	Detailed
13	Tee or Wye	Yes	0	feet				Round Straight	Detailed
14	Tee or Wye	Yes	0	feet				Round Straight	Detailed

Tee or Wye	Angle	Pipes A, B, C
8	135	
9	150	
11	30	
13	45	
14	135	

Valve Table

Valve	Name	Object Defined	Elevation	Elevation Units	Initial Pressure	Initial Pressure Units	Database Source	Special Condition	Exit Valve	Exit Pressure
10	HV-901	Yes	0	feet				Closed	No	
12	HV-902	Yes	0	feet				Closed	No	
15	V-166	Yes	0	feet				None	No	
19	V-167	Yes	0	feet				None	No	
23	V-178	Yes	0	feet				None	No	

Valve	Exit Pressure Units	CdA	CdA Units	Loss Model	Loss Value	Independent Variable	Ind. Variable Units	Dependent Variable	Dep. Variable Units	Loss Constant a
10				Cv Constant	1194					
12				Cv Constant	1194					
15				Cv Constant	2440					
19				Cv Constant	2440					
23				Cv Constant	300					

AFT Arrow Model, OGTS Bypass System T-H Model Case 4 (Dirty Filters, NYB 1508, 115 °F Ambient, HT)

Valve	Loss Constant b	Loss Constant c	Loss Constant d	Loss Constant e
10				
12				
15				
19				
23				

Title: AFT Arrow Model, OGTS Bypass System T-H Model Case 4 (Dirty Filters, NYB 1508, 115 °F Ambient, HT)
Analysis run on: 3/25/2006 10:29:55 AM
Application version: AFT Arrow Version 3.0 (2005.09.14)
Input File: M:\Demonstration Bulk VIT\Fiscal Year 2006 Work\Calculations\OGTS Bypass Thermal Hydraulics Analysis\Work Files\Bypass Flow 8 Inch Pipe Rev 1 Case 1.aro

Execution Time= 12.84 seconds
Total Number Of Pressure Iterations= 0
Total Number Of Flow Iterations= 56
Total Number Of Enthalpy Iterations= 56
Number Of Pipes= 25
Number Of Junctions= 25
Matrix Method= Gaussian Elimination

Length March Solution Method with Mach Number Limits
Length Step Size= 12 inches
Mach Number Increment= 0.01
Pressure Tolerance= 0.0001 relative change
Mass Flow Rate Tolerance= 0.0001 relative change
Enthalpy Tolerance= 0.0001 relative change
Flow Relaxation= (Automatic)
Pressure Relaxation= (Automatic)
Resistance Relaxation= (Automatic)

Fluid Database: AFT Standard
Fluid: Air
Max Fluid Temperature Data= 1000 deg. K
Min Fluid Temperature Data= 200 deg. K
Molecular Weight =28.97 amu
Gas Constant =0.06855 Btu/lbm-R
Critical Pressure =37.25 atm
Critical Temperature =132.41 deg. K
Acentric Factor =0.021
Equation of State= Redlich-Kwong
Enthalpy Model= Generalized
Specific Heat Ratio Accuracy = High
Atmospheric Pressure= 14.3 psia
Gravitational Acceleration= 1 g
Standard Pressure= 14.696 psia
Standard Temperature= 60 deg. F
Turbulent Flow Above Reynolds Number= 4000
Laminar Flow Below Reynolds Number= 2300
Total Inflow= 0.7111 lbm/sec
Total Outflow= 0.7111 lbm/sec
Total Energy Inflow= 148.2 Btu/s
Total Energy Outflow= 147.7 Btu/s
Total Heat Transferred Into System= -0.5443 Btu/s
Maximum Pressure is 14.33 psia at Junction 17 Outlet
Minimum Pressure is 13.76 psia at Junction 17 Inlet
Maximum Static Temperature is 124.7 deg. F at Junction 17 Outlet
Minimum Static Temperature is 115.0 deg. F at Junction 13 Inlet

Compressor/Fan Summary

Jct	Name	Mass Flow (scfm)	Vol. Flow (ft3/min)	DP Stag. (in. H2O std.)	DP Static (in. H2O std.)	Overall Efficiency (Percent)	Speed (Percent)	Overall Power (hp)	Comp. Ratio (Percent)	BEP Q (ft3/sec)	BEP Mass (lbm/sec)
17	N31-130	558.6	660.1	15.79	15.79	67.40	100.0	2.395	104.1	N/A	N/A

Jct	% of BEP (Percent)
17	N/A

Valve Summary

AFT Arrow 3.0 Output (2 of 5) 3/25/2008
DMJMH+N

AFT Arrow Model, OGTS Bypass System T-H Model Case 4 (Dirty Filters, NYB 1508, 115 °F Ambient, HT)

Jct	Name	Valve Type	Mass Flow (lbm/sec)	DP Stag (psid)	DP Static (psid)	P Static Inlet (psia)	K	Valve State	Cv	Cv Est.
X10	HV-901	REGULAR	0.0000	No Solution	No Solution	No Solution	No Solution	Closed By User	1,194.0	No Solution
X12	HV-902	REGULAR	0.0000	No Solution	No Solution	No Solution	No Solution	Closed By User	1,194.0	No Solution
15	V-166	REGULAR	0.7111	0.004593	0.004595	13.87	0.7810	Open	2,440.0	N/A
19	V-167	REGULAR	0.7111	0.004532	0.004534	14.32	0.7819	Open	2,440.0	N/A
23	V-178	REGULAR	0.7111	0.282496	0.282908	14.22	13.9251	Open	300.0	N/A

Heat Exchanger Summary

Jct	Name	Mass Flow (lbm/sec)	DPo (psid)	DP (psid)	DT Loss (deg. F)	T Inlet (deg. F)	T Outlet (deg. F)	Heat Rate In (Btu/s)
6	ICV Plenum	0	N/A	N/A	0	115.0	115.0	N/A

Pipe Output Table

Pipe	Name	Mass Flow (scfm)	Vol. Flow Avg (ft3/min)	Vel. In (feet/sec)	Vel. Out (feet/min)	Mach # In	Mach # Out	dP Stag. Total (in. H2O std.)	P Stag. In (in. H2O std. (g))	P Stag. Out (in. H2O std. (g))
1	Pipe	0.0	0.0	0.00	0.0	0.00000	0.00000	0.000000	0.0000	0.00000
2	Pipe	0.0	0.0	0.00	0.0	0.00000	0.00000	0.000000	0.0000	0.00000
3	3 FEs	0.0	0.0	0.00	0.0	0.00000	0.00000	0.000000	0.0000	0.00000
4	Pipe	0.0	0.0	0.00	0.0	0.00000	0.00000	0.000000	0.0000	0.00000
5	Pipe	0.0	0.0	0.00	0.0	0.00000	0.00000	0.000000	0.0000	0.00000
6	Pipe	0.0	0.0	0.00	0.0	0.00000	0.00000	0.000000	0.0000	0.00000
7	Pipe	0.0	0.0	0.00	0.0	0.00000	0.00000	0.000000	0.0000	0.00000
8	Pipe	0.0	0.0	0.00	0.0	0.00000	0.00000	0.000000	0.0000	0.00000
9	Pipe	0.0	0.0	0.00	0.0	0.00000	0.00000	0.000000	0.0000	0.00000
10	Pipe	0.0	0.0	0.00	0.0	0.00000	0.00000	0.000000	-10.6592	-10.65917
11	Pipe	0.0	0.0	0.00	0.0	0.00000	0.00000	0.000000	0.0000	0.00000
12	Pipe	0.0	0.0	0.00	0.0	0.00000	0.00000	0.000000	-10.6592	-10.65917
13	Pipe	0.0	0.0	0.00	0.0	0.00000	0.00000	0.000000	-10.6592	-10.65917
14	Pipe	558.6	653.5	28.75	1,729.0	0.02456	0.02461	0.851742	-10.6592	-11.51092
15	Pipe	558.6	654.5	28.82	1,730.5	0.02461	0.02463	0.316410	-11.5109	-11.82733
16	Pipe	558.6	655.0	28.85	1,731.4	0.02464	0.02464	0.076344	-11.9545	-12.03081
17	Pipe	558.6	660.0	29.07	1,744.5	0.02483	0.02483	0.022439	-14.8958	-14.91820
18	Pipe	558.6	644.4	28.39	1,702.9	0.02404	0.02404	0.032813	0.8677	0.83485
19	Pipe	558.6	644.6	28.40	1,703.6	0.02405	0.02405	0.004356	0.6325	0.62817
20	Pipe	558.6	643.7	28.40	1,698.2	0.02406	0.02403	0.529603	0.5027	-0.02690
21	Pipe	558.6	635.1	12.64	758.5	0.01079	0.01080	0.050975	0.0000	-0.05098
22	Pipe	558.6	638.3	53.02	3,181.7	0.04529	0.04529	0.032787	-1.6400	-1.67281
23	Pipe	558.6	651.7	54.10	3,250.8	0.04621	0.04628	0.533088	-9.4925	-10.02559
30	Pipe	0.0	0.0	0.00	0.0	0.00000	0.00000	0.000000	0.0000	0.00000
31	Pipe	0.0	0.0	0.00	0.0	0.00000	0.00000	0.000000	-11.5109	-11.51092

Pipe	P Static In (in. H2O std. (g))	P Static Out (in. H2O std. (g))	dT Stag. (deg. F)	T Stag. Inlet (deg. F)	T Stag. Outlet (deg. F)	T Static In (deg. F)	T Static Out (deg. F)	dH Stag. (Btu/lbm)	H Stag. In (Btu/lbm)
1	0.00000	0.00000	0.00000000	115.0	115.0	115.0	115.0	0.000000000	206.1
2	0.00000	0.00000	0.00000000	115.0	115.0	115.0	115.0	0.000000000	206.1
3	0.00000	0.00000	0.00000000	115.0	115.0	115.0	115.0	0.000000000	206.1
4	0.00000	0.00000	0.00000000	115.0	115.0	115.0	115.0	0.000000000	206.1
5	0.00000	0.00000	0.00000000	115.0	115.0	115.0	115.0	0.000000000	206.1
6	0.00000	0.00000	0.00000000	115.0	115.0	115.0	115.0	0.000000000	206.1
7	0.00000	0.00000	0.00000000	115.0	115.0	115.0	115.0	0.000000000	206.1

AFT Arrow 3.0 Output (3 of 5) 3/25/2006
DMJMH+N

AFT Arrow Model, OGTS Bypass System T-H Model Case 4 (Dirty Filters, NYB 1508, 115 °F Ambient, HT)

Pipe	P Static In (in. H2O std. (g))	P Static Out (in. H2O std. (g))	dT Stag. (deg. F)	T Stag. Inlet (deg. F)	T Stag. Outlet (deg. F)	T Static In (deg. F)	T Static Out (deg. F)	dH Stag. (Btu/lbm)	H Stag. In (Btu/lbm)
8	0.00000	0.00000	0.00000000	115.0	115.0	115.0	115.0	0.000000000	206.1
9	0.00000	0.00000	0.00000000	115.0	115.0	115.0	115.0	0.000000000	206.1
10	-10.65917	-10.65917	0.00000000	115.0	115.0	115.0	115.0	0.000000000	206.1
11	0.00000	0.00000	0.00000000	115.0	115.0	115.0	115.0	0.000000000	206.1
12	-10.65917	-10.65917	0.00000000	115.0	115.0	115.0	115.0	0.000000000	206.1
13	-10.65917	-10.65917	0.00000000	115.0	115.0	115.0	115.0	0.000000000	206.1
14	-10.82063	-11.67274	0.00549316	115.0	115.0	114.9	114.9	0.001502799	206.1
15	-11.67274	-11.98928	0.00018311	115.0	115.0	114.9	114.9	0.000114531	206.1
16	-12.11647	-12.19284	-0.00006104	115.0	115.0	114.9	114.9	0.000007439	206.1
17	-15.05904	-15.08148	0.00000000	115.0	115.0	114.9	114.9	0.000009230	206.1
18	0.70821	0.67548	-0.25451660	124.7	124.5	124.7	124.4	-0.062126137	208.4
19	0.47306	0.46873	-0.07147217	124.5	124.4	124.4	124.4	-0.017449771	208.4
20	0.34320	-0.18584	-2.81713867	124.4	121.6	124.4	121.5	-0.687473547	208.4
21	-0.03207	-0.08305	0.00036621	115.0	115.0	115.0	115.0	0.000000000	206.1
22	-2.20178	-2.23462	0.00000000	115.0	115.0	114.8	114.8	0.000000000	206.1
23	-10.06571	-10.59959	-0.00042725	115.0	115.0	114.8	114.8	0.000000000	206.1
30	0.00000	0.00000	0.00000000	115.0	115.0	115.0	115.0	0.000000000	206.1
31	-11.51092	-11.51092	0.00000000	115.0	115.0	115.0	115.0	0.000000000	206.1

Pipe	H Stag. Out (Btu/lbm)	H Static In (Btu/lbm)	H Static Out (Btu/lbm)	Rho Stag. In (lbm/ft3)	Rho Stag. Out (lbm/ft3)	Heat Transfer Model	Heat Flux (Btu/s-ft2)	Heat Rate (Btu/s)
1	206.1	206.1	206.1	0.06719	0.06719	Adiabatic	0.000E+00	0.000000000
2	206.1	206.1	206.1	0.06719	0.06719	Adiabatic	0.000E+00	0.000000000
3	206.1	206.1	206.1	0.06719	0.06719	Adiabatic	0.000E+00	0.000000000
4	206.1	206.1	206.1	0.06719	0.06719	Adiabatic	0.000E+00	0.000000000
5	206.1	206.1	206.1	0.06719	0.06719	Adiabatic	0.000E+00	0.000000000
6	206.1	206.1	206.1	0.06719	0.06719	Gen'l Heat Tran.	0.000E+00	0.000000000
7	206.1	206.1	206.1	0.06719	0.06719	Gen'l Heat Tran.	0.000E+00	0.000000000
8	206.1	206.1	206.1	0.06719	0.06719	Gen'l Heat Tran.	0.000E+00	0.000000000
9	206.1	206.1	206.1	0.06719	0.06719	Gen'l Heat Tran.	0.000E+00	0.000000000
10	206.1	206.1	206.1	0.06539	0.06539	Gen'l Heat Tran.	0.000E+00	0.000000000
11	206.1	206.1	206.1	0.06719	0.06719	Gen'l Heat Tran.	0.000E+00	0.000000000
12	206.1	206.1	206.1	0.06539	0.06539	Gen'l Heat Tran.	0.000E+00	0.000000000
13	206.1	206.1	206.1	0.06539	0.06539	Gen'l Heat Tran.	0.000E+00	0.000000000
14	206.1	206.0	206.1	0.06539	0.06524	Gen'l Heat Tran.	2.987E-06	0.001068698
15	206.1	206.1	206.1	0.06524	0.06519	Gen'l Heat Tran.	1.615E-06	0.000081448
16	206.1	206.1	206.1	0.06517	0.06515	Gen'l Heat Tran.	1.617E-06	0.000005290
17	206.1	206.1	206.1	0.06467	0.06466	Gen'l Heat Tran.	3.010E-06	0.000006563
18	208.4	208.4	208.4	0.06622	0.06624	Gen'l Heat Tran.	-5.789E-03	-0.044180289
19	208.4	208.4	208.3	0.06621	0.06621	Gen'l Heat Tran.	-5.691E-03	-0.012409204
20	207.7	208.3	207.7	0.06619	0.06643	Gen'l Heat Tran.	-4.770E-03	-0.488388919
21	206.1	206.1	206.1	0.06719	0.06719	Adiabatic	0.000E+00	0.000000000
22	206.1	206.0	206.0	0.06692	0.06691	Adiabatic	0.000E+00	0.000000000
23	206.1	206.0	206.0	0.06558	0.06549	Adiabatic	0.000E+00	0.000000000
30	206.1	206.1	206.1	0.06719	0.06719	Adiabatic	0.000E+00	0.000000000
31	206.1	206.1	206.1	0.06524	0.06524	Adiabatic	0.000E+00	0.000000000

All Junction Table

Jct	Name	Mass Flow Thru Junction (scfm)	dP Stag. Total (in. H2O std.)	P Stag. In (in. H2O std. (g))	P Stag. Out (in. H2O std. (g))	P Static In (in. H2O std. (g))	P Static Out (in. H2O std. (g))
1	Atm Pres	0.0	0.0000	0.00000	0.0000	0.00000	0.0000
2	HEPA Filter N02-010	0.0	0.0000	0.00000	0.0000	0.00000	0.0000

AFT Arrow 3.0 Output (4 of 5) 3/25/2006
DMJMH+N

AFT Arrow Model, OGTS Bypass System T-H Model Case 4 (Dirty Filters, NYB 1508, 115 °F Ambient, HT)

Jct	Name	Mass Flow Thru Junction (scfm)	dP Stag. Total (in. H2O std.)	P Stag. In (in. H2O std. (g))	P Stag. Out (in. H2O std. (g))	P Static In (in. H2O std. (g))	P Static Out (in. H2O std. (g))
3	Area Change	0.0	0.0000	0.00000	0.0000	0.00000	0.0000
4	Area Change	0.0	0.0000	0.00000	0.0000	0.00000	0.0000
5	Area Change	0.0	0.0000	0.00000	0.0000	0.00000	0.0000
6	ICV Plenum	0.0	0.0000	0.00000	0.0000	0.00000	0.0000
7	Area Change	0.0	0.0000	0.00000	0.0000	0.00000	0.0000
8	Tee or Wye	0.0	0.0000	0.00000	0.0000	0.00000	0.0000
9	Tee or Wye	0.0	0.0000	0.00000	0.0000	0.00000	0.0000
X10	HV-901	0.0	No Solution	No Solution	-10.6592	No Solution	-10.6592
11	Tee or Wye	0.0	0.0000	-10.65917	-10.6592	-10.65917	-10.6592
X12	HV-902	0.0	No Solution	No Solution	-10.6592	No Solution	-10.6592
13	Tee or Wye	N/A	See Losses	-10.65917	-10.6592	-10.99493	-10.9949
14	Tee or Wye	N/A	0.0000	-11.51092	-11.5109	-11.67274	-11.6727
15	V-168	558.6	0.1271	-11.82733	-11.9545	-11.98928	-12.1165
16	HEPA Filter 136/137	558.6	2.8650	-12.03081	-14.8958	-12.19284	-15.0590
17	N31-130	558.6	-15.7859	-14.91820	0.8677	-15.08148	0.7082
18	Backdraft Damper	558.6	0.2023	0.83485	0.6325	0.67548	0.4731
19	V-167	558.6	0.1255	0.62817	0.5027	0.46873	0.3432
20	Atm Pres	558.6	0.0000	0.00000	0.0000	0.00000	0.0000
21	Atm Pres	558.6	0.0000	0.00000	0.0000	0.00000	0.0000
22	Heater & HEPA Filter	558.6	1.5891	-0.05098	-1.6400	-0.08305	-2.2018
23	V-178	558.6	7.8197	-1.67281	-9.4925	-2.23462	-10.0657
30	To Main OGTS	0.0	0.0000	0.00000	0.0000	0.00000	0.0000
31	To Train B HEPA	0.0	0.0000	-11.51092	-11.5109	-11.51092	-11.5109

Jct	dT Stag. (deg. F)	T Stag. Inlet (deg. F)	T Stag. Outlet (deg. F)	T Static In (deg. F)	T Static Out (deg. F)	dH Stag. (Btu/lbm)	H Stag. In (Btu/lbm)	H Stag. Out (Btu/lbm)	H Static In (Btu/lbm)	H Static Out (Btu/lbm)
1	0.00000000	115.0	115.0	115.0	115.0	0.000	206.1	206.1	206.1	206.1
2	0.00000000	115.0	115.0	115.0	115.0	0.000	206.1	206.1	206.1	206.1
3	0.00000000	115.0	115.0	115.0	115.0	0.000	206.1	206.1	206.1	206.1
4	0.00000000	115.0	115.0	115.0	115.0	0.000	206.1	206.1	206.1	206.1
5	0.00000000	115.0	115.0	115.0	115.0	0.000	206.1	206.1	206.1	206.1
6	0.00000000	115.0	115.0	115.0	115.0	0.000	206.1	206.1	206.1	206.1
7	0.00000000	115.0	115.0	115.0	115.0	0.000	206.1	206.1	206.1	206.1
8	0.00000000	115.0	115.0	115.0	115.0	N/A	206.1	206.1	206.1	206.1
9	0.00000000	115.0	115.0	115.0	115.0	N/A	206.1	206.1	206.1	206.1
X10	No Solution	No Solution	115.0	No Solution	115.0	0.000	No Solution	206.1	No Solution	206.1
11	0.00000000	115.0	115.0	115.0	115.0	N/A	206.1	206.1	206.1	206.1
X12	No Solution	No Solution	115.0	No Solution	115.0	0.000	No Solution	206.1	No Solution	206.1
13	0.00000000	115.0	115.0	114.9	114.9	N/A	206.1	206.1	206.0	206.0
14	0.00000000	115.0	115.0	114.9	114.9	N/A	206.1	206.1	206.1	206.1
15	-0.00006104	115.0	115.0	114.9	114.9	0.000	206.1	206.1	206.1	206.1
16	-0.00231934	115.0	115.0	114.9	114.9	0.000	206.1	206.1	206.1	206.1
17	9.75256348	115.0	124.7	114.9	124.7	-2.377	206.1	208.4	206.1	208.4
18	-0.00018311	124.5	124.5	124.4	124.4	0.000	208.4	208.4	208.4	208.4
19	-0.00012207	124.4	124.4	124.4	124.4	0.000	208.4	208.4	208.3	208.3
20	0.00000000	115.0	115.0	115.0	115.0	0.000	206.1	206.1	206.1	206.1
21	0.00000000	115.0	115.0	115.0	115.0	0.000	206.1	206.1	206.1	206.1
22	-0.00158691	115.0	115.0	115.0	114.8	0.000	206.1	206.1	206.1	206.0
23	-0.00634766	115.0	115.0	114.8	114.8	0.000	206.1	206.1	206.0	206.0
30	0.00000000	115.0	115.0	115.0	115.0	0.000	206.1	206.1	206.1	206.1
31	0.00000000	115.0	115.0	115.0	115.0	0.000	206.1	206.1	206.1	206.1

AFT Arrow 3.0 Output (5 of 5) 3/25/2006
DMJMH+N

AFT Arrow Model, OGTS Bypass System T-H Model Case 4 (Dirty Filters, NYB 1508, 115 °F Ambient, HT)

Jct	Sonic Area (feet2)
1	0.00000
2	0.00000
3	0.00000
4	0.00000
5	0.00000
6	0.00000
7	0.00000
8	N/A
9	N/A
X10	0.00000
11	N/A
X12	0.00000
13	N/A
14	N/A
15	0.01608
16	0.01609
17	0.01621
18	0.01570
19	0.01570
20	0.01569
21	0.01560
22	0.01560
23	0.01567
30	0.00000
31	0.00000

Junction Loss Table

Jct	Pipe #	Pipe Dir.	dP Stag. Total (in. H2O std.)
8	P7	In	0.000
	P30	Out	0.000
	P8	Out	0.000
9	P8	In	0.000
	P9	Out	0.000
	P11	Out	0.000
11	P10	In	0.000
	P13	Out	0.000
	P12	In	0.000
13	P13	In	0.000
	P14	Out	0.000
	P23	In	0.6336
14	P14	In	0.000
	P15	Out	0.000
	P31	Out	0.000

DMJM H&N | AECOM

Attachment 3

Calculation No. 145579-D-CA-056	**ORIGINATOR:** John Irwin 03-25-2006
Rev. No. : 1	
Calculation Title : DBVS OGTS Bypass System Thermal Hydraulics Analysis	**CHECKER:** Jack McConwell 3-26-06

OGTS Bypass System Fluid Flow Model Input Data

This page intentionally left blank.

OGTS Bypass System Fluid Flow Model Input Data, Piping/Component Descriptions and Flow Loss Coefficients.

OGTS Bypass System Fluid Flow Model									
	Component	Details	Size	Schedule	Inside Dia.	L	ASHRAE Fitting No	ASHRAE Loss Coef.	Cv
			(in)		(in)	(in)			
	ICV Box plenum HEPA filter, 35-N02-010, Stream No. 9								
J1	Atmospheric Junction								
P1	Inlet Housing and screen	16" square Intake with birdscreen, (60% open) S.Stl	16 x 16		17.49		CR6-1/ER3-1	2.120	
"	Inlet Piping, 6-AA-35-0218	6" straight duct, S.Stl	6	40S	6.065	64.000	CD11-1	ARROW	
P1	N02-010 Inlet Transition	Flanders, Sudden Expansion, 6 dia x 24 SQ, 180°	6	40S	6.357/24.0 SQ		ED4-2	0.810	
					Total	64.000	inches	2.930	
						5.333	ft		
J2	HEPA Filter, 36-N02-010 Pre	Flanders, 0.12" w.c. (0.24" Dirty) at 500 cfm							
J2	HEPA Filter, 36-N02-010	Flanders, 1.0" w.c. (2.0" Dirty) at 500 cfm, P-007-W-43-N2-NU-51-23-GG-DU5	24 x 24 x 16						

OGTS Bypass System Fluid Flow Model Input Data, Piping/Component Descriptions and Flow Loss Coefficients.

OGTS Bypass System Fluid Flow Model									
	Component	Details	Size	Schedule	Inside Dia.	L	ASHRAE Fitting No	ASHRAE Loss Coef.	Cv
			(in)		(in)	(in)			
P2	Outlet Transition	Flanders, Sudden Contraction, 24 x 6			12.0 SQ/6.357 Rnd		ED1-1	0.500	
"	Piping, 6-AA-35-0218	6" straight duct, S.Stl	6	40S	6.065	42.000	CD11-1	ARROW	
"	Elbow No. 1	90° Elbow, R/D = 1.5, S.Stl	6	40S	6.065		CD3-1	0.130	
"	Piping, 6-AA-35-0218	6" straight duct, S.Stl	6	40S	6.065	62.000	CD11-1	ARROW	
P2	Elbow No. 2	45° Elbow, R/D = 1.5, S.Stl	6	40S	6.065		CD3-3	0.080	
					Total	104.000	inches	0.210	
						8.667	ft		
J3	Reducer	6" x 4", 22°	6 x 4	40S	6.065/4.025"	5.500	ARROW	ARROW	
P3	Piping, 4-AA-35-0218	4" straight duct, S.Stl	4	40S	4.025	163.000	CD11-1	ARROW	
P3	Flowmeter	3 ea Size 1 Annubar flowmeter	4				Vendor	1.635	
					Total	163.000	inches	1.635	
						13.583	ft		
J4	Reducer	6" x 4", 22°	4 x 6	40S	4.025/6.065"	5.500	ARROW	ARROW	

OGTS Bypass System Fluid Flow Model Input Data, Piping/Component Descriptions and Flow Loss Coefficients.

OGTS Bypass System Fluid Flow Model									
	Component	Details	Size	Schedule	Inside Dia.	L	ASHRAE Fitting No	ASHRAE Loss Coef.	Cv
			(in)		(in)	(in)			
P4	Elbow No. 1	45° Elbow, R/D = 1.5, S.Stl	6	40S	6.065		CD3-3	0.080	
"	Piping, 6-AA-35-0218	6" straight duct, S.Stl	6	40S	6.065	6.000	CD11-1	ARROW	
"	Elbow No. 2	45° Elbow, R/D = 1.5, S.Stl	6	40S	6.065		CD3-3	0.080	
P4	Piping, 6-AA-35-0218	6" straight duct, S.Stl	6	40S	6.065	33.000	CD11-1	ARROW	
					Total	39.000	inches	0.160	
						3.25	ft		
J5	Reducer	6" x 4" 22°	6 x 4	40S	6.065/4.025"	5.500	ARROW	ARROW	
P5	Expansion Joint, EJ-501	4"	4		4.025	22.000	CR6-3	0.32	
	(ICV Box CP)								
	ICV Box Plenum, Stream No. 9 in, 13 out								
J6	ICV Box plenum CPs (inlet/outlet)	Inlet and Outlet Losses					Crane	1.500	
	ICV Outlet to Bypass Tie Point, Stream No. 13								
	(ICV Box CP)								
P6	Piping, 6-VOG-35-0217	6" Duct w 90° Elbow, Internal to AWTE	6	40S	6.065	72.00	CD11-1	ARROW	

OGTS Bypass System Fluid Flow Model Input Data, Piping/Component Descriptions and Flow Loss Coefficients.

OGTS Bypass System Fluid Flow Model									
	Component	Details	Size	Schedule	Inside Dia.	L	ASHRAE Fitting No	ASHRAE Loss Coef.	Cv
			(in)		(in)	(in)			
P6	Elbow	90° Elbow, R/D = 1.5	5	40S	5.295		CD3-1	0.150	
J7	Reducer	6" x 5", 28°	6 x 5	40S	6.065/5.782"	10.250	ARROW	ARROW	
P7	Expansion Joint, EJ-502	DME 5" size	5		4.9	24.000	CR6-3	0.270	
"	Piping, 5-VOG-35-0217	5" Duct	5	40S	5.295	24.000	CD11-1	ARROW	
"	Elbow	45° Elbow, R/D = 1.5	5	40S	5.295		CD3-3	0.10	
"	Piping, 5-VOG-35-0217	5" Duct	5	40S	5.295	93.500	CD11-1	ARROW	
P7	Elbow	45° Elbow, R/D = 1.5	5	40S	5.295		CD3-3	0.10	
					Total	141.500	inches	0.470	
						11.792	ft		
J8	Lateral Wye (For Bypass Flow)	45° Lateral Branch Flow, Main Flow Closed	5 x 5 x 5	40S	5.295	10.000	ARROW	ARROW	
	OGTS Bypass Main Ducting from Tie Point to HEPA inlet, Stream No. 13								
J8	Lateral Wye (For Bypass Flow)						ARROW	ARROW	
P8	Elbow	45° Elbow, R/D = 1.5	5	40S	5.295		CD3-3	0.090	
P8	Reducer	Standard Reducer, 5x6", 11°	6 x 5	40S	5.295/6.065	6.000	ED4-1	0.050	

OGTS Bypass System Fluid Flow Model Input Data, Piping/Component Descriptions and Flow Loss Coefficients.

OGTS Bypass System Fluid Flow Model									
	Component	Details	Size	Schedule	Inside Dia.	L	ASHRAE Fitting No	ASHRAE Loss Coef.	Cv
			(in)		(in)	(in)			
J9	Lateral Wye, Forward Direction	30° Lateral Wye, Main Flow	6 x 6 x 6	40S	6.065	6.000	ARROW	ARROW	
P9	Piping, 6-VOG-36-0286	6" straight duct, S.Stl	6	40S	6.065	10.500	CD11-1	ARROW	
J10	Valve, HV-901	6" Keystone, FIG. 362-173, Key-Lok	6		5.8125	2.250	ARROW	ARROW	1194
P10	Elbow	90° Elbow, R/D = 1.5, S.Stl	6	40S	6.065		CD3-1	0.050	
P10	Piping, 6-VOG-36-0286	6" straight duct, S.Stl	6	40S	6.065	8.000	CD11-1	ARROW	
J11	Lateral Wye Reverse Direction	30° Lateral Wye, Main Flow	6 x 6 x 6	40S	6.065	6.000	ARROW	ARROW	
P11	Piping, 6-VOG-36-0286	6" straight duct, S.Stl	6	40S	6.065	6.000	CD11-1	ARROW	
P11	Elbow	30° Elbow, R/D = 1.5, S.Stl	6	10S	6.065		CD3-1	0.050	
J12	Valve, HV-902	6" Keystone, FIG. 362-173, Key-Lok	6		5.8125	2.250	ARROW	ARROW	1194
P12	Piping, 6-VOG-36-0286	6" straight duct, S.Stl	6	40S	6.065	6.000	CD11-1	ARROW	
P12	Std Tee	6" Std Tee, Branch flow	6	40S	6.065		ARROW	ARROW	
P12	Piping, 6-VOG-36-0286	6" straight duct, S.Stl	6	40S	6.065	6.000	CD11-1	ARROW	

OGTS Bypass System Fluid Flow Model Input Data, Piping/Component Descriptions and Flow Loss Coefficients.

OGTS Bypass System Fluid Flow Model									
	Component	Details	Size	Schedule	Inside Dia.	L	ASHRAE Fitting No	ASHRAE Loss Coef.	Cv
			(in)		(in)	(in)			
P12	Elbow	30° Elbow, R/D = 1.5, S.Stl	6	40S	6.065		CD3-1	0.130	
J11	Lateral Wye Reverse Direction	30° Lateral Wye, Branch Flow	6 x 6 x 6	40S	6.065	6.000	ARROW	ARROW	
P13	Piping, 6-VOG-36-0286	6" straight duct, S.Stl	6	40S	6.065	6.000	CD11-1	ARROW	
P13	Reducer	6 x 8 Std Reducer, 19°	6 x 8	40S	6.065/8.329		ED4-1	0.170	
P13	Elbow #1	90° Elbow, R/D = 1.5, S.Stl	8	10S	8.329		CD3-1	0.110	
P13	Piping, 8-VOG-36-0286	8" straight duct, S.Stl	8	10S	8.329	114.000	CD11-1	ARROW	
P13	EJ-635	8" Expansion joint	8	10S	7.900	11.000	CR6-3	0.110	
P13	Piping, 8-VOG-36-0286	8" straight duct, S.Stl	8	10S	8.329	120.000	CD11-1	ARROW	
					Total	251.000	inches	0.390	
						20.917	ft		
J13	Lateral Wye, Forward Direction	45° Lateral Trough Flow (Air Inlet Bleed System@ Branch flow)	8	10S	8.329	10.000	ARROW	ARROW	
P14	Piping, 8-VOG-36-0286	8" straight duct, S.Stl	8	10S	8.329	138.000	CD11-1	ARROW	
"	Elbow #1	90° Elbow, R/D = 1.5, S.Stl	8	10S	8.329		CD3-1	0.110	

OGTS Bypass System Fluid Flow Model Input Data, Piping/Component Descriptions and Flow Loss Coefficients.

OGTS Bypass System Fluid Flow Model									
	Component	Details	Size	Schedule	Inside Dia.	L	ASHRAE Fitting No	ASHRAE Loss Coef.	Cv
			(in)		(in)	(in)			
"	Piping, 8-VOG-36-0286	8" straight duct, S.Stl	8	10S	8.329	15.000	CD11-1	ARROW	
"	Expansion Joint, EJ-635 + 5 others	8" Expansion joint	8		7.900	11.000	CR6-3	0.660	
P14	Piping, 8-VOG-36-0286	8" straight duct, S.Stl	8	10S	8.329	1805.000	CD11-1	ARROW	
					Total	1969.000	inches	0.770	
						164.083	ft		
J14	45° Lateral	45° Lateral Flow Thru branch closed	8 x 8 x 8	10S	8.329		ARROW	ARROW	
P15	Piping, 8-VOG-36-0286	8" straight duct, S.Stl	8	10S	8.329	65.500	CD11-1	ARROW	
"	Elbow #2	90° Elbow, R/D = 1.5, S.Stl	8	10S	8.329		CD3-1	0.110	
"	Piping, 8-VOG-36-0286	8" straight duct, S.Stl	8	10S	8.329	100.000	CD11-1	ARROW	
"	Std Tee	Std Tee, Branch flow, main flow dead	8 x 8 x 8	10S	8.329		ARROW	1.10	
"	Piping, 8-VOG-36-0286	8" straight duct, S.Stl	8	10S	8.329	101.000	CD11-1	ARROW	
P15	Expansion Joint, EJ-615	8" Expansion joint	8		7.900	11.000	CR6-3	0.110	
	(HEPA Inlet)				Total	277.500	inches	1.320	
						23.125	ft		

OGTS Bypass System Fluid Flow Model Input Data, Piping/Component Descriptions and Flow Loss Coefficients.

OGTS Bypass System Fluid Flow Model									
	Component	Details	Size	Schedule	Inside Dia.	L	ASHRAE Fitting No	ASHRAE Loss Coef.	Cv
			(in)		(in)	(in)			
	OGTS Bypass HEPA Filter Skid	HEPA Filter skid Assembly, 36-D58-138							
J15	Isolation Valve, 36-V-166	8" Keystone, FIG. 362-173, Key-Lok	8		7.625	2.500	ARROW	ARROW	2440
P16	Inlet Transition	Flanders 8 OD x 15 W x 18 H x 18 L, 30°			8.329	18.000	ED4-2	0.430	
J16	HEPA Pre-Filter, 36-N02-136	Flanders 24 W x 24 H x 14 L, 0.12" w.c. (0.24" Dirty) at 750 cfm				14.000			
J16	Test Combination Housing	Flanders 24 W x 24 H x 20 L, 0.5" w.c at 750 acfm				20.000			
J16	HEPA Filter, 36-N02-131	Flanders 24 W x 24 H x 19.375 L, 1.0" w.c. (2.0" Dirty) at 750 acfm				20.000	ARROW	ARROW	
J16	Test Outlet Housing	Flanders 24 W x 24 H x 20 L, 0.5" w.c at 750 cfm				20.000			

OGTS Bypass System Fluid Flow Model Input Data, Piping/Component Descriptions and Flow Loss Coefficients.

OGTS Bypass System Fluid Flow Model									
	Component	Details	Size	Schedule	Inside Dia.	L	ASHRAE Fitting No	ASHRAE Loss Coef.	Cv
			(in)		(in)	(in)			
J16	Outlet Transition	Flanders 8 OD x 15 W x 18 H x 12 L, 45°			8.329	12.000	SD4-2	0.060	.04" @ 750 cfm
	OGTS Bypass HEPA Filter Skid Outlet Ducting With Fan to Stack								
P17	S1, Piping, 8-VOG-36-0319	8" straight duct, S.Stl, w 8 x 8 x 1 red tee, flow thru	8	10S	8.329	12.000	CD11-1	ARROW	
P17	Expansion Joint, EJ-616	8" Expansion joint	8	10S	7.625		CR6-3	0.110	
					Total	12.000	inches	0.110	
						1.000	ft		
J17	Fan, 36-N31-130	1125 ACFM Fan, NYB 1508, See Data Below					ARROW	ARROW	
P18	Elbow	90° Elbow, R/D = 1.5, S.Stl	8	10S	8.329		CD3-1	0.110	
"	Piping, 8-VOG-36-0319	8" straight duct, S.Stl	8	10S	8.329	6.000	CD11-1	ARROW	
P18	Piping, 8-VOG-36-0319	8" straight duct, S.Stl	8	10S	8.329	36.000	CD11-1	ARROW	
					Total	42.000	inches	0.110	

OGTS Bypass System Fluid Flow Model Input Data, Piping/Component Descriptions and Flow Loss Coefficients.

OGTS Bypass System Fluid Flow Model									
	Component	Details	Size	Schedule	Inside Dia.	L	ASHRAE Fitting No	ASHRAE Loss Coef.	Cv
			(in)		(in)	(in)			
						3.500	ft		
J18	Backdraft Damper	SNUPPS Data See Below					ARROW	ARROW	
P19	Piping, 8-VOG-36-0319	8" straight duct, S.Stl	8	10S	8.329	12.000	CD11-1	ARROW	
J19	Isolation Valve, 36-V-166	8" Keystone, FIG. 362-173, Key-Lok	8		7.625	2.500	ARROW	ARROW	2440
P20	Piping, 8-VOG-36-0319	8" straight duct, S.Stl	8	10S	8.329		CD11-1	ARROW	
"	Expansion Joint, EJ-617	8" Expansion joint	8	10S	7.625	11.000	CR6-3	0.110	
"	Lateral Wye, Forward Direction	45° Lateral Branch Flow	8	10S	8.329	24.000	ED5-1	0.610	
"	Piping, 8-VOG-36-0319	8" straight duct, S.Stl	8	10S	8.329	108.000	CD11-1	ARROW	
"	Piping, 8-VOG-36-0319	8" straight duct, S.Stl	8	10S	8.329	246.000	CD11-1	ARROW	
"	Elbow	90° Elbow, R/D = 1.5, S.Stl	8	10S	8.329		CD3-1	0.110	
"	Piping, 8-VOG-36-0319	8" straight duct, S.Stl	8	10S	8.329	34.000	CD11-1	ARROW	
"	Elbow	90° Elbow, R/D = 1.5, S.Stl	8	10S	8.329		CD3-1	0.110	
"	Piping, 8-VOG-36-0319	8" straight duct, S.Stl	8	10S	8.329	144.000	CD11-1	ARROW	
"	Reducer	8 x 12 Std Reducer, 28.5°	8 x 12	10S	8.329/12.39	8.000	ED4-1	0.330	
P20	Sudden Expansion	12 x large	12 x 56				ED4-1	0.880	
					Total	564.000	inches	2.040	

OGTS Bypass System Fluid Flow Model Input Data, Piping/Component Descriptions and Flow Loss Coefficients.

OGTS Bypass System Fluid Flow Model									
	Component	Details	Size	Schedule	Inside Dia.	L	ASHRAE Fitting No	ASHRAE Loss Coef.	Cv
			(in)		(in)	(in)			
						47.000	ft		
J20	OGTS Stack	1 atm pressure							
J21	Atmospheric Pressure Junction								
P21	Inlet Screen	16" Cicular Intake with birdscreen, (60% open) S.Stl	16		15.624		CD6-1	0.970	
"	Reducer	16" x 12"	16 x 12	10S	15.624/12.39	14.000	ED4-1	0.120	
"	Inlet Piping, 12-VOG-36-0409	12" straight duct, S.Stl	12	10S	12.39	90.000	CD11-1	ARROW	
"	Elbow #1	90° Elbow, R/D = 1.5, S.Stl	12	10S	12.39		CD3-1	0.110	
"	Elbow #2	90° Elbow, R/D = 1.5, S.Stl	12	10S	12.39		CD3-1	0.110	
P21	Elbow #3	90° Elbow, R/D = 1.5, S.Stl	12	10S	12.39		CD3-1	0.110	
					Total	104.000	inches	1.420	
						8.667	ft		

OGTS Bypass System Fluid Flow Model Input Data, Piping/Component Descriptions and Flow Loss Coefficients.

OGTS Bypass System Fluid Flow Model									
	Component	Details	Size	Schedule	Inside Dia.	L	ASHRAE Fitting No	ASHRAE Loss Coef.	Cv
			(in)		(in)	(in)			
J22	HEPA Inlet Transition	Flanders, Transition 12" x 28" SQ x 11.25" L, 30°			12.0 dia x 28" SQ	11.250	ARROW	ARROW	0.01" @ 250 cfm
J22	Heater Element, 36-N84-140	Watlow/Chromalox 0.25" w.c. @ 1000 cfm				2.000			
J22	HEPA Pre-Filter, 36-N02-135	Flanders, 0.12" w.c. (0.24: dirty) at 1000 cfm	24 x 24			2.000			
J22	HEPA Filter, 36-N02-134	Flanders, 1.0" w.c. (2.0" dirty) at 1000 cfm, P-007-W-43-N2-NU-51-23-CC-FU5	24 x 24			5.875			
J22	Outlet Transition	Flanders, Transition 6" x 28" SQ x 11.25" L, 45°			6.065 dia x 28" SQ	11.250			0.002" @ 250 cfm
		Total Pressure drop at 1000 cfm	1.382						

OGTS Bypass System Fluid Flow Model Input Data, Piping/Component Descriptions and Flow Loss Coefficients.

OGTS Bypass System Fluid Flow Model									
	Component	Details	Size	Schedule	Inside Dia.	L	ASHRAE Fitting No	ASHRAE Loss Coef.	Cv
			(in)		(in)	(in)			
P22	Piping, 6-VOG-36-0408	6" straight duct, S.Stl, w 6 x 6 x 1 red tee, flow thru	6	40S	6.357	6.000	CD11-1	ARROW	
J23	Valve, 36-V-178	6" Keystone, Variable Cv	6			2.250	ARROW	ARROW	1194
P23	Piping, 6-VOG-36-0408	6" straight duct, S.Stl	6	40S	6.357	41.000	CD11-1	ARROW	
"	Elbow	90° Elbow, R/D = 1.5, S.Stl	6	40S	6.357		CD3-1	0.110	
"	Expansion Joint, EJ-614	6" Expansion Joint	6	40S	5.9	11.000	CR6-3	0.240	
"	Tee	6 x 6 x 1 tee, flow thru	6	40S	6.357	12.000	ED5-3	0.260	
P23	Piping, 6-VOG-36-0408	6" straight duct, S.Stl	6	40S	6.357	204.000	CD11-1	ARROW	
					Total	268.000	inches	0.610	
						22.333	ft		
J13	Wye #1	45° Lateral Branch Flow	6 x 8	40S	6.357/8.329"	10.000	ARROW	ARROW	
	Fan Curve, NYB Model No. 1508	Test Density: 0.0553 lbm/cu ft	Mechanical						

OGTS Bypass System Fluid Flow Model Input Data, Piping/Component Descriptions and Flow Loss Coefficients.

OGTS Bypass System Fluid Flow Model									
	Component	Details	Size	Schedule	Inside Dia.	L	ASHRAE Fitting No	ASHRAE Loss Coef.	Cv
			(in)		(in)	(in)			
	Q Ft/ Min	dP, IN H2O Std	Efficiency, %						
	0	12	67.36						
	500	13.75	67.36						
	1000	13	67.36						
	1500	11.25	67.36						
	2000	8	67.36						
	2500	4.25	67.36						
	3000	0	67.36						
	Backdraft Damper Pressure Drop	Ref. SNUPPS 90144							
		24 x 24 prototype	For 8" Pipe	Area	sch 10 Dia.				
	Vs, fpm	dP, inches w.c.	Q, CFM	sq. ft	ft.				
	700	0.13	264.9	0.378	0.694				
	800	0.135	302.7						
	900	0.14	340.5						
	1000	0.145	378.4						
	1500	0.18	567.6						
	2000	0.23	756.7						
	2500	0.27	945.9						

OGTS Bypass System Fluid Flow Model Input Data, Piping/Component Descriptions and Flow Loss Coefficients.

OGTS Bypass System Fluid Flow Model									
	Component	Details	Size	Schedule	Inside Dia.	L	ASHRAE Fitting No	ASHRAE Loss Coef.	Cv
			(in)		(in)	(in)			
	3000	0.32	1135.1						
	3500	0.36	1324.3						

This page intentionally left blank.

OGTS Bypass External Convection and Thermal Radiation Coefficients

McAdams Free Convection Correlations for air at 1 atm. (Holman 1990, Table 7-2)						
Tw1 =	875	°F	Temperature End 1			
Tw2 =	250	°F	Temperature End 2			
Ts =	562.5	°F	Average Wall Temperature			
To =	115	°F	Ambient Temperature			
dT =	447.5	°F	Temperature difference			
h =	1.45	Btu/hr-ft^2-°F	Vertical Plane or Cylinder		h = 0.19 * dT^1/3	
h =	1.38	Btu/hr-ft^2-°F	Horizontal Cylinder		h = 0.18 * dT^1/3	
h =	1.68	Btu/hr-ft^2-°F	Horizontal Plate - heated face up		h = 0.22 * dT^1/3	
Forced convection, flow across a cylinder (Holman 1990, eqn. 6-21):						

$$\overline{Nu}_{f,D} = 0.3 + \frac{0.62 Re_D^{1/2} Pr^{1/3}}{[1+(0.4/Pr)^{2/3}]^{1/4}} \left[1 + \left(\frac{Re_D}{282{,}000} \right)^{5/8} \right]^{4/5} \qquad Re_D \cdot Pr > 0.2$$

Nufd =	0.3+A*B/C	Forced Convection, Nusselt No.				
A =	$0.62Re_d^{1/2}Pr^{1/3}$	B =	[1+(Red/282,000)^5/8]^4/5	C =	[1+(0.4/Pr)^2/3]^1/4	
D =	8.6	Inch	Dia of Pipe	0.21844	meters	
U =	0.1	Mph	Free Stream Air Vel.	0.0447	m/s	
Ts =	562.5	°F	Pipe Wall Temperature	294.72	°C	
To =	115	°F	Ambient Temperature	46.11	°C	
Tf =	338.75	°F	Air Film Temperature	170.42	°C	
vf =	0.00019	sq ft/sec	Viscosity of Air	1.8E-05	sq. m/s	
Red =	5.45844E+02	Dimensionless	Reynolds No.			
Pr =	0.7778	Dimensionless	Prandtl No.			

OGTS Bypass External Convection and Thermal Radiation Coefficients

McAdams Free Convection Correlations for air at 1 atm. (Holman 1990, Table 7-2)						
kf =	0.0146	Btu/hr-ft-°F	Thermal Conductivity	0.0253	W/m-°C	

OGTS Bypass External Convection and Thermal Radiation Coefficients

McAdams Free Convection Correlations for air at 1 atm. (Holman 1990, Table 7-2)

The dimensionless numbers are:

Nusselt, $\overline{Nu_L} = \frac{\overline{h_c} L}{k_f}$ or $\overline{Nu_D} = \frac{\overline{h_c} D}{k_f}$;

Rayleigh, $Ra_L = \frac{g \cdot \beta \cdot \rho \cdot c_p (\Delta T) L^3}{\nu \cdot k_f}$ or $Ra_D = \frac{g \cdot \beta \cdot \rho \cdot c_p (\Delta T) D^3}{\nu \cdot k_f}$;

Reynolds, $Re_L = \frac{VL}{\nu}$ or $Re_D = \frac{VD}{\nu}$;

Prandtl, $Pr = \frac{\nu \cdot \rho \cdot c_p}{k_f}$;

Red*Pr =	424.57					
A =	13.322	B =	1.016	C =	1.132	
Stefan B =	1.714E-09	Btu/hr-ft^2-R^4				
emiss =	0.65					
Nufd =	12.26	Dimensionless	Forced Convection, Nusselt No.			
Nund =	67.50	Dimensionless	Natural Convection, Nusselt No.			
Nut = 0.3 + [(Nufd- c)^j + (Nund - c)^j]^(1/j)			Combined Forced and Natural Convection, Nusselt No.			
c =	0.3	for Horizontal cylinder				
j =	4	for Horizontal cylinder				
Nut =	67.52	Dimensionless				
hc =	1.38	Btu/hr-sq.ft-°F	Combined Convection	hc =	7.81977	Watt/sq m-°C

OGTS Bypass External Convection and Thermal Radiation Coefficients

McAdams Free Convection Correlations for air at 1 atm. (Holman 1990, Table 7-2)						
Radiation component:			$h_r = \frac{\sigma\varepsilon(T_s^4 - T_0^4)}{T_s - T_0}$			
Stefan B =	1.714E-09	Btu/hr-ft^2-R^4				
emiss =	0.65					
hr =	2.45	Btu/hr-sq.ft-°F	Th Radiation Coefficient			
ht =	hc + hr		Total HT Coefficient			
ht =	3.83	Btu/hr-sq.ft-°F	Total HT Coefficient			
q =	1712.29	Btu/hr-sq.ft	Specific Heat Loss			
A =	2.25	sq. ft	for cylinder 1 ft long			
Q =	3855.18	Btu/hr	for cylinder 1 ft long			
Q =	1129.84	Watts	for cylinder 1 ft long			
Q =	1.13	KW	for cylinder 1 ft long			

DMJM H&N | AECOM

Attachment 4

Calculation No. 145579-D-CA-056	**ORIGINATOR:** John Irwin 03-25-2006
Rev. No. : 1	
Calculation Title : DBVS OGTS Bypass System Thermal Hydraulics Analysis	**CHECKER:** Jack McConwell 3-26-06

Equipment Data Sheets

This page intentionally left blank.

Nuclear Grade HEPA Filters: *PUREFORM® Filters*

Standard Sizes and Capacities

Flanders manufactures standard square and rectangular Nuclear Grade filters in a variety of sizes and capacities. (Sizes and capacities for Round and Nipple-connected filters are listed in their respective sections in this bulletin.) The type (PUREFORM® or Separator-Type) and depth of the filter element is a primary factor in filter capacity.

NOTE: *The maximum allowable resistance at the Nominal Rated Capacity is 1.0 inch w.g. (or 1.3 inch w.g. for certain sizes listed in ASME AG-1, Section FC, Table FC-4000-1).*

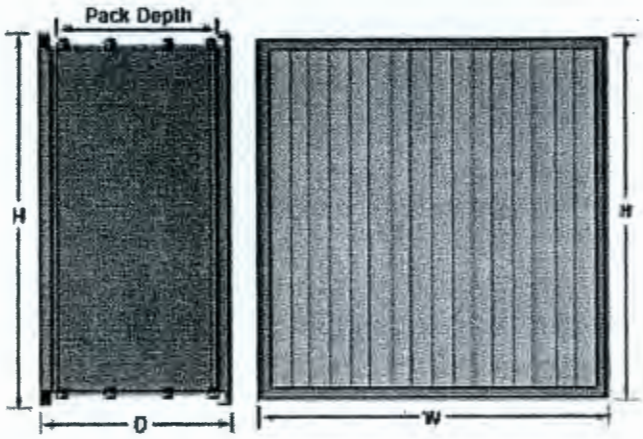

Available Filter Sizes and Capacities

11 inch PUREFORM® Filter Element

FILTER SIZE DESIGNATOR	DIMENSIONS H	W (INCHES)	D	CAPACITIES (CFM)	MAX. INITIAL RESISTANCE (INCHES)
CC-F	12	12	11 1/2	200	1.0 w.g.
CC-F	12	12	11 1/2	250	1.3 w.g.
CG-F	12	24	11 1/2	425	1.0 w.g.
GC-F	24	12	11 1/2	455	1.0 w.g.
GE-F	24	18	11 1/2	725	1.0 w.g.
GG-F	24	24	11 1/2	1000	1.0 w.g.
GG-F	24	24	11 1/2	1250	1.3 w.g.
GG-F	24	24	11 1/2	1500*	1.3 w.g.
GN-F	24	30	11 1/2	1275	1.0 w.g.

*media velocity exceeds 5 fpm

4 inch PUREFORM® Filter Element

FILTER SIZE DESIGNATOR	DIMENSIONS H	W (INCHES)	D	CAPACITIES (CFM)	MAX. INITIAL RESISTANCE (INCHES)
BB-D	8	8	5 7/8	50	1.3 w.g.
CC-D	12	12	5 7/8	125	1.3 w.g.
CG-D	12	24	5 7/8	245	1.0 w.g.
GC-D	24	12	5 7/8	250	1.0 w.g.
GE-D	24	18	5 7/8	375	1.0 w.g.
GG-D	24	24	5 7/8	500	1.0 w.g.
GN-D	24	30	5 7/8	625	1.0 w.g.

7

Keystone K-LOK Figure 360/362 and 370/372

ANSI/FCI 70-2 Control Valve Seat Leakage, Tolerances, and Test Specifications

ANSI B16.104-1976	Maximum Leakage			Test Medium	Pressure and Temperature
Class VI	Nominal Port Diameter (in.)	Bubbles per Minute[3]	ml. per Minute	Air or Nitrogen	Service ΔP or 50 psig [3.4 bar differential], whichever is lower, at 50° to 125°F [10° to 52°C]
	2	3	0.45		
	2½	4	0.60		
	3	6	0.90		
	4	11	1.70		
	6	27	4.00		
	8	45	6.75		
Class V	5 x 10-4 ml/min/psig/in. port dia. [5 x 10-12 m³/sec/bar differential/mm port dia.]			Water	Service ΔP at 50° to 125°F [10° to 52°C]
Class IV	0.01% valve capacity at full travel			Air or Water	Service ΔP or 50 psig [3.4 bar differential], whichever is lower, at 50° to 125°F [10° to 52°C]

Notes

1. K-LOK polymer, elastomer and fire-safe seats provide ANSI Class VI shutoff.
2. K-LOK metal seats provide ANSI Class IV shutoff.
3. Using the ANSI/FCI specified calibrated measuring device.

Reference ANSI/FCI 70-2 for further information.

Cv Values vs. Travel Position

Size (in.)	Angle of Opening 10°	20°	30°	40°	50°	60°	70°	80°	CL 150 90°	CL 300 90°
2	6	10	19	34	51	78	105	134	163	160
2½	6	10	19	34	53	80	111	148	175	170
3	8	12	24	43	67	100	139	186	220	215
4	16	23	44	80	130	194	269	360	425	413
5	30	44	83	149	242	368	504	673	795	785
6	50	70	130	230	370	550	760	1,010	1,195	1,140
8	83	117	251	437	695	1,052	1,496	2,001	2,440	2,300
10	144	202	454	754	1,185	1,821	2,611	3,541	4,540	4,333
12	208	304	678	1,051	1,625	2,766	3,838	5,325	6,915	6,600
14	257	360	747	1,186	1,909	3,121	4,416	6,225	8,300	7,920
16	305	432	803	1,422	2,259	3,614	5,251	7,530	10,040	9,580
18	373	548	1,121	1,869	2,990	4,735	6,728	9,845	12,460	11,890
20	463	690	1,390	2,315	4,010	6,175	8,795	12,655	15,430	14,720
24	650	991	2,076	3,803	6,060	9,091	13,301	18,466	21,660	20,665
30	1,015	1,550	3,240	4,670	9,460	14,200	21,400	29,800	36,000	35,500
36	1,460	2,300	4,640	5,950	13,700	21,000	30,400	44,000	56,000	55,500

Vacuum Rating

The combination of interference fit seats and bi-directional packing makes the K-LOK especially well suited for vacuum service.

Standard K-LOK high performance valves are rated to an absolute pressure of 4 x 10-5 inch Hg. Higher vacuum applications are available.

Actuator Selection

Actuator Type	Figure	Remark
Handle	F401	Lever lock
Gear	F420 and F500 Series	
Pneumatic	F79U	With extended travel adapter
Gear & Pneumatic	F453 + F79U	Declutchable gear unit provides manual override for the Keystone pneumatic actuator
Electric	F777	

The New York Blower Company
Fan-to-Size
Fan Selection Data

Project:	
Location:	
Contact:	

Fan Design

Product:	Pressure Blower	Arrangement:	8
Size/Model:	1508	Drive type:	Direct
Wheel Type:	Steel		
Wheel Material:	316 SST		
Wheel Width:	100.0 %	Wheel Diameter:	100.0 %

Operating Conditions

Volume Flow Rate:	1,125 CFM	Fan Speed:	3500 rpm
Fan Static Pressure:	12.8 in wg	Fan Input Power:	3.49 bhp
Outlet Velocity:	3223 ft/min	VP/SP ratio:	0.0374
Altitude (above mean sea level):	360 ft	Operating Temperature:	250 Deg F
Operating Inlet Airstream Density:	0.0553 lb/ft3		
Static Efficiency:	64.93%	Mechanical Efficiency:	67.36%
Maximum Operating Temperature:	250 Deg F	Maximum Safe Operating Speed:	4000 rpm

Standard Conditions

Volume Flow Rate:	1,125 CFM	Fan Speed:	3500 rpm
Fan Static Pressure:	17.4 in wg	Fan Input Power:	4.73 bhp
Density at Mean Sea Level :	0.0750 lb/ft3	Max. Safe Speed at 70 Deg F:	4000 rpm

Sound Power Level Ratings Levels expressed in dB (power levels reference 10^(-12) watts)

Center Frequency (Hz):	**63**	**125**	**250**	**500**	**1000**	**2000**	**4000**	**8000**	
Octave Bands:	**1**	**2**	**3**	**4**	**5**	**6**	**7**	**8**	**Overall**
Total Fan Power Levels*:	88.	95.	95.	89.	85.	83.	78.	76.	99.2
Inlet Power Levels**:	85.	92.	92.	86.	82.	80.	75.	73.	96.2
Outlet Power Levels**:	85.	92.	92.	86.	82.	80.	75.	73.	96.2

*As corrected for point of operation (location on fan curve)
**Unsilenced Inlet and Outlet power ratings are 3 dB lower than total fan power levels under the assumption that "half" of the sound power can be attributed to each opening. Silenced power ratings include this 3 dB reduction as well as the silencer attenuation.

Estimated Sound Pressure Levels Expressed in dB (pressure levels reference $2x10^{-7}$ microbar)

Directivity/Reflection Factor (Q) is 4, quarter-spherical radiation; Distance is 5 ft.; A-weighting is in use.

The estimated sound pressure level outside the fan due to an open inlet OR outlet is 80.6 dBA at 5.0 feet. The estimated sound pressure level outside the fan when BOTH inlet and outlet are ducted is 69.1 dBA at 5.0 feet (Housing Radiated Noise).

Your Representative:
Baxter Air Engineering
12625 NE Woodinville Dr
Woodinville, WA 98072-8206
Phone: (425) 486-6666
Fax: (425) 486-8260
E-Mail: baxter@baxair.com

Version: 1.71.1000-R (Feb, 2002) Printed: 01/19/2006 PDF

The New York Blower Company

Fan-to-Size

Pressure Blower
1508 Steel
Arr.: 8

Volume Flow Rate: 1,125 CFM
Fan Static Press.: 12.8 in wg
Speed: 3500 rpm
Power: 3.49 bhp

Temp.: 250 Deg F
Altitude: 360 ft
Density: 0.0553 lb/ft3
Outlet Velocity: 3223 ft/min

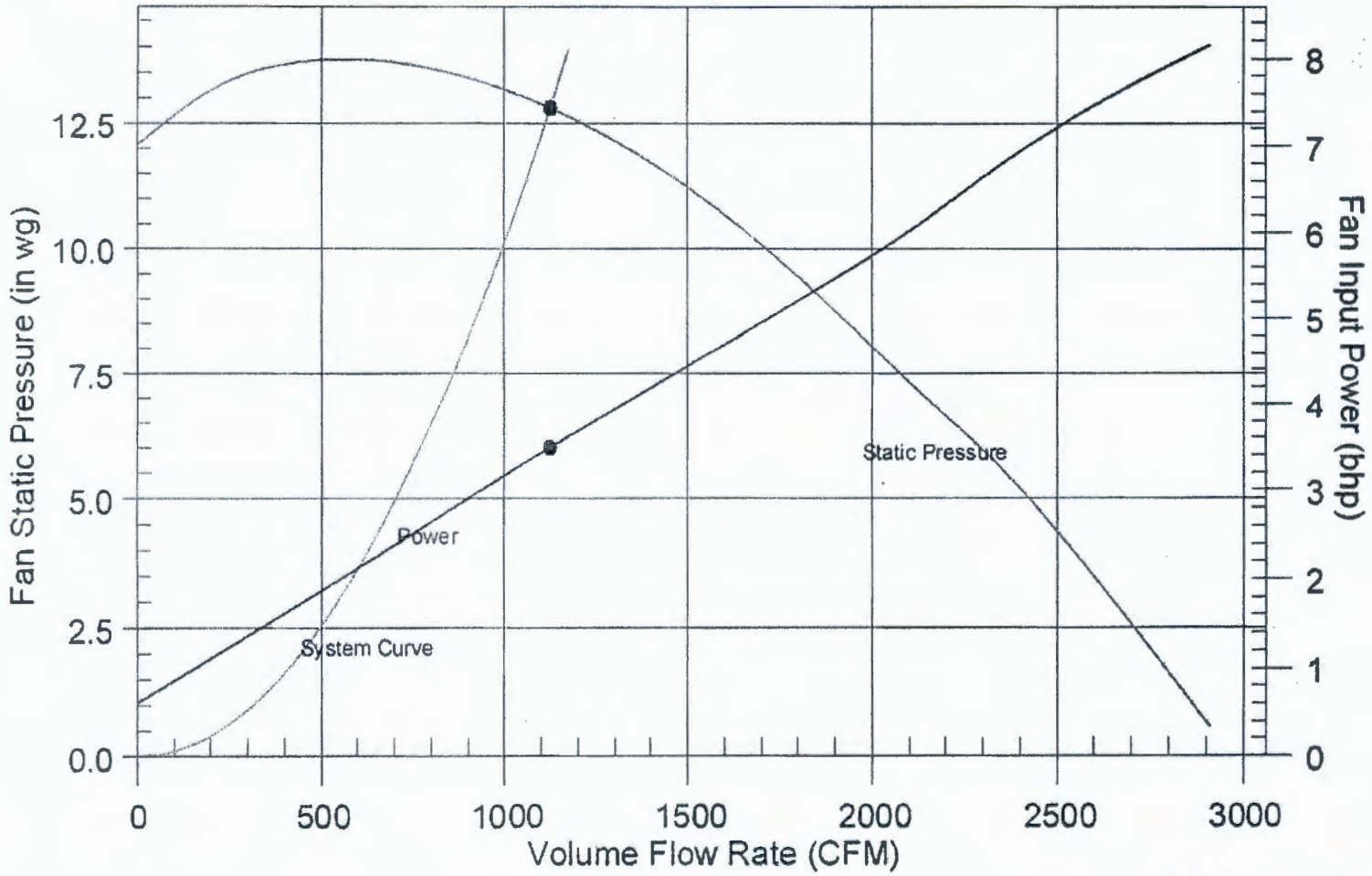

[v1.71.1000-R -- Feb, 2002] Date Printed: 1/19/2006
Copyright ©1999 The New York Blower Company.

Your Sales Representative:
Baxter Air Engineering
Phone: (425) 486-6666

Version: 1.71.1000-R (Feb, 2002)

Printed: 01/19/2006 PDF

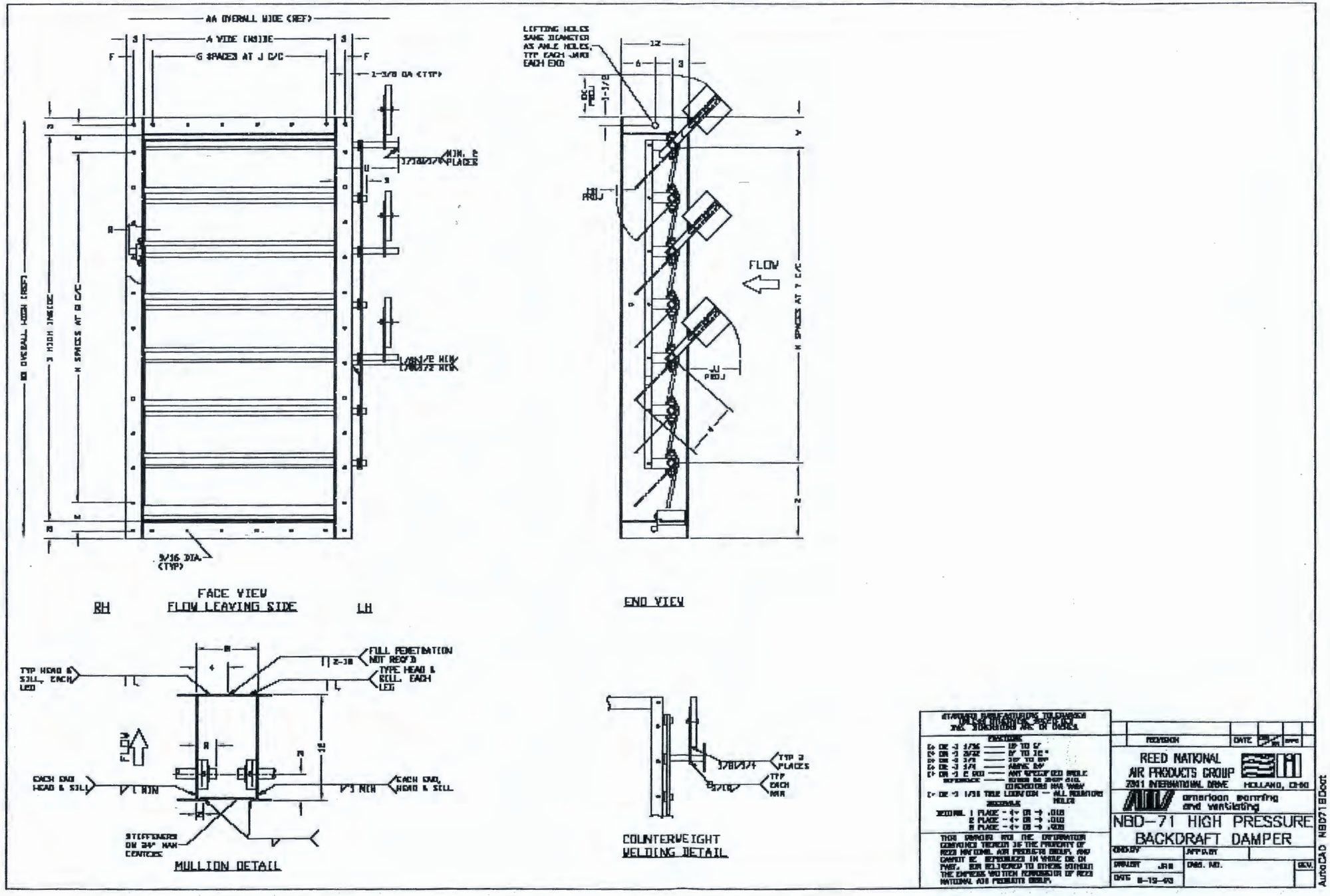
AA OVERALL WIDE (REF)
A WIDE INSIDE
G SPACES AT J C/C
1-3/8 DIA (TYP)
MIN. 6 PLACES
LIFTING HOLES SAME DIAMETER AS ANLE HOLES, TYP EACH JAMB EACH END
FLOW
9/16 DIA. (TYP)
FACE VIEW
RH
FLOW LEAVING SIDE
LH
END VIEW
FULL PENETRATION NOT REQ'D
TYPE HEAD & SILL, EACH LEG
TYP HEAD & SILL, EACH LEG
EACH END HEAD & SILL
EACH END, HEAD & SILL
STIFFENERS ON 24" MAX CENTERS
MULLION DETAIL
TYP 3 PLACES
TYP EACH MUL
COUNTERWEIGHT WELDING DETAIL
REED NATIONAL AIR PRODUCTS GROUP
7301 INTERNATIONAL DRIVE HOLLAND, OHIO
American Warning and Ventilating
NBD-71 HIGH PRESSURE BACKDRAFT DAMPER
AutoCAD NBD71BDoor

TYPICAL PRESSURE DROP AS FUNCTION OF FLOW VELOCITY FOR AWV MODEL NBD-71 TORNADO INTAKE DAMPER PER AMCA 500, FIGURE 5.3 FOR INDUCT MOUNTING.

REF.: SNUPPS 90154; 24" X 24" & 42" X 42" PROTOTYPES

NOTE: ACTUAL PRESSURE DROP MAY VARY DUE TO DAMPER CONSTRUCTION REQUIREMENTS.

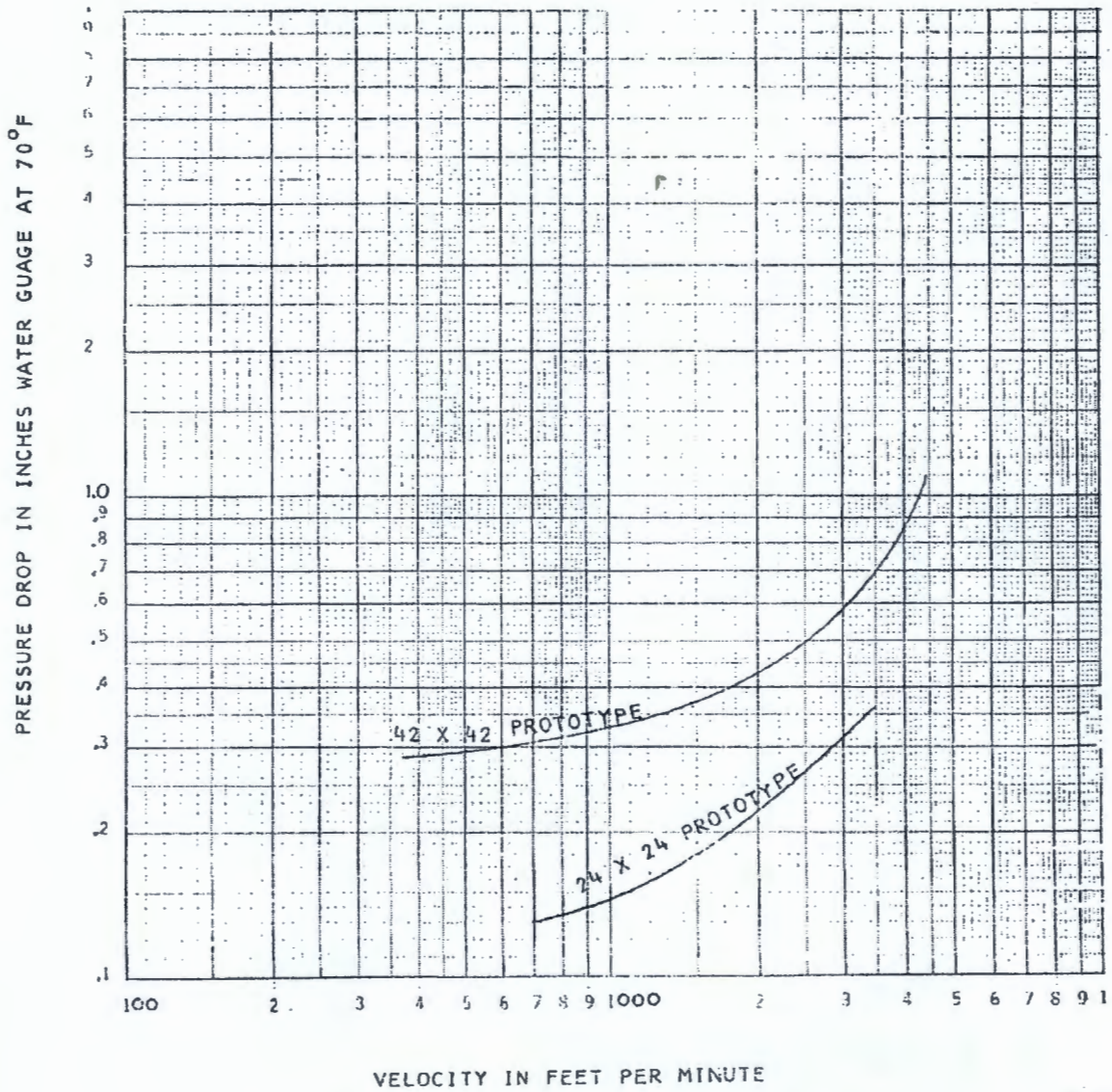

BCK 5/15/81

DMJM H&N | AECOM

Attachment 5

Calculation No. 145579-D-CA-056	**ORIGINATOR:** John Irwin 03-25-2006
Rev. No. : 1	**CHECKER:** Jack McConwell 3-26-06
Calculation Title : DBVS OGTS Bypass System Thermal Hydraulics Analysis	

ASHRAE Fundamentals Duct Fitting Loss Coefficients

This page intentionally left blank.

FITTING LOSS COEFFICIENTS

Fittings to support Examples 6 and 7 and some of the more common fittings are reprinted here.
For the complete fitting database see the *Duct Fitting Database* (ASHRAE 2002).

ROUND FITTINGS

CD3-1 Elbow, Die Stamped, 90 Degree, $r/D = 1.5$

D, in.	3	4	5	6	7	8	9	10
C_o	0.30	0.21	0.16	0.14	0.12	0.11	0.11	0.11

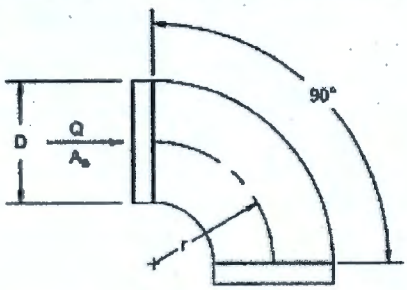

CD3-3 Elbow, Die Stamped, 45 Degree, $r/D = 1.5$

D, in.	3	4	5	6	7	8	9	10
C_o	0.18	0.13	0.10	0.08	0.07	0.07	0.07	0.07

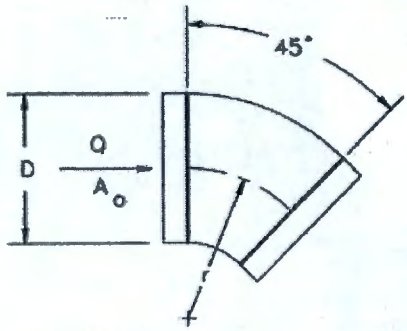

CD3-5 Elbow, Pleated, 90 Degree, $r/D = 1.5$

D, in.	4	6	8	10	12	14	16
C_o	0.57	0.43	0.34	0.28	0.26	0.25	0.25

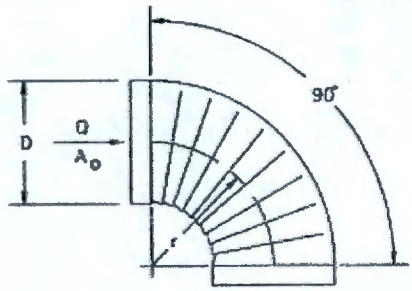

CD3-14 Elbow, 3 Gore, 45 Degree, $r/D = 1.5$

D, in.	3	6	9	12	15	18	21	24	27	30	60
C_o	0.31	0.17	0.13	0.11	0.11	0.09	0.08	0.08	0.07	0.07	0.07

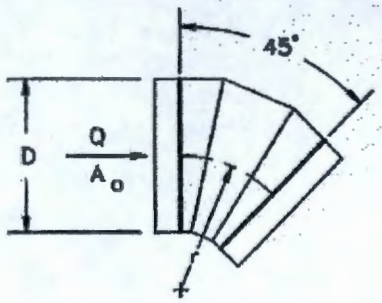

CD3-17 Elbow, Mitered, 45 Degree

D, in.	3	6	9	12	15	18	21	24	27	60
C_o	0.34	0.34	0.34	0.34	0.34	0.34	0.34	0.34	0.34	0.34

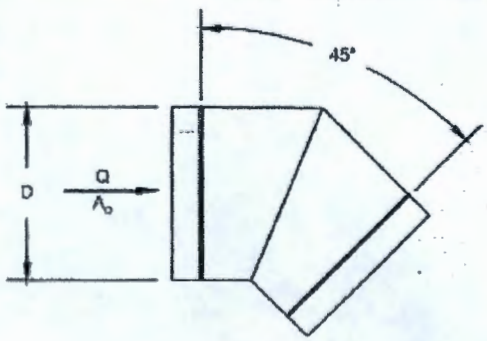

CD6-1 Screen (Only)

	C_o Values												
	σ												
A_1/A_o	0.30	0.35	0.40	0.45	0.50	0.55	0.60	0.65	0.70	0.75	0.80	0.90	1.00
0.2	155.00	102.50	75.00	55.00	41.25	31.50	24.25	18.75	14.50	11.00	8.00	3.50	0.00
0.3	68.89	45.56	33.33	24.44	18.33	14.00	10.78	8.33	6.44	4.89	3.56	1.56	0.00
0.4	38.75	25.63	18.75	13.75	10.31	7.88	6.06	4.69	3.63	2.75	2.00	0.88	0.00
0.5	24.80	16.40	12.00	8.80	6.60	5.04	3.88	3.00	2.32	1.76	1.28	0.56	0.00
0.6	17.22	11.39	8.33	6.11	4.58	3.50	2.69	2.08	1.61	1.22	0.89	0.39	0.00
0.7	12.65	8.37	6.12	4.49	3.37	2.57	1.98	1.53	1.18	0.90	0.65	0.29	0.00
0.8	9.69	6.40	4.69	3.44	2.58	1.97	1.52	1.17	0.91	0.69	0.50	0.22	0.00
0.9	7.65	5.06	3.70	2.72	2.04	1.56	1.20	0.93	0.72	0.54	0.40	0.17	0.00
1.0	6.20	4.10	3.00	2.20	1.65	1.26	0.97	0.75	0.58	0.44	0.32	0.14	0.00
1.2	4.31	2.85	2.08	1.53	1.15	0.88	0.67	0.52	0.40	0.31	0.22	0.10	0.00
1.4	3.16	2.09	1.53	1.12	0.84	0.64	0.49	0.38	0.30	0.22	0.16	0.07	0.00
1.6	2.42	1.60	1.17	0.86	0.64	0.49	0.38	0.29	0.23	0.17	0.13	0.05	0.00
1.8	1.91	1.27	0.93	0.68	0.51	0.39	0.30	0.23	0.18	0.14	0.10	0.04	0.00
2.0	1.55	1.03	0.75	0.55	0.41	0.32	0.24	0.19	0.15	0.11	0.08	0.04	0.00
2.5	0.99	0.66	0.48	0.35	0.26	0.20	0.16	0.12	0.09	0.07	0.05	0.02	0.00
3.0	0.69	0.46	0.33	0.24	0.18	0.14	0.11	0.08	0.06	0.05	0.04	0.02	0.00
4.0	0.39	0.26	0.19	0.14	0.10	0.08	0.06	0.05	0.04	0.03	0.02	0.01	0.00
6.0	0.17	0.11	0.08	0.06	0.05	0.04	0.03	0.02	0.02	0.01	0.01	0.00	0.00

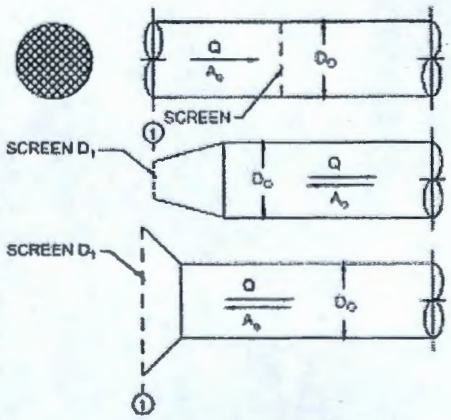

σ = free area ratio of screen
A_o = area of duct
A_1 = cross-sectional area of duct or fitting where screen is located

CD9-1 Damper, Butterfly

	C_v Values											
	θ											
D/D_o	0	10	20	30	40	50	60	70	75	80	85	90
0.5	0.19	0.27	0.37	0.49	0.61	0.74	0.86	0.96	0.99	1.02	1.04	1.04
0.6	0.19	0.32	0.48	0.69	0.94	1.21	1.48	1.72	1.82	1.89	1.93	2.00
0.7	0.19	0.37	0.64	1.01	1.51	2.12	2.81	3.46	3.73	3.94	4.08	6.00
0.8	0.19	0.45	0.87	1.55	2.60	4.13	6.14	8.38	9.40	10.30	10.80	15.00
0.9	0.19	0.54	1.22	2.51	4.97	9.57	17.80	30.50	38.00	45.00	50.10	100.00
1.0	0.19	0.67	1.76	4.38	11.20	32.00	113.00	619.00	2010.00	10350.00	99999.00	99999.00

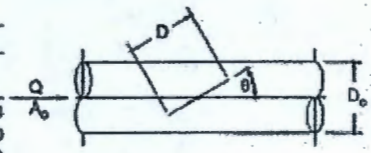

CD9-3 Fire Damper, Curtain Type, Type C

$C_v = 0.12$

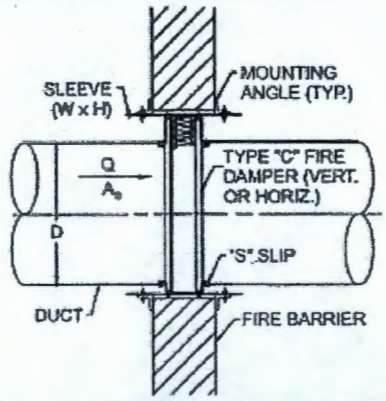

ED1-1 Duct Mounted in Wall

	C_v Values								
	L/D								
r/D	0.00	0.002	0.01	0.05	0.10	0.20	0.30	0.50	10.00
0.00	0.50	0.57	0.68	0.80	0.86	0.92	0.97	1.00	1.00
0.02	0.50	0.51	0.52	0.55	0.60	0.66	0.69	0.72	0.72
0.05	0.50	0.50	0.50	0.50	0.50	0.50	0.50	0.50	0.50
10.00	0.50	0.50	0.50	0.50	0.50	0.50	0.50	0.50	0.50

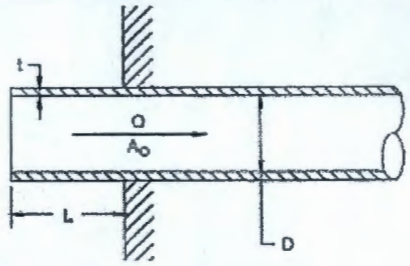

ED1-3 Bellmouth, with Wall

r/D	0.00	0.01	0.02	0.03	0.04	0.05	0.06	0.08	0.10	0.12	0.16	0.20	10.00
C_v	0.50	0.44	0.37	0.31	0.26	0.22	0.20	0.15	0.12	0.09	0.06	0.03	0.03

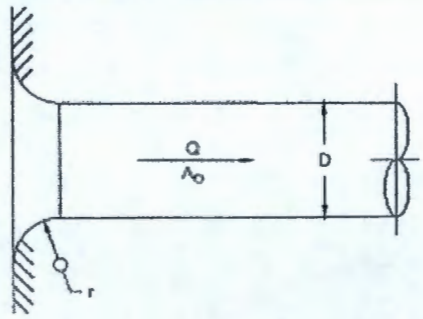

ED2-1 Conical Diffuser, Round to Plenum, Exhaust/Return Systems

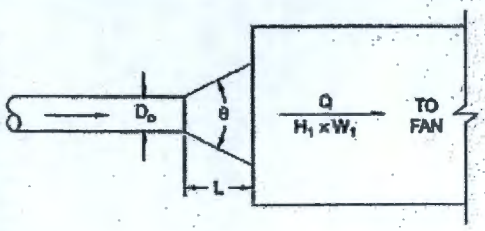

	C_e Values										
	L/D_o										
A_1/A_o	0.5	1.0	2.0	3.0	4.0	5.0	6.0	8.0	10.0	12.0	14.0
1.5	0.03	0.02	0.03	0.03	0.04	0.05	0.06	0.08	0.10	0.11	0.13
2.0	0.08	0.06	0.04	0.04	0.04	0.05	0.05	0.06	0.08	0.09	0.10
2.5	0.13	0.09	0.06	0.06	0.06	0.06	0.06	0.06	0.07	0.08	0.09
3.0	0.17	0.12	0.09	0.07	0.07	0.06	0.06	0.07	0.07	0.08	0.08
4.0	0.23	0.17	0.12	0.10	0.09	0.08	0.08	0.08	0.08	0.08	0.08
6.0	0.30	0.22	0.16	0.13	0.12	0.10	0.10	0.09	0.09	0.09	0.08
8.0	0.34	0.26	0.18	0.15	0.13	0.12	0.11	0.10	0.09	0.09	0.09
10.0	0.36	0.28	0.20	0.16	0.14	0.13	0.12	0.11	0.10	0.09	0.09
14.0	0.39	0.30	0.22	0.18	0.16	0.14	0.13	0.12	0.10	0.10	0.10
20.0	0.41	0.32	0.24	0.20	0.17	0.15	0.14	0.12	0.11	0.11	0.10

	Optimum Angle θ										
A_1/A_o	0.5	1.0	2.0	3.0	4.0	5.0	6.0	8.0	10.0	12.0	14.0
1.5	34	20	13	9	7	6	4	3	2	2	2
2.0	42	28	17	12	10	9	8	6	5	4	3
2.5	50	32	20	15	12	11	10	8	7	6	5
3.0	54	34	22	17	14	12	11	10	8	8	6
4.0	58	40	26	20	16	14	13	12	10	10	9
6.0	62	42	28	22	19	16	15	12	11	10	9
8.0	64	44	30	24	20	18	16	13	12	11	10
10.0	66	46	30	24	22	19	17	14	12	11	10
14.0	66	48	32	26	22	19	17	14	13	11	11
20.0	68	48	32	26	22	20	18	15	13	12	11

ED4-1 Transition, Round to Round, Exhaust/Return Systems

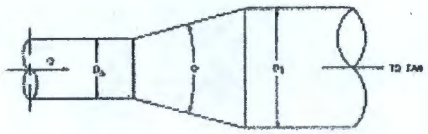

	C_e Values									
	θ									
A_o/A_1	10	15	20	30	45	60	90	120	150	180
0.06	0.21	0.29	0.38	0.60	0.84	0.88	0.88	0.88	0.88	0.88
0.10	0.21	0.28	0.38	0.59	0.76	0.80	0.83	0.84	0.83	0.83
0.25	0.16	0.22	0.30	0.46	0.61	0.68	0.64	0.63	0.62	0.62
0.50	0.11	0.13	0.19	0.32	0.33	0.33	0.32	0.31	0.30	0.30
1.00	0.00	0.00	0.00	0.00	0.00	0.00	0.00	0.00	0.00	0.00
2.00	0.20	0.20	0.20	0.20	0.22	0.24	0.48	0.72	0.96	1.04
4.00	0.80	0.64	0.64	0.64	0.88	1.12	2.72	4.32	5.60	6.56
6.00	1.80	1.44	1.44	1.44	1.98	2.52	6.48	10.10	13.00	15.10
10.00	5.00	5.00	5.00	5.00	6.50	8.00	19.00	29.00	37.00	43.00

ED4-2 Transition, Round to Rectangular, Exhaust/Return Systems

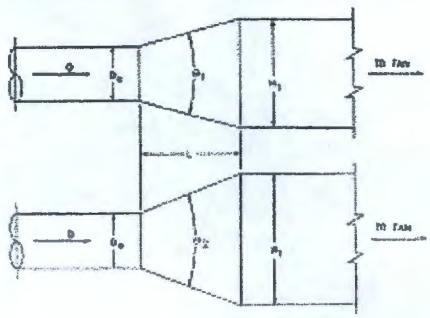

	C_e Values									
	θ									
A_o/A_1	10	15	20	30	45	60	90	120	150	180
0.06	0.30	0.54	0.53	0.65	0.77	0.88	0.95	0.98	0.98	0.93
0.10	0.30	0.50	0.53	0.64	0.75	0.84	0.89	0.91	0.91	0.88
0.25	0.25	0.36	0.45	0.52	0.58	0.62	0.64	0.64	0.64	0.64
0.50	0.15	0.21	0.25	0.30	0.33	0.33	0.33	0.32	0.31	0.30
1.00	0.00	0.00	0.00	0.00	0.00	0.00	0.00	0.00	0.00	0.00
2.00	0.24	0.28	0.26	0.20	0.22	0.24	0.49	0.73	0.97	1.04
4.00	0.89	0.78	0.79	0.70	0.88	1.12	2.72	4.30	5.62	6.58
6.00	1.89	1.67	1.59	1.49	1.98	2.52	6.51	10.14	13.05	15.14
10.00	5.09	5.32	5.15	5.05	6.50	8.05	19.06	29.07	37.08	43.05

RD5-1 Wye, 30 Degree, Converging

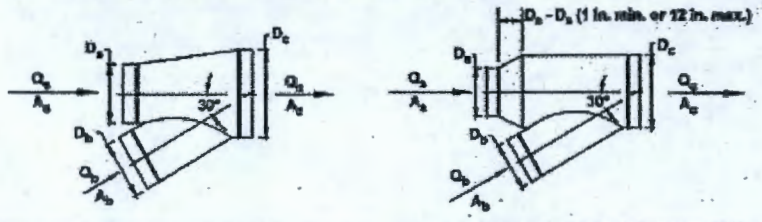

		C_b Values								
		Q_b/Q_c								
A_a/A_c	A_b/A_c	0.1	0.2	0.3	0.4	0.5	0.6	0.7	0.8	0.9
0.2	0.2	−24.17	−3.78	−0.60	0.30	0.64	0.77	0.83	0.88	0.98
	0.3	−55.88	−9.77	−2.57	−0.50	0.25	0.55	0.67	0.70	0.71
	0.4	−99.93	−17.94	−5.13	−1.45	−0.11	0.42	0.62	0.68	0.68
	0.5	−156.51	−28.40	−8.37	−2.62	−0.52	0.30	0.62	0.71	0.69
	0.6	−225.62	−41.13	−12.30	−4.01	−0.99	0.20	0.66	0.78	0.75
	0.7	−307.26	−56.14	−16.90	−5.61	−1.51	0.11	0.73	0.90	0.86
	0.8	−401.44	−73.44	−22.18	−7.44	−2.08	0.04	0.84	1.06	1.01
	0.9	−508.15	−93.02	−28.15	−9.49	−2.71	−0.03	0.99	1.27	1.20
	1.0	−627.39	−114.89	−34.80	−11.77	−3.39	−0.08	1.18	1.52	1.43
0.3	0.2	−13.97	−1.77	0.08	0.59	0.77	0.84	0.88	0.92	1.06
	0.3	−33.06	−5.33	−1.09	0.10	0.51	0.66	0.71	0.72	0.74
	0.4	−59.43	−10.08	−2.52	−0.41	0.32	0.59	0.67	0.68	0.66
	0.5	−93.24	−16.11	−4.30	−1.00	0.14	0.56	0.69	0.70	0.66
	0.6	−134.51	−23.45	−6.44	−1.68	−0.03	0.57	0.76	0.77	0.70
	0.7	−183.25	−32.08	−8.93	−2.45	−0.21	0.61	0.87	0.88	0.79
	0.8	−239.47	−42.01	−11.77	−3.32	−0.38	0.69	1.02	1.03	0.91
	0.9	−303.16	−53.25	−14.97	−4.27	−0.56	0.80	1.21	1.23	1.07
	1.0	−374.32	−65.79	−18.53	−5.32	−0.73	0.94	1.45	1.47	1.27
0.4	0.2	−9.20	−0.85	0.39	0.71	0.82	0.87	0.90	0.94	1.09
	0.3	−22.31	−3.24	−0.38	0.39	0.64	0.73	0.76	0.78	0.85
	0.4	−40.52	−6.48	−1.37	0.02	0.48	0.64	0.67	0.66	0.65
	0.5	−63.71	−10.50	−2.50	−0.33	0.40	0.63	0.69	0.67	0.63
	0.6	−92.00	−15.37	−3.84	−0.71	0.33	0.67	0.75	0.71	0.65
	0.7	−125.40	−21.08	−5.40	−1.13	0.28	0.75	0.85	0.80	0.70
	0.8	−163.90	−27.65	−7.16	−1.59	0.25	0.86	1.00	0.93	0.80
	0.9	−207.52	−35.07	−9.14	−2.09	0.25	1.02	1.18	1.10	0.93
	1.0	−256.25	−43.35	−11.33	−2.63	0.26	1.21	1.42	1.31	1.09
0.5	0.2	−6.62	−0.36	0.54	0.77	0.85	0.88	0.90	0.95	1.11
	0.3	−16.42	−2.11	−0.01	0.54	0.72	0.78	0.80	0.83	0.96
	0.4	−30.26	−4.59	−0.79	0.22	0.54	0.64	0.66	0.64	0.64
	0.5	−47.68	−7.55	−1.61	−0.02	0.48	0.63	0.65	0.62	0.59
	0.6	−68.93	−11.13	−2.56	−0.28	0.45	0.67	0.69	0.65	0.58
	0.7	−94.00	−15.31	−3.65	−0.55	0.44	0.74	0.77	0.71	0.61
	0.8	−122.90	−20.12	−4.88	−0.83	0.46	0.85	0.90	0.81	0.68
	0.9	−155.63	−25.54	−6.25	−1.12	0.51	1.00	1.06	0.94	0.77
	1.0	−192.18	−31.58	−7.77	−1.43	0.59	1.19	1.26	1.12	0.90
0.6	0.2	−5.12	−0.10	0.62	0.79	0.85	0.87	0.90	0.95	1.11
	0.3	−13.00	−1.49	0.18	0.61	0.75	0.79	0.82	0.86	1.02
	0.4	−24.31	−3.55	−0.50	0.30	0.55	0.62	0.63	0.62	0.63
	0.5	−38.41	−5.94	−1.16	0.09	0.48	0.59	0.60	0.57	0.55
	0.6	−55.58	−8.80	−1.92	−0.12	0.45	0.61	0.62	0.57	0.52
	0.7	−75.83	−12.16	−2.79	−0.33	0.44	0.66	0.67	0.60	0.52
	0.8	−99.17	−16.00	−3.76	−0.54	0.46	0.74	0.76	0.67	0.56
	0.9	−125.60	−20.33	−4.83	−0.76	0.51	0.86	0.88	0.77	0.62
	1.0	−155.12	−25.14	−6.02	−0.99	0.58	1.02	1.04	0.90	0.71
0.7	0.2	−4.24	0.05	0.65	0.80	0.85	0.87	0.89	0.94	1.12
	0.3	−11.00	−1.15	0.27	0.63	0.75	0.79	0.82	0.87	1.06
	0.4	−20.82	−3.00	−0.38	0.31	0.52	0.59	0.60	0.59	0.61
	0.5	−32.99	−5.09	−0.98	0.10	0.43	0.53	0.54	0.52	0.51
	0.6	−47.78	−7.58	−1.67	−0.11	0.38	0.52	0.53	0.49	0.45
	0.7	−65.22	−10.50	−2.44	−0.32	0.34	0.53	0.54	0.49	0.43
	0.8	−85.32	−13.83	−3.30	−0.53	0.33	0.58	0.59	0.52	0.43
	0.9	−108.07	−17.58	−4.26	−0.75	0.34	0.66	0.67	0.58	0.46
	1.0	−133.48	−21.76	−5.38	−0.97	0.38	0.76	0.78	0.67	0.51

ED5-1 Wye, 30 Degree, Converging (*Continued*)

		C_b Values (*Concluded*)								
		Q_b/Q_c								
A_p/A_c	A_b/A_c	0.1	0.2	0.3	0.4	0.5	0.6	0.7	0.8	0.9
0.8	0.2	−3.75	0.11	0.65	0.79	0.84	0.86	0.88	0.94	1.12
	0.3	−9.88	−0.99	0.29	0.63	0.74	0.78	0.81	0.87	1.09
	0.4	−18.88	−2.75	−0.36	0.28	0.48	0.55	0.56	0.57	0.61
	0.5	−29.98	−4.71	−0.96	0.04	0.36	0.46	0.47	0.46	0.47
	0.6	−43.46	−7.05	−1.64	−0.20	0.26	0.41	0.43	0.41	0.39
	0.7	−59.34	−9.77	−2.40	−0.44	0.19	0.38	0.41	0.38	0.34
	0.8	−77.64	−12.88	−3.26	−0.69	0.13	0.38	0.42	0.37	0.31
	0.9	−98.35	−16.38	−4.20	−0.95	0.09	0.40	0.45	0.39	0.30
	1.0	−121.48	−20.27	−5.24	−1.23	0.06	0.45	0.51	0.43	0.31
0.9	0.2	−3.52	0.12	0.64	0.78	0.82	0.85	0.88	0.93	1.12
	0.3	−9.34	−0.95	0.28	0.60	0.71	0.76	0.80	0.87	1.10
	0.4	−17.96	−2.70	−0.40	0.22	0.43	0.50	0.53	0.54	0.60
	0.5	−28.58	−4.65	−1.05	−0.07	0.26	0.37	0.40	0.41	0.42
	0.6	−41.45	−6.97	−1.77	−0.35	0.12	0.28	0.32	0.32	0.32
	0.7	−56.61	−9.66	−2.58	−0.65	0.00	0.21	0.27	0.26	0.24
	0.8	−74.08	−12.74	−3.49	−0.97	−0.12	0.16	0.23	0.22	0.18
	0.9	−93.84	−16.21	−4.50	−1.30	−0.23	0.13	0.21	0.19	0.14
	1.0	−115.92	−20.06	−5.61	−1.66	−0.34	0.11	0.21	0.18	0.11
1.0	0.2	−3.48	0.10	0.62	0.76	0.81	0.84	0.87	0.92	1.11
	0.3	−9.22	−1.00	0.23	0.56	0.68	0.74	0.78	0.86	1.11
	0.4	−17.76	−2.79	−0.50	0.14	0.37	0.45	0.49	0.52	0.60
	0.5	−28.31	−4.82	−1.21	−0.20	0.15	0.28	0.33	0.35	0.38
	0.6	−41.06	−7.21	−2.01	−0.55	−0.04	0.15	0.22	0.23	0.25
	0.7	−56.09	−9.99	−2.91	−0.92	−0.23	0.03	0.12	0.14	0.15
	0.8	−73.39	−13.17	−3.92	−1.32	−0.41	−0.07	0.04	0.06	0.06
	0.9	−92.98	−16.75	−5.04	−1.75	−0.60	−0.17	−0.03	−0.01	−0.02
	1.0	−114.85	−20.74	−6.28	−2.21	−0.79	−0.26	−0.09	−0.07	−0.09

		C_s Values								
		Q_s/Q_c								
A_p/A_c	A_b/A_c	0.1	0.2	0.3	0.4	0.5	0.6	0.7	0.8	0.9
0.2	0.2	−16.02	−3.15	−0.80	0.04	0.45	0.69	0.86	0.99	1.10
	0.3	−11.65	−1.94	−0.26	0.32	0.60	0.77	0.90	1.01	1.10
	0.4	−8.56	−1.20	0.05	0.47	0.68	0.82	0.92	1.02	1.11
	0.5	−6.41	−0.71	0.25	0.57	0.73	0.84	0.93	1.02	1.11
	0.6	−4.85	−0.36	0.38	0.63	0.76	0.86	0.94	1.02	1.11
	0.7	−3.68	−0.10	0.48	0.68	0.79	0.87	0.95	1.03	1.11
	0.8	−2.77	0.10	0.56	0.71	0.81	0.88	0.95	1.03	1.11
	0.9	−2.04	0.26	0.62	0.74	0.82	0.89	0.95	1.03	1.11
	1.0	−1.45	0.38	0.66	0.76	0.83	0.89	0.96	1.03	1.11
0.3	0.2	−36.37	−7.59	−2.48	−0.79	−0.06	0.29	0.47	0.57	0.61
	0.3	−26.79	−5.07	−1.42	−0.27	0.21	0.42	0.53	0.59	0.61
	0.4	−19.94	−3.49	−0.80	0.02	0.35	0.49	0.56	0.60	0.62
	0.5	−15.18	−2.44	−0.41	0.20	0.43	0.54	0.58	0.61	0.62
	0.6	−11.73	−1.70	−0.13	0.32	0.49	0.56	0.60	0.61	0.62
	0.7	−9.13	−1.14	0.07	0.41	0.53	0.58	0.60	0.61	0.62
	0.8	−7.11	−0.72	0.23	0.48	0.57	0.60	0.61	0.62	0.62
	0.9	−5.49	−0.38	0.35	0.53	0.59	0.61	0.62	0.62	0.62
	1.0	−4.17	−0.11	0.45	0.58	0.61	0.62	0.62	0.62	0.62
0.4	0.2	−64.82	−13.76	−4.74	−1.81	−0.59	−0.02	0.24	0.36	0.39
	0.3	−47.92	−9.38	−2.95	−0.94	−0.16	0.19	0.34	0.39	0.40
	0.4	−35.81	−6.62	−1.88	−0.46	0.07	0.30	0.38	0.41	0.40
	0.5	−27.39	−4.78	−1.20	−0.16	0.22	0.36	0.41	0.42	0.41
	0.6	−21.28	−3.48	−0.73	0.04	0.31	0.41	0.43	0.43	0.41
	0.7	−16.68	−2.51	−0.38	0.20	0.38	0.44	0.45	0.43	0.41
	0.8	−13.10	−1.77	−0.12	0.31	0.44	0.46	0.46	0.44	0.41
	0.9	−10.24	−1.18	0.09	0.40	0.48	0.48	0.46	0.44	0.41
	1.0	−7.90	−0.69	0.26	0.47	0.51	0.50	0.47	0.44	0.41

ED5-1 Wye, 30 Degree, Converging (*Concluded*)

		C_s Values (*Concluded*)								
		Q_s/Q_c								
A_s/A_c	A_b/A_c	0.1	0.2	0.3	0.4	0.5	0.6	0.7	0.8	0.9
0.5	0.2	−101.39	−21.64	−7.61	−3.07	−1.19	−0.34	0.05	0.22	0.26
	0.3	−75.05	−14.87	−4.83	−1.75	−0.54	−0.03	0.19	0.26	0.27
	0.4	−56.18	−10.59	−3.21	−1.02	−0.20	0.13	0.26	0.29	0.27
	0.5	−43.04	−7.74	−2.16	−0.56	0.02	0.23	0.30	0.30	0.27
	0.6	−33.51	−5.72	−1.43	−0.24	0.16	0.30	0.33	0.31	0.28
	0.7	−26.34	−4.22	−0.90	−0.01	0.27	0.35	0.35	0.32	0.28
	0.8	−20.75	−3.06	−0.49	0.16	0.35	0.39	0.37	0.33	0.28
	0.9	−16.29	−2.14	−0.17	0.30	0.41	0.41	0.38	0.33	0.28
	1.0	−12.64	−1.39	0.10	0.41	0.46	0.44	0.39	0.33	0.28
0.6	0.2	−146.06	−31.26	−11.09	−4.56	−1.89	−0.68	−0.12	0.10	0.16
	0.3	−108.19	−21.55	−7.12	−2.69	−0.97	−0.24	0.07	0.17	0.17
	0.4	−81.04	−15.40	−4.80	−1.65	−0.48	−0.01	0.17	0.20	0.18
	0.5	−62.13	−11.31	−3.30	−0.99	−0.17	0.13	0.22	0.22	0.18
	0.6	−48.43	−8.41	−2.25	−0.54	0.03	0.22	0.26	0.24	0.18
	0.7	−38.10	−6.25	−1.49	−0.22	0.18	0.29	0.29	0.25	0.19
	0.8	−30.07	−4.59	−0.90	0.03	0.30	0.34	0.31	0.25	0.19
	0.9	−23.64	−3.27	−0.44	0.23	0.39	0.38	0.33	0.26	0.19
	1.0	−18.39	−2.20	−0.06	0.39	0.46	0.42	0.34	0.27	0.19
0.7	0.2	−198.85	−42.62	−15.17	−6.31	−2.68	−1.04	−0.29	0.01	0.08
	0.3	−147.33	−29.41	−9.78	−3.77	−1.44	−0.45	−0.04	0.10	0.10
	0.4	−110.40	−21.07	−6.64	−2.36	−0.77	−0.14	0.09	0.15	0.11
	0.5	−84.67	−15.50	−4.60	−1.48	−0.36	0.05	0.17	0.17	0.11
	0.6	−66.02	−11.56	−3.19	−0.86	−0.08	0.18	0.23	0.19	0.12
	0.7	−51.97	−8.63	−2.15	−0.42	0.12	0.27	0.27	0.20	0.12
	0.8	−41.04	−6.37	−1.35	−0.08	0.27	0.34	0.29	0.21	0.12
	0.9	−32.30	−4.58	−0.72	0.19	0.39	0.39	0.32	0.22	0.12
	1.0	−25.16	−3.12	−0.21	0.40	0.49	0.43	0.33	0.23	0.13
0.8	0.2	−259.75	−55.70	−19.86	−8.29	−3.56	−1.43	−0.46	−0.06	0.03
	0.3	−192.48	−38.47	−12.84	−4.99	−1.95	−0.66	−0.12	0.05	0.05
	0.4	−144.25	−27.58	−8.74	−3.16	−1.09	−0.26	0.05	0.11	0.06
	0.5	−110.65	−20.32	−6.08	−2.00	−0.55	−0.01	0.15	0.15	0.07
	0.6	−86.30	−15.17	−4.24	−1.20	−0.19	0.15	0.22	0.17	0.08
	0.7	−67.95	−11.34	−2.88	−0.62	0.08	0.27	0.27	0.19	0.08
	0.8	−53.67	−8.40	−1.84	−0.18	0.28	0.36	0.30	0.20	0.08
	0.9	−42.26	−6.05	−1.02	0.16	0.44	0.43	0.33	0.21	0.08
	1.0	−32.93	−4.15	−0.35	0.44	0.56	0.49	0.36	0.22	0.09
0.9	0.2	−328.76	−70.51	−25.16	−10.53	−4.54	−1.84	−0.62	−0.12	0.00
	0.3	−243.63	−48.72	−16.28	−6.35	−2.50	−0.87	−0.20	0.03	0.03
	0.4	−182.60	−34.94	−11.09	−4.03	−1.41	−0.37	0.02	0.10	0.04
	0.5	−140.07	−25.75	−7.74	−2.57	−0.74	−0.06	0.15	0.14	0.05
	0.6	−109.25	−19.24	−5.40	−1.56	−0.28	0.15	0.23	0.17	0.05
	0.7	−86.04	−14.40	−3.68	−0.83	0.06	0.30	0.30	0.20	0.06
	0.8	−67.96	−10.66	−2.37	−0.27	0.31	0.41	0.34	0.21	0.06
	0.9	−53.52	−7.70	−1.33	0.17	0.51	0.50	0.38	0.22	0.06
	1.0	−41.71	−5.29	−0.49	0.52	0.67	0.57	0.41	0.23	0.07
1.0	0.2	−405.88	−87.06	−31.07	−13.01	−5.62	−2.29	−0.77	−0.16	−0.02
	0.3	−300.78	−60.15	−20.11	−7.85	−3.10	−1.09	−0.26	0.02	0.02
	0.4	−225.44	−43.14	−13.70	−4.99	−1.76	−0.47	0.01	0.11	0.04
	0.5	−172.93	−31.80	−9.56	−3.18	−0.92	−0.09	0.17	0.17	0.05
	0.6	−134.89	−23.76	−6.68	−1.94	−0.35	0.17	0.28	0.20	0.06
	0.7	−106.23	−17.78	−4.56	−1.04	0.06	0.36	0.35	0.23	0.06
	0.8	−83.92	−13.18	−2.93	−0.35	0.37	0.50	0.41	0.25	0.06
	0.9	−66.08	−9.52	−1.65	0.19	0.62	0.61	0.46	0.26	0.07
	1.0	−51.51	−6.54	−0.61	0.63	0.81	0.70	0.49	0.26	0.07

ED5-2 Wye, 45 Degree, Converging

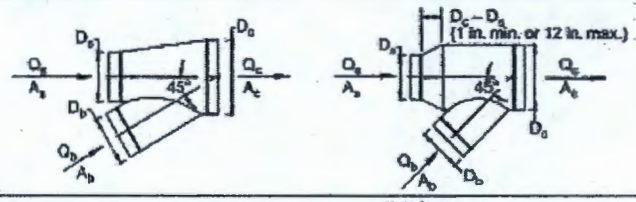

		C_s Values								
		Q_s/Q_c								
A_s/A_c	A_b/A_c	0.1	0.2	0.3	0.4	0.5	0.6	0.7	0.8	0.9
0.2	0.2	−25.19	−3.97	−0.64	0.32	0.67	0.82	0.90	0.96	1.08
	0.3	−58.03	−10.14	−2.63	−0.45	0.36	0.69	0.84	0.93	1.08
	0.4	−104.08	−18.80	−5.40	−1.51	−0.07	0.52	0.77	0.88	1.01
	0.5	−163.36	−29.97	−8.97	−2.87	−0.62	0.29	0.67	0.80	0.84
	0.6	−235.59	−43.47	−13.22	−4.44	−1.20	0.12	0.65	0.83	0.85
	0.7	−320.90	−59.38	−18.21	−6.25	−1.84	−0.04	0.68	0.91	0.93
	0.8	−419.32	−77.73	−23.95	−8.33	−2.56	−0.22	0.72	1.02	1.02
	0.9	−530.86	−98.50	−30.44	−10.66	−3.36	−0.40	0.79	1.16	1.14
	1.0	−655.51	−121.72	−37.68	−13.26	−4.25	−0.59	0.87	1.33	1.28
0.3	0.2	−14.27	−1.77	0.13	0.66	0.85	0.93	0.97	1.03	1.21
	0.3	−33.62	−5.28	−0.95	0.27	0.70	0.87	0.94	1.01	1.19
	0.4	−60.85	−10.26	−2.48	−0.30	0.47	0.77	0.88	0.93	1.04
	0.5	−95.87	−16.64	−4.44	−1.00	0.21	0.66	0.82	0.84	0.84
	0.6	−138.38	−24.26	−6.68	−1.73	0.01	0.66	0.88	0.91	0.88
	0.7	−188.60	−33.25	−9.32	−2.58	−0.20	0.68	0.98	1.02	0.95
	0.8	−246.54	−43.60	−12.34	−3.54	−0.43	0.72	1.11	1.15	1.03
	0.9	−312.21	−55.33	−15.76	−4.61	−0.68	0.78	1.26	1.31	1.13
	1.0	−385.59	−68.43	−19.56	−5.79	−0.94	0.86	1.45	1.49	1.24
0.4	0.2	−8.77	−0.64	0.54	0.85	0.95	0.99	1.03	1.09	1.31
	0.3	−21.41	−2.85	−0.10	0.63	0.87	0.96	1.00	1.06	1.26
	0.4	−39.30	−6.02	−1.05	0.28	0.72	0.87	0.91	0.92	1.00
	0.5	−62.10	−9.96	−2.16	−0.06	0.63	0.85	0.90	0.88	0.86
	0.6	−89.77	−14.65	−3.42	−0.38	0.61	0.93	0.99	0.95	0.90
	0.7	−122.46	−20.19	−4.88	−0.74	0.61	1.04	1.12	1.06	0.95
	0.8	−160.18	−26.56	−6.55	−1.15	0.62	1.18	1.29	1.19	1.01
	0.9	−202.93	−33.77	−8.44	−1.60	0.64	1.36	1.48	1.35	1.07
	1.0	−250.70	−41.83	−10.54	−2.09	0.68	1.56	1.71	1.53	1.15
0.5	0.2	−5.45	0.04	0.79	0.97	1.02	1.04	1.07	1.14	1.39
	0.3	−14.10	−1.39	0.40	0.84	0.97	1.00	1.02	1.07	1.28
	0.4	−26.48	−3.53	−0.24	0.59	0.83	0.89	0.88	0.85	0.86
	0.5	−41.84	−5.96	−0.80	0.51	0.88	0.97	0.95	0.90	0.87
	0.6	−60.61	−8.90	−1.46	0.43	0.97	1.09	1.06	0.97	0.90
	0.7	−82.80	−12.36	−2.22	0.35	1.09	1.25	1.20	1.08	0.93
	0.8	−108.39	−16.35	−3.09	0.27	1.24	1.45	1.38	1.20	0.96
	0.9	−137.41	−20.86	−4.07	0.19	1.42	1.68	1.59	1.35	0.99
	1.0	−169.84	−25.90	−5.15	0.11	1.63	1.95	1.83	1.52	1.02
0.6	0.2	−3.54	−0.08	0.70	0.91	0.98	1.01	1.05	1.14	1.42
	0.3	−14.48	−1.75	0.13	0.64	0.81	0.88	0.92	0.98	1.19
	0.4	−27.10	−4.14	−0.68	0.26	0.57	0.68	0.71	0.72	0.76
	0.5	−42.84	−6.91	−1.50	−0.02	0.47	0.64	0.68	0.69	0.70
	0.6	−62.07	−10.28	−2.48	−0.34	0.37	0.61	0.67	0.66	0.63
	0.7	−84.79	−14.26	−3.62	−0.71	0.27	0.59	0.67	0.63	0.54
	0.8	−111.02	−18.84	−4.92	−1.12	0.16	0.58	0.67	0.61	0.44
	0.9	−140.76	−24.03	−6.40	−1.57	0.04	0.58	0.68	0.59	0.31
	1.0	−174.01	−29.83	−8.04	−2.07	−0.08	0.58	0.70	0.56	0.15
0.7	0.2	−3.96	0.25	0.83	0.97	1.01	1.04	1.08	1.17	1.47
	0.3	−11.07	−1.10	0.34	0.71	0.83	0.87	0.90	0.95	1.13
	0.4	−20.92	−2.92	−0.27	0.43	0.65	0.72	0.73	0.75	0.77
	0.5	−33.20	−5.01	−0.85	0.24	0.59	0.69	0.71	0.69	0.70
	0.6	−48.21	−7.55	−1.55	0.01	0.53	0.68	0.69	0.65	0.61
	0.7	−65.95	−10.56	−2.37	−0.20	0.48	0.68	0.69	0.62	0.49
	0.8	86.42	−14.01	−3.30	−0.46	0.43	0.68	0.69	0.58	0.35
	0.9	−109.65	−17.93	−4.35	−0.75	0.38	0.70	0.70	0.53	0.18
	1.0	−135.63	−22.32	−5.53	−1.07	0.33	0.72	0.71	0.48	−0.03

EDS-2 Wye, 45 Degree, Converging (*Continued*)

		C_b Values (*Concluded*)								
		Q_b/Q_c								
A_s/A_c	A_b/A_c	0.1	0.2	0.3	0.4	0.5	0.6	0.7	0.8	0.9
0.8	0.2	−2.78	0.50	0.91	1.01	1.03	1.05	1.09	1.18	1.49
	0.3	−8.58	−0.65	0.47	0.74	0.82	0.85	0.86	0.89	1.02
	0.4	−16.29	−2.00	0.05	0.56	0.71	0.75	0.74	0.74	0.78
	0.5	−25.98	−3.59	−0.37	0.44	0.68	0.73	0.72	0.69	0.69
	0.6	−37.82	−5.52	−0.87	0.31	0.65	0.72	0.70	0.64	0.58
	0.7	−51.83	−7.79	−1.44	0.17	0.63	0.73	0.69	0.59	0.43
	0.8	−68.01	−10.42	−2.10	0.01	0.62	0.75	0.69	0.53	0.25
	0.9	−86.37	−13.39	−2.84	−0.16	0.61	0.77	0.68	0.47	0.03
	1.0	−106.91	−16.73	−3.68	−0.35	0.61	0.79	0.68	0.38	−0.25
0.9	0.2	−1.87	0.68	0.98	1.03	1.05	1.06	1.09	1.18	1.49
	0.3	−6.70	−0.33	0.54	0.74	0.79	0.80	0.80	0.81	0.87
	0.4	−12.69	−1.29	0.29	0.66	0.76	0.77	0.75	0.74	0.78
	0.5	−20.37	−2.48	0.00	0.59	0.74	0.75	0.72	0.69	0.67
	0.6	−29.77	−3.94	−0.34	0.52	0.73	0.75	0.70	0.63	0.54
	0.7	−40.89	−5.66	−0.73	0.45	0.74	0.76	0.68	0.56	0.36
	0.8	−53.74	−7.64	−1.18	0.37	0.76	0.78	0.67	0.48	0.13
	0.9	−68.32	−9.89	−1.69	0.28	0.77	0.80	0.65	0.38	−0.15
	1.0	−84.66	−12.42	−2.27	0.18	0.80	0.83	0.62	0.26	−0.49
1.0	0.2	−1.17	0.81	1.02	1.05	1.05	1.06	1.09	1.18	1.48
	0.3	−5.09	−0.02	0.64	0.78	0.81	0.81	0.80	0.80	0.86
	0.4	−9.81	−0.72	0.48	0.74	0.79	0.78	0.76	0.74	0.77
	0.5	−15.89	−1.61	0.29	0.71	0.79	0.77	0.72	0.68	0.65
	0.6	−23.34	−2.69	0.07	0.68	0.80	0.77	0.69	0.60	0.49
	0.7	−32.15	−3.96	−0.18	0.66	0.82	0.78	0.67	0.51	0.27
	0.8	−42.35	−5.44	−0.47	0.64	0.85	0.79	0.63	0.41	0.00
	0.9	−53.94	−7.12	−0.80	0.61	0.88	0.81	0.60	0.28	−0.34
	1.0	−66.93	−9.01	−1.17	0.58	0.92	0.82	0.55	0.13	−0.75

		C_r Values								
		Q_b/Q_c								
A_s/A_c	A_b/A_c	0.1	0.2	0.3	0.4	0.5	0.6	0.7	0.8	0.9
0.2	0.2	−10.16	−2.08	−0.43	0.24	0.62	0.88	1.10	1.29	1.46
	0.3	−7.83	−1.20	0.03	0.50	0.77	0.97	1.14	1.30	1.46
	0.4	−5.62	−0.59	0.30	0.65	0.85	1.01	1.16	1.31	1.46
	0.5	−3.96	−0.18	0.48	0.74	0.90	1.04	1.18	1.32	1.47
	0.6	−2.71	0.12	0.60	0.80	0.94	1.06	1.19	1.32	1.47
	0.7	−1.75	0.34	0.70	0.85	0.96	1.07	1.19	1.32	1.47
	0.8	−0.99	0.52	0.77	0.88	0.98	1.08	1.20	1.32	1.47
	0.9	−0.38	0.66	0.82	0.91	0.99	1.09	1.20	1.33	1.47
	1.0	0.13	0.77	0.87	0.93	1.00	1.10	1.20	1.33	1.47
0.3	0.2	−23.33	−5.14	−1.67	−0.44	0.12	0.42	0.58	0.67	0.72
	0.3	−18.44	−3.44	−0.84	0.00	0.36	0.54	0.64	0.69	0.73
	0.4	−13.64	−2.22	−0.34	0.25	0.49	0.60	0.67	0.70	0.73
	0.5	−10.00	−1.37	0.00	0.41	0.57	0.64	0.69	0.71	0.73
	0.6	−7.26	−0.75	0.24	0.52	0.62	0.67	0.70	0.72	0.73
	0.7	−5.15	−0.29	0.41	0.60	0.66	0.69	0.71	0.72	0.73
	0.8	−3.48	0.07	0.55	0.66	0.69	0.70	0.71	0.72	0.73
	0.9	−2.14	0.36	0.65	0.71	0.72	0.72	0.72	0.72	0.73
	1.0	−1.03	0.60	0.74	0.75	0.73	0.73	0.72	0.72	0.73
0.4	0.2	−42.17	−9.48	−3.34	−1.23	−0.31	0.12	0.33	0.42	0.44
	0.3	−33.68	−6.60	−1.98	−0.53	0.05	0.31	0.41	0.45	0.45
	0.4	−25.24	−4.51	−1.13	−0.13	0.25	0.40	0.46	0.47	0.45
	0.5	−18.83	−3.04	−0.57	0.13	0.37	0.46	0.48	0.48	0.46
	0.6	−13.99	−1.97	−0.17	0.31	0.46	0.50	0.50	0.48	0.46
	0.7	−10.27	−1.17	0.12	0.42	0.52	0.53	0.51	0.49	0.46
	0.8	−7.32	−0.54	0.35	0.54	0.57	0.55	0.52	0.49	0.46
	0.9	−4.94	−0.04	0.53	0.62	0.61	0.57	0.53	0.49	0.46
	1.0	−2.98	0.37	0.68	0.68	0.64	0.58	0.54	0.50	0.46
0.5	0.2	−66.95	−15.18	−5.49	−2.21	0.81	−0.16	0.14	0.26	0.28
	0.3	−53.80	−10.77	−3.45	−1.17	−0.27	0.11	0.26	0.30	0.29
	0.4	−40.66	−7.54	−2.16	−0.57	0.02	0.25	0.32	0.33	0.30
	0.5	−30.68	−5.27	−1.30	−0.18	0.21	0.33	0.36	0.34	0.30
	0.6	−23.15	−3.62	−0.69	0.09	0.33	0.39	0.38	0.35	0.30
	0.7	−17.34	−2.38	−0.24	0.29	0.42	0.43	0.40	0.35	0.30
	0.8	−12.75	−1.41	0.11	0.44	0.49	0.47	0.41	0.36	0.30
	0.9	−9.04	−0.64	0.39	0.56	0.55	0.49	0.43	0.36	0.30
	1.0	−5.99	0.00	0.61	0.65	0.59	0.51	0.43	0.36	0.30

ED5-2 Wye, 45 Degree, Converging (*Concluded*)

		C_s Values (*Concluded*)								
		Q_s/Q_c								
A_s/A_c	A_b/A_c	0.1	0.2	0.3	0.4	0.5	0.6	0.7	0.8	0.9
0.6	0.2	−97.90	−22.29	−8.18	−3.41	−1.39	−0.46	−0.03	0.13	0.16
	0.3	−79.03	−15.99	−5.28	−1.94	−0.64	−0.09	0.13	0.19	0.17
	0.4	−60.15	−11.37	−3.44	−1.09	−0.23	0.10	0.21	0.22	0.18
	0.5	−45.80	−8.13	−2.22	−0.55	0.03	0.22	0.26	0.24	0.18
	0.6	−34.97	−5.77	−1.35	−0.17	0.20	0.30	0.30	0.25	0.18
	0.7	−26.62	−3.98	−0.71	0.11	0.33	0.36	0.32	0.26	0.19
	0.8	−20.02	−2.59	−0.21	0.33	0.43	0.41	0.34	0.26	0.19
	0.9	−14.68	−1.48	0.18	0.49	0.51	0.44	0.35	0.27	0.19
	1.0	−10.29	−0.57	0.51	0.63	0.57	0.47	0.37	0.27	0.19
0.7	0.2	−135.28	−30.88	−11.42	−4.85	−2.08	−0.80	−0.21	0.02	0.06
	0.3	−109.64	−22.35	−7.50	−2.88	−1.07	−0.31	0.00	0.09	0.07
	0.4	−83.96	−16.08	−5.02	−1.73	−0.52	−0.05	0.11	0.13	0.08
	0.5	−64.44	−11.67	−3.36	−0.99	−0.17	0.11	0.18	0.15	0.09
	0.6	−49.71	−8.47	−2.19	−0.48	0.06	0.22	0.22	0.17	0.09
	0.7	−38.35	−6.04	−1.31	−0.10	0.24	0.30	0.26	0.18	0.09
	0.8	−29.37	−4.16	−0.64	0.18	0.37	0.36	0.28	0.19	0.09
	0.9	−22.12	−2.65	−0.10	0.41	0.47	0.40	0.30	0.19	0.09
	1.0	−16.14	−1.41	0.33	0.60	0.55	0.44	0.32	0.20	0.09
0.8	0.2	−179.32	−41.01	−15.25	−6.55	−2.88	−1.19	−0.41	−0.10	−0.04
	0.3	−145.86	−29.89	−10.14	−3.99	−1.58	−0.55	−0.13	0.00	−0.02
	0.4	−112.34	−21.71	−6.91	−2.50	−0.86	−0.22	0.01	0.05	−0.01
	0.5	−86.85	−15.96	−4.75	−1.54	−0.41	−0.01	0.10	0.08	0.00
	0.6	−67.62	−11.78	−3.22	−0.87	−0.10	0.13	0.16	0.10	0.00
	0.7	−52.79	−8.62	−2.08	−0.38	0.12	0.23	0.20	0.11	0.00
	0.8	−41.06	−6.16	−1.20	0.00	0.29	0.31	0.23	0.12	0.01
	0.9	−31.59	−4.19	−0.51	0.29	0.43	0.37	0.26	0.13	0.01
	1.0	−23.78	−2.58	0.06	0.53	0.54	0.42	0.28	0.14	0.01
0.9	0.2	−230.27	−52.75	−19.69	−8.53	−3.81	−1.63	−0.63	−0.22	−0.13
	0.3	−187.95	−38.69	−13.24	−5.29	−2.16	−0.83	−0.28	−0.10	−0.10
	0.4	−145.53	−28.34	−9.15	−3.41	−1.26	−0.41	−0.10	−0.04	−0.09
	0.5	−113.27	−21.07	−6.42	−2.19	−0.69	−0.15	0.01	0.00	−0.09
	0.6	−88.94	−15.78	−4.48	−1.35	−0.30	0.03	0.09	0.03	−0.08
	0.7	−70.16	−11.78	−3.04	−0.73	−0.02	0.16	0.14	0.04	−0.08
	0.8	−55.33	−8.67	−1.93	−0.25	0.20	0.26	0.18	0.06	−0.07
	0.9	−43.33	−6.18	−1.05	0.12	0.37	0.33	0.21	0.07	−0.07
	1.0	−33.46	−4.14	−0.34	0.42	0.50	0.39	0.24	0.08	−0.07
1.0	0.2	−288.39	−66.15	−24.77	−10.80	−4.88	−2.14	−0.87	−0.35	−0.22
	0.3	−236.14	−48.79	−16.81	−6.80	−2.85	−1.15	−0.44	−0.20	−0.19
	0.4	−183.77	−36.02	−11.76	−4.47	−1.73	−0.63	−0.22	−0.12	−0.18
	0.5	−143.95	−27.05	−8.39	−2.98	−1.03	−0.31	−0.08	−0.08	−0.17
	0.6	−113.91	−20.52	−6.00	−1.93	−0.55	−0.09	0.01	−0.04	−0.16
	0.7	−90.73	−15.58	−4.23	−1.17	−0.20	0.07	0.08	−0.02	−0.16
	0.8	−72.41	−11.74	−2.86	−0.58	0.06	0.19	0.13	−0.01	−0.16
	0.9	−57.61	−8.66	−1.77	−0.12	0.27	0.28	0.16	0.01	−0.15
	1.0	−45.42	−6.15	−0.88	0.25	0.44	0.36	0.20	0.02	−0.13

ED5-3 Tee, D_c < or = 10 in., Converging

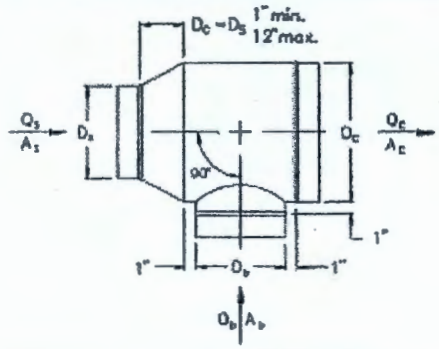

		C_s Values								
		Q_b/Q_c								
A_s/A_c	A_b/A_c	0.1	0.2	0.3	0.4	0.5	0.6	0.7	0.8	0.9
0.2	0.2	−24.56	−3.63	−0.36	0.59	0.93	1.08	1.14	1.19	1.27
	0.3	−56.72	−9.54	−2.15	−0.01	0.78	1.10	1.23	1.30	1.39
	0.4	−101.83	−17.86	−4.68	−0.87	0.52	1.09	1.32	1.41	1.48
	0.5	−159.91	−28.59	−7.98	−2.02	0.17	1.05	1.40	1.51	1.51
	0.6	−230.83	−41.68	−11.98	−3.39	−0.24	1.03	1.53	1.66	1.61
	0.7	−314.56	−57.10	−16.68	−4.98	−0.69	1.04	1.71	1.90	1.82
	0.8	−411.18	−74.90	−22.10	−6.82	−1.21	1.04	1.92	2.16	2.05
	0.9	−520.69	−95.08	−28.25	−8.90	−1.81	1.04	2.15	2.45	2.31
	1.0	−643.09	−117.63	−35.12	−11.24	−2.47	1.04	2.41	2.78	2.58
0.3	0.2	−14.05	−1.55	0.36	0.89	1.08	1.16	1.19	1.23	1.34
	0.3	−33.18	−4.91	−0.58	0.64	1.07	1.23	1.30	1.34	1.44
	0.4	−60.09	−9.68	−1.94	0.24	1.00	1.29	1.39	1.42	1.47
	0.5	−94.80	−15.89	−3.74	−0.33	0.87	1.32	1.46	1.46	1.38
	0.6	−136.97	−23.33	−5.84	−0.92	0.81	1.45	1.65	1.66	1.53
	0.7	−186.81	−32.14	−8.32	−1.62	0.74	1.61	1.88	1.88	1.70
	0.8	−244.33	−42.30	−11.19	−2.43	0.65	1.78	2.14	2.13	1.88
	0.9	−309.54	−53.82	−14.44	−3.35	0.54	1.98	2.42	2.41	2.08
	1.0	−382.43	−66.70	−18.08	−4.39	0.42	2.19	2.74	2.72	2.29
0.4	0.2	−8.95	−0.54	0.71	1.04	1.15	1.20	1.22	1.26	1.40
	0.3	−21.82	−2.70	0.16	0.94	1.19	1.29	1.32	1.35	1.47
	0.4	−39.99	−5.81	−0.67	0.73	1.19	1.35	1.39	1.39	1.41
	0.5	−63.37	−9.82	−1.75	0.45	1.18	1.42	1.47	1.43	1.32
	0.6	−91.72	−14.59	−2.97	0.20	1.26	1.60	1.67	1.60	1.43
	0.7	−125.23	−20.24	−4.41	−0.10	1.34	1.81	1.90	1.81	1.56
	0.8	−163.91	−26.77	−6.09	−0.45	1.43	2.04	2.16	2.03	1.69
	0.9	−207.76	−34.17	−7.99	−0.85	1.53	2.30	2.44	2.28	1.82
	1.0	−256.79	−42.45	−10.12	−1.30	1.63	2.58	2.75	2.54	1.95
0.5	0.2	−6.03	0.04	0.91	1.13	1.20	1.22	1.24	1.29	1.44
	0.3	−15.35	−1.46	0.56	1.09	1.25	1.30	1.32	1.35	1.46
	0.4	−28.59	−3.67	−0.01	0.96	1.26	1.34	1.35	1.32	1.29
	0.5	−45.45	−6.42	−0.66	0.85	1.33	1.45	1.45	1.38	1.24
	0.6	−65.92	−9.70	−1.41	0.78	1.46	1.64	1.63	1.53	1.32
	0.7	−90.12	−13.58	−2.29	0.69	1.61	1.86	1.85	1.70	1.39
	0.8	−118.07	−18.07	−3.32	0.57	1.78	2.11	2.09	1.89	1.46
	0.9	−149.75	−23.18	−4.49	0.43	1.96	2.38	2.35	2.09	1.53
	1.0	−185.19	−28.89	−5.81	0.27	2.16	2.67	2.63	2.31	1.57
0.6	0.2	−4.20	0.39	1.03	1.18	1.22	1.24	1.26	1.30	1.47
	0.3	−11.33	−0.72	0.79	1.16	1.27	1.30	1.31	1.33	1.43
	0.4	−21.57	−2.42	0.35	1.05	1.25	1.29	1.27	1.22	1.12
	0.5	−34.29	−4.35	−0.03	1.07	1.38	1.44	1.41	1.32	1.16
	0.6	−49.85	−6.72	−0.50	1.08	1.54	1.63	1.57	1.45	1.19
	0.7	−68.26	−9.55	−1.06	1.09	1.71	1.83	1.76	1.58	1.21
	0.8	−89.52	−12.81	−1.72	1.10	1.91	2.07	1.97	1.73	1.22
	0.9	−113.64	−16.52	−2.47	1.10	2.12	2.32	2.20	1.88	1.23
	1.0	−140.62	−20.68	−3.33	1.09	2.35	2.60	2.44	2.03	1.16

ED5-3 Tee, D_c < or = 10 in., Converging (Continued)

		C_s Values (*Concluded*)								
		Q_s/Q_c								
A_s/A_c	A_b/A_c	0.1	0.2	0.3	0.4	0.5	0.6	0.7	0.8	0.9
0.7	0.2	−3.00	0.62	1.10	1.21	1.23	1.24	1.26	1.31	1.49
	0.3	−8.74	−0.27	0.91	1.19	1.26	1.27	1.27	1.28	1.36
	0.4	−16.90	−1.59	0.58	1.11	1.25	1.27	1.24	1.18	1.06
	0.5	−26.99	−3.06	0.33	1.17	1.38	1.41	1.36	1.26	1.06
	0.6	−39.35	−4.86	0.02	1.22	1.54	1.57	1.50	1.35	1.05
	0.7	−53.97	−7.01	−0.35	1.29	1.72	1.76	1.65	1.45	1.02
	0.8	−70.87	−9.50	−0.79	1.35	1.91	1.97	1.82	1.54	0.96
	0.9	−90.04	−12.34	−1.31	1.41	2.12	2.19	2.00	1.64	0.86
	1.0	−111.50	−15.53	−1.89	1.46	2.34	2.43	2.19	1.73	0.72
0.8	0.2	−2.20	0.76	1.14	1.22	1.24	1.24	1.26	1.31	1.49
	0.3	−7.04	−0.01	0.95	1.18	1.23	1.23	1.23	1.22	1.27
	0.4	−13.77	−1.06	0.71	1.13	1.24	1.24	1.20	1.13	1.00
	0.5	−22.11	−2.24	0.54	1.20	1.36	1.36	1.30	1.19	0.97
	0.6	−32.33	−3.69	0.31	1.27	1.50	1.50	1.41	1.25	0.90
	0.7	−44.42	−5.41	0.04	1.34	1.66	1.65	1.53	1.30	0.81
	0.8	−58.40	−7.42	−0.29	1.42	1.83	1.83	1.65	1.35	0.67
	0.9	−74.28	−9.72	−0.67	1.49	2.01	2.01	1.78	1.38	0.49
	1.0	−92.06	−12.30	−1.12	1.56	2.21	2.20	1.92	1.40	0.24
0.9	0.2	−1.67	0.85	1.16	1.22	1.23	1.24	1.25	1.30	1.48
	0.3	−5.95	0.12	0.95	1.14	1.18	1.18	1.16	1.15	1.14
	0.4	−11.68	−0.74	0.77	1.12	1.20	1.20	1.16	1.08	0.93
	0.5	−18.85	−1.74	0.63	1.18	1.31	1.30	1.23	1.11	0.86
	0.6	−27.63	−2.98	0.44	1.24	1.42	1.41	1.31	1.13	0.75
	0.7	−38.04	−4.45	0.21	1.30	1.55	1.53	1.39	1.14	0.58
	0.8	−50.07	−6.17	−0.07	1.36	1.69	1.66	1.47	1.13	0.37
	0.9	−63.75	−8.14	−0.40	1.42	1.83	1.79	1.54	1.11	0.09
	1.0	−79.08	−10.36	−0.79	1.46	1.98	1.92	1.61	1.06	−0.26
1.0	0.2	−1.33	0.89	1.16	1.21	1.22	1.22	1.24	1.29	1.46
	0.3	−5.30	0.15	0.90	1.08	1.11	1.11	1.09	1.06	0.99
	0.4	−10.31	−0.57	0.78	1.09	1.16	1.15	1.11	1.03	0.86
	0.5	−16.71	−1.47	0.64	1.13	1.24	1.22	1.15	1.03	0.74
	0.6	−24.56	−2.59	0.46	1.17	1.32	1.30	1.20	1.01	0.57
	0.7	−33.87	−3.93	0.23	1.20	1.41	1.38	1.24	0.97	0.34
	0.8	−44.64	−5.49	−0.05	1.22	1.51	1.46	1.27	0.91	0.05
	0.9	−56.89	−7.29	−0.38	1.24	1.59	1.54	1.28	0.82	−0.33
	1.0	−70.62	−9.32	−0.77	1.24	1.68	1.61	1.28	0.69	−0.80

ED5-3 Tee, D_c < or = 10 in., Converging

		C_s Values								
		Q_s/Q_c								
A_s/A_c	A_b/A_c	0.1	0.2	0.3	0.4	0.5	0.6	0.7	0.8	0.9
0.2	0.2	18.11	3.42	1.62	1.11	0.90	0.80	0.74	0.70	0.68
	0.3	12.67	2.79	1.45	1.04	0.87	0.78	0.73	0.70	0.68
	0.4	9.98	2.47	1.36	1.01	0.85	0.77	0.72	0.69	0.67
	0.5	8.39	2.27	1.30	0.98	0.84	0.76	0.72	0.69	0.67
	0.6	7.34	2.13	1.26	0.96	0.83	0.76	0.72	0.69	0.67
	0.7	6.61	2.02	1.22	0.95	0.82	0.75	0.71	0.69	0.67
	0.8	6.08	1.94	1.19	0.93	0.81	0.75	0.71	0.68	0.67
	0.9	5.68	1.87	1.17	0.92	0.80	0.74	0.70	0.68	0.66
	1.0	4.55	1.61	1.05	0.86	0.76	0.71	0.68	0.66	0.65
0.3	0.2	44.33	7.19	2.80	1.57	1.08	0.84	0.71	0.63	0.57
	0.3	29.24	5.46	2.33	1.40	1.00	0.80	0.69	0.62	0.57
	0.4	21.58	4.59	2.09	1.30	0.96	0.78	0.67	0.61	0.56
	0.5	17.62	4.06	1.93	1.24	0.92	0.76	0.66	0.60	0.56
	0.6	14.90	3.71	1.82	1.19	0.90	0.74	0.65	0.59	0.55
	0.7	13.06	3.45	1.74	1.15	0.88	0.73	0.64	0.59	0.55
	0.8	11.78	3.26	1.67	1.12	0.86	0.72	0.63	0.58	0.54
	0.9	9.02	2.64	1.41	0.99	0.77	0.66	0.59	0.54	0.51
	1.0	8.36	2.52	1.36	0.95	0.75	0.65	0.58	0.54	0.51

ED5-3 Tee, D_c < or = 10 in., Converging (Continued)

		C_s Values (Concluded)								
		Q_s/Q_c								
A_s/A_c	A_b/A_c	0.1	0.2	0.3	0.4	0.5	0.6	0.7	0.8	0.9
0.4	0.2	78.99	12.25	4.42	2.26	1.39	0.97	0.74	0.60	0.50
	0.3	50.14	8.96	3.54	1.92	1.24	0.90	0.70	0.57	0.49
	0.4	36.26	7.32	3.08	1.74	1.16	0.85	0.67	0.56	0.48
	0.5	28.38	6.35	2.80	1.63	1.10	0.82	0.65	0.54	0.47
	0.6	23.50	5.72	2.61	1.54	1.05	0.79	0.63	0.53	0.46
	0.7	20.32	5.27	2.46	1.47	1.02	0.77	0.62	0.52	0.45
	0.8	14.94	4.13	1.98	1.21	0.85	0.65	0.53	0.46	0.40
	0.9	13.55	3.88	1.89	1.16	0.82	0.63	0.52	0.45	0.39
	1.0	12.66	3.69	1.80	1.12	0.79	0.62	0.51	0.44	0.39
0.5	0.2	114.73	17.76	6.27	3.07	1.79	1.16	0.81	0.60	0.46
	0.3	70.56	12.71	4.92	2.56	1.56	1.05	0.75	0.56	0.44
	0.4	49.68	10.24	4.23	2.29	1.43	0.98	0.71	0.54	0.42
	0.5	38.12	8.81	3.81	2.11	1.34	0.93	0.68	0.52	0.41
	0.6	31.23	7.90	3.53	1.99	1.27	0.88	0.65	0.50	0.39
	0.7	21.87	6.00	2.75	1.57	1.01	0.71	0.52	0.40	0.32
	0.8	19.30	5.57	2.59	1.49	0.96	0.67	0.50	0.38	0.30
	0.9	17.84	5.27	2.46	1.42	0.92	0.65	0.48	0.37	0.29
	1.0	17.16	5.05	2.36	1.36	0.88	0.62	0.46	0.35	0.28
0.6	0.2	142.32	22.64	8.06	3.91	2.23	1.39	0.92	0.63	0.44
	0.3	84.89	16.05	6.28	3.24	1.92	1.23	0.83	0.58	0.41
	0.4	58.43	12.90	5.39	2.88	1.75	1.14	0.78	0.55	0.39
	0.5	44.34	11.13	4.86	2.66	1.63	1.07	0.74	0.52	0.37
	0.6	29.06	8.20	3.69	2.04	1.25	0.81	0.55	0.38	0.26
	0.7	24.71	7.51	3.44	1.91	1.18	0.77	0.52	0.35	0.24
	0.8	22.56	7.06	3.26	1.81	1.11	0.72	0.48	0.33	0.22
	0.9	21.89	6.78	3.12	1.73	1.06	0.68	0.45	0.30	0.20
	1.0	22.24	6.61	3.00	1.65	1.00	0.65	0.43	0.28	0.18
0.7	0.2	152.32	25.82	9.48	4.66	2.65	1.63	1.04	0.68	0.44
	0.3	87.85	18.38	7.46	3.88	2.29	1.44	0.94	0.62	0.40
	0.4	59.34	14.92	6.47	3.48	2.09	1.33	0.87	0.58	0.37
	0.5	35.18	10.56	4.78	2.60	1.55	0.97	0.62	0.38	0.22
	0.6	28.26	9.51	4.41	2.42	1.45	0.90	0.57	0.35	0.19
	0.7	25.45	8.91	4.16	2.28	1.36	0.85	0.53	0.32	0.17
	0.8	25.21	8.60	3.99	2.18	1.29	0.79	0.49	0.28	0.14
	0.9	26.68	8.48	3.86	2.08	1.22	0.74	0.45	0.25	0.12
	1.0	29.34	8.49	3.77	2.01	1.16	0.70	0.41	0.22	0.10
0.8	0.2	136.74	26.38	10.30	5.22	3.01	1.85	1.17	0.74	0.45
	0.3	75.52	19.20	8.32	4.45	2.64	1.66	1.06	0.67	0.41
	0.4	37.55	12.79	5.92	3.23	1.91	1.17	0.72	0.42	0.21
	0.5	27.25	11.28	5.41	2.98	1.77	1.08	0.66	0.37	0.18
	0.6	24.23	10.57	5.10	2.81	1.66	1.01	0.60	0.33	0.14
	0.7	25.36	10.32	4.91	2.69	1.57	0.94	0.55	0.29	0.11
	0.8	29.09	10.37	4.80	2.59	1.50	0.88	0.50	0.25	0.08
	0.9	34.55	10.60	4.74	2.50	1.42	0.82	0.46	0.21	0.05
	1.0	41.23	10.98	4.71	2.43	1.36	0.77	0.41	0.18	0.01
0.9	0.2	90.70	23.73	10.34	5.54	3.28	2.05	1.30	0.81	0.47
	0.3	29.93	14.20	6.95	3.86	2.30	1.41	0.85	0.48	0.22
	0.4	16.27	12.21	6.28	3.55	2.12	1.29	0.77	0.42	0.18
	0.5	14.80	11.58	5.96	3.35	1.99	1.20	0.70	0.37	0.14
	0.6	19.43	11.62	5.81	3.23	1.89	1.13	0.64	0.32	0.10
	0.7	27.55	12.06	5.77	3.14	1.81	1.06	0.59	0.27	0.06
	0.8	37.84	12.73	5.79	3.07	1.74	0.99	0.53	0.23	0.02
	0.9	49.59	13.57	5.85	3.01	1.67	0.93	0.48	0.18	−0.02
	1.0	62.35	14.52	5.94	2.97	1.61	0.87	0.42	0.14	−0.06
1.0	0.2	−6.40	12.70	7.32	4.31	2.64	1.64	1.00	0.56	0.25
	0.3	−17.35	10.90	6.66	3.97	2.44	1.51	0.90	0.49	0.20
	0.4	−11.05	11.02	6.50	3.82	2.32	1.41	0.83	0.43	0.15
	0.5	2.15	11.91	6.54	3.74	2.23	1.33	0.76	0.38	0.10
	0.6	18.80	13.18	6.67	3.70	2.16	1.26	0.70	0.32	0.06
	0.7	37.42	14.67	6.86	3.68	2.09	1.19	0.63	0.26	0.01
	0.8	57.27	16.30	7.08	3.67	2.01	1.12	0.57	0.21	−0.04
	0.9	77.95	18.02	7.35	3.66	1.97	1.06	0.51	0.15	−0.09
	1.0	99.20	19.80	7.61	3.67	1.92	1.00	0.45	0.10	−0.14

ED5-3 Tee, D_c > 10 in., Converging *(Continued)*

		C_b Values								
		Q_b/Q_c								
A_c/A_c	A_b/A_c	0.1	0.2	0.3	0.4	0.5	0.6	0.7	0.8	0.9
0.2	0.2	−26.08	−4.19	−0.70	0.33	0.71	0.87	0.93	0.95	0.93
	0.3	−59.71	−10.53	−2.72	−0.43	0.43	0.78	0.91	0.95	0.91
	0.4	−106.78	−19.39	−5.53	−1.46	0.05	0.67	0.91	0.97	0.91
	0.5	−167.36	−30.77	−9.12	−2.78	−0.42	0.55	0.93	1.02	0.93
	0.6	−241.50	−44.68	−13.50	−4.37	−0.97	0.42	0.96	1.10	0.98
	0.7	−329.25	−61.15	−18.68	−6.25	−1.62	0.27	1.02	1.21	1.06
	0.8	−430.67	−80.18	−24.67	−8.42	−2.37	0.10	1.09	1.35	1.17
	0.9	−545.81	−101.78	−31.47	−10.89	−3.22	−0.08	1.17	1.52	1.31
	1.0	−674.72	−125.98	−39.08	−13.64	−4.17	−0.28	1.28	1.72	1.48
0.3	0.2	−15.50	−2.16	−0.04	0.58	0.81	0.90	0.93	0.94	0.91
	0.3	−35.76	−5.90	−1.20	0.16	0.66	0.85	0.92	0.92	0.88
	0.4	−64.09	−11.09	−2.78	−0.38	0.48	0.82	0.93	0.94	0.86
	0.5	−100.54	−17.73	−4.78	−1.06	0.29	0.80	0.97	0.98	0.87
	0.6	−145.16	−25.85	−7.21	−1.86	0.06	0.80	1.05	1.05	0.90
	0.7	−198.01	−35.46	−10.08	−2.81	−0.19	0.82	1.15	1.16	0.96
	0.8	−259.13	−46.56	−13.39	−3.89	−0.47	0.85	1.28	1.30	1.05
	0.9	−328.59	−59.18	−17.15	−5.11	−0.78	0.89	1.44	1.47	1.17
	1.0	−406.44	−73.33	−21.37	−6.48	−1.12	0.94	1.63	1.68	1.32
0.4	0.2	−10.31	−1.18	0.26	0.69	0.84	0.91	0.93	0.93	0.90
	0.3	−23.96	−3.65	−0.48	0.43	0.75	0.88	0.91	0.91	0.86
	0.4	−42.98	−7.03	−1.46	0.11	0.67	0.87	0.93	0.91	0.84
	0.5	−67.44	−11.35	−2.69	−0.26	0.59	0.90	0.97	0.94	0.84
	0.6	−97.39	−16.60	−4.17	−0.69	0.52	0.95	1.06	1.01	0.87
	0.7	−132.88	−22.81	−5.91	−1.17	0.46	1.03	1.17	1.11	0.92
	0.8	−173.96	−29.99	−7.90	−1.73	0.40	1.15	1.33	1.24	1.00
	0.9	−220.69	−38.15	−10.16	−2.35	0.35	1.29	1.51	1.40	1.11
	1.0	−273.12	−47.31	−12.70	−3.04	0.29	1.45	1.74	1.61	1.26
0.5	0.2	−7.26	−0.62	0.43	0.75	0.86	0.91	0.93	0.93	0.90
	0.3	−16.99	−2.35	−0.07	0.57	0.80	0.89	0.91	0.90	0.87
	0.4	−30.49	−4.67	−0.72	0.38	0.76	0.89	0.92	0.90	0.85
	0.5	−47.82	−7.61	−1.50	0.19	0.75	0.93	0.97	0.93	0.85
	0.6	−69.03	−11.17	−2.42	−0.03	0.76	1.01	1.05	0.98	0.88
	0.7	−94.17	−15.37	−3.49	−0.26	0.80	1.13	1.17	1.07	0.93
	0.8	−123.30	−20.22	−4.71	−0.50	0.87	1.29	1.33	1.20	1.02
	0.9	−156.48	−25.73	−6.09	−0.77	0.96	1.48	1.53	1.36	1.13
	1.0	−193.74	−31.92	−7.63	−1.07	1.06	1.71	1.77	1.56	1.28
0.6	0.2	−5.28	−0.27	0.54	0.78	0.88	0.91	0.93	0.93	0.91
	0.3	−12.43	−1.51	0.18	0.66	0.83	0.89	0.91	0.91	0.89
	0.4	−22.29	−3.15	−0.25	0.55	0.82	0.90	0.92	0.91	0.88
	0.5	−34.92	−5.19	−0.74	0.46	0.84	0.95	0.96	0.93	0.89
	0.6	−50.35	−7.64	−1.30	0.38	0.91	1.05	1.04	0.98	0.93
	0.7	−68.66	−10.52	−1.94	0.32	1.01	1.18	1.16	1.07	0.99
	0.8	−89.89	−13.83	−2.65	0.26	1.15	1.36	1.33	1.19	1.08
	0.9	−114.09	−17.61	−3.46	0.22	1.32	1.59	1.53	1.35	1.21
	1.0	−141.33	−21.84	−4.35	0.18	1.54	1.85	1.77	1.54	1.37
0.7	0.2	−3.90	−0.03	0.61	0.81	0.89	0.92	0.94	0.94	0.93
	0.3	−9.25	−0.94	0.25	0.72	0.85	0.90	0.92	0.92	0.92
	0.4	−16.34	−2.10	0.07	0.66	0.85	0.91	0.93	0.92	0.92
	0.5	−25.85	−3.51	−0.22	0.64	0.90	0.97	0.97	0.94	0.95
	0.6	−37.21	−5.18	−0.54	0.65	1.00	1.07	1.05	1.00	1.00
	0.7	−50.68	−7.13	−0.87	0.70	1.14	1.22	1.17	1.08	1.08
	0.8	−66.31	−9.37	−1.24	0.78	1.33	1.41	1.33	1.21	1.20
	0.9	−84.17	−11.92	−1.64	0.89	1.56	1.65	1.53	1.36	1.34
	1.0	−104.29	−14.78	−2.09	1.03	1.84	1.94	1.78	1.56	1.52
0.8	0.2	−2.90	0.15	0.67	0.83	0.90	0.93	0.94	0.95	0.96
	0.3	−6.91	−0.53	0.47	0.76	0.87	0.91	0.93	0.94	0.96
	0.4	−12.31	−1.34	0.30	0.74	0.88	0.93	0.94	0.95	0.98
	0.5	−19.16	−2.29	0.15	0.77	0.94	0.99	0.98	0.98	1.02
	0.6	−27.50	−3.39	0.01	0.84	1.06	1.09	1.06	1.03	1.11
	0.7	−37.38	−4.66	−0.11	0.97	1.23	1.24	1.18	1.12	1.21
	0.8	−48.87	−6.11	−0.22	1.15	1.46	1.45	1.35	1.25	1.35
	0.9	−62.01	−7.75	−0.33	1.37	1.73	1.70	1.55	1.41	1.52
	1.0	−76.85	−9.59	−0.44	1.63	2.06	2.00	1.80	1.61	1.73

ED5-3 Tee, D_c > 10 in., Converging *(Continued)*

		C_s Values *(Concluded)*								
		Q_s/Q_c								
A_s/A_c	A_b/A_c	0.1	0.2	0.3	0.4	0.5	0.6	0.7	0.8	0.9
0.9	0.2	−2.14	0.28	0.71	0.85	0.91	0.94	0.96	0.97	0.99
	0.3	−5.14	−0.21	0.57	0.80	0.88	0.92	0.95	0.97	1.02
	0.4	−9.09	−0.76	0.47	0.80	0.91	0.94	0.96	0.98	1.06
	0.5	−14.06	−1.36	0.42	0.86	0.98	1.01	1.01	1.02	1.14
	0.6	−20.08	−2.04	0.42	0.99	1.11	1.12	1.09	1.09	1.24
	0.7	−27.21	−2.79	0.47	1.17	1.30	1.27	1.21	1.19	1.38
	0.8	−35.50	−3.63	0.55	1.42	1.55	1.49	1.38	1.32	1.55
	0.9	−45.01	−4.57	0.66	1.72	1.86	1.75	1.59	1.49	1.75
	1.0	−55.79	−5.64	0.80	2.08	2.22	2.06	1.84	1.69	1.99
1.0	0.2	−1.54	0.39	0.74	0.87	0.92	0.95	0.97	0.99	1.03
	0.3	−3.75	0.03	0.64	0.83	0.90	0.94	0.97	1.00	1.08
	0.4	−6.57	−0.32	0.61	0.85	0.93	0.97	0.99	1.03	1.16
	0.5	−10.05	−0.65	0.64	0.94	1.02	1.03	1.04	1.08	1.26
	0.6	−14.24	−0.98	0.74	1.10	1.16	1.15	1.13	1.16	1.40
	0.7	−19.20	−1.32	0.91	1.33	1.37	1.31	1.26	1.27	1.57
	0.8	−24.98	−1.69	1.14	1.63	1.63	1.53	1.43	1.41	1.78
	0.9	−31.62	−2.10	1.42	2.00	1.96	1.80	1.64	1.59	2.02
	1.0	−39.19	−2.55	1.76	2.43	2.35	2.12	1.90	1.81	2.30

ED5-3 Tee, D_c > 10 in., Converging

		C_s Values								
		Q_s/Q_c								
A_s/A_c	A_b/A_c	0.1	0.2	0.3	0.4	0.5	0.6	0.7	0.8	0.9
0.2	0.2	20.43	3.28	1.45	0.98	0.81	0.73	0.69	0.66	0.64
	0.3	12.53	2.40	1.22	0.90	0.77	0.71	0.68	0.66	0.64
	0.4	8.78	1.98	1.12	0.86	0.76	0.70	0.67	0.66	0.64
	0.5	6.69	1.75	1.06	0.84	0.75	0.70	0.67	0.65	0.64
	0.6	5.43	1.61	1.02	0.83	0.74	0.70	0.67	0.65	0.64
	0.7	4.64	1.52	1.00	0.82	0.74	0.70	0.67	0.65	0.64
	0.8	4.15	1.47	0.98	0.81	0.74	0.69	0.67	0.65	0.64
	0.9	3.86	1.43	0.97	0.81	0.74	0.69	0.67	0.65	0.64
	1.0	3.71	1.42	0.97	0.81	0.73	0.69	0.67	0.65	0.64
0.3	0.2	51.24	7.11	2.49	1.33	0.90	0.70	0.60	0.54	0.50
	0.3	29.57	4.70	1.87	1.10	0.80	0.66	0.58	0.53	0.50
	0.4	19.40	3.57	1.58	1.00	0.76	0.64	0.57	0.52	0.50
	0.5	13.84	2.96	1.42	0.94	0.73	0.62	0.56	0.52	0.50
	0.6	10.58	2.59	1.32	0.90	0.72	0.62	0.56	0.52	0.49
	0.7	8.64	2.38	1.27	0.88	0.71	0.61	0.56	0.52	0.49
	0.8	7.52	2.25	1.23	0.87	0.70	0.61	0.56	0.52	0.49
	0.9	6.95	2.19	1.22	0.87	0.70	0.61	0.56	0.52	0.49
	1.0	6.76	2.17	1.21	0.86	0.70	0.61	0.55	0.52	0.49
0.4	0.2	90.30	12.10	3.91	1.85	1.08	0.74	0.55	0.45	0.38
	0.3	49.68	7.59	2.74	1.42	0.90	0.65	0.51	0.43	0.37
	0.4	30.96	5.51	2.21	1.23	0.82	0.61	0.49	0.42	0.37
	0.5	21.00	4.40	1.92	1.13	0.78	0.59	0.48	0.42	0.37
	0.6	15.43	3.78	1.76	1.07	0.75	0.58	0.48	0.41	0.37
	0.7	12.36	3.44	1.67	1.04	0.74	0.57	0.48	0.41	0.37
	0.8	10.86	3.27	1.63	1.02	0.73	0.57	0.47	0.41	0.37
	0.9	10.40	3.22	1.61	1.01	0.73	0.57	0.47	0.41	0.37
	1.0	10.67	3.25	1.62	1.02	0.73	0.57	0.47	0.41	0.37
0.5	0.2	126.36	16.99	5.39	2.42	1.32	0.81	0.54	0.38	0.28
	0.3	65.94	10.28	3.65	1.79	1.05	0.68	0.48	0.35	0.27
	0.4	38.84	7.27	2.87	1.51	0.93	0.63	0.45	0.34	0.27
	0.5	25.07	5.74	2.47	1.37	0.87	0.60	0.44	0.33	0.26
	0.6	17.98	4.95	2.27	1.29	0.84	0.58	0.43	0.33	0.26
	0.7	14.69	4.58	2.17	1.26	0.82	0.58	0.42	0.33	0.26
	0.8	13.78	4.48	2.15	1.25	0.82	0.57	0.43	0.33	0.26
	0.9	14.45	4.56	2.17	1.26	0.82	0.58	0.43	0.33	0.26
	1.0	16.24	4.76	2.22	1.28	0.83	0.58	0.43	0.33	0.26

ED5–3 Tee, D_c > 10 in., Converging (Continued)

		C_t Values (Concluded)								
		Q_s/Q_c								
A_s/A_c	A_b/A_c	0.1	0.2	0.3	0.4	0.5	0.6	0.7	0.8	0.9
0.6	0.2	146.22	20.32	6.54	2.92	1.54	0.89	0.54	0.33	0.20
	0.3	70.93	11.95	4.37	2.13	1.20	0.73	0.46	0.30	0.18
	0.4	38.66	8.37	3.44	1.80	1.06	0.67	0.43	0.28	0.18
	0.5	23.61	6.70	3.00	1.64	0.99	0.64	0.42	0.28	0.18
	0.6	17.17	5.98	2.82	1.57	0.97	0.62	0.41	0.27	0.18
	0.7	15.64	5.81	2.77	1.56	0.96	0.62	0.41	0.27	0.18
	0.8	17.19	5.98	2.82	1.57	0.97	0.62	0.41	0.27	0.18
	0.9	20.79	6.38	2.92	1.61	0.98	0.63	0.42	0.27	0.18
	1.0	25.82	6.94	3.07	1.66	1.00	0.64	0.42	0.28	0.18
0.7	0.2	137.78	20.74	7.01	3.21	1.70	0.96	0.54	0.29	0.13
	0.3	58.74	11.96	4.73	2.39	1.34	0.79	0.47	0.26	0.12
	0.4	27.78	8.52	3.84	2.06	1.21	0.73	0.44	0.24	0.11
	0.5	16.04	7.21	3.50	1.94	1.15	0.71	0.43	0.24	0.11
	0.6	13.91	6.97	3.44	1.92	1.14	0.70	0.42	0.24	0.11
	0.7	17.28	7.35	3.54	1.95	1.16	0.71	0.43	0.24	0.11
	0.8	24.08	8.10	3.73	2.02	1.19	0.72	0.43	0.24	0.11
	0.9	33.17	9.11	3.99	2.12	1.23	0.74	0.44	0.25	0.11
	1.0	43.86	10.30	4.30	2.23	1.28	0.76	0.45	0.25	0.11
0.8	0.2	92.97	17.35	6.57	3.21	1.75	0.99	0.55	0.27	0.08
	0.3	26.98	10.02	4.67	2.52	1.46	0.86	0.48	0.24	0.07
	0.4	6.75	7.77	4.09	2.31	1.37	0.81	0.46	0.23	0.06
	0.5	4.83	7.56	4.03	2.29	1.36	0.81	0.46	0.23	0.06
	0.6	12.05	8.36	4.24	2.37	1.39	0.83	0.47	0.23	0.07
	0.7	24.51	9.75	4.60	2.49	1.45	0.85	0.48	0.24	0.07
	0.8	40.23	11.49	5.05	2.66	1.52	0.88	0.50	0.24	0.07
	0.9	58.13	13.48	5.57	2.85	1.60	0.92	0.51	0.25	0.07
	1.0	77.56	15.64	6.13	3.05	1.68	0.96	0.53	0.26	0.08
0.9	0.2	10.77	10.05	5.20	2.91	1.70	0.99	0.55	0.25	0.04
	0.3	−21.27	6.49	4.28	2.57	1.56	0.93	0.52	0.24	0.04
	0.4	−19.11	6.73	4.34	2.60	1.57	0.93	0.52	0.24	0.04
	0.5	−3.28	8.49	4.80	2.76	1.64	0.97	0.54	0.24	0.04
	0.6	19.39	11.01	5.45	3.00	1.74	1.01	0.56	0.25	0.04
	0.7	45.97	13.96	6.21	3.27	1.86	1.07	0.58	0.27	0.05
	0.8	74.99	17.18	7.05	3.58	1.98	1.13	0.61	0.28	0.05
	0.9	105.64	20.59	7.93	3.89	2.12	1.19	0.64	0.29	0.06
	1.0	137.43	24.12	8.85	4.23	2.26	1.26	0.67	0.31	0.06
1.0	0.2	−99.78	−0.17	3.15	2.40	1.58	0.98	0.56	0.25	0.02
	0.3	−75.42	2.54	3.85	2.65	1.69	1.03	0.58	0.26	0.03
	0.4	−38.31	6.66	4.92	3.04	1.86	1.11	0.62	0.28	0.03
	0.5	3.90	11.35	6.14	3.48	2.04	1.20	0.66	0.29	0.04
	0.6	48.66	16.32	7.43	3.94	2.24	1.29	0.70	0.31	0.04
	0.7	94.88	21.46	8.76	4.43	2.45	1.38	0.75	0.33	0.05
	0.8	142.01	26.70	10.12	4.92	2.66	1.48	0.79	0.35	0.06
	0.9	189.74	32.00	11.49	5.41	2.87	1.58	0.84	0.37	0.07
	1.0	237.90	37.35	12.88	5.92	3.08	1.68	0.88	0.39	0.07

ED5-6 Capped Wye, Branch with 45-Degree Elbow, Branch 90 Degrees to Main, Converging, $r/D_b = 1.5$

A_b/A_c	0.1	0.2	0.3	0.4	0.5	0.6	0.7	0.8	0.9	1.0
C_b	1.26	1.07	0.94	0.86	0.81	0.76	0.71	0.67	0.64	0.64

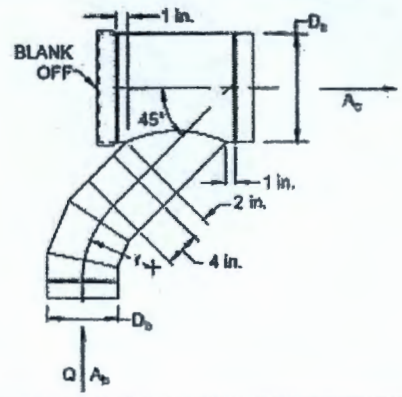

ED5-9 Symmetrical Wye, 60 Degree, $D_{b1} \geq D_{b2}$, Converging

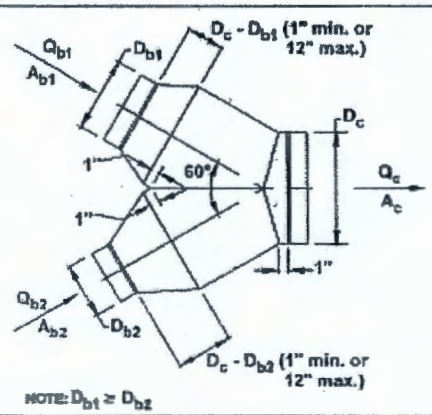

		C_{b1} Values								
		Q_{b1}/Q_c								
A_{b1}/A_c	A_{b2}/A_c	0.1	0.2	0.3	0.4	0.5	0.6	0.7	0.8	0.9
0.2	0.2	−11.95	−1.89	−0.09	0.41	0.62	0.74	0.80	0.80	0.79
	0.3	−11.95	−1.89	−0.09	0.41	0.62	0.74	0.80	0.80	0.79
0.3	0.2	−45.45	−9.39	−2.44	−0.41	0.33	0.68	0.89	1.03	1.13
	0.3	−16.88	−2.92	−0.09	0.59	0.86	1.02	1.09	1.10	1.08
0.4	0.2	−72.04	−14.80	−4.26	−1.24	−0.10	0.33	0.50	0.57	0.63
	0.3	−52.95	−9.91	−2.86	−0.69	0.07	0.30	0.40	0.49	0.62
	0.4	−28.86	−6.22	−2.15	−0.57	0.19	0.55	0.72	0.79	0.85
0.5	0.2	−126.04	−23.80	−7.44	−2.64	−0.85	−0.13	0.16	0.26	0.28
	0.3	−91.07	−16.91	−5.16	−1.73	−0.46	0.04	0.23	0.29	0.28
	0.4	−56.41	−10.07	−2.90	−0.82	−0.07	0.21	0.30	0.31	0.29
	0.5	−30.58	−5.23	−1.06	0.00	0.32	0.43	0.47	0.47	0.41
0.6	0.2	−209.81	−39.31	−12.13	−4.35	−1.54	−0.40	0.06	0.22	0.23
	0.3	−147.43	−27.69	−8.75	−3.20	−1.13	−0.29	0.05	0.17	0.18
	0.4	−85.06	−16.07	−5.38	−2.04	−0.71	−0.17	0.04	0.12	0.13
	0.5	−58.22	−11.03	−3.84	−1.49	−0.50	−0.09	0.07	0.11	0.12
	0.6	−40.57	−7.86	−2.60	−0.99	−0.26	0.00	0.14	0.21	0.25
0.7	0.2	−291.57	−54.52	−17.03	−6.21	−2.27	−0.68	−0.04	0.19	0.21
	0.3	−197.37	−38.02	−12.54	−4.92	−2.01	−0.76	−0.22	0.01	0.08
	0.4	−102.97	−21.41	−8.05	−3.64	−1.75	−0.84	−0.40	0.17	−0.05
	0.5	−65.15	−14.75	−6.16	−3.07	−1.61	−0.85	−0.44	−0.22	−0.09
	0.6	−48.24	−11.70	−4.97	−2.59	−1.40	−0.76	−0.37	0.15	−0.03
	0.7	−73.02	−16.68	−6.90	−3.29	−1.61	−0.80	−0.29	0.02	0.22
0.8	0.2	−373.33	−69.73	−21.93	−8.08	−3.00	−0.95	−0.13	0.15	0.20
	0.3	−247.31	−48.35	16.32	−6.65	−2.89	−1.24	−0.49	−0.15	−0.02
	0.4	−120.88	−26.76	−10.71	−5.24	−2.78	−1.52	−0.84	−0.45	−0.24

ED5-9 Symmetrical Wye, 60 Degree, $D_{b1} \geq D_{b2}$, Converging (Continued)

		C_{b1} Values (*Concluded*)								
		Q_{b1}/Q_c								
A_{b1}/A_c	A_{b2}/A_c	0.1	0.2	0.3	0.4	0.5	0.6	0.7	0.8	0.9
	0.5	−72.08	−18.46	−8.48	−4.65	−2.71	−1.61	−0.95	−0.55	−0.31
	0.6	−55.91	−15.54	−7.35	−4.20	−2.54	−1.53	−0.89	−0.51	−0.30
	0.7	−80.68	−20.52	−9.27	−4.90	−2.75	−1.56	−0.80	−0.34	−0.06
	0.8	−105.46	−25.49	−11.19	−5.59	−2.96	−1.60	−0.72	−0.18	0.19
0.9	0.2	−479.24	−89.56	−28.39	−10.59	−4.04	−1.41	−0.36	0.01	0.09
	0.3	−305.31	−61.27	−21.50	−9.28	−4.39	−2.16	−1.07	−0.54	−0.29
	0.4	−131.17	−32.88	−14.60	−7.98	−4.74	−2.91	−1.79	−1.10	−0.68
	0.5	−67.90	−22.76	−12.17	−7.53	−4.89	−3.19	−2.05	−1.30	−0.81
	0.6	−68.95	−23.08	−12.11	−7.45	−4.84	−3.15	−2.01	−1.26	−0.79
	0.7	−90.48	−27.35	−13.58	−7.95	−4.97	−3.16	−1.96	−1.17	−0.65
	0.8	−112.02	−31.63	−15.05	−8.44	−5.11	−3.18	−1.90	−1.07	−0.51
	0.9	−130.32	−35.19	−16.07	−8.70	−5.18	−3.19	−1.88	−1.08	−0.53
1.0	0.2	−585.16	−109.39	−34.85	−13.11	−5.09	−1.86	−0.59	−0.13	−0.01
	0.3	−363.31	−74.20	−26.68	−11.91	−5.90	−3.08	−1.66	−0.94	−0.56
	0.4	−141.46	−39.00	−18.50	−10.71	−6.71	−4.29	−2.74	−1.74	−1.12
	0.5	−63.71	−27.06	−15.85	−10.41	−7.07	−4.77	−3.16	−2.05	−1.31
	0.6	−81.99	−30.62	−16.87	−10.70	−7.13	−4.77	−3.13	−2.02	−1.28
	0.7	−100.28	−34.19	−17.89	−11.00	−7.19	−4.76	−3.11	−1.99	−1.24
	0.8	−118.58	−37.76	−18.91	−11.29	−7.26	−4.76	−3.09	−1.96	−1.20
	0.9	−136.88	−41.32	−19.93	−11.55	−7.32	−4.77	−3.07	−1.98	−1.23
	1.0	−155.18	−44.89	−20.95	−11.80	−7.39	−4.78	−3.05	−1.99	−1.25

		C_{b2} Values								
		Q_{b2}/Q_c								
A_{b1}/A_c	A_{b2}/A_c	0.1	0.2	0.3	0.4	0.5	0.6	0.7	0.8	0.9
0.2	0.2	−11.95	−1.89	−0.09	0.41	0.62	0.74	0.80	0.80	0.79
	0.3	−11.95	−1.89	−0.09	0.41	0.62	0.74	0.80	0.80	0.79
0.3	0.2	−8.24	−1.18	0.05	0.42	0.61	0.73	0.78	0.77	0.76
	0.3	−16.88	−2.92	−0.09	0.59	0.86	1.02	1.09	1.10	1.08
0.4	0.2	−6.95	−1.00	0.16	0.53	0.67	0.71	0.72	0.72	0.71
	0.3	−16.21	−2.90	−0.44	0.40	0.79	0.98	1.05	1.06	1.05
	0.4	−28.86	−6.22	−2.15	−0.57	0.19	0.55	0.72	0.79	0.85
0.5	0.2	−4.82	−0.01	0.56	0.72	0.82	0.89	0.92	0.90	0.89
	0.3	−12.27	−1.17	0.44	0.88	1.11	1.25	1.29	1.25	1.23
	0.4	−20.76	−2.93	−0.21	0.48	0.73	0.84	0.88	0.87	0.82
	0.5	−30.58	−5.23	−1.06	0.00	0.32	0.43	0.47	0.47	0.41
0.6	0.2	−3.68	0.07	0.77	0.98	1.06	1.08	1.08	1.06	1.04
	0.3	−9.06	−0.55	0.86	1.27	1.42	1.48	1.49	1.46	1.42
	0.4	−17.62	−2.12	0.06	0.60	0.83	0.95	0.98	0.95	0.91
	0.5	−28.00	−4.26	−0.99	−0.16	0.20	0.39	0.45	0.41	0.38
	0.6	−40.57	−7.86	−2.60	−0.99	−0.26	0.00	0.14	0.21	0.25
0.7	0.2	−5.44	−0.40	0.55	0.86	0.98	1.02	1.04	1.03	1.02
	0.3	−9.36	−0.77	0.73	1.20	1.39	1.47	1.49	1.47	1.44
	0.4	−19.57	−3.09	−0.44	0.36	0.71	0.89	0.97	0.98	0.97
	0.5	−31.88	−6.02	−1.90	−0.63	−0.05	0.26	0.40	0.44	0.46
	0.6	−46.44	−9.82	−3.47	−1.41	−0.48	−0.04	0.21	0.36	0.45
	0.7	−73.02	−16.68	−6.90	−3.29	−1.61	−0.80	−0.29	0.02	0.22
0.8	0.2	−7.21	−0.87	0.33	0.73	0.90	0.97	1.00	1.00	0.99
	0.3	−9.67	−0.99	0.60	1.13	1.36	1.45	1.49	1.48	1.46
	0.4	−21.53	−4.06	−0.93	0.11	0.59	0.83	0.96	1.01	1.03
	0.5	−35.77	−7.77	−2.82	−1.09	−0.29	0.13	0.35	0.48	0.55
	0.6	−52.32	−11.78	−4.34	−1.83	−0.70	−0.09	0.28	0.51	0.65
	0.7	−78.89	−18.64	−7.76	−3.71	−1.83	−0.85	−0.22	0.16	0.42
	0.8	−105.46	−25.49	−11.19	−5.59	−2.96	−1.60	−0.72	−0.18	0.19
0.9	0.2	−4.98	−0.34	0.54	0.85	0.97	1.03	1.04	1.03	1.01
	0.3	−9.97	−1.21	0.48	1.06	1.32	1.44	1.49	1.49	1.48
	0.4	−23.54	−4.98	−1.39	−0.12	0.47	0.78	0.95	1.04	1.09
	0.5	−40.14	−9.57	−3.69	−1.56	−0.55	−0.01	0.31	0.51	0.63
	0.6	−58.25	−14.28	−5.64	−2.53	−1.08	−0.30	0.18	0.49	0.70
	0.7	−84.09	−21.02	−8.91	−4.38	−2.22	−1.04	−0.31	0.15	0.46
	0.8	−109.92	−27.77	−12.18	−6.22	−3.35	−1.79	−0.81	−0.19	0.23
	0.9	−130.32	−35.19	−16.07	−8.70	−5.18	−3.19	−1.88	−1.08	−0.53
1.0	0.2	−2.75	0.19	0.76	0.96	1.05	1.08	1.08	1.06	1.04
	0.3	−10.28	−1.43	0.35	0.89	1.29	1.43	1.49	1.50	1.50
	0.4	−25.56	−5.89	1.86	−0.36	0.35	0.72	0.93	1.07	1.15
	0.5	−44.52	−11.37	−4.56	−2.02	−0.81	−0.14	0.27	0.54	0.72
	0.6	−64.19	−16.77	6.94	−3.24	1.47	−0.50	0.09	0.45	0.74
	0.7	−89.28	−23.41	−10.05	−5.05	−2.61	−1.24	−0.40	0.14	0.50
	0.8	−114.38	−30.04	−13.16	−6.86	−3.75	−1.97	−0.89	−0.20	0.27
	0.9	−134.78	−37.47	−17.06	−9.33	−5.57	−3.38	1.97	−1.09	−0.49
	1.0	−155.18	−44.89	−20.95	−11.80	−7.39	−4.78	−3.05	1.99	−1.25

SD1-2 Conical Bellmouth/Sudden Contraction, Plenum to Round, Supply Air Systems (*Continued*)

		C_o Values (*Concluded*)									
		θ									
A_o/A_1	L/D_o	0	10	20	30	45	60	90	120	150	180
0.40	0.025	0.34	0.32	0.31	0.29	0.28	0.27	0.28	0.30	0.32	0.34
	0.050	0.34	0.31	0.28	0.25	0.22	0.20	0.23	0.26	0.30	0.34
	0.075	0.34	0.29	0.24	0.20	0.17	0.16	0.19	0.24	0.29	0.34
	0.100	0.34	0.27	0.22	0.17	0.14	0.12	0.17	0.22	0.28	0.34
	0.150	0.34	0.25	0.18	0.14	0.11	0.10	0.15	0.21	0.27	0.34
	0.300	0.34	0.23	0.16	0.12	0.10	0.10	0.15	0.21	0.27	0.34
	0.600	0.34	0.18	0.12	0.09	0.08	0.08	0.14	0.20	0.27	0.34
0.60	0.025	0.25	0.24	0.23	0.22	0.20	0.20	0.21	0.22	0.23	0.25
	0.050	0.25	0.23	0.21	0.18	0.16	0.15	0.17	0.19	0.22	0.25
	0.075	0.25	0.21	0.18	0.15	0.13	0.12	0.14	0.18	0.21	0.25
	0.100	0.25	0.20	0.16	0.13	0.11	0.09	0.12	0.16	0.21	0.25
	0.150	0.25	0.19	0.14	0.10	0.08	0.08	0.11	0.16	0.20	0.25
	0.300	0.25	0.17	0.12	0.09	0.07	0.07	0.11	0.15	0.20	0.25
	0.600	0.25	0.14	0.09	0.07	0.06	0.06	0.10	0.15	0.20	0.25
0.80	0.025	0.15	0.14	0.13	0.13	0.12	0.12	0.12	0.13	0.14	0.15
	0.050	0.15	0.13	0.12	0.11	0.10	0.09	0.10	0.12	0.13	0.15
	0.075	0.15	0.13	0.10	0.09	0.08	0.07	0.08	0.10	0.13	0.15
	0.100	0.15	0.12	0.10	0.07	0.06	0.05	0.07	0.10	0.12	0.15
	0.150	0.15	0.11	0.08	0.06	0.05	0.04	0.07	0.09	0.12	0.15
	0.300	0.15	0.10	0.07	0.05	0.04	0.04	0.07	0.09	0.12	0.15
	0.600	0.15	0.08	0.05	0.04	0.03	0.04	0.06	0.09	0.12	0.15
0.90	0.025	0.09	0.08	0.08	0.08	0.07	0.07	0.07	0.08	0.08	0.09
	0.050	0.09	0.08	0.07	0.06	0.06	0.05	0.06	0.07	0.08	0.09
	0.075	0.09	0.07	0.06	0.05	0.04	0.04	0.05	0.06	0.08	0.09
	0.100	0.09	0.07	0.06	0.04	0.04	0.03	0.04	0.06	0.07	0.09
	0.150	0.09	0.07	0.05	0.04	0.03	0.03	0.04	0.06	0.07	0.09
	0.300	0.09	0.06	0.04	0.03	0.03	0.02	0.04	0.05	0.07	0.09
	0.600	0.09	0.05	0.03	0.02	0.02	0.02	0.04	0.05	0.07	0.09

SD2-6 Stackhead

D_e/D	0.3	0.4	0.5	0.6	0.7	0.8	0.9	1.0
C_o	129	41.02	16.80	8.10	4.37	2.56	1.60	1.00

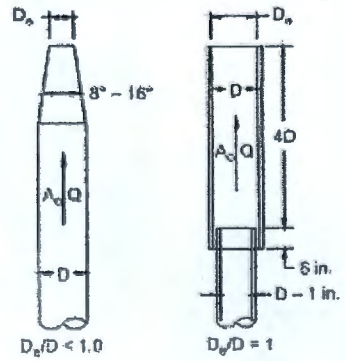

SD4-1 Transition, Round to Round, Supply Air Systems

	C_o Values									
	θ									
A_o/A_1	10	15	20	30	45	60	90	120	150	180
0.10	0.05	0.05	0.05	0.05	0.07	0.08	0.19	0.29	0.37	0.43
0.17	0.05	0.04	0.04	0.04	0.06	0.07	0.18	0.28	0.36	0.42
0.25	0.05	0.04	0.04	0.04	0.06	0.07	0.17	0.27	0.35	0.41
0.50	0.05	0.05	0.05	0.05	0.06	0.06	0.12	0.18	0.24	0.26
1.00	0.00	0.00	0.00	0.00	0.00	0.00	0.00	0.00	0.00	0.00
2.00	0.44	0.52	0.76	1.28	1.32	1.32	1.28	1.24	1.20	1.20
4.00	2.56	3.52	4.80	7.36	9.76	10.88	10.24	10.08	9.92	9.92
10.00	21.00	28.00	38.00	59.00	76.00	80.00	83.00	84.00	83.00	83.00
16.00	53.76	74.24	97.28	153.60	215.04	225.28	225.28	225.28	225.28	225.28

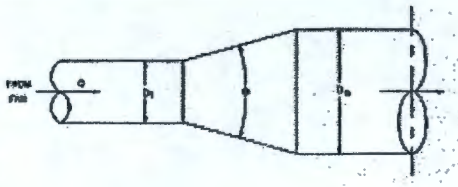

SD4-2 Transition, Rectangular to Round, Supply Air Systems

	C_o Values									
	θ									
A_o/A_1	10	15	20	30	45	60	90	120	150	180
0.10	0.05	0.05	0.05	0.05	0.07	0.08	0.19	0.29	0.37	0.43
0.17	0.05	0.05	0.04	0.04	0.06	0.07	0.18	0.28	0.36	0.42
0.25	0.06	0.05	0.05	0.04	0.06	0.07	0.17	0.27	0.35	0.41
0.50	0.06	0.07	0.07	0.05	0.06	0.06	0.12	0.18	0.24	0.26
1.00	0.00	0.00	0.00	0.00	0.00	0.00	0.00	0.00	0.00	0.00
2.00	0.60	0.84	1.00	1.20	1.32	1.32	1.32	1.28	1.24	1.20
4.00	4.00	5.76	7.20	8.32	9.28	9.92	10.24	10.24	10.24	10.24
10.00	30.00	50.00	53.00	64.00	75.00	84.00	89.00	91.00	91.00	88.00
16.00	76.80	138.24	135.68	166.40	197.12	225.28	243.20	250.88	250.88	238.08

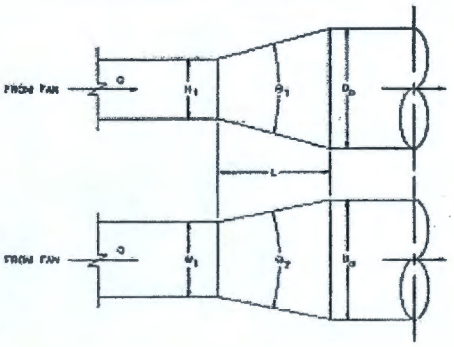

SD5-1 Wye, 45 Degree, Diverging

	C_b Values								
	Q_b/Q_c								
A_b/A_c	0.1	0.2	0.3	0.4	0.5	0.6	0.7	0.8	0.9
0.1	0.38	0.39	0.48						
0.2	2.25	0.38	0.31	0.39	0.46	0.48	0.45		
0.3	6.29	1.02	0.38	0.30	0.33	0.39	0.44	0.48	0.48
0.4	12.41	2.25	0.74	0.38	0.30	0.31	0.35	0.39	0.43
0.5	20.58	4.01	1.37	0.62	0.38	0.30	0.30	0.32	0.36
0.6	30.78	6.29	2.25	1.02	0.56	0.38	0.31	0.30	0.31
0.7	43.02	9.10	3.36	1.57	0.85	0.52	0.38	0.31	0.30
0.8	57.29	12.41	4.71	2.25	1.22	0.74	0.50	0.38	0.32
0.9	73.59	16.24	6.29	3.06	1.69	1.02	0.67	0.48	0.38

	C_s Values								
	Q_b/Q_c								
A_s/A_c	0.1	0.2	0.3	0.4	0.5	0.6	0.7	0.8	0.9
0.1	0.13	0.16							
0.2	0.20	0.13	0.15	0.16	0.28				
0.3	0.90	0.12	0.13	0.14	0.15	0.16	0.20		
0.4	2.88	0.20	0.14	0.13	0.14	0.15	0.15	0.16	0.34
0.5	6.25	0.37	0.17	0.14	0.13	0.14	0.14	0.15	0.15
0.6	11.88	0.90	0.20	0.13	0.14	0.13	0.14	0.14	0.15
0.7	18.62	1.71	0.33	0.18	0.16	0.14	0.13	0.15	0.14
0.8	26.88	2.88	0.50	0.20	0.15	0.14	0.13	0.13	0.14
0.9	36.45	4.46	0.98	0.30	0.19	0.16	0.15	0.14	0.13

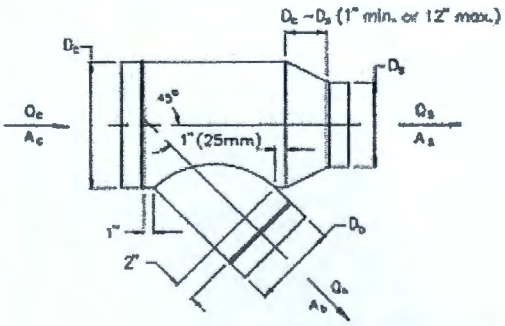

SD5-9 Tee, Diverging

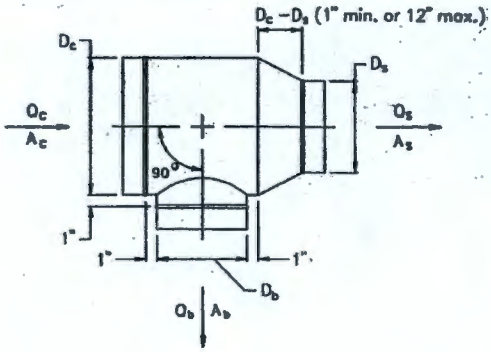

	C_b Values								
	Q_b/Q_c								
A_b/A_c	0.1	0.2	0.3	0.4	0.5	0.6	0.7	0.8	0.9
0.1	1.20	0.62	0.80	1.28	1.99	2.92	4.07	5.44	7.02
0.2	4.10	1.20	0.72	0.62	0.66	0.80	1.01	1.28	1.60
0.3	8.99	2.40	1.20	0.81	0.66	0.62	0.64	0.70	0.80
0.4	15.89	4.10	1.94	1.20	0.88	0.72	0.64	0.62	0.63
0.5	24.80	6.29	2.91	1.74	1.20	0.92	0.77	0.68	0.63
0.6	35.73	8.99	4.10	2.40	1.62	1.20	0.96	0.81	0.72
0.7	48.67	12.19	5.51	3.19	2.12	1.55	1.20	0.99	0.85
0.8	63.63	15.89	7.14	4.10	2.70	1.94	1.49	1.20	1.01
0.9	80.60	20.10	8.99	5.13	3.36	2.40	1.83	1.46	1.20

	C_s Values								
	Q_s/Q_c								
A_s/A_c	0.1	0.2	0.3	0.4	0.5	0.6	0.7	0.8	0.9
0.1	0.13	0.16							
0.2	0.20	0.13	0.15	0.16	0.28				
0.3	0.90	0.13	0.13	0.14	0.15	0.16	0.20		
0.4	2.88	0.20	0.14	0.13	0.14	0.15	0.15	0.16	0.34
0.5	6.25	0.37	0.17	0.14	0.13	0.14	0.14	0.15	0.15
0.6	11.88	0.90	0.20	0.13	0.14	0.13	0.14	0.14	0.15
0.7	18.62	1.71	0.33	0.18	0.16	0.14	0.13	0.15	0.14
0.8	26.88	2.88	0.50	0.20	0.15	0.14	0.13	0.13	0.14
0.9	36.45	4.46	0.90	0.30	0.19	0.16	0.15	0.14	0.13

SD5-10 Tee, Conical Branch Tapered into Body, Diverging

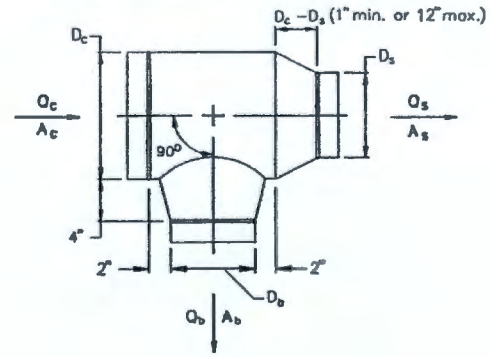

	C_b Values								
	Q_b/Q_c								
A_b/A_c	0.1	0.2	0.3	0.4	0.5	0.6	0.7	0.8	0.9
0.1	0.65	0.24							
0.2	2.98	0.65	0.33	0.24	0.18				
0.3	7.36	1.56	0.65	0.39	0.29	0.24	0.20		
0.4	13.78	2.98	1.20	0.65	0.43	0.33	0.27	0.24	0.21
0.5	22.24	4.92	1.98	1.04	0.65	0.47	0.36	0.30	0.26
0.6	32.73	7.36	2.98	1.56	0.96	0.65	0.49	0.39	0.33
0.7	45.26	10.32	4.21	2.21	1.34	0.90	0.65	0.51	0.42
0.8	59.82	13.78	5.67	2.98	1.80	1.20	0.86	0.65	0.52
0.9	76.41	17.75	7.36	3.88	2.35	1.56	1.11	0.83	0.65

	C_s Values								
	Q_s/Q_c								
A_s/A_c	0.1	0.2	0.3	0.4	0.5	0.6	0.7	0.8	0.9
0.1	0.13	0.16							
0.2	0.20	0.13	0.15	0.16	0.28				
0.3	0.90	0.13	0.13	0.14	0.15	0.16	0.20		
0.4	2.88	0.20	0.14	0.13	0.14	0.15	0.15	0.16	0.34
0.5	6.25	0.37	0.17	0.14	0.13	0.14	0.14	0.15	0.15
0.6	11.88	0.90	0.20	0.13	0.14	0.13	0.14	0.14	0.15
0.7	18.62	1.71	0.33	0.18	0.16	0.14	0.13	0.15	0.14
0.8	26.88	2.88	0.50	0.20	0.15	0.14	0.13	0.13	0.14
0.9	36.45	4.46	0.90	0.30	0.19	0.16	0.15	0.14	0.13

CR3-9 Elbow, Mitered, 90 Degree, Single-Thickness Vanes (1.5 in. Vane Spacing)

$C_o = 0.11$

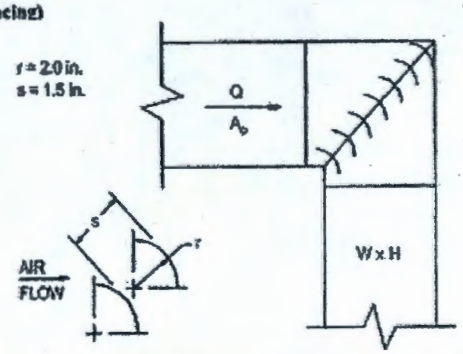

CR3-12 Elbow, Mitered, 90 Degree, Single-Thickness Vanes (3.25 in. Vane Spacing)

$C_o = 0.33$

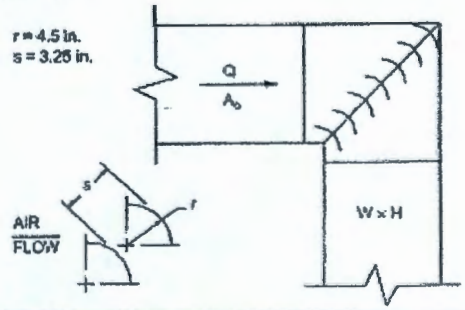

CR3-15 Elbow, Mitered, 90 Degree, Double-Thickness Vanes (2.125 in. Vane Spacing)

$C_o = 0.25$

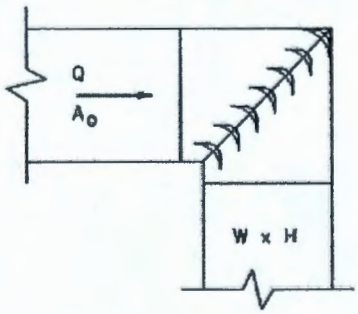

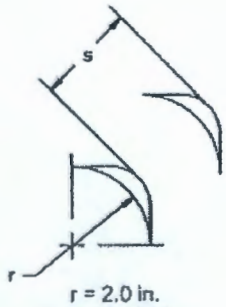

r = 2.0 in.
s = 2.125 in.

CR3-16 Elbow, Mitered, 90 Degree, Double-Thickness Vanes (3.25 in. Vane Spacing)

$C_o = 0.41$

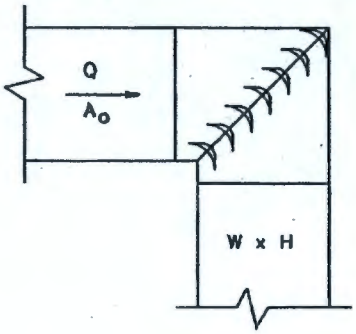

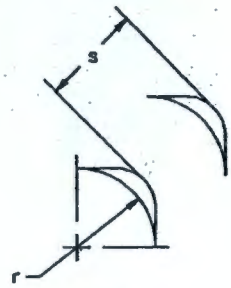

r = 4.5 in.
s = 3.25 in.

CR3-17 Elbow, Z-Shaped

	C_p Values													
	L/W													
H/W	0.0	0.4	0.6	0.8	1.0	1.2	1.4	1.6	1.8	2.0	4.0	8.0	10.0	100.0
0.25	0.00	0.68	0.99	1.77	2.89	3.97	4.41	4.60	4.64	4.60	3.39	3.03	2.70	2.53
0.50	0.00	0.66	0.96	1.72	2.81	3.86	4.29	4.47	4.52	4.47	3.30	2.94	2.62	2.46
0.75	0.00	0.64	0.94	1.67	2.74	3.75	4.17	4.35	4.39	4.35	3.20	2.86	2.55	2.39
1.00	0.00	0.62	0.90	1.61	2.63	3.61	4.01	4.18	4.22	4.18	3.08	2.75	2.45	2.30
1.50	0.00	0.59	0.86	1.53	2.50	3.43	3.81	3.97	4.01	3.97	2.93	2.61	2.33	2.19
2.00	0.00	0.56	0.81	1.45	2.37	3.25	3.61	3.76	3.80	3.76	2.77	2.48	2.21	2.07
3.00	0.00	0.51	0.75	1.34	2.18	3.00	3.33	3.47	3.50	3.47	2.56	2.28	2.03	1.91
4.00	0.00	0.48	0.70	1.26	2.05	2.82	3.13	3.26	3.29	3.26	2.40	2.15	1.91	1.79
6.00	0.00	0.45	0.65	1.16	1.89	2.60	2.89	3.01	3.04	3.01	2.22	1.98	1.76	1.66
8.00	0.00	0.43	0.63	1.13	1.84	2.53	2.81	2.93	2.95	2.93	2.16	1.93	1.72	1.61

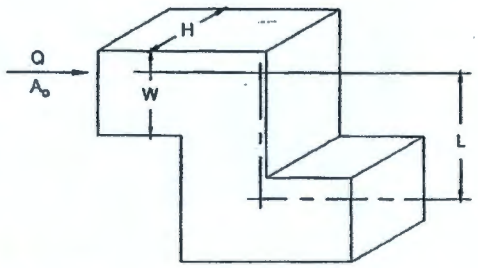

$C_o = K_r C_p$
where K_r = Reynolds number correction factor

Reynolds Number Correction Factor K_r									
Re/1000	10	20	30	40	60	80	100	140	500
K_r	1.40	1.26	1.19	1.14	1.09	1.06	1.04	1.00	1.00

CR6-1 Screen (Only)

	C_o Values												
	n												
A_1/A_o	0.30	0.35	0.40	0.45	0.50	0.55	0.60	0.65	0.70	0.75	0.80	0.90	1.00
0.2	155.00	102.50	75.00	55.00	41.25	31.50	24.25	18.75	14.50	11.00	8.00	3.50	0.00
0.3	68.89	45.56	33.33	24.44	18.33	14.00	10.78	8.33	6.44	4.89	3.56	1.56	0.00
0.4	38.75	25.63	18.75	13.75	10.31	7.88	6.06	4.69	3.63	2.75	2.00	0.88	0.00
0.5	24.80	16.40	12.00	8.80	6.60	5.04	3.88	3.00	2.32	1.76	1.28	0.56	0.00
0.6	17.22	11.39	8.33	6.11	4.58	3.50	2.69	2.08	1.61	1.22	0.89	0.39	0.00
0.7	12.65	8.37	6.12	4.49	3.37	2.57	1.98	1.53	1.18	0.90	0.65	0.29	0.00
0.8	9.69	6.40	4.69	3.44	2.58	1.97	1.52	1.17	0.91	0.69	0.50	0.22	0.00
0.9	7.65	5.06	3.70	2.72	2.04	1.56	1.20	0.93	0.72	0.54	0.40	0.17	0.00
1.0	6.20	4.10	3.00	2.20	1.65	1.26	0.97	0.75	0.58	0.44	0.32	0.14	0.00
1.2	4.31	2.85	2.08	1.53	1.15	0.88	0.67	0.52	0.40	0.31	0.22	0.10	0.00
1.4	3.16	2.09	1.53	1.12	0.84	0.64	0.49	0.38	0.30	0.22	0.16	0.07	0.00
1.6	2.42	1.60	1.17	0.86	0.64	0.49	0.38	0.29	0.23	0.17	0.13	0.05	0.00
1.8	1.91	1.27	0.93	0.68	0.51	0.39	0.30	0.23	0.18	0.14	0.10	0.04	0.00
2.0	1.55	1.03	0.75	0.55	0.41	0.32	0.24	0.19	0.15	0.11	0.08	0.04	0.00
2.5	0.99	0.66	0.48	0.35	0.26	0.20	0.16	0.12	0.09	0.07	0.05	0.02	0.00
3.0	0.69	0.46	0.33	0.24	0.18	0.14	0.11	0.08	0.06	0.05	0.04	0.02	0.00
4.0	0.39	0.26	0.19	0.14	0.10	0.08	0.06	0.05	0.04	0.03	0.02	0.01	0.00
6.0	0.17	0.11	0.08	0.06	0.05	0.04	0.03	0.02	0.02	0.01	0.01	0.00	0.00

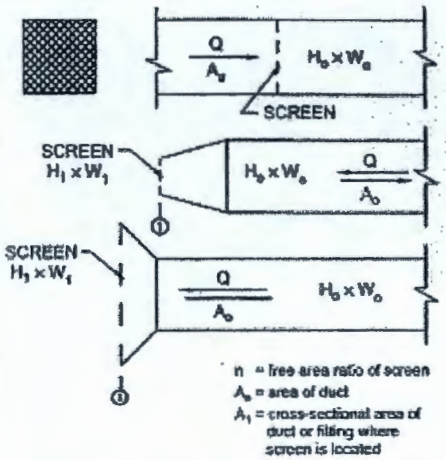

CR6-4 Obstruction, Smooth Cylinder in Rectangular Duct

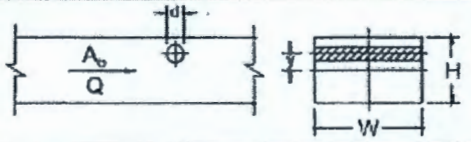

$dW/A_o < 0.3$
where
$S_m = dW$
$Re = f(d, V_o)$

		C_o Values				
		S_m/A_o				
y/H	Re/1000	0.00	0.05	0.10	0.15	0.20
0.00	0.1	0.00	0.10	0.21	0.35	0.47
	0.5	0.00	0.08	0.17	0.28	0.38
	200	0.00	0.08	0.17	0.28	0.38
	300	0.00	0.07	0.16	0.26	0.35
	400	0.00	0.05	0.11	0.19	0.25
	500	0.00	0.04	0.09	0.14	0.19
	600	0.00	0.02	0.05	0.07	0.10
	1000	0.00	0.02	0.05	0.08	0.11
0.05	0.1	0.00	0.10	0.21	0.34	0.46
	0.5	0.00	0.08	0.17	0.27	0.37
	200	0.00	0.08	0.17	0.27	0.37
	300	0.00	0.07	0.15	0.25	0.34
	400	0.00	0.05	0.11	0.18	0.24
	500	0.00	0.04	0.08	0.13	0.18
	600	0.00	0.02	0.04	0.07	0.10
	1000	0.00	0.02	0.05	0.08	0.11
0.10	0.1	0.00	0.09	0.20	0.32	0.44
	0.5	0.00	0.07	0.16	0.26	0.35
	200	0.00	0.07	0.16	0.26	0.35
	300	0.00	0.07	0.15	0.24	0.32
	400	0.00	0.05	0.11	0.17	0.23
	500	0.00	0.04	0.08	0.13	0.18
	600	0.00	0.02	0.04	0.07	0.09
	1000	0.00	0.02	0.05	0.08	0.10
0.15	0.1	0.00	0.09	0.19	0.31	0.42
	0.5	0.00	0.07	0.15	0.25	0.34
	200	0.00	0.07	0.15	0.25	0.34
	300	0.00	0.06	0.14	0.23	0.31
	400	0.00	0.05	0.10	0.17	0.22
	500	0.00	0.04	0.08	0.12	0.17
	600	0.00	0.02	0.04	0.07	0.09
	1000	0.00	0.02	0.04	0.07	0.10
0.20	0.1	0.00	0.08	0.18	0.29	0.40
	0.5	0.00	0.07	0.14	0.24	0.32
	200	0.00	0.07	0.14	0.24	0.32
	300	0.00	0.06	0.13	0.22	0.29

		C_o Values				
		S_m/A_o				
y/H	Re/1000	0.00	0.05	0.10	0.15	0.20
	400	0.00	0.04	0.10	0.16	0.21
	500	0.00	0.03	0.07	0.12	0.16
	600	0.00	0.02	0.04	0.06	0.09
	1000	0.00	0.02	0.04	0.07	0.09
0.25	0.1	0.00	0.08	0.17	0.28	0.38
	0.5	0.00	0.06	0.14	0.22	0.30
	200	0.00	0.06	0.14	0.22	0.30
	300	0.00	0.06	0.12	0.20	0.28
	400	0.00	0.04	0.09	0.15	0.20
	500	0.00	0.03	0.07	0.11	0.15
	600	0.00	0.02	0.04	0.06	0.08
	1000	0.00	0.02	0.04	0.06	0.09
0.30	0.1	0.00	0.07	0.16	0.26	0.35
	0.5	0.00	0.06	0.13	0.21	0.28
	200	0.00	0.06	0.13	0.21	0.28
	300	0.00	0.05	0.12	0.19	0.26
	400	0.00	0.04	0.08	0.14	0.19
	500	0.00	0.03	0.06	0.10	0.14
	600	0.00	0.02	0.03	0.05	0.07
	1000	0.00	0.02	0.04	0.06	0.08
0.35	0.1	0.00	0.07	0.14	0.23	0.32
	0.5	0.00	0.05	0.11	0.19	0.25
	200	0.00	0.05	0.11	0.19	0.25
	300	0.00	0.05	0.11	0.17	0.23
	400	0.00	0.04	0.08	0.12	0.17
	500	0.00	0.03	0.06	0.09	0.13
	600	0.00	0.01	0.03	0.05	0.07
	1000	0.00	0.02	0.03	0.05	0.07
0.40	0.1	0.00	0.06	0.13	0.20	0.28
	0.5	0.00	0.05	0.10	0.16	0.22
	200	0.00	0.05	0.10	0.16	0.22
	300	0.00	0.04	0.09	0.15	0.20
	400	0.00	0.03	0.07	0.11	0.15
	500	0.00	0.02	0.05	0.08	0.11
	600	0.00	0.01	0.03	0.04	0.06
	1000	0.00	0.01	0.03	0.05	0.06

CR9-1 Damper, Butterfly

	C_o Values									
	θ									
H/W	0	10	20	30	40	50	60	65	70	90
0.12	0.04	0.30	1.10	3.00	8.00	23.00	60.00	100.00	190.00	99999
0.25	0.08	0.33	1.18	3.30	9.00	26.00	70.00	128.00	210.00	99999
1.00	0.08	0.33	1.18	3.30	9.00	26.00	70.00	128.00	210.00	99999
2.00	0.13	0.35	1.25	3.60	10.00	29.00	80.00	155.00	230.00	99999

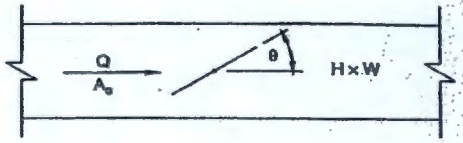

CR9-3 Damper, Parallel Blades

	C_o Values								
	θ								
L/R	0	10	20	30	40	50	60	70	80
0.3	0.52	0.79	1.49	2.20	4.95	8.73	14.15	32.11	122.06
0.4	0.52	0.84	1.56	2.25	5.03	9.00	16.00	37.73	156.58
0.5	0.52	0.88	1.62	2.35	5.11	9.52	18.88	44.79	187.85
0.6	0.52	0.92	1.66	2.45	5.20	9.77	21.75	53.78	288.89
0.8	0.52	0.96	1.69	2.55	5.30	10.03	22.80	65.46	295.22
1.0	0.52	1.00	1.76	2.66	5.40	10.53	23.84	73.23	361.00
1.5	0.52	1.08	1.83	2.78	5.44	11.21	27.56	97.41	495.31

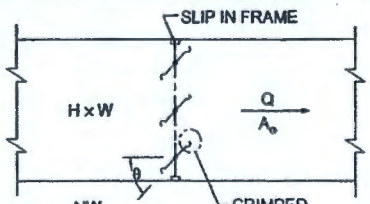

$$L/R = \frac{NW}{2(H + W)}$$

where
N = number of damper blades
W = duct dimension parallel to blade axis, in.
H = duct height, in.
L = sum of damper blade lengths, in.
R = perimeter of duct, in.

CR9-4 Damper, Opposed Blades

	C_o Values								
	θ								
L/R	0	10	20	30	40	50	60	70	80
0.3	0.52	0.79	1.91	3.77	8.55	19.46	70.12	295.21	807.23
0.4	0.52	0.85	2.07	4.61	10.42	26.73	92.90	346.25	926.34
0.5	0.52	0.93	2.25	5.44	12.29	33.99	118.91	393.36	1045.44
0.6	0.52	1.00	2.46	5.99	14.15	41.26	143.69	440.25	1163.09
0.8	0.52	1.08	2.66	6.96	18.18	56.47	193.92	520.27	1324.85
1.0	0.52	1.17	2.91	7.31	20.25	71.68	245.45	576.00	1521.00
1.5	0.52	1.38	3.16	9.51	27.56	107.41	361.00	717.05	1804.40

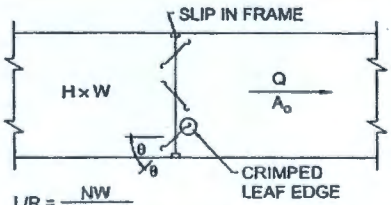

$$L/R = \frac{NW}{2(H + W)}$$

where
N = number of damper blades
W = duct dimension parallel to blade axis, in.
H = duct height, in.
L = sum of damper blade lengths, in.
R = perimeter of duct, in.

CR9-6 Fire Damper, Curtain Type, Type B

$C_o = 0.19$

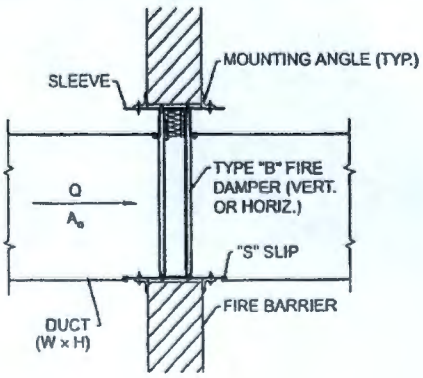

ER2-1 Bellmouth, Plenum to Round, Exhaust/Return Systems

	C_e Values												
	r/D_1												
A_o/A_1	0.00	0.01	0.02	0.03	0.04	0.05	0.06	0.08	0.10	0.12	0.16	0.20	10.00
1.5	0.22	0.20	0.15	0.14	0.12	0.10	0.09	0.07	0.05	0.04	0.03	0.01	0.01
2.0	0.13	0.11	0.08	0.08	0.07	0.06	0.05	0.04	0.03	0.02	0.02	0.01	0.01
2.5	0.08	0.07	0.05	0.05	0.04	0.04	0.03	0.02	0.02	0.01	0.01	0.00	0.00
3.0	0.06	0.05	0.04	0.03	0.03	0.02	0.02	0.02	0.01	0.01	0.01	0.00	0.00
4.0	0.03	0.03	0.02	0.02	0.02	0.01	0.01	0.01	0.01	0.01	0.00	0.00	0.00
8.0	0.01	0.01	0.01	0.00	0.00	0.00	0.00	0.00	0.00	0.00	0.00	0.00	0.00

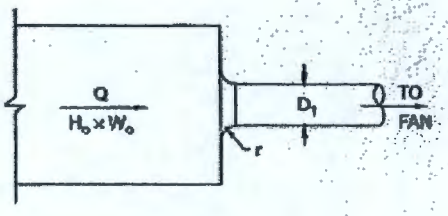

ER3-1 Elbow, 90 Degree, Variable Inlet/Outlet Areas, Exhaust/Return Systems

	C_e Values						
	W_1/W_o						
H/W_o	0.6	0.8	1.0	1.2	1.4	1.6	2.0
0.25	1.76	1.43	1.24	1.14	1.09	1.06	1.06
1.00	1.70	1.36	1.15	1.02	0.95	0.90	0.84
4.00	1.46	1.10	0.90	0.81	0.76	0.72	0.66
100.00	1.50	1.04	0.79	0.69	0.63	0.60	0.55

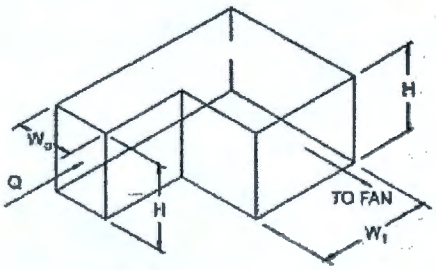

ER4-1 Transition, Rectangular, Two Sides Parallel, Symmetrical, Exhaust/Return Systems

	C_e Values									
	θ									
A_o/A_1	10	15	20	30	45	60	90	120	150	180
0.06	0.26	0.27	0.40	0.56	0.71	0.86	1.00	0.99	0.98	0.98
0.10	0.24	0.26	0.36	0.53	0.69	0.82	0.93	0.93	0.92	0.91
0.25	0.17	0.19	0.22	0.42	0.60	0.68	0.70	0.69	0.67	0.66
0.50	0.14	0.13	0.15	0.24	0.35	0.37	0.38	0.37	0.36	0.35
1.00	0.00	0.00	0.00	0.00	0.00	0.00	0.00	0.00	0.00	0.00
2.00	0.23	0.20	0.20	0.20	0.24	0.28	0.54	0.78	1.02	1.09
4.00	0.81	0.64	0.64	0.64	0.88	1.12	2.78	4.38	5.65	6.60
6.00	1.82	1.44	1.44	1.44	1.98	2.53	6.56	10.20	13.00	15.20
10.00	5.03	5.00	5.00	5.00	6.50	8.02	19.10	29.10	37.10	43.10

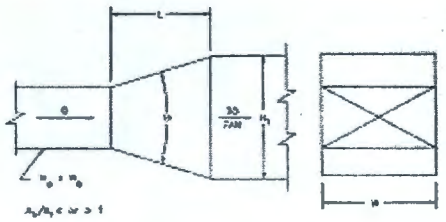

ER4-3 Transition, Rectangular to Round, Exhaust/Return Systems

	C_e Values									
	θ									
A_o/A_1	10	15	20	30	45	60	90	120	150	180
0.06	0.30	0.34	0.53	0.65	0.77	0.88	0.95	0.98	0.98	0.93
0.10	0.30	0.50	0.53	0.64	0.75	0.84	0.89	0.91	0.91	0.88
0.25	0.25	0.36	0.45	0.52	0.58	0.62	0.64	0.64	0.64	0.64
0.50	0.15	0.21	0.25	0.30	0.33	0.33	0.33	0.32	0.31	0.30
1.00	0.00	0.00	0.00	0.00	0.00	0.00	0.00	0.00	0.00	0.00
2.00	0.24	0.28	0.26	0.20	0.22	0.24	0.49	0.73	0.97	1.04
4.00	0.89	0.78	0.79	0.70	0.88	1.12	2.72	4.33	5.62	6.58
6.00	1.89	1.67	1.59	1.49	1.98	2.52	6.51	10.14	13.05	15.14
10.00	5.09	5.32	5.15	5.05	6.50	8.05	19.06	29.07	37.08	43.05

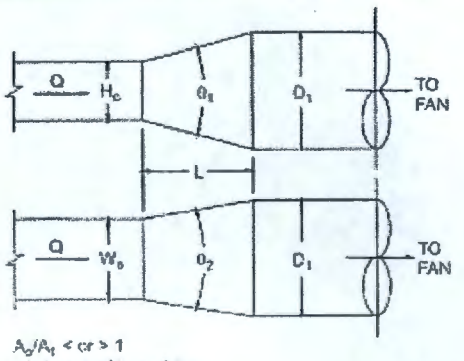

$A_o/A_1 < or > 1$
θ is larger of θ_1 and θ_2

SR2-3 Plain Diffuser (Two Sides Parallel), Free Discharge

		C_o Values								
		θ								
A_1/A_o	Re/1000	8	10	14	20	30	45	60	90	120
1	50	0.00	0.00	0.00	0.00	0.00	0.00	0.00	0.00	0.00
	100	0.00	0.00	0.00	0.00	0.00	0.00	0.00	0.00	0.00
	200	0.00	0.00	0.00	0.00	0.00	0.00	0.00	0.00	0.00
	400	0.00	0.00	0.00	0.00	0.00	0.00	0.00	0.00	0.00
	2000	0.00	0.00	0.00	0.00	0.00	0.00	0.00	0.00	0.00
2	50	0.50	0.51	0.56	0.63	0.80	0.96	1.04	1.09	1.09
	100	0.48	0.50	0.56	0.63	0.80	0.96	1.04	1.09	1.09
	200	0.44	0.47	0.53	0.63	0.74	0.93	1.02	1.08	1.08
	400	0.40	0.42	0.50	0.62	0.74	0.93	1.02	1.08	1.08
	2000	0.40	0.42	0.50	0.62	0.74	0.93	1.02	1.08	1.08
4	50	0.34	0.38	0.48	0.63	0.76	0.91	1.03	1.07	1.07
	100	0.31	0.36	0.45	0.59	0.72	0.88	1.02	1.07	1.07
	200	0.26	0.31	0.41	0.53	0.67	0.83	0.96	1.06	1.06
	400	0.22	0.27	0.39	0.53	0.67	0.83	0.96	1.06	1.06
	2000	0.22	0.27	0.39	0.53	0.67	0.83	0.96	1.06	1.06
6	50	0.32	0.34	0.41	0.56	0.70	0.84	0.96	1.08	1.08
	100	0.27	0.30	0.41	0.56	0.70	0.84	0.96	1.08	1.08
	200	0.24	0.27	0.36	0.52	0.67	0.81	0.94	1.06	1.06
	400	0.20	0.24	0.36	0.52	0.67	0.81	0.94	1.06	1.06
	2000	0.18	0.24	0.34	0.50	0.67	0.81	0.94	1.05	1.05

SR2-5 Pyramidal Diffuser, Free Discharge

		C_o Values								
		θ								
A_1/A_o	Re/1000	8	10	14	20	30	45	60	90	120
1	50	0.00	0.00	0.00	0.00	0.00	0.00	0.00	0.00	0.00
	100	0.00	0.00	0.00	0.00	0.00	0.00	0.00	0.00	0.00
	200	0.00	0.00	0.00	0.00	0.00	0.00	0.00	0.00	0.00
	400	0.00	0.00	0.00	0.00	0.00	0.00	0.00	0.00	0.00
	2000	0.00	0.00	0.00	0.00	0.00	0.00	0.00	0.00	0.00
2	50	0.65	0.68	0.74	0.82	0.92	1.05	1.10	1.08	1.08
	100	0.61	0.66	0.73	0.81	0.90	1.04	1.09	1.08	1.08
	200	0.57	0.61	0.70	0.79	0.89	1.04	1.09	1.08	1.08
	400	0.50	0.56	0.64	0.76	0.88	1.02	1.07	1.08	1.08
	2000	0.50	0.56	0.64	0.76	0.88	1.02	1.07	1.08	1.08
4	50	0.53	0.60	0.69	0.78	0.90	1.02	1.07	1.09	1.09
	100	0.49	0.55	0.66	0.78	0.90	1.02	1.07	1.09	1.09
	200	0.42	0.50	0.62	0.74	0.87	1.00	1.06	1.08	1.08
	400	0.36	0.44	0.56	0.70	0.84	0.99	1.06	1.08	1.08
	2000	0.36	0.44	0.56	0.70	0.84	0.99	1.06	1.08	1.08
6	50	0.50	0.57	0.66	0.77	0.91	1.02	1.07	1.08	1.08
	100	0.47	0.54	0.63	0.76	0.98	1.02	1.07	1.08	1.08
	200	0.42	0.48	0.60	0.73	0.88	1.00	1.06	1.08	1.08
	400	0.34	0.44	0.56	0.73	0.86	0.98	1.06	1.08	1.08
	2000	0.34	0.44	0.56	0.73	0.86	0.98	1.06	1.08	1.08
10	50	0.45	0.53	0.64	0.74	0.85	0.97	1.10	1.12	1.12
	100	0.40	0.48	0.62	0.73	0.85	0.97	1.10	1.12	1.12
	200	0.34	0.44	0.56	0.69	0.82	0.95	1.10	1.11	1.11
	400	0.28	0.40	0.55	0.67	0.80	0.93	1.09	1.11	1.11
	2000	0.28	0.40	0.55	0.67	0.80	0.93	1.09	1.11	1.11

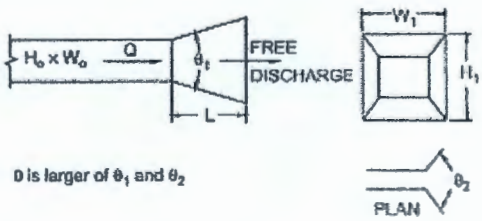

SR2-6 Pyramidal Diffuser, with Wall

L/D_o	0.5	1.0	2.0	3.0	4.0	5.0	6.0	8.0	10.0	12.0	14.0
C_o	0.49	0.40	0.30	0.26	0.23	0.21	0.19	0.17	0.16	0.15	0.14
θ	26	19	13	11	9	8	7	6	6	5	5

θ is the optimum angle

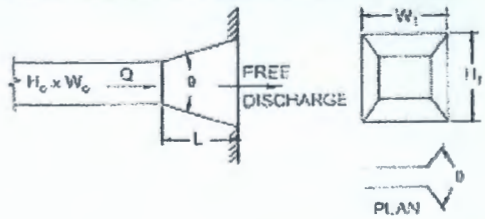

SR3-1 Elbow, 90 Degree, Variable Inlet/Outlet Areas, Supply Air Systems

	C_o Values						
	W_o/W_1						
H/W_1	0.6	0.8	1.0	1.2	1.4	1.6	2.0
0.25	0.63	0.92	1.24	1.64	2.14	2.71	4.24
1.00	0.61	0.87	1.15	1.47	1.86	2.30	3.36
4.00	0.53	0.70	0.90	1.17	1.49	1.84	2.64
100.00	0.54	0.67	0.79	0.99	1.23	1.54	2.20

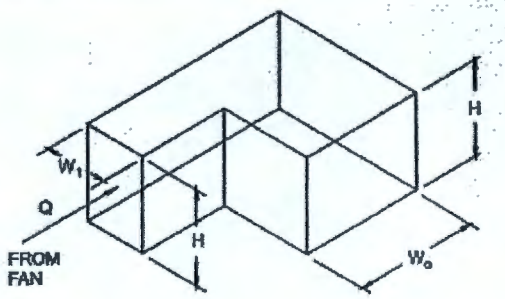

SR4-1 Transition, Rectangular, Two Sides Parallel, Symmetrical, Supply Air Systems

	C_o Values									
	θ									
A_o/A_1	10	15	20	30	45	60	90	120	150	180
0.10	0.05	0.05	0.05	0.05	0.07	0.08	0.19	0.29	0.37	0.43
0.17	0.05	0.04	0.04	0.04	0.05	0.07	0.18	0.28	0.36	0.42
0.25	0.05	0.04	0.04	0.04	0.06	0.07	0.17	0.27	0.35	0.41
0.50	0.06	0.05	0.05	0.05	0.06	0.07	0.14	0.20	0.26	0.27
1.00	0.00	0.00	0.00	0.00	0.00	0.00	0.00	0.00	0.00	1.00
2.00	0.56	0.52	0.60	0.96	1.40	1.48	1.52	1.48	1.44	1.40
4.00	2.72	3.04	3.52	6.72	9.60	10.88	11.20	11.04	10.72	10.56
10.00	24.00	26.00	36.00	53.00	69.00	82.00	93.00	93.00	92.00	91.00
16.00	66.56	69.12	102.40	143.36	181.76	220.16	256.00	253.44	250.88	250.88

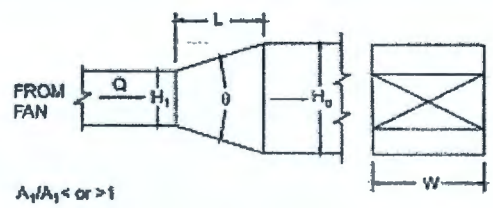

SR4-3 Transition, Round to Rectangular, Supply Air Systems

	C_o Values									
	θ									
A_o/A_1	30	15	20	30	45	60	90	120	150	180
0.10	0.05	0.05	0.05	0.05	0.07	0.08	0.19	0.29	0.37	0.43
0.17	0.05	0.05	0.05	0.04	0.06	0.07	0.18	0.28	0.36	0.42
0.25	0.06	0.05	0.05	0.04	0.06	0.07	0.17	0.27	0.35	0.41
0.50	0.06	0.07	0.07	0.05	0.06	0.06	0.12	0.18	0.24	0.26
1.00	0.00	0.00	0.00	0.00	0.00	0.00	0.00	0.00	0.00	0.00
2.00	0.60	0.84	1.00	1.20	1.32	1.32	1.32	1.28	1.24	1.20
4.00	4.00	5.76	7.20	8.32	9.28	9.92	10.24	10.24	10.24	10.24
10.00	30.00	50.00	53.00	64.00	75.00	84.00	89.00	91.00	91.00	88.00
16.00	76.80	138.24	135.68	166.40	197.12	225.28	243.20	250.88	250.88	238.08

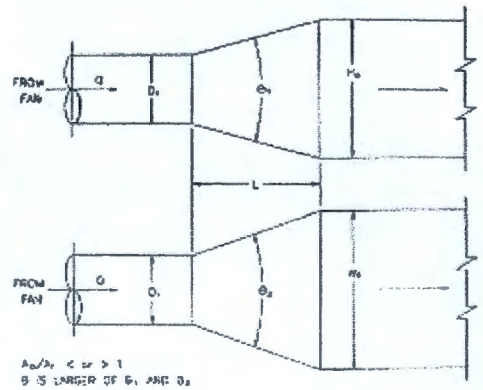

SR5-1 Smooth Wye of Type $A_s + A_b \geq A_c$, Branch 90° to Main, Diverging

		C_b Values								
		Q_b/Q_c								
A_c/A_s	A_b/A_c	0.1	0.2	0.3	0.4	0.5	0.6	0.7	0.8	0.9
0.50	0.25	3.44	0.70	0.30	0.20	0.17	0.16	0.16	0.17	0.18
	0.50	11.00	2.37	1.06	0.64	0.52	0.47	0.47	0.47	0.48
	1.00	60.00	13.00	4.78	2.06	0.96	0.47	0.31	0.27	0.26
0.75	0.25	2.19	0.55	0.35	0.31	0.33	0.35	0.36	0.37	0.39
	0.50	13.00	2.50	0.89	0.47	0.34	0.31	0.32	0.36	0.43
	1.00	70.00	15.00	5.67	2.62	1.36	0.78	0.53	0.41	0.36
1.00	0.25	3.44	0.78	0.42	0.33	0.30	0.31	0.40	0.42	0.46
	0.50	15.50	3.00	1.11	0.62	0.48	0.42	0.40	0.42	0.46
	1.00	67.00	13.75	5.11	2.31	1.28	0.81	0.59	0.47	0.46

		C_s Values								
		Q_s/Q_c								
A_s/A_c	A_b/A_c	0.1	0.2	0.3	0.4	0.5	0.6	0.7	0.8	0.9
0.50	0.25	8.75	1.62	0.50	0.17	0.05	0.00	−0.02	−0.02	0.00
	0.50	7.50	1.12	0.25	0.06	0.05	0.09	0.14	0.19	0.22
	1.00	5.00	0.62	0.17	0.08	0.08	0.09	0.12	0.15	0.19
0.75	0.25	19.13	3.38	1.00	0.28	0.05	−0.02	−0.02	0.00	0.06
	0.50	20.81	3.23	0.75	0.14	−0.02	−0.05	−0.05	−0.02	0.03
	1.00	16.88	2.81	0.63	0.11	−0.02	−0.05	0.01	0.00	0.07
1.00	0.25	46.00	9.50	3.22	1.31	0.52	0.14	−0.02	−0.05	−0.01
	0.50	35.00	6.75	2.11	0.75	0.24	0.00	−0.10	−0.09	−0.04
	1.00	38.00	7.50	2.44	0.81	0.24	−0.03	−0.08	−0.06	−0.02

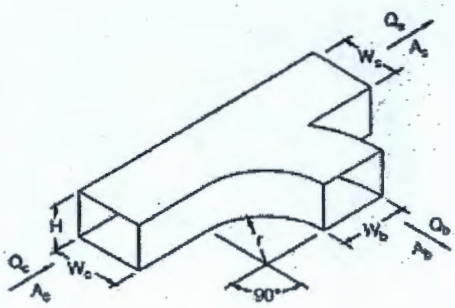

$nW_b = 1.0$
$A_s = A_b \geq A_c$

SR5-3 Wye of the Type $A_s + A_b > A_c$, $A_s = A_c$, 45 Degree, Diverging

	C_b Values								
	Q_b/Q_c								
A_b/A_c	0.1	0.2	0.3	0.4	0.5	0.6	0.7	0.8	0.9
0.1	0.60	0.52	0.57	0.58	0.64	0.67	0.70	0.71	0.73
0.2	2.24	0.56	0.44	0.45	0.51	0.54	0.58	0.60	0.62
0.3	5.94	1.08	0.52	0.41	0.44	0.46	0.49	0.52	0.54
0.4	10.56	1.88	0.71	0.43	0.35	0.31	0.31	0.32	0.34
0.5	17.75	3.25	1.14	0.59	0.40	0.31	0.30	0.30	0.31
0.6	26.64	5.04	1.76	0.83	0.50	0.36	0.32	0.30	0.30
0.7	37.73	7.23	2.56	1.16	0.67	0.44	0.35	0.31	0.30
0.8	49.92	9.92	3.48	1.60	0.87	0.55	0.42	0.35	0.32

Q_s/Q_c	0.1	0.2	0.3	0.4	0.5	0.6	0.8	1.0
C_s	32.00	6.50	2.22	0.87	0.40	0.17	0.03	0.00

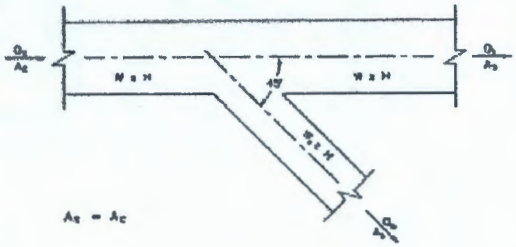

$A_s = A_c$

SR5-5 Tee of the Type $A_s + A_b > A_c$, $A_s = A_c$ Diverging

	C_b Values								
	Q_b/Q_c								
A_b/A_c	0.1	0.2	0.3	0.4	0.5	0.6	0.7	0.8	0.9
0.1	2.06	1.20	0.99	0.87	0.88	0.87	0.87	0.86	0.86
0.2	5.16	1.92	1.28	1.03	0.99	0.94	0.92	0.90	0.89
0.3	10.26	3.13	1.78	1.28	1.16	1.06	1.01	0.97	0.94
0.4	15.84	4.36	2.24	1.48	1.11	0.88	0.80	0.75	0.72
0.5	24.25	6.31	3.03	1.89	1.35	1.03	0.91	0.84	0.78
0.6	34.56	8.73	4.04	2.41	1.64	1.22	1.04	0.94	0.87
0.7	46.55	11.51	5.17	3.00	2.00	1.44	1.20	1.06	0.96
0.8	60.30	14.72	6.54	3.72	2.41	1.66	1.38	1.20	1.07

Q_s/Q_c	0.1	0.2	0.3	0.4	0.5	0.6	0.8	1.0
C_s	32.00	6.50	2.22	0.87	0.40	0.17	0.03	0.00

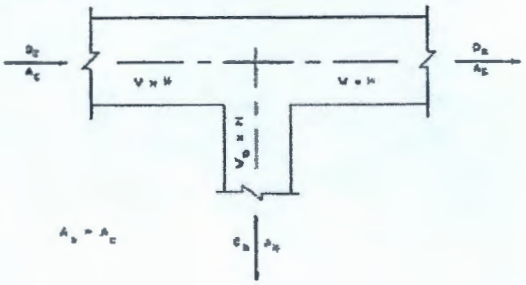

$A_b = A_c$

Tel:
Fax:

ASHRAE DUCT FITTING DATABASE
Version 2.5.0

Thursday, February 23, 2006

(CR6-3) Orifice, Thick-Edged
(Idelchik 1986, Diagram 4-15)

INPUTS			**OUTPUTS**	
Height (Ho, in.)	5.3		Velocity (Vo, fpm)	2054
Width (Wo, in.)	5.3		Vel Pres at Vo (Pv, in. wg)	0.26
Height (H1, in.)	4.9		Loss Coefficient (Co)	0.27
Width (W1, in.)	4.9		Pressure Loss (in. wg)	0.07
Length (L, in.)	24.0			
Flow Rate (Q, cfm)	400			

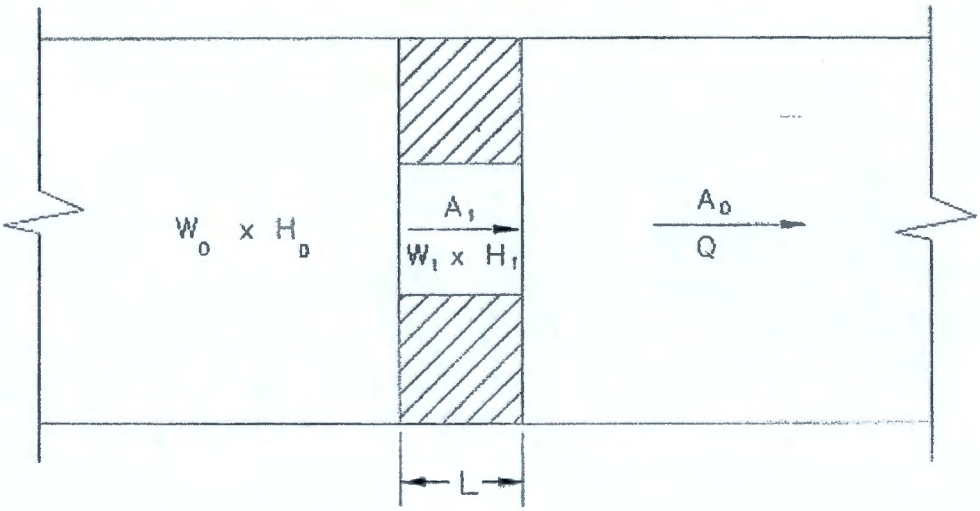

$L/Dh > 0.015$

$Dh = 2A_1/(H_1 + W_1)$

DMJM technology

CALCULATION DESIGN VERIFICATION CHECKLIST

Task/Project #: Demonstration Bulk Vitrification System A77977

Calculation Number: 145579-D-CA-056	Revision 1 3/27/06	Safety Related? Y-SS

Reviewer/Checker (print name): K. J. McCracken
Reviewer performed or supervised subject calculation.
__X__NO ____YES Justification Attachment __-_____, _____ pages
Alternate Verification method approved _N/A_____ Method _Calculation Independently Checked_

Date 03/27/06

ITEM (S) CHECKED	ACCEPT Y/N	OBJECTIVE EVIDENCE SHEETS	INITIAL/DATE
1. Cover forms properly completed.	Y	Pg 1-12	3/27/06
2. Calculation Sheet headers complete with calc. no., rev., etc.	Y	Pg 1-12	3/27/06
3. Calculation Sheet contents complete per format.	Y	Pg 1-12	3/27/06
4. Listed attachments included.	Y	Pg 1	3/27/06
5. Calculation Objective clearly described.	Y	Pg 3 Section 1.1 and 1.2	3/27/06
6. Criteria are suitable and properly referenced to task-specific documents.	N/A	Calculation determines head loss and thermal effects—no criteria necessary	3/27/06
7. Assumptions and data described and attached or referenced to task documents.	Y	Pg 5 Section 2.2 and Attachments 4 & 5	3/27/06
8. Calculation method identified and appropriate for the design activity.	Y	Pg 8 Section 4.0	3/27/06
9. Calculation results reasonable and correctly described in Results & Conclusions.	Y	Pg 9-10 Section 5.0	3/27/06
10. Computer Program identified with version and revision.	Y	Pg 8 Section 4.0 last Paragraph	3/27/06
11. Computer Program references method used, etc.	Y	Pg 8 Section 4.0 2nd Paragraph	3/27/06
12. Computer input/output provided.	Y	Attachment 2	3/27/06
13. Computer runs traceable to calculation.	Y	Section 6.0	3/27/06
14. Computer input data within permissible design input range.	Y	Attachment 2	3/27/06
15. Computer Program validation/verification addressed.	Y	Pg 9 Section 4.0 last Paragraph	3/27/06

REMARKS
None

K. J. McCracken _____ Date 3/27/06
Reviewer/Checker Print Name & Signature

J. J. Irwin _____ Date 3/27/06
Originator Print Name & Signature

EP 3.9-4F October 2003

CH2M HILL SPREADSHEET VERIFICATION AND RELEASE FORM

1. SVF 1129 Rev. 0

1a. No. Pages: 2

2. Spreadsheet Owner, Organization, MSIN, & Phone No.: John J. Irwin, 375-7866

3. Spreadsheet File Name and Version No.: M:\Demonstration Bulk VIT\Fiscal Year 2006 Work\Calculations\OGTS Bypass Thermal Hydraulics Analysis\Work Files\Bypass Duct Elements 8 inch.xls 3/24/06

4. Function and Purpose of Spreadsheet: Calculate Thermal Hydraulic K-Losses and Heat Transfer Coeffiecents for DBVS OGTS Bypass System

5. Spreadsheet Category: ☐ Critical Spreadsheet ☑ Non-Critical Spreadsheet ☐ Multiple-Use Spreadsheet

6. Associated Document(s): Calculation 145579-D-CA-056 | 6a. Attachments: NA

7. Scope of Verification: ☑ Input Data ☑ Formulas ☐ Changes Only ☐ Macros/Add-ins ☐ Other

8. Scope Description: Scope of verification was limited to 15% of the input fields to the calculation and the External Convection and Thermal Radiation Coefficents

9. Verification Checklist:

		Yes	No	NA
a.	All unique formulas in spreadsheet have been checked that they correctly perform their intended function.	☑	☐	☐
b.	Non-unique formulas have been reviewed to confirm that they have been correctly copied.	☑	☐	☐
c.	All values are correctly labeled with units.	☑	☐	☐
d.	Formulas were checked for dimensional consistency.	☑	☐	☐
e.	Spreadsheet contains no hidden pages or formulas/data on hidden ranges/pages have been verified.	☑	☐	☐
f.	Links to external workbooks have been verified.	☐	☐	☑
g.	Input data used in the spreadsheet are appropriate and have been checked against their original source.	☑	☐	☐
h.	Spreadsheet has been reviewed for common errors. See TFC-ENG-DESIGN-C-32, Attachment C for guidance.	☑	☐	☐
i.	Assumptions in the spreadsheet are reasonable and supportable.	☑	☐	☐
j.	Macros contained in the spreadsheet have been verified for correct operation.	☐	☐	☑
k.	Add-in software is commercially available software, suitable for its intended purpose, and is a production version of the software (e.g. not be a "beta" or test version).	☐	☐	☑
l.	Spreadsheet contains a documentation sheet with spreadsheet purpose, methodology, assumptions, and reference to current SVF No.	☑	☐	☐
m.	A change log is included for multiple-use or revised single-use spreadsheets and all changes in the log have been verified.	☐	☐	☑
n.	If the spreadsheet is a critical spreadsheet, a published spreadsheet description document has been produced that provides a description of the spreadsheet purpose, assumptions, methodology.	☐	☐	☑
o.	Spreadsheet has been protected against inadvertent change per TFC-ENG-DESIGN-C-32, Section 4.6.3.	☑	☐	☐
p.	All errors identified during verification have been corrected and the spreadsheet is suitable for its intended purpose.	☑	☐	☐

10. Comments: (Explanation for any items marked "No" must be provided)

See attached pages for verifcation evidence (32 pages attached)

11. Approvals/Clearance:	Printed Name:	Signature:	Date:	Release Stamp
Spreadsheet Owner:	John J. Irwin	John J. Irwin	3/27/06	
Spreadsheet Verifier:	Kurt J. McCracken	[illegible]	3/27/06	
Owner's Manager:	Ja-Kael Luey	Ja-Kael Luey	3/27/06	
LCCB Approval (if required):				
Clearance Review:				

When completed, submit the original hard copy signed SVF form together with a protected electronic copy of the spreadsheet (in *.xls or *.xlt format) to the Document Control Service Center for records retention and release. See Form Instructions for how to transmit spreadsheet electronic file.

CH2M HILL SPREADSHEET VERIFICATION AND RELEASE FORM	1. SVF 1129 Rev. 0
	1a. No. Pages: 2

Cleared for Public Release? ☐Yes ☐No	Restricted Use? ☐Yes ☐No	Restriction Type:

When completed, submit the original hard copy signed SVF form together with a protected electronic copy of the spreadsheet (in *.xls or *.xlt format) to the Document Control Service Center for records retention and release. See Form Instructions for how to transmit spreadsheet electronic file.

Calculation No 145579-D-CA-056~~145579-D-CA-056~~	**ORIGINATOR**: John Irwin 02-22-2006~~02-22-2006~~
Rev. No. : 0	
Calculation Title : DBVS OGTS Bypass System Thermal Hydraulics Analysis	**CHECKER:** Jack McConwell

6.0 Calculations and Analyses

The AFT Arrow model, as shown in the figure, considers the process loop as follows:

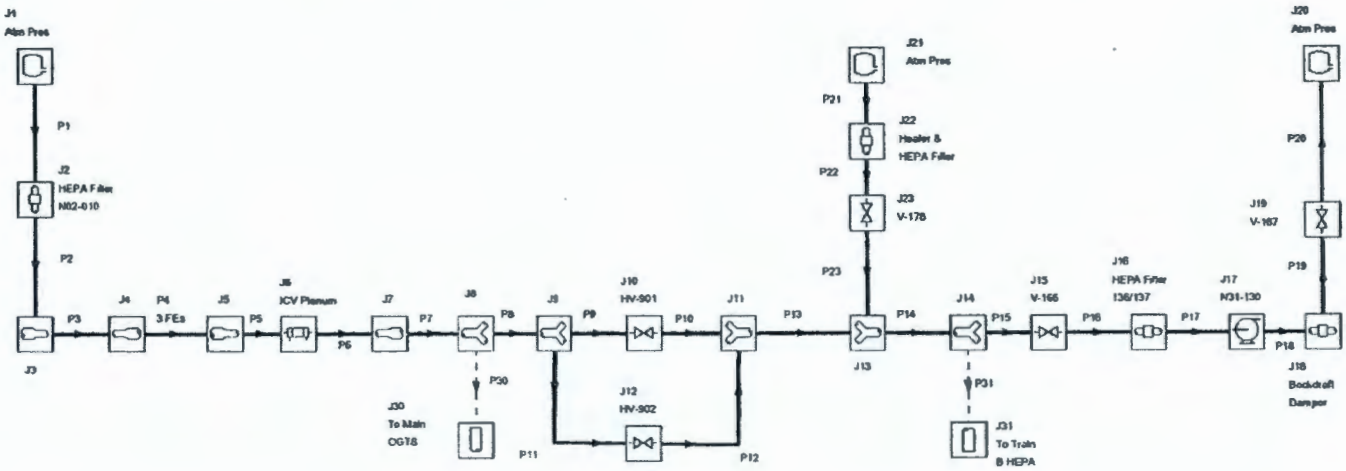

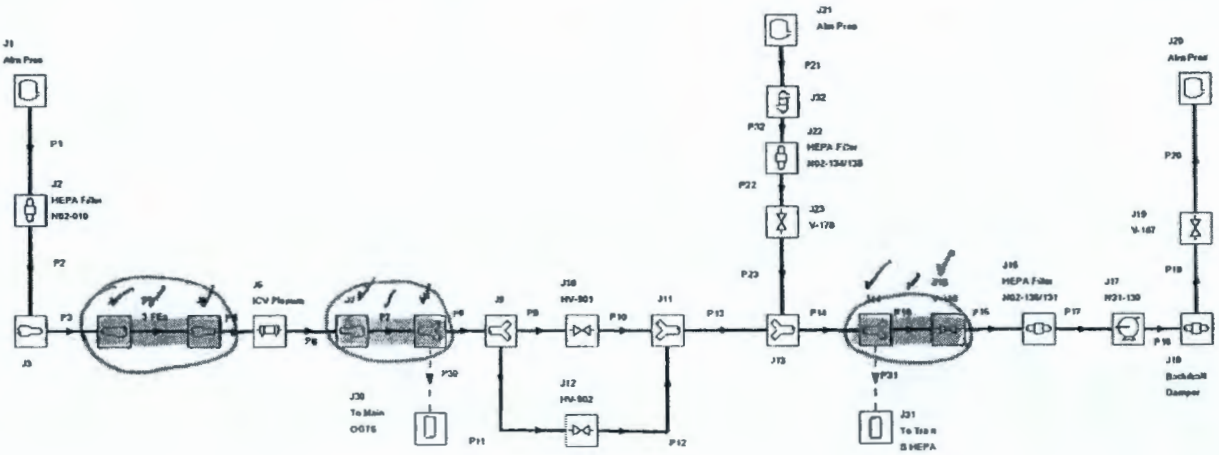

The drawings used to develop the AFT physical model are contained in Attachment 1. The AFT Arrow Input and Output Files for the various cases analyzed are in Attachment 2. Attachment 3 contains the flow coefficient and physical configuration

AFT Arrow 3.0 [redacted]
DMJMH+N

(1 of 6)

2/17/2006 12:42 PM

AFT Arrow Model, OGTS Bypass System T-H[redacted]

Title: AFT Arrow Model, OGTS Bypass System T-H Model Case 2
Input File: C:\AFT Products\AFT Arrow\Bypass Flow 8 inch Pipe Rev B.aro

Number Of Pipes= 25
Number Of Junctions= 25

Length March Solution Method with Mach Number Limits
Length Step Size= 12 inches
Mach Number Increment= 0.01
Pressure Tolerance= 0.0001 relative change
Mass Flow Rate Tolerance= 0.0001 relative change
Enthalpy Tolerance= 0.0001 relative change
Flow Relaxation= (Automatic)
Pressure Relaxation= (Automatic)
Resistance Relaxation= (Automatic)

Fluid Database: AFT Standard
Fluid: Air
Max Fluid Temperature Data= 1000 deg. K
Min Fluid Temperature Data= 200 deg. K
Molecular Weight =28.97 amu
Gas Constant =0.06855 Btu/lbm-R
Critical Pressure =37.25 atm
Critical Temperature =132.41 deg. K
Acentric Factor =0.021
Equation of State= Redlich-Kwong
Enthalpy Model= Generalized
Specific Heat Ratio Accuracy = High
Atmospheric Pressure= 14.5 psia
Gravitational Acceleration= 1 g
Standard Pressure= 14.696 psia
Standard Temperature= 60 deg. F
Turbulent Flow Above Reynolds Number= 4000
Laminar Flow Below Reynolds Number= 2300

Pipe Input Table

Pipe	Name	Pipe Defined	Length	Length Units	Hydraulic Diameter	Hydraulic Diam. Units	Friction Data Set	Roughness	Roughness Units	Losses (K)	Initial Flow
1	Pipe	Yes	64	inches	6.065	inches	Unspecified	0.00015	feet	2.93	?
2	Pipe	Yes	104	inches	6.065	inches	Unspecified	0.00015	feet	0.21	
3	Pipe	Yes	163	inches	4.026	inches	Unspecified	0.00015	feet	1.635	
4	3 FEs	Yes	62	inches	6.065	inches	Unspecified	0.00015	feet	0.24	
5	Pipe	Yes	22	inches	4.025	inches	Unspecified	0.00015	feet	0.32	
6	Pipe	Yes	72	inches	6.065	inches	Unspecified	0.00015	feet	0.15	
7	Pipe	Yes	141.5	inches	5.047	inches	Unspecified	0.00015	feet	0.46	
8	Pipe	Yes	6	inches	6.065	inches	Unspecified	0.00015	feet	0.14	
9	Pipe	Yes	10.5	inches	6.065	inches	Unspecified	0.00015	feet	0	
10	Pipe	Yes	8	inches	6.065	inches	Unspecified	0.00015	feet	0.05	
11	Pipe	Yes	6	inches	6.065	inches	Unspecified	0.00015	feet	0.05	
12	Pipe	Yes	12	inches	6.065	inches	Unspecified	0.00015	feet	1.309545	0.05 PER SPREAD SHEET
13	Pipe	Yes	251	inches	8.329	inches	Unspecified	0.00015	feet	0.14	0.39
14	Pipe	Yes	1969	inches	8.329	inches	Unspecified	0.00015	feet	0.77	
15	Pipe	Yes	277.5	inches	8.329	inches	Unspecified	0.00015	feet	1.1	0.22
16	Pipe	Yes	18	inches	8.329	inches	Unspecified	0.00015	feet	0.43	PER
17	Pipe	Yes	12	inches	8.329	inches	Unspecified	0.00015	feet	0.11	SPREADSHEET
18	Pipe	Yes	42	inches	8.329	inches	Unspecified	0.00015	feet	0.11	
19	Pipe	Yes	12	inches	8.329	inches	Unspecified	0.00015	feet	0	
20	Pipe	Yes	564	inches	8.329	inches	Unspecified	0.00015	feet	2.04	
21	Pipe	Yes	104	inches	12.39	inches	Unspecified	0.00015	feet	3.484	1.42 PER SS
22	Pipe	Yes	6	inches	6.065	inches	Unspecified	0.00015	feet	0.04	0 PER SS
23	Pipe	Yes	268	inches	6.065	inches	Unspecified	0.00015	feet	0.11	0.61 PER SS
30	Pipe	Yes	0.5	feet	5.047	inches	Unspecified	0.00015	feet	0	

AFT Arrow 3.0 Input
DMJMH+N

(2 of 6)

2/17/2006 12:42 PM

AFT Arrow Model, OGTS Bypass System T-H Model Case 2

Pipe	Name	Pipe Defined	Length	Length Units	Hydraulic Diameter	Hydraulic Diam. Units	Friction Data Set	Roughness	Roughness Units	Losses (K)	Initial Flow
31	Pipe	Yes	0.5	feet	8.329	inches	Unspecified	0.00015	feet	0	

Pipe	Initial Flow Units	Junctions (Up,Down)	Geometry	Material	Size	Type	Thermal Boundary	Ambient Temp.
1		1, 2	Cylindrical Pipe	Stainless Steel	6 inch	schedule 40	Adiabatic	
2		2, 3	Cylindrical Pipe	Stainless Steel	6 inch	schedule 40	Adiabatic	
3		3, 4	Cylindrical Pipe	Stainless Steel	4 inch	schedule 40	Adiabatic	
4		4, 5	Cylindrical Pipe	Stainless Steel	6 inch	schedule 40	Adiabatic	
5		5, 6	Cylindrical Pipe	Unspecified			Adiabatic	
6		6, 7	Cylindrical Pipe	Stainless Steel	6 inch	schedule 40	General Heat Transfer	115
7		7, 8	Cylindrical Pipe	Stainless Steel	5 inch	schedule 40	General Heat Transfer	115
8		8, 9	Cylindrical Pipe	Stainless Steel	6 inch	schedule 40	General Heat Transfer	115
9		9, 10	Cylindrical Pipe	Stainless Steel	6 inch	schedule 40	General Heat Transfer	115
10		10, 11	Cylindrical Pipe	Stainless Steel	6 inch	schedule 40	General Heat Transfer	115
11		9, 12	Cylindrical Pipe	Stainless Steel	6 inch	schedule 40	General Heat Transfer	115
12		12, 11	Cylindrical Pipe	Stainless Steel	6 inch	schedule 40	General Heat Transfer	115
13		11, 13	Cylindrical Pipe	Stainless Steel	8 inch	schedule 10	General Heat Transfer	115
14		13, 14	Cylindrical Pipe	Stainless Steel	8 inch	schedule 10	General Heat Transfer	115
15		14, 15	Cylindrical Pipe	Stainless Steel	8 inch	schedule 10	General Heat Transfer	115
16		15, 16	Cylindrical Pipe	Stainless Steel	8 inch	schedule 10	General Heat Transfer	115
17		16, 17	Cylindrical Pipe	Stainless Steel	8 inch	schedule 10	General Heat Transfer	115
18		17, 18	Cylindrical Pipe	Stainless Steel	8 inch	schedule 10	General Heat Transfer	115
19		18, 19	Cylindrical Pipe	Stainless Steel	8 inch	schedule 10	General Heat Transfer	115
20		19, 20	Cylindrical Pipe	Stainless Steel	8 inch	schedule 10	General Heat Transfer	115
21		21, 22	Cylindrical Pipe	Stainless Steel	12 inch	schedule 10	Adiabatic	
22		22, 23	Cylindrical Pipe	Stainless Steel	6 inch	schedule 40	Adiabatic	
23		23, 13	Cylindrical Pipe	Stainless Steel	6 inch	schedule 40	Adiabatic	
30		8, 30	Cylindrical Pipe	Stainless Steel	5 inch	schedule 40	Adiabatic	
31		14, 31	Cylindrical Pipe	Stainless Steel	8 inch	schedule 10	Adiabatic	

Pipe	Ambient Temp. Units	Special Condition
1		None
2		None
3		None
4		None
5		None
6	deg. F	None
7	deg. F	None
8	deg. F	None
9	deg. F	None
10	deg. F	None
11	deg. F	None
12	deg. F	None
13	deg. F	None
14	deg. F	None
15	deg. F	None
16	deg. F	None
17	deg. F	None
18	deg. F	None
19	deg. F	None
20	deg. F	None
21		None
22		None
23		None
30		None
31		None

AFT Arrow 3.0 Input
DMJMH+N

(3 of 6)

2/17/2006 12:46 PM

AFT Arrow Model, OGTS Bypass System T-H Model

Pipe Loss Table

Pipe Losses	K Total	Standard Bends	Mitre Bends	Smooth Bends	Angle Valves	Ball Valves	Butterfly Valves	Cylinder Valves	Gate Valves	Globe Valves	Plug Valves	Poppet Valves
12	1.31			1 (0.21)								
13	0.11											
15	1.1											
21	3.48											
22	0.04											
23	0.11											

Pipe Losses	Three-way Valves	Swing Check Valves	Lift Check Valves	Tilting Disc Check Valves	Stop Check Valves	Sharp-edged Orifice	Long Orifice	Contractions	Expansions
12									
13									
15									
21									
22									
23									

Pipe Losses	Entrances	Exits	Differential Flowmeter	Honeycomb	Screen	Tee	Add'l Loss
12						1 (1.1)	
13							(0.11)
15						1 (1.1)	
21							(3.48)
22						1 (0.04)	
23							(0.11)

Area Change Table

Area Change	Name	Object Defined	Elevation	Elevation Units	Initial Pressure	Initial Pressure Units	Database Source	Type	Geometry
3	Area Change	Yes	0	feet				Conical	Contraction
4	Area Change	Yes	0	feet				Conical	Expansion
5	Area Change	Yes	0	feet				Conical	Contraction
7	Area Change	Yes	0	feet				Conical	Contraction

Area Change	Angle	Loss Factor
3	22.	0.439751
4	22.	0.1552215
5	22.	0.4403604
7	28.	0.1241176

Compressor/Fan Table

Compressor/Fan	Name	Object Defined	Elevation	Elevation Units	Initial Pressure	Initial Pressure Units	Database Source	Special Condition
17	N31-130	Yes	0	feet				None

Compressor/Fan	Pump Type	Design Flow Rate	Design Flow Rate Units	Current Configuration	Independent Variable	Ind. Variable Units	Dependent Variable
17	Comp./Fan Curve				Vol. Flow Rate	ft3/min	Pressure Loss

Compressor/Fan	Dep. Variable Units	Comp./Fan Curve Constant a	Comp./Fan Curve Constant b	Comp./Fan Curve Constant c	Comp./Fan Curve Constant d	Comp./Fan Curve Constant e
17	in. H2O std.	12.46429	2.571429E-03	-2.285714E-06	0	0

AFT Arrow 3.0 Input (5 of 6) 2/17/2006 12:46 PM
DMJMH+N

AFT Arrow Model, OGTS Bypass System T-H Model Case 4

Tank	(Pipe #7) K In, K Out	(Pipe #8) K In, K Out	(Pipe #9) K In, K Out	(Pipe #10) K In, K Out	(Pipe #11) K In, K Out	(Pipe #12) K In, K Out	(Pipe #13) K In, K Out	(Pipe #14) K In, K Out	(Pipe #15) K In, K Out
1									
20									
21									

Tank	(Pipe #16) K In, K Out	(Pipe #17) K In, K Out	(Pipe #18) K In, K Out	(Pipe #19) K In, K Out	(Pipe #20) K In, K Out	(Pipe #21) K In, K Out	(Pipe #22) K In, K Out	(Pipe #23) K In, K Out	(Pipe #24) K In, K Out
1									
20									
21									

Tank	(Pipe #25) K In, K Out
1	
20	
21	

Tee or Wye Table

Tee or Wye	Name	Object Defined	Elevation	Elevation Units	Initial Pressure	Initial Pressure Units	Database Source	Tee/Wye Type	Loss Type
8	Tee or Wye	Yes	0	feet				Round Straight	Detailed
9	Tee or Wye	Yes	0	feet				Round Straight	Detailed
11	Tee or Wye	Yes	0	feet				Round Straight	Detailed
13	Tee or Wye	Yes	0	feet				Round Straight	Detailed
14	Tee or Wye	Yes	0	feet				Round Straight	Detailed

Tee or Wye	Angle	Pipes A, B, C
8	135	
9	120	
11	30	
13	45	
14	135	

Valve Table

Valve	Name	Object Defined	Elevation	Elevation Units	Initial Pressure	Initial Pressure Units	Database Source	Special Condition	Exit Valve	Exit Pressure
10	HV-901	Yes	0	feet				Closed	No	
12	HV-902	Yes	0	feet				Closed	No	
15	V-166	Yes	0	feet				None	No	
19	V-167	Yes	0	feet				None	No	
23	V-178	Yes	0	feet				None	No	

Valve	Exit Pressure Units	CdA	CdA Units	Loss Model	Loss Value	Independent Variable	Ind. Variable Units	Dependent Variable	Dep. Variable Units	Loss Constant a
10				Cv Constant	1194					
12				Cv Constant	1194					
15				Cv Constant	2440					
19				Cv Constant	2440					
23				Cv Constant	300					

Valve	Loss Constant b	Loss Constant c	Loss Constant d	Loss Constant e
10				
12				
15				
19				
23				

OGTS Bypass System Fluid Flow Model Input Data, Piping/Component Descriptions and Flow Loss Coefficients.

OGTS Bypass System Fluid Flow Model									
P2	Outlet Transition	Flanders, Sudden Contraction, 24 x 6			12.0 SQ/6.357 Rnd		ED1-1	0.500	
"	Piping, 6-AA-35-0218	6" straight duct, S.Stl	6	40S	6.065	42.000	CD11-1	ARROW	
"	Elbow No. 1	90° Elbow, R/D = 1.5, S.Stl	6	40S	6.065		CD3-1	0.130	
"	Piping, 6-AA-35-0218	6" straight duct, S.Stl	6	40S	6.065	62.000	CD11-1	ARROW	
P2	Elbow No. 2	45° Elbow, R/D = 1.5, S.Stl	6	40S	6.065		CD3-3	0.080	
					Total	104.000	inches	[redacted]	
						8.667	ft		
	Component	Details	Size	Schedule	Inside Dia.	L	ASHRAE Fitting No	ASHRAE Loss Coef.	Cv
			(in)		(in)	(in)			
J3	Reducer	6" x 4"	6 x 4	40S	6.065/4.025"	5.500	ED4-1	0.220	
P3	Piping, 4-AA-35-0218	4" straight duct, S.Stl	4	40S	4.025	163.000	CD11-1	ARROW	
P3	Flowmeter	3 ea Size 1 Annubar flowmeter	4				Vendor	1.635	
					Total	163.000	inches	[redacted]	
						13.583	ft		
J4	Reducer	6" x 4" 220° GIVE @ ANGLE FOR	4 x 6	40S	4.025/6.065"	5.500	ED4-1	~~0.220~~ ARROW	

P4 @ 45°

OGTS Bypass System Fluid Flow Model Input Data, Piping/Component Descriptions and Flow Loss Coefficients.

		OGTS Bypass System Fluid Flow Model							
P4	Elbow No. 3	45° Elbow, R/D = 1.5, S.Stl	6	40S	6.065		CD3-3	0.080	
"	Piping, 6-AA-35-0218	6" straight duct, S.Stl	6	40S	6.065	12.000	CD11-1	ARROW	
"	Elbow No. 4 45 or 90	90° Elbow, R/D = 1.5, S.Stl	6	40S	6.065		CD3-3 or 3-1 45°	0.080	
"	Piping, 6-AA-35-0218	6" straight duct, S.Stl	6	40S	6.065	12.000	CD11-1	ARROW	
"	Elbow No. 5 45 or 90	~~90°~~ Elbow, R/D = 1.5, S.Stl	6	40S	6.065		CD3-3	0.080	
P4	Piping, 6-AA-35-0218	6" straight duct, S.Stl	6	40S	6.065	38.000	CD11-1	ARROW	
					Total	62.000	inches	0.[redacted]	
						5.167	ft		
J5	Reducer	6" x 4"	6 x 4	40S	6.065/4.025"	5.500	ED4-1	~~0.220~~ ARROW	
P5	Expansion Joint, EJ-501	4"	4		4.025	22.000	CR6-3	[redacted]	
	(ICV Box CP)								
B	ICV Box Plenum, Stream No. 9 in, 13 out	280 acfm at -2.46" w.g. and 875 °F, 108 scfm or 513 lb/hr (0.143 lb/sec)							
J6	ICV Box plenum CPs (inlet/outlet)	Inlet and Outlet Losses					Crane	1.500	
C	ICV Outlet to Bypass Tie Point, Stream No. 13	280 acfm at -2.46" w.g. and 875 °F, 108 scfm or 513 lb/hr							
	Component	Details	Size	Schedule	Inside Dia.	L	ASHRAE Fitting No	ASHRAE Loss Coef.	Cv

IF 90 STILL OK 0.14

OGTS Bypass System Fluid Flow Model Input Data, Piping/Component Descriptions and Flow Loss Coefficients.

OGTS Bypass System Fluid Flow Model									
			(in)		(in)	(in)			
	(ICV Box CP)								
P6	Piping, 6-VOG-35-0217	6" Duct w 90° Elbow, Internal to AWTE	6	40S	6.065	72.00	CD11-1	ARROW	
P6	Elbow	90° Elbow, R/D = 1.5	5	40S	5.295		CD3-1	0.150	
J7	Reducer	6" x 5"	6 x 5	40S	6.065/5.782"	10.250	ED4-1	~~0.040~~	ARROW
P7	Expansion Joint, EJ-502	DME 5" size	5		4.9	24.000	CR6-3	0.270	
"	Piping, 5-VOG-35-0217	5" Duct	5	40S	5.295	24.000	CD11-1	ARROW	
"	Elbow	45° Elbow, R/D = 1.5	5	40S	5.295		CD3-3	0.090	ASHRAE BOOK SAYS 0.1
"	Piping, 5-VOG-35-0217	5" Duct	5	40S	5.295	93.500	CD11-1	ARROW	
P7	Elbow	45° Elbow, R/D = 1.5	5	40S	5.295		CD3-3	0.090	
					Total	141.500	inches	0.450	
						11.792	ft		
J8	Lateral Wye (For Bypass Flow)	45° Lateral Branch Flow, Main Flow Closed	5 x 5 x 5	40S	5.295	10.000	ED5-2	0.040	
D	OGTS Bypass Main Ducting from Tie Point to HEPA inlet, Stream No. 13	~~280 acfm at -2.46" w.g. and 875 °F, 108 scfm or 513 lb/hr~~							
J8	Lateral Wye (For Bypass Flow)								
P8	Elbow	45° Elbow, R/D = 1.5	5	40S	5.295		CD3-3	0.090	
P8	Reducer	Standard Reducer, 5x6", 11°	6 x 5	40S	5.295/6.065	6.000	ED4-1	0.050	

TOTAL 0.14

OGTS Bypass System Fluid Flow Model Input Data, Piping/Component Descriptions and Flow Loss Coefficients.

OGTS Bypass System Fluid Flow Model									
J9	Lateral Wye, Forward Direction	30° Lateral Wye, Main Flow	6 x 6 x 6	40S	6.065	6.000	ED5-2	0.290	
	Component	Details	Size	Schedule	Inside Dia.	L	ASHRAE Fitting No	ASHRAE Loss Coef.	Cv
			(in)		(in)	(in)			
P9	Piping, 6-VOG-36-0286	6" straight duct, S.Stl	6	40S	6.065	10.500	CD11-1	ARROW	
J10	Valve, HV-901	6" Keystone, FIG. 362-173, Key-Lok	6		5.8125	2.250			1194
P10	Elbow	90° Elbow, R/D = 1.5, S.Stl	6	40S	6.065		CD3-1	0.050	
P10	Piping, 6-VOG-36-0286	6" straight duct, S.Stl	6	40S	6.065	8.000	CD11-1	ARROW	
J11	Lateral Wye Reverse Direction	30° Lateral Wye, Main Flow	6 x 6 x 6	40S	6.065	6.000	ED5-2	0.110	
	Component	Details	Size	Schedule	Inside Dia.	L	ASHRAE Fitting No	ASHRAE Loss Coef.	Cv
			(in)		(in)	(in)			
J9	Lateral Wye, Forward Direction	30° Lateral Wye, Branch Flow	6 x 6 x 6	40S	6.065	6.000	ED5-2	0.610	
P11	Piping, 6-VOG-36-0286	6" straight duct, S.Stl	6	40S	6.065	6.000	CD11-1	ARROW	
P11	Elbow	30° Elbow, R/D = 1.5, S.Stl	6	10S	6.065		CD3-1	0.050	
J12	Valve, HV-902	6" Keystone, FIG. 362-173, Key-Lok	6		5.8125	2.250			1194
P12	Piping, 6-VOG-36-0286	6" straight duct, S.Stl	6	40S	6.065	6.000	CD11-1	ARROW	

OGTS Bypass System Fluid Flow Model Input Data, Piping/Component Descriptions and Flow Loss Coefficients.

OGTS Bypass System Fluid Flow Model									
P12	Std Tee	6" Std Tee, Branch flow							
P12	Piping, 6-VOG-36-0286	6" straight duct, S.Stl	6	40S	6.065	6.000	CD11-1	ARROW	
P12	Elbow	30° Elbow, R/D = 1.5, S.Stl	6	40S	6.065		CD3-1	0.050	
J11	Lateral Wye Reverse Direction	30° Lateral Wye, Branch Flow	6 x 6 x 6	40S	6.065	6.000	ED5-2	0.240	
P13	Piping, 6-VOG-36-0286	6" straight duct, S.Stl	6	40S	6.065	6.000	CD11-1	ARROW	
P13	Reducer	6 x 8 Std Reducer, 19°	6 x 8	40S	6.065/8.329		ED4-1	0.170	
P13	Elbow #1	90° Elbow, R/D = 1.5, S.Stl	8	10S	8.329		CD3-1	0.110	
P13	Piping, 8-VOG-36-0286	8" straight duct, S.Stl	8	10S	8.329	114.000	CD11-1	ARROW	
P13	EJ-635	8" Expansion joint	8	10S	7.900	11.000	CR6-3	0.110	
P13	Piping, 8-VOG-36-0286	8" straight duct, S.Stl	8	10S	8.329	120.000	CD11-1	ARROW	
					Total	251.000	inches	0.390	
						20.917	ft		
J13	Lateral Wye, Forward Direction	45° Lateral Trough Flow (Air Inlet Bleed System@ Branch flow)	8	10S	8.329	10.000	ED5-2	0.290	
P14	Piping, 8-VOG-36-0286	8" straight duct, S.Stl	8	10S	8.329	138.000	CD11-1	ARROW	
"	Elbow #1	90° Elbow, R/D = 1.5, S.Stl	8	10S	8.329		CD3-1	0.110	
"	Piping, 8-VOG-36-0286	8" straight duct, S.Stl	8	10S	8.329	15.000	CD11-1	ARROW	
"	Expansion Joint, EJ-635 + 5 others	8" Expansion joint	8		7.900	11.000	CR6-3	0.660	

OGTS Bypass System Fluid Flow Model Input Data, Piping/Component Descriptions and Flow Loss Coefficients.

			OGTS Bypass System Fluid Flow Model						
P14	Piping, 8-VOG-36-0286	8" straight duct, S.Stl	8	10S	8.329	1805.000	CD11-1	ARROW	
					Total	1969.000	inches	[redacted]	
						164.083	ft		
J14	45° Lateral	45° Lateral Flow Thru branch closed	8 x 8 x 8	10S	8.329		ED5-2	~~0.240~~ ARROW	
P15	Piping, 8-VOG-36-0286	8" straight duct, S.Stl	8	10S	8.329	~~65.500~~	CD11-1	ARROW	
"	Elbow #2	90° Elbow, R/D = 1.5, S.Stl	8	10S	8.329		CD3-1	[redacted]	From ASHRAE HB
"	Piping, 8-VOG-36-0286	8" straight duct, S.Stl	8	10S	8.329	~~100.000~~	CD11-1	ARROW	
"	Std Tee	Std Tee, Branch flow, main flow dead	8 x 8 x 8	10S	8.329			ARROW	
"	Piping, 8-VOG-36-0286	8" straight duct, S.Stl	8	10S	8.329	~~101.000~~	CD11-1	ARROW	
P15	Expansion Joint, EJ-615	8" Expansion joint	8		7.900	11.000	CR6-3	[redacted]	— CAN'T TRACK
	(HEPA Inlet)				Total	277.500	inches	[redacted]	
						23.125	ft		
E	OGTS Bypass HEPA Filter Skid								
	HEPA Filter skid Assembly, 36-D58-138								
	Component	Details	Size	Schedule	Inside Dia.	L	ASHRAE Fitting No	ASHRAE Loss Coef.	Cv
			(in)		(in)	(in)			
J15	Isolation Valve, 36-V-166	8" Keystone, FIG. 362-173, Key-Lok	8		7.625	2.500			[redacted]

LATERAL

DOWN

EXCRESS

OGTS Bypass System Fluid Flow Model Input Data, Piping/Component Descriptions and Flow Loss Coefficients.

OGTS Bypass System Fluid Flow Model									
P16	Inlet Transition	Flanders 8 OD x 15 W x 18 H x 18 L, 30°			8.329	18.000	ED4-2	[illegible]	
J16	HEPA Pre-Filter, 36-N02-136	Flanders 24 W x 24 H x 14 L, 0.12" w.c. (0.24" Dirty) at 750 cfm				14.000			
J16	Test Combination Housing	Flanders 24 W x 24 H x 20 L, 0.5" w.c at 750 acfm				20.000			
J16	HEPA Filter, 36-N02-131	Flanders 24 W x 24 H x 19.375 L, 1.0" w.c. (2.0" Dirty) at 750 acfm				20.000			
J16	Test Outlet Housing	Flanders 24 W x 24 H x 20 L, 0.5" w.c at 750 cfm				20.000			
J16	Outlet Transition	Flanders 8 OD x 15 W x 18 H x 12 L, 45°			8.329	12.000	SD4-2	0.060	.04" @ 750 cfm
		Total Pressure drop at 750 cfm	2.12						
F	OGTS Bypass HEPA Filter Skid Outlet Ducting With Fan to Stack								

OGTS Bypass System Fluid Flow Model Input Data, Piping/Component Descriptions and Flow Loss Coefficients.

OGTS Bypass System Fluid Flow Model									
	Component	Details	Size	Schedule	Inside Dia.	L	ASHRAE Fitting No	ASHRAE Loss Coef.	Cv
			(in)		(in)	(in)			
P17	S1, Piping, 8-VOG-36-0319	8" straight duct, S.Stl, w 8 x 8 x 1 red tee, flow thru	8	10S	8.329	12.000	CD11-1	ARROW	
P17	Expansion Joint, EJ-616	8" Expansion joint	8	10S	7.625		CR6-3	0.110	
					Total	12.000	inches	[redacted]	
						1.000	ft		
J17	Fan, 36-N31-130	1125 ACFM Fan, NYB 1508, See Data Below							
P18	Elbow	90° Elbow, R/D = 1.5, S.Stl	8	10S	8.329		CD3-1	0.110	
"	Piping, 8-VOG-36-0319	8" straight duct, S.Stl,	8	10S	8.329	6.000	CD11-1	ARROW	
P18	Piping, 8-VOG-36-0319	8" straight duct, S.Stl	8	10S	8.329	36.000	CD11-1	ARROW	
					Total	42.000	inches	[redacted]	
						3.500	ft		
J18	Backdraft Damper	SNUPPS Data See Below							
P19	Piping, 8-VOG-36-0319	8" straight duct, S.Stl	8	10S	8.329	12.000	CD11-1	ARROW	
J19	Isolation Valve, 36-V-166	8" Keystone, FIG. 362-173, Key-Lok	8		7.625	2.500			2440
P20	Piping, 8-VOG-36-0319	8" straight duct, S.Stl	8	10S	8.329		CD11-1	ARROW	
"	Expansion Joint, EJ-617	8" Expansion joint	8	10S	7.625	11.000	CR6-3	0.110	

OGTS Bypass System Fluid Flow Model Input Data, Piping/Component Descriptions and Flow Loss Coefficients.

OGTS Bypass System Fluid Flow Model									
"	Lateral Wye, Forward Direction	45° Lateral Branch Flow	8	10S	8.329	24.000	ED5-1	0.610	
"	Piping, 8-VOG-36-0319	8" straight duct, S.Stl	8	10S	8.329	108.000	CD11-1	ARROW	
"	Piping, 8-VOG-36-0319	8" straight duct, S.Stl	8	10S	8.329	246.000	CD11-1	ARROW	
"	Elbow	90° Elbow, R/D = 1.5, S.Stl	8	10S	8.329		CD3-1	0.110	
"	Piping, 8-VOG-36-0319	8" straight duct, S.Stl	8	10S	8.329	34.000	CD11-1	ARROW	
"	Elbow	90° Elbow, R/D = 1.5, S.Stl	8	10S	8.329		CD3-1	0.110	
"	Piping, 8-VOG-36-0319	8" straight duct, S.Stl	8	10S	8.329	144.000	CD11-1	ARROW	
"	Reducer	8 x 12 Std Reducer, 28.5°	8 x 12	10S	8.329/12.39	8.000	ED4-1	0.330	
P20	Sudden Expansion	12 x large	12 x 56				ED4-1	0.880	
					Total	564.000	inches	2.040	
						47.000	ft		
J20	OGTS Stack	1 atm pressure							
	Component	Details	Size	Schedule	Inside Dia.	L	ASHRAE Fitting No	ASHRAE Loss Coef.	Cv
			(in)		(in)	(in)			
J21	Atmospheric Pressure Junction								

OGTS Bypass System Fluid Flow Model Input Data, Piping/Component Descriptions and Flow Loss Coefficients.

OGTS Bypass System Fluid Flow Model									
P21	Inlet Screen	16" Cicular Intake with birdscreen, (60% open) S.Stl	16		15.624		CD6-1	0.970	
"	Reducer	16" x 12"	16 x 12	10S	15.624/12.39	14.000	ED4-1	0.120	
"	Inlet Piping, 12-VOG-36-0409	12" straight duct, S.Stl	12	10S	12.39	90.000	CD11-1	ARROW	
"	Elbow #1	90° Elbow, R/D = 1.5, S.Stl	12	10S	12.39		CD3-1	0.110	
"	Elbow #2	90° Elbow, R/D = 1.5, S.Stl	12	10S	12.39		CD3-1	0.110	
P21	Elbow #3	90° Elbow, R/D = 1.5, S.Stl	12	10S	12.39		CD3-1	0.110	
					Total	104.000	inches	1.420	
						8.667	ft		
J22	HEPA Inlet Transition	Flanders, Transition 12" x 28" SQ x 11.25" L, 30°			12.0 dia x 28" SQ	11.250	ED4-2	0.780	0.01" @ 250 cfm
J22	Heater Element, 36-N84-140	Watlow/Chromalox 0.25" w.c. @ 1000 cfm				2.000			
J22	HEPA Pre-Filter, 36-N02-135	Flanders, 0.12" w.c. (0.24: dirty) at 1000 cfm	24 x 24			2.000			
J22	HEPA Filter, 36-N02-134	Flanders, 1.0" w.c. (2.0" dirty) at 1000 cfm, P-007-W-43-N2-NU-51-23-CC-FU5	24 x 24			5.875			

OGTS Bypass System Fluid Flow Model Input Data, Piping/Component Descriptions and Flow Loss Coefficients.

OGTS Bypass System Fluid Flow Model									
J22	Outlet Transition	Flanders, Transition 6" x 28" SQ x 11.25" L, 45°			6.065 dia x 28" SQ	11.250	SD4-2	0.110	0.002" @ 250 cfm
		Total Pressure drop at 1000 cfm	1.382						
P22	Piping, 6-VOG-36-0408	6" straight duct, S.Stl, w 6 x 6 x 1 red tee, flow thru	6	40S	6.357	6.000	CD11-1	ARROW	
J23	Valve, 36-V-178	6" Keystone, Variable Cv	6			2.250			1194
P23	Piping, 6-VOG-36-0408	6" straight duct, S.Stl	6	40S	6.357	41.000	CD11-1	ARROW	
"	Elbow	90° Elbow, R/D = 1.5, S.Stl	6	40S	6.357		CD3-1	0.110	
"	Expansion Joint, EJ-614	6" Expansion Joint	6	40S	5.9	11.000	CR6-3	0.240	
"	Tee	6 x 6 x 1 tee, flow thru	6	40S	6.357	12.000	ED5-3	0.260	
P23	Piping, 6-VOG-36-0408	6" straight duct, S.Stl	6	40S	6.357	204.000	CD11-1	ARROW	
					Total	268.000	inches	0.610	
						22.333	ft		
J13	Wye #1	45° Lateral Branch Flow	6 x 8	40S	6.357/8.329"	10.000	ED5-2	0.610	
	Fan Curve, NYB Model No. 1508	Test Density: 0.0553 lbm/cu ft	Mechanical						

OGTS Bypass System Fluid Flow Model Input Data, Piping/Component Descriptions and Flow Loss Coefficients.

OGTS Bypass System Fluid Flow Model									
	Q Ft/ Min	dP, IN H2O Std	Efficiency, %						
	0	12	67.36						
	500	13.75	67.36						
	1000	13	67.36						
	1500	11.25	67.36						
	2000	8	67.36						
	2500	4.25	67.36						
	3000	0	67.36						
	Backdraft Damper Pressure Drop	Ref. SNUPPS 90144							
		24 x 24 prototype	For 8" Pipe	Area	sch 10 Dia.				
	Vs, fpm	dP, inches w.c.	Q, CFM	sq. ft	ft.				
	700	0.13	264.9	0.378	0.694				
	800	0.135	302.7						
	900	0.14	340.5						
	1000	0.145	378.4						
	1500	0.18	567.6						
	2000	0.23	756.7						
	2500	0.27	945.9						
	3000	0.32	1135.1						
	3500	0.36	1324.3						

Tel:
Fax:

ASHRAE DUCT FITTING DATABASE
Version 2.5.0

Friday, February 10, 2006

(CR6-3) Orifice, Thick-Edged
(Idelchik 1986, Diagram 4-15)

INPUTS			OUTPUTS	
Height (Ho, in.)	5.3		Velocity (Vo, fpm)	2085
Width (Wo, in.)	5.3		Vel Pres at Vo (Pv, in. wg)	0.26
Height (H1, in.)	4.9		Loss Coefficient (Co)	[redacted]
Width (W1, in.)	4.9		Pressure Loss (in. wg)	0.07
Length (L, in.)	24.0			
Flow Rate (Q, cfm)	408			

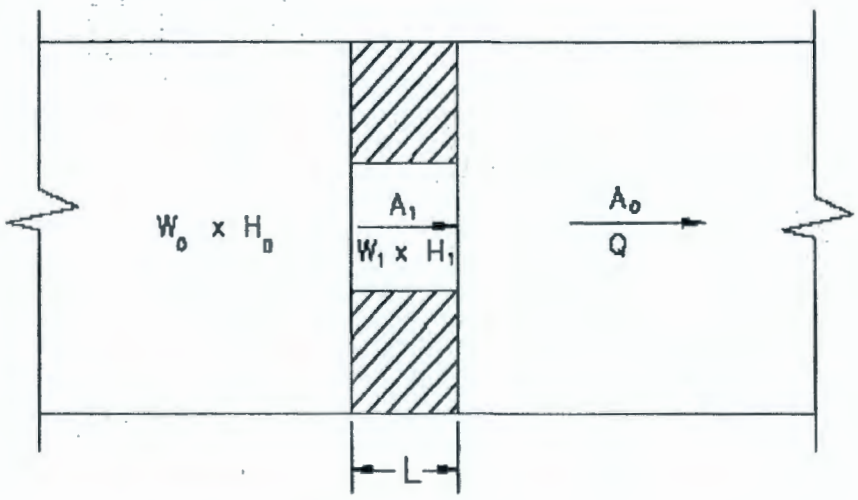

$L/Dh > 0.015$

$Dh = 2A_1/(H_1 + W_1)$

NEED ONE MORE @ ~~750~~ 1125 CFM
FOR THIS ONE 11"

USE ASHRAE HAND BOOK FOR THIS ONE

Ta :
Fac

ASHRAE DUCT FITTING DATABASE
Version 2.5.0

Friday, February 10, 2006

(CD3-1) Elbow, Die Stamped, 90 Degree, r/D = 1.5
(UMC 1985, Report SRF785; Idelchik 1986, Diagram 6-1)

INPUTS			**OUTPUTS**	
Diameter (D, in.)	8.4		Velocity (Vo, fpm)	1942
Flow Rate (Q, cfm)	408		Vel Pres at Vo (Pv, in. wg)	0.21
			Loss Coefficient (Co)	0.13
			Pressure Loss (in. wg)	0.03

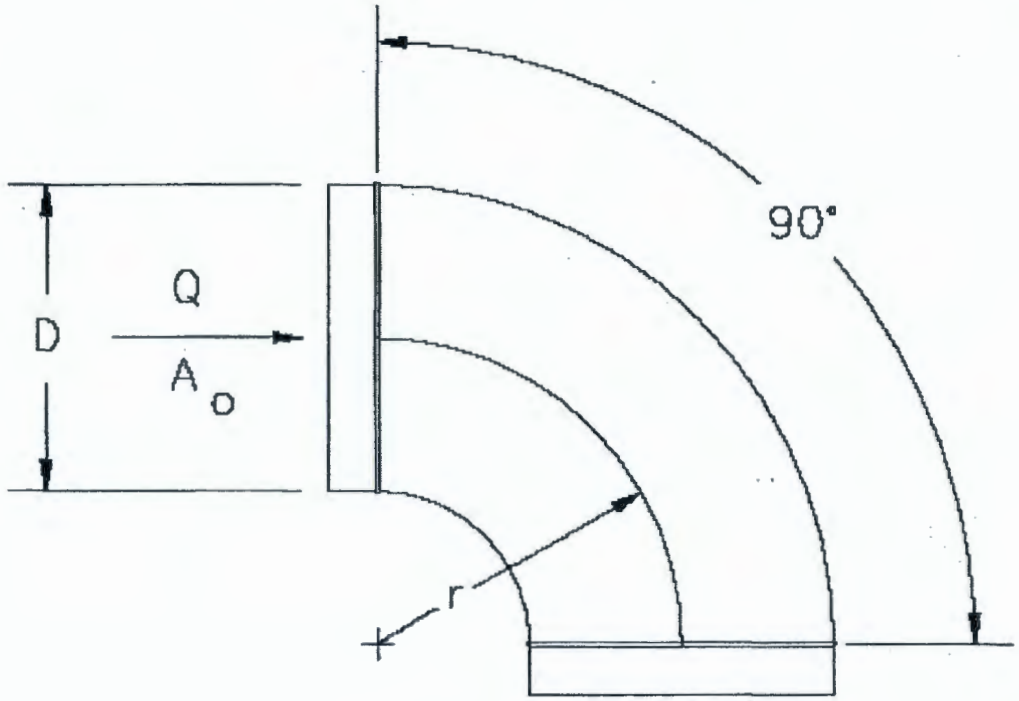

USE HANDBOOK

Tel:
Fax:

ASHRAE DUCT FITTING DATABASE
Version 2.5.0

Friday, February 10, 2006

(CD3-3) Elbow, Die Stamped, 45 Degree, r/D = 1.5
(UMC 1985, Report SRF785; Idelchik 1986, Diagram 6-1)

INPUTS			OUTPUTS	
Diameter (D, in.)	5.3		Velocity (Vo, fpm)	2855
Flow Rate (Q, cfm)	408		Vel Pres at Vo (Pv, in. wg)	0.43
			Loss Coefficient (Co)	0.09
			Pressure Loss (in. wg)	0.04

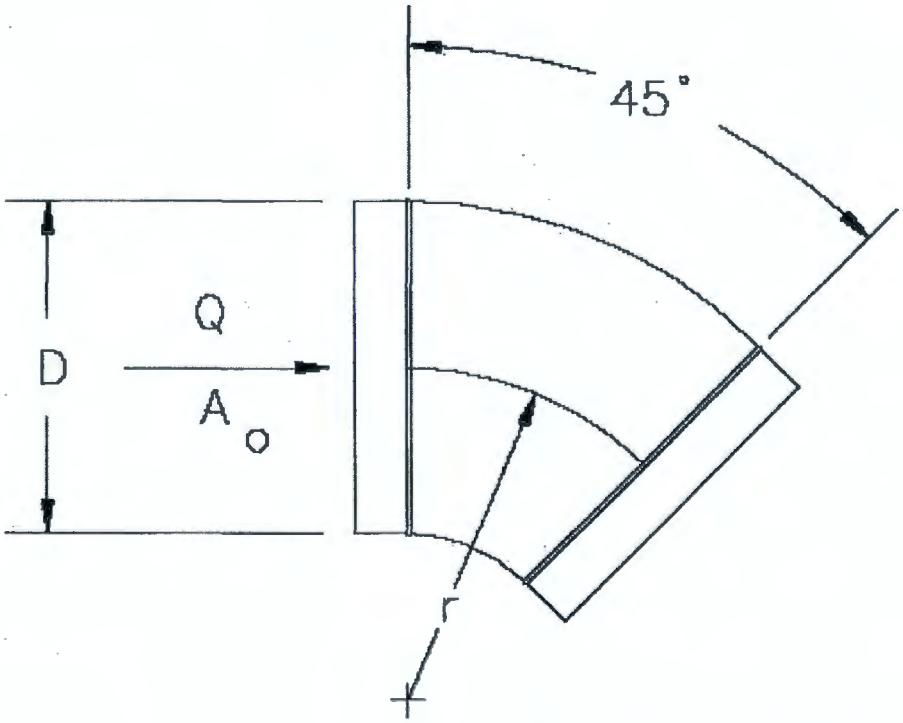

Tel:
Fax:

ASHRAE DUCT FITTING DATABASE
Version 2.5.0

Friday, February 10, 2006

(ED4-1) Transition, Round to Round, Exhaust/Return Systems
(Idelchik 1986, Diagrams 5-2 & 5-22)

INPUTS

#'s NOT SAME FROM SPREAD SHEET

OUTPUTS

Diameter (Do, in.)	6.4		Velocity (Vo, fpm)	1842
Diameter (D1, in.)	4.4		Velocity (V1, fpm)	3810
Angle (Theta, deg.)	22		Vel Pres at Vo (Pvo, in. wg)	0.21
Flow Rate (Q, cfm)	406		Vel Pres at V1 (Pv1, in. wg)	0.88
			Loss Coefficient (Co)	0.22
			Loss Coefficient (C1)	0.05
			Pressure Loss (in. wg)	0.04

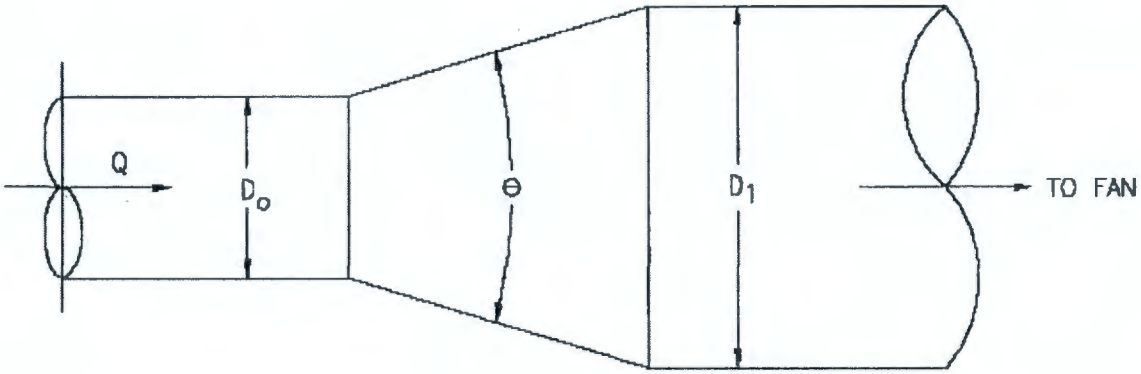

A_0/A_1 < or > 1

Keystone K-LOK Figure 360/362 and 370/372

ANSI/FCI 70-2 Control Valve Seat Leakage, Tolerances, and Test Specifications

ANSI B16.104-1976	Maximum Leakage			Test Medium	Pressure and Temperature
Class VI	Nominal Port Diameter (in.)	Bubbles per Minute[3]	mL per Minute	Air or Nitrogen	Service ΔP or 50 psig [3.4 bar differential], whichever is lower, at 50° to 125°F [10° to 52°C]
	2	3	0.45		
	2½	4	0.60		
	3	6	0.90		
	4	11	1.70		
	6	27	4.00		
	8	45	6.75		
Class V	5 x 10-4 ml/min/psig/in. port dia. [5 x 10-12 m³/sec/bar differential/mm port dia.]			Water	Service ΔP at 50° to 125°F [10° to 52°C]
Class IV	0.01% valve capacity at full travel			Air or Water	Service ΔP or 50 psig [3.4 bar differential], whichever is lower, at 50° to 125°F [10° to 52°C]

Notes

1. K-LOK polymer, elastomer and fire-safe seats provide ANSI Class VI shutoff.
2. K-LOK metal seats provide ANSI Class IV shutoff.
3. Using the ANSI/FCI specified calibrated measuring device.

Reference ANSI/FCI 70-2 for further information.

C_v Values vs. Travel Position

Size (in.)	Angle of Opening 10°	20°	30°	40°	50°	60°	70°	80°	CL 150 90°	CL 300 90°
2	6	10	19	34	51	78	105	134	163	160
2½	8	10	19	34	53	80	111	148	175	170
3	9	12	24	43	67	100	139	186	220	215
4	16	23	44	80	130	194	269	360	425	413
5	30	44	83	149	242	366	504	673	795	785
6	50	70	130	230	370	550	760	1,010	1,195	1,140
8	83	117	251	437	685	1,052	1,468	2,001	2,440	2,309
10	144	202	454	754	1,185	1,821	2,611	3,541	4,540	4,333
12	208	304	678	1,051	1,625	2,766	3,839	5,325	6,915	6,600
14	257	360	747	1,188	1,909	3,121	4,416	6,225	8,300	7,920
16	308	432	803	1,422	2,289	3,614	5,261	7,580	10,040	9,560
18	373	548	1,121	1,869	2,990	4,735	6,728	9,845	12,460	11,800
20	463	680	1,390	2,315	4,010	6,175	8,795	12,655	15,430	14,720
24	650	991	2,076	3,803	6,060	9,091	13,301	18,466	21,660	20,665
30	1,015	1,550	3,240	4,670	9,460	14,200	21,400	29,600	36,000	35,500
36	1,460	2,300	4,640	5,950	13,700	21,000	30,400	44,000	56,000	55,500

Vacuum Rating

The combination of interference fit seats and bi-directional packing makes the K-LOK especially well suited for vacuum service.

Standard K-LOK high performance valves are rated to an absolute pressure of 4 x 10-5 inch Hg. Higher vacuum applications are available.

Actuator Selection

Actuator Type	Figure	Remark
Handle	F401	Lever lock
Gear	F420 and F500 Series	
Pneumatic	F79U	With extended travel adapter
Gear & Pneumatic	F483 + F79U	Declutchable gear unit provides manual override for the Keystone pneumatic actuator
Electric	F777	

Tyco reserves the right to change product design and specifications without notice. Copyright © 2002 by Tyco International Ltd. KEYNC-0032 6

	OGTS Bypass System Fluid Flow Model								
A	ICV Box plenum HEPA filter, 35-N02-010, Stream No. 9	406 acfm at -2.24" w.g. and 77 °F, tbd scfm or tbd lb/hr (TBR)							
	Component	Details	Size	Schedule	Inside Dia.	L	ASHRAE Fitting No	ASHRAE Loss Coef.	Cv
			(in)		(in)	(in)			
J1	Atmospheric Junction								
P1	Inlet Housing and screen	16" square Intake with birdscreen, (60% open) S.Stl	16 x 16		17.4906454372773		CR6-1/ER3-1	=0.97+1.15	
"	Inlet Piping, 6-AA-35-0218	6" straight duct, S.Stl	6	40S	6.065	=5*12+4	CD11-1	ARROW	
P1	N02-010 Inlet Transition	Flanders, Sudden Expansion, 6 dia x 24 SQ, 180°	6	40S	6.065/24.0 SQ		ED4-2	0.81	
					Total	=+SUM(G6:G8)	inches	=+SUM(I6:I8)	
						=+G9/12	ft		
J2	HEPA Filter, 36-N02-010 Pre	Flanders, 0.12" w.c. (0.24" Dirty) at 500 cfm							
J2	HEPA Filter, 36-N02-010	Flanders, 1.0" w.c. (2.0" Dirty) at 500 cfm, P-007-W-43-N2-NU-51-23-GG-DU5	24 x 24 x 16						
		Total Pressure drop at 500 cfm	1.12						
P2	Outlet Transition	Flanders, Sudden Contraction, 24 x 6			12.0 SQ/6.065 Rnd		ED1-1	0.5	
"	Piping, 6-AA-35-0218	6" straight duct, S.Stl	6	40S	6.065	=3*12+6	CD11-1	ARROW	
"	Elbow No. 1	90° Elbow, R/D = 1.5, S.Stl	6	40S	6.065		CD3-1	0.13	
"	Piping, 6-AA-35-0218	6" straight duct, S.Stl	6	40S	6.065	=5*12+2	CD11-1	ARROW	
P2	Elbow No. 2	45° Elbow, R/D = 1.5, S.Stl	6	40S	6.065		CD3-3	0.08	
					Total	=+SUM(G18:G21)	inches	=+SUM(I18:I21)	
						=+G22/12	ft		
	Component	Details	Size	Schedule	Inside Dia.	L	ASHRAE Fitting No	ASHRAE Loss Coef.	Cv
			(in)		(in)	(in)			
J3	Reducer	6" x 4"	6 x 4	40S	6.065/4.026"	5.5	ED4-1	0.22	
P3	Piping, 4-AA-35-0218	4" straight duct, S.Stl	4	40S	4.026	=13*12+7	CD11-1	ARROW	
P3	Flowmeter	3 ea Size 1 Annubar flowmeter	4				Vendor	=0.545*3	
					Total	=+SUM(G28:G29)	inches	=+SUM(I28:I29)	
						=+G30/12	ft		
J4	Reducer	6" x 4" or STATE O	4 x 6	40S	4.026/6.065"	5.5	ED4-1	~~0.22~~ ARROW	
P4	Elbow No. 3	45° Elbow, R/D = 1.5, S.Stl	6	40S	6.065		CD3-1 or K	0.08	
"	Piping, 6-AA-35-0218	6" straight duct, S.Stl	6	40S	6.065	12	CD11-1	ARROW	
"	Elbow No. 4	45° or 90° Elbow, R/D = 1.5, S.Stl	6	40S	6.065		CD3-3	0.08	
"	Piping, 6-AA-35-0218	6" straight duct, S.Stl	6	40S	6.065	12	CD11-1	ARROW	
"	Elbow No. 5	45° or 90° Elbow, R/D = 1.5, S.Stl	6	40S	6.065		CD3-3	0.08	
P4	Piping, 6-AA-35-0218	6" straight duct, S.Stl	6	40S	6.065	=3*12+2	CD11-1	ARROW	
					Total	=+SUM(G34:G39)	inches	=+SUM(I34:I39)	
						=+G40/12	ft		
J5	Reducer	6" x 4" or STATE O	6 x 4	40S	6.065/4.026"	5.5	ED4-1	~~0.22~~ ARROW	
P5	Expansion Joint, EJ-501	4"	4		4.025	22	CR6-3	0.32	
J6	(ICV Box CP)								
B	ICV Box Plenum, Stream No. 9 in, 13 out	280 acfm at -2.46" w.g. and 875 °F, 108 scfm or 513 lb/hr (0.143 lb/sec)							
J6	ICV Box plenum CPs (inlet/outlet)	Inlet and Outlet Losses					Crane	1.5	
C	ICV Outlet to Bypass Tie Point, Stream No. 13	280 acfm at -2.46" w.g. and 875 °F, 108 scfm or 513 lb/hr							
	Component	Details	Size	Schedule	Inside Dia.	L	ASHRAE Fitting No	ASHRAE Loss Coef.	Cv
			(in)		(in)	(in)			
	(ICV Box CP)								
P6	Piping, 6-VOG-35-0217	6" Duct w 90° Elbow, Internal to AWTE	6	40S	6.065	=6*12	CD11-1	ARROW	
P6	Elbow	90° Elbow, R/D = 1.5	5	40S	5.295		CD3-1	0.15	
J7	Reducer	6" x 5"	6 x 5	40S	6.065/5.187	10.25	ED4-1	~~0.04~~ ARROW	
P7	Expansion Joint, EJ-502	DME 5" size	5		4.9	24	CR6-3	~~0.27~~	
"	Piping, 5-VOG-35-0217	5" Duct	5	40S	5.295	24	CD11-1	ARROW	
"	Elbow	45° Elbow, R/D = 1.5	5	40S	5.295		CD3-3	0.09	
"	Piping, 5-VOG-35-0217	5" Duct	5	40S	5.295	=7*12+9.5	CD11-1	ARROW	
P7	Elbow	45° Elbow, R/D = 1.5	5	40S	5.295		CD3-3	0.09	
					Total	=+SUM(G58:G62)	inches	=+SUM(I58:I62)	= 0.45
						=+G63/12	ft		
J8	Lateral Wye (For Bypass Flow)	45° Lateral Branch Flow, Main Flow Closed	5 x 5 x 5	40S	5.295	10	ED5-2	0.04	

54 55 56 57 58 59

57 58 59 60 61 62

IF 90 should be 0.14

D	OGTS Bypass Main Ducting from Tie Point to HEPA inlet, Stream No. 13	280 acfm at -2.46" w.g. and 875 °F, 108 scfm or 513 lb/hr							
J8	Lateral Wye (For Bypass Flow)								
P8	Elbow	45° Elbow, R/D = 1.5	5	40S	5.295		CD3-3	0.09	
P8	Reducer	Standard Reducer, 5x6", 11°	6 x 5	40S	5.295/6.065	6	ED4-1	0.05	
J9	Lateral Wye, Forward Direction	30° Lateral Wye, Main Flow	6 x 6 x 6	40S	6.065	6	ED5-2	0.29	
	Component	Details	Size (in)	Schedule	Inside Dia. (in)	L (in)	ASHRAE Fitting No	ASHRAE Loss Coef.	Cv
P9	Piping, 6-VOG-36-0286	6" straight duct, S.Stl	6	40S	6.065	10.5	CD11-1	ARROW	
J10	Valve, HV-901	8" Keystone, FIG. 362-173, Key-Lok	6		5.8125	2.25			1194
P10	Elbow	90° Elbow, R/D = 1.5, S.Stl	6	40S	6.065		CD3-1	0.05	
P10	Piping, 6-VOG-36-0286	6" straight duct, S.Stl	6	40S	6.065	8	CD11-1	ARROW	
J11	Lateral Wye Reverse Direction	30° Lateral Wye, Main Flow	6 x 6 x 6	40S	6.065	6	ED5-2	0.11	
	Component	Details	Size (in)	Schedule	Inside Dia. (in)	L (in)	ASHRAE Fitting No	ASHRAE Loss Coef.	Cv
J9	Lateral Wye, Forward Direction	30° Lateral Wye, Branch Flow	6 x 6 x 6	40S	6.065	6	ED5-2	0.61	
P11	Piping, 6-VOG-36-0286	6" straight duct, S.Stl	6	40S	6.065	6	CD11-1	ARROW	
P11	Elbow	30° Elbow, R/D = 1.5, S.Stl	8	10S	8.329		CD3-1	0.05	
J12	Valve, HV-902	8" Keystone, FIG. 362-173, Key-Lok	6		5.8125	2.25			1194
P12	Piping, 6-VOG-36-0286	6" straight duct, S.Stl	6	40S	6.065	6	CD11-1	ARROW	
P12	Std Tee	6" Std Tee, Branch flow							
P12	Piping, 6-VOG-36-0286	6" straight duct, S.Stl	6	40S	6.065	6	CD11-1	ARROW	
P12	Elbow	30° Elbow, R/D = 1.5, S.Stl	6	40S	6.065		CD3-1	0.05	
J11	Lateral Wye Reverse Direction	30° Lateral Wye, Branch Flow	6 x 6 x 6	40S	6.065	6	ED5-2	0.24	
P13	Piping, 6-VOG-36-0286	6" straight duct, S.Stl	6	40S	6.065	6	CD11-1	ARROW	
P13	Reducer	6 x 8 Std Reducer, 19°	6 x 8	40S	6.065/8.329		ED4-1	0.17	
P13	Elbow #1	90° Elbow, R/D = 1.5, S.Stl	8	10S	8.329		CD3-1	0.11	
P13	Piping, 8-VOG-36-0286	8" straight duct, S.Stl	8	10S	8.329	=9*12+6	CD11-1	ARROW	
P13	EJ - 635	8" Expansion joint	8	10S	7.9	11	CR6-3	0.11	
P13	Piping, 8-VOG-36-0286	8" straight duct, S.Stl	8	10S	8.329	=10*12	CD11-1	ARROW	
					Total	=+SUM(G94:G99)	inches	=+SUM(I94:I99)	
						=+G100/12	ft		
J13	Lateral Wye, Forward Direction	45° Lateral Trough Flow (Air Dilution System@ Branch flow)	8	10S	8.329	10	ED5-2	0.29	
P14	Piping, 8-VOG-36-0286	8" straight duct, S.Stl	8	10S	8.329	=11*12+6	CD11-1	ARROW	
"	Elbow #1	90° Elbow, R/D = 1.5, S.Stl	8	10S	8.329		CD3-1	0.11	
"	Piping, 8-VOG-36-0286	8" straight duct, S.Stl	8	10S	8.329	15	CD11-1	ARROW	
"	Expansion Joint, EJ-635 + 5 others	8" Expansion joint	8		7.9	11	CR6-3	=0.11*6	
P14	Piping, 8-VOG-36-0286	8" straight duct, S.Stl	8	10S	8.329	=76*12+32*12+6-21-8+44*12-	CD11-1	ARROW	
					Total	=+SUM(G104:G108)	inches	=+SUM(I104:I108)	
						=+G109/12	ft		
J14	45° Lateral	45° Lateral Flow Thru branch closed	8 x 8 x 8	10S	8.329		ED5-2	~~0.24~~ ARROW	
P15	Piping, 8-VOG-36-0286	8" straight duct, S.Stl	8	10S	8.329	=6*12+5.5-12	CD11-1	ARROW	
"	Elbow #2	90° Elbow, R/D = 1.5, S.Stl	8	10S	8.329		CD3-1	0.11	
"	Piping, 8-VOG-36-0286	8" straight duct, S.Stl	8	10S	8.329	=8*12+4	CD11-1	ARROW	
"	Std Tee	Std Tee, Branch flow, main flow dead	8 x 8 x 8	10S	8.329			ARROW	
"	Piping, 8-VOG-36-0286	8" straight duct, S.Stl	8	10S	8.329	=8*12+5	CD11-1	ARROW	
P15	Expansion Joint, EJ-615	8" Expansion joint	8		7.9	11	CR6-3	0.11	
	(HEPA Inlet)				Total	=+SUM(G113:G118)	inches	=+SUM(I113:I118)	
						=+G119/12	ft		
E	OGTS Bypas HEPA Filter Skid								
	HEPA Filter skid Assembly, 36-D58-138								
	Component	Details	Size (in)	Schedule	Inside Dia. (in)	L (in)	ASHRAE Fitting No	ASHRAE Loss Coef.	Cv
J15	Isolation Valve, [redacted]	[redacted] 173, Key-Lok	[redacted]		7.625	2.5			[redacted]
P16	Inlet Transition	Flanders 8 OD x 15 W x 18 H x 18 L, 30°			8.329	18	ED4-2	0.43	
J16	HEPA Pre-Filter, 36-N02-136	Flanders 24 W x 24 H x 14 L, 0.12" w.c. (0.24" Dirty) at 750 cfm				14			
J16	Test Combination Housing	Flanders 24 W x 24 H x 20 L, 0.5" w.c at 750 acfm				20			

J16	HEPA Filter, 36-N02-131	Flanders 24 W x 24 H x 19.375 L, 1.0" w.c. (2.0" Dirty) at 750 acfm				20			
J16	Test Outlet Housing	Flanders 24 W x 24 H x 20 L, 0.5" w.c at 750 cfm				20			
J16	Outlet Transition	Flanders 8 OD x 15 W x 18 H x 12 L, 45°			8.329	12	SD4-2	0.06	.04" @ 750 cfm
		Total Pressure drop at 750 cfm	=0.12+0.5+1+0.5						
F	OGTS Bypas HEPA Filter Skid Outlet Ducting With Fan to Stack								
	Component	Details	Size	Schedule	Inside Dia.	L	ASHRAE Fitting No	ASHRAE Loss Coef.	Cv
			(in)		(in)	(in)			
P17	S1, Piping, 8-VOG-36-0319	8" straight duct, S.Stl, w 8 x 8 x 1 red tee, flow thru	8	10S	8.329	12	CD11-1	ARROW	
P17	Expansion Joint, EJ-616	8" Expansion joint	8	10S	7.625		CR6-3	0.11	
					Total	=+SUM(G140:G141)	inches	=+SUM(I140:I141)	
						=+G142/12	ft		
J17	Fan, 36-N31-130	750 ACFM Fan, NYB 1508, See Data Below							
P18	Elbow	90° Elbow, R/D = 1.5, S.Stl	8	10S	8.329		CD3-1	0.11	
"	Piping, 8-VOG-36-0319	8" straight duct, S.Stl	8	10S	8.329	6	CD11-1	ARROW	
P18	Piping, 8-VOG-36-0319	8" straight duct, S.Stl	8	10S	8.329	36	CD11-1	ARROW	
					Total	=+SUM(G146:G148)	inches	=+SUM(I146:I148)	
						=+G149/12	ft		
J18	Backdraft Damper	SNUPPS Data See Below							
P19	Piping, 8-VOG-36-0319	8" straight duct, S.Stl	8	10S	8.329	12	CD11-1	ARROW	
J19	Isolation Valve, 36-V-166	8" Keystone, FIG. 362-173, Key-Lok	8		7.625	2.5			2440
P20	Piping, 8-VOG-36-0319	8" straight duct, S.Stl	8	10S	8.329		CD11-1	ARROW	
"	Expansion Joint, EJ-617	8" Expansion joint	8	10S	7.625	11	CR6-3	0.11	
"	Lateral Wye, Forward Direction	45° Lateral Branch Flow	8	10S	8.329	24	ED5-1	0.61	
"	Piping, 8-VOG-36-0319	8" straight duct, S.Stl	8	10S	8.329	=9*12	CD11-1	ARROW	
"	Piping, 8-VOG-36-0319	8" straight duct, S.Stl	8	10S	8.329	=20*12+6	CD11-1	ARROW	
"	Elbow	90° Elbow, R/D = 1.5, S.Stl	8	10S	8.329		CD3-1	0.11	
"	Piping, 8-VOG-36-0319	8" straight duct, S.Stl	8	10S	8.329	=2*12+10	CD11-1	ARROW	
"	Elbow	90° Elbow, R/D = 1.5, S.Stl	8	10S	8.329		CD3-1	0.11	
"	Piping, 8-VOG-36-0319	8" straight duct, S.Stl	8	10S	8.329	=12*12	CD11-1	ARROW	
"	Reducer	8 x 12 Std Reducer, 28.5°	8 x 12	10S	8.329/12.39	8	ED4-1	0.33	
P20	Sudden Expansion	12 x large	12 x 56				ED4-1	0.88	
					Total	=+SUM(G156:G165)	inches	=+SUM(I156:I165)	
						=+G166/12	ft		
J20	OGTS Stack	1 atm pressure							
~~G~~	~~OGTS Bypass HEPA filter, 36-D58-140~~	~~80 acfm at -2.24" w.g. and 77 °F, 76 acfm or 350 lb/hr~~							
	Component	Details	Size	Schedule	Inside Dia.	L	ASHRAE Fitting No	ASHRAE Loss Coef.	Cv
			(in)		(in)	(in)			
J21	Atmospheric Pressure Junction								
P21	Inlet Screen	16" Cicular Intake with birdscreen, (60% open) S.Stl	16		15.624		CD6-1	0.97	
"	Reducer	16" x 12"	16 x 12	10S	15.624/12.39	14	ED4-1	0.12	
"	Inlet Piping, 12-VOG-36-0409	12" straight duct, S.Stl	12	10S	12.39	90	CD11-1	ARROW	
"	Elbow #1	90° Elbow, R/D = 1.5, S.Stl	12	10S	12.39		CD3-1	0.11	
"	Elbow #2	90° Elbow, R/D = 1.5, S.Stl	12	10S	12.39		CD3-1	0.11	
P21	Elbow #3	90° Elbow, R/D = 1.5, S.Stl	12	10S	12.39		CD3-1	0.11	
					Total	=+SUM(G174:G179)	inches	=+SUM(I174:I179)	
						=+G180/12	ft		
J22	HEPA Inlet Transition	Flanders, Transition 12" x 28" SQ x 11.25" L, 30°			12.0 dia x 28" SQ	11.25	ED4-2	0.78	0.01" @ 250 cfm
J22	Heater Element, 36-N84-140	Watlow/Chromalox 0.25" w.c. @ 1000 cfm				2			
J22	HEPA Pre-Filter, 36-N02-135	Flanders, 0.12" w.c. (0.24: dirty) at 1000 cfm	24 x 24			2			
J22	HEPA Filter, 36-N02-134	Flanders, 1.0" w.c. (2.0" dirty) at 1000 cfm, P-007-W-43-N2-NU-51-23-CC-FU5	24 x 24			5.875			
J22	Outlet Transition	Flanders, Transition 6" x 28" SQ x 11.25" L, 45°			6.065 dia x 28" SQ	11.25	SD4-2	0.11	0.002" @ 250 cfm
		Total Pressure drop at 1000 cfm	1.12						
P22	Piping, 6-VOG-36-0408	6" straight duct, S.Stl, w 6 x 6 x 1 red tee, flow thru	6	40S	6.065	6	CD11-1	ARROW	
J23	Valve, 36-V-178	6" Keystone, Variable Cv	6			2.25			1194
P23	Piping, 6-VOG-36-0408	6" straight duct, S.Stl	6	40S	6.065	=3*12+5	CD11-1	ARROW	

"	Elbow	90° Elbow, R/D = 1.5, S.Stl	6	40S	6.065		CD3-1	0.11	
"	Expansion Joint, EJ-614	6" Expansion Joint	6	40S	5.9	11	CR6-3	0.24	
"	Tee	6 x 6 x 1 tee, flow thru	6	40S	6.065	12	ED5-3	0.26	
P23	Piping, 6-VOG-36-0408	6" straight duct, S.Stl	6	40S	6.065	=17*12	CD11-1	ARROW	
					Total	=+SUM(G194:G198)	inches	=+SUM(I194:I198)	
						=+G199/12	ft		
J13	Wye #1	45° Lateral Branch Flow	6 x 8	40S	6.065/8.329"	10	ED5-2	0.61	
	Fan Curve, NYB Model No. 1508	Test Density: 0.0553 lbm/cu ft	Mechanical						
	Q Ft/ Min	dP, IN H2O Std	Efficiency, %						
	0	12	67.36						
	500	13.75	67.36						
	=500+B207	13	67.36						
	=500+B208	11.25	67.36						
	=500+B209	8	67.36						
	=500+B210	4.25	67.36						
	=500+B211	0	67.36						
	Backdraft Damper Pressure Drop	Ref. SNUPPS 90144							
		24 x 24 prototype	For 8" Pipe	Area	sch 10 Dia.				
	Vs, fpm	dP, inches w.c.	Q, CFM	sq. ft	ft.				
	700	0.13	=+B217*E$217	=+PI()*F217^2/4	=8.329/12				
	800	0.135	=+B218*E$217						
	900	0.14	=+B219*E$217						
	1000	0.145	=+B220*E$217						
	1500	0.18	=+B221*E$217						
	2000	0.23	=+B222*E$217						
	2500	0.27	=+B223*E$217						
	3000	0.32	=+B224*E$217						
	3500	0.36	=+B225*E$217						

OGTS Bypass External Convection and Thermal Radiation Coefficients

McAdams Free Convection Correlations for air at 1 atm. (Holman 1990, Table 7-2)						
Tw1 =	875	°F	Temperature End 1			
Tw2 =	250	°F	Temperature End 2			
Ts =	562.5	°F	Average Wall Temperature			
To =	115	°F	Ambient Temperature			
dT =	447.5	°F	Temperature difference			
h =	1.45	Btu/hr-ft^2-°F	Vertical Plane or Cylinder		h = 0.19 * dT^1/3	
h =	1.38	Btu/hr-ft^2-°F	Horizontal Cylinder		h = 0.18 * dT^1/3	
h =	1.68	Btu/hr-ft^2-°F	Horizontal Plate - heated face up		h = 0.22 * dT^1/3	
Forced convection, flow across a cylinder (Holman 1990, eqn. 6-21):						

$$\overline{Nu}_{f,D} = 0.3 + \frac{0.62 Re_D^{1/2} Pr^{1/3}}{[1+(0.4/Pr)^{2/3}]^{1/4}} \left[1+\left(\frac{Re_D}{282{,}000}\right)^{5/8}\right]^{4/5} \qquad Re_D \cdot Pr > 0.2$$

Nufd =	0.3+A*B/C	Forced Convection, Nusselt No.				
A =	$0.62 Re_d^{1/2} Pr^{1/3}$	B =	[1+(Red/282,000)^5/8]^4/5	C =	[1+(0.4/Pr)^2/3]^1/4	
D =	8.6	Inch	Dia of Pipe	0.21844	meters	
U =	0.1	Mph	Free Stream Air Vel.	0.0447	m/s	
Ts =	562.5	°F	Pipe Wall Temperature	294.72	°C	
To =	115	°F	Ambient Temperature	46.11	°C	
Tf =	338.75	°F	Air Film Temperature	170.42	°C	
vf =	0.00019	sq ft/sec	Viscosity of Air	1.8E-05	sq. m/s	
Red =	5.45844E+02	Dimensionless	Reynolds No.			
Pr =	0.7778	Dimensionless	Prandtl No.			
kf =	0.0146	Btu/hr-ft-°F	Thermal Conductivity	0.0253	W/m-°C	

OGTS Bypass External Convection and Thermal Radiation Coefficients

McAdams Free Convection Correlations for air at 1 atm. (Holman 1990, Table 7-2)

The dimensionless numbers are:

Nusselt, $\overline{Nu_L} = \frac{\overline{h_c} L}{k_f}$ or $\overline{Nu_D} = \frac{\overline{h_c} D}{k_f}$;

Rayleigh, $Ra_L = \frac{g \cdot \beta \cdot \rho \cdot c_p (\Delta T) L^3}{\nu \cdot k_f}$ or $Ra_D = \frac{g \cdot \beta \cdot \rho \cdot c_p (\Delta T) D^3}{\nu \cdot k_f}$;

Reynolds, $Re_L = \frac{VL}{\nu}$ or $Re_D = \frac{VD}{\nu}$;

Prandtl, $Pr = \frac{\nu \cdot \rho \cdot c_p}{k_f}$;

Red*Pr =	424.57					
A =	13.322	B =	1.016	C =	1.132	
Stefan B =	1.714E-09	Btu/hr-ft^2-R^4				
emiss =	0.65					
Nufd =	12.26	Dimensionless	Forced Convection, Nusselt No.			
Nund =	67.50	Dimensionless	Natural Convection, Nusselt No.			
Nut = 0.3 + [(Nufd- c)^j + (Nund - c)^j]^(1/j)			Combined Forced and Natural Convection, Nusselt No.			
c =	0.3	for Horizontal cylinder				
j =	4	for Horizontal cylinder				
Nut =	67.52	Dimensionless				
hc =	1.38	Btu/hr-sq.ft-°F	Combined Convection	hc =	7.81977	Watt/sq m-°C

OGTS Bypass External Convection and Thermal Radiation Coefficients

McAdams Free Convection Correlations for air at 1 atm. (Holman 1990, Table 7-2)						
Radiation component:			$h_r = \frac{\sigma\varepsilon(T_s^4 - T_0^4)}{T_s - T_0}$			
Stefan B =	1.714E-09	Btu/hr-ft^2-R^4				
emiss =	0.65					
hr =	2.45	Btu/hr-sq.ft-°F	Th Radiation Coefficient			
ht =	hc + hr		Total HT Coefficient			
ht =	3.83	Btu/hr-sq.ft-°F	Total HT Coefficient			
q =	1712.29	Btu/hr-sq.ft	Specific Heat Loss			
A =	2.25	sq. ft	for cylinder 1 ft long			
Q =	3855.18	Btu/hr	for cylinder 1 ft long			
Q =	1129.84	Watts	for cylinder 1 ft long			
Q =	1.13	KW	for cylinder 1 ft long			

	A	B	C	D	E	F	G	H
1	McAdams Free Convection Correlations							
2	Tw1 =	40	°F	Temperature End 1				
3	Tw2 =	20	°F	Temperature End 2				
4	Ts =	=(B2+B3)/2	°F	Average Wall Temperature				
5	To =	0	°F	Ambient Temperature				
6	dT =	=B4-B5	°F	Temperature difference				
7	h =	=0.19*B56^(1/3)	Btu/hr-ft^2-°F	Vertical Plane or Cylinder		h = 0.19 * dT^1/3		
8	h =	=0.18*B56^(1/3)	Btu/hr-ft^2-°F	Horizontal Cylinder		h = 0.18 * dT^1/3		
9	h =	=0.22*B56^(1/3)	Btu/hr-ft^2-°F	Horizontal Plate - heated face up		h = 0.22 * dT^1/3		
10								
11	Forced convection, flow across a cylinde							
12								
13								
14								
15								
16								
17	Nufd =	=0.3+A*B/C	Forced Convection, Nusselt N					
18	D =	8.6	inch	Dia of Pipe	=0.0254*B18	meters		
19	U =	0.1	mph	Free Stream Air Vel.	=0.44704*B19	m/s		
20	Ts =	=+B4	°F	Pipe Wall Temperature	=+(B20-32)/1.8	°C		
21	To =	=+B5	°F	Ambient Temperature	=+(B21-32)/1.8	°C		
22	Tf =	=+(B20+B21)/2	°F	Air Film Temperature	=+(B22-32)/1.8	°C		
23	vf =	=10.7639*E23	sq ft/sec	Viscosity of Air	0.00001789	sq. m/s		
24	Red =	=+E19*E18/E23	dimensionless	Reynolds No.				
25	Pr =	0.777826	dimensionless	Prandtl No.				
26	kf =	=0.577789*E26	Btu/hr-ft-°F	Thermal Conductivity	0.0253	W/m-°C		
27	Red*Pr =	=+B24*B25						
28								
29								
30								
31								
32								
33								
34								
35								
36								
37								
38								
39	A =	=0.62*B24^(1/2)*B25^(1/3)		B = =+(1+(B24/282000)^(5/8))^(4/5)		C = =+(1+(0.4/B25)^(2/3))^(1/4)		
40	Stefan B =	=0.000000001714	Btu/hr-ft^2-R^4					
41	emiss =	0.65						
42	Nufd =	=0.3+B39*D39/F39	dimensionless	Forced Convection, Nusselt No.				
43	Nund =	=+B8*B18/B26/12	dimensionless	Natural Convection, Nusselt No.				
44	Nut = 0.3 + [(Nufd- c)^j + (Nund - c)^j]^(1/			Combined Forced and Natural Convection, Nusselt				
45	c =	0.3	for Horizontal cylinder					
46	j =	4	for Horizontal cylinder					
47	Nut =	=+((B42-0.3)^4+(B43-0.3)^4)^(1/4)+0.3	dimensionless					
48	hc =	=+B47*B26/B18*12	Btu/hr-sq.ft-°F	Combied Convection		hc = =5.67826*B48	Watt/sq m-°C	
49								
50	Radiation component:							
51	Stefan B =	=0.000000001714	Btu/hr-ft^2-R^4					
52	emiss =	0.65						
53	hr =	=+B41*B40*((B20+460)^4-(B21+460)^4)/((B20+460)-(B21+460))	Btu/hr-sq.ft-°F	Th Radiation Coefficient				
54	ht =	hc + hr		Total HT Coefficient				
55	ht =	=+B53+B48	Btu/hr-sq.ft-°F	Total HT Coefficient				
56								
57	q =	=+B55*(B20-B21)	Btu/hr-sq.ft	Specific Heat Loss				
58	A =	=+PI()*B18/12	sq. ft	for cylinder 1 ft long				
59	Q =	=+B57*B58	Btu/hr	for cylinder 1 ft long				
60	Q =	=0.293071*B59	Watts	for cylinder 1 ft long				
61	Q =	=+B60/1000	KW	for cylinder 1 ft long				
62								
63								

The dimensionless numbers are:

Nusselt, $\overline{Nu_L} = \frac{\bar{h}_c L}{k_f}$ or $\overline{Nu_D} = \frac{\bar{h}_c D}{k_f}$;

Raylaigh, $Ra_L = \frac{g \cdot \beta \cdot \rho \cdot c_p (\Delta T) L^3}{\nu \cdot k_f}$ or $Ra_D = \frac{g \cdot \beta \cdot \rho \cdot c_p (\Delta T) D^3}{\nu \cdot k_f}$;

Reynolds, $Re_L = \frac{VL}{\nu}$ or $Re_D = \frac{VD}{\nu}$;

Prandtl, $Pr = \frac{\nu \cdot \rho \cdot c_p}{k_f}$;

$$\overline{Nu}_{f,D} = 0.3 + \frac{0.62 Re_D^{1/2} Pr^{1/3}}{[1 + (0.4/Pr)^{2/3}]^{1/4}} \left[1 + \left(\frac{Re_D}{282{,}000}\right)^{5/8}\right]^{4/5} \qquad Re_D \cdot Pr > 0.2$$

$$h_r = \frac{\sigma \varepsilon (T_s^4 - T_0^4)}{T_s - T_0}$$

	A	B	C	D	E	F	G	H
64		Heater Temperature	HEPA Filter					
65	Ambient Temperature	(36-N84-140) Outlet Temp	(36-D58-138) Inlet Temp	Heater (36-N84-140) Mass flow rate	Heat Input			
66	°F	°F	°F	lbm/hr	KWs			
67	0	25	13.4	3583	=+B67*D67*0.242*0.000293071/0.85			
68	0	50	25	3446	=+B68*D68*0.242*0.000293071/0.85			
69	0	100	45	3217	=+B69*D69*0.242*0.000293071/0.85			
70	0	250	84	2739	=+B70*D70*0.242*0.000293071/0.85			
71	0	300	96	2611	=+B71*D71*0.242*0.000293071/0.85			
72	0	400	102	2434	=+B72*D72*0.242*0.000293071/0.85			
73	0	500	118	2263	=+B73*D73*0.242*0.000293071/0.85			
74	0	=+SUM(LINEST(B67:B70,C67:C70)*{20,1})	20	=+SUM(LINEST(D67:D70,B67:B70)*{35.7,1})	=+B74*D74*0.242*0.000293071/0.85	Regression Value		
75								
76								
77	-25	50	13	3492	=+(B77-A77)*D77*0.242*0.000293071/0.85			
78	-25	100	36	3245	=+(B78-A78)*D78*0.242*0.000293071/0.85			
79	-25	150	45	3070	=+(B79-A79)*D79*0.242*0.000293071/0.85			
80	-25	0	-10	3778	=+(B80-A80)*D80*0.242*0.000293071/0.85			
81	-25	=+SUM(LINEST(B77:B80,C77:C80)*{-5,1})	-5	=+SUM(LINEST(D77:D80,B77:B80)*{8.1,1})	=+(B81-A81)*D81*0.242*0.000293071/0.85	Regression Value		
82								
83	115	150	127	2839	=+(B83-A83)*D83*0.242*0.000293071/0.85			
84	115	175	134	2762	=+(B84-A84)*D84*0.242*0.000293071/0.85			
85	115	200	140	2696	=+(B85-A85)*D85*0.242*0.000293071/0.85			
86	115	225	145	2635	=+(B86-A86)*D86*0.242*0.000293071/0.85			
87	115	=+SUM(LINEST(B83:B86,C83:C86,,)*{135,1})	135	=+SUM(LINEST(D83:D86,B83:B86)*{181.3,1})	=+(B87-A87)*D87*0.242*0.000293071/0.85	Regression Value		
88								
89								
90								

Subcontractor Calculation Review Checklist
DBVS OGTS Calculations

Subject: Off-Gas Treatment System By-Pass Thermal Hydraulic Analysis

The subject document has been reviewed by the undersigned.
The checker reviewed and verified the following items as applicable.

Documents Reviewed: 145570-D-CA-056, Rev 1, By-Pass Thermal Hydraulic Analysis

Analysis Performed By: AMEC

- Design Input
- Basic Assumptions
- Approach/Design Methodology
- Consistency with item or document supported by the calculation
- Conclusion/Results Interpretation
- Impact on existing requirements
- _____

Checker (printed name, signature, and date)

Lois Payne Lois L Payne 4/19/06

Organizational Manager (printed name, signature and date)

David H Shuford David H Shuford 4/20/06

This page intentionally left blank.

amec

CALCULATION SHEET

CALC. NO.: 145579-V-CA-004 **REV:** 1 **DATE:** March 7, 2005

CALC. TITLE: Off-Gas Chiller

PROJECT NO.: 145579 **PROJECT TITLE:** Final DBVS Design

Design Verification Required: ☐ Yes ☐ No

Calculation Type: ☐ Scoping ☒ Preliminary ☐ Final

Superseded by Calculation No.: ☐ Voided

ORIGINAL AND REVISED CALCULATIONS/ANALYSIS APPROVAL

REV.	ORIGINATOR:	DATE:	CHECKED:	DATE:	APPROVED:	DATE:
A	A. Prljincevic	16-Nov-04	N/A	N/A	F. Sweet	16-Nov-04
B	A. Prljincevic	03-Dec-04	N/A	N/A	F. Sweet	15-Dec-04
C	A. Prljincevic	20-Dec-04	S. Hamlyn	20-Dec-04	F. Sweet	20-Dec-04
0	A. Prljincevic	21-Feb-05	D. Williamson	21-Feb-05	F. Sweet	21-Feb-05
1	D. Williamson	7 March 05	A. Aurelt	07MAR05	F. Sweet	Mar 7/05

AFFECTED DOCUMENTS

DOCUMENT NUMBER:	TITLE:	REV. NO.:	DISC. LEAD INITIALS
145579-V-DS-011.1	Off Gas Chiller Skid Pump Data Sheet	0	
145579-V-DS-012	Off Gas Chiller Data Sheet	2	

RECORD OF REVISION

REV.	REASON FOR REVISION:
B	Supporting PFD added
C	Full Process Cooling Calculation and PFD added
0	Hand calculations done in MathCAD
1	Changes per RCR,

ATTACHMENTS

DOCUMENT NUMBER/ID:	TITLE:	TOTAL PAGES
Attachment 1	MathCAD Off-Gas Calculations	6
Attachment 2	Drawing: F-145579-00-A-0031 (Rev. D) Full Trailer Off-Gas Treatment (Tri-Mer Operating) Process Flow Diagram	1
Attachment 3	Drawing: F-145579-00-A-0022 (Rev. 0E) Full DBVS Trailer Off-Gas Treatment Process Flow Diagram	1
Attachment 4	Calculation 145579-V-CA-002, "Ductwork Pressures", Rev C, Attachment 2, Sheet 1 and 2	2
Attachment 5	Chilled Water/Glycol Schematic	1
Attachment 6	2001 ASHRAE Handbook - Fundamentals Pg 29.18-19	2
Attachment 7	1989 ASHRAE Handbook - Fundamentals Pg 33.2 & 4	2
Attachment 8	Data sheet 145579-V-DS-12.1, Appendix A, Pg 11-15 of 116, York International Selection Data Form 150.62-EG1 'Air-Cooled Scroll Chillers Style C YCAL0014 – YCAL0134'	5
Attachment 9	AIHTI, Heat Exchanger Catalogue, CS-STC Series, Pg 41-50	10

amec

CALCULATION SHEET

CALC. NO.:	145579-V-CA-004	REV:	1	DATE:	March 7, 2005
CALC. TITLE:	Off-Gas Chiller				
PROJECT NO.:	145579	PROJECT TITLE:	Final DBVS Design		

1 INTRODUCTION

1.1 PURPOSE

The purpose of this calculation is to determine the basis for Off-Gas Chiller cooling capacity and sizing and Off-Gas cooling system.

1.2 SCOPE

The scope of this calculation includes analysis of the cooling requirements of the heat exchanging equipment located in the existing off-gas trailer, which is the part of the Off-Gas System shown on Process Flow Diagrams (PDF).

1.3 DESIGN INPUTS

- DWG F-145579-00-A-0031 Rev D, *Full DBVS Trailer Off-Gas Treatment (Tri-Mer®[1] Operating) Process Flow Diagram*
- DWG F-145579-00-A-0022 Rev 0E, *Full DBVS Trailer Off-Gas Treatment (Full Flow Operation) Process Flow Diagram*
- Chilled Water/Glycol Schematic *(Attachment 5)*
- Calculation 145579-V-CA-002, "Ductwork Pressures."

1.4 CRITERIA

No external criteria referenced.

2 ASSUMPTIONS

The following assumption is used in this calculation and within the body of the calculation and attachments.

1. During the Full DBVS, and when the Tri-Mer® is operating, the Off Gas temperature changes through wet scrubber, between stream 19 and 29.

[1] Tri-Mer® is a registered trademark of Tri-Mer Corporation.

ORIGINATOR:	DATE:	CHECKER:	DATE:
DW	7 March 05		7 MAR 05

amec

CALCULATION SHEET

CALC. NO.:	145579-V-CA-004	REV:	1	DATE:	March 7, 2005
CALC. TITLE:	Off-Gas Chiller				
PROJECT NO.:	145579	PROJECT TITLE:	Final DBVS Design		

2. The cooling required is the capacity for sufficient heat removal in order to cool the air from stream #19 temperature to stream #29 temperature.

3. Since the vendor data is not available heat exchanger is assumed to be the type in attachment 9 with pressure drop of 5 psi.

4. Pipe length is to be 100ft.

5. Static lift (elevation difference) is to be no greater than 10ft.

6. Chiller temperature differential is 10°R as suggested, with engineering judgment (as being most common and efficient), by York International, Attachment 8.

3 METHOD OF ANALYSIS

Calculations were performed using a handheld calculator and later done again using MathCAD software.

4 RESULTS AND CONCLUSIONS

- Required cooling capacity is when Full Process is on: 32.25 tons
- Selected chiller rated capacity: 40.8 tons
- Required pump flow rate: 87.73 GPM
- Required total dynamic head: 44.7 ft-water.

5 REFERENCES

1. 2001 ASHRAE Handbook – Fundamentals.

2. York International, Form 150.62-E61 'Air-Cooled Scroll Chillers Style C YCAL0014 – YCAL0134', 'Selection Data'.

3. 1989 ASHRAE Handbook – Fundamentals.

4. "CS-STC Fixed Tube Bundle/ Liquid Cooled Heat Exchangers", American Industrial Heat Transfer, Inc., Copyright 2004.

ORIGINATOR:	DATE:	CHECKER:	DATE:
[signature]	7 March 05	[signature]	07 MAR 05

145579-V-CA-004

Attachment 1

MathCAD Off-Gas Calculations

amec

CALCULATION SHEET

Project Number: 145579

Originator: DCO
Date: March 7, 05
Checker:
Date: 07 MAR 05

Calculation No.
145579-V-CA-004
Rev. No. 1
Calculation Title
Off-Gas Chiller Calculation

MathCAD Unit Setup:

Due to the lack of incorperated units the following relationships must be specified to aid in further analysis.

KiloJoules:	$kJ := 1000joule$	
Tonn of Heating Capacity:	$Tonn := 12000\frac{BTU}{hr}$	$1Tonn = 3.517kW$
Inches of Water:	$inH2O := 249Pa$	$1psi = 27.69inH2O$
Feet of Water:	$ftH2O := 12inH2O$	
Flow Rate:	$\frac{m^3}{sec} = 35.31\frac{ft^3}{sec}$	
Density:	$\frac{kg}{m^3} = 0.0624\frac{lb}{ft^3}$	
Specific Heat:	$\frac{kJ}{kg\cdot K} = 0.239\frac{BTU}{lb\cdot R}$	
Temperature:	$K = 1.8R$	
Heat Capacity:	$\frac{kJ}{kg} = 0.43\frac{BTU}{lb}$	
Volume:	$gal = 0.134ft^3$	
Acceleration due to Gravity:	$g = 32.17\frac{ft}{sec^2}$	

1. Cooling Requirement

1.1 TRI-MER OPERATING (Attachment 2)

- **Sensible Heat:**
(Equation 22, Ch 29, Ref. 1)

$$q_{st} := \delta\cdot(C_A + C_V\cdot W)\cdot Q_s\cdot\Delta T$$

Standard Flow Rate:
(Mass Based SCFM, Stream 29, Tri-Mer Operation, Attachment 4)

$$Q_s := 657\frac{ft^3}{min} \qquad Q_s = 0.31\frac{m^3}{sec}$$

Standard Air Density:

$$\delta := 1.2\frac{kg}{m^3} \qquad \delta = 0.07\frac{lb}{ft^3}$$

amec

CALCULATION SHEET

Project Number: 145579

Originator: DW
Date: March 7, 05
Checker: [illegible]
Date: 07 MAR 05

Calculation No.
145579-V-CA-004
Rev. No. 1
Calculation Title
Off-Gas Chiller Calculation

Specific Heat of Dry Air: $C_A := 1.006 \frac{kJ}{kg \cdot K}$ $C_A = 0.24 \frac{BTU}{lb \cdot R}$

Specific Heat of Vapour: $C_V := 1.84 \frac{kJ}{kg \cdot K}$ $C_V = 0.44 \frac{BTU}{lb \cdot R}$

Humidity Ratio:
(H20 Mass Flow to Air Mass Flow Ratio from Attatchment 2 Stream 29) $W := \frac{53}{2891}$ $W = 0.018$

Dry Bulb Temperature Difference:
(Between Stream 19 and Stream 29, Attachment 2) $\Delta T := (304 - 85)R$ $\Delta T = 219\,R$

Sensible Heat:
(Equation 22, Ch 29, Ref. 1) $q_{st} := \delta \cdot (C_A + C_V \cdot W) \cdot Q_s \cdot \Delta T$

$q_{st} = 47.07\,kW$ $q_{st} = 13.38\,Tonn$

- **Latent Heat:**
(Equation 24, Ch 29, Ref 1) $q_{lt} := \delta \cdot \Delta q \cdot Q_s \cdot \Delta W$

Change in Humidy Ratio:
(Difference of H20 Mass Flow in stream 29 to stream 19 over Air Mass Flow, Attatchment 2) $\Delta W := \frac{53 - 7}{2897}$ $\Delta W = 0.016$

Approximate heat content of 50%RN less heat content of the water at condensate temperature
(Standard Conditions) $\Delta q := 2500 \frac{kJ}{kg}$ $\Delta q = 1074.81 \frac{BTU}{lb}$

Latent Heat:
(Equation 24, Ch 29, Ref 1) $q_{lt} := \delta \cdot \Delta q \cdot Q_s \cdot \Delta W$

$q_{lt} = 14.77\,kW$ $q_{lt} = 4.2\,Tonn$

- **Total Cooling:** Tri-mer Operating $qtot_{tri} := q_{st} + q_{lt}$ $qtot_{tri} = 61.84\,kW$

$qtot_{tri} = 17.58\,Tonn$

1.2 FULL PROCESS (Attachment 3)

- **Sensible Heat:**
(Equation 22, Ch 29, Ref. 1) $q_{sf} := \delta \cdot (C_A + C_V \cdot W) \cdot Q_s \cdot \Delta T$

Standard Flow:
(Mass Based SCFM, Full Flow, $Q_s := 2874 \frac{ft^3}{min}$ $Q_s = 1.356 \frac{m^3}{sec}$

amec

CALCULATION SHEET

Project Number: 145579

Originator: DW
Date: March 7, 05
Checker: JH
Date: 07MA05

Calculation No.
145579-V-CA-004
Rev. No. 1
Calculation Title
Off-Gas Chiller Calculation

Stream 29, Attachment 4)

Standard Air Density: $\delta := 1.2\frac{kg}{m^3}$ $\delta = 0.07\frac{lb}{ft^3}$

Specific Heat of Dry Air: $C_A := 1.006\frac{kJ}{kg \cdot K}$ $C_A = 0.24\frac{BTU}{lb \cdot R}$

Specific Heat of Vapour: $C_V := 1.84\frac{kJ}{kg \cdot K}$ $C_V = 0.44\frac{BTU}{lb \cdot R}$

Humidity Ratio:
(H20 Mass Flow to Air Mass Flow Ratio from Attatchment 3 Stream 29) $W := \frac{202}{12628}$ $W = 0.02$

Dry Bulb Temperature Difference:
(Between Stream 19 and Stream 29, Attachment3) $\Delta T := (134 - 80)R$ $\Delta T = 30K$

Sensible Heat:
(Equation 22, Ch 29, Ref. 1) $q_{sf} := \delta \cdot (C_A + C_V \cdot W) \cdot Q_s \cdot \Delta T$

$q_{sf} = 50.56kW$ $q_{sf} = 14.38Tonn$

- **Latent Heat:**
(Equation 24, Ch 29, Ref 1) $q_{lf} := \delta \cdot \Delta q \cdot Q_s \cdot \Delta W$

Change in Humidy Ratio:
(Difference of H20 Mass Flow in stream 29 to stream 19 over Air Mass Flow, Attatchment 3) $\Delta W := \frac{202 - 6.9}{12628}$ $\Delta W = 0.015$

Approximate heat content of 50%RN less heat content of the water at condensate temperature
(Standard Conditions) $\Delta q := 2500\frac{kJ}{kg}$ $\Delta q = 1074.81\frac{BTU}{lb}$

Latent Heat:
(Equation 24, Ch 29, Ref 1) $q_{lf} := \delta \cdot \Delta q \cdot Q_s \cdot \Delta W$

$q_{lf} = 62.87kW$ $q_{lf} = 17.88Tonn$

- **Total Cooling:** Full Process $qtot_{full} := q_{sf} + q_{lf}$ $qtot_{full} = 113.43kW$

$qtot_{full} = 32.25Tonn$

Cooling Required:

amec

CALCULATION SHEET

Project Number: 145579

Page 4 of 6

Originator: DW
Date: 7 march 05
Checker: [illegible]
Date: 07 MAR 05

Calculation No.
145579-V-CA-004
Rev. No. 1
Calculation Title
Off-Gas Chiller Calculation

$qtot_{tri} = 17.58\,Tonn$

$qtot_{full} = 32.25\,Tonn$

Because $qtot_{full} > qtot_{tri}$ $\quad q_{required} := qtot_{full}$

$q_{required} = 32.25\,Tonn$

2. Equipment Selection

York air cooled scroll chiller will be selected to cool propylene glycol/water 50% by weight solution, with freezing point of -25 F.

Selection:
Type: YCAL0042EC
Rated Capacity: 40.8 Tonn
Input Power: 57 kW
Equipment selection, performance data and correction factors are per:

"York International" Form 150.62-E61 'Selection Data'

-Capacity Correction for Proplyene: $Q_{rated} := 40.8Tonn$ $\quad P_{input} := 57kW$

Efficiency: $Eff := \frac{TONN}{KW}$ $\quad Eff := 0.928$ (50%)

$Q := Q_{rated} \cdot Eff$ $\quad Q = 37.86\,Tonn$

Input Power: $KW := \frac{q_{required}}{Q} \cdot P_{input} \cdot Eff$

$KW = 45.06\,kW$

-Flow Through Chiller (Cooling Fluid)

GPM formula: (Ref 2) $GPM := \frac{q_{required} \cdot GF}{\Delta T}$

GPM F/TON Factor: (Ref 2) $GF := 27.2 \frac{gal}{min} \cdot \frac{R}{Tonn}$

Temperature Range: (Assumption 6) $\Delta T := 10R$ Temperature range is selected as sugested, with engineering judgement (as being most common and efficient), by "York

amec

CALCULATION SHEET

Project Number: 145579

Originator: DW
Date: 7 March 05
Checker: GH
Date: 07MAR05

Calculation No.
145579-V-CA-004
Rev. No. 1
Calculation Title
Off-Gas Chiller Calculation

$$GPM := \frac{q_{required} \cdot GF}{\Delta T}$$ International" 'Selection Data'.

$$GPM = 87.73 \frac{gal}{min}$$

3. Pump Selection Calculation

Off-Gas Chiller Calculation (145579-V-CA-004) to be Revised

3.1 PROPLYENE GLYCOL PRESSURE DROP CORRECTION FACTOR
50% by weight mixture

Cooler Pressure Drop Correction Factor for Proplyene Glycol/Water: (Data Sheet 145579-V-DS-12.1, Appendix A, Page 11 of 116.) $\Delta Pf := 1.247$

3.2 EQUIPMENT PRESSURE LOSS

3.2.1 Cooler Pressure Drop

Flow Rate: (From Section 2 of this calculation) $GPM = 87.73 \frac{gal}{min}$

Pressure Drop: (From Cooler Curves, Pg 14 of 114) $\Delta P := 6.5 ftH2O$

Cooler Pressure Drop (factored): $\Delta P_{cooler} := \Delta P \cdot \Delta Pf$ $\Delta P_{cooler} = 8.11\ ftH2O$

3.2.2 Scrubber #1 - Heat Exchanger Pressure Drop

Scrubber Pressure Drop: (Assumption 3) $\Delta P := 5psi$ $\Delta P = 11.54\ ftH2O$

Heat Exchanger Pressure Drop: (Conservative Approach,corrected for proplyene glycol) $\Delta P_{hex} := \Delta P \cdot \Delta Pf$ $\Delta P_{hex} = 14.39\ ftH2O$

3.3 PIPING AND VALVES

Head Loss: (ASHRAE Fundamentals) $\Delta H_l := k \cdot \frac{V^2}{2 \cdot g}$

Table 2 - K factors for welded pipe fittings:
(2001 ASHRAE Fundamentals Handbook)
Pipe Diameter: $D := 3in$

amec

CALCULATION SHEET

Project Number: 145579

Page 6 of 6

Originator: DCO
Date: March 7, 05
Checker: HH
Date: 07MAR05

Calculation No.
145579-V-CA-004
Rev. No. 1
Calculation Title
Off-Gas Chiller Calculation

90 deg Elbow: $k_{elb} := .34$

Globe Valve: $k_{globe} := 7$

Swing Check Valve: $k_{swing} := 2.0$

Pipes & valves are sized as per guidlines in Ch. 35 'Pipe Sizing' of 2001 ASHRAE.

Volume Flow Rate: $GPM = 87.73 \frac{gal}{min}$

Flow Velocity: $V := \frac{4 \cdot GPM}{\pi D^2}$ $\quad V = 3.98 \frac{ft}{sec}$

Fittings & Valves (Attachment 5)
10 x 90 degree Elbows
4 x Globe valves
4 x Swinging Check Valves

Sum of k factors: $k := 10 \cdot k_{elb} + 4 \cdot k_{globe} + 4 \cdot k_{swing}$ $\quad k = 39.4$

Head Loss: $\Delta H_1 := k \cdot \frac{V^2}{2 \cdot g}$ $\quad \Delta H_1 = 9.71\ ft$

Pipe Losses:
(1989 ASHRAE Fundamentals Handbook, Pg 33.4, Fig 16.1)
$H_{pipe} := \frac{2.5ft}{100ft}$ (For commercial pipe, Sch 40)

Pipe Length:
(Assumption 4)
$L_{pipe} := 100ft$

$\Delta H_2 := H_{pipe} \cdot L_{pipe}$

Pipe Loss: $\Delta H_2 = 2.5\ ft$

Total Pipe & Fitting Losses: $\Delta H_{loss} := \Delta H_1 + \Delta H_2 + \frac{(\Delta P_{hex} + \Delta P_{cooler}) \cdot ft}{ftH2O}$

$\Delta H_{loss} = 34.7\ ft$

Total Required Static Head:

Heat exchanger may be elevated up to 10 ft:
(Assumption 5)
$H_{static} := 10ft$

Total Required Head: $\Delta H := \Delta H_{loss} + H_{static}$

$\boxed{\Delta H = 44.7\ ft}$

145579-V-CA-004

Attachment 2

F-145579-00-A-0031

Full Trailer Off-Gas Treatment (Tri-Mer Operating) Process Flow Diagram

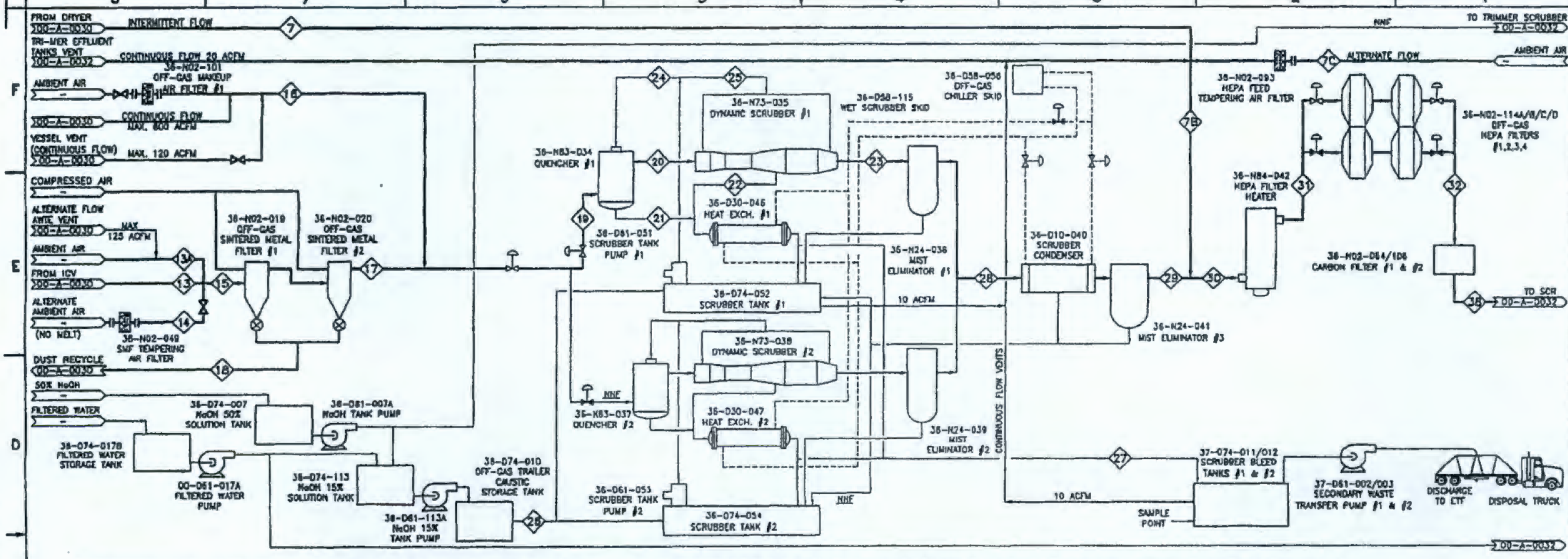

STREAM No.	UNITS	7	7B	7C	13	13A	14	15	16
STREAM NAME		DRYER AIR	DILUTION AIR	DILUTION AIR	ICV OFF-GAS	COOLING ICV AIR	ALTERNATE AIR (MELT OFF)	DILUTED AND COOLED ICV OFF-GAS	SCRUBBER AIR DILUTION
PHASE		GAS	GAS	GAS	GAS	GAS	GAS	GAS	GAS
CONTINUOUS MASS FLOWRATE	lb/hr	1100	1100	1100	813	349	728	861	1139
CONT. VOL. FLOW RATE (LIQ/GAS)	GPM/ACFM	310	310	310	283	80	166	371	258
BATCH VOLUME	USG/ACF	144799	148799	148799	3305163	858479	1990070	4471846	3111448
BATCH MASS	lb	8435	8435	8655	103143	70178	143891	173143	228892
BATCH TRANSFER TIME	hr	8	139	139	139	139	82	139	139
BATCH VOLUME FLOW	USGPM/ACFM	310	446	446	407	115	337	837	373
BATCH MASS FLOW	lb/hr	1082	1064	1064	742	505	2333	1248	1647
DESIGN FACTOR	DIMENSIONLESS	1	1	1	1	1	1	1	1
DESIGN VOLUME FLOW	USGPM/ACFM	310	446	446	407	115	837	837	373
DESIGN MASS FLOW	lb/hr	1092	1064	1564	742	509	2333	1246	1647
SpG		0.001	0.001	0.001	0.0009	0.001	0.001	0.001	0.001
SpG (BULK SOLIDS ONLY)									
GAS PRESSURE	in. WG	-15	-15	-15	-2.87	-2.99	-2.99	-2.99	0
TEMPERATURE	°F	140	77	77	878	77	77	873	77
H2O LIQUID	lb/hr								
H2O Gas	lb/hr				7			7	
FEED Hg	lb/hr				0.72			0.77	
SO2 GAS	ppmV				1227			721	
NOx GAS	ppmV				144582			87324	
HCl GAS	ppmV				119			70	
137Cs	Ci/hr				1.6E-02	0.0E+00	0.00E+00	1.6E-02	0.0E+00
90Sr	Ci/hr				8.2E-04	0.0E+00	0.00E+00	8.2E-04	0.0E+00
99Tc	Ci/hr				8.0E-08	0.0E+00	0.00E+00	8.0E-08	0.0E+00
129I	Ci/hr				1.8E-05	0.0E+00	0.00E+00	1.8E-05	0.0E+00

STREAM No.	17	18	19	20	21	22	23	24	25	26	27
STREAM NAME	FILTERED OFF-GAS	DUST RECYCLE	QUENCH FEED	QUENCHER DISCHARGE	QUENCH RETURN	SCRUB RETURN	SCRUB DISCHARGE	QUENCH SOLUTION	SCRUB SOLUTION	CAUSTIC MAKE-UP	SCRUB RETURN BLEED
PHASE	GAS	SOLID	GAS	GAS	LIQUID	LIQUID	GAS	LIQUID	LIQUID	LIQUID	LIQUID
CONTINUOUS MASS FLOWRATE	858	5.0	1995	2035	5305	10726	2000	5344	10488	543	541
CONT. VOL. FLOW RATE (LIQ/GAS)	375		634	490	19	9	482.05	10	20	1.0	1
BATCH VOLUME	4526188	47	7641448	5811421	228411	111518	5813534	120847	241094	12053	12214
BATCH MASS	172144	1004	401036	408935	1064233	2130891	401893	1074170	2146338	109182	108817
BATCH TRANSFER TIME	139	139	136	139	139	138	139	138	138	139	139
BATCH VOLUME FLOW	543	0.01	852	709	27.5	13.4	687	14.45	28.9	1.4	1.5
BATCH MASS FLOW	1238	7.2	2885	2942	7671	15510	2891	7728	15456	785	783
DESIGN FACTOR	1	1	1	1	1	1	1	1	1	1	1
DESIGN VOLUME FLOW	543		852	709	27.5	13.4	687	14.45	28.9	1.45	1.5
DESIGN MASS FLOW	1238	7.2	2885	2942	7671	15510	2891	7728	15458	786	783
SpG	0.001	2.64	0.001	0.001	1.06	1.1	0.00111	1.1	1.1	1.1	1.1
SpG (BULK SOLIDS ONLY)											
GAS PRESSURE	-7.56	n/a	-7.62	-7.74	n/a	n/a	-14.76	n/a	n/a	n/a	n/a
TEMPERATURE	873	873	304	83.5	87.3	84	86	79	74	104	77
H2O LIQUID				0.4	4430	9015	0.0000	4487	8993	489	454
H2O Gas	7		7	70			53				
FEED Hg		0.75									
SO2 GAS	715		308	178			80				
NOx GAS	87568		37302	32235			28560				
HCl GAS	70		30	13			8				
137Cs	4.6E-08	1.5E-02	4.6E-08	4.8E-07	2.5E-05	8.7E-05	4.6E-08	4.3E-05	8.7E-05	0.0E+00	4.6E-04
90Sr	1.8E-07	8.2E-04	1.8E-07	1.8E-08	1.8E-06	3.6E-06	1.8E-08	1.7E-06	3.5E-06	0.0E+00	1.8E-07
99Tc	2.7E-11	8.0E-08	2.7E-11	2.7E-12	2.4E-10	5.1E-10	2.7E-13	2.5E-10	5.1E-10	0.0E+00	2.7E-11
129I	5.5E-09	1.8E-05	5.5E-08	5.5E-10	5.7E-08	1.0E-07	8.5E-11	5.3E-08	1.0E-07	0.0E+00	8.5E-09

STREAM No.	28	29	30	31	32	38
STREAM NAME	CONDENSER FEED	MIST ELIMINATOR #3 DISCHARGE	HEATER FEED	HEPA FEED	C-FILTER INLET	C-FILTER DISCHARGE
PHASE	GAS	GAS	GAS	GAS	GAS	GAS
CONTINUOUS MASS FLOWRATE	2000	2000	3100	3100	3100	3100
CONT. VOL. FLOW RATE (LIQ/GAS)	482.18	483.4	780	850	854.2	856.3
BATCH VOLUME	5814872	5818078	9409134	10317020	10322183	10324686
BATCH MASS	401893	401893	619320	619320	619320	619107
BATCH TRANSFER TIME	138	138	139	139	139	139
BATCH VOLUME FLOW	687	698	1128	1237	1238	1238
BATCH MASS FLOW	2891	2891	4453.8	4458	4459	4454
DESIGN FACTOR	1	1	1	1	1	1
DESIGN VOLUME FLOW	687	698	1128	1237	1238	1238
DESIGN MASS FLOW	2891	2891	4488	4468	4454	4454
SpG	0.00111	0.00111	0.00108	0.00098	0.00098	0.001
SpG (BULK SOLIDS ONLY)						
GAS PRESSURE	-14.83	-15.07	-15.15	-15.39	-15.62	-15.84
TEMPERATURE	85	83	123	167	167	167
H2O LIQUID	0.2	0.2				
H2O Gas	53	53	53	53	53	53
FEED Hg						
SO2 GAS	91	91	58	58	58	58
NOx GAS	29651	29651	18315	18315	18315	18315
HCl GAS	8	8	6	6	6	6
137Cs	4.6E-08	4.6E-08	4.6E-08	4.6E-08	4.6E-10	4.6E-10
90Sr	1.8E-09	1.8E-09	1.8E-08	1.8E-08	1.8E-11	1.8E-11
99Tc	2.7E-13	2.7E-13	2.7E-13	2.7E-12	2.7E-15	2.7E-15
129I	5.5E-11	5.5E-11	5.5E-11	5.5E-11	5.5E-11	5.5E-13

THIS DRAWING CONTAINS PROCESS INFORMATION THAT IS PROPRIETARY TO AMEC. RESTRICTIONS ON USE OF THIS INFORMATION ARE CONTAINED IN CONTRACT #23410 BETWEEN AMEC AND CH2M HILL HANFORD GROUP.

GENERAL NOTES

1. VALVES ARE SHOWN TO INDICATE PROCESS INTENT.
2. NNF - NORMALLY NO FLOW

LINES LEGEND:

MAJOR PROCESS STREAM

MIN…

IN…

Attachment:	2
Calc. No.:	145579-V-CA-004
Rev. No.:	1
Sheet	1 of 1
Originator:	DW
Date:	March 7, 05
Checked by:	[signature]
Date:	07 MAR 05

REV	REVISION DESCRIPTION	DATE
0	ISSUED FOR CLIENT APPROVAL & BOE REPORT	21 JAN 05
C	GENERAL REVISIONS ISSUED FOR CLIENT COMMENT	16 DEC 04
B	GENERAL REVISIONS, ISSUED FOR INTERNAL REVIEW	30 NOV 04
A	ISSUED FOR REVIEW	07 SEPT 04

F-145579-00-A-0031 D

U.S. DEPARTMENT OF ENERGY

Office of River Protection

amec

FULL DVBS TRAILER OFF-GAS TREATMENT (TRI-MER OPERATING) PROCESS FLOW DIAGRAM

145579-V-CA-004

Attachment 3

F-145579-00-A-0022

Full DBVS Trailer Off-Gas Treatment Process Flow Diagram

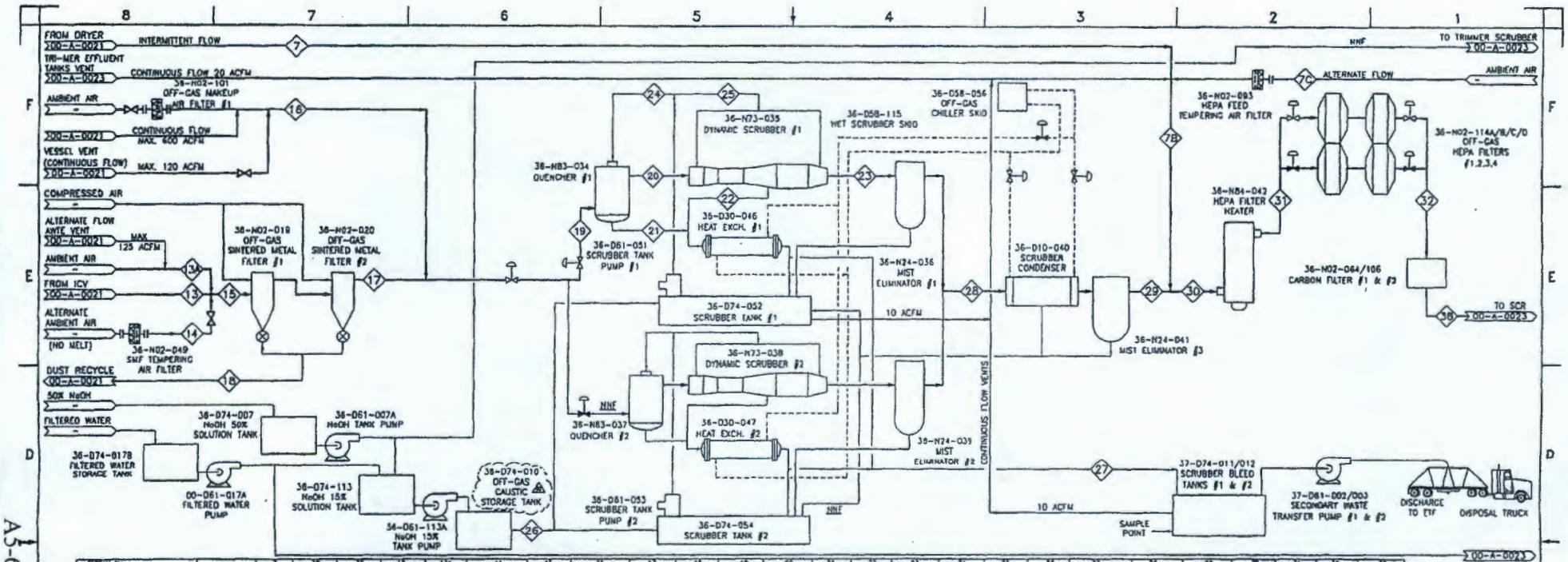

STREAM No.		7	7B	7C	13	13A	14	15	16	17	18	19	20
STREAM NAME	UNITS	DRYER AIR	QUENCH AIR	BLEEDOW AIR	ICV OFF-GAS	COOLING ICV AIR	ALTERNATE AIR (MELT OFF)	ICV OFF-GAS	SCRUBBER AIR DILUTION	FILTERED OFF-GAS	DUST RECYCLE	QUENCH FEED	QUENCHER DISCHARGE
PHASE		GAS	GAS	GAS	GAS	GAS	GAS	GAS	GAS	GAS	SOLID	GAS	GAS
CONTINUOUS MASS FLOWRATE	lb/hr	898	898	898	513	350	727	843	7744	858	3.0	6603	8734
CONT. VOL. FLOW RATE (LIQ/GAS)	CFM/ACFM	845	845	448	211	80	164	371	1800	350	0.004	2188	2073
BATCH VOLUME	USG/ACF	214068	214068	306348	3384751	880533	1485889	4474876	31704094	4588462	27	28171151.7	34895703
BATCH MASS	lb	10333	10333	7148	183185	70274	148030	173448	1554519	172438	125	1728884	1755459
BATCH TRANSFER TIME	hr	8	8	138	139	139	83	138	138	138	138	138	138
BATCH VOLUME FLOW	USGPM/ACFM	845	845	845	407	115	537	537	2803	550	0.01	3133	3997
BATCH MASS FLOW	lb/hr	1296	1296	1296	741	508	2335	1248	11158	1241	7.2	12439	12639
DESIGN FACTOR	DIMENSIONLESS	1	1	1	1	1	1	1	1	1	1	1	1
DESIGN VOLUME FLOW	USGPM/ACFM	845	845	845	407	115	537	537	2803	550	0.01	3133	3997
DESIGN MASS FLOW	lb/hr	1296	1296	898	741	508	2335	1248	11158	1241	7.2	12439	12639
Sp.Gr.		0.001	0.001	0.001	0.0005	0.001	0.001	0.001	0.001	0.001	2.54	0.001	0.001
Sp.G (BULK SOLIDS ONLY)											1.5		
PRESSURE	in. WG	-18.38	-18.38	0	-2.5	0	-2.1	-2.6	-18.3	-12.6	n/a	-13.6	-15.6
TEMPERATURE	F	485	485	77	878	77	77	573	77	313	313	134	75.3
VFD LOADS	lb/hr												8.7
FGD Dmr	lb/hr				8.5			8.8		6.5		8.8	169
FEED Rate	lb/hr				8.75			6.37			0.74	0	0
SOX GAS	ppmV				1339			721		733		31	21
NOx GAS	ppmV				148318			87219		87514		8898	7848
TOC GAS	ppmV				119			26		20		7	1.5
137Cs	Ci/hr				1.3E-02	0.0E+00	0.0E+00	1.3E-02	0.0E+00	6.8E-06	1.5E-02	6.8E-08	4.8E-07
85Kr	Ci/hr				6.3E-04	0.0E+00	0.0E+00	4.3E-04	0.0E+00	1.8E-07	8.3E-04	1.8E-07	1.8E-08
TRU	Ci/hr				8.9E-06	0.0E+00	0.0E+00	6.0E-06	0.0E+00	2.8E-11	9.0E-08	3.7E-11	2.7E-12
129I	Ci/hr				1.8E-05	0.0E+00	0.0E+00	1.8E-05	0.0E+00	5.5E-09	1.0E-05	5.5E-09	5.5E-10

STREAM No.		21	22	23	24	25	26	27	28	29	30	31	32	33
STREAM NAME	UNITS	QUENCH RECIRCULATION	SCRUB RECIRCULATION	SCRUB DISCHARGE	QUENCH SOLUTION	SCRUB SOLUTION	CAUSTIC MAKE-UP	SCRUB RETURN BLEED	CONDENSER FEED	CONDENSER DISCHARGE	HEATER FEED	HEPA FEED	C-FILTER INLET	C-FILTER DISCHARGE
PHASE		LIQUID	LIQUID	GAS	LIQUID	LIQUID	LIQUID	LIQUID	GAS	GAS	GAS	GAS	GAS	GAS
CONTINUOUS MASS FLOWRATE	lb/hr	5281	10833	8733	5416	10832	756	835	8733	8733	8878	8839	8828	8829
CONT. VOL. FLOW RATE (LIQ/GAS)	CFM/ACFM	19	9.2	2443	16	29	1.4	1.3	2442	2328	2841	3248	3333	3379
BATCH VOLUME	USG/ACF	230411	111519	29456957	120547	241084	16840	14178	29589913	30482770	35473828	34407088	48196690	40745074
BATCH MASS	lb	1031128	2177402	1735291	1508817	2177234	152983	127837	1735581	1755291	1835408	1835408	1835408	1835388
BATCH TRANSFER TIME	hr	138	138	138	139	139	139	138	138	138	138	138	138	138
BATCH VOLUME FLOW	USGPM/ACFM	27.5	13.4	3533	14.5	26.9	2.0	1.7	3580	3453	4253	4196	4816	4886
BATCH MASS FLOW	lb/hr	7641	15665	12628	7832	15664	1108	918	12528	12838	13924	13424	13924	13934
DESIGN FACTOR	DIMENSIONLESS	1	1	1	1	1	1	1	1	1	1	1	1	1
DESIGN VOLUME FLOW	USGPM/ACFM	27.5	13.4	3533	14.5	26	2.0	1.7	3580	3453	4753	4735	4819	4886
DESIGN MASS FLOW	lb/hr	7641	15665	12628	7832	15664	1108	918	12528	12838	13924	13924	13924	13934
Sp.G		1.04	1.1	0.001	1.1	1.1	1.1	1.1	0.001	0.001	0.001	0.001	0.001	0.001
Sp.G (BULK SOLIDS ONLY)														
PRESSURE	in. WG	n/a	n/a	-21.6	n/a	n/a	n/a	n/a	-74.1	-87.8	-87.6	-85.3	-91.4	-95.8
TEMPERATURE	F	75.3	85	80	78	78	104	79	80	80	131	183	183	183
VFD LOADS	lb/hr	8.7	8.2	0.0	43.3	87.6	88.8	87.1	0.0	0.0				
FGD Dmr	lb/hr			202					202	202	201	201	201	201
FEED Rate	lb/hr			0					0					
SOX GAS	ppmV			2					2	2	2	2	2	2
NOx GAS	ppmV			6022					6022	6022	5428	5408	5428	5428
TOC GAS	ppmV			0.3					0.2	0.3	0.3	0.3	0.3	0.3
137Cs	Ci/hr			4.8E-08	3.7E-05	7.4E-05	8.0E-06	4.8E-06	4.8E-08	4.8E-08	4.8E-08	4.8E-08	4.8E-10	4.8E-10
85Kr	Ci/hr			1.8E-06	1.5E-06	3.0E-06	0.9E-06	1.8E-07	1.8E-06	1.8E-06	1.8E-06	1.8E-06	1.8E-11	1.8E-11
TRU	Ci/hr			2.7E-13	5.2E-10	4.4E-10	0.0E+00	2.7E-11	2.7E-13	2.7E-13	2.7E-13	2.7E-13	2.7E-15	2.7E-15
129I	Ci/hr			5.5E-11	4.4E-08	8.9E-08	0.0E+00	5.5E-08	5.5E-11	5.5E-11	5.5E-11	5.5E-11	5.5E-11	5.5E-13

Rev.	Revision Description	Date	By	Chk'd	Appd	Date
0E	ISSUED FOR CLIENT APPROVAL & 60% REPORT	17 FEB 03	SB	LAG	KB	FH
0D	ISSUED FOR CLIENT APPROVAL & 60% REPORT	11 FEB 03	SB	LAG	KB	FH
0C	ISSUED FOR CLIENT APPROVAL & 60% REPORT	31 JAN 03	SB	LAG	KB	FH
0B	GENERAL REVISIONS ISSUED FOR CLIENT COMMENT	16 DEC 02	SB	LAG	KB	FH
0A	GENERAL REVISIONS, ISSUED FOR INTERNAL REVIEW	19 NOV 02	SB	LAG	KB	FH
0	FOR CONSTRUCTION	08 AUG 02	SB	LAG	KB	FH
E	FORMERLY F-143643-00-A-0022, FOR APPROVAL	24 JULY 02	SB	LAG	KB	FH
B	FINAL ISSUE	14 APR 02	SB	LAG	KB	FH
A	ISSUED FOR CLIENT COMMENT	18 MAR 02	BLK		KB	FH

F-145579-00-A-0022 0E

U.S. DEPARTMENT OF ENERGY
Office of Environmental Management

amec

FULL DBVS TRAILER OFF-GAS TREATMENT PROCESS FLOW DIAGRAM

THIS DRAWING CONTAINS PROCESS INFORMATION THAT IS PROPRIETARY TO AMEC. RESTRICTIONS ON USE OF THIS INFORMATION ARE CONTAINED IN CONTRACT #23410 BETWEEN AMEC AND CH2M HILL HANFORD GROUP.

GENERAL NOTES

1. VALVES ARE SHOWN TO INDICATE PROCESS INTENT.
2. NNF - NORMALLY NO FLOW

LINES LEGEND:

- MAJOR PROCESS STREAM
- MINOR PROCESS STREAM
- INTERMITTENT FLOWS

Attachment: 3
Calc. No.: 145579-V-CA-004
Rev. No.: 1
Sheet 1 of 1

Originator: DW
Date: March 7, 05
Checked by: SB
Date: 07 MAR 05

A5-649

RPP-24544 REV 1d

145579-V-CA-004

Attachment 4

Calculation 145579-V-CA-002
Full DBVS Ductwork Pressures
Attachment 2, Sheet 1 &2

	A	B	D	E	F	G	H	I	J	K	L	M	N	O	P	Q	R	S	T	U	V	W
1			T	mda					A_t	d	Vd	VP_d	L	H_f	h_l						SP_{gov}	SP_{cum}
2	Full Flow - Pressure Calcs By: DW	Stream #	Dry-Bulb Temp	Mass Flow	Correction Factor	Mass Based	Density Factor	Mass Based	Reqd Duct Diam	Duct Diam	Duct Velocity	Velocity Pressure	Duct Length	Friction Factor	Friction Coeff.	Special Fitting	Sum Coef	Duct Loss	Equip Loss	Section Loss	Gov. Static Pressure	Cummulative Static
3	Feb 28, 2005		deg F	lb/hr		scfm		acfm	inches	inches	fpm	in WG	ft	ft/ft		Coef		in WG	in WG	in WG	in WG	in WG
4	INLET STACK		77 F	506	1.010	114	0.99	115	2.30	24	37	0.000	111.0	0.01	1.45		1.45	0.00		0.00		0.00
5	pre-stack		77 F	506	1.010	114	0.99	115	2.30	6	567	0.021	23.7	0.05	1.12	0.86	1.98	0.04	1.80	-1.84	0.00	-1.84
6	ICV AIR	9	77 F	506	1.010	114	0.98	116	2.30	4	1,326	0.107	41.8	0.07	2.88	0.84	3.72	0.40		-0.40	-1.84	-2.24
7	BOX		77 F	506	1.004	113	0.98	115	2.30	4	1,320	0.106		0.07							-2.24	-2.24
8	ICV OFF GAS	13	675 F	742	0.975	161	0.39	408	4.32	8	2,077	0.106	16.4	0.04	0.73	1.37	2.10	0.22		-0.22	-2.24	-2.46
15	ICV OFF GAS	15	573 F	1,248	0.985	274	0.51	537	4.98	8	1,537	0.076	16	0.03	0.47	1.01	1.48	0.11		-0.11	-2.46	-2.57
16	SMF		573 F	1,248	0.985	274	0.51	537	4.98	6	1,538	0.076		0.03					9.60	-9.60	-2.57	-12.17
17	FILTERED OFF GAS	17	573 F	1,241	0.992	274	0.50	551	5.02	8	1,577	0.077	79.8	0.03	2.33	3.33	5.66	0.44		-0.44	-12.17	-12.61
19	QUENCH FEED	19	134 F	12,439	0.985	2,728	0.88	3,153	12.02	12	4,014	0.868		0.02		1.08	1.08	0.92		-0.92	-12.61	-13.53
20	Quencher		134 F	12,439	0.985	2,728	0.86	3,160	12.04	12	4,024	0.858		0.02					2.00	-2.00	-13.53	-15.53
21	QUENCHER DISCHARGE	20	75 F	12,629	1.006	2,628	0.95	2,968	11.86	12	3,779	0.845		0.02							-15.53	-15.53
22	Scrubber		75 F	12,629	1.006	2,628	0.96	2,968	11.86	12	3,779	0.845		0.02					58.00	-58.00	-15.53	-71.53
23	SCRUB DISCHARGE	23	80 F	12,626	1.023	2,673	0.81	3,552	12.76	12	4,523	1.029		0.02							-71.53	-71.53
24	Mist Eliminator		80 F	12,626	1.023	2,673	0.81	3,552	12.76	12	4,523	1.029		0.02					2.50	-2.50	-71.53	-74.03
25	COND. FEED	28	80 F	12,626	1.023	2,674	0.80	3,580	12.81	12	4,556	1.037		0.02							-74.03	-74.03
26	Scrubber Condenser		80 F	12,626	1.023	2,674	0.80	3,580	12.81	12	4,556	1.037		0.02					6.00	-6.00	-74.03	-80.03
27	Mist Eliminator		80 F	12,626	1.004	2,622	0.79	3,580	12.81	12	4,556	1.018		0.02					2.50	-2.50	-80.03	-82.53
28	COND. DISCHARGE	29	80 F	12,626	1.023	2,674	0.78	3,674	12.96	12	4,678	1.064		0.02							-82.53	-82.53
30	HEATER FEED	30	121 F	13,924	1.023	3,169	0.73	4,356	14.13	16	3,121	0.440		0.01							-82.53	-82.53
31	HEPA Heater		121 F	13,924	1.023	3,169	0.73	4,356	14.13	16	3,121	0.440		0.01					2.00	-2.00	-82.53	-84.53
32	HEPA FEED	31	167 F	13,924	1.027	3,182	0.67	4,753	14.76	16	3,404	0.482		0.01		1.08	1.08	0.51		-0.51	-84.53	-85.04
33	HEPA 1		167 F	13,924	1.027	3,182	0.67	4,760	14.77	16	3,408	0.483		0.01					2.50	-2.50	-85.04	-87.54
34	HEPA 2		167 F	13,924	1.027	3,182	0.66	4,786	14.83	16	3,436	0.487		0.01					2.50	-2.50	-87.54	-90.04
35	C-FILTER INLET	32	167 F	13,924	1.030	3,190	0.66	4,847	14.91	16	3,472	0.493	5.0	0.01	0.06	1.48	1.54	0.76		-0.76	-90.04	-90.80
36	Hepa Filter		167 F	13,924	1.030	3,190	0.66	4,859	14.92	16	3,480	0.494		0.01					3.00	-3.00	-90.80	-93.80
37	Polishing Filter		167 F	13,924	1.030	3,190	0.65	4,906	15.00	16	3,513	0.499		0.01					0.85	-0.85	-93.80	-94.65
38	C-FILTER DISCHARGE	38	167 F	13,924	1.027	3,182	0.65	4,908	15.00	16	3,514	0.498	5	0.01	0.06	1.36	1.42	0.71		-0.71	-94.65	-95.36
40	SCR FEED	40	129 F	24,646	0.992	5,439	0.69	7,898	19.02	16	5,655	1.370	17.0	0.01	0.18	0.48	0.66	0.91		-0.91	-95.36	-96.26
41	SCR		129 F	24,646	0.992	5,439	0.69	7,919	19.05	16	5,672	1.374	47.4	0.01	0.50		0.50	0.69	20.00	-20.69	-96.26	-116.95
42	PART HEATED SCR FEED	41	691 F	24,646	0.952	5,219	0.33	15,913	27.01	16	11,397	2.648		0.01							-116.95	-116.95
43	HEATED SCR FEED	42	800 F	24,646	0.952	5,223	0.30	17,436	28.27	16	12,488	2.904		0.01							-116.95	-116.95
45	SCR DISCHARGE	45	248 F	24,680	1.028	5,836	0.53	10,569	22.01	22	4,004	0.531	21.9	0.01	0.17	1.07	1.24	0.66		-0.66	-116.95	-117.61
46	FAN		248 F	24,680	1.028	5,636	0.53	10,593	22.04	22	4,013	0.533		0.01						118.27	-117.61	0.66
47	FAN DISCHARGE	46	372 F	24,680	1.009	5,542	0.84	8,702	19.97	24	2,770	0.304		0.01		1.24	1.24	0.38		-0.38	0.66	0.28
48	STACK	46	372 F	24,680	1.009	5,542	0.84	8,702	19.97	24	2,770	0.304	130	0.01	0.94		0.94	0.28		-0.28	0.28	0

49
50 Attachment: 2
51 Calc. No: 145579-V-CA-002
52 Rev. No: C
53 Sheet: 1 of 3
54
55
56

Originator: DW
Date: March 1, 2005
Checked By: [illegible]
Date: 01 MAR 05

Attachment: 4
Calc. No.: 145579-V-CA-004
Rev. No.: 1
Sheet 1 of 2

Originator: DW
Date: 7 March 05
Checked by: [illegible]
Date: 01 MAR 05

	A	B	D	E	F	G	H	I	J	K	L	M	N	O	P	Q	R	S	T	U	V	W	X	Y	Z
1			T	mda					A_t	d	Vd	VP_d	L	H_t	h_f				Full Flow		Actual			SP_{gov}	SP_{cum}
2	Tri-Mer Pressure Data	Stream #	Dry-Bulb Temp	Mass Flow	Correction Factor	Mass Based	Density Factor	Mass Based	Reqd Duct Diam	Duct Diam	Duct Velocity	Velocity Pressure	Duct Length	Friction Factor	Friction Coeff.	Special Fitting	Sum Coef	Duct Loss	Equip Loss	Velocity Press	Flow Factor	Equip Loss At Actual	Section Loss	Gov. Static Pressure	Cummulative Static
3	By: DW Feb 28, 2005		deg F	lb/hr		scfm		scfm	inches	inches	fpm	in WG	ft	ft/ft		Coef		in WG	in WG	in WG		in WG	in WG	in WG	in WG
4	INLET STACK		77 F	505	1.013	114	0.99	115	2.30	24	37	0.000	111.0	0.01	1.45		1.45	0.00		0.00	1.002		0.00		0.00
5	pre-stack		77 F	505	1.010	114	0.99	115	2.30	6	586	0.021	23.7	0.05	1.12	0.88	1.98	0.04	1.80	0.02	1.00	1.79	-1.83	0.00	-1.83
6	ICV AIR	8	77 F	505	1.013	114	0.98	116	2.30	4	1,327	0.108	41.8	0.07	2.88	0.84	3.72	0.40		0.11	1.001		-0.40	-1.83	-2.23
7	BOX		77 F	503	1.013	114	0.98	116	2.31	4	1,329	0.108		0.07						0.11	1.014			-2.23	-2.23
8	ICV OFF GAS	13	578 F	742	0.978	161	0.39	409	4.33	8	2,085	0.107	18.4	0.04	0.73	0.84	1.57	0.17		0.11	1.007		-0.17	-2.23	-2.40
15	ICV OFF GAS	15	573 F	1248	0.988	274	0.51	537	4.96	8	1,538	0.075	16	0.03	0.47	1.02	1.49	0.11		0.07	1.002		-0.11	-2.40	-2.51
16	BMF		573 F	1248	0.988	274	0.51	537	4.96	8	1,538	0.075		0.03					9.60	0.07	1.002	9.62	-9.62	-2.51	-12.13
17	FILTERED OFF GAS	17	573 F	1238	0.984	274	0.50	550	5.02	8	1,576	0.077	79.8	0.03	2.33	0.88	2.99	0.23		0.08	0.998		-0.23	-12.13	-12.36
19	QUENCH FEED	19	304 F	2885	1.014	651	0.67	968	6.68	12	1,233	0.094		0.02		3.33	3.33	0.21		0.07	0.073		-0.21	-12.36	-12.57
20	Quencher		304 F	2885	1.014	651	0.67	969	6.68	12	1,233	0.094		0.02					2.00	0.07	0.073	0.15	-0.15	-12.57	-12.72
21	QUENCHER DISCHARGE	20	94 F	2942	1.021	689	0.93	721	5.75	12	918	0.049		0.02						0.05	0.057			-12.72	-12.72
22	Scrubber		94 F	2942	1.021	669	0.93	721	5.75	12	918	0.049		0.02					56.00	0.05	--------->	7.00	-7.00	-12.72	-19.72
23	SCRUB DISCHARGE	23	85 F	2891	1.020	658	0.93	709	5.70	12	903	0.047		0.02						1.03	0.046			-19.72	-19.72
24	Mist Eliminator		85 F	2891	1.020	658	0.93	709	5.70	12	903	0.047		0.02					2.50	1.03	0.046	0.11	-0.11	-19.72	-19.83
25	CONO. FEED	28	85 F	2891	1.020	658	0.93	709	5.70	12	903	0.047		0.02						1.04	0.045			-19.83	-19.83
26	Scrubber Condenser		85 F	2891	1.020	658	0.93	709	5.70	12	903	0.047		0.02					6.00	1.04	0.045	0.27	-0.27	-19.83	-20.10
27	Mist Eliminator		85 F	2891	1.020	658	0.92	710	5.70	12	904	0.047		0.02					2.50	1.02	0.046	0.12	-0.12	-20.10	-20.22
28	COND. DISCHARGE	29	85 F	2891	1.021	657	0.92	711	5.71	12	905	0.047		0.02						1.06	0.044			-20.22	-20.22
30	HEATER FEED	30	123 F	4456	1.000	992	0.86	1,148	7.26	16	822	0.038		0.01						0.44	0.082			-20.22	-20.22
31	HEPA Heater		123 F	4456	1.000	992	0.86	1,148	7.26	16	822	0.038		0.01					2.00	0.44	0.082	0.16	-0.16	-20.22	-20.38
32	HEPA FEED	31	167 F	4456	1.020	1,011	0.80	1,259	7.60	16	902	0.041		0.01		1.28	1.28	0.05		0.48	0.084		-0.05	-20.38	-20.43
33	HEPA 1		167 F	4456	1.020	1,011	0.80	1,259	7.60	16	902	0.041		0.01					2.50	0.48	0.084	0.21	-0.21	-20.43	-20.64
34	HEPA 2		167 F	4456	1.020	1,011	0.80	1,260	7.60	16	902	0.041		0.01					2.50	0.48	0.083	0.21	-0.21	-20.64	-20.85
35	C-FILTER INLET	32	167 F	4456	1.019	1,011	0.80	1,260	7.60	16	903	0.041	5.0	0.01	0.07	1.08	1.15	0.05		0.49	0.082		-0.05	-20.85	-20.90
36	Haga Filter		167 F	4456	1.019	1,011	0.80	1,260	7.60	16	903	0.041		0.01					3.00	0.49	0.082	0.25	-0.25	-20.90	-21.15
37	Polishing Filter		167 F	4456	1.019	1,011	0.80	1,261	7.60	16	903	0.041		0.01					0.85	0.50	0.081	0.07	-0.07	-21.15	-21.22
38	C-FILTER DISCHARGE	38	167 F	4454	0.970	961	0.80	1,200	7.42	16	860	0.037	5	0.01	0.07	1.48	1.55	0.08		0.50	0.074		-0.08	-21.22	-21.27
39	TRI-MER		77 F	4500	0.870	971	0.94	1,039	6.90	10	1,904	0.211	55.2	0.02	1.20	3.48	4.68	0.98	11.30	0.21	1.000	11.30	-12.28	-21.27	-33.55
40	Diluted Off Gas	45	79 F	36500	1.310	10,637	0.90	11,791	23.25	22	4,468	1.119	21.9	0.01	0.16	1.07	1.23	1.38		0.53	2.108		-1.38	-33.55	-34.94
41	FAN		79 F	36500	1.310	10,637	0.90	11,634	23.29	22	4,483	1.123		0.01						0.53	2.109		35.82	-34.94	0.89
42	FAN DISCHARGE	46	79 F	36500	0.980	7,960	0.98	8,087	19.25	24	2,574	0.465		0.01		1.24	1.24	0.50		0.30	1.335		-0.50	0.89	0.38
43	STACK DISCHARGE		79 F	36500	0.980	7,960	0.98	8,095	19.28	24	2,577	0.466	130	0.01	0.95		0.95	0.38		0.30	1.336		-0.38	0.38	0

44
45 Attachment: 2
46 Calc. No: 145579-V-CA-002
47 Rev. No: C
48 Sheet: 2 of 3
49
50
51

Originator: DW
Date: March 1, 2005
Checked By: [illegible]
Date: 01 MAR 05

Attachment: 4
Calc. No.: 145579-V-CA-004
Rev. No.: 1
Sheet 2 of 2

Originator: DW
Date: 7 March 05
Checked by: [illegible]
Date: 07 MAR 05

145579-V-CA-004

Attachment 5

Chilled Water/Glycol Schematic

CHILLED WATER/GLYCOL SCHEMATIC

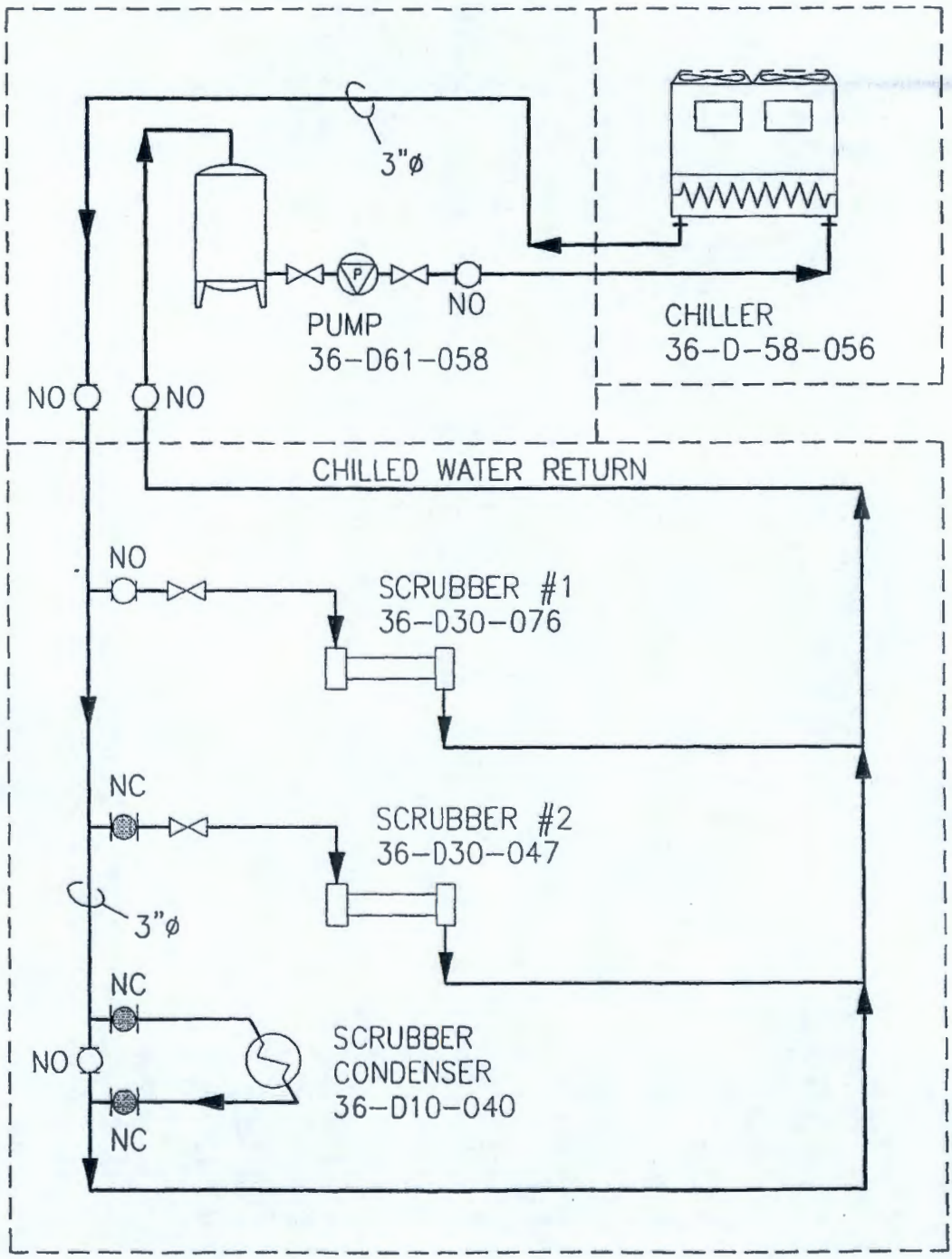

Attachment: #5
Calc. NO.: 145579-V-CA-004
Rev No. : 1
Sheet: 1 of 1

SKETCH IS BASED ON P&ID:
F-145579-36-A-100
F-145579-36-A-101
F-145579-36-A-102
F-145579-36-A-106

Originator: Dan Wallin.	Checked By: A. Aurelt
Date: 7 March 2005	Date: 07MAR05

145579-V-CA-004

Attachment 6

2001 ASHRAE Fundamentals Handbook
Pg 29.18-19

HEAT GAIN THROUGH INTERIOR SURFACES

Attachment:	6
Calc. No.:	145579-V-CA-004
Rev. No.:	1
Sheet	1 of 2
Originator:	DW
Date:	March 7, 05
Checked by:	[illegible]
Date:	07 MAR 05

) a space with a dif- separating physical ate is given by

(20)

adjacent and

°C

25. Temperature t_b a kitchen or boiler above the outdoor g spaces should be wn except that the ; contains no heat at gain, $t_b - t_i$ may tdoor air and con- inus 3 K. In some cases, the air temperature in the adjacent space will correspond to the outdoor air temperature or higher.

Floors

For floors directly in contact with the ground or over an underground basement that is neither ventilated nor conditioned, heat transfer may be neglected for cooling load estimates.

INFILTRATION AND VENTILATION HEAT GAIN

Ventilation

Outdoor air must be introduced to ventilate conditioned spaces. Chapter 26 suggests minimum outdoor air requirements for representative applications, but the minimum levels are not necessarily adequate for all psychological attitudes and physiological responses. Where maximum economy in space and load is essential, as in submarines or other restricted spaces, as little as 0.5 L/s of outdoor air per person can be sufficient, provided that recirculated air is adequately decontaminated (Consolazio and Pecora 1947).

Local codes and ordinances frequently specify ventilation requirements for public places and for industrial installations. For example, minimum requirements for safe practice in hospital operating rooms are given in NFPA *Standard* 99. Although 100% outdoor air is sometimes used in operating rooms, this standard does not require it, and limiting the outdoor air to 6 to 8 changes per hour is finding increasing acceptance.

ASHRAE *Standard* 62 recommends minimum ventilation rates for most common applications. For general applications, such as offices, 10 L/s per person is suggested.

Ventilation air is normally introduced at the air-conditioning apparatus rather than directly into the conditioned space and thus becomes a cooling coil load component instead of a space load component. Calculations for estimating this heat gain are discussed later in the section on Heat Gain Calculations Using Standard Air Values.

Reducing heat gain from outdoor air by using filtered recirculated air in combination with outdoor air should be considered. Recirculated air can also be treated to control odor (see Chapter 13 of this volume and Chapter 44 of the 1999 *ASHRAE Handbook—Applications*).

Infiltration

The principles of estimating infiltration in buildings, with emphasis on the heating season, are discussed in Chapter 26. For the cooling season, infiltration calculations are usually limited to doors and windows. Air leakage through doors can be estimated using the information in Chapter 26. Table 3 in Chapter 26, adjusted for the average wind velocity in the locality, may be used to compute infiltration for windows. In calculating window infiltration for an entire structure, the total window area on all sides of the building is not involved since wind does not act on all sides simultaneously. In any case, infiltration from all windows in any two adjacent wall exposures should be included. A knowledge of the prevailing wind direction and velocity is helpful in selecting exposures.

When economically feasible, sufficient outdoor air should be introduced as ventilation air through the air-conditioning equipment to maintain a constant outward escape of air and thus eliminate the infiltration portion of the gain. The pressure maintained must overcome wind pressure through cracks and door openings. When the quantity of outside air introduced through the cooling equipment is not sufficient to maintain the required pressure to eliminate infiltration, the entire infiltration load should be included in the space heat gain calculations.

Standard Air Volumes

Because the specific volume of air varies appreciably, calculations are more accurate when made on the basis of air mass instead of volume. However, volume values are often required for selection of coils, fans, ducts, etc., in which cases volume values based on measurement at standard conditions may be used for accurate results. One standard value is 1.2 kg (dry air)/m^3 (0.833 m^3/kg). This density corresponds to about 16°C at saturation and 21°C dry air (at 101.325 kPa). Because air usually passes through the coils, fans, ducts, etc., at a density close to standard, the accuracy desired normally requires no correction. When airflow is to be measured at a particular condition or point, such as at a coil entrance or exit, the corresponding specific volume can be read from the psychrometric chart.

Example 3. Standard air calculation. Assume outdoor air at standard conditions is flowing at 10 m^3/s. What is the flow rate when the outdoor air is at 35°C dry-bulb and 24°C wet-bulb (0.893 m^3/kg)?

Solution: The measured rate at that condition should be 10 (0.893/0.833) = 10.7 m^3/s.

Heat Gain Calculations Using Standard Air Values

Air-conditioning design often requires calculation of the following.

1. Total heat

Total heat gain q_t corresponding to the change of a given standard flow rate Q_s through an enthalpy difference Δh is

$$q_t = 1.2 Q_s \Delta h \tag{21}$$

where air density = 1.2 kg/m^3.

2. Sensible heat

Sensible heat gain q_s corresponding to the change of dry-bulb temperature Δt for given airflow (standard conditions) Q_s is

$$q_s = 1.2(1.006 + 1.84W) Q_s \Delta t \tag{22}$$

where

1.006 = specific heat of dry air, kJ/(kg·K)
W = humidity ratio, kg (water)/kg (air)
1.84 = specific heat of water vapor, kJ/(kg·K)

The specific heats are for a range from about −75 to 90°C. When $W = 0$, the value of $1.20(1.006 + 1.84W) = 1.21$; when $W = 0.01$, the value is 1.23; when $W = 0.02$, the value is 1.25; and when $W = 0.03$,

the value is 1.27. Because a value of W = 0.01 approximates conditions found in many air-conditioning problems, the sensible heat change (in W) can normally be found as

$$q_s = 1.23 Q_s \Delta t \tag{23}$$

3. Latent heat

Latent heat gain q_l corresponding to the change of humidity ratio ΔW for given airflow (standard conditions) Q_s is

$$q_l = 1.20 \times 2500 Q_s \Delta W = 3010 Q_s \Delta W \tag{24}$$

where 2500 is the approximate heat content of 50% rh vapor at 24°C less the heat content of water at 10°C. 50% rh at 24°C is a common design condition for the space, and 10°C is normal condensate temperature from cooling and dehumidifying coils.

The constants 1.20, 1.23, and 3010 are useful in air-conditioning calculations at sea level (101.325 kPa) and for normal temperatures and moisture ratios. For other conditions, more precise values should be used. For an altitude of 1500 m (84.556 kPa), appropriate values are 1.00, 1.03, and 2500.

LATENT HEAT GAIN FROM MOISTURE THROUGH PERMEABLE BUILDING MATERIALS

The diffusion of moisture through all common building materials is a natural phenomenon that is always present. Chapters 23 and 24 cover the principles and specific methods used to control moisture. Moisture transfer through walls is often neglected in the usual comfort air-conditioning application because the actual rate is quite small and the corresponding latent heat gain is insignificant. The permeability and permeance values for various building materials are given in Table 9, Chapter 25. Vapor retarders are frequently installed to keep moisture transfer to a minimum.

Certain industrial applications call for a low moisture content to be maintained in a conditioned space. In such cases, the latent heat gain accompanying moisture transfer through walls may be greater than any other latent heat gain. This gain is computed by

$$q_m = MA\Delta p_v (h_g - h_f) \tag{25}$$

where

q_m = latent heat gain, W
M = permeance of wall assembly, ng/(s·m²·Pa)
A = area of wall surface, m²
Δp_v = vapor pressure difference, Pa
h_g = enthalpy at room conditions, kJ/kg
h_f = enthalpy of water condensed at cooling coil, kJ/kg
= 2500 kJ/kg when room temperature is 24°C and condensate off coil is 10°C

HEAT GAIN FROM MISCELLANEOUS SOURCES

The calculation of the cooling load is affected by such factors as (1) type of HVAC system, (2) effectiveness of heat exchange surfaces, (3) fan location, (4) duct heat gain or loss, (5) duct leakage, (6) heat-extraction lighting systems, (7) type of return air system, and (8) sequence of controls. System performance needs to be analyzed as a sequence of individual psychrometric processes. The most straightforward method first defines all known (or desired) state points on a psychrometric chart. Next, the actual entering and leaving dry- and wet-bulb conditions are calculated for such components as the cooling and/or heating coils (based on zone or space load), the amount of outside air introduced into the system through the equipment, and the amount of heat gain or loss at various points.

This overall process must verify that the space conditions originally sought can actually be met by the designed system by considering all sensible and latent heat changes to the air as it travels from the space conditions through the return air system and equipment back to the conditioned space. If the design is successful (i.e., within the degree of correctness of the various design assumptions), appropriate equipment components can safely be selected. If not, the designer must judge if the results will be "close enough" to satisfy the needs of the project, or if one or more assumptions and/or design criteria must first be modified and the calculations rerun.

Heat Gain from Fans

Fans that circulate air through HVAC systems add energy to the system by one or all of the following processes:

- Temperature rise in the airstream from fan inefficiency. Depending on the equipment, fan efficiencies generally range between 50 and 70%, with an average value of 65%. Thus, some 35% of the energy required by the fan appears as instantaneous heat gain to the air being transported.
- Temperature rise in the airstream as a consequence of air static and velocity pressure. The "useful" 65% of the total fan energy that creates pressure to move air spreads out throughout the entire air transport system in the process of conversion to sensible heat. Designers commonly assume that the temperature change equivalent of this heat occurs at a single point in the system, depending on fan location as noted below.
- Temperature rise from heat generated by motor and drive inefficiencies. The relatively small gains from fan motors and drives are normally disregarded unless the motor and/or drive are physically located within the conditioned airstream. Equations (7), (8), and (9) may be used to estimate heat gains from typical motors. Belt drive losses are often estimated as 3% of the motor power rating. Conversion to temperature rise is calculated by Equation (26).

The location of each fan relative to other elements (primarily the cooling coil) and the type of system (e.g., single zone, multizone, double-duct, terminal reheat, VAV), along with the concept of equipment control (space temperature alone, space temperature and relative humidity, etc.), must be known before the analysis can be completed. A fan located upstream of the cooling coil (blowthrough supply fan, return air fan, outside air fan) adds the heat equivalent of its inefficiency to the airstream at that point; thus, a slightly elevated entering dry-bulb temperature to the cooling coil results. A fan located downstream of the cooling coil raises the dry-bulb temperature of air leaving the cooling coil. This rise can be offset by reducing the cooling coil temperature or, alternatively, by increasing airflow across the cooling coil as long as its impact on space conditions is considered.

Attachment:	6
Calc. No.:	145579-V-CA-004
Rev. No.:	1
Sheet	2 of 2
Originator:	DW
Date:	March 7, 05
Checked by:	
Date:	07MAR05

bjected to rig-
pply duct sys-
ntage of space
o the dry-bulb
an equivalent

much greater
it is normally
pply ducts is a
y and must be
ly air temper-
. Inward leak-
lity variations,
nces due to the
Chapter 34 has

not leak more
equipment and

145579-V-CA-004

Attachment 7

1989 ASHRAE Fundamentals Handbook
Pg 33.2 & 4

Attachment:	7
Calc. No.:	145579-V-CA-004
Rev. No.:	1
Sheet	1 of 2
Originator:	DCD
Date:	March 7, 05
Checked by:	[illegible]
Date:	07 MAR 2005

re sometimes
and Bowman
to new pipe
ion, Durham,
15 to 20 % for
ems. Carrier
ween friction

a the corrosive
and concluded
ed steel, lead,
ter (1941) and
rs of cold and
to 65%. Aged
(1983) recom-
uncoated cast
r concrete.
osion is not a
sed in Europe
fter 30 years.

Extensive age-related flow data are available for use with the Hazen-Williams empirical equation. Difficulties arise in its application, however, because the original Hazen-Williams roughness coefficients are valid only for the specific pipe diameters, water velocities, and water viscosities used in the original experiments. Thus, when the *C*s are extended to different diameters, velocities, and/or water viscosities, errors of up to about 50% in pipe capacity can occur (Williams and Hazen 1933, Sanks 1978).

Water Hammer

When any moving fluid (not just water) is abruptly stopped as when a valve closes suddenly, large pressures can develop. While detailed analysis requires knowledge of the elastic properties of the pipe and the flow-time history, the limiting case of rigid pipe and instantaneous closure is simple to calculate. Under these conditions,

$$p_h = \varrho c_s V / g_c \tag{9}$$

where

p_h = pressure rise caused by water hammer, lb_f/ft^2
ϱ = fluid density, lb_m/ft^3
c_s = velocity of sound in the fluid, ft/s
V = fluid flow velocity, ft/s

c_s for water is 4720 ft/s, although the elasticity of the pipe reduces the effective value.

Example 3. What is the maximum pressure rise if water flowing at 10 ft/s is stopped instantaneously?

Solution: $p_h = 62.4 \times 4720 \times 10/32.2 = 91468\ lb/ft^2$
$= 635$ psi

Other Considerations

Not discussed in detail in this chapter, but of potentially great importance are a number of physical and chemical considerations: pipe and fitting design, materials, and joining methods must be appropriate for working pressures and temperatures encountered, as well as being suitably resistant to chemical attack by the fluid.

Other Piping Materials and Fluids

For fluids not included in this chapter or for piping materials of different dimensions, manufacturer's literature frequently supplies pressure drop charts. The Darcy-Weisbach equation and the Moody chart or the Colebrook equation can be used as an alternative to pressure drop charts or tables.

HOT AND CHILLED WATER PIPE SIZING

The Darcy-Weisbach equation with friction factors from the Moody chart or Colebrook equation (or, alternatively, the Hazen-Williams equation) is fundamental to calculating pressure drop in hot and chilled water piping; however, charts calculated from these equations (such as Figures 1, 2, and 3) provide easy determination of pressure drops for specific fluids and pipe standards. In addition, tables of pressure drops can be found in Hydraulic Institute (1979) and Crane Co. (1976).

Most tables and charts for water are calculated for properties at 60°F. Using these for hot water introduces some error, although the answers are conservative; *i.e.*, cold water calculations overstate the pressure drop for hot water. Using 60°F water charts for 200°F water should not result in errors in Δp exceeding 20%.

Range of Usage of Pressure Drop Charts

General Design Range. The general range of pipe friction loss used for design of hydronic systems is between 1 and 4 ft/100 ft. A value of 2.5 ft/100 ft represents the *mean* to which most systems are designed. Wider ranges may be used in specific designs, if certain precautions are taken.

Piping Noise. Closed loop hydronic system piping is generally sized below certain arbitrary upper limits, such as a velocity limit of 4 fps for 2-in. pipe and under, and a pressure drop limit of 4 ft

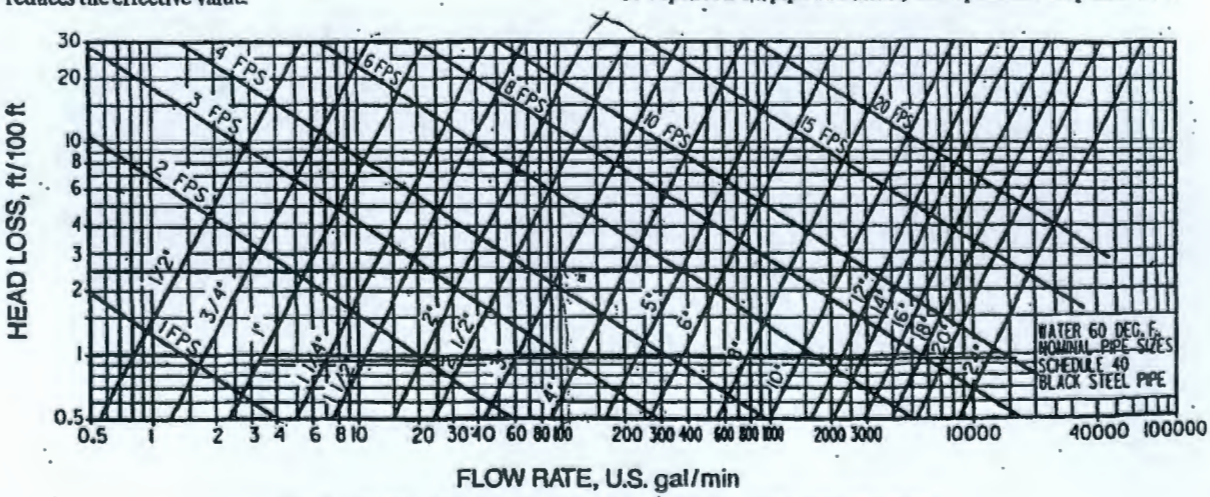

Fig. 1 Friction Loss for Water in Commercial Stee Pipe (Schedule 40)

Table 1 *K* Factors—Threaded Pipe Fittings

Nominal Pipe Dia., mm	90° Standard Elbow	90° Long-Radius Elbow	45° Elbow	Return Bend	Tee-Line	Tee-Branch	Globe Valve	Gate Valve	Angle Valve	Swing Check Valve	Bell Mouth Inlet	Square Inlet	Projected Inlet
10	2.5	—	0.38	2.5	0.90	2.7	20	0.40	—	8.0	0.05	0.5	1.0
15	2.1	—	0.37	2.1	0.90	2.4	14	0.33	—	5.5	0.05	0.5	1.0
20	1.7	0.92	0.35	1.7	0.90	2.1	10	0.28	6.1	3.7	0.05	0.5	1.0
25	1.5	0.78	0.34	1.5	0.90	1.8	9	0.24	4.6	3.0	0.05	0.5	1.0
32	1.3	0.65	0.33	1.3	0.90	1.7	8.5	0.22	3.6	2.7	0.05	0.5	1.0
40	1.2	0.54	0.32	1.2	0.90	1.6	8	0.19	2.9	2.5	0.05	0.5	1.0
50	1.0	0.42	0.31	1.0	0.90	1.4	7	0.17	2.1	2.3	0.05	0.5	1.0
65	0.85	0.35	0.30	0.85	0.90	1.3	6.5	0.16	1.6	2.2	0.05	0.5	1.0
80	0.80	0.31	0.29	0.80	0.90	1.2	6	0.14	1.3	2.1	0.05	0.5	1.0
100	0.70	0.24	0.28	0.70	0.90	1.1	5.7	0.12	1.0	2.0	0.05	0.5	1.0

Source: Engineering Data Book (Hydraulic Institute 1979).

Table 2 *K* Factors—Flanged Welded Pipe Fittings

Nominal Pipe Dia., mm	90° Standard Elbow	90° Long-Radius Elbow	45° Long-Radius Elbow	Return Bend Standard	Return Bend Long-Radius	Tee-Line	Tee-Branch	Globe Valve	Gate Valve	Angle Valve	Swing Check Valve
25	0.43	0.41	0.22	0.43	0.43	0.26	1.0	13	—	4.8	2.0
32	0.41	0.37	0.22	0.41	0.38	0.25	0.95	12	—	3.7	2.0
40	0.40	0.35	0.21	0.40	0.35	0.23	0.90	10	—	3.0	2.0
50	0.38	0.30	0.20	0.38	0.30	0.20	0.84	9	0.34	2.5	2.0
65	0.35	0.28	0.19	0.35	0.27	0.18	0.79	8	0.27	2.3	2.0
80	0.34	0.25	0.18	0.34	0.25	0.17	0.76	7	0.22	2.2	2.0
100	0.31	0.22	0.18	0.31	0.22	0.15	0.70	6.5	0.16	2.1	2.0
150	0.29	0.18	0.17	0.29	0.18	0.12	0.62	6	0.10	2.1	2.0
200	0.27	0.16	0.17	0.27	0.15	0.10	0.58	5.7	0.08	2.1	2.0
250	0.25	0.14	0.16	0.25	0.14	0.09	0.53	5.7	0.06	2.1	2.0
300	0.24	0.13	0.16	0.24	0.13	0.08	0.50	5.7	0.05	2.1	2.0

Source: Engineering Data Book (Hydraulic Institute 1979).

Table 3 Approximate Range of Variation for *K* Factors

90° Elbow	Regular threaded	±20% above 50 mm	Tee	Threaded, line or branch	±25%
		±40% below 50 mm		Flanged, line or branch	±35%
	Long-radius threaded	±25%	Globe valve	Threaded	±25%
	Regular flanged	±35%		Flanged	±25%
	Long-radius flanged	±30%	Gate valve	Threaded	±25%
45° Elbow	Regular threaded	±10%		Flanged	±50%
	Long-radius flanged	±10%	Angle valve	Threaded	±20%
Return bend (180°)	Regular threaded	±25%		Flanged	±50%
	Regular flanged	±35%	Check valve	Threaded	±50%
	Long-radius flanged	±30%		Flanged	+200% −80%

Source: Engineering Data Book (Hydraulic Institute 1979).

Table 4 Comparison of *K* Factors from Rahmeyer (1999a) with Previous Reference Data for Elbows

		Rahmeyer Values		
	Previous Ref.[a] Values	0.6 m/s	1.2 m/s	2.4 m/s
50 mm standard elbow (threaded)	0.60 to 1.0 (1.0)	0.54	0.6	0.68
100 mm long-radius elbow (welded)	0.22 to 0.24 (0.22)	0.28	0.26	0.24
100 mm standard elbow (welded)	0.31 to 0.34	0.40	0.37	0.34
50 mm reducing elbow (50 × 40) (threaded)	–	0.76	0.81	0.87
50 mm expanding elbow (40 × 50) (threaded)	–	0.65	0.59	0.54
100 mm reducing elbow (100 × 80) (welded)	–	0.72	0.57	0.45
100 mm expanding elbow (80 × 100) (welded)	–	0.28	0.28	0.27
50 mm reducer (50 × 40) (threaded)	–	0.99	0.53	0.28
50 mm expansion (40 × 50) (threaded)	–	0.20	0.16	0.13
100 mm reducer (100 × 80) (welded)	0.22	0.40	0.23	0.14
100 mm expansion (80 × 100) (welded)	–	0.13	0.11	0.11

[a] Previous references are Freeman (1941), Crane Co. (1976), and Hydraulic Institute (1979). Numbers in ( ) are from Table 1 and Table 2, above.

Attachment:	7	Originator:	DW
Calc. No.:	145579-V-CA-004	Date:	7 March 05
Rev. No.:	1	Checked by:	[illegible]
Sheet	2 of 2	Date:	07 MAR 05

145579-V-CA-004

Attachment 8

Data sheet 145579-V-DS-12.1,
Appendix A, Pg 11-15 of 116,

York International
Air-Cooled Scroll Chillers
Style C YCAL0014 – YCAL0134
Selection Data
Form 150.62-EG1

Selection Data

GUIDE TO SELECTION

Capacity ratings for YORK YCAL Packaged Air-Cooled Liquid Chillers, shown on pages 16 through 39 cover the majority of design applications for these units. For unusual applications or uses beyond the scope of this catalog, please consult your nearest YORK Office or representative.

SELECTION RULES

1. **Ratings** – Ratings may be interpolated, but must not be extrapolated. The Ratings given on pages 16 through 39 and the DESIGN PARAMETERS given on page 11 indicate the limits of application for these chillers.
2. **Cooler Water** – Ratings are based upon 2.4 GPM per ton which is equal to a 10°F chilled water range and a 0.0001 fouling factor for the cooler at sea level. Tables on pages 16 through 39 give capacity, compressor kW required, cooler GPM and unit EER.
3. **Condenser** – Ratings are given in terms of air on condenser in degrees Fahrenheit.
4. **Copper Fin Condenser Ratings** – Since the thermal conductivity of copper is slightly higher than aluminum, apply the following corrections to the standard ratings. Tons x 0.97 and compressor kW x 0.99.
5. **Performance Data Correction Factors** – Ratings are based on 0.0001 cooler fouling factor, 10°F chilled water range and at sea level. For operation at different conditions, apply the appropriate correction factor from the following table.

FOULING FACTOR					
		0.0001		0.00025	
ALTITUDE	TEMP SPLIT	TONS	COMPR kW	TONS	COMPR kW
SEA LEVEL	8	0.994	0.999	0.991	0.998
	10	1.000	1.000	0.993	0.999
	12	1.005	1.001	0.999	0.999
	14	1.008	1.002	1.005	1.000
2000 FT.	8	0.990	1.010	0.984	1.009
	10	0.995	1.010	0.990	1.009
	12	0.999	1.011	0.995	1.010
	14	1.004	1.015	0.998	1.011
4000 FT.	8	0.983	1.021	0.977	1.020
	10	0.989	1.024	0.983	1.021
	12	0.994	1.025	0.988	1.024
	14	0.997	1.026	0.993	1.025
6000 FT.	8	0.978	1.035	0.973	1.034
	10	0.982	1.037	0.978	1.035
	12	0.987	1.037	0.980	1.036
	14	0.992	1.038	0.986	1.037

6. **Ethylene Glycol Correction Factors** – The following factors are to be applied to the standard ratings for units cooling ethylene glycol.

ETHYLENE GLYCOL					
% WEIGHT	TONS kW	COMPR	GPM°F/TON	PRESS DROP	FREEZE PT
10	0.985	0.997	24.1	1.034	26
20	0.981	0.996	24.9	1.062	16
30	0.974	0.995	26.1	1.096	5
40	0.966	0.991	27.5	1.134	-10
50	0.957	0.989	29.1	1.172	-32

7. **Propylene Glycol Correction Factors** – The following factors are to be applied to the standard ratings for units cooling propylene glycol.

PROPYLENE GLYCOL					
% WEIGHT	TONS kW	COMPR	GPM°F/TON	PRESS DROP	FREEZE PT
10	0.983	0.996	24.2	1.048	27
20	0.974	0.995	24.4	1.086	19
30	0.961	0.990	25.1	1.134	8
40	0.946	0.98	26.0	1.186	-5
50	0.928	0.984	27.2	1.247	-25

METHOD OF SELECTION

To select of YORK Packaged Air-Cooled Liquid Chiller,
the following data must be known:

1. Design Capacity in tons refrigeration (TR).
2. Entering and Leaving Liquid Temperatures.
3. Outside ambient air temperature in degrees F.
4. GPM of chilled liquid.

Determine capacity requirements from the following formula:

$$GPM = \frac{TR \times 24}{RANGE\ (°F)}$$

EXAMPLE – WATER CHILLING

1. **GIVEN:** Provide a capacity of 50 Tons at 42°F leaving water 10°F range, 0.0001FF, 80°F air on the condenser, at sea level and 60 Hz.
2. **FIND:** Unit Size
   Compressor kW Input

Originator: Date: 7 March 05
Checked by: Date: 07 MAR 05
Attachment: 8
Calc. No.: 145579-V-CA-004
Rev. No.: 1
Sheet 1 of 4

3. From the Ratings on pages 16 - 46:

   SELECT: YCAL0050 (English Units)
   53.1 Tons
   48.7 Compressor kW
   11.7 Unit EER

4. Calculate Compressor kW at 50 Tons:

$$kW = \frac{50}{53.1} \times 48.7kW = 45.9kW$$

5. Calculate GPM:

$$GPM = \frac{50 \text{ Tons} \times 24}{10°F \text{ Range}} = 120 \text{ GPM}$$

6. From Page 14, read 10 ft of water cooler pressure drop for GPM:
7. A YCAL0050 is suitable.

EXAMPLE – Brine Chilling

1. **GIVEN:** Provide a capacity of 34 tons cooling 30% by weight Ethylene Glycol from 50°F to 40°F, 0.00025FF, 95°F air on the condenser, 60 Hz and 4000 ft. altitude.
2. **DETERMINE:**
   Unit Size
   kW Input
   Ethylene Glycol GPM
   Cooler Pressure Drop
3. See Ethylene Glycol correction factors, for 30% by weight Ethylene Glycol.

   READ: .974 Tons factor
   .995 Compr. kW factor
   26.1 Gal./°F/Tons factor

4. See Performance Data Correction Factors for 0.00025 fouling factor and 4000 ft. altitude.

   READ: .983 Tons factor
   1.021 kW factor

5. From RATINGS on pages 16 - 46:

   SELECT: YCAL0040 (English Units)
   36.1 Tons
   38.6 Compressor kW

6. Determine YCAL0040 brine cooling capacity and Compressor kW requirement:
   A. Tons = 36.1 x .974 x .983 = 34.6
   B. Compr. kW = 38.6 x .995 x 1.021 = 39.2
7. Determine average full load Compressor kW at 34 tons:

$$\frac{34 \text{ tons}}{34.6 \text{ tons}} \times (39.2 \text{ kW}) = 38.5 \text{ Compressor kW}$$

8. Determine Ethylene Glycol GPM:

$$GPM = \frac{\text{Tons} \times \text{Gal. °F/min/Ton factor}}{\text{Range}}$$

$$GPM = \frac{34.0 \times 26.1}{10}$$

$$GPM = 88.7$$

9. Determine Cooler Pressure Drop:
   A. See Ethylene Glycol correction factors for 30% by weight Ethylene Glycol.

   READ: 1.096 Pressure Drop Factor

   B. See page 14 at 88.7 GPM for the YCAL0040.

   READ: 6.5 Ft. H_2O Pressure Drop

   C. Cooler Pressure Drop = 6.5 x 1.096 or 7.1 Ft. H_2O

10. YCAL0040 is suitable.

		Originator:	DW
Attachment:	8	Date:	7 March 05
Calc. No.:	145579-V-CA-004	Checked by:	[illegible]
Rev. No.:	1	Date:	07MAR05
Sheet	2 of 4		

FORM 150.62-EG1

Design Parameters

ENGLISH UNITS

YCAL	LEAVING WATER					
	TEMPERATURE (°F)		COOLER FLOW (GPM[3])		AIR ON CONDENSER (°F)	
	MIN[1]	MAX[2]	MIN	MAX	MIN[4]	MAX[5]
0014	40	55	25	60	0	125
0020	40	55	25	60	0	125
0024	40	55	30	70	0	125
0030	40	55	35	170	0	125
0034	40	55	35	170	0	125
0040	40	55	60	325	0	125
0042	40	55	60	325	0	125
0044	40	55	60	325	0	125
0050	40	55	60	325	0	125
0060	40	55	60	325	0	125
0064	40	55	100	350	0	125
0070	40	55	100	350	0	125
0074	40	55	100	350	0	125
0080	40	55	100	400	0	125
0090	40	55	138	525	0	125
0094	40	55	138	525	0	125
0104	40	55	156	625	0	125
0114	40	55	156	625	0	125
0134	40	55	156	625	0	125

SI UNITS

YCAL	LEAVING WATER					
	TEMPERATURE (°C)		COOLER FLOW (l/s[3])		AIR ON CONDENSER (°C)	
	MIN[1]	MAX[2]	MIN	MAX	MIN[4]	MAX[5]
0014	4.4	12.8	1.6	3.8	-17.7	51.7
0020	4.4	12.8	1.6	3.8	-17.7	51.7
0024	4.4	12.8	1.9	4.4	-17.7	51.7
0030	4.4	12.8	2.2	10.7	-17.7	51.7
0034	4.4	12.8	2.2	10.7	-17.7	51.7
0040	4.4	12.8	3.8	20.5	-17.7	51.7
0042	4.4	12.8	3.8	20.5	-17.7	51.7
0044	4.4	12.8	3.8	20.5	-17.7	51.7
0050	4.4	12.8	3.8	20.5	-17.7	51.7
0060	4.4	12.8	3.8	20.5	-17.7	51.7
0064	4.4	12.8	6.3	22.1	-17.7	51.7
0070	4.4	12.8	6.3	22.1	-17.7	51.7
0074	4.4	12.8	6.3	22.1	-17.7	51.7
0080	4.4	12.8	6.3	25.2	-17.7	51.7
0090	4.4	12.8	8.7	33.1	-17.7	51.7
0094	4.4	12.8	8.7	33.1	-17.7	51.7
0104	4.4	12.8	9.8	39.4	-17.7	51.7
0114	4.4	12.8	9.8	39.4	-17.7	51.7
0134	4.4	12.8	9.8	39.4	-17.7	51.7

NOTES:

1. For leaving brine temperature below 40°F (4.4°C), contact your nearest YORK Office for application requirements.
2. For leaving water temperature higher than 55°F (12.8°C), contact the nearest YORK Office for application guidelines.
3. The evaporator is protected against freezing to -20°F (-28.8°C) with an electric heater as standard.
4. For operation at temperatures below 25°F (-3.9°C), the optional Low Ambient Kit will need to be installed on the system (for YCAL0014-0080 models only).
5. For operation at temperatures above 115°F (46.1°C), the optional High Ambient Kit will need to be installed on the system.

Originator: Date: 7 March 05
Checked by: Date: 07 MAR 05

Attachment: 8
Calc. No.: 145579-V-CA-004
Rev. No.: 1
Sheet 3 of 4

Water Pressure Drop

ENGLISH

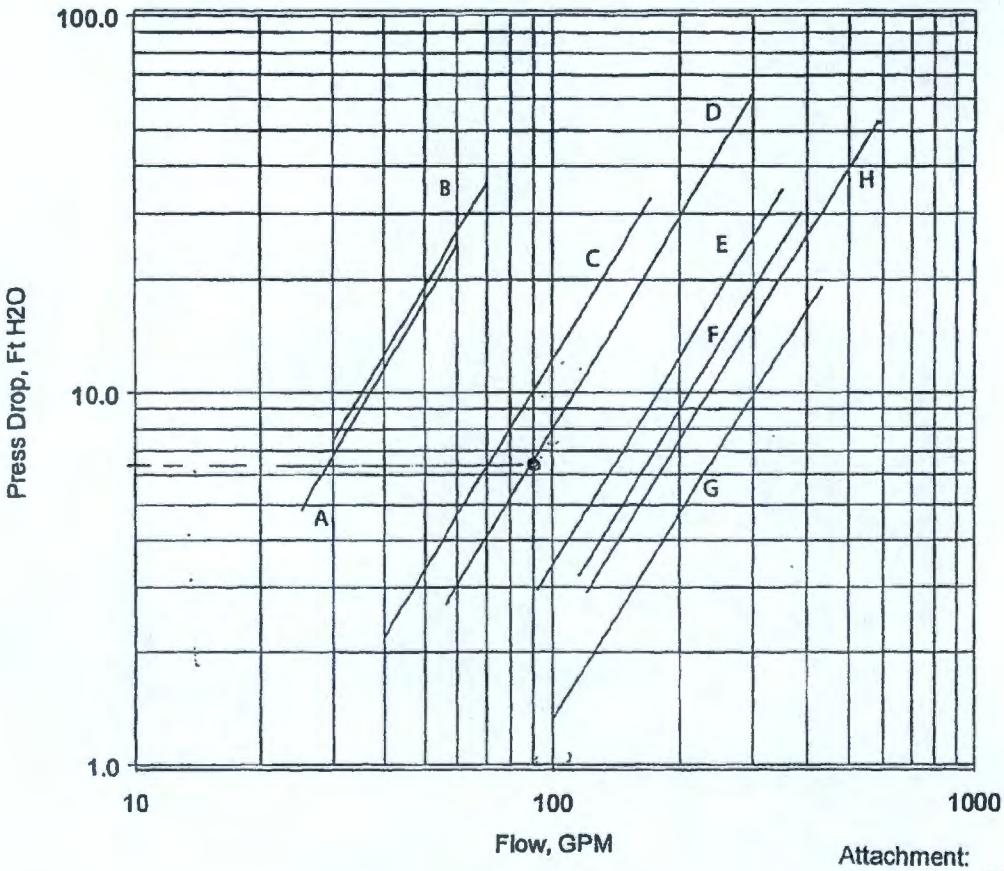

MODEL YCAL	COOLER CURVE
0014, 0020	A
0024	B
0030, 0034	C
0040, 0042 0044, 0050, 0060	D
0064, 0070, 0074	E
0080	F
0090, 0094	G
0104, 0114, 0134	H

Attachment:	8
Calc. No.:	145579-V-CA-004
Rev. No.:	1
Sheet	4 of 5
Originator:	DW
Date:	7 March 05
Checked by:	[illegible]
Date:	07MAR05

Note: Water Pressure Drop Curves may extend past the minimum and maximum water flow ranges. See page 13 for minimum and maximum flow points.

FORM 150.62-EG1

SI

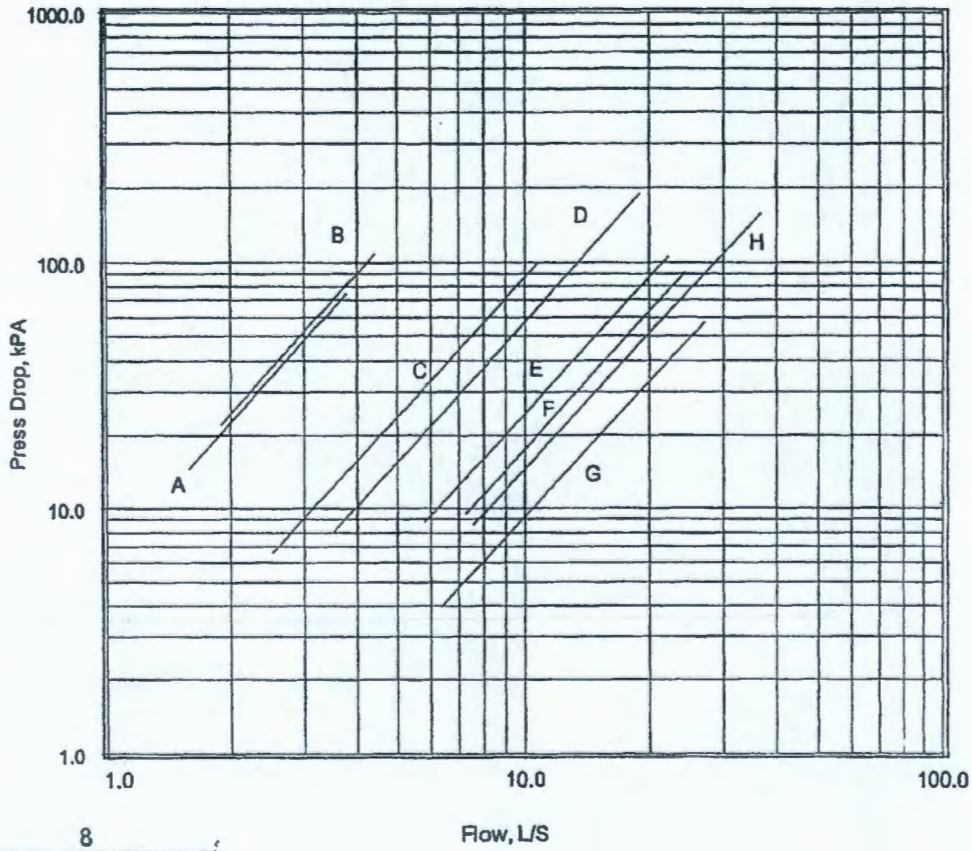

Attachment: 8
Calc. No.: 145579-V-CA-004
Rev. No.: 1
Sheet 5 of 5

Originator: DW
Date: 7 March 05
Checked by: [illegible]
Date: 07MAR05

MODEL YCAL	COOLER CURVE
0014, 0020	A
0024	B
0030, 0034	C
0040, 0042 0044, 0050, 0060	D
0064, 0070, 0074	E
0080	F
0090, 0094	G
0104, 0114, 0134	H

Note: Water Pressure Drop Curves may extend past the minimum and maximum water flow ranges. See page 13 for minimum and maximum flow points.

145579-V-CA-004

Attachment 9

American Industrial Heat Transfer Inc.

CT – STC Series
Fixed Tube Bundle / Liquid Cooled
Heat Exchangers

Catalog Pg 41-50

American Industrial Heat Transfer Inc.®

Manufacturer of Quality Heat Exchangers

CS - STC SERIES

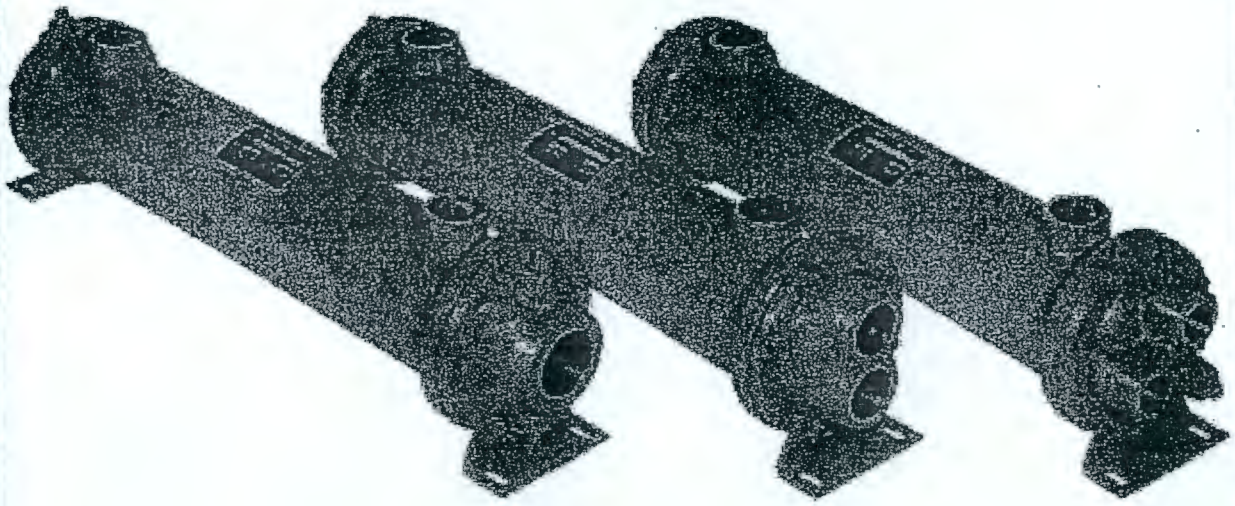

SINGLE PASS | TWO PASS | FOUR PASS

Fixed Tube Bundle / Liquid Cooled

HEAT EXCHANGERS

- Steel or stainless steel construction
- Operating pressure for tubes 150 PSI
- Operating pressure for shell 300 PSI
- Operating temperature 300° F
- Cools: Fluid power systems, rock crushers, presses, shears, lubrication equipment, paper machinery, gear drives, marine units, missions, etc.

Attachment:	9	Originator:	DW
Calc. No.:	145579-V-CA-004	Date:	7 March 05
Rev. No.:	1	Checked by:	
Sheet	1 of 10	Date:	07MAR05

CS & STC Series *overview*

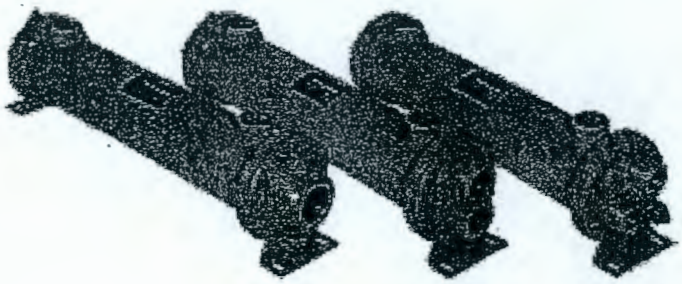

CS SERIES

Fixed tube construction heat exchangers with NPT connections. Made of steel with copper cooling tubes and cast iron end bonnets. Standard sizes from 3" through 8" diameters. Standard one, two, and four pass models are available. Options include 90/10 copper nickel and 316 stainless steel cooling tube, and zinc anodes. Can be customized to fit your requirements.

STC SERIES

Similar in design to CS series with fixed tube construction and NPT connections made of 316 stainless steel. Standard sizes from 3" through 8" diameters. Standard one, two, and four pass models are available. Larger diameter units available upon request. Can be customized to fit your requirements.

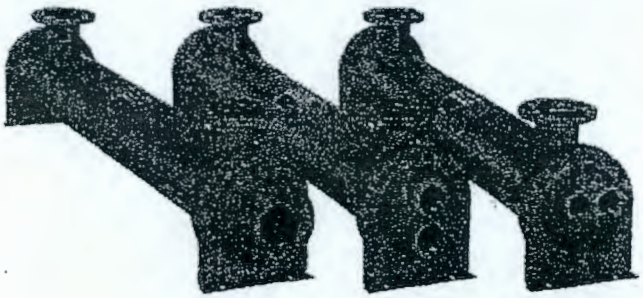

CS 2000 SERIES

Fixed tube construction heat exchangers with ANSI flange connections. Made of Steel with copper cooling tubes and cast iron end bonnets. Standard 10" diameter from 111 to 442 sq. ft. Standard one, two, and four pass models are available. Options include 90/10 copper nickel and 316 stainless steel cooling tubes, and zinc anodes. Can be customized to fit your requirements.

(See Page 51)

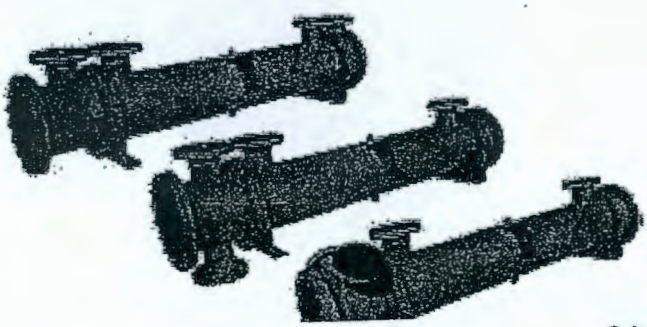

CS 2400 - CS 4800 SERIES

Strait tube large capacity heat exchangers with fixed tube bundle. Standard one, two and four pass units available. Sizes from 12" to 24" diameters. Made of steel with copper cooling tubes and steel channels. Options include 90/10 copper nickel and 316 stainless steel cooling tube, and zinc anodes. Can be customized to fit your requirements.

Attachment:	9	Originator:	DW
Calc. No.:	145579-V-CA-004	Date:	7 March 05
Rev. No.:	1	Checked by:	[illegible]
Sheet	2 of 10	Date:	07 MAR 05

note: AIHTI Copyright

CS & STC Series *overview*

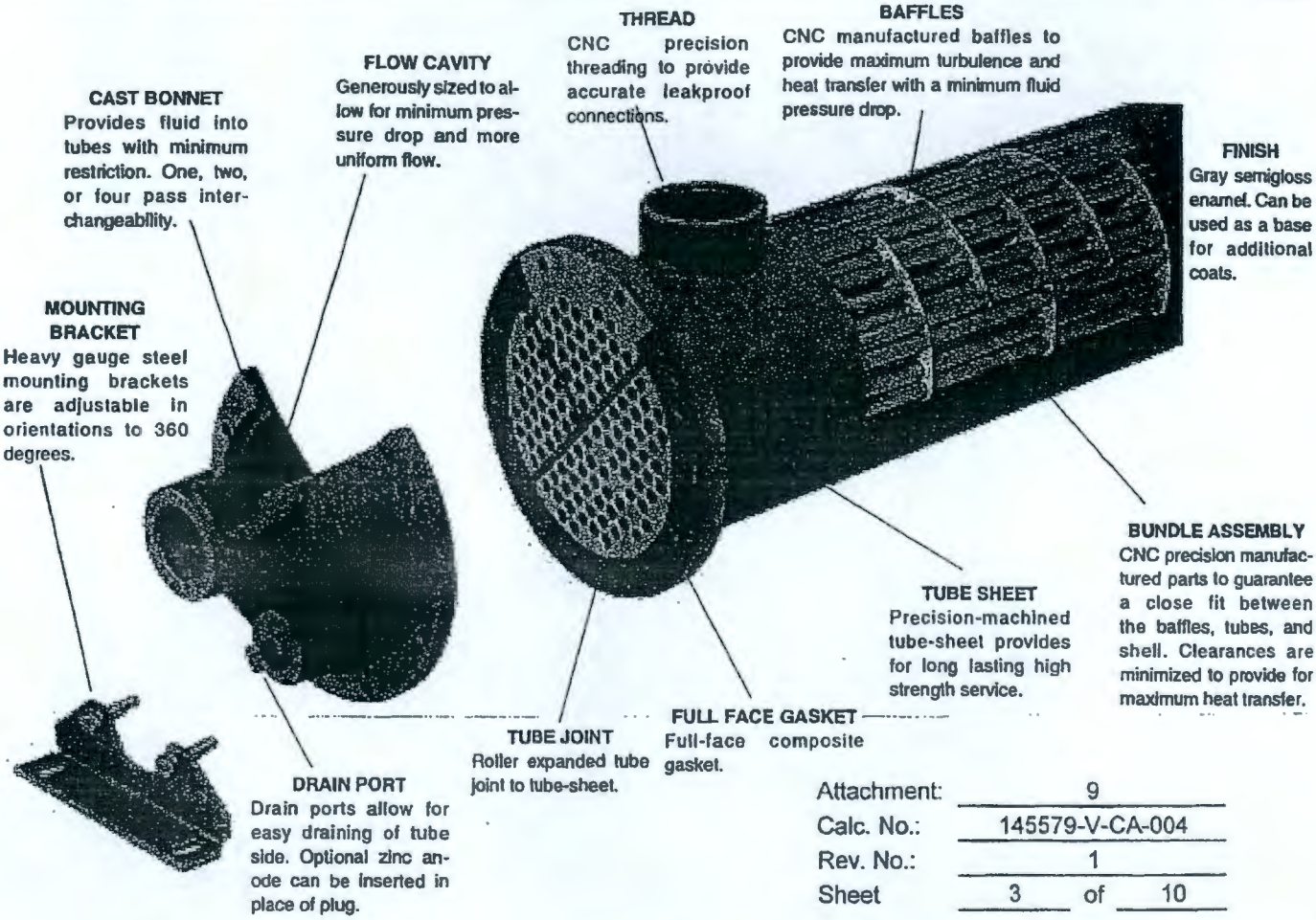

Attachment:	9		
Calc. No.:	145579-V-CA-004		
Rev. No.:	1		
Sheet	3	of	10

Originator:	DW
Date:	7 March 05
Checked by:	[illegible]
Date:	07MAR05

UNIT CODING

Example Model

CS - 1224 - 4 - 6 - TP - CNT - B - Z (Options)

- **Model**: CS, STC
- **Shell Diameter**: 600 = 3.25", 800 = 4.25", 1000 = 5.25", 1200 = 6.25", 1700 = 8.00"
- **Effective Tube Length** (12" increments)
- **Baffle Spacing Code**: 1.5", 2.0", 3.0", 4.0", 6.0", 8.0"
- **Cooling Tube Diamenter**: 6 = 3/8", 10 = 5/8"
- **Tube Side Passes**: SP = 1 pass, TP = 2 pass, FP = 4 pass
- **Tubing**: Blank = Copper; *Options*: CNT= 90/10 Cu Ni, STS = Stainless Steel, C = Carbon Steel
- **End Bonnets**: Blank = Cast Iron; *Options*: B = Bronze
- **Zinc Anode**: Z = 1 Zinc Anode, 2Z = 2 Zinc Anode etc.

STANDARD CONSTRUCTION MATERIALS & RATINGS

Standard Model	CS Series	STC Series	Standard Unit Ratings
Shell	Steel	316 Stainless Steel	Operating Pressure Tubes 150 psig
Tubes	Copper	316 Stainless Steel	
Baffle	Steel	316 Stainless Steel	Operating Pressure Shell 300 psig
Tube Sheet	Steel	316 Stainless Steel	
End Bonnets	Cast Iron	316 Stainless Steel	Operating Temperature 300 °F
Mounting Brackets	Steel	Steel	
Gasket	Hypalon Composite	Hypalon Composite	

note: AIHTI reserves the right to make reasonable design changes without notice.

Copyright © 2004 American Industrial Heat Transfer, Inc. 3905 Route 173 Zion, IL 60099 tel: 1 (847) 731-1000 fax: 1 (847) 731-1010 www.aiht.com

CS & STC Series *selection*

STEP 1: Calculate the heat load

The heat load in BTU/HR or (Q) can be derived by using several methods. To simplify things, we will consider general specifications for hydraulic system oils and other fluids that are commonly used with shell & tube heat exchangers.

Terms			
GPM	= Gallons Per Minute	Kw	= Kilowatt (watts x 1000)
CN	= Constant Number for a given fluid	T_{in}	= Hot fluid entering temperature in °F
ΔT	= Temperature differential across the potential	T_{out}	= Hot fluid exiting temperature in °F
PSI	= Pounds per Square Inch (pressure) of the operating side of the system	t_{in}	= Cold fluid temperature entering in °F
MHP	= Horsepower of the electric motor driving the hydraulic pump	t_{out}	= Cold fluid temperature exiting in °F
		Q	= BTU / HR

For example purposes, a hydraulic system has a 125 HP (93Kw) electric motor installed coupled to a pump that produces a flow of 80 GPM @ 2500 PSIG. The temperature differential of the oil entering the pump *vs* exiting the system is about 5.3°F. Even though our return line pressure operates below 100 psi, we must calculate the system heat load potential (Q) based upon the prime movers (pump) capability. We can use one of the following equations to accomplish this:

To derive the required heat load (Q) to be removed by the heat exchanger, apply ONE of the following. Note: The calculated heat loads may differ slightly from one formula to the next. This is due to assumptions made when estimating heat removal requirements. The factor *(v)* represents the percentage of the overall input energy to be rejected by the heat exchanger. The *(v)* factor is generally about 30% for most hydraulic systems, however it can range from 20%-70% depending upon the installed system components and heat being generated (ie. servo valves, proportional valves, etc...will increase the percentage required).

Formula	Example
A) Q = GPM x CN x actual ΔT	A) Q =80 x 210 x 5.3°F = 89,040 BTU/HR
B) Q = [(PSI x GPM) / 1714] x (*v*) x 2545	B) Q =[(2500x80)/1714] x .30 x 2545 = 89,090 BTU/HR
C) Q = MHP x (*v*) x 2545	C) Q =125 x .30 x 2545 = 95,347 BTU/HR
D) Q = Kw to be removed x 3415	D) Q =28 x 3415 = 95,620 BTU/HR
E) Q = HP to be removed x 2545	

Constant for a given fluid (CN)

1) Oil ..... CN = 210
2) Water..... CN = 500
3) 50% E. Glycol..... CN = 450

STEP 2: Calculate the Mean Temperature Difference

When calculating the MTD you will be required to choose a liquid flow rate to derive the cold side ΔT. If your water flow is unknown you may need to assume a number based on what is available. As a normal rule of thumb, for oil to water cooling a 2:1 oil to water ratio is used. For applications of water to water or 50 % Ethylene Glycol to water, a 1:1 ratio is common.

Formula

HOT FLUID ΔT (Oil) $= \dfrac{Q}{CN \times GPM}$

COLD FLUID Δt (Water) $= \dfrac{BTU / hr}{CN \times GPM}$

Example

$\Delta T = \dfrac{89{,}090\ BTU/hr}{210\ CN \times 80GPM}$ (from step 1,item B) $= 5.3°F$ = ΔT Rejected

$\Delta t = \dfrac{89{,}090\ BTU/hr}{500\ CN \times 40GPM}$ (for a 2:1 ratio) $= 4.45°F$ = ΔT Absorbed

T_{in} = Hot Fluid entering temperature in degrees F
T_{out} = Hot Fluid exiting temperature in degrees F
t_{in} = Cold Fluid entering temperature in degrees F
t_{out} = Cold Fluid exiting temperature in degrees F

T_{in} = 125.3 °F
T_{out} = 120.0 °F
t_{in} = 70.0 °F
t_{out} = 74.5 °F

$$\frac{T_{out} - t_{in}}{T_{in} - t_{out}} = \frac{S[\text{smaller temperature difference}]}{L\ [\text{larger temperature difference}]} = \left(\frac{S}{L}\right)$$

$$\frac{120.0°F - 70.0°F = 50.0°F}{125.3°F - 74.5°F = 50.8°F} = \frac{50.0°F}{50.8°F} = .984$$

STEP 3: Calculate Log Mean Temperature Difference (LMTD)

To calculate the LMTD please use the following method;

L = Larger temperature difference from step 2.
M = S/L number (LOCATED IN TABLE A).

$LMTD_i = L \times M$

$LMTD_i$ = 50.8 x .992 (FROM TABLE A) = 50.39

To correct the $LMTD_i$ for a multipass heat exchangers calculate R & K as follows:

Formula

$$R = \frac{T_{in} - T_{out}}{t_{out} - t_{in}}$$

$$K = \frac{t_{out} - t_{in}}{T_{in} - t_{in}}$$

Example

$$R = \frac{125.3°F - 120°F}{74.5°F - 70°F} = \frac{5.3°F}{4.5°F} = \{1.17=R\}$$

$$K = \frac{74.5°F - 70°F}{124.5°F - 70°F} = \frac{4.5°F}{55.4°F} = \{0.081=K\}$$

Locate the correction factor CF_B (FROM TABLE B)
$LMTD_c = LMTD_i \times CF_B$
$LMTD_c$ = 50.39 x 1 = 50.39

Attachment: 9
Calc. No.: 145579-V-CA-004
Rev. No.: 1
Sheet 4 of 10

Originator: DW Date: 7 March 05
Checked by: Date: 07 MAR 05

note: AIHTI reserves the right to make reasonable design changes without notice.
Copyright © 2004 American Industrial Heat Transfer, Inc.

3905 Route 173 Zion, IL 60099 tel: 1 (847) 731-1000 fax: 1 (847) 731-1010 www.aihti.com

CS & STC Series *selection*

STEP 4: Calculate the area required

Required Area sq.ft. = $\dfrac{\text{Q (BTU / HR)}}{\text{LMTD}_c \times \text{U (FROM TABLE C)}}$ $\dfrac{89{,}090}{50.39 \times 100}$ = **17.68 sq.ft.**

STEP 5: Selection

a) From TABLE E choose the correct series size, baffle spacing, and number of passes that best fits your flow rates for both shell and tube side. Note that the tables suggest minimum and maximum information. Try to stay within the 20-80 percent range of the indicated numbers.

Example

Oil Flow Rate = 80 GPM = Series Required from Table E = **1200 Series**
Baffle Spacing from Table E = **4**
Water Flow Rate = 40 GPM = Passes required in 1200 series = **4 (FP)**

b) From TABLE D choose the heat exchanger model size based upon the sq.ft. or surface area in the series size that will accommodate your flow rate.

Example

Required Area = 17.68sq.ft Closest model required based upon sq.ft. & series = **CS - 1224 - 4 - 6 - FP**

If you require a computer generated data sheet for the application, or if the information that you are trying to apply does not match the corresponding information, please contact our engineering services department for further assistance.

TABLE A- FACTOR M/LMTD = L x M'

S/L	M	S/L	M	S/L	M	S/L	M
		.25	.541	.50	.721	.75	.870
.01	.215	.26	.549	.51	.728	.76	.864
.02	.251	.27	.558	.52	.734	.77	.879
.03	.277	.28	.566	.53	.740	.78	.886
.04	.298	.29	.574	.54	.746	.79	.890
.05	.317	.30	.582	.55	.753	.80	.896
.06	.334	.31	.589	.56	.759	.81	.902
.07	.350	.32	.597	.57	.765	.82	.907
.08	.364	.33	.604	.58	.771	.83	.913
.09	.378	.34	.612	.59	.777	.84	.918
.10	.391	.35	.619	.60	.783	.85	.923
.11	.403	.36	.626	.61	.789	.86	.928
.12	.415	.37	.634	.62	.795	.87	.934
.13	.427	.38	.641	.63	.801	.88	.939
.14	.438	.39	.648	.64	.806	.89	.944
.15	.448	.40	.655	.65	.813	.90	.949
.16	.458	.41	.662	.66	.818	.91	.955
.17	.469	.42	.669	.67	.823	.92	.959
.18	.478	.43	.675	.68	.829	.93	.964
.19	.488	.44	.682	.69	.836	.94	.970
.20	.497	.45	.689	.70	.840	.95	.975
.21	.506	.46	.695	.71	.848	.96	.979
.22	.515	.47	.702	.72	.852	.97	.986
.23	.524	.48	.709	.73	.658	.98	.991
.24	.533	.49	.715	.74	.864	.99	.995

TABLE D- Surface Area

Model Number	Surface Area in Sq.ft. 3/4" O.D. Tubing Code 5	Surface Area in Sq.ft. 5/8" O.D. Tubing Code 10	Model Number	Surface Area in Sq.ft. 3/4" O.D. Tubing Code 5	Surface Area in Sq.ft. 5/8" O.D. Tubing Code 10
CS-614	–	–	CS-1236	35.3	17.7
CS-624	–	–	CS-1248	47.1	23.6
CS-636	–	–	CS-1260	58.9	29.5
			CS-1272	70.6	35.4
CS-814	–	–	CS-1284	82.3	41.3
CS-824	–	–	CS-1296	94.0	47.2
CS-836	–	–			
CS-848	–	–	CS-1724	40.1	23.6
			CS-1736	60.1	35.3
CS-1014	8.7	4.6	CS-1748	80.1	47.1
CS-1024	14.9	7.8	CS-1760	100.1	58.9
CS-1036	22.4	11.8	CS-1772	120.2	70.7
CS-1048	29.9	15.8	CS-1784	140.2	82.5
CS-1060	37.4	19.8	CS-1796	160.2	94.3
			CS-17108	180.2	106.1
CS-1224	23.6	11.8	CS-17120	200.2	117.9

TABLE B- LMTD correction factor for Multipass Exchangers

	.05	.1	.15	.2	.25	.3	.35	.4	.45	.5	.6	.7	.8	.9	1.0
2	1	1	1	1	1	1	1	.999	.993	.984	.972	.942	.908	.845	.71
3	1	1	1	1	1	1	.994	.983	.971	.959	.922	.855	.70		
4	1	1	1	1	1	.992	.980	.965	.948	.923	.840				
5	1	1	1	1	.995	.981	.965	.945	.916	.872					
6	1	1	1	1	.988	.970	.949	.918	.867	.770					
8	1	1	.977	.973	.940	.845	.740								
10	1	1	.997	.933	.835										
12	1	.993	.950	.850											
14	1	.982	.917												
16	1	.968	.885												
18	1	.930													
20	.996	.880													
25	.985	.720													
30	.972														
35	.958														
40	.940														
50	.915														

R

Attachment: 9
Calc. No.: 145579-V-CA-004
Rev. No.: 1
Sheet 5 of 10
Originator: DW
Date: 7 March 05
Checked by: [illegible]
Date: 07 MAR 05

TABLE E- Flow Rate for Shell & Tube

Shell Dia. Code	Max Non-Flow Shell Side Baffle Spacing				Liquid Flow Tube Side				
	2"	3"	4"	6"		Min	Max	Min	Max
600	15	20	25	30	–	3.5	24	2	12
800	20	34	45	60	–	4.5	38	3	21
1000	30	36	50	65	–	10	70	5	37
1200	45	50	70	100	125	15	112	7.5	56
1400	50	65	100	140	220	29	180	14	90
1600	60	80	100	160	240	45	320	25	160

TABLE C

U	TUBE FLUID	SHELL FLUID
400	Water	Water
350	Water	50% E. Glycol
100	Water	Oil
300	50% E. Glycol	50% E. Glycol
90	50% E. Glycol	Oil

note: AIHTI reserves the right to make reasonable design changes without notice.
Copyright © 2004 American Industrial Heat Transfer, Inc. 3905 Route 173 Zion, IL 60099 tel: 1 (847) 731-1000 fax: 1 (847) 731-1010 www.aihti.com

CS & STC Series *performance*

nstructions

The selection chart provided contains an array of popular sizes for quick sizing. It does not provide curves for all models available. Refer to page 44 & 45 for detailed calculation information.

Computer selection data sheets for standard or special models are available through the engineering department of American Industrial. To use the followings graphs correctly, refer to the instruction notes "1-5".

1) HP Curves are based upon a 40°F approach temperature; for example: oil leaving a cooler at 125°F, using 85°F cooling water (125°F – 85°F = 40°F).

2) The oil to water ratio of 1:1 or 2:1 means that for every 1 gallon of oil circulated, a minimum of 1 or 1/2 gallon (respectively) of 85°F water must be circulated to match the curve results.

3) OIL PRESSURE DROP CODING: ✚= 5 psi; ☆= 10 psi; O = 20 psi; △= 50psi. Curves that have no pressure drop code symbols indicate that the oil pressure drop is less than 5 psi for the flow rate shown.

4) Pressure Drop is based upon oil with an average viscosity of 100 SSU. If the average oil viscosity is other than 100 SSU, then multiply the indicated Pressure Drop by the corresponding value from corrections table A.

5) Corrections for approach temperature and oil viscosity are as follows:

$$H.P.\left(\begin{smallmatrix}\text{Removed}\\ \text{In Cooler}\end{smallmatrix}\right) = H.P.\left(\begin{smallmatrix}\text{Actual}\\ \text{Heat Load}\end{smallmatrix}\right) \times \left(\frac{40}{\text{Actual Approach}}\right) \times B.$$

HEAT ENERGY DISSIPATION RATES (Basic Stock Model)

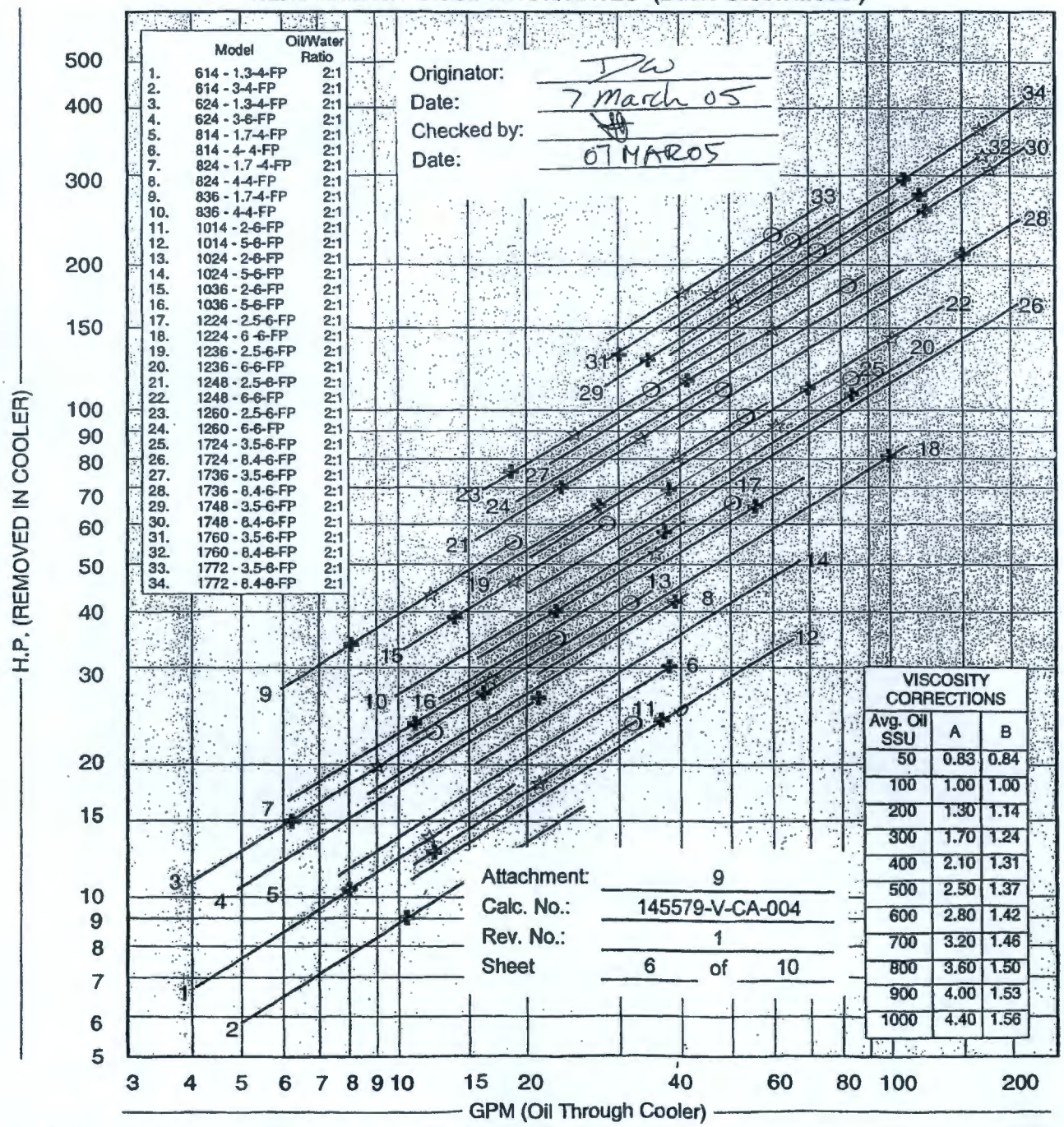

Model	Oil/Water Ratio
1. 614 - 1.3-4-FP	2:1
2. 614 - 3-4-FP	2:1
3. 624 - 1.3-4-FP	2:1
4. 624 - 3-6-FP	2:1
5. 814 - 1.7-4-FP	2:1
6. 814 - 4- 4-FP	2:1
7. 824 - 1.7 -4-FP	2:1
8. 824 - 4-4-FP	2:1
9. 836 - 1.7-4-FP	2:1
10. 836 - 4-4-FP	2:1
11. 1014 - 2-6-FP	2:1
12. 1014 - 5-6-FP	2:1
13. 1024 - 2-6-FP	2:1
14. 1024 - 5-6-FP	2:1
15. 1036 - 2-6-FP	2:1
16. 1036 - 5-6-FP	2:1
17. 1224 - 2.5-6-FP	2:1
18. 1224 - 6 -6-FP	2:1
19. 1236 - 2.5-6-FP	2:1
20. 1236 - 6-6-FP	2:1
21. 1248 - 2.5-6-FP	2:1
22. 1248 - 6-6-FP	2:1
23. 1260 - 2.5-6-FP	2:1
24. 1260 - 6-6-FP	2:1
25. 1724 - 3.5-6-FP	2:1
26. 1724 - 8.4-6-FP	2:1
27. 1736 - 3.5-6-FP	2:1
28. 1736 - 8.4-6-FP	2:1
29. 1748 - 3.5-6-FP	2:1
30. 1748 - 8.4-6-FP	2:1
31. 1760 - 3.5-6-FP	2:1
32. 1760 - 8.4-6-FP	2:1
33. 1772 - 3.5-6-FP	2:1
34. 1772 - 8.4-6-FP	2:1

VISCOSITY CORRECTIONS		
Avg. Oil SSU	A	B
50	0.83	0.84
100	1.00	1.00
200	1.30	1.14
300	1.70	1.24
400	2.10	1.31
500	2.50	1.37
600	2.80	1.42
700	3.20	1.46
800	3.60	1.50
900	4.00	1.53
1000	4.40	1.56

note: AIHTI reserves the right to make reasonable design changes without notice.

Copyright © 2004 American Industrial Heat Transfer, Inc.
3905 Route 173 Zion, IL 60099 tel: 1 (847) 731-1000 fax: 1 (847) 731-1010 www.aihti.com

CS Series *dimensions*

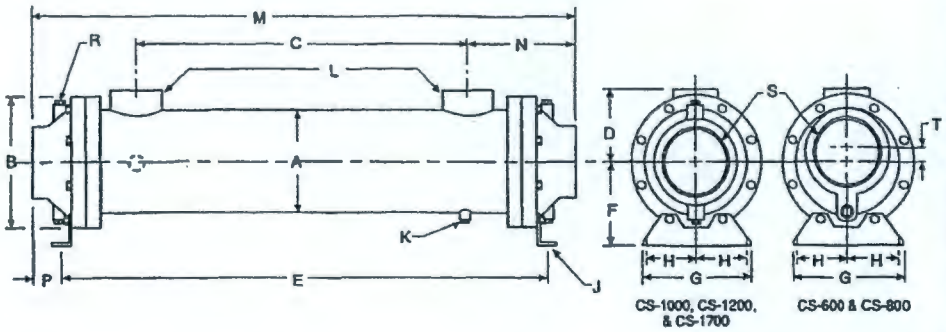

SINGLE PASS (SP)

Model	M	N	D	R	S	T
CS-614 CS-624	17.18 27.18	3.70	.40	(2) .38	1.50	.38
CS-814 CS-824 CS-836	17.88 27.88 39.88	4.44	.63	(2) .38	2.00	.50
CS-1014 CS-1024 CS-1036	19.09 29.09 41.09	5.05	.92	(4) .38	2.00	-
CS-1224 CS-1236 CS-1248 CS-1260 CS-1272	30.00 42.00 54.00 66.00 78.00	5.88	1.43	(4) .50	3.00	-
CS-1624 CS-1636 CS-1648 CS-1660 CS-1672 CS-1684	31.47 43.47 55.47 67.47 79.47 91.47	7.23	1.99	(4) .50	4.00	-

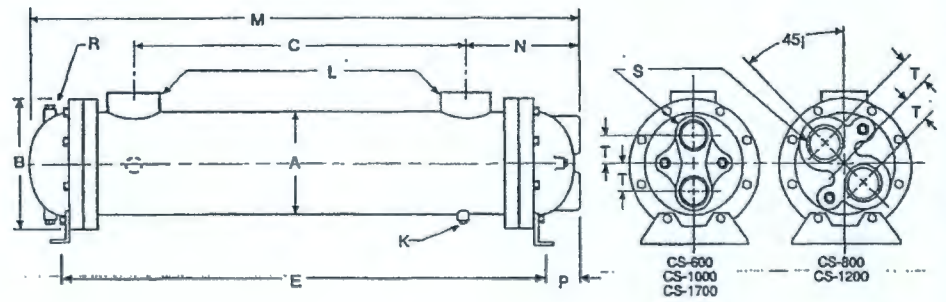

TWO PASS (TP)

Model	M	D	R	S	T
CS-614 CS-624	17.12 27.12	3.70	.38	(2) .38	1.00	1.00
CS-814 CS-824 CS-836	17.88 27.88 39.88	4.44	.63	(2) .38	1.25	1.06
CS-1014 CS-1024 CS-1036	18.62 28.62 40.62	5.00	.94	(2) .38	1.50	1.19
CS-1224 CS-1236 CS-1248 CS-1260 CS-1272	29.03 41.03 53.03 65.03 77.03	5.44	1.00	(2) .50	2.00	1.44
CS-1624 CS-1636 CS-1648 CS-1660 CS-1672 CS-1684	30.62 42.62 54.62 66.62 78.62 90.62	7.06	1.81	(2) .50	2.50	1.88

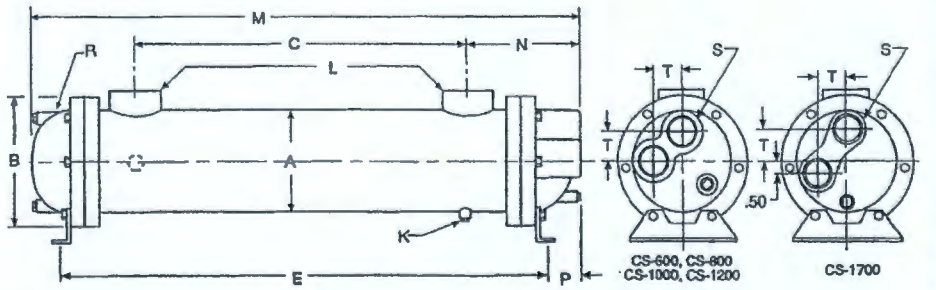

FOUR PASS (FP)

Model	M	D	R	S	T	N
CS-614 CS-624	17.12 27.12	3.70	.38	(2) .38	.75	1.00
CS-814 CS-824 CS-836	17.88 27.88 39.88	4.44	.63	(3) .38	.75	1.25
CS-1014 CS-1024 CS-1036	18.81 28.81 40.81	4.81	.75	(3) .38	1.00	1.69
CS-1224 CS-1236 CS-1248 CS-1260 CS-1272	29.13 41.13 53.13 65.13 77.13	5.44	1.00	(3) .50	1.50	2.00
CS-1624 CS-1636 CS-1648 CS-1660 CS-1672 CS-1684	29.86 41.86 53.86 65.86 77.86 89.86	7.06	1.81	(3) .50	2.00	2.50

COMMON DIMENSIONS & WEIGHTS

Model	A	B	C	D	E	F	G	H	J	K	L	Weight
CS-614 CS-624	3.25	4.50	10.00 20.00	2.31	17.00 27.00	2.75	4.18	1.62	.38ϕx0.88	(2) .25	1.00	17 24
CS-814 CS-824 CS-836	4.25	6.00	9.00 19.00 31.00	3.12	16.62 26.62 38.62	3.50	4.25	1.75	.44ϕx1.00	(2) .25	1.50	32 41 53
CS-1014 CS-1024 CS-1036	5.25	6.75	9.00 19.00 31.00	3.62	17.12 27.12 39.12	4.00	5.25	2.00	.44ϕx1.00	(2) .25	1.50	43 57 72
CS-1224 CS-1236 CS-1248 CS-1260 CS-1272	6.25	7.75	18.25 30.25 42.25 54.25 66.25	4.16	27.13 39.13 51.13 63.13 75.13	4.50	6.25	2.50	.44ϕx1.00	(2) .38	2.00	85 110 135 160 185
CS-1624 CS-1636 CS-1648 CS-1660 CS-1672 CS-1684			17.00 50 50 50 50 50		27.50						3.00	140 180 220 260 300 340

Attachment: 9
Calc. No.: 145579-V-CA-004
Rev. No.: 1
Sheet 7 of 10

Originator: DW
Date: 7 March 05
Checked by: [illegible]
Date: 07 MAR 05

Copyright © [illegible]

STC Series *dimensions*

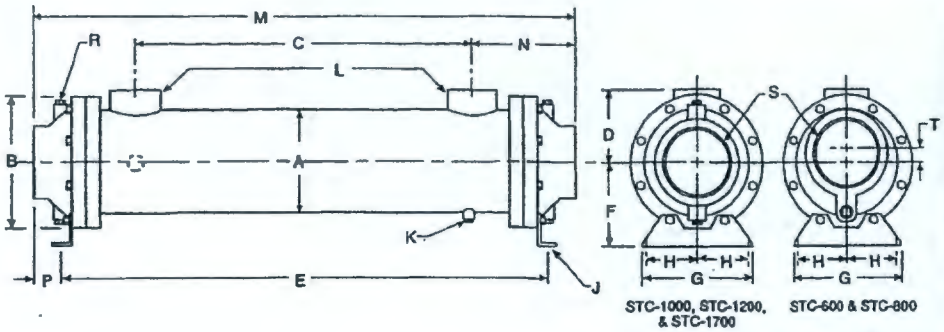

SINGLE PASS (SP)

Model	M	N	F	NPT	NPT	
STC-614 STC-624	17.18 27.18	3.70	.40	(2) .38	1.50	.38
STC-814 STC-824 STC-836	17.88 27.88 39.88	4.44	.63	(2) .38	2.00	.50
STC-1014 STC-1024 STC-1036	19.09 29.09 41.09	5.05	.92	(4) .38	2.00	-
STC-1224 STC-1236 STC-1248 STC-1260 STC-1272	30.00 42.00 54.00 66.00 78.00	5.88	1.43	(4) .50	3.00	-
STC-1724 STC-1736 STC-1748 STC-1760 STC-1772 STC-1784	31.47 43.47 55.47 67.47 79.47 91.47	7.23	1.99	(4) .50	4.00	-

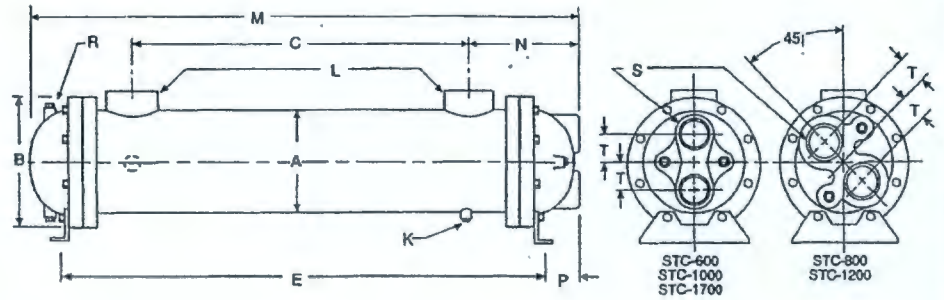

TWO PASS (TP)

Model	M	N	F	NPT	NPT	
STC-614 STC-624	17.12 27.12	3.70	.38	(2) .38	1.00	1.00
STC-814 STC-824 STC-836	17.88 27.88 39.88	4.44	.63	(2) .38	1.25	1.06
STC-1014 STC-1024 STC-1036	18.62 28.62 40.62	5.00	.94	(2) .38	1.50	1.19
STC-1224 STC-1236 STC-1248 STC-1260 STC-1272	29.03 41.03 53.03 65.03 77.03	5.44	1.00	(2) .50	2.00	1.44
STC-1724 STC-1736 STC-1748 STC-1760 STC-1772 STC-1784	30.62 42.62 54.62 66.62 78.62 90.62	7.06	1.81	(2) .50	2.50	1.88

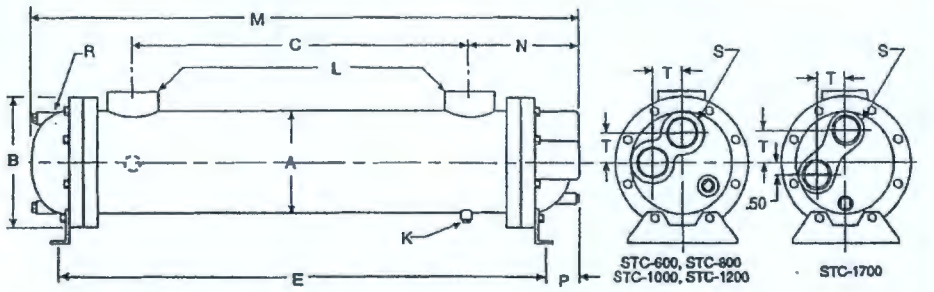

FOUR PASS (FP)

Model	M	N	F	NPT	NPT	
STC-614 STC-624	17.12 27.12	3.70	.38	(2) .38	.75	1.00
STC-814 STC-824 STC-836	17.88 27.88 39.88	4.44	.63	(3) .38	.75	1.25
STC-1014 STC-1024 STC-1036	18.81 28.81 40.81	4.81	.75	(3) .38	1.00	1.69
STC-1224 STC-1236 STC-1248 STC-1260 STC-1272	29.13 41.13 53.13 65.13 77.13	5.44	1.00	(3) .50	1.50	2.00
STC-1724 STC-1736 STC-1748 STC-1760 STC-1772 STC-1784	29.86 41.86 53.86 65.86 77.86 89.86	7.06	1.81	(3) .50	2.00	2.50

COMMON DIMENSIONS & WEIGHTS

Model	A	B	C	D	E	F	G	H	J	N	P	Approx. Weight
STC-614 STC-624	3.12	4.50	10.00 20.00	2.31	17.00 27.00	2.75	4.18	1.62	.38ϕx0.88	(2) .25	1.00	17 24
STC-814 STC-824 STC-836	4.12	6.00	9.00 19.00 31.00	3.12	16.62 26.62 38.62	3.50	4.25	1.75	.44ϕx1.00	(2) .25	1.50	32 41 53
STC-1014 STC-1024 STC-1036	5.12	6.75	9.00 19.00 31.00	3.62	17.12 27.12 39.12	4.00	5.25	2.00	.44ϕx1.00	(2) .25	1.50	43 57 72
STC-1224 STC-1236 STC-1248 STC-1260 STC-1272	6.12	7.75	18.25 30.25 42.25 54.25 66.25	4.16	27.13 39.13 51.13 63.13 75.13	4.50	6.25	2.50	.44ϕx1.00	(2) .38	2.00	85 110 135 160 185
STC-1724 STC-1736 STC-1748 STC-1760 STC-1772 STC-1784	8.00	10.	17.00		27.50						1.25	110

Attachment: 9
Calc. No.: 145579-V-CA-004
Rev. No.: 1
Sheet 8 of 10

Originator: DW
Date: 7 March 05
Checked by: [illegible]
Date: 07 MAR 05

note: AIHTI reserves the right
Copyright © 2004 America...

CS & STC Series *installation & maintenance*

PIPING HOOK-UP

A ..... Hot fluid to be cooled
B ..... Cooled fluid
C ..... Cooling water in
D ..... Cooling water out

SP ..... Single Pass
TP ..... Two Pass
FP ..... Four Pass

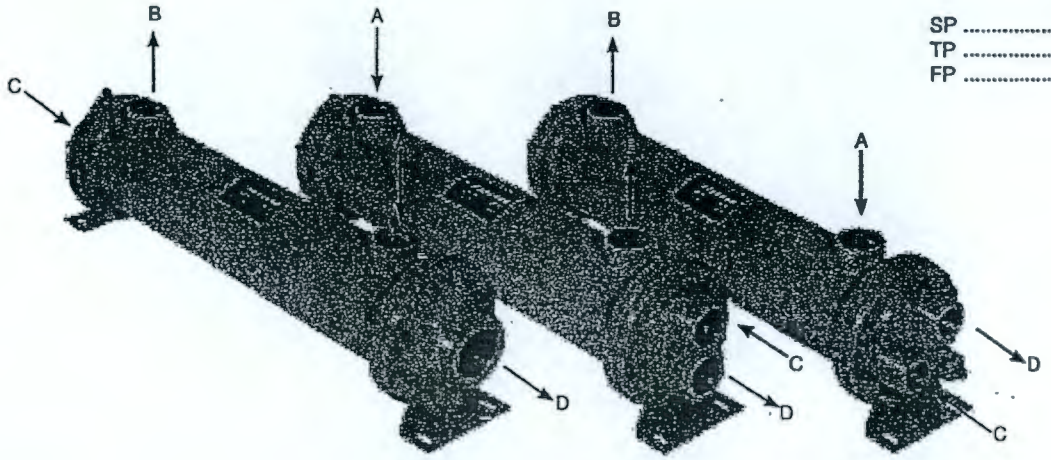

ONE PASS TWO PASS FOUR PASS

Receiving / Installation

a) Inspect unit for any shipping damage before uncrating. Indicate all damages to the trucking firms' delivery person, and mark it on the receiving bill before accepting the freight. Make sure that there is no visible damage to the outside surface of the heat exchanger. The published weight information located in this brochure is approximate. True shipment weights are determined at the time of shipping and may vary. Approximate weight information published herein is for engineering approximation purposes and should not be used for exact shipping weight. Since the warranty is based upon the unit date code located on the model identification tags, removal or manipulation of the identification tags will void the manufacturers warranty.

b) When handling the shell & tube heat exchanger, special care should be taken to avoid dropping the unit since mishandling could cause the heat exchanger to crack and leak externally. Mishandling of the unit is not covered under the manufacturers warranty. All units are shipped with partial wood/corrugated cardboard containers for safe handling.

c) Storage: American Industrial heat exchangers are protected against the elements during shipment. If the heat exchanger cannot be installed and put into operation immediately upon receipt, certain precautions are required to prevent deterioration during storage. The responsibility for integrity of the heat exchanger(s) is assumed by the user. American Industrial will not be responsible for damage, corrosion, or other deterioration of the heat exchanger during transit or storage.

Proper storage practices are important when considering the high costs of repair or replacement, and the possible delays for items which require long lead times for manufacture. The following listed practices are provided solely as a convenience to the user, who shall make their own decision on whether to use all or any of them.

1) Heat exchangers not to be placed in immediate service, require precautionary measures to prevent corrosion or contamination.
2) Heat exchangers made of ferrous materials, may be pressure-tested using compressed air at the factory. Residual oil coating on the inside surfaces of the heat exchanger(s) as a result of ushing does not discount the possibility of internal corrosion. Upon receipt, fill the heat exchanger(s) with the appropriate grade of oil or apply a corrosion preventing inhibitor for storage.
3) Corrosion protection compounds for interior surfaces for long term storage or other applications are applied solely at the request of customers. Upon request, American Industrial can provide a customer approved corrosion preventative if available when included in the original purchase order specifications.
4) Remove all dirt, water, ice, or snow and wipe dry before moving heat exchanger(s) into storage. Heat exchangers are generally shipped empty, open drain plugs to remove any accumulated condensation moisture, then reseal. Accumulation of moisture usually indicates corrosion has already started and remedial action should be taken.
5) Store in a covered, environmentally stable area. The ideal storage environment for heat exchangers is in a dry, low-humidity atmosphere which is sealed to prevent the entry of blowing dust, rain, or snow. Maintain in atmospheric temperatures between 70°F and 105°F (Large temperature swings may cause condensation and moisture to form on steel components, threads, shell, etc...) Use thermometers and humidity indicators and maintain the atmosphere at 40% relative humidity, or lower.

d) Standard Enamel Coating: American Industrial provides its standard products with a normal base coat of oil base air cure enamel paint. The enamel paint is applied as a temporary protective and esthetic coating prior to shipment. While the standard enamel coating is durable, American Industrial does not warranty it as a long-term finish coating. It is strongly suggested that a more durable final coating be applied after installation or prior to long-term storage in a corrosive environment to cover any accidental scratches, enhance esthetics, and further prevent corrosion. It is the responsibility of the customer to provide regular maintenance against chips, scratches, etc... and regular touch up maintenance must be provided for long-term benefits and corrosion prevention.

e) Special Coatings: American Industrial offers as customer options, Air-Dry Epoxy, and Heresite (Air-Dry Phenolic) coatings at additional cost. American Industrial offers special coatings upon request, however American Industrial does not warranty coatings to be a permanent solution for any equipment against corrosion. It is the responsibility of the custo ... vatches, etc... and ... -term benefits and ...

f) Ar ... lied should be insta ... ing of system desi ... bly. Verify the servi ... ell & tube heat excl ... t fall within the par ... anger, contact our ...

Attachment:	9
Calc. No.:	145579-V-CA-004
Rev. No.:	1
Sheet	9 of 10
Originator:	DW
Date:	March 7, 05
Checked by:	
Date:	07 MAR 05

note: AIHTI reserves the right to make reasonable design changes without notice.
Copyright © 2004 American Industrial Heat Transfer, Inc. 3905 Route 173 Zion, IL 60099 www.aiht.com

CS & STC Series *installation & maintenance*

g) Plan the installation to meet the requirements indicated on the piping installation diagram as illustrated above. It is recommended to put the hot uid to be cooled through the shell side and the cold uid through the tube side. The indicated port assembly sequence in the diagram maximizes the performance, and minimizes the possibility of thermal shock. In instances where the uids are required to be reversed, *hot uid in the tubes and cold uid in the shell* the heat exchanger will work with reduced performance. Installation may be vertical or horizontal or a combination thereof. However, the installation must allow for complete draining of the heat exchanger regardless of single pass, two pass, or four pass construction. Complete drainage is important to prevent the heat exchanger from freezing, over-heating of a uid, or mineral deposit buildup.
For fixed bundle heat exchangers, provide sufficient clearance at one end to allow for the removal or replacement of tubes. On the opposite end, provide enough space to allow removal of the complete bonnet to provide sufficient clearance to permit tube rolling and cleaning. Allow accessible room for scheduled cleaning as needed. Include thermometer wells and pressure gauge pipe ports in piping to and from the heat exchanger located as close to the heat exchanger as possible. For more information please contact American Industrial.

h) It is recommended to use exible hose wherever possible to reduce vibration and allow slight movement. However, hoses are not required. Hydraulic carrying lines should be sized to handle the appropriate ow and to meet system pressure drop requirements based upon the systems parameters, and not based upon the units supply and return connection size. We recommend that a low cracking pressure direct acting relief valve be installed at the heat exchanger inlet to protect it from pressure spikes by bypassing oil in the event the system experiences a high ow surge. If preventative filtration is used it should be located ahead of the cooler on both shell and tube side to catch any scale or sludge from the system before it enters the cooler. Failure to install filters ahead of the heat exchanger could lead to possible heat exchanger failure due to high pressure if the system filters plug.

i) Standard shell & tube coolers are built with a rolled tube-sheet construction. However, the differential operating temperature between the entering shell side uid and the entering tube side uid should not exceed 150°F. If this condition exists, a severe thermal shock could occur leading to product failure and mixing of the uids. For applications with a differential temperatures of 150°F or more, we recommend using a series with a oating tube-sheet, u-tube, or expansion joint to reduce the potential for the effects of thermal shock.

j) Water requirements vary from location to location. If the source of cooling water is from other than a municipal water supply, it is recommended that a water strainer be installed ahead of the heat exchanger to prevent dirt and debris from entering and clogging the ow passages. If a water modulating valve is used it is recommended to be installed at the inlet to the cooler to regulate the water ow.

k) For steam service, or other related applications, please consult our engineering department for additional information.

Maintenance
a) Inspect the heat exchanger for loosened bolts, connections, rust spots, corrosion, and for internal or external uid leakage. Any corroded surfaces should be cleaned and recoated with paint.

b) Shell side: In many cases with clean hydraulic system oils it will not be necessary to ush the interior of the shell side of the cooler. In cir-
cumstances where the qual
side should be disconnecte
ushing oil/solvent to remo
severe cases where the unit
solvent, the heat exchange
cooling performance.

c) Tube side: In many case
of the heat exchanger due t
corrosion, mud, sludge, sea
clean water or any good qu

Attachment:	9
Calc. No.:	145579-V-CA-004
Rev. No.:	1
Sheet	10 of 10
Originator:	DW
Date:	7 March 05
Checked by:	
Date:	07 MAR 05

the particular material of construction. With straight tube heat exchangers you can use a rod to carefully push any debris out of the tubes.

d) Zinc anodes are normally used to reduce the risk of failure due to electrolysis. Zinc anodes are a sacrificial component designed to wear and dissolve through normal use. Normally, zinc anodes are applied to the water supply side of the heat exchanger. Depending upon the amount of corrosive action, one, two, three, or more anodes can be applied to help further reduce the risk of failure. American Industrial Heat Transfer, Inc. offers zinc anodes as an option, to be specified and installed at the request our customers. It is the responsibility of the customer to periodically check and verify the condition of the zinc anode and replace it as needed.

Applications vary due to water chemical makeup and quality, material differences, temperature, ow rate, piping arrangements, and machine grounding. For those reasons, zinc anodes do not follow any scheduled factory predetermined maintenance plan moreover they must be checked routinely by the customer, and a maintenance plan developed based upon the actual wear rate.

If substantial wear occurs or zinc dissolves without replacement, premature failure or permanent damage may occur to the heat exchanger. American Industrial does not warranty customer applications. It is the responsibility of the customer to verify and apply the proper system materials of construction and overall system requirements. Failures resulting from properly applied or misapplied use of zinc anode(s) into non-specified or specified applications will be the sole responsibility of the customer.

e) A routine maintenance schedule should be developed and adjusted to meet your systems requirements based upon water quality, etc....Failure to regularly maintain and clean your heat exchanger can result in a reduction in operational performance and life expectancy.

Note: *Since applications can vary substantially, the Installation and maintenance information contained in this catalog should be used as a basic guideline. The safe installation, maintenance, and use of any American Industrial Heat Transfer, Inc. heat exchanger are solely the responsibility of the user.*

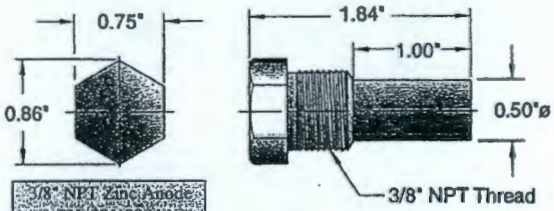

3/8" NPT Zinc Anode
PN: 301-0004

AB-400 thru AB-1000
AA-400 thru AA-1000
CS-600 thru CS-1000

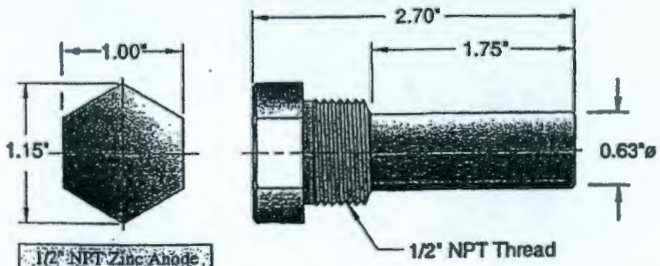

1/2" NPT Zinc Anode
PN: 301-0003

AB-1200 thru AB-2000
AA-1200 thru AA-1600
CS-1200 thru CS-1700

note: AIHTI reserves the rig
Copyright © 2004 Ame
60099 tel: 1 (847) 731-1000 fax: 1 (847) 731-1010 www.aihti.com

Figure 1. Subcontractor Calculation Review Checklist.

Page 1 of 1

Subject: Off-Gas Chiller Calculation

The subject document has been reviewed by the undersigned.
The checker reviewed and verified the following items as applicable.

Documents Reviewed: 145570-V-CA-004 Rev. 1

Analysis Performed By: AMEC

- Design Input
- Basic Assumptions
- Approach/Design Methodology
- Consistency with item or document supported by the calculation
- Conclusion/Results Interpretation
- Impact on existing requirements
- _____

Checker (printed name, signature, and date)

Thomas H May Thomas H May 4/19/06

Organizational Manager (printed name, signature and date)

David H Shuford David H Shuford 4/19/06

provide calculation check sheet

This page intentionally left blank.