START

9513334.0283

153

0039780

Department of Energy

Richland Operations Office
P.O. Box 550
Richland, Washington 99352

DEC 15 1994

95-PCA-087

Mr. George B. Schlender, Program Manager
Larger On-site Municipal
Wastewater Reuse Systems
State of Washington
Department of Health
1500 W. 4th, Suite 305
Spokane, Washington 99204

Dear Mr. Schlender:

OPERATIONS AND MAINTENANCE (O&M) MANUAL AND CERTIFICATION OF INSPECTION AND INSTALLATION FORM FOR THE SANITARY SEWER COLLECTION AND SEPTIC TANK SYSTEM NUMBER 6607-11, PROJECT B-595 SEPTIC SYSTEM, HANFORD WASTE VITRIFICATION PLANT (HWVP)

Enclosed is the O&M Manual and Certification of Inspection and Installation form for sanitary sewer collection and septic tank system number 6607-11, Project B-595, HWVP. These enclosures are being submitted in accordance with Washington Administrative Code 246-272-080.

Should you have any questions, please contact Mr. H. M. Rodriguez, of my staff, on (509) 376-6421.

Sincerely,

James E. Rasmussen

James E. Rasmussen, Acting Program Manager
Office of Environmental Assurance
Permits, and Policy

EAP:HMR

Enclosures

cc w/encl:
EDMC, WHC
E. Brown, DOH
J. R. Wilkenson, CTUIR
D. Powaukee, NPT
R. Jim, YIN
J. Hensley, Ecology

cc w/o encl:
J. J. Luke, WHC
G. L. Levan, UCAT
R. F. Stanley, Ecology

DEC 1994
RECEIVED
EDMC

9513334.0284

SANITARY SEWER SYSTEM

OPERATIONS & MAINTENANCE MANUAL

HANFORD WASTE VITRIFICATION PLANT

U.S. DEPARTMENT OF ENERGY
RICHLAND OPERATIONS OFFICE

FLUOR DANIEL
ADVANCED TECHNOLOGY DIVISION
CONTRACT 8457

DOE CONTRACT NO.
DE-AC06-86RL 10838

DEC 1994
RECEIVED
EDMC

9513334.0285

OPERATION AND MAINTENANCE MANUAL

FOR

SANITARY SEWER COLLECTION AND
SEPTIC TANK SYSTEM NO. 6607-11

HANFORD WASTE VITRIFICATION PLANT

Prepared by
Fluor Daniel, Inc.

TABLE OF CONTENTS

TABLE OF CONTENTS 2

SIGNATURE PAGE 4

1.0 INTRODUCTION 5

2.0 SYSTEM DESCRIPTION 5
- 2.1 Sewer Collection System 5
- 2.2 Septic Tank Structure 6
- 2.3 Drainfield System 7

3.0 SYSTEM OPERATION 11
- 3.1 Normal Operating Conditions 11
- 3.2 Off-Normal Operating Conditions 11
  - 3.2.1 System Blockage/Sewage Spill 12
  - 3.2.2 Siphon Malfunction 12
  - 3.2.3 Septic Tank/Drainfield Emergency Repair 13

4.0 PERIODIC INSPECTION 13
- 4.1 Septic Tank Structure 14
  - 4.1.1 Sludge Thickness and Scum Level 14
  - 4.1.2 Effluent Filters 14
  - 4.1.3 Septic Tank Vent Filters 14
- 4.2 Drainfields 14
  - 4.2.1 Dose Counters 14
  - 4.2.2 Monitoring Ports 15

5.0 SYSTEM MAINTENANCE 15
- 5.1 Introduction 15
- 5.2 Safety Precautions 16
- 5.3 Tools and Equipment Requirements 16
- 5.4 Septic Tank Structure Inspection 17
- 5.5 Effluent Filters Inspection 18
- 5.6 Siphons Inspection 20
- 5.7 Septic Tank Structure Vent Filters Inspection 20
- 5.8 Dose Counters Inspection 21
- 5.9 Drainfield Inspection 21
- 5.10 Disposition of Inspection Findings 22

6.0 RECORD KEEPING 23

7.0 REFERENCES 23

APPENDIX A - SANITARY SEWER SYSTEM LAYOUT PLAN DRAWING 24

APPENDIX B - SEPTIC TANK STRUCTURE CROSS-SECTIONAL VIEW 26

APPENDIX C - EVALUATION FORMS/MEASUREMENT DEVICE DRAWINGS . . . 28

APPENDIX D - EQUIPMENT AND MATERIAL CATALOG INFORMATION 33

APPENDIX E - CONSTRUCTION SPECIFICATIONS 131

SIGNATURE PAGE

Compliance with this document is required to meet the requirements of Washington Administrative Code (WAC) 246-272. Changes to this document shall not be without concurrence of the Washington Department of Health and the Project Engineer.

APPROVED

Fluor Daniel, Inc.

BRUCE R. EISENBISE
STATE OF WASHINGTON
0029374
REGISTERED
PROFESSIONAL ENGINEER
EXPIRES 11/25/95

11/9/94

Bruce R. Eisenbise, Project Engineer

Westinghouse Hanford Company

Projects — Date: 11/16/94

Sanitary Systems Maintenance — Date: 11/16/94

1.0 INTRODUCTION

The purpose of this Operation and Maintenance (O&M) manual is to provide the user with a guide for operating and maintaining the Hanford Waste Vitrification Plant (HWVP) Sanitary Sewer System. The O&M manual contains operating procedures and makes recommendations for the periodic inspection and maintenance of system facilities.

2.0 SYSTEM DESCRIPTION

The HWVP sanitary sewer system is designed for a total daily flow of 11,820 gallons per day. The system is comprised of the following subsystems and components:

2.1 Sewer Collection System

The general arrangement of the HWVP sanitary sewer collection system is shown in Appendix A. The system consists of an 8-inch diameter polyvinyl chloride (PVC) sewer main that receives sewage from the TOB, the HWVP guardhouse, and the HWVP safety trailer. The differences in elevations between the sewer main's inlets and its final outlet locations allows sewage to free-flow by gravity through the sewer main directly into the septic tank.

Sewer manholes, which provide access to the collection system for inspection and cleaning, are located at all horizontal and vertical changes in pipe direction and at all straight sections of pipe exceeding 400 feet. Sewer manholes are 4 feet in diameter with 2-foot diameter cast iron frames and covers. Manhole steps are ½-inch diameter steel bars encapsulated in polypropylene to prevent corrosion.

In summary, the sanitary sewer collection system is comprised of the following key subsystems and components:

2.1.1 One 8-inch diameter gravity sewer main (1650 lineal feet).

2.1.2 Seven manholes.

2.2 Septic Tank Structure

The septic tank structure is a cast-in-place, reinforced concrete structure, located below grade, that houses or provides mounting for the septic tank equipment and components. The structure contains two interior concrete walls or baffles. The first baffle separates the first two compartments, which are referred to as the primary and secondary compartments of the septic tank. The second baffle forms the third compartment, which is referred to as the dosing tank. A cross-sectional view of the septic tank compartments and dosing tank is illustrated in Appendix B.

The septic tank structure has three manholes that provide access to the primary compartment of the septic tank (manholes "C" through "E"), one manhole that provides access to the secondary compartment and the effluent filters (manhole "B"), and one manhole that provides access to the dosing tank (manhole "A"). Except for the manhole located above the effluent filters, all of the manholes are 24-inches in diameter. To facilitate the removal and replacement or cleaning of the effluent filters, the secondary compartment manhole is 36-inches in diameter.

In summary, the septic tank structure is comprised of the following subsystems and components.

2.2.1 One, 2-compartment, 17,700 gallon septic tank.

2.2.2 Two effluent filters (screen assemblies).

2.2.3 Two vent filters (activated carbon filters).

2.2.4 One 1480 gallon dosing tank.

2.2.5 Two 6-inch diameter siphons.

2.2.6 Five manholes.

2.3 Drainfield System

Each drainfield is 15 feet wide and 339 feet in length. The drainfields are supplied with effluent by two 8-inch diameter transport pipelines connected directly to the outlets of the dosing tank siphons. A series of manually operated control valves located on the transport pipelines allow the drainfields to be isolated for maintenance purposes. The control valves also allow the drainfields to be rotated for their semiannual resting cycles. In summary, the drainfield system is comprised of the following subsystems and components:

2.3.1 Three drainfields (two active, one standby).

2.3.2 One drainfield reserve area.

2.3.3 Three drainfield dose counters, one for each field.

2.3.4 Six drainfield monitoring ports, two for each field.

2.3.5 Six drainfield control valves.

Raw sewage from the collection system enters the primary compartment of the septic tank structure and flows through a vertical T-type tube. The tube is open at both ends: the upper end serves as a vent; the lower end directs the influent downward toward the bottom of the compartment. The treatment of the influent begins in the primary compartment through sedimentation and the biological decomposition of organic matter. This treatment process occurs naturally and it results in the formation of four distinct layers: 1) a layer of stable sludge that forms at the bottom of the tank, 2) a layer of actively digesting sludge above the stable sludge, 3) a zone of supernatant liquid above the digesting sludge, and 4) an uppermost layer of scum. The initial decomposition process occurs in the scum layer where partially decomposed solids settle out and fall to the bottom of the tank, forming the layers of actively digesting and stable sludge. As the collection system continues to supply raw sewage to the primary compartment, the level in the compartment rises, forcing the supernatant liquid from the relatively clear zone near the upper portion of the compartment through a connecting PVC pipe into the bottom of the secondary compartment.

The secondary compartment permits further settling and decomposition of the remaining suspended solids in the supernatant liquid. As additional supernatant flows from the primary to the secondary compartment, the supernatant in the secondary compartment is directed through two effluent filters where final removal of gross solids occurs.

The effluent filters (screen assemblies) are cylindrical screens mounted inside PVC housings that are referred to as screened vaults. The vaults are positioned vertically inside the secondary

compartment of the septic tank structure near the concrete wall (baffle) that separates the septic tank from the dosing tank. In the middle of each vault, equally spaced around the periphery, are eight 1¼-inch diameter holes which allow effluent to enter the vault. Within each vault are two circular effluent screens which filter large suspended solids from the liquid. The effluent filters are cylindrical polyethylene screens. When an effluent screen is positioned inside its vault, an annulus is formed between the screen and the inside wall of the vault. Supernatant enters the vault through the 1¼-inch influent holes, flows around the annulus, and then flows inward through the polyethylene screen toward the center of the vault. A vertical 1¼-inch diameter perforated intrusion pipe mounted in the center of the vault collects the filtered supernatant that has passed through the effluent screen and directs it downward through a flow modulating orifice, and through the flexible outlet hose at the base of the vault, into the dosing tank.

To facilitate the removal of the vault from the septic tank for inspection and cleaning purposes, drain ports with neoprene flap check valves located at the base of the housing open to drain liquid from the vault into the septic tank.

The dosing tank is a temporary storage basin. It allows the incoming effluent to gradually accumulate until the level in the dosing tank is sufficient to operate one of two siphons that are mounted in the bottom of the tank. When a siphon operates (i.e., see Siphons, on page 80 of Appendix D, for a detailed explanation of the operation of the siphons), the dosing tank drains through the siphon and through an outlet pipe into the drainfield. Periodic draining of the dosing tank (as opposed to allowing effluent to continuously flow into the drainfield), provides the

drainfield with a "resting period" that helps to prevent clogging. Depending upon the amount of flow entering the dosing tank, the siphons alternately discharge to separate drainfields approximately four times each day. However, for various and sundry reasons such as minor fluctuations in the inflow rate, possible turbulence in the dosing tank, etc., the siphons may not alternate after each and every dose cycle. The siphon manufacturer reports that one of the siphons may sit idle through 2 or 3 dose cycles before alternating. As a general guide, for every 10 dose cycles the siphons should not miss alternating by more than 2 cycles.

The drainfield system consists of two active fields, one standby field, and a reserve area for the construction of a fourth field in the event of a field failure. Each drainfield has a distribution network of pipelines consisting of four 2½-inch diameter manifold lines and forty 1¼-inch diameter distribution laterals. Effluent flows by gravity from the dosing tank through the manifold lines into the distribution laterals. Each distribution lateral has fourteen 3/16-inch diameter orifice holes that restrict effluent flow from the laterals into the drainfield. The rate of flow discharged by the siphons to the drainfields exceeds the capacity of the distribution laterals to discharge flow through the orifice holes. As such, a back-pressure (equivalent to the height of the liquid above the orifice holes) occurs within the laterals and manifold lines, causing the effluent to discharge under pressure into the drainfield. This configuration of drainfield dimensions, pipeline diameters, and the flow restriction created by the size of the orifices in the laterals, allows effluent under pressure to be evenly distributed throughout each drainfield.

Each drainfield has a dose counter that records the number of times the drainfield is dosed with effluent. The dose counters are mounted aboveground at the south end of the drainfield area.

3.0 SYSTEM OPERATION

3.1 Normal Operating Conditions

The HWVP sanitary sewer system is a free-flow-type gravity system from the sewer collection main to the primary compartment of the septic tank structure, and a restricted-flow (flow rate controlled by orifice sizes) gravity system from the outlets of the dosing tank siphons to the drainfields. This configuration eliminates the need for lift pumps or other mechanical devices to transfer sewage from one point to another. Consequently, with the exception of periodic monitoring (i.e., reference page 13, **Periodic Inspection**), no operator involvement is required for normal system operations.

3.2 Off-Normal Operating Conditions

Operating conditions that deviate from the normal operation of the HWVP sanitary sewer system are considered "off-normal" operations. Typical off-normal conditions are listed below. ***Any irregular system operation or sewage spill must be immediately reported to the Manager, Sanitary Systems Maintenance.***

3.2.1 System Blockage/Sewage Spill

A system blockage is evidenced by the overflow of sewage from the septic tank or from a collection system manhole located upstream of the blockage location. Before inspecting the system to locate and clear the blockage, reduce or stop all influent into the sewer collection system from the following sources:

NAME OF BUILDING	HANFORD SITE FACILITY IDENTIFICATION NUMBER
TWRS Office Building (TOB)	2704HV
HWVP Guardhouse	2701HV
HWVP Safety Trailer	MO723

3.2.2 Siphon Malfunction

In the event that one of the siphons continually does not alternate, as evidenced by no change indicated on the dose counters, one method of attempting to correct a siphon malfunction is to close all of the drainfield control valves, refill the dosing tank with water to its normal full level (using a water truck), and reopen the control valves. For other approaches to correcting dosing tank siphon malfunctions, refer to the "Trouble-Shooting Guide for Siphons in Dosing Tanks" on page 89 in Appendix D.

If one siphon appears to be functioning more than the other, as evidenced by a significant (20% or more) variance between the drainfield dose count readings, the air tube on the dominant siphon can be adjusted slightly to make it alternate more

consistently. This is a minor operation but the adjustment amount can be sensitive. Mr. Rod Gross, technical representative with the Envirex Company (manufacturer of the siphons) can be contacted at telephone (414) 521-8282 for technical assistance concerning the amount and direction of adjustment.

3.2.3 Septic Tank/Drainfield Emergency Repair

Emergency repairs may be made to the drainfield, dosing tank, or secondary compartment of the septic tank structure without interrupting flow to the primary compartment. The primary compartment has a storage volume equal to approximately 24 hours of system operation. By using a pumper truck to remove the contents of the primary compartment immediately before maintenance, repairs requiring less than 24 hours to complete may be performed without making alternate arrangements for sewage disposal (e.g., establishing continuous pumping operations from the primary compartment into sewage disposal trucks, arranging an emergency bypass around the components downstream of the primary compartment).

4.0 PERIODIC INSPECTION

Regular inspection of system components is necessary to insure the integrity of the system for its design life. Periodic inspections shall be made in accordance with the frequencies listed in the **INSPECTION RECORD FORM** on page 29. Observations and findings obtained during the inspections shall be recorded on the **EVALUATION FORM** on page 30. Key inspection points are described below:

4.1 Septic Tank Structure

4.1.1 Sludge Thickness and Scum Level

Annually check the sludge and scum levels in the primary compartment of the septic tank structure using the measuring devices shown on pages 31 and 32.

4.1.2 Effluent Filters

Monthly remove the "B" manhole cover and visually inspect the condition of the effluent filters. Annually, after pumping sludge from the septic tank, clean the effluent filter screens and inspect the perforations in the intrusion pipe for blockage.

4.1.3 Septic Tank Vent Filters

The septic tank structure vent filters (activated carbon filters) are designed to prevent foul odor from escaping the septic tank, and they are designed for one or more years of operation without requiring service. During the weekly observation of the dose counters, make note of any foul odor emanating from the vent filters, and replace the activated carbon as soon as odors are detected.

4.2 Drainfields

4.2.1 Dose Counters

Weekly record the reading on the drainfield dose counters. Compute the average daily flow to ascertain if the system design capacity has been exceeded. The average daily

flow calculation is shown below, and it is tabulated in Appendix C, **EVALUATION FORM**, on page 30.

N = Number of calendar days since last reading.

D = Difference in the number of dose readings between previous and current readings.

V = Dose volume during current period, D x 1,480 gallons/dose.

Q = Average daily flow in gallons/day (V/N).

4.2.2 Monitoring Ports

The monitoring ports, two ports in each soil absorption field, should be inspected monthly for the presence of liquid. The continued presence of liquid in a monitoring port indicates that the associated absorption field is not properly draining, and that early rotation of the drainfield to a resting (inactive) cycle may be required (contact the Manager, Sanitary Systems Maintenance).

5.0 SYSTEM MAINTENANCE

5.1 Introduction

The following procedures and guidelines establish a uniform criteria for septic tank structure inspection in order to determine tank integrity and pump-out requirements. The inspection routine given for the drainfield aids in revealing its level of performance.

5.2 Safety Precautions

5.2.1 A septic tank structure is a confined space. Follow the requirements of WHC-CM-4-40, Industrial Hygiene Manual (Subsection 3.1, Confined Space Entry), before entry into any of the three compartments of the septic tank structure.

5.2.2 Guard against back injuries when removing manhole covers and effluent filters by utilizing the tripod/hoist assembly on top of the septic tank to remove covers and manipulate effluent filters.

5.2.3 Guard against trip and fall hazards created by uncovered manholes by utilizing warning cones and barriers where needed.

5.3 Tools and Equipment Requirements

5.3.1 Scum measurement device.

5.3.2 Sludge measurement device.

5.3.3 Tape measure.

5.3.4 Illuminating device (flashlight/mirror).

5.3.5 Tripod/hoist (chain-fall) assembly.

5.3.6 Water hose and fittings for connection to fire hydrant or other available water source for equipment washing.

5.3.7 2x4 scrap lumber (two 4 foot lengths).

5.3.8 Four warning cones and four barriers.

5.4 Septic Tank Structure Inspection

5.4.1 Remove the "C" manhole cover from the top of the septic tank structure and visually locate the top of the vertical section of pipe that directs supernatant from the primary compartment into the secondary compartment. (The "C" manhole cover is the center cover on top of the septic tank - see Appendix B).

5.4.2 With the hinge of the scum measurement device closed, the cord pulled taut, and the flap facing to the north toward the drainfield, insert the scum measurement device into the septic tank alongside the vertical section of pipe. Insert the device so that the flap end is approximately 12 feet below the manhole rim.

5.4.3 Release the cord slightly to open the flap, and raise the device until the flap contacts the bottom of the vertical section of pipe (i.e., resistance will be felt as the measurement device is raised and the flap catches on the bottom of the pipe). Record the distance from the bottom of the pipe to the top of the rim of the manhole and enter this value in Item 1 of the **EVALUATION FORM.**

5.4.4 Rotate the scum measurement device 180 degrees and raise it gently until resistance is felt when the flap contacts the bottom of the scum layer. Record the distance from the bottom of the scum layer to the rim of the manhole and enter this value in Item 2 of the **EVALUATION FORM.** Subtract Item 1 from Item 2 to find the distance from the bottom of the outlet pipe to the bottom of the scum layer and record this value in Item 3. If the value is 3-inches or less, pump the septic tank.

5.4.5 Insert the sludge measurement device into the bottom of the septic tank approximately 13 feet below the manhole rim. Hold the device in place for three to five minutes to allow sludge to absorb into the towel.

5.4.6 Remove the device and measure the thickness of the sludge layer at the bottom of the tank as evidenced by the sludge absorbed into the towel. Record this value in Item 4 of the **EVALUATION FORM**. If this value is 8-inches or more, pump the septic tank.

5.4.7 Replace the manhole cover.

5.4.8 Dispose of the towel and clean both measurement devices.

5.5 Effluent Filters Inspection

5.5.1 Secure a yoke to the lifting points on the "B" manhole cover.

5.5.2 Position the tripod/hoist assembly (located on top of the septic tank) over the manhole cover and connect the lifting hook from the hoist (chain-fall) to the yoke.

5.5.3 Lift the manhole cover 6 to 12 inches above the manhole rim, push the cover to one side, lower it to the ground, and disconnect the hook from the yoke.

5.5.4 Lower the chain-fall hook into the manhole.

5.5.5 Prepare to remove one filter by unsnapping the clip that is used to secure the filter to the eye-bolt anchored to the manhole shaft.

5.5.6 Place the stainless steel cable sling that is used to suspend the filter from the sides of the manhole shaft onto the chain-fall hook.

5.5.7 Slowly begin raising the filter with the chain-fall while allowing sufficient time for the flap valves at the base of the filter to permit liquid to drain from the filter into the septic tank. Continue slowly raising the filter until all of the water has drained from the filter and the filter is suspended over the manhole opening.

5.5.8 Lower the filter to the ground and remove the screen from the outer housing by pulling on the plastic straps attached to the top of the screen.

5.5.9 Place two lengths of 2 x 4 scrap lumber across the top of the manhole opening.

5.5.10 Position the screen on top of the scrap lumber directly over the manhole and provide vertical support for the screen to prevent it from moving. Scrape the screen to dislodge sludge and debris and direct the sludge through the manhole into the septic tank.

5.5.11 Once the heavy solids are removed, wash the screen with raw water by directing the water spray through the screen into the manhole.

5.5.12 Wash the filter housing in the same manner.

5.5.13 Reassemble the screen and filter housing.

5.5.14 Inspect the condition of the discharge hose connected to the bottom of the filter housing. Replace the hose as required.

5.5.15 Lower the filter into the manhole, correctly align and position the filter, and snap the retaining clip. Remove the cable sling from the chain-fall hook and reconnect it to the mount on the manhole shaft.

5.5.16 Remove, clean, and replace the second effluent filter according to the previous instructions.

5.5.17 Wash the top of the septic tank, the scrap lumber, and the manhole shaft.

5.5.18 Replace the manhole cover.

5.6 Siphons Inspection

5.6.1 Remove the "A" manhole cover.

5.6.2 Illuminate the interior of the dosing tank to view the siphons and visually confirm that both siphon hoods and connecting air tubes are in place.

5.6.3 Observe the opening of the dosing tank's vent/overflow pipe and verify that it is open and free of sludge (the pipe is located within the north wall of the dosing tank above the normal dosing tank water level).

5.6.4 Replace the "A" manhole cover.

5.7 Septic Tank Structure Vent Filters Inspection

5.7.1 Whenever the odor from the outlets of the septic tank structure vent filters becomes obnoxious, disconnect the filter case from the vent pipe and remove the spent carbon.

5.7.2 Refill the filter case with activated carbon and reinstall the filter case on the vent pipe.

5.8 Dose Counters Inspection

5.8.1 Observe the dose counters mounted on the 4-inch diameter yellow steel posts and record the readings in the Drainfield Data section of the **EVALUATION FORM**. Compute the average daily flow according to the formula given on the form.

5.8.2 If the dose counter display becomes erratic or if the dose counter batteries expire, replace the batteries (two 1.5 volt alkaline "N" cells) according to the vendor's instructions in Appendix D, **DRAINFIELD DOSE COUNTERS, VENT (ODOR) FILTERS, AND EFFLUENT FILTERS.**

5.9 Drainfield Inspection

5.9.1 Visually inspect the drainfield to assure that no saturated areas exist.

5.9.2 Locate the six monitoring ports and remove the cap from each port. Illuminate the interior of the tube (a mirror used to direct sunlight into the tube is very effective), and check the tube for liquid. Record observations on the **EVALUATION FORM**. If standing water exists, remedial action is required. Notify the Manager, Sanitary Systems Maintenance.

5.9.3 Remove the cover from each of the drainfield dose counter float basins. Remove the inner lid and illuminate the float switch and the connecting cord. Note the condition of the float and cord and replace any defective components. Replace the inner lid and the dose counter cover.

5.9.4 Annually exercise the drainfield control valves and record any difficulty in opening or closing each valve. (The control valves are manually operated,

resilient-seat gate valves located at the south end of the drainfield area. The valves are normally operated on a semiannual basis only when the absorption fields are cycled.)

5.9.5 From the rotation frequency listed in the **INSPECTION RECORD FORM** determine the current field cycle. Reset the drainfield control valves to the next succeeding field cycle. For valve positions, see "Table of Valve Positions for Alternation and Repair of Drainfields" located on the **INSPECTION RECORD FORM.**

5.10 Disposition of Inspection Findings

5.10.1 Return the **EVALUATION FORM** and **INSPECTION RECORD FORM** to the Manager, Sanitary Systems Maintenance.

5.10.2 If septic tank pumping is required, those performing sanitary sewer systems maintenance must ensure that the walls of the septic tank are thoroughly washed using a high pressure hose stream to remove all sludge and scum.

6.0 RECORD KEEPING

All record keeping is the responsibility of the Manager, Sanitary Sewer Systems Maintenance.

7.0 REFERENCES

7.1 WHC PROC 1231, Rev 0, Chg A Maintenance Engineering Services, Preventive Maintenance Procedure, Septic Tank Pumping.

7.2 WHC PROC 1233, Rev 0, Chg A Maintenance Engineering Procedure, Septic Tank Inspection.

7.3 On-Site Waste Water Treatment and Disposal Systems, EPA 625/1-80-012.

7.4 Manual of Septic Tank Practice, U. S. Dept. of Health Education & Welfare.

9513334.0308

APPENDIX A - SANITARY SEWER SYSTEM LAYOUT PLAN DRAWING

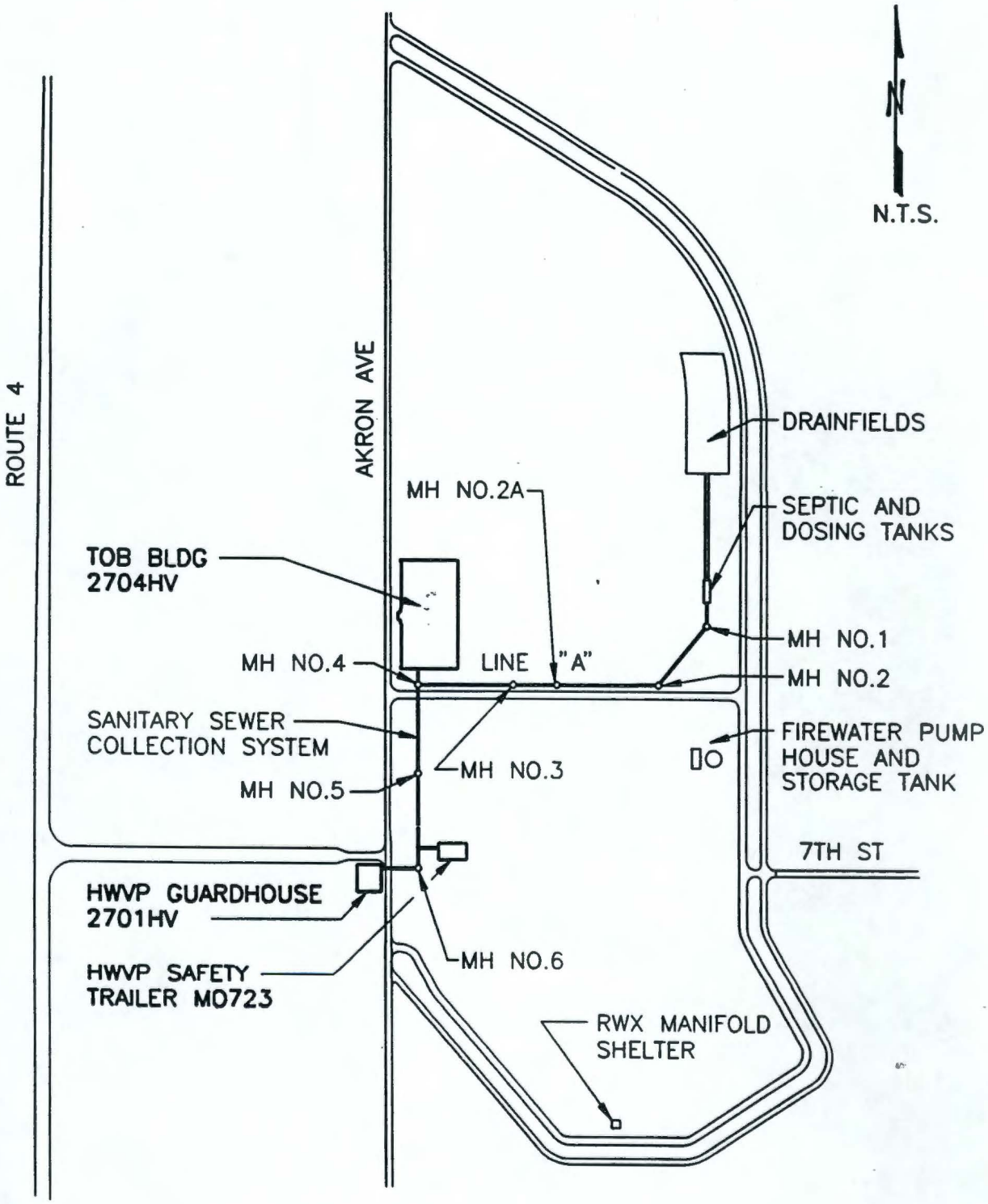

HWVP SANITARY SEWER SYSTEM

FLUOR DANIEL	U.S. DEPARTMENT OF ENERGY HANFORD WASTE VITRIFICATION PLANT	APPENDIX A

STEPLNB.DWG 10/06/94

APPENDIX B - SEPTIC TANK STRUCTURE CROSS-SECTIONAL VIEW

9513334.0511

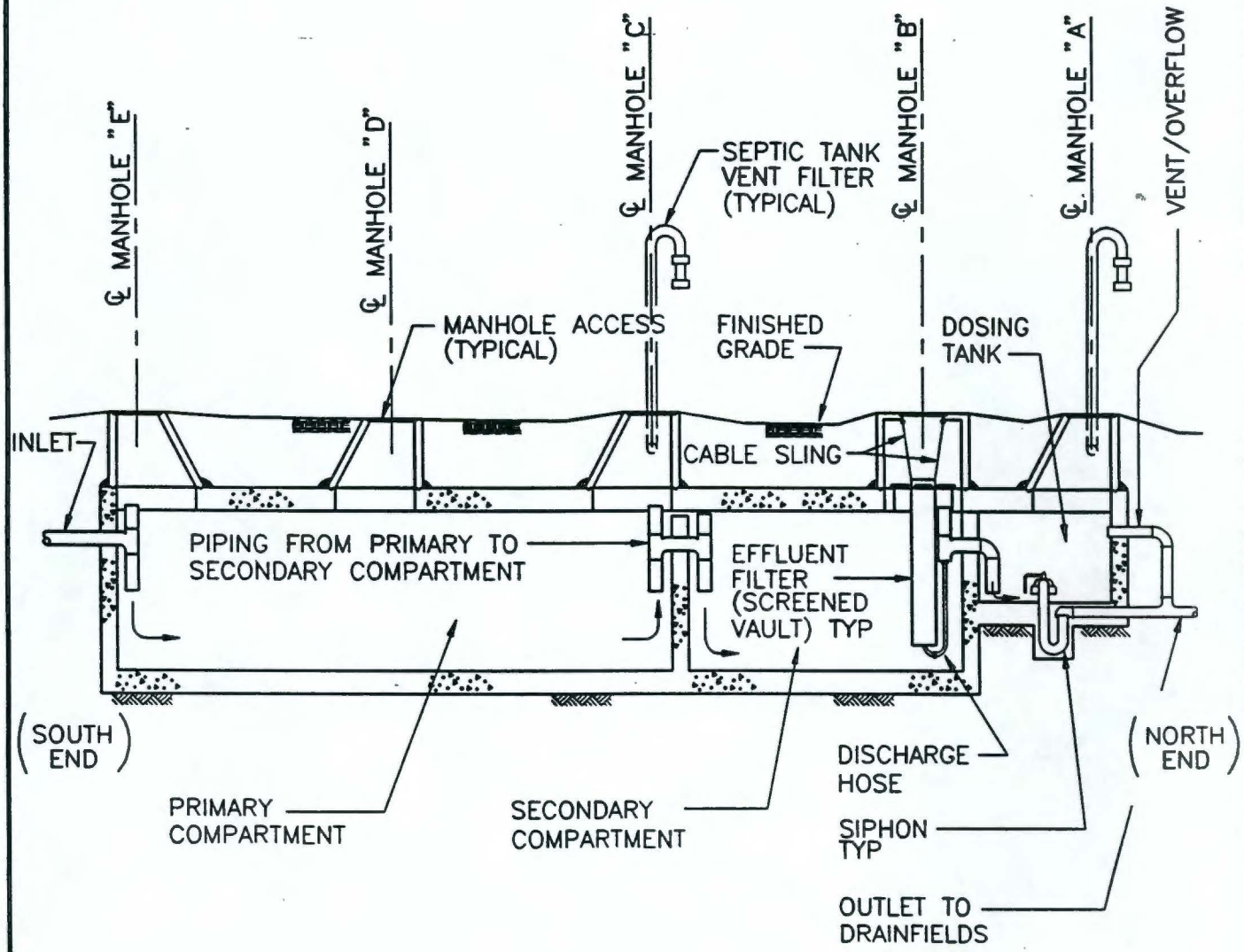

SEPTIC TANK STRUCTURE CROSS SECTION

FLUOR DANIEL	U.S. DEPARTMENT OF ENERGY HANFORD WASTE VITRIFICATION PLANT	APPENDIX B

SEPTIC.DWG 10/06/94

APPENDIX C - EVALUATION FORMS/MEASUREMENT DEVICE DRAWINGS

SEPTIC TANK/DRAINFIELD
INSPECTION RECORD FORM
System Identification No. 6607–11

Item	Frequency	Date	Date	Date
SEWER COLLECTION SYSTEM:				
SEPTIC TANK STRUCTURE:				
Check sludge thickness	Annually			
Check scum layer level	Annually			
Check condition of all inlet and outlet fittings	Annually			
Inspect effluent filters	Monthly			
Clean effluent filters	Annually			
DRAINFIELDS:				
Check for presence of water in monitoring ports	Monthly			
Record dose counter readings	Weekly			
Exercise drainfield valves	Annually			
Rotate drainfields (see table below for valve positions)	Semiannually			

TABLE OF VALVE POSITIONS FOR ALTERNATION AND REPAIR OF DRAINFIELDS

Valve No.	Drainfields "A" and "B"		Drainfields "B" and "C"		Drainfields "A" and "C"		Drainfields "A" and "B"			
	Open	Closed	Open	Closed	Open	Closed	Drainfields "B" and "C"			
1		x	x			x				
2	x			x	x		Drainfields "A" and "C"			
3		x		x	x					
4	x		x			x	Instructions: Place an X in the box above corresponding to the two drainfields placed in operation on the date recorded in the column above.			
5		x	x			x				
6		x	x		x					

Note: The "x" in the Table of Valve Positions For Alternation And Repair Of Drainfields indicates the positions the valves should be placed. For example, to place the "A" and "B" drainfields in service, valves no. 1, 3, 5 and 6 should be closed and valves no. 2 and 4 should be open. Refer to construction drawing H–2–117169, sheet 1.

REMARKS:

SEPTIC TANK/DRAINFIELD EVALUATION FORM

System Identification No. 6607–11

Prepared by:		Date:
Type of report:	Monthly:	Annual:

SEPTIC TANK DATA:

1. Measurement from bottom of primary compartment PVC pipe fitting to manhole rim.		
2. Measurement from bottom of scum layer to manhole rim.		
3. Differential between measurements (subtract item 2 from item 1).		
4. Sludge layer thickness as measured at end of sludge measurement device.		
5. Presence of obnoxious odor at septic tank vent filters (carbon filter outlets).	Yes:	No:
6. Observations (vault integrity, effluent filters, siphons, etc.):		

Notes: If the value entered in item 3 is 3 inches or less, or if the value entered in item 4 is 8 inches or more, notify the Manager, Sanitary Systems Maintenance, to have the septic tank pumped out. If the answer to item 5 is "yes", replace the activated carbon element in the vent filter.

DRAINFIELD DATA:

Drainfield	Previous dose counter reading (A)	Current dose counter reading (B)	D, Difference between dose readings (B – A) (C)	V, Dose Volume (C) X 1,480 gals/dose (D)	N, Calendar days since last reading (E)	*Q, Average Daily Flow, gals/day (D/E)
A						
B						
C						
Total						

Notes: If total average daily flow is greater than the design flow of 11,820 gals/day, notify the Manager, Sanitary Systems Maintenance for further evaluation and an action plan.

7. Drainfield Monitoring Ports Drainfield	*Water present in North Port	South Port	Remarks:
A	Yes ___ No___	Yes ___ No___	
B	Yes ___ No___	Yes ___ No___	
C	Yes ___ No___	Yes ___ No___	
	Yes ___ No___	Yes ___ No___	

*Note: If water is present in monitoring ports, remedial action is required. Notify the Manager, Sanitary Systems Maintenance, for further evaluation and an action plan.

Remarks:

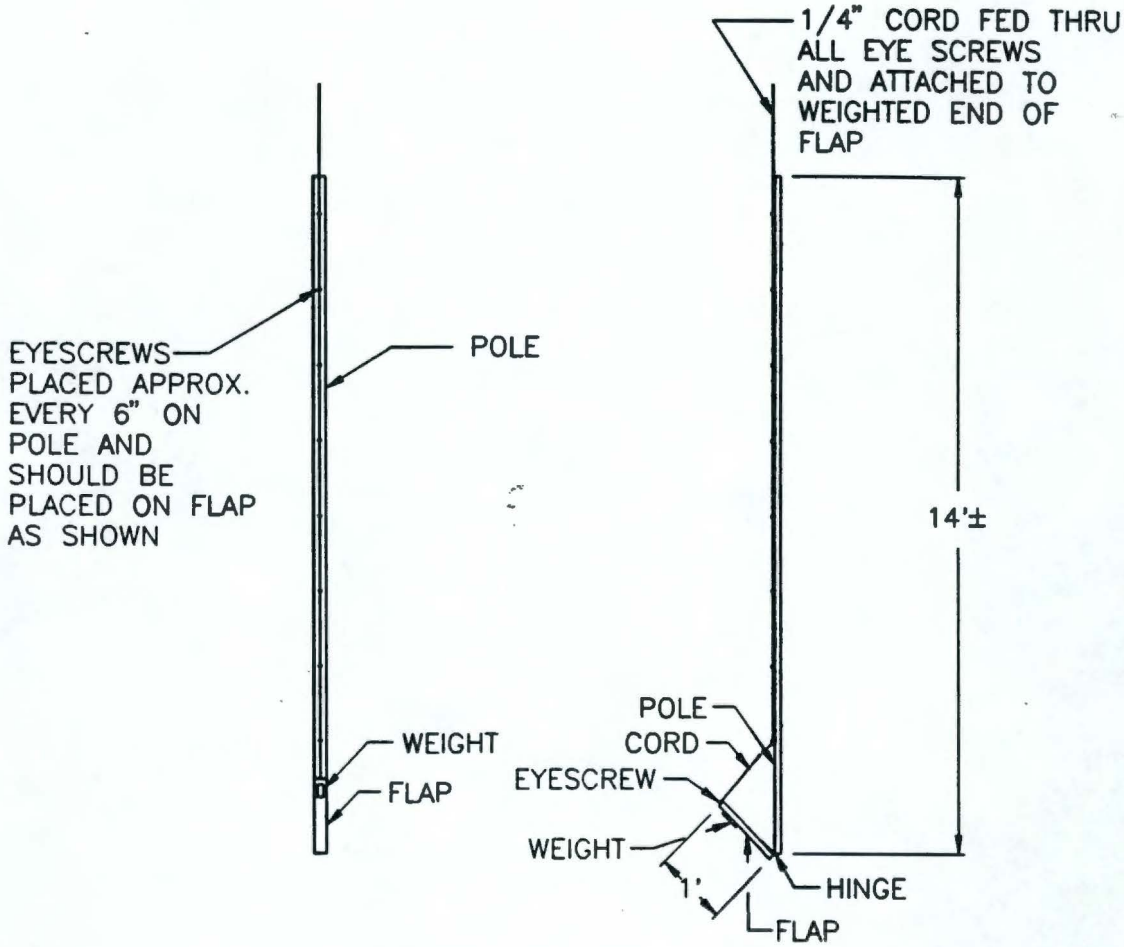

NOTES:

1. POLE AND FLAP TO BE 1"X2" WOOD CONSTRUCTION.
2. MEASURING TAPE SHALL BE ATTACHED TO POST WITH THE ORIGIN AT THE HINGED END.

SCUM MEASUREMENT DEVICE

FLUOR DANIEL	U.S. DEPARTMENT OF ENERGY HANFORD WASTE VITRIFICATION PLANT	APPENDIX C3

SCUM2.DWG 10/06/94

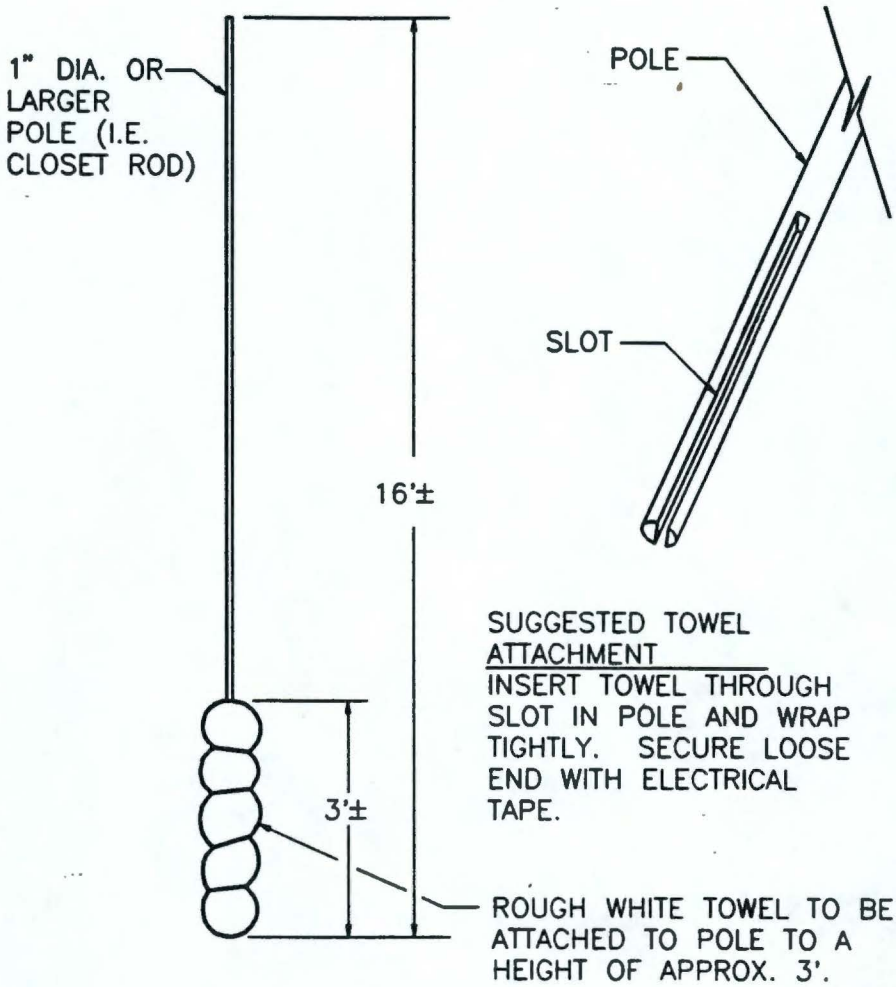

NOTE: REPLACE TOWEL AFTER EACH USE.

SLUDGE MEASUREMENT DEVICE

FLUOR DANIEL	U.S. DEPARTMENT OF ENERGY HANFORD WASTE VITRIFICATION PLANT	APPENDIX C4

SLUDGE.DWG 10/06/94

9513334.0317

APPENDIX D - EQUIPMENT AND MATERIAL CATALOG INFORMATION

TABLE OF CONTENTS

EQUIPMENT AND MATERIAL CATALOG INFORMATION

Title	Page
PRECAST MANHOLES	35
SEWER PIPE & COUPLINGS	56
SEWER PIPE FITTINGS	70
SIPHONS	81
DRAINFIELD CONTROL VALVES	93
DRAINFIELD DOSE COUNTERS, VENT (ODOR) FILTERS, AND EFFLUENT FILTERS	98
EXTERIOR EPOXY PAINT FOR SEPTIC TANK STRUCTURE	107
MEDIUM SAND FILL	118
DRAINFIELD FILTER AGGREGATE	120
GEOTEXTILE FILTER FABRIC	126
CERTIFICATE OF COMPLIANCE	129

9513334.0319

PRECAST MANHOLES

Pipe

PREMIER
ROAD CROSSINGS

Pacific International Pipe Enterprises, Inc.

October 01, 1993

Mr. Brion Hanks
Triad Mechanical
P.O. Box 599
Benton City, Washington 99320

RE: Submittal Clarification

PROJECT: U.S. Department of Energy
Hanford Waste Vitrification Plant
Richland, Washington

SUBJECT: Clarification and Resubmittal of Items For Our September 14, 1993 Package

Dear Mr. Hanks:

Per your fax of 10 pages to me on February 28, 1993, and our subsequent phone conversations, I am responding to the questions raised and have included new information where necessary:

1. Coatings will be applied by you in the field.

2. Per our standard catalogue manhole drawing and the engineer's comments - we will use the sections and cones per this sheet, the precast base slabs are shown on a separate sheet.

3. The manhole sections and cones meet or exceed Specification 02730-2.1.4.2, HS-20-44 vertical loads and specified lateral loads.

4. The cast iron frame and cover meets or exceeds HS-20 loads.

5. Manholes 1 through 7 have been redrawn with corrections we discussed and where noted. (3 Pages)

6. Regarding the <u>Review and Comment</u> sheet:

NOTE 1	Steps are noted as acceptable.
NOTE 2	The 10" thick precast base slab will be used.
NOTE 3	MH40B is noted as equivalent to Alhambra and is noted "OK".
NOTE 4	The frame and cover meets or exceeds HS-20-44 loads is per ASTM A-48 Class 30C grey iron.
NOTE 5	The questions on manhole heights has been corrected in the drawings attached.

P.O. Box 11305, Portland, OR 97211
(503) 285-8391 • (206) 574-3666
Fax (503) 286-0603

P.O. Box 5249, Salem, OR 97304
(503) 585-7350 • 1-800-452-0339
Fax (503) 362-8526

P.O. Box 9156, Tacoma, WA 98409
(206) 475-8888
Fax (206) 474-7631

7. The cleanout cast iron frame and cover meets or exceeds ASTM A-48 Class 30C grey iron.

Again, Brion if you have any questions please don't hesitate to call.

Respectfully,

PACIFIC INTERNATIONAL PIPE ENTERPRISES, INC.

Corky Lambert

Corky Lambert
Manager, Technical Services

CL:csa

Pipe

PREMIER RAIL CROSSINGS

Pacific International Pipe Enterprises, Inc.

September 14, 1993

Mr. Brion Hanks
Triad Mechanical
P.O. Box 599
Benton City, Washington 99320

RE: Manhole Submittals

PROJECT: U.S. Department of Energy
Hanford Waste Vitrification Plant
Richland, Washington

SUBJECT: Precast Manholes

Dear Mr. Hanks:

Thanks for the opportunity to serve you on this project. Enclosed are shop drawings and data for the items listed and descriptive information as needed:

1. 48" Keylock Manhole Catalogue Drawing and Joint Detail — 2 Pgs.
These cones, sections, and grade rings meet or exceed ASTM C-478. They use ASTM A-82 and A-496 wire, A-185 and 497 welded wire fabric. Concrete is a minimum 4,000 psi compressive strength. Mill certification on the American-made wire and test reports on concrete strengths are on file. Copies of applicable certifications will be sent with shipment.

Concrete Mix For the Drycast Sections and Cones Are As Follows:

900 Lbs.	Concrete Sand
1,390 Lbs.	1/2"-1/4" Crushed Rock
1,010 Lbs.	1/4"-1/10" Crushed Rock
30.3 Gallons	Water
625 Lbs.	Type I Cement (Lonestar)
53 Oz.	Water Reducing Agent W.R. Grace #WRDA64
150 Lbs.	Type "F" Flyash

2. 48" Special 6' X 6' Keyed Base Slab — 1 Pg.
Concrete strength on this slab will meet or exceed 4,000 psi. Steel bars are ASTM A-615 Grade 60.

P.O. Box 11305, Portland, OR 97211
(503) 285-8391 • (206) 574-3666
Fax (503) 286-0603

P.O. Box 5249, Salem, OR 97304
(503) 585-7350 • 1-800-452-0339
Fax (503) 362-8526

P.O. Box 9156, Tacoma, WA 98409
(206) 475-8888
Fax (206) 474-7631

Concrete Mix For These Wetcast Base Slabs Are As Follows:

1,300 Lbs.	Concrete Sand
1,700 Lbs.	1/2"-1/4" Crushed Rock
28.7 Gallons	Water
602 Lbs.	Type I Cement (Lonestar)
37 Oz.	Water Reducing Agent W.R. Grace #WRDA64

Cylinders will be taken and mill certification for the American-made bars will be available after production.

3. Manhole Steps and Data — 3 Pgs.
Steps are ASTM A-615 Grade 60. 1/2" Bars with D-4104 Polypropylene Encapsulation.

4. Conseal Joint Sealant and Placement — 3 Pgs.
Meets Federal Specification SS-S-210A and AASHTO M-198B.

5. Manhole Castings-Olympic Model 40B WT and Gasket Detail — 2 Pgs.
ASTM A-48 Class 30 Grey Iron W/Watertight Frame and Cover.

6. Cleanout Casting - 12" Clear Opening — 1 Pg.
ASTM A-48 Class 30 Grey Iron

7. Shop Drawings For Manholes — 3 Pgs.

If you or the owners need any additional information, please don't hesitate to call me at our Portland Plant (503) 285-8391.

Respectfully,

PACIFIC INTERNATIONAL PIPE ENTERPRISES, INC.

Corky Lambert

Corky Lambert
Manager, Technical Services

CL:csa
Enclosures

Pacific International Pipe Enterprises, Inc.

PORTLAND
755 NE Columbia Blvd.
(PO Box 11305)
Portland, OR 97211
(503) 285-8391
(206) 574-3666
(503) 286-0603 FAX

SALEM
5032 Dallas Hwy. NW
(PO Box 5249)
Salem, OR 97304
(503) 585-7350
1-800-452-0339

48" KEYLOCK MANHOLE

PLAN VIEW

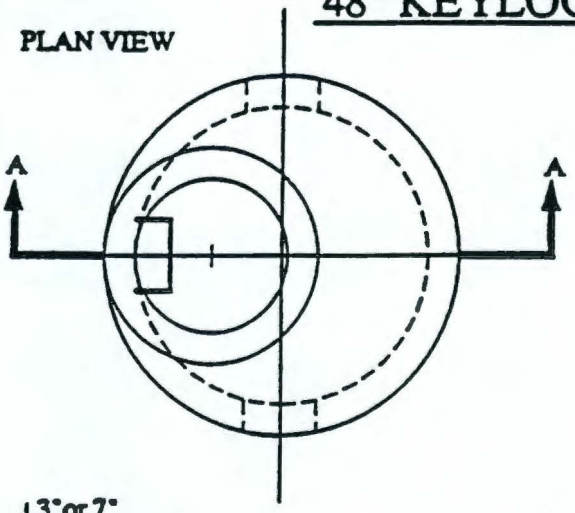

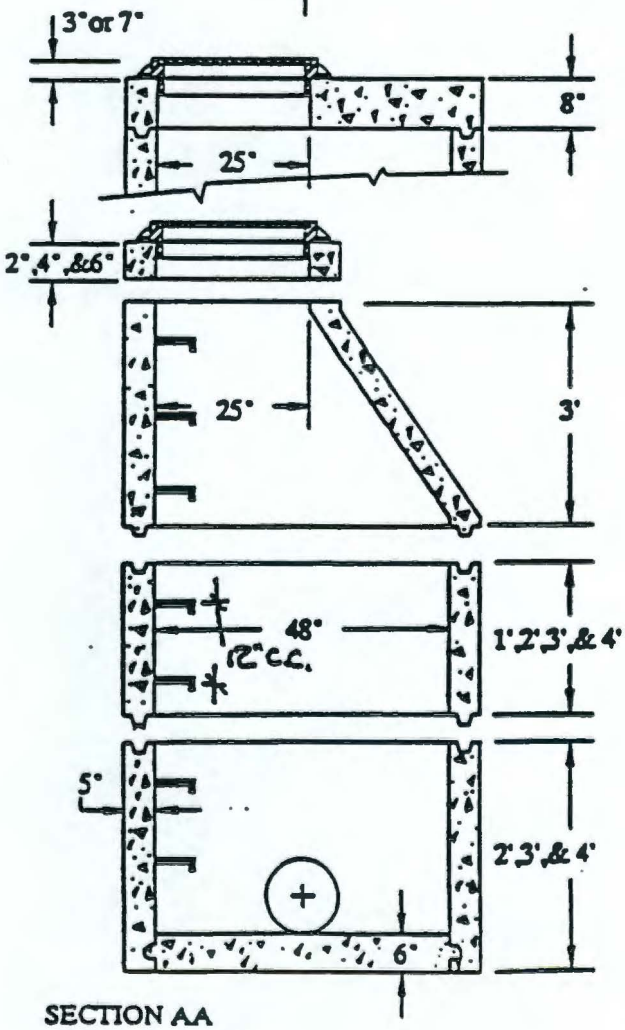

SECTION AA

TOP UNIT

Standard Cast Iron Frame and Covers are available in a 3" Suburban and 7" Standard.

Risers heights are 2",4"& 6".

Cone or Flat Top Optional.

Flat Top Slabs come with openings offset to one side or centered in slab.

PRECAST SECTIONS

Sections are available in heights of 1' through 4'.

Steel Reinforced Polypropylene Steps are installed as required.

BASE SECTIONS

Base Sections are available in 2',3' and 4' heights.

Special knockouts or cutouts are manufactured to order.

All Sections meet or exceed ASTM C 478.

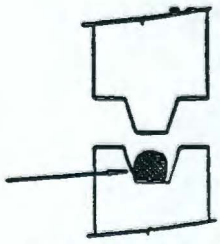

KEYLOCK JOINT

9513334.0325

Pipe INC.

PORTLAND	SALEM	TACOMA
755 N.E. Columbia Blvd. (P.O. Box 11305) Portland, OR. 97211 (503) 285-8391 (503) 286-0603 (FAX) 1-800-426-5556 (206) 574-3666	5032 Dallas Hwy. N.W. (P.O. Box 5249) Salem, OR. 97304 (503)585-7350 1-800-452-0339	4601 S. Orchard (P.O. Box 9156) Tacoma, WA. 98409 (206) 475-8888 (206) 474-7631 (FAX) (206) 623-7772 1-800-922-5338

Pacific International Pipe Enterprises, Inc.

48" KEYLOCK M.H. JOINT

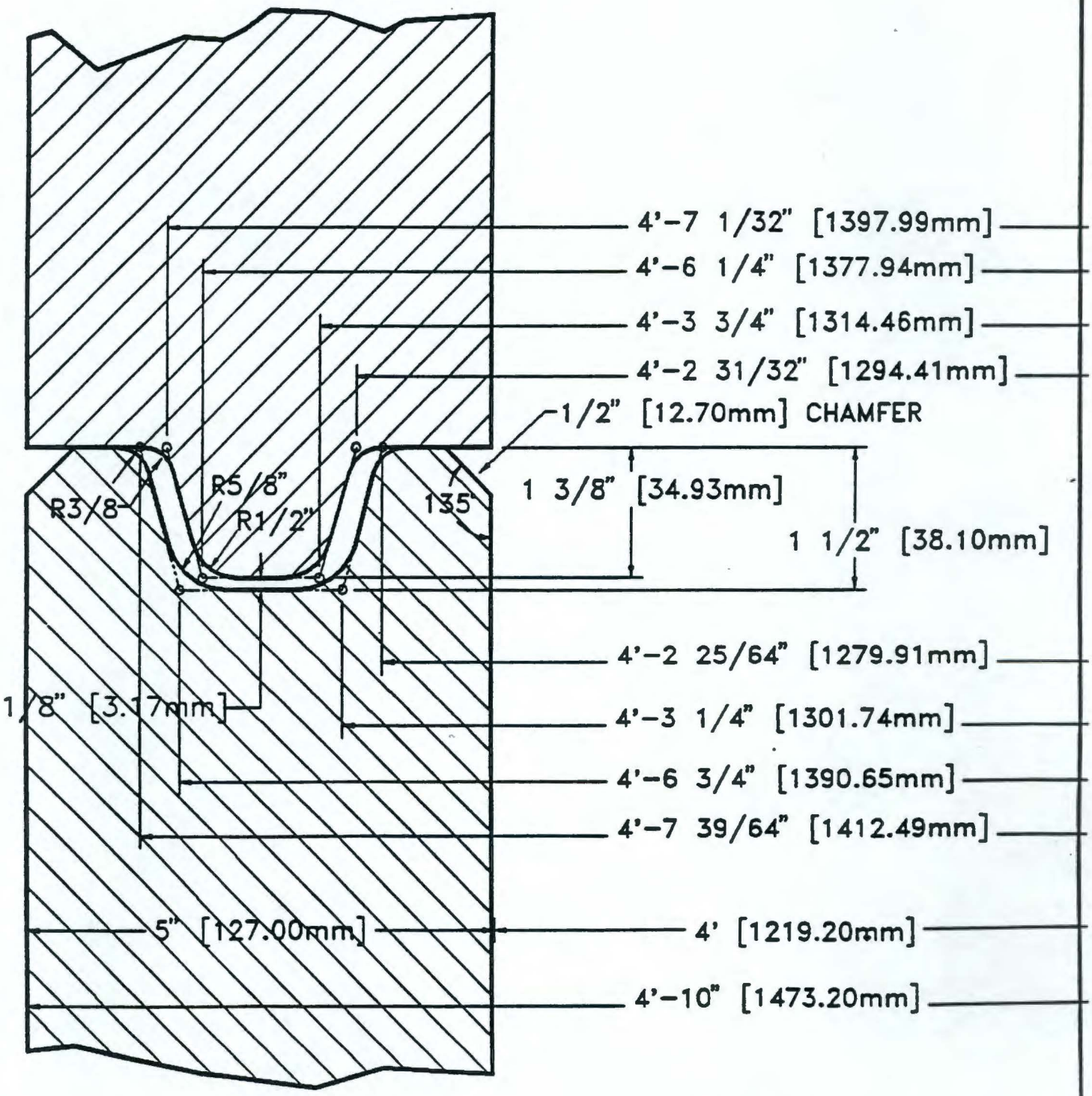

REVISION 5-3-93

9513334.0326

CONTRACTOR TRIAD MECANICAL	DATE 9-9-95	Pipe INC.
JOP HANFORD WASTE VITRIFICATON	DRAWN L.C.T.	
PACIFIC INTERNATIONAL PIPE ENTERPRISES, INC. P.O. BOX 11305 (755 N.E. COLUMBIA BLVD.) PORTLAND OR. 97211 PHONE 503-285-8391		DWG# 9993H1

BASE SLAB DETAIL

PLAN VIEW

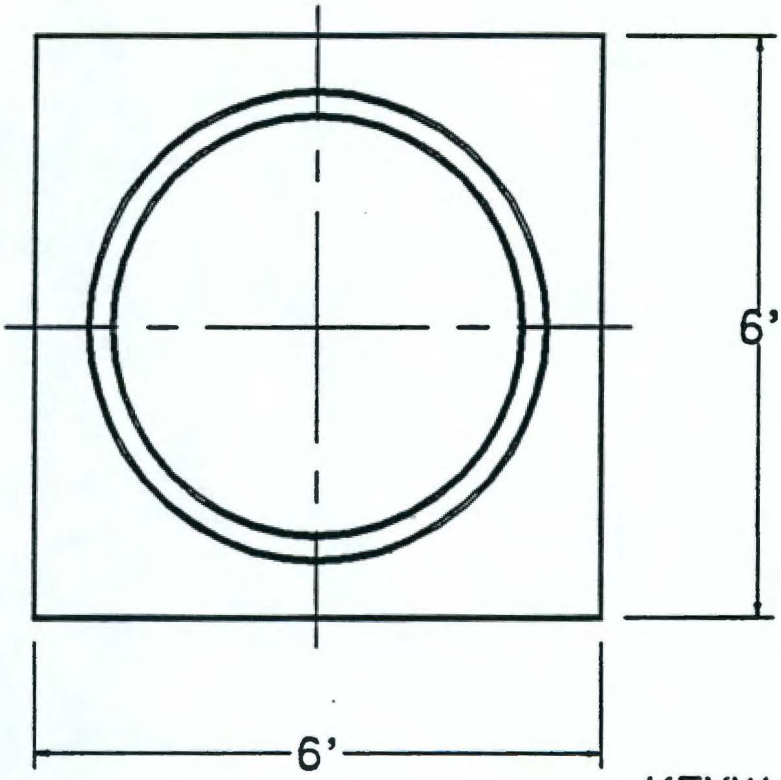

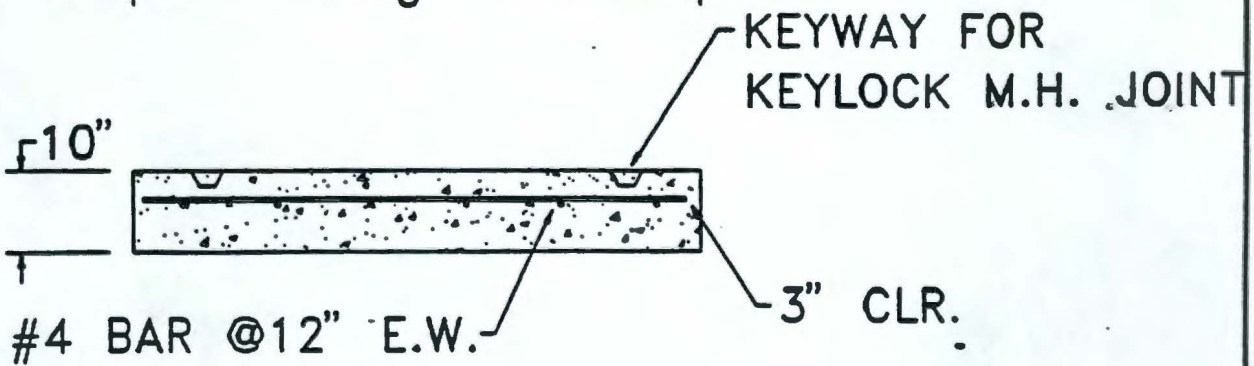

SECTION VIEW

1=24

9513334.0327

LANE POLYPROPYLENE MANHOLE STEPS

2 STEPS AHEAD OF THE COMPETITION...

LANE INTERNATIONAL CORPORATION

PO Box 925 • 18067 S.W. Lower Boones Ferry Road • Tualatin, OR • 97062 • Phone (503) 684-0077
FAX (503) 684-0078

LANE Polypropylene Manhole Steps

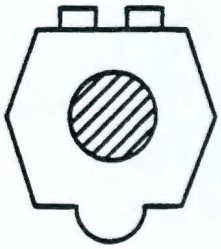

SPECIFICATIONS:

All Lane Poly Steps meet the requirements of ASTM C-478, AASHTO M-199, WISHA and all OSHA specifications. The polypropylene conforms to ASTM D-4104. The 1/2" Grade 60 deformed reinforcing bar meets ASTM-A-615.

LONGEVITY:

Copolymer polypropylene is known for it's high impact strength and superior resistance to the corrosive environments found in sewers.

SAFETY:

Lane poly steps have sure footed self-cleaning tread design.
Poly steps will not spark so there is no danger of igniting sewer gases.

INSTALLATION:

1) The step can be cast in place.
2) Driven into preformed holes with concrete cured to 3,000 PSI miminum.
3) Driven into two parallel 1" diameter holes drilled 13" or 10" on center, 3-1/2" deep.
4) Drill two 1-1/8" or 1-1/4" holes, 3-1/2" deep. Apply epoxy in the hole and around the barbs of the step. Push the step into the holes allowing the epoxy to flow out to the square shoulder of the step.

Any of the above methods will resist a pullout force of over 1,500 lbs.

Associate Member Of

PNCPA

NATIONAL PRECAST CONCRETE ASSOCIATION

CALIFORNIA PRECAST CONCRETE ASSOCIATION

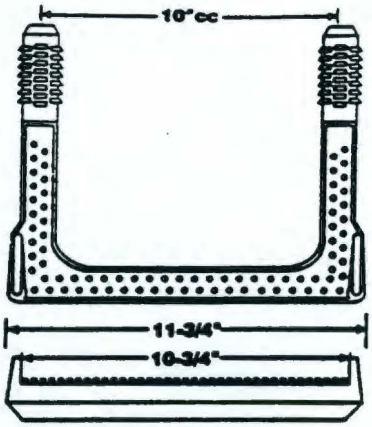
10"cc
11-3/4"
10-3/4"

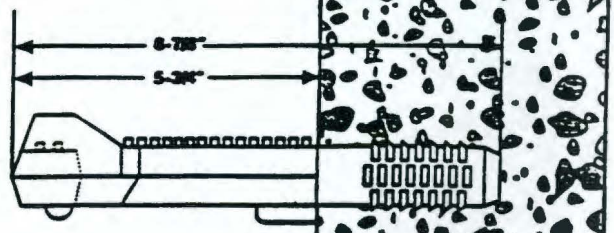
P-10938

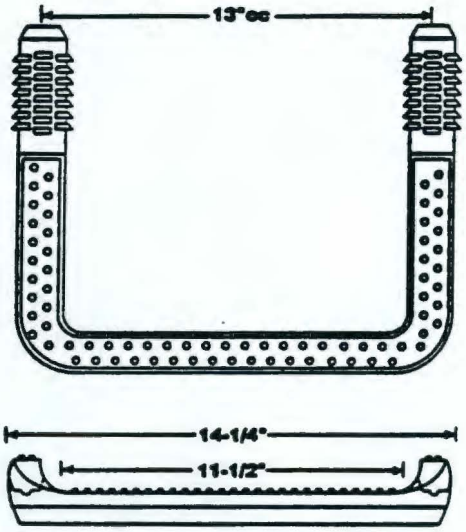
13"cc
14-1/4"
11-1/2"

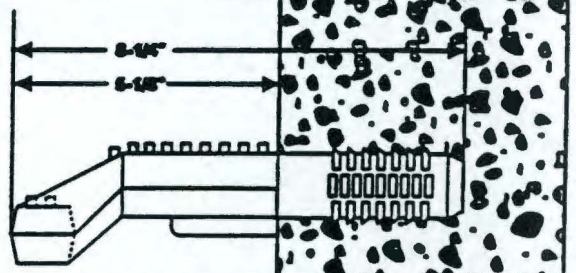
P-13850

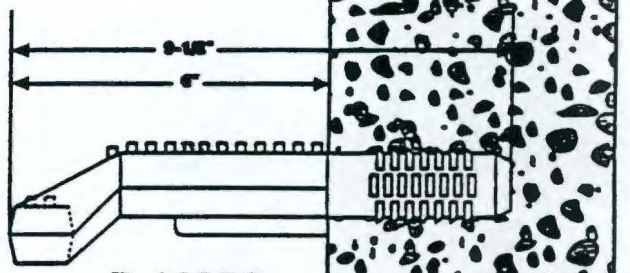
P-13938

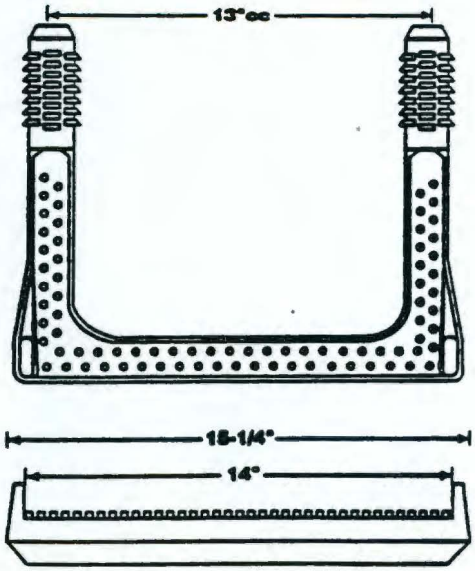
13"cc
15-1/4"
14"

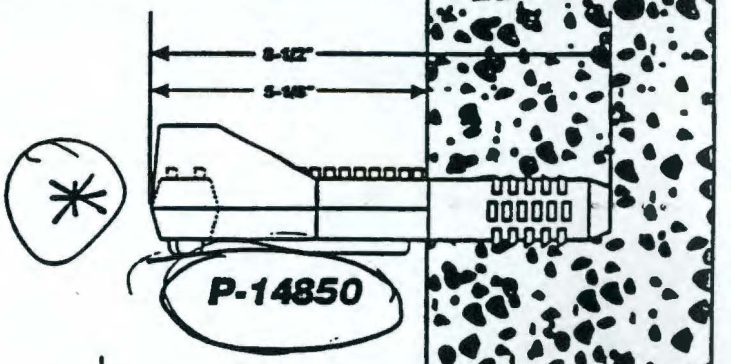
P-14850

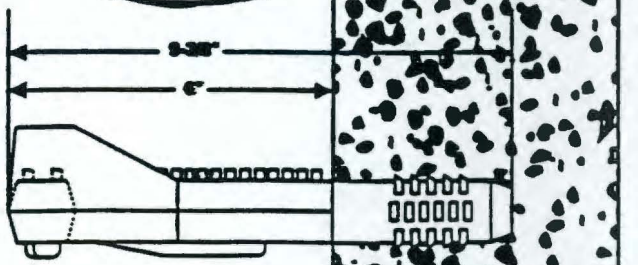
P-14938

CONCRETE SEALANTS INC.

SEAL OF SECURITY

BOND OF TRUST ™

CONSEAL™

SOLVING CONCRETE SEALING PROBLEMS.

CONSEAL

BUTYL SEALANT FOR PRECAST STRUCTURES

CS-102 CS-202

APPLICATIONS

- For self-sealing joints in:
  - Manholes
  - Concrete Vaults
  - Box Culverts
  - Septic Tanks
  - Concrete Pipe
  - Utility Vaults
  - Vertical Panel Structures
  - Burial Vaults

SEALING PROPERTIES

- Provides permanently flexible watertight joints.
- Low to high temperature workability:
  - CS-102 . . . 30°F to 120°F (-1°C to 48°C)
  - CS-202 . . . 0°F to 120°F (-12°C to 48°C)
- Rugged service temperature: -30°F to +200°F (-34°C to +93°C)
- Excellent chemical and mechanical adhesion to clean, dry surfaces.
- Sealed joints will not shrink, harden or oxidize upon aging.
- No priming normally necessary. When confronted with difficult installation conditions, such as wet concrete or temperatures below 40°F (4°C), priming the concrete will improve the bonding action. Consult Concrete Sealants for the proper primer to meet your application.

HYDROSTATIC STRENGTH

- Both ConSeal CS-102 and CS-202 meet the hydrostatic performance requirement as set forth in ASTM C-990 section 10.1. (Performance requirement: 10psi for 10 minutes in straight alignment — in plant, quality control test for joint materials.)

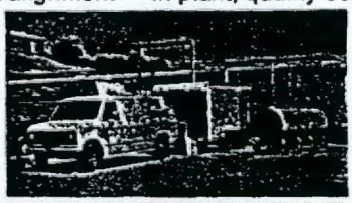

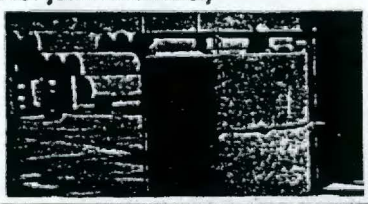

Any Size, Shape, Length, or Material to meet specified requirements.

CONCRETE SEALANTS INC.
8917 S. Palmer Road, P.O. Box 176, New Carlisle, Ohio 45344
(513) 845-8776 • FAX (513) 845-3587 • (800) 332-7325

Technical Data
Flexible Butyl Resin Sealant
CONCRETE SEALANTS
CS-102 & CS-202

SPECIFICATIONS

- ConSeal CS-102 and CS-202 meet or exceed the requirements of Federal Specification SS-S-210 (210-A), AASHTO M-198B, and ASTM C-990-91.

PHYSICAL PROPERTIES

	Spec	Required*	CS-102	CS-202
Hydrocarbon blend content % by weight	ASTM D4 (mod.)	50% min.	51%	52%
Inert mineral filler % by weight	AASHTO T111	30% min.	35%	35%
Volatile Matter % by weight	ASTM D6	2% max.	1.2	1.2
Specific Gravity, 77°F	ASTM D71	1.15-1.50	1.25	1.20
Ductility, 77°F	ASTM D113	5.0 min.	10	12
Penetration, cone, 77°F, 150 gm. 5 sec.	ASTM D217	50-100	55-60	60-65
Penetration, cone, 32°F, 150 gm. 5 sec.	ASTM D217	40 mm	40-45	50-55
Flash point, C.O.C., °F	ASTM D92	350°F min.	450°	425°F
Fire point, C.O.C., °F	ASTM D92	375°F min.	475°	450°F

IMMERSION TESTING

- 30-Day Immersion Testing: No visible deterioration when tested in 5% Caustic Potash, 5% Hydrochloric Acid, 5% Sulphuric Acid, and 5% saturated Hydrogen Sulfide.*
- One Year Immersion Testing: No visible deterioration when tested in 5% Formaldehyde, 5% Formic Acid, 5% Sulfuric Acid, 5% Hydrochloric Acid, 5% Sodium Hydroxide, 5% Hydrogen Sulfide and 5% Potassium Hydroxide.

* Requirements of ASTM C-990 Standard Specification for Joints for Concrete Pipe, Manholes, and Precast Box Sections Using Preformed Flexible Joint Sealants.

INSTALLATION INSTRUCTIONS

1. CLEAN SURFACE

2. APPLY

3. BUTT AT JOINT

LIMITED WARRANTY

This information is presented in good faith, but we cannot anticipate all conditions under which this information and our products, or the products of other manufacturers in combination with our products, may be used. We accept no responsibility for results obtained by the application of this information or the safety and suitability of our products, either alone or in combination with other products. Users are advised to make their own tests to determine the safety and suitability of each such product or product combinations for their own purposes. It is the users' responsibility to satisfy himself as to the suitability and completeness of such information for this own particular use. We sell this product without warranty, and buyers and users assume all responsibility and liability for loss or damage arising from the handling and use of this product, whether used alone or in combination with other products.

Active members of the Adhesive and Sealant Council

The ConSeal Butyl Rubber Sealants, illustrated on pages 46 and 47, were used for the mastic seal for the sewer collection system manhole shaft joints as depicted in the detail of the keylock joint shown on page 40. The following vendor information describes mastic seal placement and usage only.

9513334.0333

Pacific International Pipe Enterprises, Inc.

PORTLAND
755 NE Columbia Blvd.
(PO Box 11305)
Portland, OR 97211
(503) 285-8391
(206) 574-3666
(503) 286-0603 FAX

Pipe INC

SALEM
5032 Dallas Hwy. NW
(PO Box 5249)
Salem, OR 97304
(503) 585-7350
1-800-452-0339

MASTIC SEAL PLACEMENT AND USAGE CHART

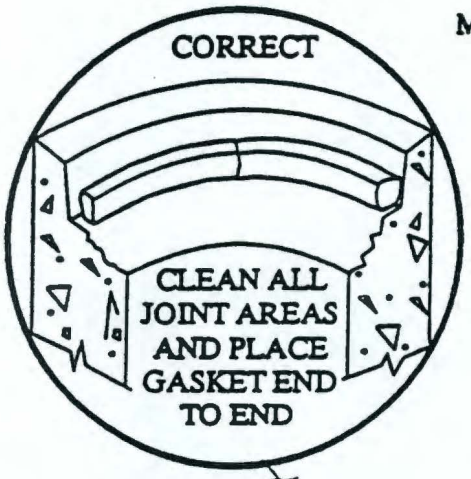

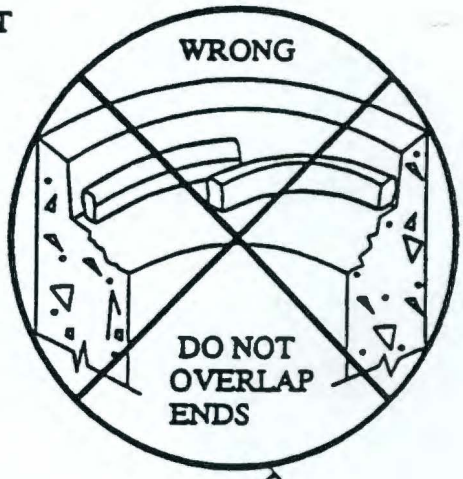

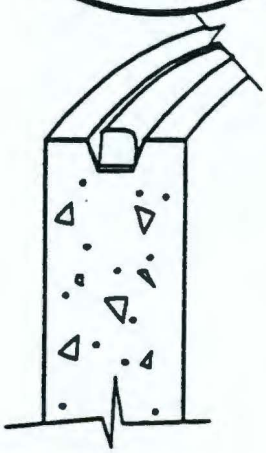

48" KEYLOCK FOR SANITARY AND STORM.

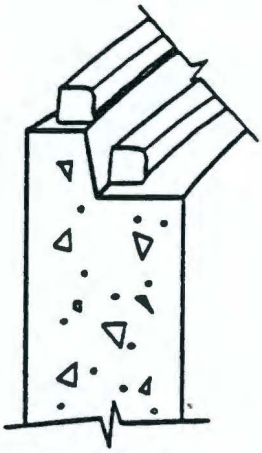

60"-84" T&G FOR SANITARY AND STORM.

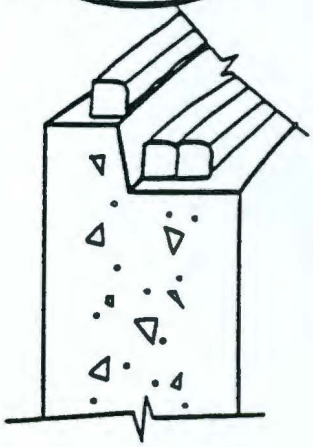

96"-144" T&G FOR SANITARY AND STORM.

MANHOLE SIZE	48"	60"	72"	84"	96"	120"	132"	144"
FOOTAGE PER JOINT	13.9'	35.2'	40.3'	46.7'	79.2'	98.8'	108.3'	118.6'
ROLLS PER JOINT	0.96	2.43	2.78'	3.22	5.47	6.81	7.47	8.18

9513334.0334

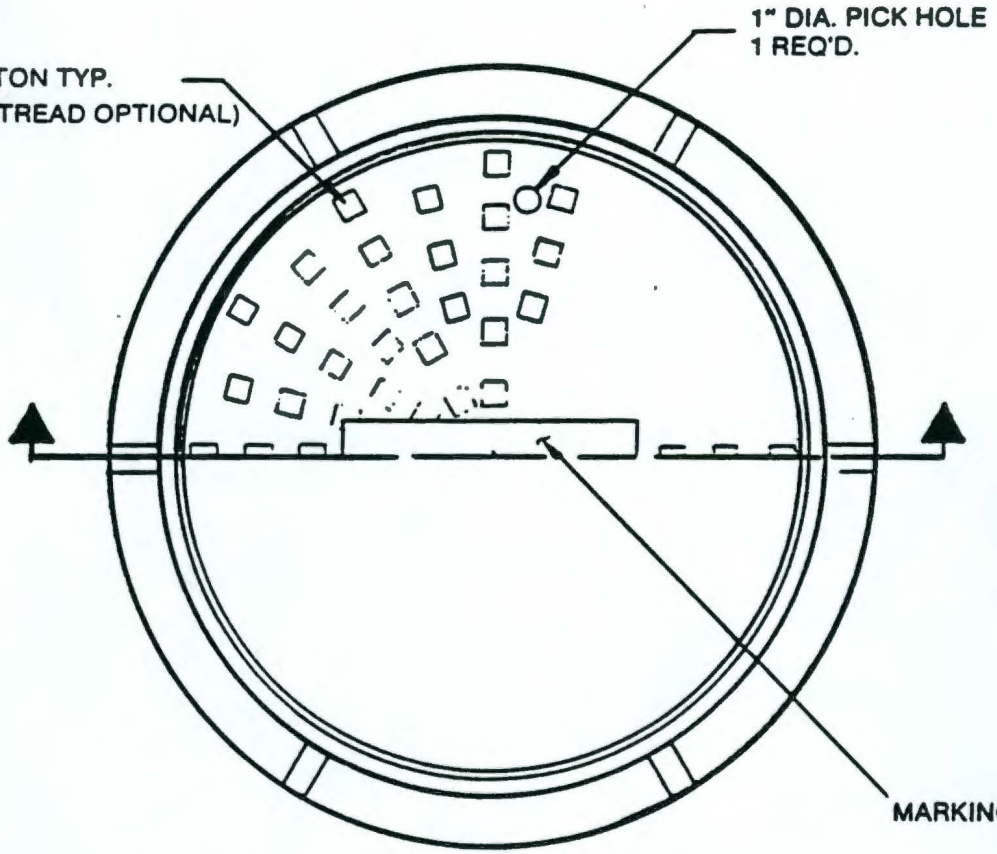

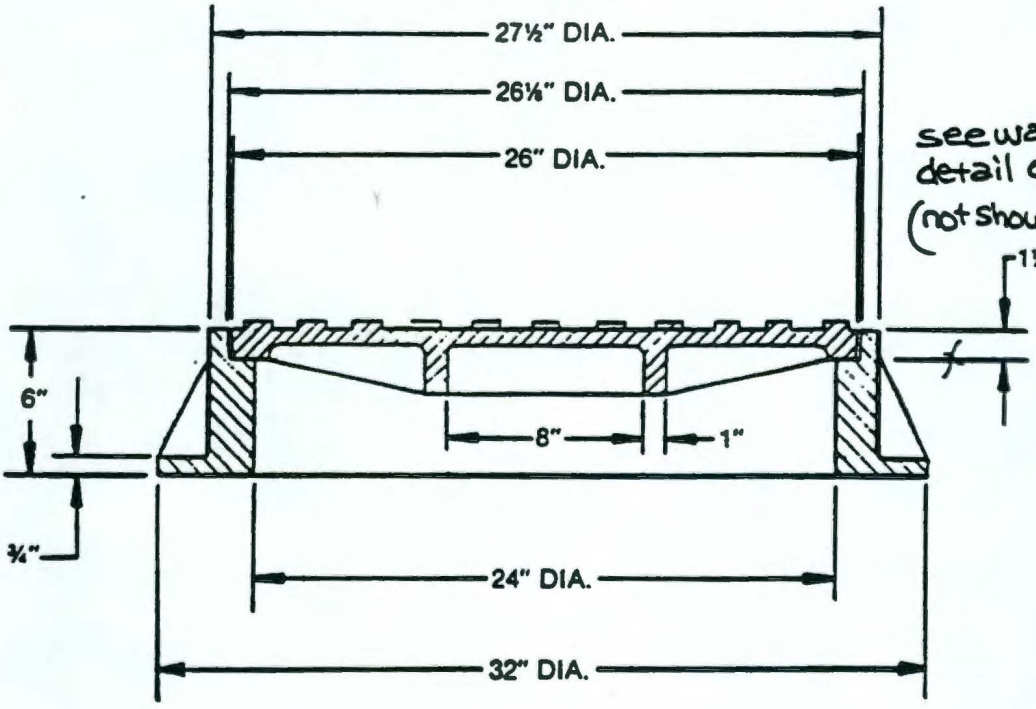

see watertight detail on next page (not shown here)

APPROX. WEIGHT

FRAME - 246 LBS.
COVER - 148 LBS.

MATERIAL - CAST IRON PER ASTM A48 CL30

OLYMPIC FOUNDRY SEATTLE, WASH.	
24" x 6" STANDARD FRAME & COVER	
RATING — H-20	PART NO. MH40B

HS-20 required

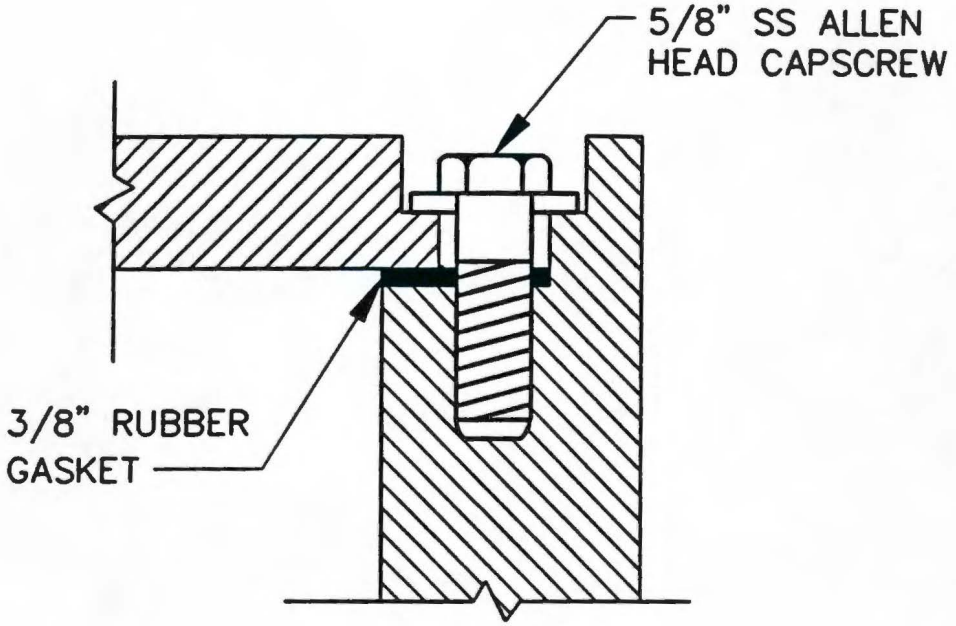

DETAIL OF WATERTIGHT SEAL ON MH40-B

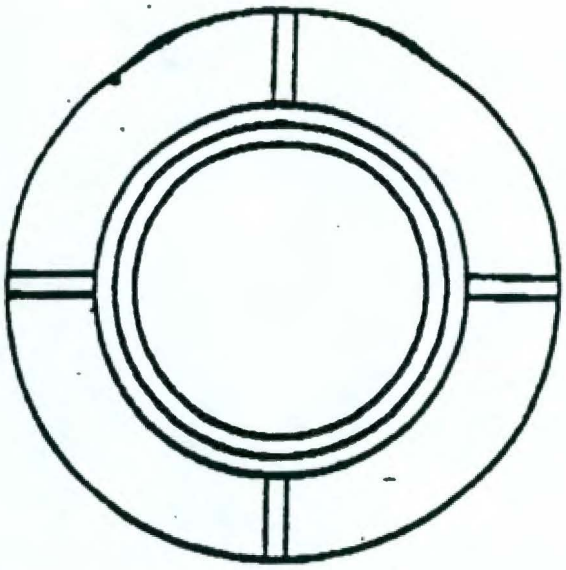

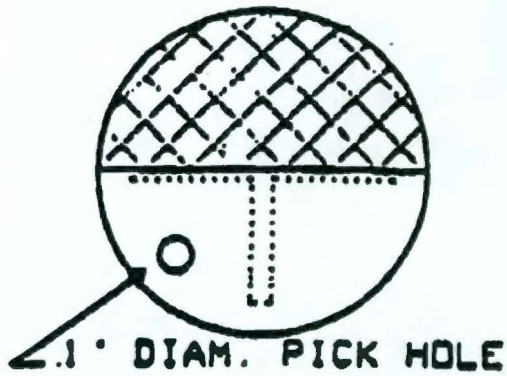

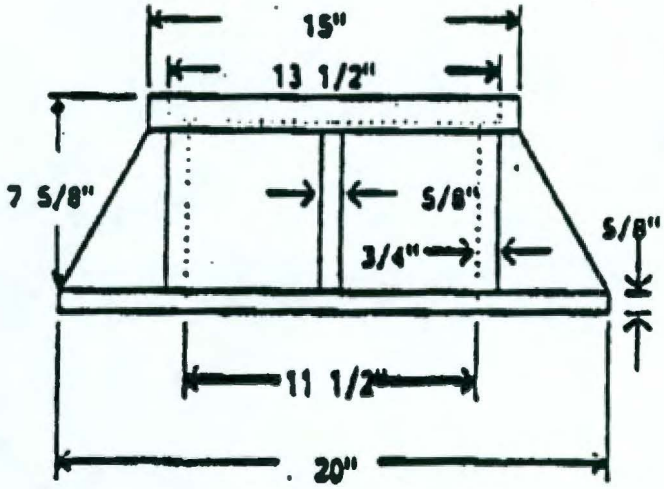

RING

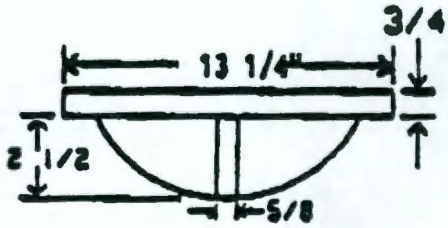

COVER

APPROX. WEIGHT
RING - 119 LBS
COVER - 36 LBS

MAT'L - CAST IRON
PER ASTM A-48 CL. 30

OLYMPIC FOUNDRY INC SEATTLE AND SPOKANE, WASHINGTON	
CAST IRON RING & COVER 12" x 7 5/8" CLEAN OUT	
RATING: H-20	PART NUMBER: M1035

9513334.0337

SPECIFYING AGENCY: U.S. DEPT. OF ENERGY
CONTRACTOR: TRIAD MECANICAL
PROJECT: HANFORD WASTE VITRIFICATION PLANT
JOB LOCATION: HANFORD
DATE TO START:
DRAWN BY: LON SALES PERSON CORK
MANHOLE SIZE: 48"
CUTTING ORDER:

PLASTIC STEPS

KEYLOCK JOINT
CON. SEAL YES
MH40B CASTING
SANITARY SEWER

S.O. #
DWG # 9993H2

PIPE INC.

REVISION 9-29-93

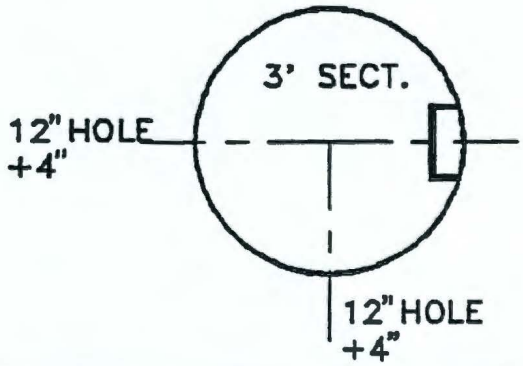

MANHOLE NO: 1
DEPTH: 9.37'

SHIPPING MATERIAL

2-3' SECT
1-3' CONE
1-FRAME & GRATE
1-SPECIAL BASE SLAB

REVISION 9-29-93

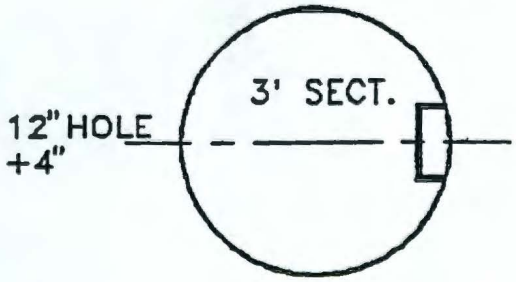

MANHOLE NO: 2A
DEPTH: 8.83'

SHIPPING MATERIAL

1-3' SECT
1-2' SECT
1-3' CONE
1-FRAME & GRATE
1-4" GRADE RING
1-2" GRADE RING
1-SPECIAL BASE SLAB

REVISION 9-29-93

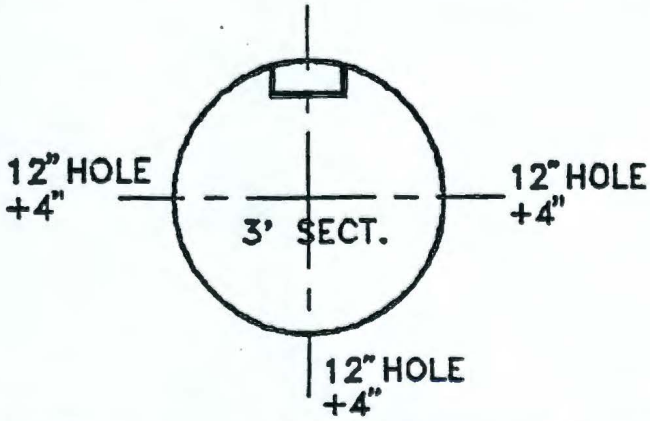

MANHOLE NO: 3
DEPTH: 8.44'

SHIPPING MATERIAL

1-3' SECT
1-2' SECT
1-3' CONE
1-FRAME & GRATE
1-SPECIAL BASE SLAB

9513334.0338

SPECIFYING AGENCY: U.S. DEPT. OF ENERGY
CONTRACTOR: TRIAD MECANICAL
PROJECT: HANFORD WASTE VITRIFICATION PLANT
JOB LOCATION: HANFORD
DATE TO START:
DRAWN BY: LON SALES PERSON CORK
MANHOLE SIZE: 48"
CUTTING ORDER:

PLASTIC STEPS

KEYLOCK JOINT
CON. SEAL YES
MH40B CASTING
SANITARY SEWER

S.O. #

DWG # 9993H3

PIPE INC.

REVISION 9-29-93

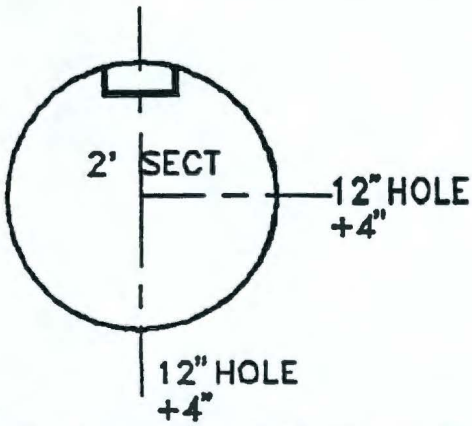

MANHOLE NO: 4
DEPTH: 5.98'

SHIPPING MATERIAL

1-2' SECT
1-3' CONE
1-FRAME & COVER
1-6" GRADE RING
1-SPECIAL BASE SLAB

REVISION 9-29-93

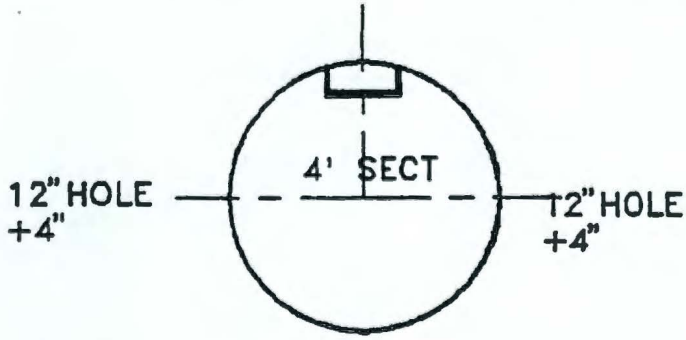

MANHOLE NO: 5
DEPTH: 7.39'

SHIPPING MATERIAL

1-4' SECT
1-3' CONE
1-FRAME & COVER
1-SPECIAL BASE SLAB

REVISION 9-29-93

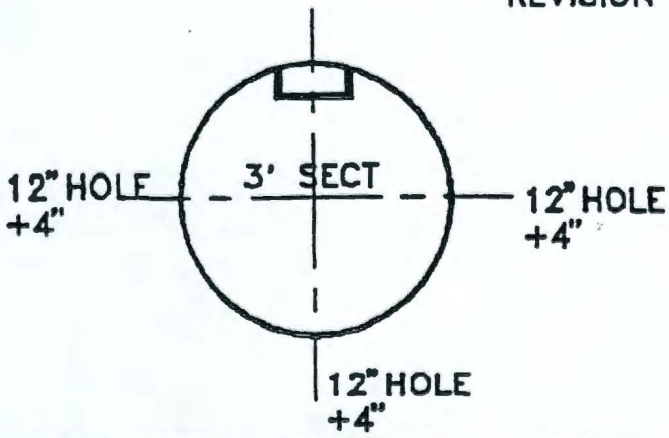

MANHOLE NO: 6
DEPTH: 6.78'

SHIPPING MATERIAL

1-3' SECT
1-3' CONE
1-FRAME & COVER
1-4" GRADE RING
1-SPECIAL BASE SLAB

9513334.0339

SPECIFYING AGENCY: U.S. DEPT. OF ENERGY
CONTRACTOR: TRIAD MECANICAL
PROJECT: HANFORD WASTE VITRIFICATION PLANT
JOB LOCATION: HANFORD
DATE TO START:
DRAWN BY: LON SALES PERSON CORK
MANHOLE SIZE: 48"
CUTTING ORDER:

PLASTIC STEPS

KEYLOCK JOINT
CON. SEAL YES
MH40B CASTING
SANITARY SEWER

S.O. #
DWG # 9993H4

PIPE INC.

REVISION 9-29-93

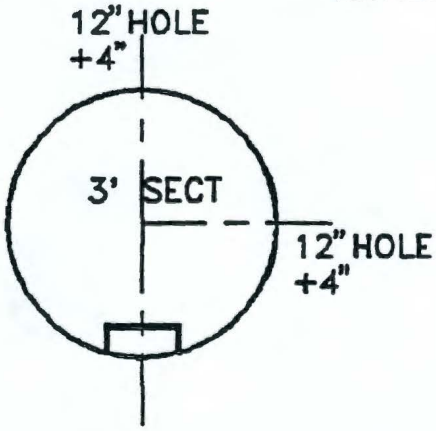

MANHOLE NO: 7
DEPTH: 6.47'

SHIPPING MATERIAL

1-3' SECT
1-3' CONE
1- F&C
1-2" GRADE RING
1-SPECIAL BASE SLAB

MANHOLE NO:
DEPTH:

SHIPPING MATERIAL

MANHOLE NO:
DEPTH:

SHIPPING MATERIAL

9513334.0340

SEWER PIPE & COUPLINGS

9513334.0341

J-M PIPE

Ring-Tite® PVC Gravity Sewer Pipe and Fittings

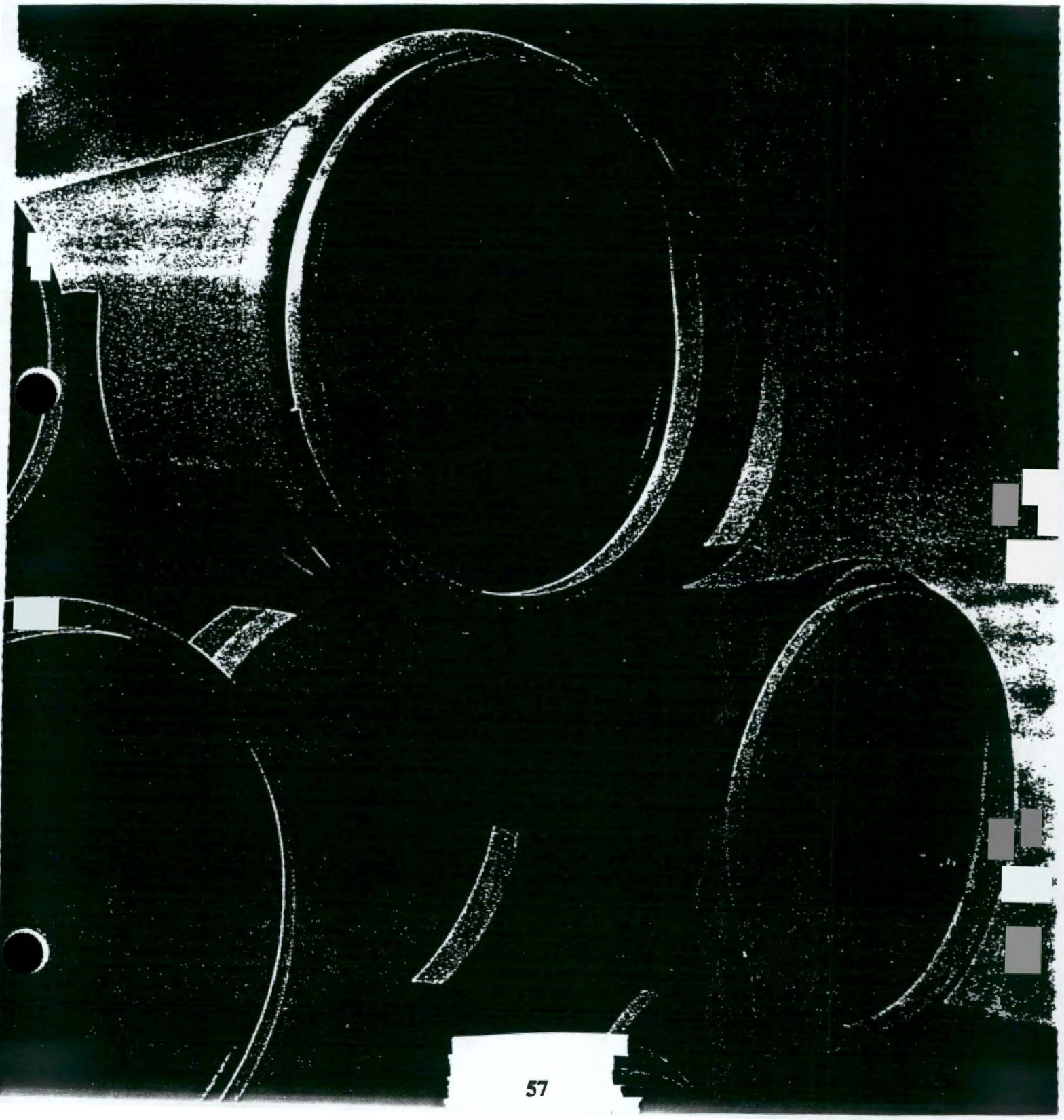

9513334.0342

Ring-Tite PVC
ᐧravity Sewer Pipe
ıd Fittings

Ring-Tite joint meets exacting tightness requirements, simplifies assembly

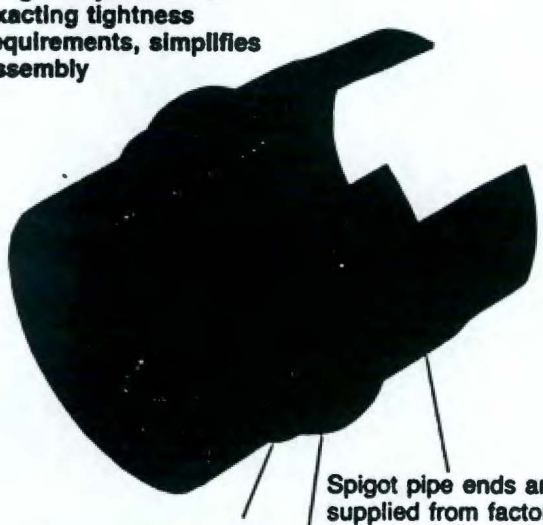

Spigot pipe ends are supplied from factory with bevels.

"Locked-in" rubber sealing ring provides tight, flexible seal. Meets requirements of ASTM D-3212—"Joints for Drain and Sewer Pipes using Flexible Elastomeric Seals."

The bell is an integral part of the pipe section with the same strength.

Figure 1

Meets ASTM D3034-SDR 35 4"-15" and ASTM F679 18"-27"

Introduction

The growing demand for an effective all-out attack on water pollution highlights the need for improved sanitary sewage collection systems. A modern system needs pipe with improved design for reserve strength and stiffness to increase load-bearing capacity - all within the framework of maximizing sewer system capacity at reasonable cost. Ring-Tite PVC sewer pipe is designed to meet this need.

Applications

J-M PVC sewer pipe is suitable for conveying domestic sanitary sewage as well as certain industrial wastes. For further information regarding the suitability of PVC for conveying various chemicals, contact your J-M pipe representative.

Advantages

1. Chemical Resistant:
J-M Ring-Tite PVC sewer pipe is unaffected by the fluids found in ordinary domestic sewage. It is immune to sewer gases and the sulfuric acid generated by the completion of the hydrogen sulfide cycle. It is immune to corrosive soils—both alkaline or acidic.

2. Abrasion Resistant:
J-M Ring-Tite PVC sewer pipe has excellent resistance to abrasion, gouging and scoring—superior to that of most common piping materials.

3. Flow Characteristics:
J-M Ring-Tite PVC sewer pipe with long lengths, smooth interior, and factory-made close tolerance joints provides a Manning "n" coefficient of .009. High-carrying capacity makes possible the use of flatter grades or smaller diameter pipe. Ask your J-M sales representative for a flow nomograph and the report "Hydraulic Characteristics of PVC Sewer Pipe in Sanitary Sewers," a joint study by Johns-Manville and Utah State University.

Through research and technology we proudly offer "locked-in" rubber ring PVC sewer pipe. This factory-made joint eliminates the need to insert rings in the field. Joint design and close manufacturing tolerances allow this joint to pass a 25 psi hydrostatic test in the laboratory and provides the basis for exacting infiltration/exfiltration specifications. Be secure in the future by designing with J-M Ring-Tite PVC sewer pipe with low infiltration—specify infiltration not to exceed 50 gallons/inch diameter/mile/day.

Call for ASTM D-3034 SDR35 with 20% More Wall Thickness in 8, 10, 12 and 15-inch sizes—Provides Greater External Load-Carrying Capacity.

This allows for the design and construction of PVC gravity sewer systems (4"-15") consistent with best engineering practices. A uniform minimum "pipe stiffness," ($F/\Delta y = 46$ psi) means no weak links. It also means that J-M PVC sewer pipe in 8, 10, 12 & 15" diameters has 60 to 75 percent greater pipe stiffness than SDR 42 and SDR 41 PVC sewer pipe. This increased "pipe stiffness" provides the extra needed at that critical time when the pipe is first being installed in the trench and undergoing bedding and backfill.

9513334.0343

External Loads

Background

Loads imposed on buried conduits have, in past practice, been calculated by using the Marston load formula. For trench loads Marston has a formula for rigid pipe and another formula for flexible pipe. It is important to recognize that under identical conditions of bury the soil load generated on a flexible conduit is less than the load generated on a rigid conduit. The comparitive load on a rigid conduit verses the load on a flexible conduit is expressed as a ratio of trench width to the flexible pipe O.D.

By definition, a flexible conduit is one which will deflect before reaching failure.

Marston's Formulas For Soil Loads

Rigid Pipe $W = C_d w B_d^2$

Flexible Pipe $W = C_d w B_c B_d$

Where:

W = Load on pipe (lb./lin. ft.)

C_d = Load Coefficient

w = Soil unit weight (lb./Ft³)

B_d = Ditch width (ft.)

B_c = O.D. of pipe (ft.)

Prism Load

Loads imposed on buried conduits have been calculated by using the Marston load formulas for rigid and flexible pipe. However, it has been determined that the Marston formula for flexible pipe may not determine the maximum long term load—the "Prism Load" formula is more accurate. The "Prism Load" is the weight of the column of soil directly above the pipe. Thus, precautions in keeping the trench narrow are unnecessary for a flexible pipe installation. The important thing is to compact the haunching material from the pipe out to the undisturbed trench walls. Therefore, J-M suggests that the maximum long term load be determined by the prism load for design.

Prism Load: $P_v = wH$ (lbs/ft²)

Where:

P_v = Pressure at the top of the pipe due to the weight of the soil (lb/ft²)

w = Soil unit weight—(lb/ft³)

H = Depth from top of pipe to top of ground (ft.)

Note: To convert prism load (lb./ft²) to lb./linear ft., multiply by the O.D. of the pipe in feet, or:

$W = wHB_c$

Live Loads

Live loads imposed on buried conduits from traffic must also be considered in a design and become more important at shallow depths. The combination of soil load and live load must be added together to design for the maximum load as shown in curves above.

The soil load and live load must be added to determine the total external load on a buried conduit. This combined load should be used for design. Figure 2 illustrates the magnitude of soil and live loads separately and also charts the magnitude of the combined or total loads. The curves in figure 2 apply only for H20 highway loading and a soil weight of 120 lbs./cu. ft.

At shallow depths of cover —3 feet and less, flexible conduits can deflect and rebound under dynamic loading conditions if the trench width is not sufficiently bridged. Unless special precautions are taken to bridge the trench in shallow installations, the breaking up of flexible road surfaces may result. Therefore, for shallow installations under flexible road surfaces (less than 3 feet), J-M recommends Class 1* material be used in the pipe zone and up to the road elevation. This recommendation is not meant to conflict with the design engineer's specifications and his specifications will govern.

*see page 8 for definitions of Class 1.

H20 Highway Load

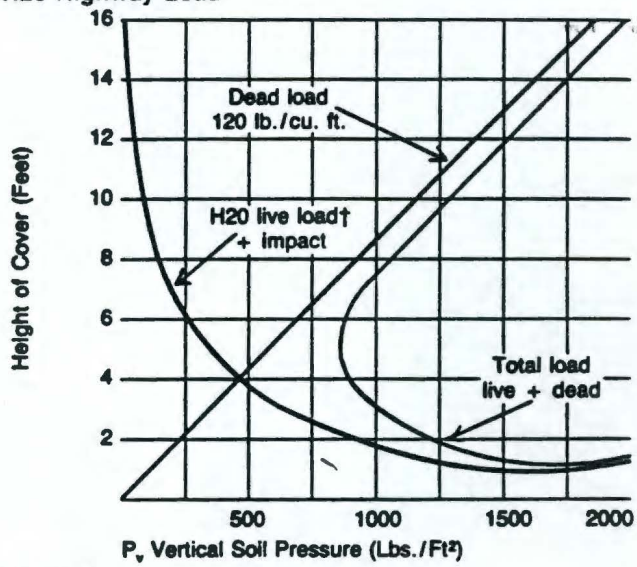

Figure 2

Note: To convert vertical soil pressure to load on pipe—pounds per lineal foot—multiply by O.D. of pipe in ft.

†Live load applied on assumed area of 36" x 40".

Prism Loads on Flexible PVC Cover Pipe (lb/lin. ft.)

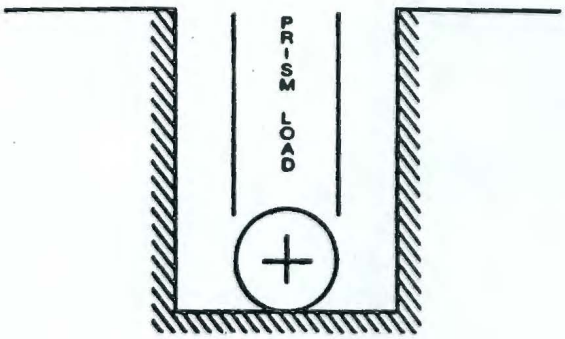

Height of Cover Feet	Soil Wt. lb/ft³	Pipe Diameter (Inches) 4	6	8	10	12	15	18	21	24	27
3	100	105	157	210	263	313	383	468	551	620	699
	110	116	173	231	289	343	421	514	606	681	769
	120	126	188	252	315	375	459	561	661	744	838
	130	137	204	273	341	406	497	607	716	806	908
4	100	141	209	280	350	417	510	623	734	827	932
	110	155	230	308	385	458	561	685	808	909	1,025
	120	169	251	336	420	500	612	748	882	992	1,118
	130	183	272	364	455	542	663	810	955	1,075	1,211
5	100	176	262	350	438	521	638	779	918	1,033	1,165
	110	193	288	385	481	573	701	857	1,010	1,137	1,281
	120	211	314	420	525	625	765	935	1,102	1,240	1,397
	130	228	340	455	569	677	829	1,013	1,194	1,343	1,514
6	100	211	314	420	525	625	765	935	1,102	1,240	1,397
	110	232	345	462	578	688	842	1,028	1,213	1,364	1,537
	120	253	377	504	630	750	918	1,122	1,323	1,488	1,677
	130	274	408	546	683	813	995	1,215	1,433	1,612	1,817
7	100	246	366	490	613	729	893	1,091	1,286	1,447	1,630
	110	271	403	539	674	802	982	1,120	1,414	1,591	1,793
	120	295	439	588	735	875	1,071	1,309	1,543	1,736	1,956
	130	319	476	637	796	948	1,160	1,418	1,672	1,881	2,119
8	100	281	418	560	700	834	1,020	1,247	1,470	1,653	1,863
	110	309	460	616	770	917	1,122	1,371	1,617	1,819	2,050
	120	337	502	672	840	1,000	1,224	1,496	1,763	1,984	2,236
	130	365	544	728	910	1,084	1,326	1,620	1,911	2,149	2,422
9	100	316	471	630	788	938	1,148	1,402	1,653	1,860	2,096
	110	348	518	693	866	1,032	1,262	1,543	1,819	2,046	2,306
	120	379	565	756	945	1,125	1,377	1,683	1,984	2,232	2,515
	130	411	612	819	1,024	1,219	1,492	1,823	2,150	2,418	2,725
10	100	351	523	700	875	1,042	1,275	1,558	1,837	2,066	2,329
	110	387	575	770	963	1,146	1,403	1,714	2,021	2,273	2,562
	120	421	628	840	1,050	1,250	1,530	1,870	2,205	2,480	2,795
	130	456	680	910	1,138	1,355	1,658	2,025	2,388	2,687	3,028
11	100	386	575	770	963	1,146	1,403	1,714	2,021	2,273	2,562
	110	425	633	847	1,059	1,261	1,543	1,886	2,223	2,501	2,818
	120	463	690	924	1,155	1,375	1,683	2,057	2,425	2,728	3,074
	130	502	748	1,001	1,251	1,490	1,823	2,229	2,627	2,955	3,331
12	100	421	628	840	1,050	1,251	1,530	1,870	2,205	2,480	2,795
	110	464	690	924	1,155	1,375	1,683	2,057	2,425	2,728	3,074
	120	505	753	1,008	1,260	1,500	1,836	2,244	2,646	2,976	3,354
	130	548	816	1,092	1,365	1,626	1,989	2,431	2,866	3,224	3,633
13	100	456	680	910	1,138	1,355	1,658	2,026	2,388	2,687	3,028
	110	503	748	1,001	1,251	1,490	1,823	2,229	2,627	2,955	3,331
	120	548	816	1,092	1,365	1,626	1,989	2,431	2,866	3,224	3,633
	130	593	884	1,183	1,479	1,761	2,155	2,634	3,105	3,493	3,936
14	100	491	732	980	1,225	1,459	1,785	2,182	2,572	2,893	3,261
	110	541	805	1,078	1,348	1,605	1,964	2,400	2,829	3,183	3,587
	120	590	879	1,176	1,470	1,751	2,142	2,618	3,086	3,472	3,913
	130	639	952	1,274	1,593	1,896	2,321	2,836	3,344	3,761	4,239

Prism Loads on Flexible PVC Sewer Pipe lb./lin. ft.) cont.

Height of Cover Feet	Soil Wt. lb/ft³	Pipe Diameter (Inches) 4	6	8	10	12	15	18	21	24	27
15	100	527	785	1,050	1,313	1,563	1,913	2,338	2,756	3,100	3,494
	110	580	863	1,155	1,444	1,719	2,104	2,571	3,031	3,410	3,843
	120	632	941	1,260	1,575	1,876	2,295	2,805	3,307	3,720	4,192
	130	684	1,020	1,365	1,706	2,032	2,486	3,039	3,583	4,030	4,542
16	100	562	837	1,120	1,400	1,667	2,040	2,493	2,940	3,307	3,727
	110	618	920	1,232	1,540	1,834	2,244	2,743	3,233	3,637	4,099
	120	674	1,004	1,344	1,680	2,001	2,448	2,992	3,527	3,968	4,472
	130	730	1,088	1,456	1,820	2,167	2,652	3,241	3,821	4,299	4,845
17	100	597	889	1,190	1,488	1,771	2,168	2,649	3,123	3,513	3,959
	110	657	978	1,309	1,636	1,949	2,384	2,914	3,436	3,865	4,355
	120	716	1,067	1,428	1,785	2,126	2,601	3,179	3,748	4,216	4,751
	130	776	1,156	1,547	1,934	2,303	2,818	3,444	4,060	4,567	5,147
18	100	632	941	1,260	1,575	1,876	2,295	2,805	3,307	3,720	4,192
	110	696	1,035	1,386	1,733	2,063	2,525	3,085	3,638	4,092	4,612
	120	758	1,130	1,512	1,890	2,251	2,754	3,366	3,968	4,464	5,031
	130	821	1,224	1,638	2,048	2,438	2,984	3,647	4,299	4,836	5,450
19	100	667	994	1,330	1,663	1,980	2,423	2,961	3,491	3,927	4,425
	110	734	1,093	1,463	1,829	2,178	2,665	3,257	3,840	4,319	4,868
	120	800	1,192	1,596	1,995	2,376	2,907	3,553	4,189	4,712	5,310
	130	867	1,292	1,729	2,161	2,574	3,149	3,849	4,538	5,105	5,753
20	100	702	1,046	1,400	1,750	2,084	2,550	3,117	3,674	4,133	4,658
	110	773	1,150	1,540	1,925	2,292	2,805	3,428	4,042	4,547	5,124
	120	842	1,255	1,680	2,100	2,501	3,060	3,740	4,409	4,960	5,590
	130	913	1,360	1,820	2,275	2,709	3,315	4,052	4,777	5,373	6,056
21	100	737	1,098	1,470	1,838	2,188	2,678	3,273	3,858	4,340	4,891
	110	812	1,208	1,617	2,021	2,407	2,945	3,600	4,244	4,774	5,380
	120	885	1,318	1,764	2,205	2,626	3,213	3,927	4,630	5,208	5,869
	130	958	1,428	1,911	2,389	2,845	3,481	4,254	5,016	5,642	6,358
22	100	772	1,151	1,540	1,925	2,292	2,805	3,428	4,042	4,547	5,124
	110	850	1,265	1,694	2,117	2,522	3,086	3,771	4,446	5,001	5,636
	120	927	1,381	1,848	2,310	2,751	3,366	4,114	4,850	5,456	6,149
	130	1,004	1,496	2,002	2,503	2,980	3,647	4,457	5,254	5,910	6,661
23	100	807	1,203	1,610	2,013	2,397	2,933	3,584	4,226	4,753	5,357
	110	889	1,323	1,771	2,214	2,636	3,226	3,943	4,648	5,228	5,893
	120	969	1,444	1,932	2,415	2,876	3,519	4,301	5,071	5,704	6,428
	130	1,049	1,564	2,093	2,616	3,116	3,812	4,660	5,493	6,179	6,964
24	100	842	1,255	1,680	2,100	2,501	3,060	3,740	4,409	4,960	5,590
	110	927	1,381	1,848	2,310	2,751	3,366	4,114	4,850	5,456	6,149
	120	1,011	1,506	2,016	2,520	3,001	3,672	4,488	5,291	5,952	6,708
	130	1,095	1,632	2,184	2,730	3,251	3,978	4,862	5,732	6,448	7,267
25	100	878	1,308	1,750	2,187	2,605	3,188	3,896	4,593	5,167	5,823
	110	966	1,438	1,925	2,406	2,866	3,506	4,286	5,052	5,683	6,405
	120	1,053	1,569	2,100	2,625	3,126	3,825	4,675	5,512	6,200	6,987
	130	1,141	1,700	2,275	2,844	3,387	4,144	5,065	5,971	6,716	7,570

9513334.0346

Pipe Deflection

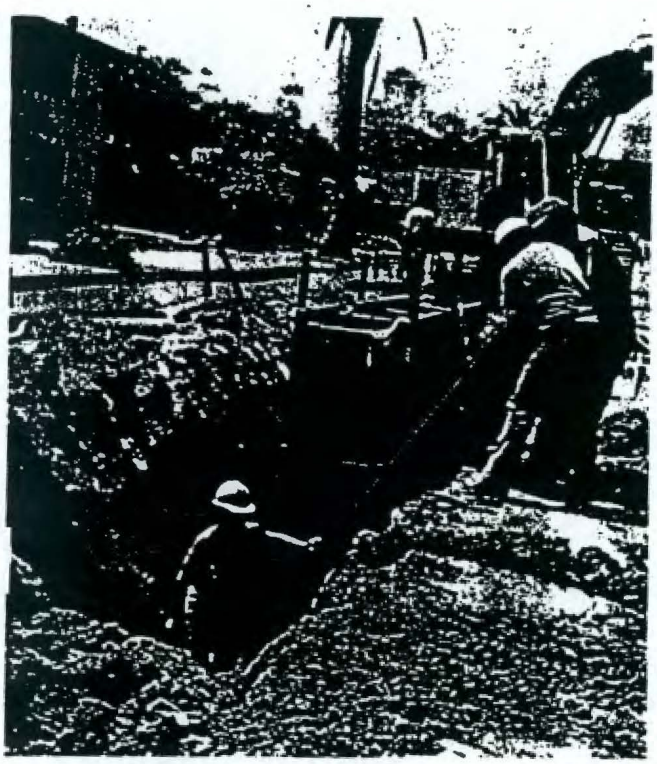

Deflection is defined as the change in vertical inside diameter of a flexible conduit when subjected to a vertical load. The amount of deflection that will occur in any flexible conduit is a function of three factors:

1. Pipe Stiffness ($F/\Delta y$)
2. Soil Stiffness
3. Load on the pipe

It is important to recognize that flexible conduits perform differently in the ground than they do under laboratory flat plate loading. The interaction of pipe stiffness and soil stiffness combine to give flexible conduits a high effective strength when buried.

Methods for Predicting Pipe Deflection

The most commonly used approach in predicting deflection has been the modified "Iowa Deflection Formula."

Modified Iowa Formula:

$$\Delta y = \frac{D_L K w r^3}{EI + .061 E' r^3}$$

Where:

Δy = vertical deflection (inches)

D_L = lag factor (1.5 maximum)

K = bedding factor

w = earth load (lb./in.)

r = mean radius $\left(\frac{OD-1}{2}\right)$ (in.)

E = modulus of elasticity (lb./in.^{2})

I = moment of inertia $t^3/12$ (in.^{3})

E′ = soil stiffness (lb./in.^{2})

Although considered a conservative approach, considerable variation in predicted deflection will result depending upon the choice of empirical constants E′, K and D_L.

Empirical methods of predicting deflection have evolved in recent yars which eliminate the guesswork inherent in the Iowa method.

When design is based on actual laboratory test and previous field measurements it is unnecessary to know the actual load acting on the pipe or the soil stiffness. Thus an installation can be designed with a known factor of safety provided enough empirical data is available.

To accommodate the problem of having to establish data for the number of trench widths that are found in the field, the prism load was chosen because it represents the maximum loading condition on a flexible pipe. Time lag to account for future settlement of the backfill can be included by choosing long-term values of deflection.

J-M has developed through laboratory tests and actual field data the maximum long term deflection chart, Figure 3, shown on page 7. This chart eliminates the guesswork in predicting deflection and gives the design engineer a quick ready reference. This chart is for PVC SDR 35 Sewer pipe only. The values given for deflection limits are the ultimate long term deflection that will occur in a particular soil class having a given density (compaction) in the haunching area of the pipe zone for various heights of cover (feet).

9513334.0347

Use of Maximum Long Term Deflection Chart

1. Where live loads are not a factor or not involved in the total external load on the pipe, the chart can be used directly to determine the limit of the maximum long-term deflection of the PVC pipe.

Example: If an 8" PVC SDR 35 Sewer Pipe is installed in Class IV material, having 85% compaction in the pipe zone and with 12 feet of cover, what will be the maximum long term deflection limit?

Answer: Pipe will never deflect more than 5% (color code—dark green).

2. Where live loads must be considered, determine, first, the combined total external load on the pipe. Next determine the equivalent prism load (without live load) for the particular pipe size involved using the table of prism loads, Table 1. Read across to the left for the height of cover (ft.) for the equivalent prism load. Using this height of cover with the bedding class and proctor density, enter the maximum long term deflection chart, Figure 3, to determine the maximum long term deflection limit.

Example: If a 12" PVC SDR 35 Sewer Pipe is installed in Class III material, having 65% compaction in the pipe zone, with 3 feet of cover, and 120 lbs./ft.^{3} soil, and H-20 (highway load) live load are imposed on the buried pipe, what will be the maximum long term deflection limit?

Answer: 1. The combined (dead and live) load on the pipe will be approximately 1000 lbs./ft.^{2} or 1000 x 1 ft. (pipe diameter in feet) = 1000 lbs./lin. ft. (per Figure 2). Enter table of prism loads (Table 1) under column 12—Pipe Diameter (inches)—and read down until nearest figure to 1000 is reached, across from soil wt. of 120 lbs./ft.^{3}. In this case, 1000 appears opposite 120 lbs./ft.^{3} and 8 ft.—height of cover. This represents the equivalent prism load for the combined (dead or live) load given above. Now enter maximum long term deflection chart and read the maximum long term deflection color code for Class III bedding classification, 65% density, and 8 ft. of cover. Dark green—maximum long term deflection will not exceed 5%.

In working with these charts, it becomes apparent that:

1. Soil density in the pipe zone plays a greater role than soil type in the control of deflection in buried flexible conduits.

2. The amount of deflection is independent of pipe size, providing all pipe sizes are SDR 35. Note pipe size does not appear in the chart for maximum long term deflections.

Maximum Long-Term Deflections of PVC (SDR 35) Pipe (Percent)

ASTM Bedding Classification		DENSITY (Proctor) AASHO T-99	3	5	8	10	12	14	16	18	20	22	24	26	28	30
Gravel	Class I															
	Class II	90%														
		80%														
Sand	Class III	90%														
		85%														
		75%														
		65%														
Clay	Class IV	85%														
		75%														
		65%														
Peat	Class V		This soil class not recommended													

■ Maximum long term deflection will not exceed 5%
□ Maximum 7.5% deflection
□ This zone not recommended.

Figure 3

Note: Deflection values shown do not include effect of live load or longitudinal bending.

1. No length of pipe installed under conditions specified will deflect more than is indicated; the pipe will deflect less than the amount indicated is specified density is obtained.
2. External loading based upon pipe which was initially circular prior to installation.
3. Deflections predicted are based upon pipe which is initially circular prior to installation. Actual deflections may differ because of initial out of roundness caused by storage and/or handling. These variations should be taken into account when measured deflections are compared with those in the table.
4. Bedding classifications are as indicated on page 8 and correspond to ASTM D2321.
5. Deflections listed in table are maximum long term values. The suggested maximum long term value is 7.5 percent which is approximately equal to 5 percent initial deflection.
6. Initial deflection is deflection taken within the 1st 24 hours after trench is backfilled.

9513334.0348

Pipe Zone Terminology

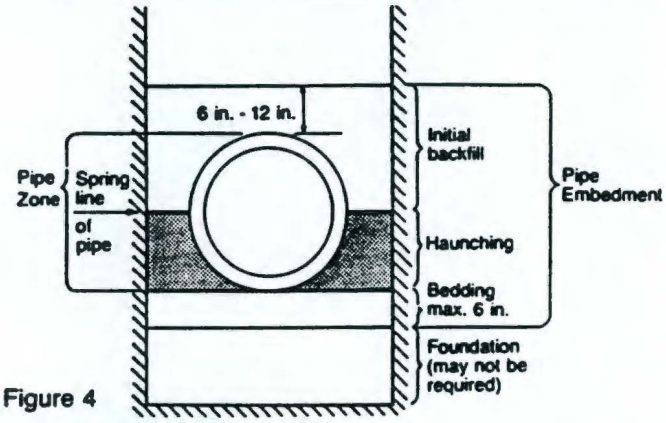

Figure 4

oundation preparation is nly required when the ench bottom is unstable. Any foundation that will support a rigid pipe without causing loss of grade or flexural breaking of pipe will be more than adequate for PVC pipes.

Bedding. The bedding directly underneath the pipe is required only to bring the trench bottom up to grade. It should not be so thick or soft that the pipe will settle and lose grade. The purpose of the bedding is to provide uniform longitudinal support of the pipe.

Haunching. The haunching area is the most important in terms of limiting the deflection of a flexible pipe. This is the area that should be compacted to the proctor densities shown in chart on page 7.

Initial Backfill. Initial backfill begins above the springline of the pipe to a plane 6 inches to 12 inches above the pipe. Compacting soils to levels above the springline gives little additional side support.

Most of the support is accomplished by compacting the soil surrounding the lower half of the pipe.

Caution: If hydro-hammers are used to prepare the bedding and backfill for the road surface, they should not be used within 3 feet of the top of the pipe and then only if the pipe zone soil density has been previously compacted to a minimum 85% standard proctor density.

Pipe Zone Materials

Pipe zone materials include the material in the haunching area and the initial backfill (see figure 4). They include a number of processed materials plus the soil types listed under USCS Soil Classification System (FHA Bulletin No. 373). These materials are grouped into five broad categories according to their suitability for this application, as follows:

Class I. Angular, ¼" to 1½" graded stone, including a number of fill materials that have regional significance such as coral, slag, cinders, crushed stone and crushed shells.

Class II. Coarse sands and gravels with maximum particle size of 1½ inch, including variously graded sands and gravels containing small percentages of fines, generally granular and non-cohesive, either wet or dry. Soil type GW, GP, SW and SP are included in this class.

Class III. Fine sand and clayey gravels, including fine sands, sand-clay mixtures, and gravel-clay mixtures. Soil types GM, GC and SM and SC are included in this class.

Class IV. Silt, silty clays, and clays, including inorganic clays and silts of medium to high plasticity and liquid limits. Soil types MH, ML, CH and CL are included in this class.

Class V. These materials are not recommended for bedding, haunching or initial backfill.

Key to Pipe Performance

The performance of a flexible conduit does not depend only on the Class of embedment materials used, but more importantly, on the density of the material in the haunching zone. The chart on page 7 shows that SDR 35 PVC sewer pipe will perform in Class III material equally as well as a Class I material with adequate compaction. By utilizing a combination of soil Class and soil density, the design engineer can achieve the most economical installation within recommended deflection limts.

Excavation and Pipe Laying. As with other pipes, the trench for PVC is excavated with bell holes to give uniform bearing along the full length of each pipe section. The ditch should be wide enough to allow for proper placement and compaction of the selected materials in the haunching area.

Sheeting. If soil conditions or regulations require the use of sheeting or boxes, they should be used in a manner as not to disturb the embedment material within two pipe diameters on each side of the pipe.

Compaction Techniques. Flooding or jetting are commonly used methods for obtaining desired densities of granular embedment materials. If flooding is used, the embedment materials should be allowed to dry below optimum moisture before final backfill operations are begun. If jetting is used, desired density of the

Installation

embedment materials should be previously obtained by other methods. Neither flooding or jetting should be used if the possibility of washing away side support exists.

Permissable Horizontal Curvature. When curved sewers are installed J-M Ring-Tite PVC gravity sewer pipe can be safely deflected to the limits shown in Table 2. Should design or field conditions dictate tighter radii, 5° deflection sweeps should be used.

Deflection Testing—When Is It Needed?

M's position on deflection sting is that routine measurement of deflection of installed PVC Sewer pipe (SDR 35), with minimum pipe stiffness of 46 psi, is totally unnecessary and uneconomical-a superfluous added construction for PVC Sewer pipe installations. This position applies to all routine deflection testing whether performed by the "Go-No-Go Gauge" method for compliance to maximum deflection limits or by instruments which measure and record actual pipe deflections. When recommended installation practices are followed, including required compaction in the haunching area, pipe deflection will not exceed our recommended long term deflection limit of 7.5%. At this deflection limit, the PVC Sewer pipe will have a minimum factor of safety of 4 in deflection failure. Proof of this position is that more than 150,000,000 ft. of PVC Sewer Pipe are performing satisfactorily in the field today.

On the other hand, where improper installation practices are known or suspected, questionable bedding materials are employed and/or installation conditions are severe, deflection testing of these sections of the sewer pipe installation should be considered advisable by the engineer.

Nominal Size Inches	Min. Radius Feet	Force Req. to Bend—Lbs. At End of 20' Length	12½' Length
4	150	6	10
5	150	20	33
8	200	48	78
10	250	95	152
12	300	160	255
15	350	293	468

Liner Offset at Minimum Radii

Nominal Size Inches	20' Length	12½' Length
4	24.0 Inches	9.3 Inches
6	15.9	6.3
8	11.9	4.7
10	9.6	3.8
12	8.0	3.1
15	N/A	2.7

Table 2

Fitting and Adaptors

J-M offers a complete line of PVC sewer fittings to be used with PVC Ring-Tite sewer pipe. These fittings offer the same "locked-in" rubber ring feature which eliminates the need for ring insertion in the field.

Rubber gasketed tee and wye saddles are available for field service line taps into previously installed PVC sewer lines, which eliminate the need for field solvent welding. Through the large network of J-M distributors, adaptors are available to connect J-M Ring-Tite PVC sewer pipe to other pipe materials.

The fitting illustrations below are representative only of the types of fittings and adaptors available. Actual configurations or design of fittings may vary with size or manufacturing origin of the fitting. Ask your J-M Sales Representative for more detailed information.

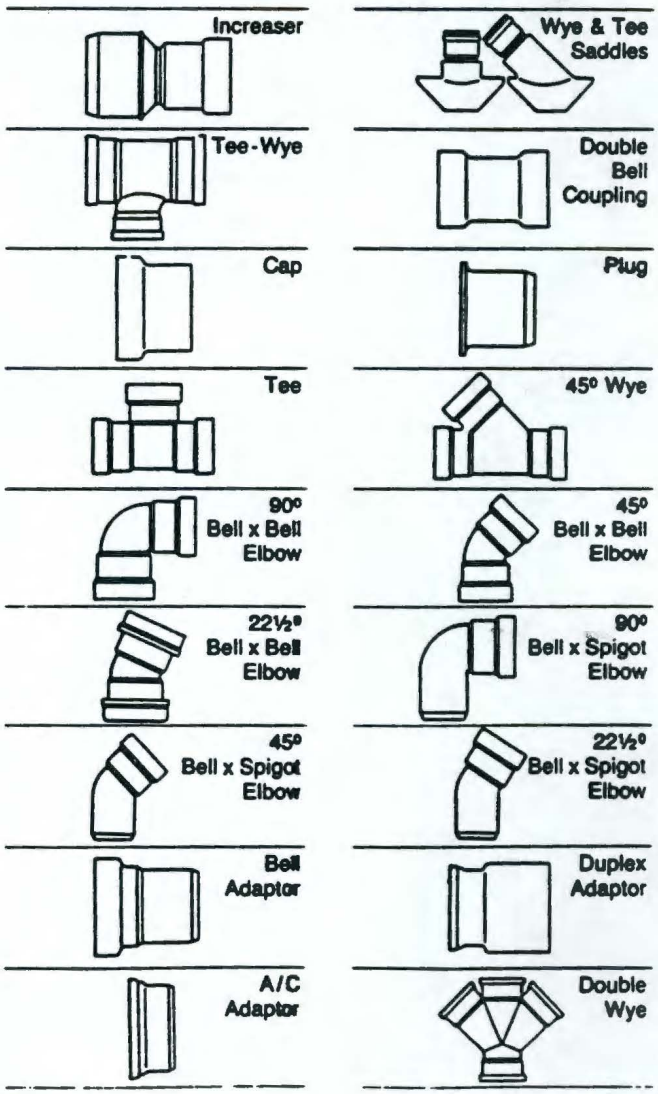

Figure 5

Short Form Specification

Scope
This specification designates general requirements for unplasticized polyvinyl chloride (PVC) Plastic Gravity Sewer Pipe with integral wall bell and spigot joints for the conveyance of domestic sewage.

Materials
Pipe and fittings shall meet the requirements of ASTM Specification D3034 for 4"-15" SDR 35 and F679 for 18"-27". The pipe shall be colored green for in-ground identification as sewer pipe.

Pipe
Pipe shall be suitable for use as a gravity sewer conduit. Provisions must be made for contraction and expansion at each joint with a rubber ring. The bell shall consist of an integral wall section with a solid cross-section rubber ring, factory assembled, securely locked in place to prevent displacement during assembly. Sizes and dimensions shall be as shown in this specification. Standard laying lengths shall be 20 ft. and 12.5 ft. ± 1 inch. At manufacturer's option, random lengths of not more than 15% of total footage of each size may be shipped in lieu of standard lengths.

Drop Impact Test
Pipe (6" long section) shall be subjected to impact from a free falling tup (20-lb. Tup A.) in accordance with ASTM Method of Test D2444. No shattering or splitting (denting is not a failure) shall be evident when the following energy is impacted:

Nominal Size Inches	Ft.-Lbs.
4	150
6	210
8	210
10	220
12	220
15	220
18	220
21	220
24	220
27	220

Fittings
All fittings and accessories shall be as manufactured and furnished by the pipe supplier or approved equal and have bell and/or spigot configurations compatible with that of the pipe.

Temperature for Testing
Pipe shall be designed to pass all tests at 73°F (±3°F).

Pipe Stiffness
Minimum "Pipe Stiffness" ($F/\Delta y$) at 5% deflection shall be 46 psi for all sizes when tested in accordance with ASTM Method of Test D2412, "External Loading Properties of Plastic Pipe by Parallel-Plate Loading."

Joint Tightness
Two sections of pipe shall be assembled in accordance with the manufacturer's recommendation. Joint shall be tested in accordance with ASTM D3212, "Joints for Drain and Sewer Plastic Pipe Using Flexible Elastomeric Seals."

Flattening
There shall be no evidence of splitting, cracking, or breaking when the pipe is tested as follows:

Flatten specimen of pipe, six inches long between parallel plates in a suitable press until the distance between the plates is forty percent of the outside diameter of the pipe. The rate of loading shall be uniform and such that the compression is completed within two to five minutes.

9513334.0351

TESTS FOR ELASTOMERIC MATERIALS

TEST	FERNCO MATERIAL MEETS OR EXCEEDS ALL OF THESE MINIMUM MATERIAL STANDARDS	ASTM TEST METHOD
Chemical resistance: 1N sulfuric acid 1N hydrochloric acid	 no weight loss no weight loss	D 543 (48 h at 23 ± 2°C)
Tensile strength Elongation	1200 psi (7/MPa) min; 300% min elongation at break	D 412
Hardness	Shore A durometer 55 min to 65 max	D 2240
Compression set	25% max of original deflection	D 395, Method B(22 h at 23 ± 2°C)
Water absorption	5% max	D 471 — Immerse a 2" (50mm) long section cut from a coupling in distilled water for 7 days at 70 ± 2°C
Oil immersion	80% max volume change	D 471 — immerse a 2" (50mm) long section cut from a coupling in ASTM oil no. 3 for 70 hours at 70 ± 2°C
Ozone resistance	No visible cracking under 2x specimen magnification using D518, Procedure B, stretched 20% and exposed to ozone concentrations of 0.5 ppm for 24 hours at +1°C	D 1149
Accelerated oven aging	85% min of original tensile strength; 80% min of original elongation	D 573 (7 days at 70 ± 2°C)
Tear strength	125 lbs./in. min	D 624 Die "C"
Fungicide	Must not promote growth of fungus or bacteria	—

ACID RESISTANCE CHART

9513334.0352

FERNCO

R — Recommended
N — Not Recommended

REAGENT	PVC 72°F	PVC 140°F
Acetic Acid 20%	R	R
Acetic Acid 80%	N	N
Acetone	N	N
Alcohol (Methyl or Ethyl)	R	R
Aluminum Chloride	R	R
Aluminum Sulfate	R	R
Alums	R	R
Ammonia Gas (Dry)	R	R
Ammonium Chloride	R	R
Ammonium Hydroxide	R	R
Ammonium Nitrate	R	R
Ammonium Phosphate	R	R
Ammonium Sulfate	R	R
Ammonium Sulfide	R	R
Amyl Chloride	N	N
Aniline	N	N
Aqua Regia	N	N
Barium Chloride	R	R
Barium Hydroxide 10%	R	R
Barium Sulfate	R	R
Barium Sulfide	R	R
Beer	R	R
Beet Sugar Liquors	R	R
Benzene	N	N
Benzoic Acid	R	R
Black Liquor	N	N
Bleach — 12.5% active Cl_2	R	R
Boric Acid	R	R
Bromic Acid	R	R
Bromine Water	N	N
Butane	N	N
Butyric Acid	N	N
Calcium Carbonate	R	R
Calcium Chloride	R	R
Calcium Hydroxide	R	R
Calcium Hypochlorite	R	R
Calcium Sulfate	R	R
Cane Sugar Liquors	R	R
Carbon Bisulfide	N	N
Carbon Dioxide	R	R
Carbon Monoxide	R	R
Carbon Tetrachloride	N	N
Carbon Acid	R	R
Caustic Soda	R	R
Caustic Potash	R	R
Chloride (Dry)	N	N
Chloride (Wet)	N	N
Chloroacetic Acid	N	N
Chlorobenzene	N	N
Chloroform	N	N
Chromic Acid 10%	N	N
Chromic Acid 50%	N	N
Citric Acid	R	R
Copper Chloride	R	R
Copper Cyanide	R	R
Copper Nitrate	R	R
Copper Sulfate	R	R
Cottonseed Oil	N	N
Cresol	N	N
Cyclohexanol	N	N
Cyclohexanone	N	N
Dimethylamine	N	N
Dioctylphalate	N	N
Disodium Phosphate	N	N

REAGENT	PVC 72°F	PVC 140°F
Distilled Water	R	R
Ethers	N	N
Ethyl Acetate	N	N
Ethylene Chloride	N	N
Ethylene Glycol	N	N
Fatty Acids (C6)	R	R
Ferric Chloride	R	R
Ferric Sulfate	R	R
Flourine (Gas-Wet)	N	N
Formaldehyde (37%)	N	N
Formic Acid (90%)	N	N
Freon 12	N	N
Fruit Juices & Pulp	R	R
Furfural	N	N
Gasoline (Refined)	N	N
Glucose	R	R
Glycerine	N	N
Hydrobromic Acid (20%)	N	N
Hydrochloric Acid	R	R
Hydrocyanic Acid	N	N
Hydrogen Peroxide 90%	R	R
Hydroquinone	R	R
Hypochlorous Acid	R	R
Iodine	N	N
Kerosene	N	N
Lactic Acid 25%	R	R
Linseed Oil	N	N
Liquers	N	N
Machine Oil	N	N
Magnesium Chloride	R	R
Magnesium Sulfate	R	R
Maleic Acid	N	N
Methyl Chloride	N	N
Methyl Ethyl Ketone	N	N
Milk	R	R
Mineral Oils	N	N
Mixed Acids	N	N
Muriatic Acid	R	R
Nickel Chloride	R	R
Nickel Sulfate	R	R
Oils & Fats	N	N
Oleic Acid	N	N
Oleum	N	N
Oxalic Acid	R	R
Palmitric Acid 10%	N	N
Perchloric Acid 10%	R	R
Perchloric Acid 70%	N	N
Petroleum Oils (Sour)	N	N
Phenol 5%	N	N
Photographic Solutions	R	R
Phosphorous Trichloride	N	N
Picric Acid	N	N
Plating Solutions	R	R
Potassium Carbonate	R	R
Potassium Chlorate	R	R
Potassium Chloride	R	R
Potassium Cyanide	R	R
Potassium Dichromate	R	R
Potassium Hydroxide	R	R
Potassium Permanganate 10%	R	R
Potassium Sulfate	R	R
Propane Gas	R	R
Propyl Alcohol	R	R
Sea Water	R	R

REAGENT	PVC 72°F	PVC 140°F
Sewerage	R	R
Silver Cyanide	R	R
Silver Nitrate	R	R
Silver Sulfate	R	R
Sodium Bicarbonate	R	R
Sodium Bisulfite	R	R
Sodium Carbonate	R	R
Sodium Cyanide	R	R
Sodium Ferrocyanide	R	R
Sodium Hydroxide	R	R
Sodium Hypochlorite	R	R
Sodium Sulfate	R	R
Sodium Sulfide	R	R
Sodium Sulfite	R	R
Sodium Thiosulfate	R	R
Stannic Chloride	R	R
Stannous Chloride	R	R
Stearic Acid	R	R
Sulfite Liquor	R	R
Sulfur	R	R
Sulfur Dioxide (Dry)	R	R
Sulfur Dioxide (Wet)	R	R
Sulfuric Acid 50%	R	R
Sulfuric Acid 70%	R	R
Sulfuric Acid 93%	N	N
Sulforous Acid	N	N
Tannic Acid	R	R
Tanning Liquors	R	R
Tartaric Acid	R	R
Toluene	N	N
Trichloroethylene	N	N
Triethanolamine	N	N
Trisodium Phosphate	N	N
Turpentine	N	N
Urea	R	R
Urine	R	R
Vinegar	R	R
Water (Mine)	R	R
Water (Fresh)	R	R
Water (Salt)	R	R
Whiskey	R	R
Wines	R	R
Xylene	N	N
Zinc Chloride	R	R
Zinc Sulfate	R	R

NOTE: The data listed in this table is only to give information in regard to general use and does not constitute a guarantee. Materials should be tested under actual service to determine suitability for a particular purpose.

PVC PIPE SCHEDULE 40/DWV

STANDARDS: ASTM 1785 NSF PW
ASTM 2665 NSF DWV

SCHEDULE 40/DWV

NOMINAL PIPE SIZES (INCHES)	NOMINAL O.D. (INCHES)	NOMINAL I.D. (INCHES)	NOMINAL WALL THICKNESS (INCHES)	WATER PRESS RATING AT 23°C (73°F)	APPROX. WEIGHT LBS./FT.	FEET PER UNIT	APPROX. WEIGHT PER UNIT
½*	.840	.612	.109	600	.162	7200	1166
¾*	1.050	.824	.113	480	.215	8000	1720
1*	1.315	1.049	.133	450	.320	5600	1792
1¼	1.660	1.380	.140	370	.433	3920	1697
1½	1.900	1.610	.145	330	.518	3600	1864
2	2.375	2.067	.154	280	.696	2220	1545
2½*	2.875	2.469	.203	300	1.103	1740	1919
3	3.500	3.068	.216	260	1.443	1500	2165
4	4.500	4.026	.237	220	2.055	1140	2343
6	6.625	6.065	.280	180	3.616	420	1519
8	8.625	7.981	.322	160	5.439	300/360	1958

Standard Color: White
Standard Length: 20'.
Up to 15% Can Be Shipped As Random Lengths.

* Schedule 40 Only.
**Not Normally Sold In TL Quantities Through 2 1/2" Due To Extreme Footage Involved And Exceeding Maximum TL Allowable Weights.

Note: DWV Available From Green Cove Springs, FL Plant Only.

9513334.0354

SEWER PIPE FITTINGS

9513334.0355

Short Form Specification

Scope
This specification designates general requirements for unplasticized polyvinyl chloride (PVC) Plastic Gravity Sewer Pipe with integral wall bell and spigot joints for the conveyance of domestic sewage.

Materials
Pipe and fittings shall meet the requirements of ASTM Specification D3034 for 4"-15" SDR 35 and F679 for 18"-27". The pipe shall be colored green for in-ground identification as sewer pipe.

Pipe
Pipe shall be suitable for use as a gravity sewer conduit. Provisions must be made for contraction and expansion at each joint with a rubber ring. The bell shall consist of an integral wall section with a solid cross-section rubber ring, factory assembled, securely locked in place to prevent displacement during assembly. Sizes and dimensions shall be as shown in this specification. Standard laying lengths shall be 20 ft. and 12.5 ft. ± 1 inch. At manufacturer's option, random lengths of not more than 15% of total footage of each size may be shipped in lieu of standard lengths.

Drop Impact Test
Pipe (6" long section) shall be subjected to impact from a free falling tup (20-lb. Tup A.) in accordance with ASTM Method of Test D2444. No shattering or splitting (denting is not a failure) shall be evident when the following energy is impacted:

Nominal Size Inches	Ft.-Lbs.
4	150
6	210
8	210
10	220
12	220
15	220
18	220
21	220
24	220
27	220

Fittings
All fittings and accessories shall be as manufactured and furnished by the pipe supplier or approved equal and have bell and/or spigot configurations compatible with that of the pipe.

Temperature for Testing
Pipe shall be designed to pass all tests at 73°F (±3°F).

Pipe Stiffness
Minimum "Pipe Stiffness" ($F/\Delta y$) at 5% deflection shall be 46 psi for all sizes when tested in accordance with ASTM Method of Test D2412, "External Loading Properties of Plastic Pipe by Parallel-Plate Loading."

Joint Tightness
Two sections of pipe shall be assembled in accordance with the manufacturer's recommendation. Joint shall be tested in accordance with ASTM D3212, "Joints for Drain and Sewer Plastic Pipe Using Flexible Elastomeric Seals."

Flattening
There shall be no evidence of splitting, cracking, or breaking when the pipe is tested as follows:

Flatten specimen of pipe, six inches long between parallel plates in a suitable press until the distance between the plates is forty percent of the outside diameter of the pipe. The rate of loading shall be uniform and such that the compression is completed within two to five minutes.

9513334.0356

J-M PVC FITTINGS

THE RIGHT CHOICE

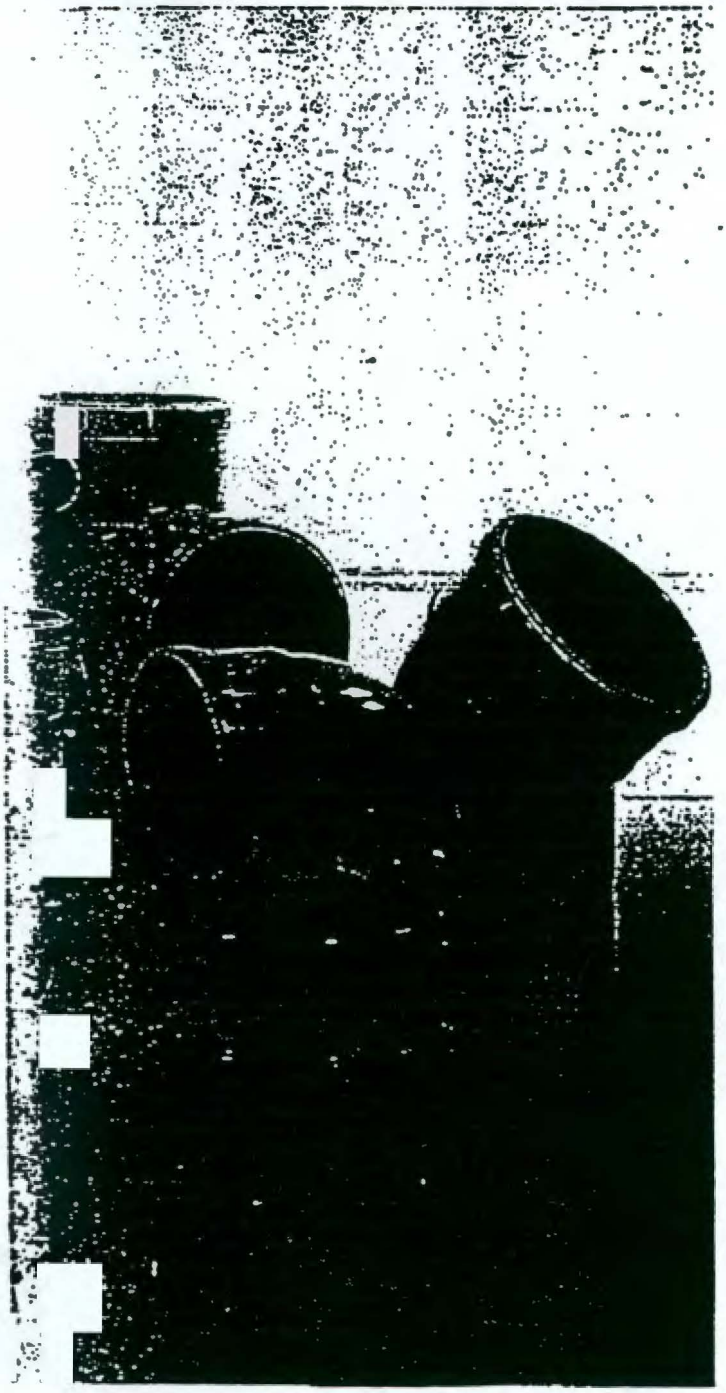

J-M offers a complete line of PVC sewer fittings to be used with PVC Ring-Tite sewer pipe. J-M's new line of PVC fittings are available in sizes 4" through 15". The 4", 6" and 8" are a one piece integral bell injection molded fitting manufactured by J-M.

The 10", 12" and 15" are a thermomolded fitting manufactured by Nylopiast USA, Inc. Rubber gasketed tees and wye saddles are also available for field service line taps into previously installed PVC sewer lines, which eliminates the need for solvent welding.

Introduction

The growing demand for an effective attack on water pollution requires the need for improved sanitary sewage collection systems.

A modern system needs fittings with improved design for strength and stiffness all within the scope of minimizing sewer system capacity at reasonable costs. J-M PVC sewer fittings are designed to meet this need.

Meets National Standards

ASTM	D3034	4" - 15"
ASTM	D3212	Joints

Application

J-M PVC sewer fittings are suitable for conveying domestic sanitary sewage as well as certain industrial wastes. For further information regarding the suitability of PVC fittings for conveying various chemicals, contact the J-M representative in your area.

Advantages

1. **Chemical Resistant**
   J-M PVC sewer fittings are unaffected by fluids found in ordinary domestic sewage. They are immune to sewer gases and the sulfuric acid generated by the completion of the hydrogen sulfide cycle. They are immune to corrosive soils, both alkaline or acidic.
2. **Abrasion Resistant**
   J-M PVC sewer fittings have excellent resistance to abrasion, gouging and scoring - superior to that of most common piping materials.

The fitting illustrations are representative of the types of fittings available. Most fittings are available in either all bell or bell x spigot.

Bell/Spigot

All Bends, Tees and Wyes are available, either all gasketed or with one spigot end.

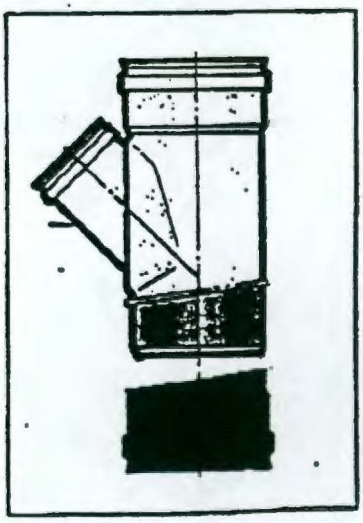

SPIGOT

Unloading

The means by which PVC Gravity Sewer Pipe is unloaded in the field is the decision and responsibility of the customer. Preferred unloading is in units using mechanical equipment, such as forklift trucks, cherry pickers or front end loaders with forks. Pipe may also be unloaded by hand.

When unloading units, the following instructions should be carefully followed. Remove one unit at a time.

A. Remove restraints from the top unit loads. These may be either nylon straps or ropes.

B. If there are 1"x 4" boards across the top and down the sides of the units, remove them.

C. Use a forklift (or front end loader equipped with forks) to remove each top unit separately. Remove back units first. Do not run the forks too far under the unit being unloaded because fork ends striking adjacent units may cause damage.

D. If a forklift is not available, a spreader bar on top and nylon straps capable of handling the load, spaced approximately 8 feet apart and looped under the unit may be used. Cables should be cushioned with a rubber hose sleeve or other material to prevent abrasion of the pipe.

E. During the removal and handling be sure that the units do not strike anything. Severe impact could cause damage, particularly during very cold weather.

F. Do Not:
   1) Handle units with chains or single cables.
   2) Attach cables to unit frames for lifting.

G. Units should be:
   1) Stored and placed on level ground.
   2) Stacked no more than 2 units high.
   3) Protected by dunnage the same way they were loaded on the truck. The dunnage must support the weight of all units so that pipe lengths do not carry the weight of the unit loaded above them.

H. To unload lower units, repeat the above process (Items A through G).

Preferred unloading is in units. If unloading equipment is not available, pipe may be unloaded by removing individual pipes by cutting the bands that secure the top tiers to the tiers below. However, care should be taken to insure that pipe is not dropped or damaged. Because the bands are tightly bound the pipe may have a tendency to move when a band is cut. Make sure the truck is parked on level ground and that no person is standing near either side of truck in case a length of pipe should roll off. Do not stand on the banded pipe while cutting the band.

Cold Weather Handling

As the temperature approaches and drops below freezing, the flexibility and impact resistance of PVC pipe is reduced. Extra care should be used in handling during cold weather.

Pipe at the bottom of a stack may become out-of-round due to the weight of the material stacked above it. At normal application temperatures, this corrects itself soon after the load is removed. Under freezing conditions, this recovery to initial roundness may take several hours.

Stockpiles

Stockpiles should always be built on a flat base. If mechanical equipment is being used to handle, the unit bearing pieces provide an excellent base. If unloading by hand, secure two timbers for a base. Set them on a flat area spaced the same as a factory load. Nail stop blocks at each end. Build up the stockpile in the same manner as it was stacked for shipment, transferring dunnage and chock blocks from the load to the stockpile.

Individual lengths of pipe should be stacked in piles no higher than 5 feet.

It should be noted that when PVC pipe is stored outside and exposed to prolonged periods of sunlight, an obvious discoloration of the pipe can occur. This discoloration is an indication of reduction in pipe impact strength. Pipe possessing discoloration should be handled with care during installation. This discoloration is a surface layer of hardened plastic and does not affect the long term properties or performance characteristics of the pipe if handled properly during installation.

A method of protecting pipe during long exposures (several months or more) to sunlight is to cover it with canvas or other opaque material. Do not use clear plastic sheets, and be sure to provide air circulation under the protective cover.

Distribution Along Trench

In stringing out pipe, keep these points in mind:

1. Lay pipe as near the trench as possible to avoid excess handling.
2. If trench is open, it is advisable to string pipe on the side away from excavated soil wherever possible. This will allow pipe to be moved easily to the edge of the trench for lowering into position.
3. If trench is not yet open, find out to which side excavated soil will be thrown; then string out pipe on the opposite side (leave room for excavator).
4. Place pipe so as to protect it from traffic and heavy equipment. Also safeguard it from the effect of any

73

9513334.0357

blasting that may be done.

5. Direct Sunlight may cause the exposed side of the pipe to heat up creating a bow in the pipe. Should this occur, the bow may be alleviated by rotating the cool side toward the sun or by placing the pipe in the shade.

   Leaving pipe in units minimizes bowing due to heat from the sun.

6. It is normal practice to string pipe with Bell Ends pointing upgrade.

Loading Transfer Trucks
Use trucks with long bodies so that pipe lengths do not overhang more than 2 feet. Make certain that the truck bed is smooth, without cross-strips, bolt heads, or other protrusions that could damage the pipe.

Place first layer with bell ends overhanging. Avoid sliding the pipe and abrading it. Subsequent layers can be slid into place. All bell ends should overhang the layer below.

Short body trucks may be used if fitted with racks that properly support the pipe in a horizontal position. The rack should support the pipe in a horizontal position, with supports spaced every 3 feet or less along the pipe lengths. Pad contact areas to avoid damage to pipe.

Rubber Rings
J-M PVC Gravity Sewer Pipe provides a factory installed rubber gasket in the bell eliminating the need for field insertion. Some fittings such as adaptors and manhole couplings do not utilize a factory installed rubber ring. Rings must be inserted in these fittings and adaptors.

Excavating the Trench

As a general rule, do not open the trench too far ahead of pipe laying. Avoiding long stretches of opened trench will often pay dividends; for example:

1. It may reduce, or even eliminate pumping or sheeting.
2. It minimizes the possibility of flooding the trench.
3. It reduces caving caused by ground water.
4. It helps avoid frozen trench bottom and backfill.
5. It reduces hazards to traffic and workmen.

Line and Grade
It is important for many reasons that the line of an installed sanitary sewer be accurate and according to design.

It is common practice for sewer lines to be laid straight from manhole to manhole. Manholes are currently the most widely accepted method of changing the direction of a sewer line.

Curved Sewers
Curved sewers are becoming more widely used throughout the United States. When J-M PVC Gravity Sewer Pipe is installed for curved sewers, the pipe can be horizontally deflected within the limits shown below.

Radius of Curvature Chart

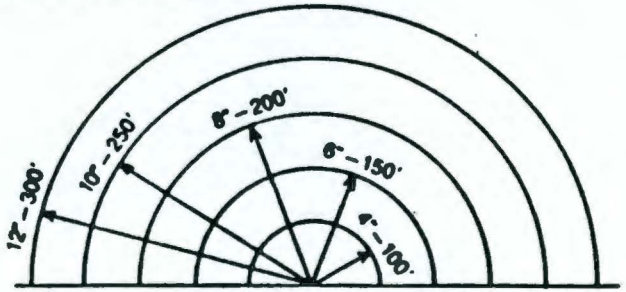

Minimum Radii of Curvature (Feet)

4	100 feet
6	150
8	200
10	250
12	300
15	350
18	450
21	525
24	600
27	675

Note: Mechanical means should not be used to accomplish these radii. It is the intent that this should be accomplished manually in the trench by the workers. The curve should be accomplished by bending the pipe rather than deflecting the joints. Overbelling of joints should be avoided.

Trench Width
The width of the trench at the top of the pipe should be wide enough to allow for proper placement and compaction of the haunching material. Generally the minimum trench width should be no less than 18 inches or one foot greater than the outside diameter of the pipe, whichever is greater.

For a rigid pipe, keeping the trench width narrow is important since the load on the pipe is a function of trench width. However, for a flexible pipe, the load on the pipe is the "prism load", which is the weight of the prism of soil directly above the pipe. Thus, precautions in keeping the trench narrow are unnecessary for a flexible pipe installation. The important thing is to compact the haunching material out to the undisturbed trench walls.

9513334.0358

Measuring Deflection

Occasionally, there will be a requirement for monitoring vertical deflection to insure that the requirements of the specification are being met.

There are several methods used in the industry today:

1. Electronic deflectometer
2. Rigid "Go-No Go" device

The most commonly and least expensive method in use is the rigid Go-No Go device. This device is pulled through the line and measures only a "Go-No Go" basis.

When using a Go-No Go device. to check deflection several steps should be followed.

1. Make sure the line is clean and free of debris that might cause the device to jam. It is recommended that the line be cleaned with a hydro-cleaner washing in the direction of flow.
2. The next step is to pull a line through the pipe with which to pull the Go-No Go device. This can be done several ways.

   a. If a hydro cleaner is being used, attach the pull line to the nozzle end before the actual cleaning cycle starts. As the hose is pulled through the line, it will carry the pull line with it. When the hose nozzle reaches the manhole, disconnect the pull line and tie it off.

   b. A parachute device can be blown through the line with a lightweight string attached. Detach the string, and attach the pull line. Manually drag the pull line through. Tie off at each manhole.

   c. If a sewer line is in service, a string can be floated through the manhole run. When the string reaches the next manhole, attach it to the pull line and drag through. Tie the pull line at each manhole.
3. Pulling of the gauge is usually done by hand. The pulling motion should be smooth and easy to avoid jamming the gauge if an obstruction is encountered in the line. The gauge should have a line on each end to facilitate removal should the gauge become obstructed in the direction of pull. If the gauge stops lightly, pull on it to see if it will clear the obstruction. When it appears that the gauge will not go forward, record the distance from the manhole at which the gauge is stuck and then pull the gauge back out.

   Do not use mechanical equipment to force the gauge through. This may result in a broken pull line.

When using a "Go-No Go" device, it is recommended that the design be such that it will allow obstructions, such as gravel, to pass through. The following table lists the Base I.D. of PVC Gravity Sewer Pipe and the Mandrel O.D. for a 7½% deflection test.

PIPE SIZE	BASE I.D. (in.)	7.5% MANDREL SIZING (in.)
6	5.742	5.31
8	7.665	7.09
10	9.563	8.84
12	11.361	10.51
15	13.898	12.66
18	16.976	15.70
21	20.004	16.50
24	22.480	20.79
27	25.327	23.43

Installation of Pipe

An understanding of flexible conduit terminology is essential for the installer. The soil Class and density realized in the bedding, haunching, and initial backfill as well as the manner and care with which they are placed, are important factors in achieving a satisfactory installation of a flexible conduit.

The following figure has been prepared to illustrate the meaning and limits of the various zones used with flexible conduit terminology.

Pipe Zone Terminology

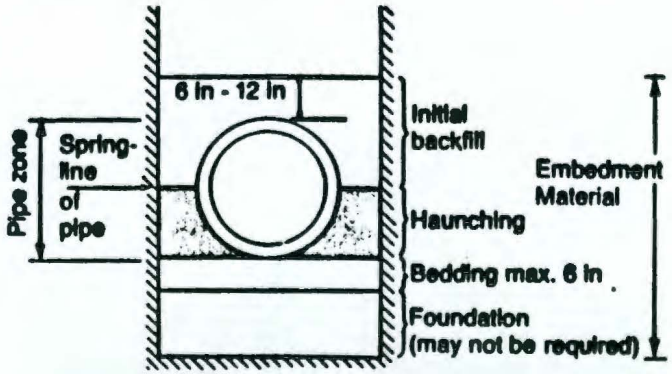

Foundation: A foundation is required when the trench bottom is unstable. Any foundation that will support a rigid pipe without causing loss of grade or flexural breaking will be more than adequate for PVC pipes.

Bedding: The bedding directly underneath the pipe is required only to bring the trench bottom up to grade. It should not be so thick or soft that the pipe will settle and lose grade. The purpose of the bedding is to provide a firm, stable and uniform support of the pipe.

95133340359

Haunching: The haunching area is the most important in terms of limiting the deflection of a flexible pipe. This is the area that should be compacted to the required or specified density.

Initial Backfill: Initial backfill begins above the springline of the pipe to a level 6 in. to 12 in. above the top of the pipe. Compacting soils to levels above the springline gives little additional side support.

Most of the support is accomplished by compacting the soil around the lower half of the pipe and horizontally away from the pipe in both directions to the undisturbed trench walls.

Note: If hydro-hammers are used to prepare a bedding for the road surface they should not be used within 3 feet of the top of the pipe. Hydro-hammers can be used at distances greater than 3' above the top of the pipe if the soil density has been previously compacted to a minimum 85% standard procter.

Embedment Materials

Embedment materials listed here include a number of processed materials plus the soil types listed under USCS Soil Classification System (FHA Bulletin No. 373 or ASTM D2487). These materials are grouped into five broad categories according to their suitability for this application.

Description of Embedment Materials

Class I Angular, ¼" to 1½" graded stone, including a number of fill materials that have regional significance, such as coral, slag, cinders, crushed stone and crushed shells.

Class II Coarse sands and gravels with maximum particle size of 1½ inch, including variously graded sands and gravels containing small percentages of fines, generally granular and non-cohesive, either wet or dry. Soil Types GW, GP, SW, and SP are included in this class.

Class III Fine sand and clayey gravels, including the fine sands, sand-clay mixtures, and gravel-clay mixtures. Soil Types GM, GC, SM and SC are included in this class.

Class IV Silt, silty clays, and clays, including inorganic clays and silts of medium to high plasticity and liquid limits. Soil Types MH, ML, CH AND CL are included in this class.

Class V This class includes the organic soils OL, OH, and PT as well as soils containing frozen earth, debris, rocks larger than 1½" in diameter, and other foreign materials. These materials are not recommended for bedding, haunching, or initial backfill.

Note: The performance of a flexible conduit does not depend only on the class of embedment materials used,

but more importantly, on the density achieved in compaction of the haunching material.

Selection of Embedment Materials

Soil to be placed for bedding and used in the pipe zone should be capable of maintaining the specified soil density. If a coarse granular Class I material is used for bedding the pipe, it should also be used for haunching at least to the springline of the pipe. Otherwise side support may be lost due to the migration of Class II, III, or IV material into the bedding.

When selecting embedment materials, make sure that native soil migration from the trench walls cannot occur. A well graded compacted granular material will prevent this condition from occurring. In trenches subject to ground water inundation the granular material should be compacted to a minimum 85% Proctor density.

Preparation of Trench Bottom

Preparation of the trench bottom is the starting point for a satisfactory, safe sewer pipe installation. The trench bottom should be smooth and free from large stones, large dirt clods, and any frozen material as approved by the engineer. Excavation for bells (bell holes) should be provided so that the pipe is uniformly supported along its entire length. It is economical on most sewer installations to undercut the trench bottom by machine and bring it up to proper grade by use of granular material. Granular material placed in the trench by equipment should be shaped by hand to provide a satisfactory bedding for the pipe which is firm and gives continuous support for the pipe.

Coarse sand, crushed stone, or shell, afford the most economical granular material because compaction is easily obtained by a minimum of tamping with granular materials. As with any other type of soil, the primary objective in placement is to eliminate voids under and around the lower half of the pipe. Granular materials should be "worked in" until the trench bottom uniformly supports and positions the pipe to final grade.

Instead of granular material the undercut may be filled and brought to proper grade by use of selected backfill of excavated soil providing the soil is free of large stones (larger than 1½" in diameter), hard lumps, and debris, and can be properly compacted by tamping. Soils containing large rocks, a high content of organic matter, lumpy clay, and unstable muck, should not be used individually or in combination for pipe bedding.

On rocky trenches place a minimum 4-inch layer of selected backfill material to provide a cushion for the pipe. To accomplish this, rock should be excavated below the required grade and at least 4 inches of select fill used to

9513334.0360

to bring pipe to grade. Any pipe material which rests directly on rock is subject to breakage or damage under the weight of backfill, live load or soil movements.

When an unstable trench bottom is encountered and, in the opinion of the engineer, it cannot support the pipe, an additional depth should be excavated and refilled to pipe grade with foundation and bedding material approved by the engineer. This material should be compacted to at least 85% Proctor density.

Lowering Pipe and Fittings into the Trench
Lower PVC Sewer Pipe into the trench either by hand or by mechanical means. Do not kick or throw PVC pipe and fittings into the trench.

Pipe and fittings should be inspected for defects or damage prior to lowering into the trench. Any defective, damaged, or unsound pipe should be repaired or replaced and all foreign matter and soil should be removed from the interior of the pipe and fittings before lowering into the trench.

Assembly of Pipe

Your J-M PVC Gravity Sewer pipe has a factory installed rubber ring joint. The Ring-Tite joint is a sliding assembly in which the lubricated pipe spigot end slides under the rubber ring and into the bell as described as follows:

Assembly Steps

1. Make certain the bell and rubber ring are clean having no foreign material that could interfere with the proper assembly of the pipe spigot.

2. Make sure the pipe spigot end is clean. Wipe with a clean dry cloth around the entire circumference from the pipe end to one inch beyond the reference mark.

3. Lubricate the spigot end of the pipe, using only the J-M Ring-Tite lubricant supplied. Be sure to cover the entire spigot end circumference. The coating should be the equivalent of a brush coat of enamel paint. It can be applied by hand, cloth, pad, sponge or glove.

Caution: After spigot end is lubricated, do not allow it to touch the bedding material. Small pieces of stone or soil stick to the lubricant and may become lodged between the spigot and rubber ring upon assembly possibly causing a leak.

4. Insert the spigot end into the bell so that it is in contact with the rubber ring. Keep the pipe lengths in proper alignment. Brace the bell while the spigot end is pushed in under the rubber ring, so that previously completed joints will not be closed up. Push the spigot into the bell until the reference mark on the pipe barrel is flush with the end of the bell. Pipe can be easily assembled by hand or by bar and block. Stabbing is not recommended and should be avoided.

   Caution: If joint is overassembled causing the spigot to jam into the neck of the bell, flexibility of the joint is

77

9513334.0361

lost. Uneven settlement of trench may cause this type asembly to leak—do not assemble beyond the reference mark!

Caution: Overassembly must also be avoided because it will cause the spigot to squeeze down in the neck of the bell creating a reduced internal diameter of the spigot end.

If deflection testing is conducted the pipe may appear as over-deflected.

Lubricant Requirements
The following table gives the number of pipe joints that can be assembled with a container of lubricant:

Pipe Size (inches)	1 Qt. Can
4	85
6	50
8	31
10	25
12	13
15	13
18	4
21	3
24	3
27	2

Backfilling and Tamping

Backfilling should follow pipe assembly as closely as possible. This protects pipe from falling rocks, eliminates possiblity of lifting the pipe from grade due to flooding of open trench, avoids shifting pipe out of line by cave-ins and, in cold weather, lessens possibility of backfill material becoming frozen.

There are two basic purposes of the haunching and initial backfilling of a flexible conduit such as J-M PVC Gravity Sewer Pipe.

1. To provide the soil side support, which is necessary to enable the pipe and the soil to work together to meet the designed load requirements within the allowable deflection limit.
2. To provide protection for the pipe from impact damage due to large rocks, etc. contained in the final backfill.

The essentials of satisfactory haunching and initial backfilling can be summarized as follows:

1. Provide approved materials, properly compacted continuously above the bedding and around the pipe to the springline, as well as between the pipe and the undisturbed trench walls.

2. Provide a cushion of approved materials up to 12 inches over the pipe and between the trench walls, in accordance with the engineer's specifications.

After initial backfilling has been accomplished, the balance of the backfill can be done by machine.

Tamping Equipment and Methods
The first step in providing effective support for the pipe in the haunching area is to tamp the embedment materials under the haunches and around the pipe to the springline of the pipe.

Tamping should be done with hand tamping bars, mechanical tampers or by using water to consolidate the embedment material. With hand tamping, satisfactory results can be accomplished in damp, loamy soils and sands. For more cohesive soils, the necessary compaction may require the use of mechanical tampers. Water tamping should be *limited to trenches excavated in soils from which water drains through quickly and*, in so doing, compacts the embedment material.

Tamping Bars
Two types of tamping bars should be available for a good tamping job. First should be a bar with a narrow head. (See A or B below). These are used to tamp under the pipe. The second tamping bar should have a flat head. It is used to compact the soil along the sides of the pipe to the trench walls. (See C below).

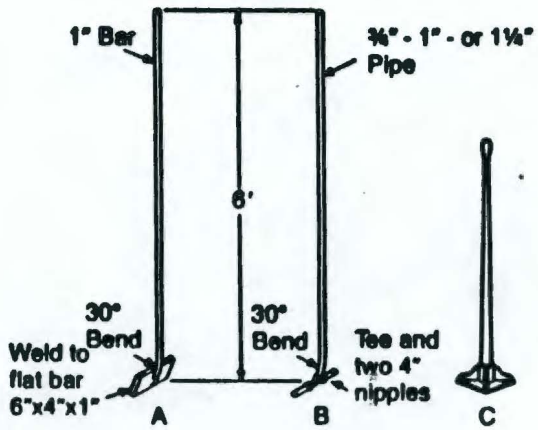

(Do not attembt to use the flat tamper in place of A or B—it will not do the work properly.)

9513334.0362

Mechanical Tampers
Care should be taken to avoid contact between the pipe and compaction equipment. Compaction of the embedment material should generally be done in such a way that the compaction equipment is not used directly above the pipe until sufficient backfill has been placed to assure that the use of the compaction equipment will not damage the pipe or cause deflection of (in) the pipe.

When hydro-hammers are used to achieve compaction, they should not be used within three (3) feet of the top of the pipe and then only if the embedment material density has been previously compacted to a minimum 85% Proctor density.

Flood or Water Tamping
Flooding or water tamping should be used only in trenches that are excavated in soils from which water drains quickly and, at the same time, compacts the haunching material.

If flooding is used, the approved embedment material is first handplaced, making certain that all voids under, around and along both sides of the pipe and couplings are filled. Initial embedment material should be placed in the trench to a height sufficient to prevent floating of the pipe.

Caution: Be careful not to float pipe.

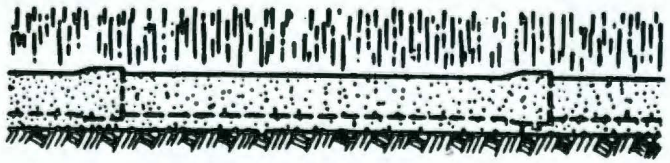

A. Right—Backfill correctly placed by hand filling all voids before water tamping.

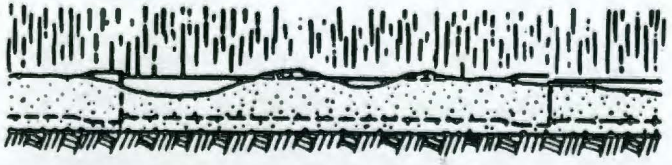

B. Wrong—Backfill not placed evenly.

Water-Jetting
The introduction of water under pressure to the embedment material, is not to be used to compact the embedment material of PVC pipe, or any other flexible conduit.

Placing Embedment Material and Haunching Area
After the pipe has been placed on the bedding material, the next step is providing effective support of the pipe in the haunching area. This is accomplished by tamping the embedment materials under the haunches and around the pipe to the springline of the pipe. Side support is accomplished by tamping the soil firmly under the haunches of the pipe out to the trench walls. Tamping should be done in 4 inch layers.

Hand-placing and tamping with flat tamper are continued to the height specified by the engineer, but in no case less than to the springline of the pipe. When the specified height is reached, the tamping can be stopped.

Completing Backfill
The trench should be carefully inspected before final backfilling to detect and remove any loose stones which may have fallen into the trench.

The material that completes the backfilling operation need not be as carefully selected as the initial backfill. It is usually placed in the trench by machine. Care should be taken, however, to avoid large stones in the backfill. They might damage the pipe when dropped, or when forced through the soil cushion of the initial backfill against the pipe.

The consolidation of the final backfill above the initial backfill material has no effect, except for weight, on flexible pipe performance. Therefore its placement and compaction should be completed in consideration of other factors such as paving. However, nothing should be done above the pipe zone that will alter the previously compacted backfill in the pipe zone.

Special Conditions and Considerations

A. Sheeting
When sheeting is used, it should be left in place unless it is designed to prevent disturbing the soil adjacent to the pipe when pulled and removed. If heavy wooden sheeting has to be pulled, well graded granular material should be placed on each side of the pipe for a distance of at least two pipe diameters. The granular material should be compacted to at least 90% Standard Proctor density.

Whenever possible, sheeting and bracing should be installed so that the bottom of the sheeting extends no lower than the spring line of the pipe. When installed in this manner, pulling the sheeting will not disturb the embedment material providing side wall support for the pipe. If a trench box is used, it should be disigned so that the back end of the box sides do not extend below the springline of the pipe.

79

9513334.0363

B. Frozen Backfill

1. Most soils have a tendency to adhere when frozen, becoming large lumps which can produce excessive impact on the pipe during the backfilling operation.

2. Frozen material has expanded and may produce excessive settlement in the trench backfill during the spring thaw.

3. Where the backfill material is extremely rocky, extra consideration should be given to the effects from frost because (1) freezing occurs more rapidly and (2) rocks become lodged in frozen lumps of backfill and these lumps can penetrate the soil cushion of the initial backfill over the pipe causing damage to the pipe.

C. Surface Loads

Where surface loads are anticipated over the trench, the final backfill must be compacted to a density consistent with those surface loads to be encountered. Therefore, the placement of the final backfill should be under the direction of the engineer.

D. Deep Sewer Chimney or Risers

These appurtenences necessitate extra care during the final backfilling to prevent damage to the piping from impact caused by the falling backfill material. Final backfilling around sewer chimneys should be under the direction of the engineer.

Anchorage of Pipe on Slopes

Anchors on slopes are needed only when there is the possibility of backfill slipping downhill and carrying the pipe with it. Usually, well drained soil, carefully tamped in 4 inch layers up to the top of the trench, will not slide and pipe anchors will not be required, however, if PVC Sewer Pipe is to be installed on slopes greater than 20 degrees, precautions should be taken such as a special backfill material, or it may be necessary to lay the pipe bells uphill and the pipes anchored as designed by the engineer.

Support of Above-Ground Pipe

The installation of Ring-Tite PVC gravity sewer pipe above-ground requires continuous support except at the joints where the support should be removed to allow clearance for the pipe bells. Pipe above-ground should be protected from sun light and vandalism as far as possible.

Fittings and Adaptors

The primary purpose of sewer pipe fittings is to accommodate house sewer connections. J-M PVC Sewer Pipe fittings assure tight, durable connections to the sewer pipe line. Each Tee and Wye has all bell outlets to facilitate quick and easy assembly in the field. Elbows are either bell by spigot or bell by bell as required for alternate connections.

Current Fitting Line

The J-M PVC fitting line consists of injection molded fittings, saddles, and fabricated fittings. Injection molded sewer fittings are available in sizes 4", 6" and 8". Injection molded sewer saddles with 4" and 6" outlets are available in sizes 6" through 15". All 10", 12", and 15" sewer fittings are fabricated.

Caution: The factory stop marks on the spigot pipe ends are for assembly into pipe bells only. Injection molded PVC fitting bells have lesser depths that pipe bells. Therefore, when assembling spigot ends with factory stop marks into the bells of injection molded fittings, care should be taken not to insert the spigot ends all the way to the assembly stop marks. This would cause an over assembled condition which might cause fitting failures and/or erroneous deflection readings if measurements are taken.

1. When assembling spigot pipe ends with factory stop marks into the bells of injection molded fittings, insert the pipe spigot so that the stop marks are the following distances from the ends of the fitting bells.

4"	50"
6"	50"
8"	35"

9513334.0364

9513334.0365

SIPHONS

9513334.0366

Bulletin 315-361
2M — 9/85

PFT STANDARD SEWAGE SIPHONS

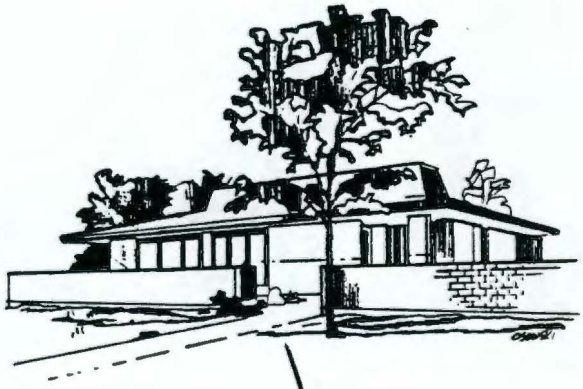

for SMALL DISPOSAL PLANTS

Including SETTING and OPERATING Instructions

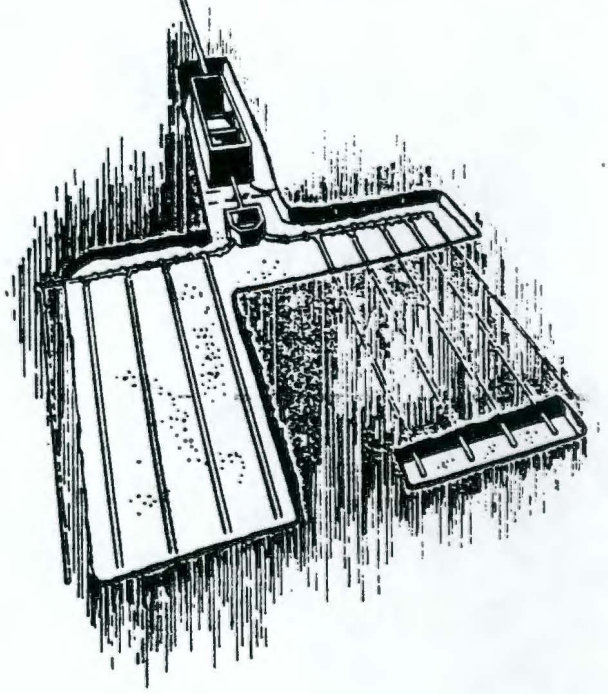

Envirex

9513334.0367

P. F. T. STANDARD SEWAGE SIPHONS for SMALL DISPOSAL PLANTS

It frequently happens that a system of sewers is not available in which to empty the sewage from rural residences, schools, trailer and public parks, etc., and under such circumstances it is necessary to construct some type of sewage treatment plant which will conveniently and satisfactorily produce an effluent which when discharged into a small creek or stream will not create a nuisance. Ordinarily the design of plants for the treatment of sewage involves an engineering problem which should be handled by someone familiar with the best practice in that field, but for the small installations now under consideration, the employment of an engineer to prepare plans, specifications, etc., is generally eliminated because of the cost. However, a plant of this kind should be designed and constructed with regard to practices which have been found satisfactory in years of use.

All states have regulations governing the design and construction of sewage treatment plants. We do not design nor furnish plans for work of this kind, but descriptive bulletins can be obtained from most of the State Boards of Health, the United States Department of Agriculture and the United States Public Health Service. There are also many local reliable companies who make a business of furnishing complete plans and specifications and some of the materials required in the work. Plans should be approved by State Regulatory Agencies before construction.

Owing to the conditions under which this type of plant generally operates, it is desirable that the results sought be obtained with the least possible complications and at a minimum cost. Many years of experience indicate that when conditions are favorable the so-called sub-soil irrigation type of installation is probably the best method. It is economical, efficient and requires the least amount of attention. Regardless of whether the sub-soil irrigation method is used for a secondary treatment or whether a small filter bed is constructed, it is necessary to provide some preliminary form of treatment, such as a settling or septic tank. A combination grease and grit trap should be provided for kitchen and laundry wastes ahead of the septic tank. The sewage from the house is delivered into the settling tank, which should be of proper size and design, the purpose of the tank being to permit the settling out and partial digestion of the solid matters contained in the sewage, and every tank design should provide baffles or other means for preventing the solids from leaving the settling tank.

The liquid should pass on to a second compartment that is called a dosing tank, and in this tank there should be located a MILLER SIPHON of proper size and drawing depth to intermittently discharge the contents of the dosing tank into the sub-soil tile or whatever secondary type of treatment is used. It is not desirable to permit the sewage to flow directly from the settling tank to the sub-soil tile. If it does, the filtering material surrounding the tile will be constantly saturated closest to the settling tank and eventually will become clogged and foul. The intermittent discharge permits the filtering materials to be completely dosed with a rest interval following after each application of sewage thus prolonging the usefulness and efficiency of the system.

The discharge from a dosing tank assures completely filling the sub-soil tile, thus insuring that every part of the irrigation field will be utilized effectively.

The results outlined and which are quite essential to the proper operation of the plant are best obtained by using one of our STANDARD SEWAGE SIPHONS as illustrated on page 3. These siphons are made in several sizes. The drawing depths shown in the tables are standard and cannot be increased, they can, however, be reduced within certain limits.

The size and drawing depth of the siphon selected will depend upon the fall available and the amount of sewage to be treated. We recommend sizes as follows for plants serving:

5 to 15 persons, use 3-inch siphon.
16 to 40 persons, use 4-inch siphon.
41 to 100 persons, use 5-inch siphon.
101 to 200 persons, use 6-inch siphon.

The cut on page 4 shows a suggested arrangement for a small plant, and we call attention to the vent leading from the discharge pipe back into the dosing tank at a point above the siphon discharge line. This vent is required for the proper operation of the siphon. Alternately, the siphon can be located farther back in the dosing tank, placing a tee at the discharge head and then raising a straight piece of pipe up from the tee outlet inside the dosing tank to a point 3 inches or 4 inches above the discharge line.

9513334.0368

THE MILLER

3", 4", 5", 6", 8" Standard Design Single Sewage Siphons

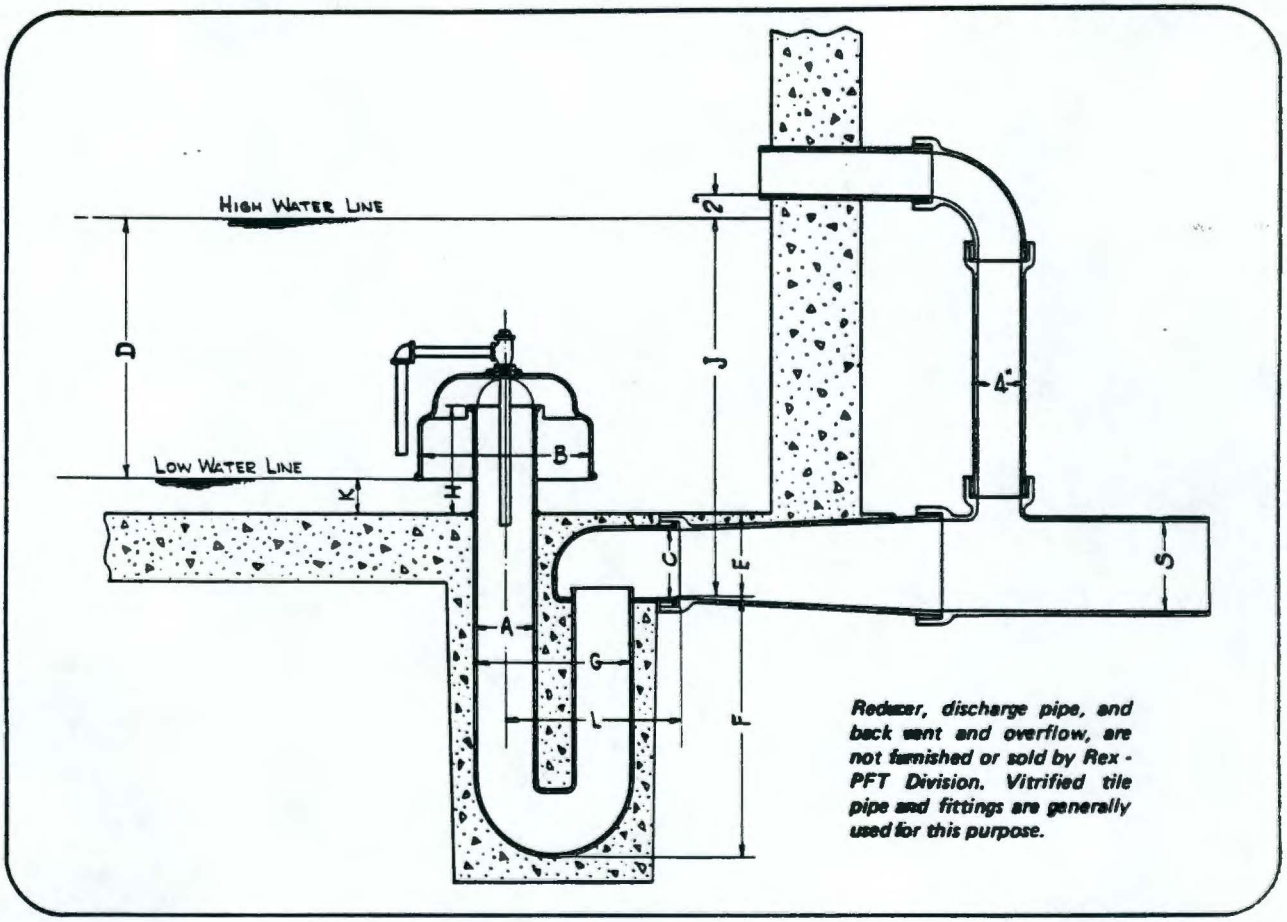

Approximate Dimensions in Inches and Average Weights in Pounds

Diameter of Siphon	A	3	4	5	6	8
Drawing Depth	D	13	17	23	30	35
Diameter of Discharge Head	C	4	4	6	8	8
Diameter of Bell	B	10	12	15	19	21
Invert Below Floor	E	4¼	5½	7½	10	9
Depth of Trap	F	13	14¼	23	30¼	40
Width of Trap	G	8-3/8	11	14	16	25-5/8
Height Above Floor	H	7¼	11-3/4	9½	11	16
Invert to Discharge=D+E+K	J	20	25½	33½	44	47
Bottom of Bell to Floor	K	3	3	3	4	3
Center of Trap to End of Discharge Ell	L	12½	14½	17	19	25
Diameter of Carrier	S	4	4–6	6–8	8–10	8–12
Average Discharge Rate G.P.M	...	72	165	328	474	950
Maximum Discharge Rate G.P.M.	...	96	227	422	604	1400
Minimum Discharge Rate G.P.M.	...	48	102	234	340	500
Shipping Weight in Pounds	...	60	150	210	300	800
Detail Drawing 1F	...	373	374.2	375	376	378.2A

Note:—Two single Siphons of this type set side by side in the same tank will alternate. See page 4 for discription of operation. The draft "D" will be 1" to 2" less in this case. Siphons listed here are carried in stock and can be shipped promptly on receipt of order and payment. The drawing depth "D" may be reduced in certain cases by special air piping. Contact the manufacturer for these special applications.

9513334.0369

SETTING and OPERATING INSTRUCTIONS for MILLER STANDARD SINGLE and DOUBLE ALTERNATING SIPHONS

Single Siphon Installation

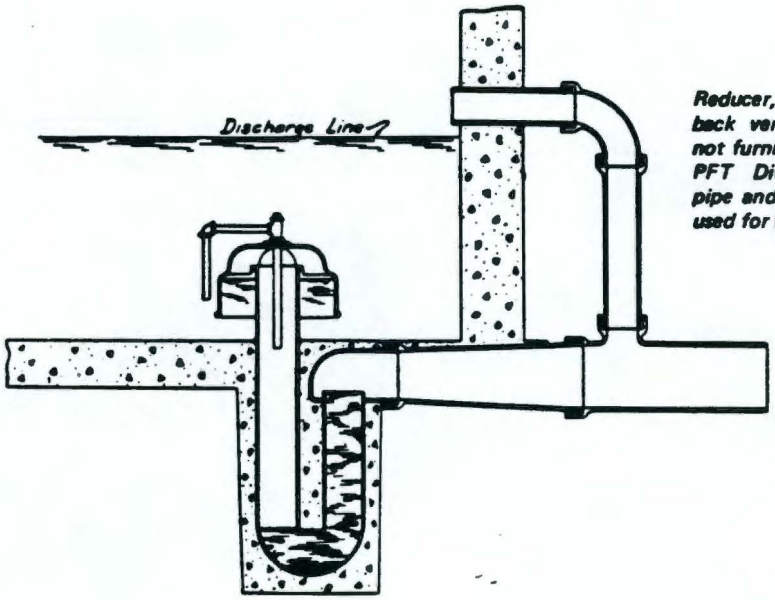

Reducer, discharge pipe, and back vent and overflow, are not furnished or sold by Rex - PFT Division. Vitrified tile pipe and fittings are generally used for this purpose.

It is important that the siphon be installed in accordance with the plans furnished and all dimensions and elevations should be carefully followed. No changes should be made without first communicating with us.

First set the main trap in the concrete, being sure that it is plumb and that the long leg projects the correct distance above the floor of the dosing tank as shown on the print.

Next screw auxiliary vent piping in the bell. Pipe compound should be used and the joints tightly made up.

Next place the bell over the long leg of the trap, supporting the bell on the lugs cast in the bell.

To Start Siphon

Fill the main trap with water.

How it Operates

The action of the Miller Siphon is as follows: as the sewage entering the tank rises above the open end of the auxiliary vent pipe in the bell it effects an air seal because the trap is filled with water. As the sewage level in the tank rises the confined air gradually forces the water out of the long leg of the trap, until a point is reached when the air just endeavors to escape around the lower bend. Now as the difference of water level in the two legs of the trap equals the difference of the levels between the sewage in the tank and the sewage within the bell, it will be seen that the column of sewage in the short discharge leg has practically the same depth as the head of water in the tank above the level at which it stands in the bell. The two columns of water therefore counterbalance each other at a certain fixed depth in the

9513334.0370

tank. As soon as this depth is increased by a further supply, however small, a portion of the confined air is forced around the lower bend, and by its upward rush carries with it some of the water in the short leg, thus upsetting the equilibrium and the siphon is brought into full action immediately. The sewage is then drawn out of the tank to the bottom of the bell, the siphon is stopped by drawing air under the bell, and completely vented by the admission of air through the auxiliary vent and the operation repeated.

Testing

When the water has filled the dosing tank to a point which covers the bell and the piping connections, a close observation of the water surface should be made to detect any bubbles rising to the surface which would indicate an air leak. If any are found, either in the piping or bell casting, they should be fixed.

The discharge line leading from the siphon to the tile field or filter bed must be larger in diameter and have a slight fall or pitch away from the siphon. This is necessary in order to prevent backing up and causing sewage to stand over and submerge the projection of the short leg of the trap in the discharge elbow.

The discharge line from the siphon should be vented back into the dosing tank as shown.

Double Alternating Siphons Installation

First set the two main traps in concrete, being sure that they are plumb and that the long legs project the same distance above the floor as shown on the print.

Next screw auxiliary vent piping in the bells. Pipe compound should be used and the joints tightly made up.

Next place the bells over the long leg of the traps, supporting the bells on the lugs cast in the bells.

To Start Siphons

Fill the main traps of both siphons with water.

Operation

The main traps having been filled, the water levels will be at A in both traps, See Figure 1. The inflow is then turned on and the dosing tank allowed to fill. When the water level in the tank reaches the end of the

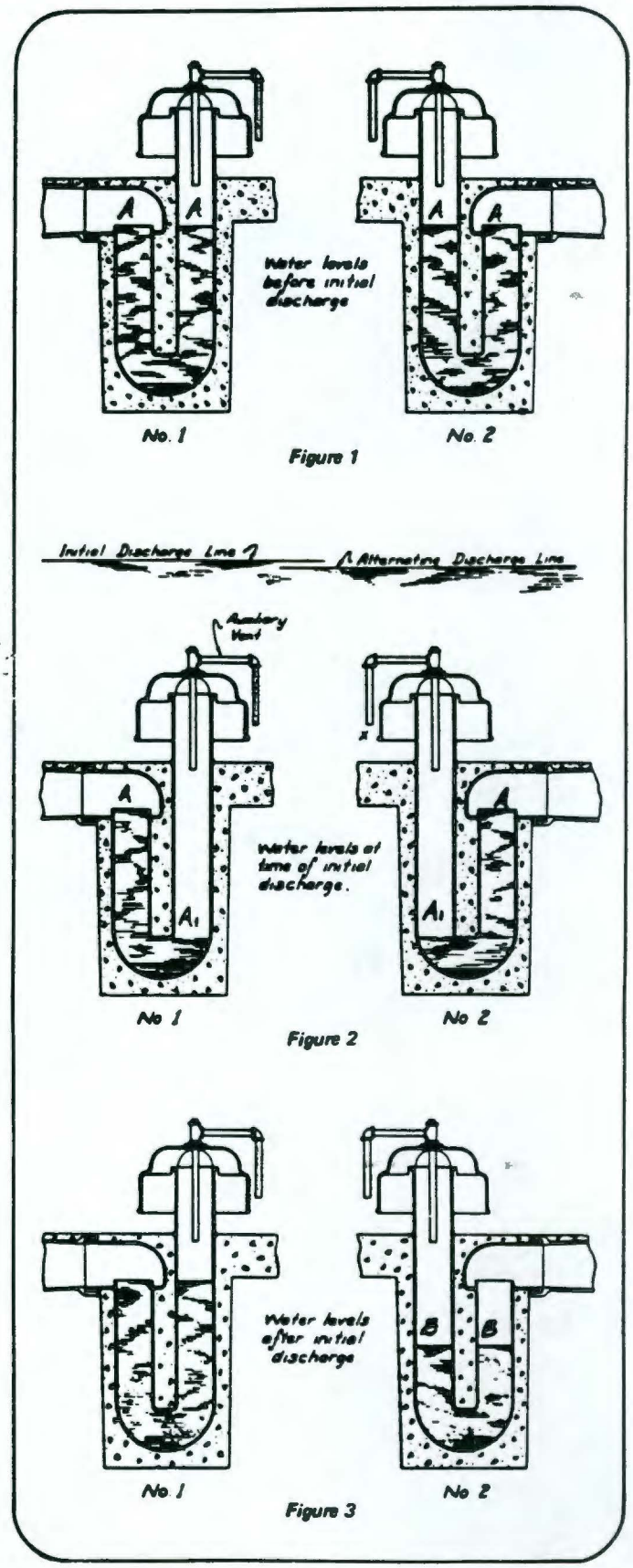

9513334.0371

auxiliary vent pipe at X the Air within the siphons is confined and put under pressure which gradually increases as the water in the tank rises. This pressure forces the water in the long legs of both traps down and when the discharge line in the tank is reached the levels in the main traps will be at A and A1, Figure 2. At this point the actual pressure within the siphon is equal to the depth of the main trap. The action at this point is the same as described under single siphons. If both siphons were constructed and set perfectly they would both be brought into operation at the same time but any slight variation in the liquid levels, which invariably occur will be sufficient to bring one siphon into operation in advance of the other. For this explanation we assume that siphon No. 1 operates first.

The above explanation applies to the first discharge, and subsequent discharges will take place under somewhat different conditions.

It was stated that the pressure forced the water in the long legs down to points A and A1. It will now be seen that as siphon No. 1 empties the tank, the pressure on siphon No. 2 (or idle siphon) is released and when the end of the auxiliary vent X is reached, atmospheric pressure is restored in that siphon. This release of pressure permits the water level in the short leg of siphon No. 2 to fall back to a natural level. But about half of the water had been forced out of the trap on the upward rise and therefore when it falls back the levels in the idle trap will be at B, Figure 3. Siphon No. 1 having just operated will be left with a full trap.

It will now be noted that there is a greater quantity of air trapped in the long leg of the siphon which did not discharge. Due to compression of this extra air a bubble will be forced around this bend in the siphon first thus causing the alternating operation.

On the third filling the conditions will be reversed and No. 1 will have the excess air.

No connecting piping or other devices are required to bring about this alternating feature and if the siphons are set exactly in accordance with our drawing, no trouble should be experienced.

Testing

On the first operation the siphon will discharge at a point slightly above the normal alternating discharge level.

When the bells and auxiliary vents are covered with water a close observation of the surface should be made to detect any bubbles rising to the surface which would indicate an air leak. If any are found either in the piping or bell casting they should be fixed, as the siphons will not operate properly if there is a leak.

If there are no leaks and if the tops of the long legs of the siphon are at the same elevation and the siphons still do not alternate, it is probably due to the refilling of the idle trap while the other siphon operates.

This could take place through a leak in the floor where the outlet pipe is joined to the discharge head of the siphon trap. Do not discharge both siphons into a single manhole or tile field because this would permit the discharge from one siphon backing up and refilling the trap of the idle siphon.

In order to determine whether the idle trap has been refilled, remove both bells and measure down from the top of the long leg to the surface of water in the traps. The difference in the two traps should be as shown in the illustration at the bottom of page 5.

A continuous tight line a size larger than the siphon should be run from each siphon to its bed, with proper provision for venting these lines as previously noted.

9513334.0372

Envirex

1901 S. Prairie Ave.
Waukesha, Wisconsin 53186
414/547-0141

Envirex processes and equipment are protected by patents issued and pending in the U.S.A. and other countries.

Printed in U.S.A.

9513334.0373

TROUBLESHOOTING GUIDE FOR SIPHONS IN DOSING TANKS

MANUAL .408

.408/3-83

ERECTOR NOTE

It is imperative that Siphon Bells and/or Seal Cups (Compressor Cups) be installed "dead" level and well supported if they are to function properly. This is a critical requirement of any siphon installation.

THIS MANUAL IS NOT TO BE USED TO LOCATE THE ORIGIN OF PROBLEMS IN TWIN DOSING TANKS.

9513334.0375

PFT SIPHONS - DOUBLE ALTERNATING STANDARD SEWAGE

SIPHON FAILS TO START IN INITIAL OPERATION

PROBABLE CAUSES

Main traps not filled with water before admitting water to dosing tank.

Air piping not properly installed or air leak in piping or siphon bell. (For reduced draft standard sewage type siphon, the top of blow-off trap pipe inside the siphon bell may not be the required 1" above top of long legs).

Overflow from dosing tank set too low. (Particularly with double alternating siphon).

Discharge line plugged beyond siphon or sloped upgrade from siphon.

SIPHON FAILS TO START SUBSEQUENT TO PROPER OPERATION

PROBABLE CAUSES

Sand bed or tile field flooded.

Vent pipe plugged.

Increased inflow entrains air under siphon bell.

SIPHON(S) FAILS TO STOP IN INITIAL OPERATION

PROBABLE CAUSES

Fails to draw down to low water level because inflow to dosing tank is greater than capacity of siphon and connecting piping, (and nozzles in case of fixed nozzle bed).

Vent pipe inside siphon bell is missing.

Draws to low water level but continues to run; vent pipe inside siphon bell is too long.

9513334.0376

PFT SIPHONS - DOUBLE ALTERNATING STANDARD SEWAGE

SIPHON(S) FAILS TO STOP SUBSEQUENT TO PROPER OPERATION

PROBABLE CAUSES

Fails to draw down to low water level because inflow to dosing tank is greater than capacity of siphon and connecting piping, (and nozzles in case of fixed nozzle bed).

Vent pipe plugged up.

SIPHON FAILS TO ALTERNATE IN INITIAL OPERATION

PROBABLE CAUSES

Traps and/or vent pipes not at same elevation.

Cross flow between discharge lines or stoppage in one discharge line.

SIPHON FAILS TO ALTERNATE SUBSEQUENT TO PROPER OPERATION

PROBABLE CAUSES

Cross flow between discharge lines or stoppage in one discharge line.

One sand bed flooded.

Vent pipe elevations no longer identical, (physically disturbed by maintenance work?).

9513334.0377

DRAINFIELD CONTROL VALVES

RESILIENT WEDGE VALVES

CLOW VALVE COMPANY

CLOW AWWA Resilient Wedge Gate Valves Meet or Exceed the Requirements of AWWA Standard C509

Size Range	Water Working Pressure psi	Bubble-Tight Test psi	Hydrostatic Shell Test psi
2"-12"	200	200	400

Available in either non-rising stem, outside screw & yoke or sliding stem.

Available End Connections & Size Range		Figure No.
Flg. End (NRS)	2" - 12"	F-6102
M.J.	2" - 12" (except 2 1/2")	F-6100
A-C (Asbestos Cement)	4" - 12"	F-6104
Flg. & M.J.	3" - 12"	F-6106
Flg. & A.C.	4" - 12"	F-6108
Push-on for PVC (SDR)	2" - 8"	F-6110
Flg. End (OS & Y)	2 1/2" - 12"	F-6136
M.J. for Tapping	4" - 12"	F-6114
A.C. for Tapping	4" - 8"	F-6116
Push-on for C.I. & C900 PVC	4" - 12"	F-6112
M.J. Cutting-in	4" - 10"	F-6111
Push-on C.I. X Flg.	4" - 12"	F-6113
Threaded	2" - 3"	F-6103
Push on for C.I. For Tapping	4" - 8"	F-6115

Accessories (ILLUSTRATED IN THE GATE VALVE SECTION)

Indicator Posts
Limit Switches
"T" Handles
Stem Guides
Electric Motor with Extension Stems
2" Sq. Operating Nuts
Handwheels
Extension Stems
Floor Boxes
Chain Wheels
Floorstands (non-rising stem & rising stem)

9513334.0379

2" - 12" R/W VALVE FLANGED ENDS GENERAL DIMENSION LAYOUT

CLOW VALVE COMPANY

F-6102

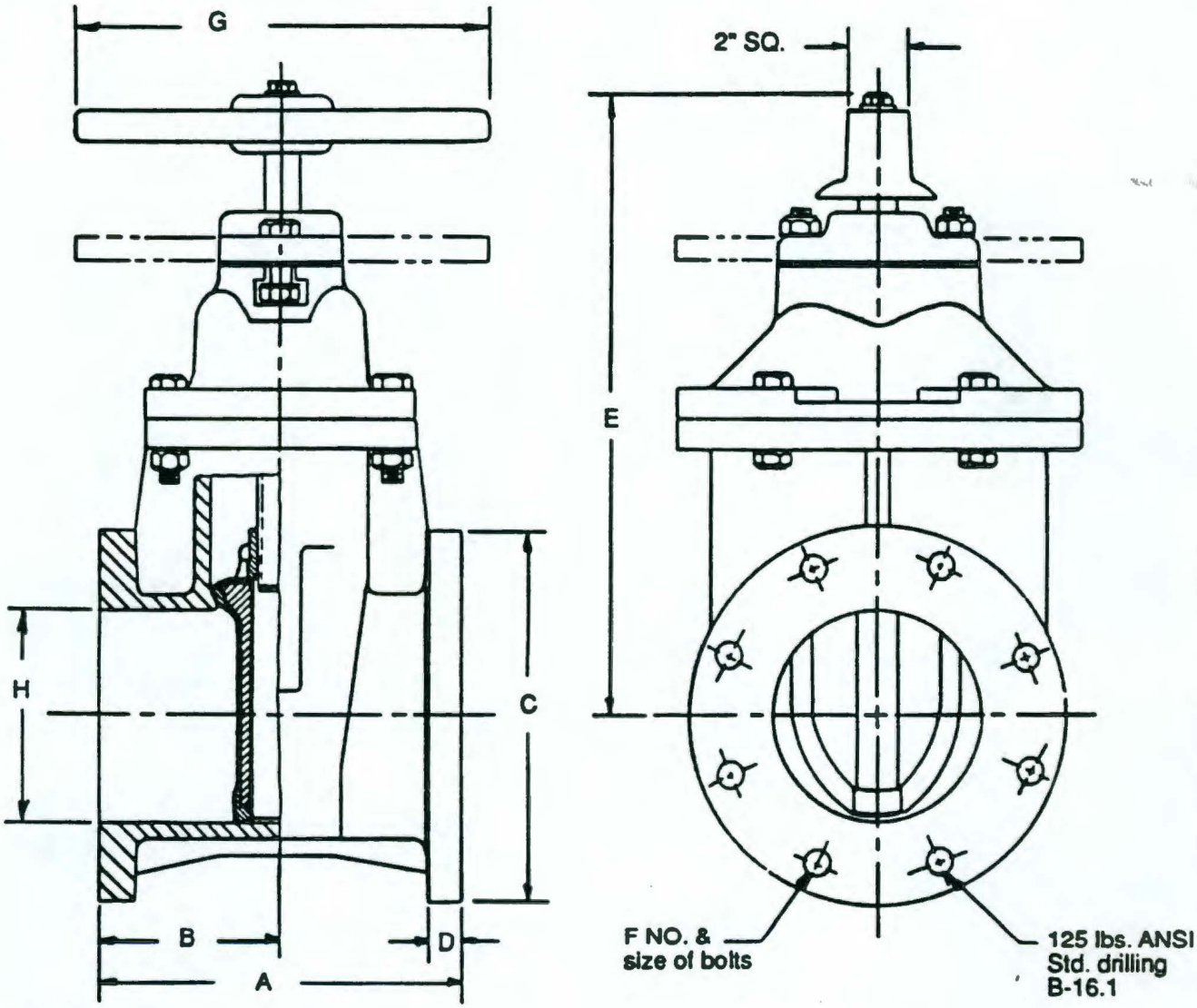

VALVE SIZE	A	B	C	D	E	F	G	H
2	7	3-1/2	6	5/8	10-7/8	4-5/8	7-1/4	2
2-1/2	7-1/2	3-3/4	7	11/16	11-3/8	4-5/8	7-1/4	2-1/2
3	8	4	7-1/2	3/4	12-3/8	4-5/8	10	3
4	9	4-1/.2	9	15/16	14-3/4	8-5/8	10	4-1/4
6	10-1/2	5-1/4	11	1	19	8-3/4	12	6-1/4
8	11-1/2	5-3/4	13-1/2	1-1/8	22-1/2	8-3/4	14	8-1/4
10	13	6-1/2	16	1-3/16	26-1/2	12-7/8	18	10-1/4
12	14	7	19	1-1/4	30	12-7/8	18	12-1/4

RESILIENT SEAT GATE VALVE
1986 DESIGN NRS
ASSEMBLY - EXPLOSION

CLOW VALVE COMPANY

DET.	QTY.	DESCRIPTION	MATERIAL
R-1	1	Hold Down Hex Bolt	Zinc Plated Steel
R-2	1	Hold Down Bolt Washer	Zinc Plated Steel
R-3	1	Sq. Operating Nut OR Handwheel (Not Shown)	Cast Iron
R-4	2	Follower Plate Bolt & Nut	Zinc Plated
R-5	1	Follower Plate	Cash Iron
R-6	3	Stem O-Ring	NBR
R-7	1	Follower Plate O-Ring	NBR
R-8	1	Thrust Washer (Sizes 2" - 2'1/2")	
	2	Thrust Washer (Sizes 3" thru 12")	Delrin
R-9	1	Stem	Bronze
R-10	4	Cover Bolts & Nuts (Sizes 2" thru 6")	Zinc Plated
	8	Cover Bolts & Nuts (Sizes 8" thru 12")	Zinc Plated
R-11	1	Cover	Cast Iron
R-12	1	Stem Nut	Bronze
R-13	1	Wedge	Cast Iron & Urethane Rubber
R-14	1	Cover O-Ring	NBR
R-15	1	Body	Cast Iron

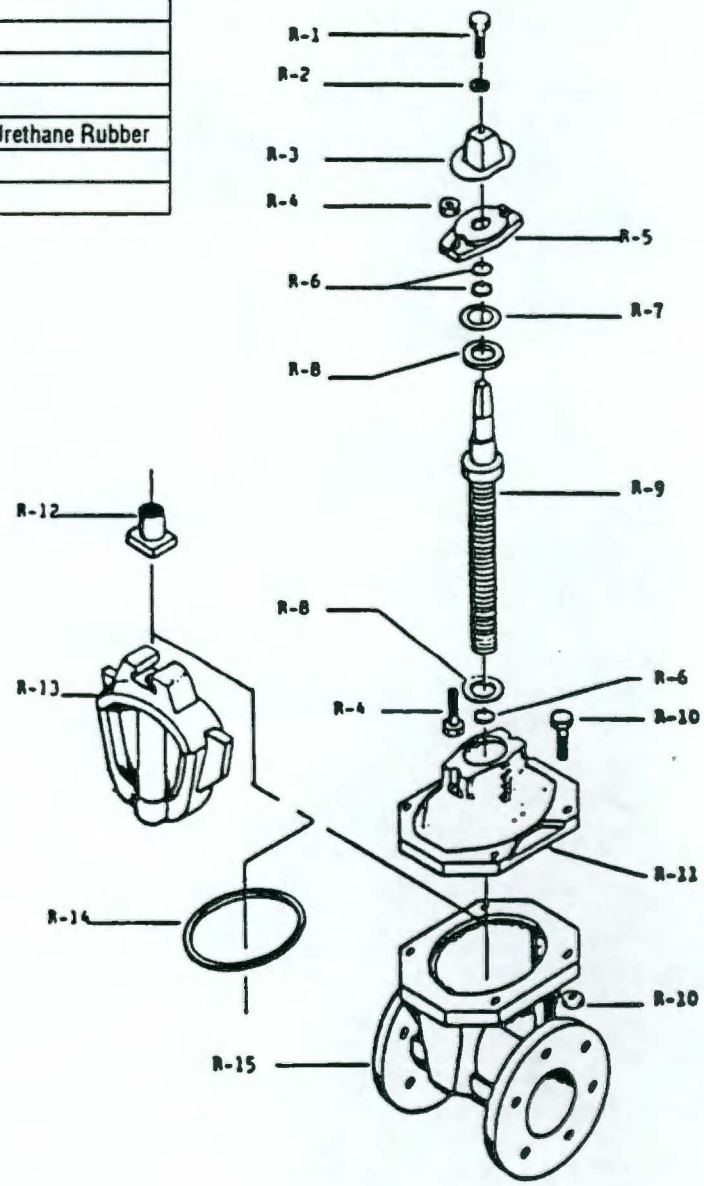

9513334.0381

RESILIENT SEAT GATE VALVE
N.R.S. ASSEMBLY

CLOW VALVE COMPANY

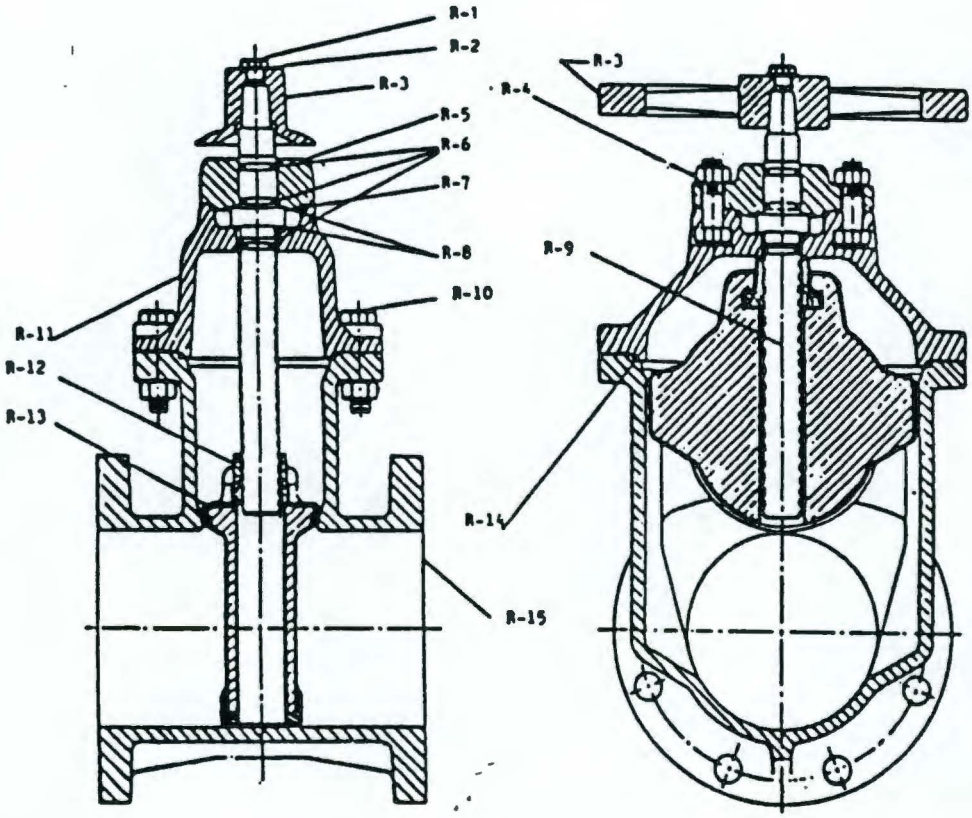

DET.	NAME OF PART		MATERIAL	ASTM SPEC.
R-1	Hex Head Bolts		Zinc Plated Steel	ASTM A307 Grade B
R-2	Flat Washers		Zinc Plated Steel	ASTM A307 Grade B
R-3	Operating Nut		Cast Iron	ASTM A126 Class B
	Handwheel		Cast Iron	ASTM A126 Class B
R-4	Hex. Bolt & Nut		Zinc Plated Steel	ASTM A307 Grade B
R-5	O-Ring Following Plate	2" thru 8"	Cast Iron	ASTM A126 Class B
		10" and 12"	Ductile Iron	ASTM A536 Gr. 65-45-10
R-6	Stem O'ring		Buna - N	----------
R-7	Follower Plate O'Ring		Buna - N	----------
R-8	Thrust Washer		Delrin	----------
R-9	Stem		Manganeze Bronze	ASTM B584 CDA 867
R-10	Hex. Head Cover Bolts & Nuts		Zinc Plated Steel	ASTM A307 Grade B
R-11	Cover		Cast Iron	ASTM A126 Class B
R-12	Stem Nut		Bronze (Low Zinc)	ASTM B584 CDA 844
R-13	Wedge		C.I. Urethane Molded Wedge	ASTM A126 Class B
R-14	Cover O'Ring		Buna-N	----------
R-15	Body (All Types)		Cast Iron	ASTM A126 Class B

9513334.0382

DRAINFIELD DOSE COUNTERS, VENT (ODOR) FILTERS, AND EFFLUENT FILTERS

9513334.0383

RED LION CONTROLS

INTERNATIONAL HEADQUARTERS
[illegible] Willow Springs Circle, RD 5, York, Pa. 17402 (717) 767-6511 FAX: 717-764-0839
EUROPEAN HEADQUARTERS
[illegible] Plymouth Road, Slough, Berkshire SL1 4LP ENGLAND 011-753-[illegible] FAX: 011-753-[illegible]

MODEL CUB3 & CUB3R - GENERAL PURPOSE, MINIATURE ELECTRONIC COUNTERS ECONOMICAL REPLACEMENT FOR ELECTRO-MECHANICAL COUNTERS

- *IDEAL FOR PORTABLE, MOBILE, OR STATIONARY INDUSTRIAL APPLICATIONS*
- *AVAILABLE IN TWO VERSIONS: FRONT PANEL RESET OR REMOTE RESET*
- *LOW COST/HIGH PERFORMANCE*
- *OPERATES FROM SWITCH CONTACT OR NPN OPEN COLLECTOR INPUTS*
- *PROVIDES YEARS OF SILENT OPERATION WITHOUT MECHANICAL WEAR*
- *SELF POWERED, 2-WIRE CONNECTION, ELIMINATES POWER WIRING*
- *EASY SNAP-IN MOUNTING IN 1" X 2" (25mm x 50mm) PANEL OPENING*

DESCRIPTION

The CUB 3's are state-of-the-art products of Micro-Electronic technology. It not only obsoletes older electro-mechanical devices, but it also opens up a wide variety of new application possibilities that, until now, were economically impractical.

Application of the CUB 3's are simplicity itself. Its rugged reinforced nylon case snap-fits into a standard rectangular opening without screws or other hardware. Hook-up is simply a matter of connecting two wires, and since the operating voltage is only 3V and with currents in microamps, almost any kind of wire can be used. No external power is required since the internal batteries provide years of uninterruptible service. In addition to these advantages, the CUB 3's offer the inherent ruggedness, reliability, and permanence of completely integrated circuitry, embedded in a single monolithic, silicon, microchip.

SPECIFICATIONS

1. **DISPLAY:** 6-Digit, LCD, 0.2" *(5.1mm)* High.
2. **POWER:** 3 Volts supplied by 2 replaceable Alkaline "N" Cells. Nominal battery life 4 years.
3. **RESET:**
   CUB 3 - Via front panel reset button only.
   CUB 3R - *(Remote Reset Only)* Switch Contact or Solid State Transistor Switch *(See Connections, right)*. Contact burden 14uA; Max. OFF-State leakage 2uA @ 3V. Counter resets with negative pulse with a minimum pulse width of 5msec.
4. **COUNT INPUT:** Switch Contact or Solid-State Transistor Switch *(See Connections, right)*. Contact burden 14uA; Max. OFF-State leakage 2uA @ 3V. Counter increments on negative going edge of input.
5. **COUNT SPEED:** 100 counts/sec *(6000 counts/min)*. Min. input pulse width 5msec, with 5msec spacing between count pulses.
6. **OPERATING TEMPERATURE RANGE:** 0° to 50°C
7. **WEIGHT:** 3oz. (85g) *[Less Batteries]*

ELECTRICAL CONNECTIONS & COUNT INPUTS

The CUB 3's can be supplied with count input signals from mechanical switch contacts or solid-state switches *(NPN or PNP transistors)* as shown in the diagrams at right. Reed switches, mercury-wetted contacts, snap-action limit switches, and silver alloy contacts with wiping action are usually satisfactory choices for mechanical switch input. Heavy *"clapper-type"* contacts such as used in contactors or large machine tool relays, tungsten contacts, or brush type contacts are not recommended as count input devices.

Count input signal leads can be almost any type of electrical wiring and can be run in very long lengths. Heavy internal *"debounce"* filtering inside the CUB 3's provide a high degree of noise immunity. However in extremely high electrical noise environments twisted-pair wiring, or single conductor coax *(microphone cable or phono pickup wire)* may be used if required. Count input leads should never be run in conduits, wiring troughs, or cable bundles with heavy power wiring.

ORDERING INFORMATION

MODEL NO.	DESCRIPTION	PART NUMBER
CUB3	CUB3 (Front Panel Reset Only)	CUB30000
CUB3R	CUB3 (Remote Reset Only)	CUB3R000
BNA	1.5V Alkaline "N" Cells (2 Req'd)	BNA00000

NOTE: Batteries not supplied with counter, order separately.

DIMENSIONS In Inches (mm), INSTALLATION & BATTERY INSERTION

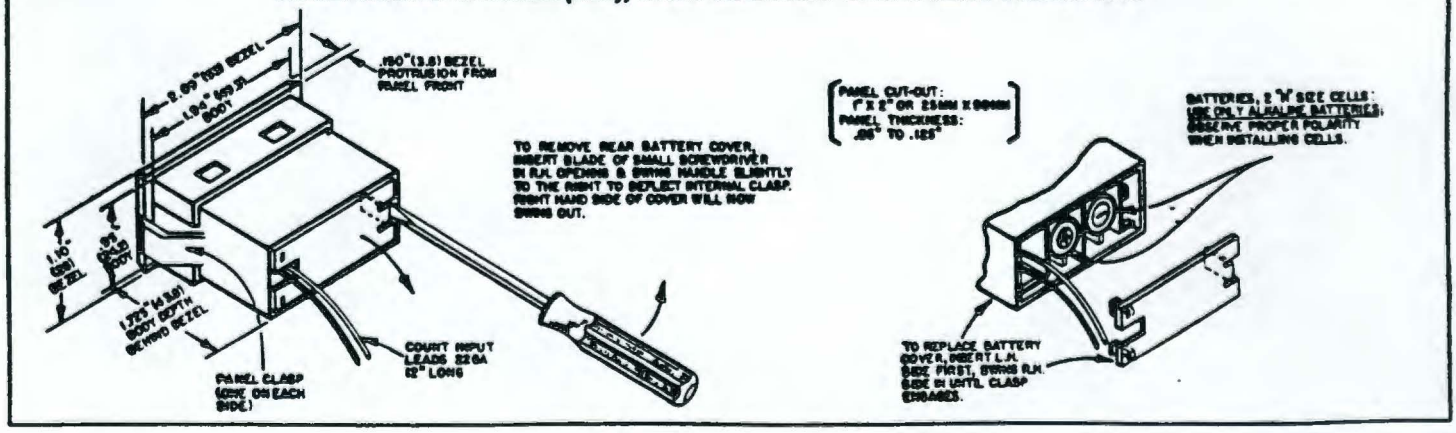

Orenco Systems™

SIPHON SITTER II

Drainfield Model

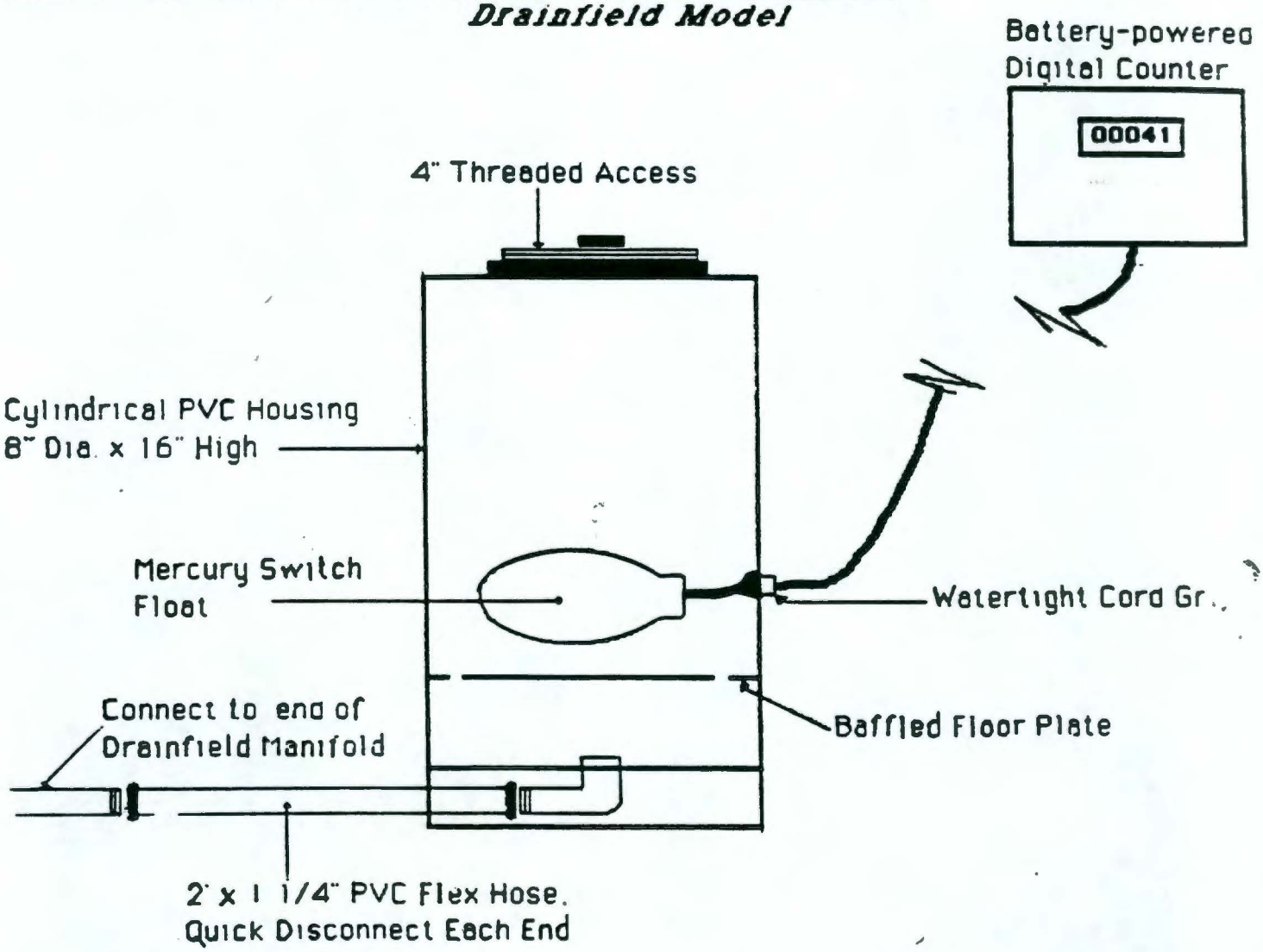

When the drainfield is dosed, the liquid level rises in the cylinder and lifts the float switch, which activates the battery-powered digital counter.

A SURE-FIRE MEANS OF MONITORING SINGLE OR ALTERNATING SIPHONS!

Orenco Systems, Inc. Roseburg, OR 97470 503/673-0165

ORENCO SYSTEMS, INC.
2826 Colonial Road Roseburg, OR 97470
503 673-0165

ACTIVATED - CARBON AIR FILTERS

For use on buildings connected to septic tanks.

Connects to house vent on roof of building.

Eliminates odors leaving septic tank through roof vent.

FEATURES:

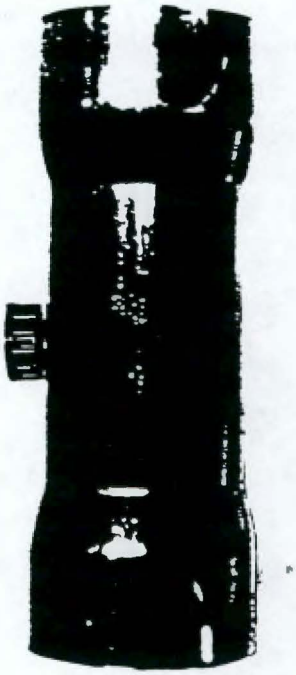

*Fits 3 and 4 inch iron pipe size
(adapters available for smaller sizes)

*Activated carbon sized for optimum odor removal.

*Refillable (depending on use, carbon's effective life will be one or more years.)

*Replacement carbon available at nominal charge.

*Prevents disease-carrying vectors from leaving septic tank.

*Attractive black ABS case.
(12 inches long by 3.5 inches diameter.)

© 1/11/90. Orenco Systems Inc.

The activated carbon air (odor) filters, described on page 101, are mounted aboveground on the septic tank structure's air vent piping. For servicing, a filter is removed from its vent pipe by unscrewing it and transporting to a shop or to a lay-down area on top of, or near, the septic tank structure. For replacement of the carbon filter element, an access port is located in the side of the filter body. The replacement filter's manufacturer's instructions, which are furnished with the replacement filter material, provide the proper procedures for the removal of the old material and the installation of the replacement material.

The following information describes the features of the Orenco Systems, Inc., Effluent Filters that are used inside the HWVP septic tank structure.

9513334.0387

© OSI, December 1988

ORENCO SYSTEMS™

Effluent Filter

the Concept & the Application

The **OSI Effluent Filter*** *is a device for improving the quality of the effluent produced by a septic tank by (a) modulating the flow and (b) preventing gross solids from leaving the tank.* Constructed entirely of corrosion-proof components, the OSI Effluent Filter is simple to install and is easily removable for seldom-required maintenance. It consists of an intake pipe within a screened vault, connected to the tank's discharge by a flexible hose.

The concept is simple. Effluent from the relatively clear zone of the septic tank, between the sludge and scum layers, enters the Effluent Filter through its influent holes. As effluent surrounds the 1/8-inch mesh screen, particles larger than 1/8 of an inch are trapped in the annular space between the vault and screen. Once it has been filtered through the screen, effluent passes through the flow-modulating orifice at the base of the intake pipe and exits the tank through the discharge hose.

If inflow should become temporarily excessive (e.g. from a broken flush valve in the home or as a result of leaks), the fluid level in the tank and Effluent Filter will rise and effluent may enter the screened top of the intake pipe then flow out the discharge hose. The Effluent Filter continues to operate, maintaining filtration, as the problem is being corrected. An alarm with a sensor float to attach at the top of the intake pipe is available from OSI to serve as a warning that either the inflow is excessive or the screen is plugged.

While an OSI Effluent Filter seldom needs cleaning any more frequently than a septic tank requires pumping (usually at ten-year intervals in properly designed and operated systems), accidental overloading may occasionally cause premature plugging of the screen. But that should be considered a success, not a failure, since the screen serves to protect the integrity of the collection and treatment facilities. Cleaning a screen is quick and easy and infinitely preferable to dealing with the damage that solids carryover can cause downstream in a system. Furthermore, the screen permits identification of a problem at its source where abuse can be nipped in the bud.

To clean the screen, lift the entire Effluent Filter from the tank. A flap check valve in the bottom of the Filter allows it to drain. Remove the support pipes and slide the screen out of the vault by pulling on the two plastic straps attached to the top of the screen. Hose down the screen and vault so that the debris falls back into the septic tank and does not wash into the unscreened vault. Replace the screen in the Effluent Filter vault, insert the support pipes and slip it back in the tank. That's all there is to it!

*OSI Effluent Filter is covered by U.S. Method of Use Patent No. 4,439,323.

Screened Vault

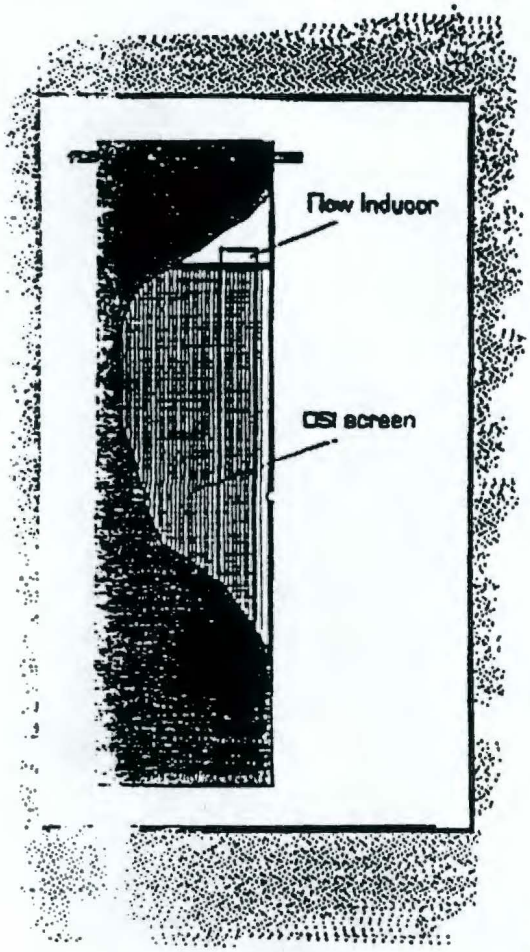

The Orenco Systems™ screened vault consists of a cylindrical PVC vault with a fiberglass base and eight 1 3/8-inch influent holes, evenly spaced around the perimeter. The influent holes are located such that, when the vault is in place in a tank, the holes are at the midpoint of the clear liquid layer between the sludge and scum.

After the influent enters through the holes it is then screened before pumping by passing through the 1/8" mesh polyethylene screen concentrically located inside the vault.

(U.S. Patent No. 4439323)

Superb Filtering - No more clogged pumps

Benefits - Corrosion proof
- Helps prevent drainfield failure caused by unfiltered effluent
- Allows use of 1/8-inch orifices in sand filter manifold
- Versatile use with turbine effluent pumps, submersible effluent pumps, and dosing siphons
- Provides pretreatment of effluent

screened system	TSS mg/l = 29	BOD mg/l = 123
unscreened system	TSS mg/l = 71	BOD mg/l = 139

Polyethylene Screen

Resin:	Polyethylene
Color:	Black
Additives:	UV Stabilizer
Strand Count:	TD = 5.00/inch MD = 6.05/inch

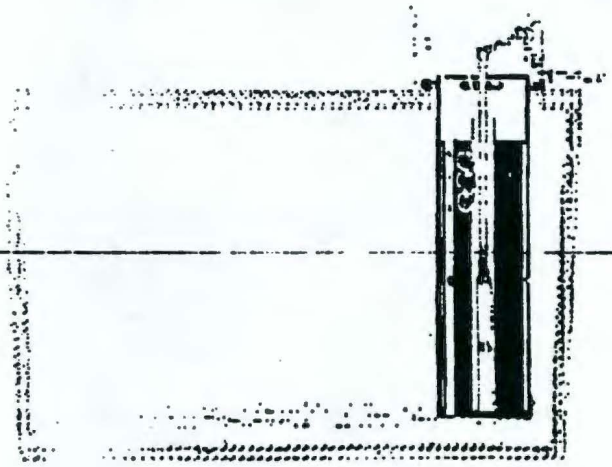

Model Type	Height	Diameter
SV1540	48"	15"
SV1548 FI	48"	15"
SV1560	60"	15"
SV1560 FI	60"	15"
SV1560 DFI	60"	15"

Orenco Systems Incorporated
2828 Crimmin Road
Roseburg, Oregon 97470
(503) 673-0185
Fax (503) 673-1126
© 1993 Orenco Systems Inc.

ORENCO SYSTEMS, INC.
2826 Colonial Road Roseburg, OR 97470
503 673-0165

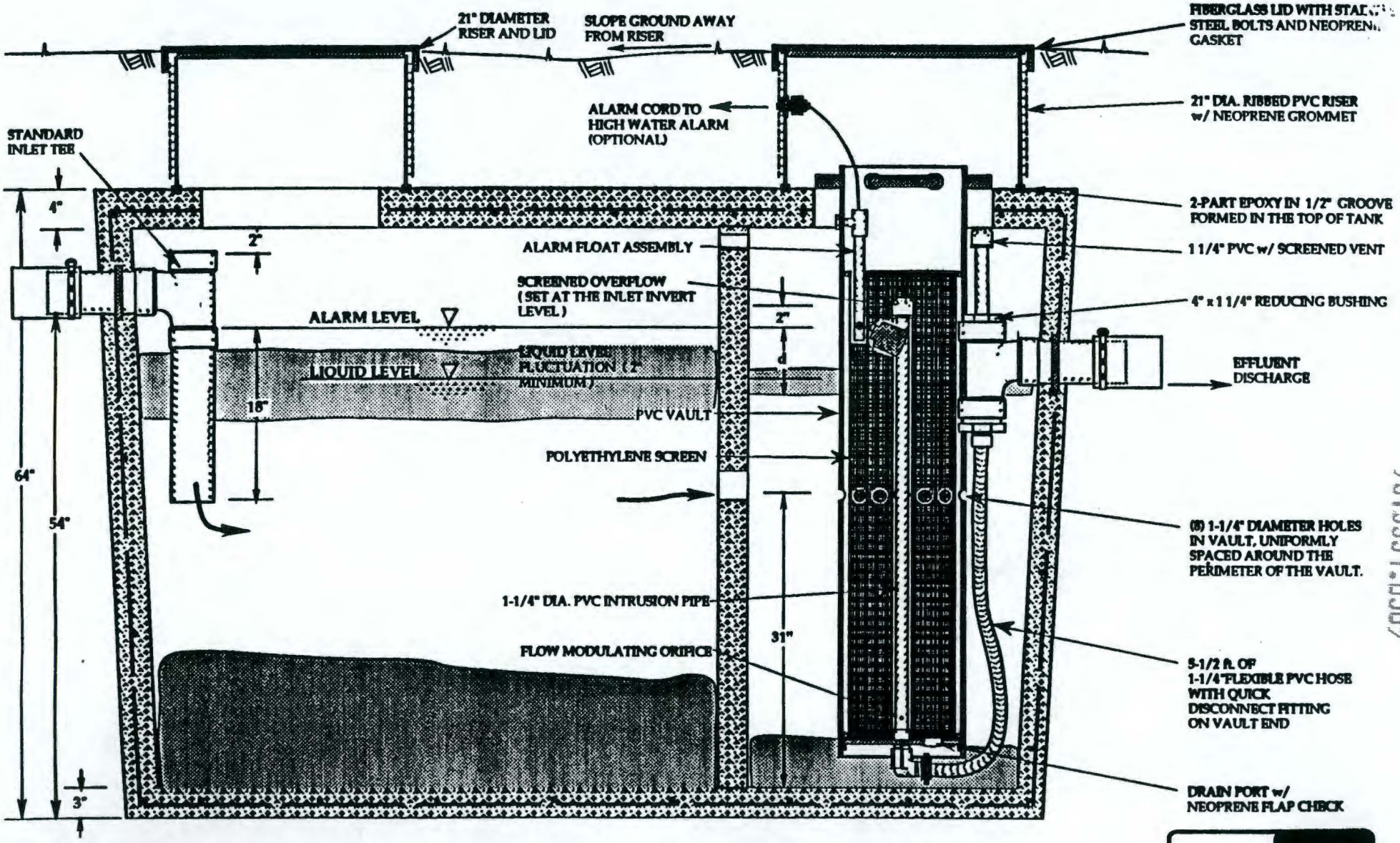

SIDE VIEW TYPICAL TWO COMPARTMENT 1000 or 1500 GAL SEPTIC TANK

drawing 15

© 2/19/91, Orenco Systems Inc.
U.S. Patent No. 4459123

9513334.0389

Orenco Systems, Inc.
2826 Colonial Road Roseburg, OR 97470
Phone (503) 673-0165 FAX (503) 673-1126

FAX TRANSMITTAL

Date: Thu, Jun 16, 1994

To: TRIAD MECHANICAL
Attn: Loren
Fax #: 509-373-0233
From: Mark
No. of pages: 1
Re: request for O&M documents

In regards to your request for operating and maintenance documents for the following:
1) Activated Carbon Filter
2) Effluent Filter
3) Dose Counter
I regret to inform you that none exist at the present time. This is probably due to the fact that they all require very little attention. In lieu of actual instructions for long term use, I offer the following:
1) For the carbon filter, replace the activated charcoal as soon as any odors are detected.
2) The effluent filter will require cleaning of the screen as often as the tank is pumped.
3) The dose counter should have its count recorded periodically. If the counts seem to be sporadic over a long period of time, send it to us for an evaluation.

I hope this helps you out. Please feel free to call if you have any questions.

Mark Rains

9513334.0391

EXTERIOR EPOXY PAINT FOR SEPTIC TANK STRUCTURE

9513334.0392

carboline®

CARBOLINE® 890

VOC+

SELECTION DATA

GENERIC TYPE: Two component, cross-linked epoxy.

GENERAL PROPERTIES: CARBOLINE 890 is a high solids, high gloss, high build epoxy topcoat that can be applied by spray, brush, or roller. The cured film provides a tough, cleanable and esthetically pleasing surface. Available in a wide variety of clean, bright colors. Features include:

- Good flexibility and lower stress upon curing than most epoxy coatings.
- Very good weathering resistance for a high gloss epoxy.
- Very good abrasion resistance.
- Excellent performance in wet exposures.
- Meets the most stringent VOC (Volatile Organic Content) regulations.

RECOMMENDED USES: Recommended where a high performance, attractive, chemically resistant epoxy topcoat is desired. Offers outstanding protection for interior floors, walls, piping, equipment and structural steel or as an exterior coating for tank farms, railcars, structural steel and equipment in various corrosive environments. Recommended industrial environments include Chemical Processing, Offshore Oil and Gas, Food Processing and Pharmaceutical, Water and Waste Water Treatment, Pulp and Paper, Power Generation among others. May be used as a two coat system direct to metal or concrete for Water and Municipal Waste Water immersion. CARBOLINE 890 has been accepted for use in areas controlled by USDA regulations for incidental food contact. Consult Carboline Technical Service Department for other specific uses.

NOT RECOMMENDED FOR: Strong acid or solvent exposures, or immersion service other than recommended.

TYPICAL CHEMICAL RESISTANCE:

Exposure	Immersion	Splash and Spillage	Fumes
Acids	NR	Very Good	Very Good
Alkalies	NR	Excellent	Excellent
Solvents	NR	Very Good	Excellent
Salt Solutions	Excellent	Excellent	Excellent
Water	Excellent	Excellent	Excellent

*NR = Not recommended

TEMPERATURE RESISTANCE:
Continuous: 200° F (93° C)
Non-continuous: 250° F (121° C)

At 300° F, coating discoloration and loss of gloss is observed, without loss of film integrity.

SUBSTRATES: Apply over suitably prepared metal, concrete, or other surfaces as recommended.

COMPATIBLE COATINGS: May be applied directly over inorganic zincs, weathered galvanizing, catalyzed epoxies, phenolics or other coatings as instructed. A test patch is recommended before use over existing coatings. May be used as a tiecoat over inorganic zincs. A mist coat of CARBOLINE 890 is required when applied over inorganic zincs to minimize bubbling. May be topcoated to upgrade weathering resistance. Not recommended over chlorinated rubber or latex coatings. Consult Carboline Technical Service Department for specific recommendations.

April 91 Replaces Oct. 90

SPECIFICATION DATA

THEORETICAL SOLIDS CONTENT OF MIXED MATERIAL:*

	By Volume
CARBOLINE 890	75%±2%

VOLATILE ORGANIC CONTENT:*
As Supplied: 1.78 lbs./gal.(214 gm/liter)
Thinned: The following are nominal values utilizing:
CARBOLINE Thinner # 2 (spray application)

% Thinned	Fluid Ounces/Gal.	Pounds/ Gallon	Grams/ Liter
10%	12.8	2.26	271
CARBOLINE Thinner #33 (brush & roller application)			
12%	16	2.38	285

*Varies with color

RECOMMENDED DRY FILM THICKNESS PER COAT:
4-6 mils(100-150 microns).

5-7 mils (125-175 microns) DFT for a more uniform gloss over inorganic zincs.

Dry film thicknesses in excess of 10 mils(250 microns) per coat are not recommended. Excessive film thickness over inorganic zinc may increase damage during shipping or erection.

THEORETICAL COVERAGE PER MIXED GALLON:
1203 mil sq. ft. (30 sq. m/l at 25 microns)
241 sq. ft. at 5 mils(6.0 sq. m/l at 125 microns)
Mixing and application losses will vary and must be taken into consideration when estimating job requirements.

STORAGE CONDITIONS: Store Indoors
Temperature: 40-110° F (4-43° C)
Humidity: 0-100%

SHELF LIFE: Twenty-four months minimum when stored at 75° F (24° C).

COLORS: Available in Carboline Color Chart colors. Some colors may require two coats for adequate hiding. Colors containing lead or chrome pigments are not USDA acceptable. Consult your local Carboline representative or Carboline Customer Service for availability.

* See notice under DRYING TIMES.

GLOSS: High gloss (Epoxies lose gloss and eventually chalk in sunlight exposure).

ORDERING INFORMATION

Prices may be obtained from your local Carboline Sales Representative or Carboline Customer Service Department.

APPROXIMATE SHIPPING WEIGHT:

	2 Gal. Kit	10 Gal. Kit
CARBOLINE 890	29 lbs. (13 kg)	145 lbs. (66 kg)
THINNER #2	8 lbs. in 1's (4 kg)	39 lbs. in 5's (18 kg)
THINNER #33	9 lbs. in 1's (4 kg)	45 lbs. in 5's (20 kg)

FLASHPOINT: (Pensky-Martens Closed Cup)

CARBOLINE 890 Part A	73° F (23° C)
CARBOLINE 890 Part B	71° F (22° C)
THINNER #2	24° F (−5° C)
THINNER #33	98° F (37° C)

To the best of our knowledge the technical data contained herein are true and accurate at the date of issuance and are subject to change without prior notice. User must contact Carboline Company to verify correctness before specifying or ordering. No guarantee of accuracy is given or implied. We guarantee our products to conform to Carboline quality control. We assume no responsibility for coverage, performance or injuries resulting from usr placement of products. Prices and cost data if shown, are subject to change without prior notice. NO OTHER WARRANTY OR GUARANTEE OF ANY XPRESS OR IMPLIED, STATUTORY, BY OPERATION OF LAW, OR OTHERWISE, INCLUDING MERCHANTABILITY AND FITNESS FOR A PARTICUL'

APPLICATION INSTRUCTIONS

CARBOLINE® 890

These instructions are not intended to show product recommendations for specific service. They are issued as an aid in determining correct surface preparation, mixing instructions and application procedure. It is assumed that the proper product recommendations have been made. These instructions should be followed closely to obtain the maximum service from the materials.

0986

SURFACE PREPARATION: Remove oil or grease from surface to be coated with clean rags soaked in CARBOLINE Thinner #2 or Surface Cleaner #3 (refer to Surface Cleaner #3 instructions) in accordance with SSPC-SP 1.

Steel: Normally applied over clean, dry recommended primers. May be applied directly to metal. For immersion service, abrasive blast to a minimum Near White Metal Finish in accordance with SSPC-SP10, to a degree of cleanliness in accordance with NACE #2 to obtain a 1.5-3 mil (40-75 micron) blast profile. For non-immersion, abrasive blast to a Commercial Grade Finish in accordance with SSPC-SP6, to a degree of cleanliness in accordance with NACE #3 to obtain a 1.5-3 mil (40-75 micron) blast profile.

Concrete: Apply over clean, dry recommended surfacer or primer. Can be applied directly to damp(not visibly wet) or dry concrete where an uneven surface can be tolerated. Remove laitance by abrasive blasting or other means.

Do not coat concrete treated with hardening solutions unless test patches indicate satisfactory adhesion. Do not apply coating unless concrete has cured at least 28 days at 70° F (21° C) and 50% RH or equivalent time.

MIXING: Mix separately, then combine and mix in the following proportions:

	2 Gal. Kit	10 Gal. Kit
CARBOLINE 890 Part A	1 gallon	5 gallons
CARBOLINE 890 Part B	1 gallon	5 gallons

THINNING: For spray applications, may be thinned up to 10% (12.8 fl. oz./gal.) by volume with CARBOLINE Thinner #2.

For brush and roller application may be thinned up to 12 % (16 fl. oz./gal.) by volume with CARBOLINE Thinner #33.

Refer to Specification Data for VOC information.

Use of thinners other than those supplied or approved by Carboline may adversely affect product performance and void product warranty, whether express or implied.

POT LIFE: Three hours at 75° F (24° C) and less at higher temperatures. Pot life ends when material loses film build.

APPLICATION CONDITIONS:

	Material	Surfaces	Ambient	Humidity
Normal	60-85° F (16-29° C)	60-85° F (16-29° C)	60-90° F (16-32° C)	0-80%
Minimum	50° F (10° C)	50° F (10° C)	50° F (10° C)	0%
Maximum	90° F (32° C)	125° F (52° C)	110° F (43° C)	80%

Do not apply when the surface temperature is less than 5° F (or 3° C) above the dew point.

Special thinning and application techniques may be required above or below normal conditions.

SPRAY: This is a high solids coating and may require slight adjustments in spray techniques. Wet film thicknesses are easily and quickly achieved. The following spray equipment has been found suitable and is available from manufacturers such as Binks, DeVilbiss and Graco.

Conventional: Pressure pot equipped with dual regulators, 3/8" I.D. minimum material hose, .070" I.D. fluid tip and appropriate air cap.

Airless:
Pump Ratio: 30:1 (min.)*
GPM Output: 3.0 (min.)
Material Hose: 3/8"I.D.(min.)
Tip Size: .017-.021"
Output psi: 2100-2300
Filter Size: 60 mesh

*Teflon packings are recommended and are available from the pump manufacturer.

BRUSH OR ROLLER: Use medium bristle brush, or good quality short nap roller, avoid excessive rebrushing and rerolling. Two coats may be required to obtain desired appearance, hiding and recommended DFT. For best results, tie-in within 10 minutes at 75° F (24° C).

DRYING TIMES: These times are at 5 mils (125 microns) dry film thickness. Higher film thicknesses will lengthen cure times.

Dry to Touch 2 1/2 hours at 75° F (24° C)
Dry to Handle 6 1/2 hours at 75° F (24° C)

Temperature	Dry to Topcoat**	Final Cure
50° F (10° C)	24 hours	3 days
60° F (16° C)	16 hours	2 days
75° F (24° C)	8 hours	1 day
90° F (32° C)	4 hours	16 hours

**When recoating with CARBOLINE 890, recoat times will be drastically reduced. Contact Carboline Technical Service for specific recommendation.

Recommended minimum cure before immersion service is 5 days at 75° F (24° C).

EXCESSIVE HUMIDITY OR CONDENSATION ON THE SURFACE DURING CURING MAY RESULT IN SURFACE HAZE OR BLUSH; ANY HAZE OR BLUSH MUST BE REMOVED BY WATER WASHING BEFORE RECOATING.

CLEANUP: Use CARBOLINE Thinner #2.

CAUTION: READ AND FOLLOW ALL CAUTION STATEMENTS ON THIS PRODUCT DATA SHEET AND ON THE MATERIAL SAFETY DATA SHEET FOR THIS PRODUCT.

CAUTION: CONTAINS FLAMMABLE SOLVENTS. KEEP AWAY FROM SPARKS AND OPEN FLAMES. IN CONFINED AREAS WORKMEN MUST WEAR FRESH AIRLINE RESPIRATORS. HYPERSENSITIVE PERSONS SHOULD WEAR GLOVES OR USE PROTECTIVE CREAM. ALL ELECTRIC EQUIPMENT AND INSTALLATIONS SHOULD BE MADE AND GROUNDED IN ACCORDANCE WITH THE NATIONAL ELECTRICAL CODE. IN AREAS WHERE EXPLOSION HAZARDS EXIST, WORKMEN SHOULD BE REQUIRED TO USE NONFERROUS TOOLS AND TO WEAR CONDUCTIVE AND NONSPARKING SHOES.

carboline

9513334.0394

SECTION I - PRODUCT: CARBOLINE 890 PART A (0986A1NL)
Date: 04/15/94 Replaces 09/07/93 - VLF

CHEMTREC TRANSPORTATION EMERGENCY PHONE NO.: 800-424-9300
PITTSBURGH POISON CONTROL CENTER HEALTH EMERGENCY NO.: 412-681-6669

SECTION II - HAZARDOUS INGREDIENTS EXPOSURE LIMITS

CHEMICAL NAME	(A)	(B)	(C)	(D)	(E)
COLOR PIGMENT	MIXTURE	25%	3.5MG/M3	NE	NE
SILICA	14808-60-7	15%	0.1MG/M3	NE	NE
EPOXY RESIN	25068-38-6	15%	NE	NE	NE
TOLUENE	108-88-3	5%	100 PPM	150 PPM	NE
XYLENE	1330-20-7	5%	100 PPM	150 PPM	NE
AROMATIC SOLVENT	64742-95-6	5%	25PPM	NE	NE

HAZARDOUS INGREDIENTS ADDITIONAL DATA

CHEMICAL NAME	(F)	(G)
COLOR PIGMENT	NOT AVAILABLE	NO/NO
SILICA	NOT AVAILABLE	NO/NO
EPOXY RESIN	11.4G/KG R >20ML/KG SKIN,SENSITIZER	NO/NO/1,2
TOLUENE	2500 MG/KG RAT,ORAL 18000 PPM/4HRS RAT,INHALATION	NO/YES/1,2,3/ 1000#/U220
XYLENE	4300MG/KG RAT,ORAL 15000 PPM/4HRS RAT,INHALATION	NO/YES/1,2,3/ 1000#/U239
AROMATIC SOLVENT	4700MG/KG RAT,ORAL 3670PPM/8HRS RAT,INHALATION	NO/NO/1,2,3

TABLE (A) CAS NUMBER (B) LESS THAN WT (C) TLV-TWA (D) STEL (E) CEILING (F) TOXICITY DATA (LD50/Route,LC50/Route) (G) SARA 302/SARA 313/ SARA 311-312 CATEGORIES/CERCLA. NE = not established, NR = not required, NO = no. Color Pigment Mixture may contain Iron Oxides, Titanium Dioxide, Carbon Black, and other particulates not otherwise regulated in varying amounts depending on color of product.

WHMIS CLASSIFICATION: B2 -- D2A -- D2B
HMIS/NFPA CLASSIFICATION: HEALTH 2, FLAMMABILITY 3, REACTIVITY 0, PERSONAL PROTECTION CODE G, NFPA FIRE FIGHTING PHASE 4

SECTION III - PHYSICAL DATA:

BOILING RANGE: 232F(111C)-346F(174C). VAPOR DENSITY: Heavier than air. EVAPORATION RATE: Slower than ether. VOLATILE BY WEIGHT 11 %. VOLATILE BY VOLUME: 17 %. PRODUCT WT/GAL: 11.5 LBS/U.S.GAL. 1.38 sp gr. VOC (MIXED PRODUCT THINNED TO MAXIMUM LEVEL): 2.4 LBS/U.S.GAL. 285 gm/lr.

SECTION IV - FIRE AND EXPLOSION HAZARD DATA:

FLAMMABILITY CLASSIFICATION: FLASH POINT: 73 F(22C) (Setaflash) LEL 0.9 % UEL 7.1 %.
OSHA-PAINT/FLAMMABLE/LIQUID/UN1263/PGIII, DOT-PAINT,3,UN1263,PGIII, CANADIAN

9513334.0395

PRODUCT: CARBOLINE 890 PART A (0986A1NL)
Date: 04/15/94 Replaces 09/07/93 - VLF

TDGA: PAINT,3,UN1263,PGIII
EXTINGUISHING MEDIA: Dry Chemical, Foam, Carbon Dioxide, Water Fog.
UNUSUAL FIRE AND EXPLOSION HAZARDS: Vapors are heavier than air and will accumulate. Vapors will form explosive concentrations with air. Vapors travel long distances and will flashback. Use mechanical ventilation when necessary to keep percent vapor below the "Lower Explosion Level" (LEL).
SPECIAL FIRE FIGHTING PROCEDURES: Evacuate hazard area of unprotected personnel. Use a NIOSH approved self-contained breathing unit and complete body protection. Cool surrounding containers with water in case of fire exposure.

SECTION V - HEALTH HAZARD DATA:

INHALATION: Harmful if inhaled, may affect the brain or nervous system, causing dizziness, headache or nausea. May cause nose and throat irritation.
CONTACT: May cause eye irritation. May cause skin irritation. May cause allergic skin reaction.
NOTICE: Contains SILICA which can cause cancer. Risk of cancer depends on duration and level of exposure. Reports have associated repeated and prolonged occupational overexposure to solvents with permanent brain and nervous system damage.
MEDICAL CONDITIONS PRONE TO AGGRAVATION BY EXPOSURE: If sensitized to amines, epoxies or other chemicals do not use. See a physician if a medical condition exists.
PRIMARY ROUTE(S) OF ENTRY: Inhalation, Dermal, Ingestion.
EMERGENCY FIRST AID PROCEDURES: When exposed always get medical attention.
EYE CONTACT: Flush with water for 15 minutes.
SKIN CONTACT: Wash with soap and water. Remove contaminated clothing and clean before reuse.
INHALATION: Remove to fresh air. Provide oxygen if breathing is difficult. Use artificial respiration if not breathing. Get medical attention.
IF SWALLOWED: DO NOT INDUCE VOMITING!! Always get medical attention.

SECTION VI - REACTIVITY DATA:

STABILITY: This product is stable under normal storage conditions.
HAZARDOUS POLYMERIZATION: Will not occur under normal conditions.
HAZARDOUS DECOMPOSITION PRODUCTS: Carbon monoxide, nitrogen oxides, and unidentified organic compounds. Consider all smoke and fumes from burning material as very hazardous. Welding, cutting or abrasive grinding can create smoke and fumes. Do not breathe.
CONDITIONS TO AVOID: Heat, sparks, and open flames.
INCOMPATIBILITY: Avoid contact with strong oxidizing agents.

SECTION VII - SPILL OR LEAK PROCEDURES:

STEPS TO BE TAKEN IN CASE OF SPILL: Eliminate all ignition sources. Handling equipment must be grounded to prevent sparking. Evacuate the area of unprotected personnel. Wear appropriate personal protection clothing and

PRODUCT: CARBOLINE 890 PART A (0986A1NL)
Date: 04/15/94 Replaces 09/07/93 - VLF

equipment. Follow safe handling and use guidelines in Section VIII. Contain and soak up residual with an absorbent (clay or sand). Take up absorbent material and seal tightly for proper disposal. Dispose of in accordance with local, state and federal regulations. Refer to Section II for Sara Title III and CERCLA information.

SECTION VIII - SAFE HANDLING AND USE INFORMATION:

RESPIRATORY PROTECTION: Use only with ventilation to keep levels below exposure guidelines. (Section II). User should test and monitor exposure levels to insure all personnel are below guidelines. If not sure or if not able to monitor use MSHA/NIOSH approved air-purifying respirator.
VENTILATION: Use explosion-proof ventilation when required to keep below health exposure guidelines and Lower Explosion Limit (LEL).
SKIN AND EYE PROTECTION: Recommend impervious gloves, clothing and safety glasses with side shields or chemical goggles to avoid skin and eye contact. If material penetrates to skin, change gloves and clothing.
HYGIENIC PRACTICES: Wash with soap and water before eating, drinking, applying cosmetics, or using toilet facilities. Use of a hand cleaner is recommended. Launder contaminated clothing before reuse. Leather shoes can absorb and pass through hazardous materials. Check shoes carefully after soaking before reuse.

SECTION IX - SPECIAL PRECAUTIONS:

PRECAUTIONS TO BE TAKEN IN HANDLING AND STORAGE: Keep away from heat, sparks, open flame, and strong oxidizing agents. Keep containers closed. Store in cool, dry place with adequate ventilation. If pouring or transferring materials, ground all containers and tools.
OTHER PRECAUTIONS: Do not weld, heat, cut or drill on full or empty containers.

The information contained herein is, to the best of our knowledge and belief accurate. However, since the conditions of handling and use are beyond our control, we make no guarantee of results, and assume no liability for damages incurred by use of this material. It is the responsibility of the user to comply with all applicable federal, state, and local laws and regulations.

Carboline Company 350 Hanley Ind. Ct. St. Louis, MO 63144
PHONE NO. 314-644-1000 FOR INDUSTRIAL USE ONLY

CARBOLINE CO. MATERIAL SAFETY DATA SHEET NON-HAZARDOUS
PRODUCT: CARBOLINE 890 PART A 7515554.0597 (0986AINL)
Date: 04/15/94 Replaces 09/07/93 - VLF

Non-Hazardous Materials above 1 Percent:

Name	CAS	Pct
ALKYL PHTHALATE	NE	20%
EPOXY RESIN	25036-25-3	20%
EPOXY RESIN	25036-25-3	15%

SECTION I - PRODUCT: CARBOLINE 890 PART B (0986B1NL)
Date: 09/07/93 Replaces 02/26/93 - VLF

CHEMTREC TRANSPORTATION EMERGENCY PHONE NO.: 800-424-9300
PITTSBURGH POISON CONTROL CENTER HEALTH EMERGENCY NO.: 412-681-6669

SECTION II - HAZARDOUS INGREDIENTS EXPOSURE LIMITS

CHEMICAL NAME	(A)	(B)	(C)	(D)	(E)
SILICA	14808-60-7	65%	0.1MG/M3	NE	NE
XYLENE	1330-20-7	10%	100 PPM	150 PPM	NE
ALIPHATIC AMINE	NE	5%	NE	NE	NE
CYCLOALIPHATIC AMINE	BLEND	5%	NE	NE	NE
AROMATIC SOLVENT	64742-95-6	5%	25PPM	NE	NE
ISOPROPANOL	67-63-0	5%	400 PPM	500 PPM	NE

HAZARDOUS INGREDIENTS ADDITIONAL DATA

CHEMICAL NAME	(F)	(G)
SILICA	NOT AVAILABLE	NO/NO
XYLENE	4300MG/KG RAT,ORAL 15000 PPM/4HRS RAT,INHALATION	NO/YES/1,2,3
ALIPHATIC AMINE	NOT AVAILABLE	NO/NO/1,2
CYCLOALIPHATIC AMINE	NOT AVAILABLE	NO/NO/1,2
AROMATIC SOLVENT	4700MG/KG RAT,ORAL 3670PPM/8HRS RAT,INHALATION	NO/NO/1,2,3
ISOPROPANOL	4720MG/KG RAT,ORAL 16000PPM/8HRS RAT,INHALATION	NO/NO/3

TABLE (A) CAS NUMBER (B) LESS THAN WT (C) TLV-TWA (D) STEL (E) CEILING (F) TOXICITY DATA (LD50/Route,LC50/Route) (G) SARA 302/SARA 313/ SARA 311-312 CATEGORIES/CERCLA. NE = not established, NR = not required, NO = no. Color Pigment Mixture may contain Iron Oxides, Titanium Dioxide, Carbon Black, and other particulates not otherwise regulated in varying amounts depending on color of product.

WHMIS CLASSIFICATION: B2 -- D2A -- D2B
HMIS/NFPA CLASSIFICATION: HEALTH 3, FLAMMABILITY 3, REACTIVITY 1, PERSONAL PROTECTION CODE G, NFPA FIRE FIGHTING PHASE 4

SECTION III - PHYSICAL DATA:

BOILING RANGE: 180F(82C)-346F(174C). VAPOR DENSITY: Heavier than air. EVAPORATION RATE: Slower than ether. VOLATILE BY WEIGHT 17 %. VOLATILE BY VOLUME: 33 %. PRODUCT WT/GAL: 13.6 LBS/U.S.GAL. 1.63 sp gr.

SECTION IV - FIRE AND EXPLOSION HAZARD DATA:

FLAMMABILITY CLASSIFICATION: FLASH POINT: 71 F(21C) (Setaflash) LEL 0.9 % UEL 12.7 %.
OSHA-PAINT/CLASS/3/UN1263/PGII, DOT-PAINT, CLASS 3, UN1263, PGII, CANADIAN TDGA: PAINT, CLASS 3, UN1263, PG II
EXTINGUISHING MEDIA: Dry Chemical, Foam, Carbon Dioxide, Water Fog.

9513334.0399

PRODUCT: CARBOLINE 890 PART B (0986B1NL)
Date: 09/07/93 Replaces 02/26/93 - VLF

UNUSUAL FIRE AND EXPLOSION HAZARDS: Vapors are heavier than air and will accumulate. Vapors will form explosive concentrations with air. Vapors travel long distances and will flashback. Use mechanical ventilation when necessary to keep percent vapor below the "Lower Explosion Level" (LEL).
SPECIAL FIRE FIGHTING PROCEDURES: Evacuate hazard area of unprotected personnel. Use a NIOSH approved self-contained breathing unit and complete body protection. Cool surrounding containers with water in case of fire exposure.

SECTION V - HEALTH HAZARD DATA:

INHALATION: Harmful if inhaled, may affect the brain or nervous system, causing dizziness, headache or nausea. May cause nose and throat irritation.
CONTACT: May cause eye burns. May cause skin burns. May cause allergic skin reaction.
NOTICE: Contains SILICA which can cause cancer. Risk of cancer depends on duration and level of exposure. Reports have associated repeated and prolonged occupational overexposure to solvents with permanent brain and nervous system damage.
MEDICAL CONDITIONS PRONE TO AGGRAVATION BY EXPOSURE: If sensitized to amines, epoxies or other chemicals do not use. See a physician if a medical condition exists.
PRIMARY ROUTE(S) OF ENTRY: Inhalation, Dermal, Ingestion.
EMERGENCY FIRST AID PROCEDURES: When exposed always get medical attention.
EYE CONTACT: Flush with water for 15 minutes.
SKIN CONTACT: Wash with soap and water. Remove contaminated clothing and clean before reuse.
INHALATION: Remove to fresh air. Provide oxygen if breathing is difficult. Use artificial respiration if not breathing. Get medical attention.
IF SWALLOWED: DO NOT INDUCE VOMITING!! Always get medical attention.

SECTION VI - REACTIVITY DATA:

STABILITY: This product is stable under normal storage conditions.
HAZARDOUS POLYMERIZATION: Will not occur under normal conditions.
HAZARDOUS DECOMPOSITION PRODUCTS: Carbon monoxide, nitrogen oxides, and unidentified organic compounds. Consider all smoke and fumes from burning material as very hazardous. Welding, cutting or abrasive grinding can create smoke and fumes. Do not breathe.
CONDITIONS TO AVOID: Heat, sparks, and open flames.
INCOMPATIBILITY: Avoid contact with strong oxidizing agents.

SECTION VII - SPILL OR LEAK PROCEDURES:

STEPS TO BE TAKEN IN CASE OF SPILL: Eliminate all ignition sources. Handling equipment must be grounded to prevent sparking. Evacuate the area of unprotected personnel. Wear appropriate personal protection clothing and equipment. Follow safe handling and use guidelines in Section VIII. Contain and soak up residual with an absorbent (clay or sand). Take up absorbent

9513334.0400

PRODUCT: CARBOLINE 890 PART B (0986B1NL)
Date: 09/07/93 Replaces 02/26/93 - VLF

material and seal tightly for proper disposal. Dispose of in accordance with local, state and federal regulations. Refer to Section II for Sara Title III and CERCLA information.

SECTION VIII - SAFE HANDLING AND USE INFORMATION:

RESPIRATORY PROTECTION: Use only with ventilation to keep levels below exposure guidelines. (Section II). User should test and monitor exposure levels to insure all personnel are below guidelines. If not sure or if not able to monitor use MSHA/NIOSH approved air-purifying respirator.
VENTILATION: Use explosion-proof ventilation when required to keep below health exposure guidelines and Lower Explosion Limit (LEL).
SKIN AND EYE PROTECTION: Recommend impervious gloves, clothing and safety glasses with side shields or chemical goggles to avoid skin and eye contact. If material penetrates to skin, change gloves and clothing.
HYGIENIC PRACTICES: Wash with soap and water before eating, drinking, applying cosmetics, or using toilet facilities. Use of a hand cleaner is recommended. Launder contaminated clothing before reuse. Leather shoes can absorb and pass through hazardous materials. Check shoes carefully after soaking before reuse.

SECTION IX - SPECIAL PRECAUTIONS:

PRECAUTIONS TO BE TAKEN IN HANDLING AND STORAGE: Keep away from heat, sparks, open flame, and strong oxidizing agents. Keep containers closed. Store in cool, dry place with adequate ventilation. If pouring or transferring materials, ground all containers and tools.
OTHER PRECAUTIONS: Do not weld, heat, cut or drill on full or empty containers.

The information contained herein is, to the best of our knowledge and belief accurate. However, since the conditions of handling and use are beyond our control, we make no guarantee of results, and assume no liability for damages incurred by use of this material. It is the responsibility of the user to comply with all applicable federal, state, and local laws and regulations.

Carboline Company 350 Hanley Ind. Ct. St. Louis, MO 63144
PHONE NO. 314-644-1000 FOR INDUSTRIAL USE ONLY

Non-Hazardous Materials above 1 Percent:

Name	CAS	Pct
BENZYL ALCOHOL	100-51-6	10%
UREA	NE	5%

MEDIUM SAND FILL

Fine aggregate from Pasco Pit FN-50 was used as medium sand fill beneath the drainfield beds in Accordance with WDOH "Design Guidelines for Larger On-Site Sewage Systems with Design Flows Greater Than 3500 Gallons Per Day" (reference drawing H-2-117169-1). The following report summarizes the aggregate gradation test results for this fill.

9513334.0403

AGGREGATE GRADATION TEST REPORT

Source: Fine Agg., Pasco Pit FN-50 / Coarse Agg., Hanford Pit 30 — Date Tested: 09.22.93

Time Tested: 0730 (AM) PM — Tested by: C. Bell — Level: 1

Aggregate Size: ASTM #4 (1 1/2" to 3/4")

Size	Lbs	% Ret.	% Pass	Spec.
2"				100
1 1/2"				90-100
1"				20-55
3/4"				0-15
3/8"				0-5
Total				

F.M. =

ASTM C-117 in % — 1.5% Max.

Clay Lumps & Friables %

Aggregate Size: ASTM #57 (1" to #4)

Size	Lbs	% Ret.	% Pass	Spec.
1 1/2"				100
1"				95-100
1/2"				25-60
#4				0-10
#8"				0-5
Total				

F.M. =

ASTM C-117 in % — 1.5% Max.

Clay Lumps & Friables %

Aggregate Size: ASTM #67 (3/4" to #4)

Size	Lbs	% Ret.	% Pass	Spec.
1"	0	00	100	100
3/4"	0.8	07	93	90-100
3/8"	7.6	67	37	20-55
#4	11.0	96	04	0-10
#8	11.2	98	02	0-5
Total	11.4	100	0	

F.M. = 6.68

ASTM C-117 in % 0.1 % — 1.5% Max.

Clay Lumps & Friables %

Aggregate Size: ASTM #8 (3/8" to #8)

Size	Lbs	% Ret.	% Pass	Spec.
1/2"				100
3/8"				85-100
#4				10-30
#8				0-10
#16				0-5
Total				

F.M. =

ASTM C-117 in % — 1.5% Max.

Clay Lumps & Friables %

Fine Aggregate Gradation (1/4" Minus)

OK From PASCO

Size	Grams	% Ret.	% Pass	Spec.
3/8"	0	0	100	100
#4	10	2	98	95-100
#8	77	16	84	80-100
#16	144	30	70	50-85
#30	222	46	54	25-60
#50	411	86	14	10-30
#100	463	97	03	2-10
Total	479	100	0	

Lighter Than Plate # 1 — F.M. = 2.77

ASTM C-117 in % 1.5 % — 3.0% Max.

Clay Lumps & Friables %

Aggregate Moisture

Size	%Total Moisture	%Absorb Moisture	%Free Moisture
3/4"	~~1 3/4~~ 1.2	2.3	-0.9
Sand	4.4	3.1	1.3

Scale Serial No. (platform): IRN0158

Scale Serial No. (solution): H440-25-87, 2610g #1

Fine Sieve Series: FS-1

Coarse Sieve Series: CS-1

Comments: VCAT Sidewalks, etc 4 1/2 Cu.Yds.

Sand 500g Wet 479 g Dry, 472 Washed Dry

3/4" 3000 g Wet 3952 g Dry, 3947 Washed Dry

~~CPM QC/QA~~ REVIEWED BY CBell DATE 09.27.93

~~CPM QC/QA~~ CONFORMS BY CBell DATE 09.27.93

Approved by: Charlie Bell — Date 09.27.93

C-152 03/93

DRAINFIELD FILTER AGGREGATE

ASTM C33 Coarse Aggregate, Size No. 4, from Hanford Pit No. 30, was used as filter aggregate in the construction of the drainfields in accordance with the WDOH "Design Guidelines for Larger On-Site Sewage Systems with Design Flows Greater Than 3500 Gallons Per Day" (reference drawing H-2-117169-1). The following report summarizes the aggregate gradation test data for this fill.

CENTRAL PRE-MIX CONCRETE CO.

MATERIAL TESTING DATA

SAMPLE NO. _____

MATERIAL: ASTM C33 Coarse Agg. Size No. 4 PROJECT: _____

DATE: 07-14-93 TIME: 1:25p.m. SAMPLED BY: Mark

PIT SITE: Pit No. 30, Hanford CONTRACTOR: _____

AGENCY: _____

AGGREGATE GRADATION

ASTM C33 Coarse Aggregate, Size No. 4

Screen	WL	%Ret.	%Passing	Spec.
2"	0	0	100	100%
1 1/2"	2.93	5	95	90-100%
1"	20.61	67	33	20-55%
3/4"	29.04	94	6	0-15%
3/8"	30.74	99	1	0-5%
Total	30.97	F.M. = 8.66		

5 x 14	5 x 14	5 x 14
TOP DECK	SECOND DECK	BOTTOM DECK

Remarks:

CPM-QC/QA REVIEWED BY LB DATE 09-15-93

CPM-QC/QA CONFORMS BY LB DATE 09-15-93

SPOKANE ☐ COEUR D'ALENE ☐ MOSCOW-PULLMAN ☐ TRI-CITIES ☐ YAKIMA ☐ SEATTLE
CORPORATE OFFICE: E. 5111 BROADWAY
P.O. BOX 3366 • SPOKANE, WASHINGTON 99220-3366 • (509) 534-6221

INTERMOUNTAIN MATERIALS TESTING, INC.
7446 Lemhi St., Boise, Idaho 83709 fax: (208) 378-[illegible] tel: (208) 378-3203
1718 West A St., Pasco, Washington 99301 fax: (509) 547-[illegible] tel: (509) 547-1121

Materials Testing • Construction Inspection • Project Consultation

REPORT TO: Central Pre Mix
P.O. Box 5050
Benton City, Wa. 99320
Attn: Charlie Bell

DATE: 10/27/93
FILE NUMBER:
SHEET: 1 of 1
INVOICE: T931[illegible]

PROJECT: Hanford Site, Richland, Wa.

SAMPLE IDENTIFICATION & TEST RESULTS

On October 27, 1993, your personnel delivered one [illegible] sample of 1 1/2" concrete aggregate to our laboratory.

At your request, we preformed a Mohs Hardness Scratch test. Three (3) different types of mineral were in the sample.

Test Results:

Type #1: A dark colored basalt that was scratched by Quartz #7 would not scratch with Felspar #6.

Type #2: A light colored river rock that was scratched by Quartz #7 would not scratch with Felspar #6.

Type #3: A light colored Granite that was scratched by Apatite #5 would not scratch with Flouride #4.

Reviewed by [illegible]

CENTRAL PRE-MIX CONCRETE CO.

HWVP Project - Hanford

Sieve Analysis of Aggregates - Summary Report

ASTM C33, Coarse Aggregate Size No.4 1½" to ¾"

Location: HWVP Project - Aggregate Plant Production

Date Tested	Sieve Size - Percent Passing								
	2"	1½"	1"	3/4"	½"	3/8"	No. 4	No. 8	No. 16
07.07.93	100	96	37	11		01			
07-08.93	100	97	41	09		01			
07-08.93	100	89	28	07		01			
07-09.93	100	94	39	04		01			
07.09.93	100	93	34	03		00			
07.09.93	100	97	42	06		00			
07.09.93	100	94	39	04		01			
07-12.93	100	94	34	05		01			
07.12.93	100	92	40	05		00			
07.12.93	100	93	35	06		00			
07.13.93	100	95	38	05		00			
07.13.93	100	92	36	09		02			
07-13.93	100	94	40	07		00			
07.13.93	100	94	42	07		01			
07.13.93	100	94	39	05		00			
07.13.93	100	95	34	04		00			
07.14.93	100	95	39	04		01			
07.14.93	100	96	38	07		01			
07-14-93	100	94.	36	05		00			
07.14.93	100	92	39	09		01			
07.14.93	100	95	33	06		01			
07.15.93	100	97	33	04		00			
07.15.93	100	89	35	04		01			
07-15.93	100	93	35	06		01			
07.15.93	100	96	42	07		01			
07.15.93	100	91	30	03		01			
Specification Limits	100	90-100	20-55	0-15		0-5			

Page 1 of 3

CENTRAL PRE-MIX CONCRETE CO.

HWVP Project - Hanford

Sieve Analysis of Aggregates - Summary Report

ASTM C33, Coarse Aggregate Size No. 4 (1½" to ¾")

Location: HWVP Project - Aggregate Plant Production

Date Tested	Sieve Size - Percent Passing								
	2"	1½"	1"	3/4"	½"	3/8"	No. 4	No. 8	No. 16
07.15.93	100	91	30	03		01			
07.16.93	100	89	39	08		01			
07.16.93	100	93	37	07		01			
Sum of Tests	2900	2714	1064	170		20			
No. of Tests	29	29	29	29		29			
Avg. of Tests	100	94	37	06		01			
Specification Limits	100	90-100	20-55	0-15		0-5			

Page 2 of 3

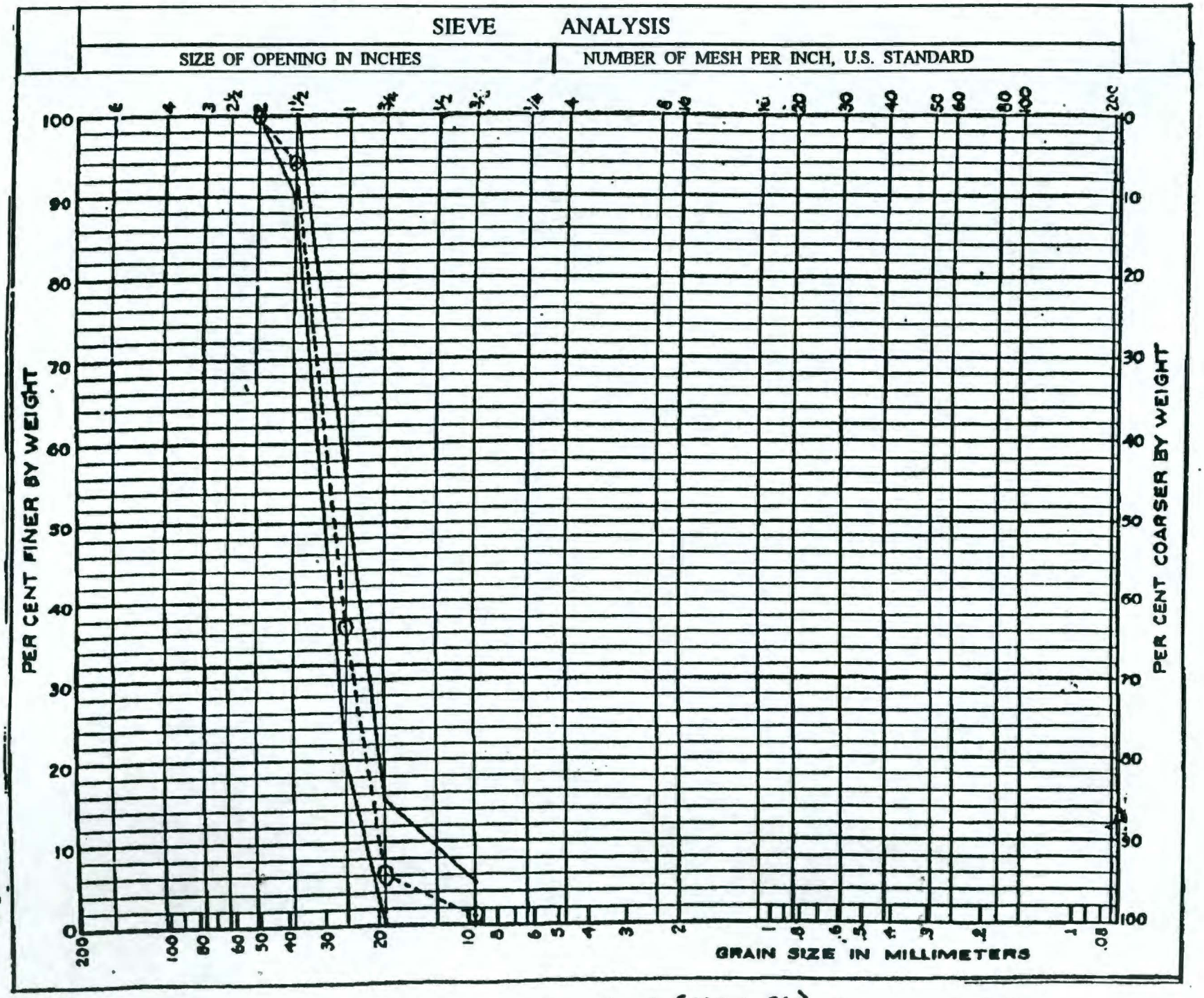

Size No. 4 (1½" to ¾") Average of Tests

Page 3 of 3

9513334.0409

GEOTEXTILE FILTER FABRIC

Typar 3401 nonwoven geotextile filter fabric material as manufactured by Reemay, Inc. was used in the drainfields to separate the filter aggregate from the overburden backfill materials in accordance with the WDOH "Design Guidelines for Larger On-Site Sewage Systems with Design Flows Greater Than 3500 Gallons Per Day" (reference drawing H-2-117169-1, detail A).

9513334.0411

The ideal soil-separating nonwoven fabric for all construction uses.

How Typar Geotextiles Work.
Tough spunbonded polypropylene fabric separates subgrade from aggregate base. Porous fabric lets water drain through, keeps soil in place.

No matter what your needs, Typar offers a fast, economical and proven alternative to more traditional and expensive construction methods.

As rugged separation layers, geotextiles provide stability and strength by virtually stopping the aggregate and subgrade intermixing that reduces the effective thickness of aggregate base layers and, consequently, their load-bearing capability.

Tough, durable Typar offers a number of benefits:

- Prevents aggregate from intermixing with subsoil
- Prevents ruts and cracks on roads and driveways
- Prevents soil piping and clogging for better drainage
- Prevents erosion

Typar Nonwoven Geotextile Products' Physical Properties and Applications*

Properties	Test Method	Typar 3151	Typar 3201	Typar 3301	Typar 3341	Typar 3401	Typar 3601
Unit Weight (oz/yd²)	ASTM D-3776	1.6	1.9	3.0	3.4	4.0	6.0
Grab Tensile (lbs)	ASTM D-4632	47	73	130	140	145	240
Elongation at Break (%)	ASTM D-4632	>70	>70	>70	>70	>70	>70
Modulus at 10% Elongation (lbs)	ASTM D-4632	235	360	650	660	790	1300
Trap Tear (lbs)	ASTM D-4533	23	35	40	50	75	90
Mullen Burst Strength (psi)	ASTM D-3786	65	80	110	115	175	260
Puncture Strength (lbs)	ASTM D-751 Modified	16	23	35	40	50	75
A.O.S. (equiv. sieve)	ASTM D-4751	20/30	30/40	60/70	60/70	70/100	170/200
(mm)		0.81	0.52	0.24	0.23	0.17	0.08
Flux (gal/ft²/min)	ASTM D-4491	236	200	100	86	62	25
Permittivity (sec⁻¹)	ASTM D-4491	3.1	2.6	1.3	1.1	.8	.3
Coefficient of Permeability (x10⁻²cm/sec)	ASTM D-4491	8	7	4	4	3	2
Accelerated Weathering Strength Retained after 500 Hours (%)	ASTM D-4355	—	—	—	70	80	90
Applications							
Paved Roads & Parking Lots					■	■	■
Industrial Yards & Areas					■	■	■
Subsurface Drains			■	■	■	■	
Erosion Control					■	■	■
Landfills					■	■	■
Recreational facilities			■	■	■	■	
Septic Systems		■	■	■	■		
Landscaping			■	■			

Typar Nonwoven Geotextile Products' Physical Properties and Applications*

Packaging	TYPAR 3151	TYPAR 3201	TYPAR 3301	TYPAR 3341	TYPAR 3401	TYPAR 3601
Roll width (in)	60 151	36 48 75 151	36 48 75 151	151 197	151 197	151 187
Roll length (lin yd)	100	100	100	100	100	100
Roll diameter (in)	7	7	8	8	9	10
Net weight (lb)	17 42	12 16 25 50	19 25 38 79	89 116	105 136	157 194
Area $(yd)^2$	160 420	100 133 208 420	100 133 208 420	420 547	420 547	420 519

*The facts stated and the recommendations made herein based on our research and research of others are offered free of charge and are believed to be accurate. No guarantee of their accuracy is made, however, and the products discussed are distributed without warranty, expressed or implied, and upon condition that recipients shall make their own tests to determine the suitability of such products for their particular purposes. Likewise statements concerning the possible uses of our product are not intended as a recommendation to use it in the infringement of any patent, whether owned by Reemay, Inc. or by others.

REEMAY
a member of The InterTech Group, Inc.

Reemay, Inc.
Industrial Road
P.O. Box 511
Old Hickory, TN 37138
1-800-321-6271

9513334.0413

CERTIFICATE OF COMPLIANCE

BENTON-FRANKLIN HEALTH DISTRICT

PERMIT

October 25, 1993
DATE

B-FSI-R93-35
NUMBER

(NON-TRANSFERABLE)

TRIAD MECHANICAL, INC.
NAME OF ESTABLISHMENT

2133 North Argyle, Portland, OR 97217
ADDRESS

Edward A. Carpenter
OWNER OR MANAGER

SEPTIC TANK INSTALLER

is hereby granted permission to conduct the particular business specified in accordance with County, City and State ordinances, rules and regulations thereof.

This Permit Valid Through December 31, 19 93

THIS PERMIT SHALL BE CONSIDERED NULL AND VOID SHOULD AT ANY TIME DURING ITS TERM, THE PERMITTEE FAIL TO COMPLY WITH THE REGISTRATION REQUIREMENTS SET FORTH BY THE WASHINGTON STATE DEPARTMENT OF LABOR AND INDUSTRIES.

Ronald G. Williams MD
DISTRICT HEALTH OFFICER

ENVIRONMENTAL HEALTH SPECIALIST
James R. Dawson, Supervisor

Post This Permit in a Conspicuous Place

9513334.0414

9513334.0415

APPENDIX E - CONSTRUCTION SPECIFICATIONS

U.S. DEPARTMENT OF ENERGY
Hanford Waste Vitrification Plant
Richland, Washington
DOE Contract DE-AC06-86RL10838

FLUOR DANIEL, INC.
Advanced Technology Division
Fluor Contract 8457

SECTION 02730
SANITARY SEWER SYSTEM
B-595-C-A160-02730

AS-BUILT

REVISION 3 PER DCN-0157 AND DCN-0169, FRR 0723B
ISSUE DATE _____

WAPA YES ___ NO X
QUALITY LEVEL I ___ II X
SAFETY CLASS 1__ 2__ 3__ 4 X

ORIGINATOR:

S. Myrter, Civil Engineer Date

CHECKER:

B. R. Eisenbise, Lead Discipline Date

APPROVED BY:

B. R. Eisenbise Lead Discipline Engineer Date

SECTION 02730
SANITARY SEWER SYSTEM
B-595-C-A160-02730

TABLE OF CONTENTS

PART		PAGE
PART 1	GENERAL	1
1.1	SUMMARY	1
1.2	REFERENCES	1
1.3	RELATED REQUIREMENTS	3
1.4	SYSTEM DESCRIPTION	3
1.5	SUBMITTALS	3
PART 2	PRODUCTS	5
2.1	MATERIALS AND EQUIPMENT	5
2.2	FABRICATION AND MANUFACTURE	8
PART 3	EXECUTION	9
3.1	INSTALLATION, APPLICATION AND ERECTION	9
3.2	FIELD QUALITY CONTROL	11
3.3	CLEANING	14

SECTION 02730
SANITARY SEWER SYSTEM

PART 1 GENERAL

1.1 SUMMARY

This section covers the technical requirements for the furnishing, installing, inspection and testing of the exterior sanitary sewer, septic tank and drainfield system and appurtenances as shown on the Contract Drawings.

1.2 REFERENCES

The publications listed below form a part of this section to the extent referenced. The publications are referred to in the text by the basic designation only.

AMERICAN ASSOCIATION OF STATE HIGHWAY AND TRANSPORTATION OFFICIALS (AASHTO)

AASHTO Division I, Section 3	1990 Standard Specifications for Highway Bridges, Loads

AMERICAN CONCRETE INSTITUTE (ACI)

ACI 318	1989 Building Code Requirements for Reinforced Concrete

AMERICAN SOCIETY FOR TESTING AND MATERIALS (ASTM)

ASTM A36/A36M	1990 Standard Specification for Structural Steel
ASTM A48	1983 Standard Specification for Grey Iron Castings
ASTM A123	1989 Standard Specification for Zinc (Hot Dip Galvanized) Coating on Iron and Steel Products
ASTM A760	1990 Corrugated Steel Pipe, Metallic Coated for Sewers and Drains
ASTM C33	1990 Standard Specification for Concrete Aggregates
ASTM C478	1988 (Rev. A) Standard Specification for Precast Reinforced Concrete Manhole Sections

ASTM C969	1982 (R 1990) Standard Practice for Infiltration and Exfiltration Acceptance Testing of Installed Precast Concrete Pipe Sewer Lines
ASTM D422	1990 Standard Test Method for Particle-Size Analysis of Soils
ASTM D1785	1989 Standard Specification for Poly Vinyl Chloride (PVC) Plastic Pipe Schedules 40, 80 and 120
ASTM D2412	1987 Standard Test Method for Determination of External Loading Characteristics of Plastic Pipe by Parallel-Plane Loading
ASTM D2466	1989 Standard Specification for Poly (Vinyl Chloride) (PVC) Plastic Pipe Fittings, Schedule 40
ASTM D2564	1988 Standard Specification for Solvent Cements for Poly (Vinyl Chloride) (PVC) Plastic Pipe and Fittings
ASTM D2855	1983 Standard Specification for Making Solvent-Cemented Joints with Poly (Vinyl Chloride) (PVC) Pipe and Fittings
ASTM D3034	1989 Standard Specification for Type PSM Poly (Vinyl Chloride) (PVC) Sewer Pipe and Fittings
ASTM D3212	1989 Standard Specification for Joints for Drain and Sewer Plastic Pipes Using Flexible Elastomeric Seals
ASTM F477	1976 (R 1990) Standard Specification for Elastomeric Seals (Gaskets) for Joining Plastic Pipe

AMERICAN WATER WORKS ASSOCIATION (AWWA)

AWWA C509	1987 Resilient-Seated Gate Valves for Water and Sewerage Systems

~~NATIONAL ELECTRICAL MANUFACTURERS ASSOCIATION (NEMA)~~

~~NEMA 250~~	~~1989 Enclosures for Electrical Equipment (1000 Volts Maximum), Revision 2 May 1988~~

UNI-BELL PLASTIC PIPE ASSOCIATION (UBPPA)

UBPPA UNI-B-3	1988 Installation of Polyvinyl Chloride (PVC) Pressure Pipe
UBPPA UNI-B-5	1982 Installation of Polyvinyl Chloride (PVC) Sewer Pipe

WASHINGTON ADMINISTRATIVE CODE (WAC)

WAC 246-272	On-Site Sewage System Regulations, Rules and Regulations of the Washington State Board of Health, State of Washington

1.3 RELATED REQUIREMENTS

Specification Section 01730	Operations and Maintenance Data
Specification Section 02220	Excavation and Backfill
Specification Section 03300	Concrete Construction
~~Specification Section 11306~~	~~Sewage Lift Station~~
Specification Section 16640	Cathodic Protection System (Sacrificial Anode)

1.4 SYSTEM DESCRIPTION

The gravity sanitary sewer system consists of gravity sewer lines and associated appurtenances which collect and transport sanitary waste from the various buildings and construction facilities to a septic tank. ~~The sewer collection system also contains a sewage lift station that collects sewage from the Canister Storage and other buildings at the south end of the site and pumps it through a force main to the gravity system.~~ The sewage disposal system consists of septic tank, dosing tank with dual siphons, transport lines, manifolds, laterals and drainfields. The septic tank enables retention of solids and anaerobic decomposition. The dosing tank with siphons transport a specific volume of effluent from the septic tank to the distribution network. The drainfield drains the septic tank effluent into the native soil where soil microorganisms provide further treatment of the wastes.

1.5 SUBMITTALS

Submit the following in accordance with the Vendor Drawing and Data Requirements section of the Order/Subcontract.

1.5.1 Manufacturer's standard drawings or catalog cuts and data.

A. Fittings, joints and couplings

B. Manhole covers and frames

C. Precast concrete manholes

D. Metal work

E. Siphons

F. Effluent filters

G. Filter fabric material

H. Activated carbon filters

I. Dose counter

1.5.2 Sieve analysis tests in accordance with ASTM D422 for medium sand fill.

1.5.3 Paragraph deleted.

1.5.4 Certification indicating that installation of the sanitary sewer septic tank and drainfields shall be completed by a contractor certified by the Benton-Franklin County Health Department in accordance with WAC 246-272-230, Installer requirements.

1.5.5 Submit field inspection and tests reports.

1.5.6 Seller shall submit "as built" sewer stubout locations and elevations to the Buyer.

1.5.7 Submit construction acceptance testing (CATs) procedures in accordance with Paragraphs 3.2.2 and 3.2.5 and list of testing equipment for approval.

1.5.8 Installation, Operation, and Maintenance Information

Manufacturer's installation, operation and maintenance data shall be provided for equipment furnished with the septic tank, dosing tank and drainfields. Manufacturer's data, including but not limited to, installation, operations and maintenance information furnished with the equipment, catalog sheets, and brochures shall be furnished for the following items:

A. Activated carbon filters

B. Siphons

C. Effluent filters

D. Drainfield dose counters

Installation, operations and maintenance data shall be furnished in accordance with Section 01730.

PART 2 PRODUCTS

2.1 MATERIALS AND EQUIPMENT

2.1.1 PVC Sewer Pipe and Fittings

2.1.1.1 Gravity Sewer Pipe

PVC sewer collection and septic tank transport line pipe and fittings shall conform to ASTM D3034 and minimum wall thickness for SDR 35 in Table 1. Joints shall conform to ASTM D3212 and gaskets shall conform to ASTM F477.

~~2.1.1.2 Pressure Sewer Pipe~~

~~Discharge piping from the Canister Storage Building Sewage Lift Station shall be Schedule 40 Polyvinyl Chloride (PVC) pipe conforming to the requirements of ASTM D1785 and ASTM D2466.~~

2.1.2 CMP Casing

Where pipeline passes under the railroad, it shall be encased in a galvanized nestable corrugated metal pipe conforming to ASTM A760, Type I. The encasement pipe shall be 14 gauge thick and diameter a minimum of 2 inches larger than the encased pipe. The length of encasement shall be as shown on Contract Drawings. Connections shall be bonded not welded.

2.1.3 Concrete Materials

Concrete materials shall be as specified in Section 03300, Concrete Construction. Concrete shall have a 28-day minimum compressive strength of 4000 psi.

2.1.4 Precast concrete and Manholes

2.1.4.1 Concrete manholes shall consist of precast risers and tops conforming to ASTM C478. For size, details and additional requirements, see Contract Drawings. Base slab can be either precast or cast-in-place concrete construction.

2.1.4.2 Precast manhole cylinders and slabs shall be designed to resist vertical live load due to HS20-44 truck wheel load as specified by American Association of State Highway and Transportation Officials, 1990 Standard Specification for Highway Bridges, Division I, Section 3, Loads. The lateral earth pressure shall be based on at-rest earth pressure coefficient of 0.43. However, the upper 11 feet of manhole from grade shall be designed for a minimum uniform lateral earth pressure of 600 psf caused by soil compaction effect and truck load.

2.1.4.3 The basis for acceptance shall be either rational design per ACI 318 or physical tests per Sections 6 and 11 of ASTM C478.

2.1.4.4 Frames and covers for manholes and cleanouts shall be cast iron conforming to ASTM A48, Gray Iron Castings, Class 30C or better, extra heavy duty type for HS20-44 truck traffic.

2.1.4.5 Manhole steps or rungs shall be 1/2 inch diameter steel conforming to ASTM A36. All steps/rungs shall be encapsulated in copolymer polypropylene plastic after fabrication. Rungs shall be firmly set in place in the concrete walls in accordance with the manufacturer's requirements. Rungs or steps shall be uniformly spaced on 12 inch center and vertically aligned. Manhole steps shall be type PS2-PF Manhole Step as manufactured by M.A. Industries, Inc. or approved equal.

2.1.5 Septic and Dosing Tank

Septic and dosing tanks shall be constructed of reinforced concrete, 4000 psi 28-day minimum compressive strength, and as detailed on the Contract Drawings and per Specification Section 03300, Concrete Construction.

2.1.5.1 Effluent filters shall be provided between the dosing tank inlet and secondary chamber of the septic tank. Two (2) effluent filters shall be provided. The effluent filters shall be Orenco Systems, Inc. Model F-1596 or approved equal. Discharge hose size shall be 2-inches in diameter and modulating orifice size shall be 1-inch diameter, two (2) required each filter.

2.1.5.2 Activated carbon filters shall be provided for each of the septic and dosing tank vent pipes. Filters shall be manufactured such that replacement of carbon can occur at the point of installation. Activated carbon filters shall be manufactured by Orenco Systems, Inc. or approved equal.

2.1.5.3 A dose counter/indicator shall be provided at each drainfield to count the number of doses. The dosing indicators shall be mounted in Type 3R (NEMA 250) cabinets at the locations shown on the construction drawings. Dose counter/indicators shall be

battery operated and shall be an Orenco Systems, Inc. "Siphon Sitter II" or approved equal.

Dose counter assembly shall be placed within a 21" diameter X 27" (min. height) ribbed PVC riser complete with fiberglass lid with stainless steel bolts and gaskets as manufactured by Orenco Systems Inc., or approved equal.

2.1.6 Siphons

Siphons for dosing tank shall be of size indicated on the Contract Drawings and shall be automatic dosing siphon Miller Standard or equal.

2.1.7 PVC Manifold and Lateral Pipe and Fittings

2.1.7.1 All PVC piping and fittings for drainfield, manifold and lateral (drainage) lines, including standard and perforated, shall be Schedule 40 polyvinyl chloride (PVC) pipe conforming to the requirements of ASTM D1785, Type 1 and Grade 1.

2.1.7.2 Perforations of the lateral lines shall be 3/16 inch diameter at 3 foot centers in a single row along the pipe as indicated on the Contract Drawings.

For permanent positioning after testing, the laterals shall be rotated such that the middle and end perforations (orifices) shall be located in the 12 o'clock position. All other perforations shall be in the invert or downwards (6 o'clock) position.

2.1.7.3 The monitoring ports shall be 4 inch polyvinyl chloride (PVC) pipe, Schedule 40 with 1/2 inch perforations at 6 inch spacing and wrapped with filter fabric.

2.1.8 Medium Sand Fill

Medium sand fill material shall be in accordance with ASTM C-33, Specification for Fine Aggregate. A maximum of 45% shall pass any one sieve and be retained on the next sieve. Fineness modulus, which is the sum of the cumulative percentage retained by each sieve in the sieve analysis divided by 100, shall be between 2.3 and 3.1. Seller shall furnish to the Buyer a sieve analysis of the medium sandfill material prior to placement.

2.1.9 Filter Aggregate

The filter aggregate used in the construction of drainfield shall be washed gravel free of dust, fines and dirt. The dimensions of the rock shall vary from 3/4 to 1 1/2 inch, measuring the longest dimension. Gravel shall be covered by filter fabric, as detailed on the Contract Drawings.

The rocks shall be durable and resistant to slaking and dissolution. The rocks shall have hardness of 3 or greater on the Moh's scale of hardness. Crushed limestone shall not be used. Seller shall furnish to the Buyer a sieve analysis of the filter aggregate material for approval prior to placement.

2.1.10 Filter Fabric

Filter fabric shall be a light weight non woven subsurface drainage fabric separating the drainfield filter aggregate from the over burden soil backfill layer. The filter fabric material shall cover the full width and length of the drainfield to the limits indicated on the drainages. Overlap at edges shall be a minimum of 12-inches. Filter fabric material shall have a weight of 4-ounces per square yard or less and shall be Reemay "Typar 3401" or approved equal.

2.1.11 Coating

All exterior concrete surfaces of the septic tank, dosing tank and manholes shall be coated with a single coat of bituminous mastic such as Bitumastic 50 by Carboline Company or equal.

2.1.12 Drainfield Valves

Drainfield valves shall be Class 125 flat faced flanged, nonrising stem, cast iron, AWWA C509 resilient seated gate valves, Clow R/W Resilient Wedge Valve or equal. Gate valves shall be for buried service with 2-inch operating nuts.

2.1.12.1 Gaskets

Class 150 ring type, red rubber 1/8" thick. Sepco No. 20 or equal.

2.1.12.2 Bolting

Machine bolt, galvanized, heavy hex head, ASTM A307 Grade B with one galvanized heavy hex nut, ASTM A563, Grade A.

2.1.12.3 Thread Compound (Flange Bolts)

Commercial anti-seize compound, Never-seez regular grade or equal.

2.2 **FABRICATION AND MANUFACTURE**

The fabrication and manufacture of the precast concrete manholes shall be in accordance with ASTM C478.

PART 3 EXECUTION

3.1 INSTALLATION, APPLICATION AND ERECTION

3.1.1 Earthwork

Earthwork requirements for excavation and backfill, including bedding for pipe trenches shall be in accordance with Section 02220, Excavation and Backfill.

3.1.2 Pipe Laying and Jointing

Inspect each pipe and fitting before and after installation; replace those found defective and remove from site. Provide proper equipment for lowering sections of pipe into trenches. Lay pipe with the bell ends in the upgrade direction. Adjust spigots in bells to provide a uniform space all around. Blocking or wedging between bells and spigots will not be permitted. At the end of each work day, close open ends of pipe temporarily.

3.1.3 Installation of PVC Sewer Pipe

Install pipe and fittings in accordance with the requirements of UBPPA UNI-B-5 and Contract Drawings. Joints with gaskets shall be made in accordance with the requirements of UBPPA UNI-B-3 for assembly of joints. Joints to other pipe materials shall be in accordance with the recommendations of the plastic pipe manufacturer. Sewer pipe shall be laid true to line and grade per construcition drawings. Any as observed by sighting along the pipeline shall be correct within ± 3/8".

3.1.4 Installation of PVC Septic System Manifold and Lateral Piping

Install pipe and fittings as shown on the construction drawings. Except as noted, all joints shall be solvent cemented in accordance with ASTM D2855.

3.1.5 Pipeline Beneath Road and Railroad

Bored or jacketed installation under existing road or railroad is not permitted without Buyer's approval of the Seller's proposed method.

3.1.6 Concrete Work

Cast-in-place concrete work shall be performed in accordance with Section 03300, Concrete Construction.

3.1.7 Manhole Construction

Construct base slab of cast-in-place concrete or use precast concrete base section. Make inverts with a smooth-surfaced semi-circular bottom conforming to the inside contour of the adjacent sewer sections. For changes in direction of the sewer and entering branches into the manhole, make a circular curve in the manhole invert of as large a radius as manhole size will permit. For cast-in-place concrete construction, either pour bottom slabs and walls integrally or key and bond walls to bottom slab. Make joints between concrete manholes and pipes entering manholes as shown on Contract Drawings.

3.1.8 Frames and Covers

The frames and covers shall be set such that the top of the cover is set at elevations specified on the Contract Drawings. The surrounding surface, paved or unpaved, shall be prepared as indicated on the Contract Drawings.

3.1.9 Septic and Dosing Tanks

Construct septic and dosing tanks including manholes in accordance with the referenced material, specifications and the Contract Drawings. Install siphons and effluent filters in accordance with manufacturer's instructions. Concrete construction shall conform to Specification Section 03300. Coatings shall be per Paragraph 2.1.11.

3.1.10 Drainfields

The area for the perforated drainage pipes and medium sand fill shall be carefully excavated to the width and depth required to permit the pipe to be laid to the proper grade and placement of fill as shown on the Contract Drawings. The area shall not be excavated when the soil is wet enough to smear or compact easily. All smeared or compacted surfaces shall be raked to a depth of 1 inch and loose material removed before the medium sandfill material is placed. The depth of excavation for the drainfields shall penetrate into State of Washington Department of Health soil classification Type 1 soil. The Buyer shall approve the depth and extent of the excavation prior to the installation of drainfield materials. Medium sandfill material and filter aggregate shall not be compacted. Lay perforated pipe with the majority of perforations in the upwards (12 o'clock) position for testing. After testing the laterals shall be rotated 180-degrees so that the majority of perforations are in the downwards (6 o'clock) position. Each section of drainage pipe shall have a firm bearing throughout its length. Perforated pipe sections shall be joined with solvent-cement joints. All junctions and bends shall be made with fittings of standard manufacture, and suitable caps, plugs,

or flanges shall be provided and installed to close ends of pipes. Pipe that is out of alignment or shows signs of settlement shall be relaid as required to obtain proper alignment. The top of the aggregate bedding above the drainage pipe shall be covered with filter fabric in accordance with Paragraph 2.1.10 to prevent the aggregate from clogging. The drainfield area shall then be backfilled in accordance with Specification Section 02220, Excavation and Backfill except that no compaction shall be required.

3.1.11 Coatings for Underground Metallic System Components

All metallic components (e.g., valves, flanges, couplings, etc) in underground service shall be protected from exterior corrosion per Specification Section 16640.

3.2 FIELD QUALITY CONTROL

3.2.1 Tests and Inspections

The Buyer or his representative will conduct field inspections and witness field tests specified in this section. The Seller shall perform field tests and provide labor, equipment, and incidentals required for testing. The Seller shall be able to produce evidence, when required, that each item of work has been constructed in accordance with the drawings and specifications.

The Seller shall notify the appropriate review agency for required inspections in accordance with WAC 246-272-190, Inspection. A schedule for inspection and testing shall be agreed upon prior to commencement of the work.

3.2.2 Tests for Pipelines

Check each straight run of pipeline for gross deficiencies by holding a light in the pipeline at a manhole. The light shall be observed through the pipeline when viewed at the adjoining end of line. Correct the alignment of pipeline when tests show the deviation from straight run or deformations in the pipe.

3.2.2.1 Leakage Tests

Test lines for leakage by exfiltration tests. Prior to testing for leakage, backfill trench up to at least lower half of pipe. When necessary to prevent pipeline movement during testing, place additional backfill around pipe sufficient to prevent movement, but leaving joints uncovered to permit inspection. When leakage or pressure drop exceeds the allowable amount specified, make satisfactory correction and retest pipeline section in the same manner. Correct visible leaks regardless of leakage test results.

Obtain approval from Buyer on manner of disposing water used for testing after completion of exfiltration tests.

A. Exfiltration Tests: Perform these tests for sewer lines made of the specified materials, not only concrete, in accordance with ASTM C969. Make calculations in accordance with the Appendix to ASTM C969.

An alternate method for leakage, such as air test, may be used by the Seller with Buyer's approval.

3.2.2.2 Deflection Testing

Perform a deflection test on entire length of installed pipeline on completion of work adjacent to and over the pipeline, including leakage tests, backfilling, compaction, placement of fill, grading, paving, concreting, and any other superimposed loads determined in accordance with ASTM D2412. Deflection of pipe in the installed pipeline under external loads shall not exceed 4.5 percent of the average inside diameter of pipe. Determine whether the allowable deflection has been exceeded by use of a pull-through device or a deflection measuring device.

A. Pull-through Device: This device shall be a spherical, spheroidal, or elliptical ball, a cylinder, or circular sections fused to a common shaft. Circular sections shall be so spaced on the shaft that distance from external faces of front and back sections will equal or exceed diameter of the circular section. Pull-through device may also be of a design promulgated by the Uni-Bell Plastic Pipe Association, provided the device meets the applicable requirements specified in this paragraph, including those for diameter of the device, and that the mandrel has a minimum of 9 arms. Ball, cylinder, or circular sections shall conform to the following:

1. A diameter, or minor diameter as applicable, of 95 percent of the average inside diameter of the pipe; tolerance of plus 0.5 percent will be permitted.

2. Homogeneous material throughout, shall have a density greater than 1.0 as related to water at 39.2°F, and shall have a surface Brinell hardness of not less than 150.

3. Center bored and through-bolted with a 1/4 inch minimum diameter steel shaft having a yield strength of not less than 70,000 pounds per square inch, with eyes or loops at each end for attaching pulling cables.

4. Each eye or loop shall be suitably backed with a flange or heavy washer such that a pull exerted on opposite end of shaft will produce compression throughout remote end.

B. Deflection Measuring Device: Sensitive to 1.0 percent of the diameter of the pipe being tested and shall be accurate to 1.0 percent of the indicated dimension. Deflection measuring device shall be approved prior to use.

C. Pull-Through Device Procedure: Pass the pull-through device through each run of pipe, either by pulling it through or flushing it through with water. If the device fails to pass freely through a pipe run, replace pipe which has the excessive deflection and completely retest in same manner and under same conditions.

D. Deflection Measuring Device Procedure: Measure deflections through each run of installed pipe. If deflection readings in excess of 4.5 percent of average inside diameter of pipe are obtained, retest pipe by a run from the opposite direction. If retest continues to show a deflection in excess of 4.5 percent of average inside diameter of pipe, replace pipe which has excessive deflection and completely retest in same manner and under same conditions.

3.2.3 Concrete Testing

Field Quality Control requirements for concrete work shall be per Specification Section 03300, Concrete Construction.

3.2.4 Excavation and Backfill Testing

Field Quality Control requirements for excavation and backfill shall be as per Specification Section 02220, Excavation and Backfill.

3.2.5 Septic System

3.2.5.1 Test non-perforated pipe lines for leakage by exfiltration tests. Prior to testing for leakage, backfill trench up to at least lower half of pipe. When necessary to prevent pipeline movement during testing, place additional backfill around pipe sufficient to prevent movement, but leaving joints uncovered to permit inspection. When leakage or pressure drop exceeds the allowable amount specified, make satisfactory correction and retest pipeline section in the same manner. Correct visible leaks regardless of leakage test results.

A. Exfiltration Tests

Perform these tests for pipe lines made of the specified materials, not only concrete, in accordance with ASTM C969. Make calculations in accordance with the Appendix to ASTM C969.

3.2.5.2 Prior to backfilling the drainfields and after pressure testing the transport, riser and manifold lines, test the entire system under normal operating conditions. Fill the dosing chamber with clean water until both siphons are activated. Check all drainfield valves for proper position. Observe the performance of each bed. The vertical rise of water from the laterals shall be no less than 2-feet at the most remote orifice and shall vary no more than 15 percent between any two points in a given bed.

3.2.5.3 Make satisfactory correction and retest siphons and pressure distribution systems until operation is satisfactory to Buyer and local Health Department.

3.3 **CLEANING**

Upon completion of work, the Seller shall remove all waste and surplus material resulting from his operations and leave the site clean. Obtain approval from Buyer on manner of disposing water used for cleaning or flushing of sewer system.

END OF SECTION

Enclosure 2

9513334.0433

CERTIFICATION OF INSPECTION AND INSTALLATION OF LARGER ON-SITE SEWAGE SYSTEMS

The following regulation applies: WAC 246-272-080- Within sixty days following the completion of and prior to the use of any project or portion thereof for which plans and specifications have received the approval of the Secretary, certification shall be made to the Secretary and signed by a professional engineer that the project was inspected by him or his authorized agent and that it was constructed in accordance with the plans and specifications approved by the Secretary.

Instructions:

(a) If a project is being completed in stage construction, attach a map and description of project being certified as completed as approved on date given below. (SEE ATTACHED)

(b) As future portions of staged construction projects are completed, each must be certified as required by WAC 246-272-080.

(c) Additional certification forms are available upon request from DOH offices listed below.

U.S. Department of Energy

Name of Sewer System

Environmental Assurance, Permits & Policy
Richland Field Office - M.S. A5-15

Mailing Address

Richland WA 99352

City State Zip

Date Plans and Specifications Approved by Department of Health

March 23, 1993

Date Project or Portions Thereof Completed

APRIL 13, 1994

PROJECT NAME AND DESCRIPTIVE TITLE:

Project B-595 - H.W.V.P. - Septic System Installation, Design Flow 11,820 gpd

The undersigned engineer or his authorized agent has inspected the above-described project, which as to pipe size and type of pipe, valves and materials, and other designed physical facilities has been constructed in accordance with the plans and specifications approved by the Secretary, Department of Health, and in the opinion of the engineer, the installation and testing of the system was carried out in accordance with the specifications approved by the Secretary for the project.

BRUCE R. EISENBISE
STATE OF WASHINGTON
0029374
REGISTERED PROFESSIONAL ENGINEER

4/14/94

BRUCE R. EISENBISE
Engineer

APRIL 14, 1994
Date

EXPIRES 11/25/95

Please return completed form to office checked below.

☐ Seattle Regional Office
Health Services Division
Water Supply and Waste Section
Smith Tower, Mail Stop B 17-9
Seattle, Washington 98104

☐ Olympia Regional Office
Health Services Division
Water Supply and Waste Section
Mail Stop LD-11
Olympia, Washington 98504

☒ Spokane Regional Office

West 924 Sinto
Spokane, Washington 99201

Benton County

HWVP SANITARY SEWER SYSTEM
AS-CONSTRUCTED DESCRIPTION
April 14, 1994

The sanitary sewer system constructed as part of this certification process includes the following items (see Exhibit A attached):

Sewer Collection System

- 1,650 lineal feet of 8" diameter PVC gravity sewer main.
- 7 manholes.

Septic/Dosing Tanks

- 17,700 gallon septic tank.
- 2 effluent filters.
- 1,480 gallon dosing tank.
- 2 - 6" diameter automatic siphons.
- 2 septic and dosing tank vents, one for each tank.

Drainfields

- 3 drainfields including manifold and distribution lateral piping consisting of 2 active fields and 1 standby field.
- 3 dose counters, 1 for each field.
- 6 drainfield monitoring ports, 2 for each field.
- 6" and 8" diameter transport pipelines, 1 pipeline feeding each field.
- 6 drainfield control valves for isolation/rotation of drainfields.
- The septic tank and drainfield systems, as presently constructed, are designed for a flow rate of 11,820 gallons per day.

The HWVP sanitary sewer collection system, as presently constructed, is an abbreviation of the system initially designed to serve the HWVP project. The original designed system provided a network of sewage collection pipelines throughout the site. With the deferral of the HWVP project, only that portion of the collection system serving the TWRS Office Building (TOB), HWVP Guardhouse, and the HWVP Safety Trailer has been built. The personnel that would have operated the HWVP project have been replaced by a similar complement of office personnel that will occupy the TOB building. The design of the septic tank and drainfields systems has not been altered by the deferral of HWVP and have been built according to approved drawings.

The layout of the sanitary sewer collection system as presently constructed is illustrated in Exhibit A attached.

9513334.0435

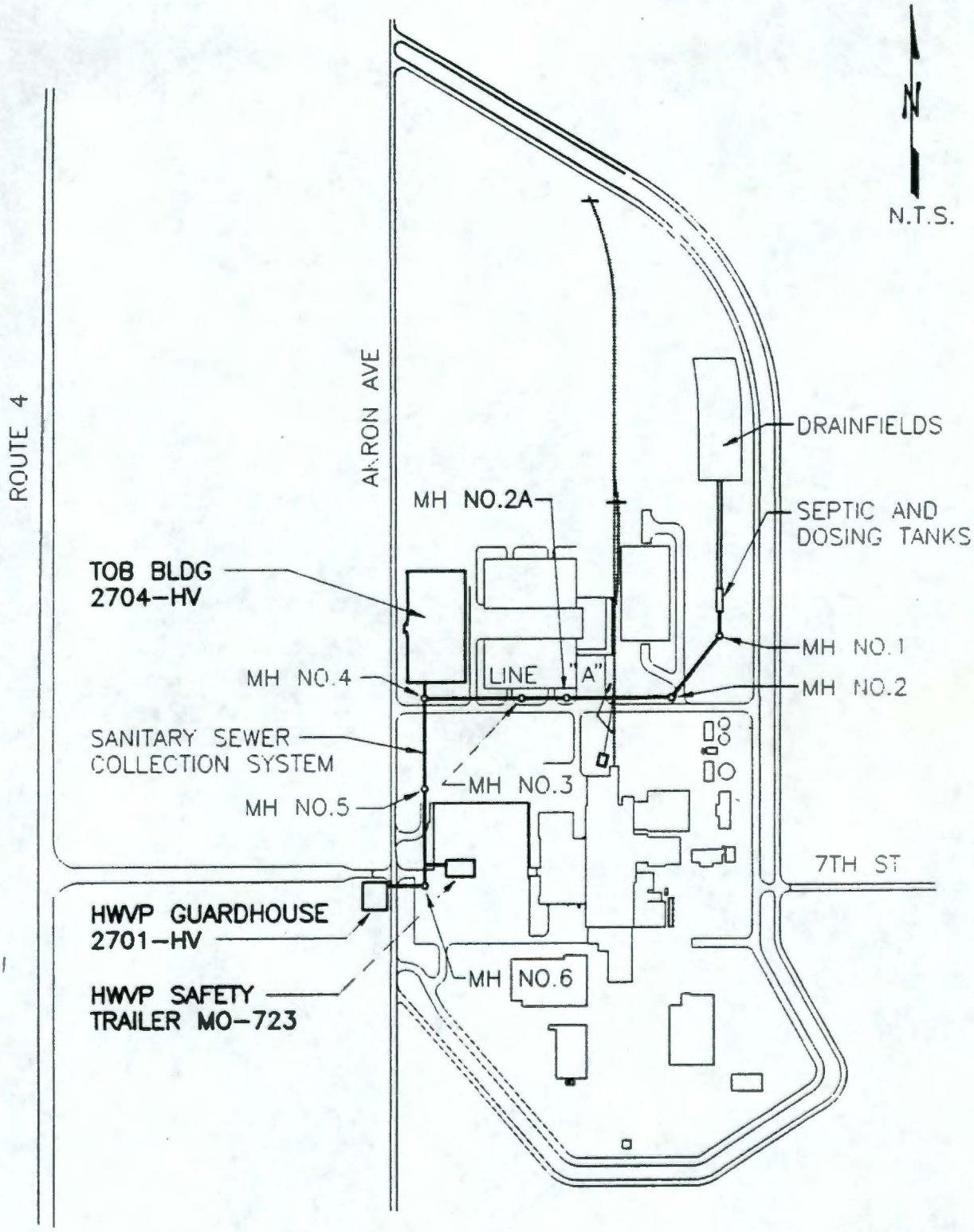

HWVP SANITARY SEWER SYSTEM

FLUOR DANIEL	U.S. DEPARTMENT OF ENERGY HANFORD WASTE VITRIFICATION PLANT	EXHIBIT "A"

WDOHSITE.DWG 4/14/94