0055230

ENGINEERING CHANGE NOTICE

Page 1 of ~~2~~ 3 Jola 6/28

1. ECN 660221

Proj. ECN

2. ECN Category (mark one)	3. Originator's Name, Organization, MSIN, and Telephone No.	4. USQ Required?	5. Date
Supplemental ☐ Direct Revision ☒ Change ECN ☐ Temporary ☐ Standby ☐ Supersedure ☐ Cancel/Void ☐	C. Girres, DFSNW, H1-11, 376-0330	☐ Yes ☒ No	6/13/01
	6. Project Title/No./Work Order No. HFFX0031 112677/A060 2HA00	7. Bldg./Sys./Fac. No. NA	8. Approval Designator ~~NA~~ ED Jcg 6-27-01
	9. Document Numbers Changed by this ECN (includes sheet no. and rev.) HNF-8271, Rev. 0	10. Related ECN No(s). NA	11. Related PO No. NA

12a. Modification Work	12b. Work Package No.	12c. Modification Work Completed	12d. Restored to Original Condition (Temp. or Standby ECNs only)
☐ Yes (fill out Blk. 12b) ☒ No (NA Blks. 12b, 12c, 12d)	NA	NA Design Authority/Cog. Engineer Signature & Date	NA Design Authority/Cog. Engineer Signature & Date

13a. Description of Change

13b. Design Baseline Document? ☐ Yes ☐ No

Editorial changs were made in Sections 2.1, 2.2, and 4.2 to provide clarification. Other minor editorial changes were made throughout the document for formatting and references.

RECEIVED
JUL 31 2001
EDMC

14a. Justification (mark one)	14b. Justification Details
Criteria Change ☐ Design Improvement ☐ Environmental ☒ Facility Deactivation ☐ As-Found ☐ Facilitate Const. ☐ Const. Error/Omission ☐ Design Error/Omission ☐	Comments provided by the Environmental Protection Agency were incorporated.

15. Distribution (include name, MSIN, and no. of copies)
See Attached.

RELEASE STAMP

JUN 29 2001
DATE:
STA: 15
HANFORD RELEASE
ID: 20

A-7900-013-2 (10/97)

A-7900-013-1

ENGINEERING CHANGE NOTICE

1. ECN (use no. from pg. 1): 660221

16. Design Verification Required	17. Cost Impact				18. Schedule Impact (days)	
	ENGINEERING		CONSTRUCTION			
☐ Yes	Additional ☐	$ NA	Additional ☐	$ NA	Improvement ☐	NA
☒ No	Savings ☐	$ NA	Savings ☐	$ NA	Delay ☐	NA

19. Change Impact Review: Indicate the related documents (other than the engineering documents identified on Side 1) that will be affected by the change described in Block 13. Enter the affected document number in Block 20.

SDD/DD	☐	Seismic/Stress Analysis	☐	Tank Calibration Manual	☐
Functional Design Criteria	☐	Stress/Design Report	☐	Health Physics Procedure	☐
Operating Specification	☐	Interface Control Drawing	☐	Spares Multiple Unit Listing	☐
Criticality Specification	☐	Calibration Procedure	☐	Test Procedures/Specification	☐
Conceptual Design Report	☐	Installation Procedure	☐	Component Index	☐
Equipment Spec.	☐	Maintenance Procedure	☐	ASME Coded Item	☐
Const. Spec.	☐	Engineering Procedure	☐	Human Factor Consideration	☐
Procurement Spec.	☐	Operating Instruction	☐	Computer Software	☐
Vendor Information	☐	Operating Procedure	☐	Electric Circuit Schedule	☐
OM Manual	☐	Operational Safety Requirement	☐	ICRS Procedure	☐
FSAR/SAR	☐	IEFD Drawing	☐	Process Control Manual/Plan	☐
Safety Equipment List	☐	Cell Arrangement Drawing	☐	Process Flow Chart	☐
Radiation Work Permit	☐	Essential Material Specification	☐	Purchase Requisition	☐
Environmental Impact Statement	☐	Fac. Proc. Samp. Schedule	☐	Tickler File	☐
Environmental Report	☐	Inspection Plan	☐	NA	☒
Environmental Permit	☐	Inventory Adjustment Request	☐		☐

20. Other Affected Documents: (NOTE: Documents listed below will not be revised by this ECN.) Signatures below indicate that the signing organization has been notified of other affected documents listed below.

Document Number/Revision	Document Number/Revision	Document Number/Revision

21. Approvals

	Signature	Date		Signature	Date
Design Authority			Design Agent		
Cog. Eng.	C. Girres CK Girres	6-27-01	PE		
Cog. Mgr.	C. Girres CK Girres	6-27-01	QA		
QA			Safety		
Safety			Design		
Environ.			Environ.	D. Watson D. Watson	6-27-01
Other			Other		

DEPARTMENT OF ENERGY

Signature or a Control Number that tracks the Approval Signature

01-SFO-079

ADDITIONAL

UNITED STATES ENVIRONMENTAL PROTECTION AGENCY
REGION 10 HANFORD PROJECT OFFICE
712 Swift Boulevard, Suite 5
Richland, Washington 99352

June 8, 2001

Steve Veitenheimer
Director, Spent Fuel Office
U.S. Department of Energy
P.O. Box 550, A4-79
Richland, WA 99352

Subject: EPA Approval of "Sampling and Analysis Plan for Characterization of Cold Vacuum Drying Facilities Wastewater", HNF-8271, Rev. 1, dated June 4, 2001

Dear Mr. Veitenheimer:

The U.S. Environmental Protection Agency has reviewed and approves the subject document. I have appreciated the opportunity to work with its authors during its development. If you have any questions, please contact me at 509-376-9884.

And welcome to the spent nuclear fuel project!

Sincerely,

Larry Gadbois

Larry Gadbois
K Basins Project Manager

Cc: Paul Day, H&N
Cynthia Girres, Duratek
Oscar Holgado, DOE
Carole Rodriguez, IT
Administrative Record, 100-KR-2

Printed on Recycled Paper

HNF-8271
Revision 1

Sampling and Analysis Plan for Characterization of Cold Vacuum Drying Facility Wastewater

C. K. Girres
Duratek Federal Services, Inc., Northwest Operations

Date Published
June 2001

Prepared for the U.S. Department of Energy

Project Hanford Management Contractor for the
U.S. Department of Energy under Contract DE-AC06-96RL1320099RL14047

United States Department of Energy
P.O. Box 550
Richland, Washington 99352

Fluor Hanford
P.O. Box 1000
Richland, Washington

JUN 29 2001
DATE:
STA: 15
HANFORD RELEASE
ID: 20

Janis Aardal — Release Approval
6-29-01 — Date
Release Stamp

TRADEMARK DISCLAIMER

Reference herein to any specific commercial product, process, or service by trade name, trademark, manufacturer, or otherwise, does not necessarily constitute or imply its endorsement, recommendation, or favoring by the United States Government or any agency thereof or its contractors or subcontractors.

This report has been reproduced from the best available copy.

Printed in the United States of America

Total Pages: 20 21 pla 6/29

RECORD OF REVISION	(1) Document Number HNF-8271	Page 1

(2) Title

Sampling and Analysis Plan for Characterization of Cold Vacuum Drying Facility Wastewater

CHANGE CONTROL RECORD

(3) Revision	(4) Description of Change - Replace, Add, and Delete Pages	Authorized for Release		
		(5) Cog. Engr.	(6) Cog. Mgr.	Date
0	(7) EDT 629629, dated 5/24/2001			
1 RS	Editorial changes were made and EPA comments were incorporated. Per ECN 660221	C. Girres CK Girres	C. Girres CK Girres	6-29-01

A-7320-005 (08/91) WEF168

Signature Page

G. L. Eat — 06/12/01

Gerald Eaton, Manager
Spent Nuclear Fuel Project Support
Date

D J Watson — 06/21/01

Dave Watson
Environmental Compliance Officer
Date

T. L. Blackford — 6/12/01

T. L. Blackford, Manager
Waste Services
Date

Mike Hahn — 6/12/01

Mike Hahn
Waste Services QA/QC
Date

Kent Smith — 6/12/01

Kent Smith, Manager
Liquid Waste Processing Facility
Date

CONTENTS

1.0 INTRODUCTION 1
2.0 DATA QUALITY OBJECTIVES 1
2.1 GENERAL INFORMATION 1
2.2 WASTE STREAM DESCRIPTION 2
2.3 CHARACTERIZATION OBJECTIVES 3
2.4 EXISTING CHARACTERIZATION DATA 3
2.5 PARAMETERS AND/OR CONSTITUENTS OF CONCERN TO COMPLETE CHARACTERIZATION 4
2.6 DECISION RULE 5
2.7 SAMPLE COLLECTION STRATEGY 6
2.8 REVIEW OF SAMPLE COLLECTION DESIGN 6
3.0 PROJECT RESPONSIBILITIES AND POINTS OF CONTACT 6
3.1 PROJECT MANAGER 7
3.2 SAMPLING COORDINATOR 7
3.3 ANALYTICAL LABORATORY 7
4.0 SAMPLING METHODS AND REQUIREMENTS 8
4.1 COLLECTION OF SAMPLES 8
4.2 QUALITY CONTROL SAMPLES 8
4.3 EQUIPMENT, SAMPLE CONTAINERS, AND SAMPLE PRESERVATION 8
4.4 SAMPLE IDENTIFICATION AND CHAIN OF CUSTODY 9
4.5 DOCUMENTATION 9
4.6 PROBLEMS OR DEVIATIONS FROM SAMPLING PROCEDURES 9
5.0 SAMPLE ANALYSIS METHODS AND REQUIREMENTS 10
5.1 LABORATORY 10
5.2 ANALYSIS METHODS AND HOLDING TIMES 10
5.3 QUALITY CONTROL 10
5.4 ANALYSIS REPORT 10
5.5 PROBLEMS OR DEVIATIONS FROM ANALYSIS METHODS 10
5.6 UNUSED SAMPLE PORTIONS 11
6.0 DATA EVALUATION 11
7.0 RECORDS 11
8.0 REFERENCES 11

ATTACHMENT A: CVDF SAMPLE POINTS 15

TABLE

Table 1. Sampling and Analysis Requirements 13

LIST OF TERMS

AEA	Alpha Energy Analysis
CERCLA	*Comprehensive, Environmental, Response, Compensation and Liability Act*
CSB	Canister Storage Building
CVDF	Cold Vacuum Drying Facility
DFSNW	Duratek Federal Services, Inc., Northwest Operations
DOE/RL	U.S. Department of Energy, Richland Operations Office
EPA	U.S. Environmental Protection Agency
ETF	Effluent Treatment Facility
FH	Fluor Hanford
GEA	Gamma Energy Analysis
IWTS	integrated water treatment system
IXM	ion exchange modules
LERF	Liquid Effluent Retention Facility
LWPF	Liquid Waste Processing Facilities
MDA	minimum detectable activity
MDL	maximum detectable limit
MCO	multi-canister overpacks
PCB	polychlorinated biphenyl
PQL	Practical Quantification Limit
PWC	process water conditioning
QA	quality assurance
QC	quality control
RCRA	*Resource Conservation and Recovery Act*
RL	U.S. Department of Energy, Richland Operations Office
SAP	Sampling and Analysis Plan
SNF	Spent Nuclear Fuel
TSCA	*Toxic Substances Control Act*
VPS	vacuum purge system
WAC	Washington Administrative Code
WMP	Waste Management Project
WSCF	Waste Sampling and Characterization Facility

1.0 INTRODUCTION

This Sampling and Analysis Plan (SAP) presents the rationale and strategy for sampling and analysis activities to support disposition of water from the Cold Vacuum Drying Facility (CVDF) at the Liquid Effluent Retention Facility (LERF)/Effluent Treatment Facility (ETF). This SAP is required per the U.S. Department of Energy, Richland Operations Office (RL) DOE/RL-99-89, *Remedial Design Report and Remedial Action Work Plan for the K Basins Interim Remedial Action* (RL 1999).

The primary source of water from the CVDF is from the drying of spent nuclear fuel (SNF) in multi-canister overpacks (MCO). Water being sent to the LERF/ETF and not re-circulated back to the K Basins will be managed in accordance with this SAP. Water from the K East and K West Basins ultimately will be removed, pretreated, and transferred to the LERF/ETF. This SAP does not currently address this activity: a separate SAP will be developed or this SAP will be amended to incorporate this portion of the waste stream.

This SAP details the necessary steps to ensure that adequate information is obtained to meet applicable requirements for acceptance of the waste stream at the LERF/ETF. Characterization will be based on a combination of process knowledge and analytical data. Sampling may be reduced once a baseline is established and process knowledge is confirmed. Constituents of concern will be sampled and analyzed as outlined in this SAP.

2.0 DATA QUALITY OBJECTIVES

This section of the SAP provides a summary of the CVDF wastewater (referred to as water in this SAP) characterization and the data needed to determine if the water can be accepted at the LERF/ETF. The process used to determine this information is generally aligned with the 7-step process outlined in U.S. Environmental Protection Agency (EPA) guidance. However, a less involved process was used because the CVDF process generates a consistent water stream that is well within the LERF/ETF waste acceptance criteria.

2.1 GENERAL INFORMATION

Fluor Hanford's (FH) SNF Project and Waste Management Project (WMP) are the primary decision-makers for this characterization effort. Duratek Federal Services, Inc., Northwest Operations (DFSNW), or another qualified contractor, will be utilized to perform sampling. FH Analytical Services has provided input regarding analytical capabilities and will coordinate completion of the analytical activities required per this SAP. Upon completion of sampling and analysis, the SNF Project and WMP Waste Services will evaluate the process knowledge and analysis data and complete the ETF waste profile sheet. The FH WMP Liquid Waste Processing Facilities (LWPF) will review the waste profile and make the final acceptance

decision to the LERF/ETF. RL and EPA staff provided input to the approach and characterization requirements to be finalized in this SAP.

FH is currently the contractor responsible for the work scope in this SAP. This SAP will not be revised if names, performing organizations, or contractors change. The new contractor or organization will assume the responsibilities and requirements in this SAP.

2.2 WASTE STREAM DESCRIPTION

The CVDF provides the required process systems, support equipment, and facilities needed for the conditioning of SNF from the K Basins prior to storage at the Canister Storage Building (CSB). The process water conditioning (PWC) system collects and treats the liquid effluent streams generated by the CVDF process. The PWC system uses ion exchange modules (IXM) and filtration to remove radioactive ions and particulate from the CVDF effluent streams. Water treated by the PWC is collected in a 5,000-gal storage tank prior to subsequent transfer and shipment. The SNF Project has set an administrative limit of 90% capacity for the PWC tank to ensure the tank is emptied well before it is full so MCO production will not be impacted.

The CVDF receives MCOs that are loaded with SNF from the K East and K West fuel storage basin. The MCO is filled with de-ionized, but radioactively contaminated water from the effluent of the K Basin's integrated water treatment system (IWTS). The annulus space between the MCO and the transportation cask is filled with water from the K Basins ion exchange units.

In the initial step of the drying process, the PWC system serves as a vacuum source and provides receiver tanks for the draining of the water in the MCO. During a subsequent step of the drying process, water vapor removed by the vacuum purge system (VPS) and stored in the VPS condenser tank is transferred to the PWC receiver tanks. At the conclusion of the drying process, water from the tempered water system and the cask annulus is transferred to the PWC receiver tanks. Additional sources of water transferred to the PWC receiver tanks are de-ionized water used in training exercises, de-ionized water used to flush piping and vessels, and condensate from the CVDF process bay recirculation heating, ventilation, and air conditioning systems. These additional sources of water are not expected to contribute significantly to the volume or characteristics of the waste stream.

The process of handling each MCO at the CVDF and purging the water in preparation for dry storage will generate approximately 265 gal of radioactively contaminated water. The water is contaminated because some of the 265 gal arrives at the CVDF in contact with the spent fuel. The water is *Comprehensive, Environmental, Response, Compensation and Liability Act* (CERCLA) waste. Based on chemical characterization data of the sludge and PWC receiver tank water, as well as process knowledge, the water is not regulated as dangerous waste or as a polychlorinated biphenyl (PCB) remediation waste. Initially, one MCO was processed per month at the CVDF and this rate is expected to increase to a rate of 10 per month. Processing is currently scheduled to continue until 2004. A total estimated volume of 106,000 gal of water (approximately 30 tankers) will be generated.

2.3 CHARACTERIZATION OBJECTIVES

Data obtained from the sampling and analysis activities will be used to determine if the waste stream meets the LERF/ETF acceptance requirements. Initial sampling and analysis from the first PWC receiver tank of water generated has been performed to assist in determining constituents of concern for future shipments. The initial sampling and analysis requirements are provided in Table 1. Constituents of concern were determined from the existing process knowledge and initial data that will serve as the basis for future sampling and analysis.

2.4 EXISTING CHARACTERIZATION DATA

Although additional characterization data were obtained for the first PWC receiver tank of water generated at the CVDF, extensive data on the source and nature of the water already exists. These data include radiological data from periodic sampling done on the K Basin water, sludge characterization data, PCB data, radiological data from routine process sampling, and process knowledge.

The source-term for all of the radionuclides that could reasonably be expected in the K Basins is from N Reactor fuel and associated activation products. Physical and chemical processes occurring as the basin water contacted the fuel are known to alter the ratios of various radionuclides. A summary of the existing radiological data is found in HNF-6495, *Sampling and Analysis Plan for K Basins' Debris* (FH 2001b).

A waste designation was recently completed on the sludge from the K Basins. The results demonstrated that the sludge was not a dangerous waste. The rationale for this designation is documented in RL Letter 01-SFO-051, "Completion of Waste Designation for K Basin Sludge Waste Streams" and Letter FH-0100738, "Completion of Waste Designation for K Basin Sludge Waste Streams." Neither the fuel nor the sludge is regulated under Washington Administrative Code (WAC) 173-303. Therefore, the basin water is not considered a dangerous waste just because it has been in contact with the fuel and the sludge. The conclusion that the water is not a dangerous waste and, therefore, not subject to WAC 173-303 is further substantiated by process knowledge of K Basin and CVDF operations and on data recently obtained from the analysis of water from the CVDF process water conditioning tank (see Table 1).

Sludge and water from a number of locations in the K East and K West Basins have been sampled and analyzed for PCBs. Sludge from the K East floor, K East Weasel Pit, and K East canisters contained Aroclor 1254. Sludge from the K West canisters contained Aroclors 1016/1242, 1221, 1248, 1258, and 1260. The complete results are documented in HNF-1728, *Analysis of Sludge from Hanford K West Basin Canisters* (FH 1998) HNF-2367, *Supplementary Information on K-Basin Sludges*, (FH 1999) and HNF-SP-1201, *Analysis of Sludge from Hanford K East Basin Canisters* (FH 1997).

At the CVDF, routine radiological process sampling is performed on the PWC receiver tanks, IXM inlet, and IXM outlet to determine the radionuclide content of the water entering the

PWC system receiver tanks and to trend the radionuclide inventory of the IXMs. Samples are analyzed for Cs-137 and Total Alpha.

Volatile organics are not present in the K Basins based on chemical characteristics and administrative controls. Any chemicals that historically could have been used would have volatilized and would no longer be present. Currently, administrative controls limit the introduction of chemicals in the basin water, including administrative procedure, AP-OP-2-025, "K Basin Water Quality Control," Section 6.4, "Review of Chemical Products Used in the Basins." Operations support personnel review all chemical products prior to their use in the basin areas that have the potential to leak or spill into the basins to determine if there would be potential adverse effects prior to its use. Operations support personnel also approve all chemical products that are used in construction, maintenance, and operational activities to ensure that they will not adversely impact basin water chemistry. Because no volatile organics are present in the basins, volatile organic analysis and semi-volatile organic analysis will not be required to characterize the waste.

The LWPF requires that the water be filtered to avoid accumulation of solids in the tanker truck and the LERF Basins. To ensure the CVDF meets this acceptance criterion, a 5-micron filter was constructed in the transfer line from the storage tank to the tanker. When water is ready to be transferred to the tanker, valves will be opened to allow the water to flow through the 5-micron filter. Because this prevents the accumulation of solids in the tanker truck, sampling for total suspended solids will not be required to characterize the waste.

2.5 PARAMETERS AND/OR CONSTITUENTS OF CONCERN TO COMPLETE CHARACTERIZATION

By comparing the initial set of the CVDF PWC receiver tank water analysis results to the LWPF waste acceptance criteria, the constituents of concern were determined. All radionuclides were less than 5% of the most stringent radionuclide waste acceptance criteria (the LERF source term limits). The total organic carbon was less than the quantification limit, confirming that there is little or no organic material in the water. The ionic species (metals, fluoride, chloride, etc.) were also very low. All the PCB analyses were below the quantification limit. Additional data are needed to ensure the waste does not exceed the *Toxic Substances Control Act* (TSCA) limit of 0.5 ug/L for unrestricted disposal of wastewater (40 CFR 761.79[b][1][iii]). This requirement is imposed because ETF is not currently a TSCA facility. The limit may be raised in the future if the ETF's regulatory status changes.

Based on these results, further routine characterization activities will consist only of radionuclide and PCB sampling.

Constituents	Rationale
H-3	Tritium is a major contributor to overall curie content.
Co-60, Cs-137	Significant gamma emitters
Sr-90	Significant beta emitter
Np-237, Pu-238, Pu-239/240, Pu-241, Am-241	Significant alpha emitters
PCBs - Aroclors 1016/1242, 1221, 1232, 1248, 1254, and 1260	Confirm process knowledge

2.6 DECISION RULE

The decision will be made on the following basis:

If the concentration of constituents in the PWC tank meets the LERF/ETF waste acceptance criteria, the waste is acceptable for transfer to LERF/ETF. The waste acceptance process evaluates the waste against the following criteria:

- Is filtration required to remove solids present in the waste?
- Is the waste compatible with the LERF/ETF materials of construction?
- Are the concentrations of the constituents in the waste within the treatability limits in the approved influent constituent list required by the State Waste Discharge Permit?
- Are the concentrations and quantities of radionuclides in the waste within the limits in LERF/ETF safety documentation?
- Are the concentrations and quantities of radionuclides and toxic chemicals in the waste within the limits of air emission documents?
- If the waste is designated as dangerous waste, are the waste codes included in the Hanford Facility Dangerous Waste Permit?

Further information about waste acceptance at the LERF/ETF is available in HNF-3172 *Liquid Waste Processing Facilities Waste Acceptance Criteria* (FH 2001a). Several of the criteria involve evaluating the CVDF waste in conjunction with other wastes received at LERF/ETF. For example, air emissions requirements limit the annual throughput of radionuclides at LERF and ETF, so all radionuclides from all waste streams for the year must be considered in the evaluation.

In addition to the waste acceptance criteria discussed above, LERF/ETF cannot receive TSCA waste. If the PCB concentration in the water is below 0.5 ug/L, it is not PCB remediation waste and the water is acceptable for transfer to the LERF/ETF. If all Aroclors are less than the

Practical Quantitation Limit (PQL) defined in Table 1, the value of the highest PQL will be used to represent the total PCB concentration. If any Aroclors are reported above their respective PQL, the sum of all the detected Aroclors will be used to represent the total PCB concentration.

2.7 SAMPLE COLLECTION STRATEGY

One representative sample has been taken from the CVDF PWC tank. This sample had radionuclide levels less than 5% of the most stringent LERF/ETF waste acceptance criteria. It is expected that, given the consistency of the waste generation process, additional samples will give similar results. Therefore, at least one additional sample of the CVDF water will be analyzed for radionuclides and PCBs to confirm the water is of similar quality and is adequately characterized. An evaluation of the results will be used to determine if additional sampling is required.

Additional verification sampling will be performed when a significant portion of water being generated by the CVDF process originates from processing of K East fuel. At least one sample of the CVDF water will be analyzed for radionuclides and PCBs to confirm the water is of similar quality and is adequately characterized. An evaluation of the results will be used to determine if additional sampling is required.

Process control sample results for Total Alpha and Cs-137 will be routinely to determine if any significant changes in water quality have occurred. If a significant change in water quality should occur, the constituents of concern will be determined and additional sampling and analysis will be performed.

2.8 REVIEW OF SAMPLE COLLECTION DESIGN

Sample results from the CVDF PWC tank will be provided to the SNF Project, WMP Waste Services, and WMP LWPF personnel. Any shifts/trends will be evaluated to determine if expansion or modification of the constituents of concern is required.

The LERF/ETF RCRA permit requires reevaluation of the waste if LWPF believes the waste process has changed. Reevaluation of required sampling and analysis will occur when a significant portion of water being generated by the CVDF process originates from processing of K East fuel or if any change should occur in the CVDF processes that could affect water quality.

3.0 PROJECT RESPONSIBILITIES AND POINTS OF CONTACT

This section establishes roles and responsibilities for the sampling and analysis effort.

3.1 PROJECT MANAGER

The project manager is designated by the SNF Project Director, Project Support and has the following responsibilities under this SAP:

- Provide resources to complete activities defined by this SAP
- Resolve any questions or problems communicated by the sampling coordinator
- Document and resolve deviations from this SAP.

3.2 SAMPLING COORDINATOR

The sampling coordinator is designated by the project manager and has the following responsibilities under this SAP:

- Ensure that sampling activities, including documentation and transportation to the laboratory, are performed in accordance with this SAP
- Address any questions regarding this SAP to the project manager prior to beginning sampling activities
- Maintain the primary interface with SNF, analytical laboratory, and the LWPF
- Notify the project manager of any deviations from this SAP that affect the data quality as soon as possible for resolution
- Transmit laboratory data to all data users.

3.3 ANALYTICAL LABORATORY

The analytical laboratory contracted by the SNF Project has the following responsibilities under this SAP:

- Receive and log in samples
- Analyze samples by the methods specified by this SAP and any specific client agreement, including meeting specified holding times
- Address any questions regarding the analyses to the sampling coordinator as soon as possible for resolution
- Dispose of any unused sample.

4.0 SAMPLING METHODS AND REQUIREMENTS

This section describes the methods for obtaining representative samples and the applicable documentation and quality control (QC) requirements.

4.1 COLLECTION OF SAMPLES

The SNF Project operations personnel will manage sampling activities. The DFSNW sampling organization will perform the sampling. DFSNW will direct sampling in accordance with procedure ES-SSPM-001, Section 7.1, "Drum Sampling/Containerized Material Sampling," as amended (DFSNW 1998). Alternatively, another contractor with equivalent procedures may be utilized. A representative sample will be obtained using the sample collection strategy described below.

The CVDF PWC system is described in SNF-3082, *Cold Vacuum Drying Facility Process Water Conditioning System Design Description* (FH 2000). A schematic showing the system and sampling points is included in Attachment A.

The CVDF has two different areas for sampling storage tank water prior to the water being transferred to the tanker truck. The first area is to sample from the re-circulation line of the storage tank located in the PWC room. Sample point PWC-QD-065 (see Attachment A) is located on the outlet of the re-circulation pump and is a grab sample point. A ball valve controls the flow for filling the sample bottles. The second area is to sample from the transfer line to the tanker using either the inlet to the 5-micron filter assembly, PWC-V-072 (see Attachment A) or from the outlet of the 5-micron filter, PWC-V-073 (see Attachment A). Water in the bulk water storage tank is re-circulated to provide a homogenous sample of the tank contents. Any of the three sampling points can be used.

4.2 QUALITY CONTROL SAMPLES

As a minimum, a quality assurance (QA)/QC field duplicate will be sent to the laboratory for each sampling campaign of the PWC tank and whenever rebaselining or verification is necessary.

4.3 EQUIPMENT, SAMPLE CONTAINERS, AND SAMPLE PRESERVATION

The DFSNW, or other approved contractor will provide sample collection materials (i.e., containers, labels, tools, etc.). Sample bottle requirements are specified in Table 1. All containers, except those used for radiochemical analysis, must be Level-1 protocol per manufacturer for *Resource Conservation and Recovery Act* (RCRA) samples. Sample equipment must be new or cleaned in accordance with DFSNW procedure ES-SSPM-001, Section 2.5, "Laboratory Cleaning of Sampling Equipment," as amended (DFSNW 1998), or equivalent procedure.

Samples must be preserved as specified in Table 1. Samples shall be submitted to the laboratory promptly to meet holding times. The laboratory will be provided 24-hour advance notification of the sampling schedule whenever possible.

4.4 SAMPLE IDENTIFICATION AND CHAIN OF CUSTODY

The sampling organization will manage the samples in accordance with the WMP Procedure, WMP-200, Section 3.12, "Chain of Custody for Environmental Media and Waste Samples," or equivalent procedure, and DFSNW procedure ES-SSPM-001, Section 1.1, "Chain of Custody," as amended (DFSNW 1998), or equivalent procedure.

The sample collection organization will be responsible for initiating and maintaining the chain of custody from the time of sampling until transfer of custody. All samples will include a sample-screening vial that contains a representative portion of the sample for radiological screening.

4.5 DOCUMENTATION

A record of the sampling activities will be documented in a bound, sequentially numbered field logbook. The logbook must describe the general location of the sampling activity, type (matrix) of material sampled, sample method, sample source, sample number (corresponding to the sample label), date and time of sample collection, and any problems encountered or deviations from this SAP. Field generated notes can be attached (e.g., tape) to the field logbook. Drawings, diagrams, and photographs should be used when needed to clearly describe the sampling event. Each page in the logbook will be signed and dated by the person making the logbook entry.

Any field measurements (e.g., radiological surveys, industrial hygiene survey measurements) will be documented and maintained by the SNF Project.

On completion of the sampling project, a photocopy of the chain of custody form(s) and field logbook pages pertaining to the sampling activity will be provided to the sampling coordinator.

4.6 PROBLEMS OR DEVIATIONS FROM SAMPLING PROCEDURES

Any problems encountered during sampling or deviations from this SAP must be documented in the field logbook and communicated to the sampling coordinator as quickly as possible. Where a problem or deviation could affect the usability of the data, the sampling coordinator will contact the project manager to determine the appropriate action to be taken (e.g., discontinue sampling, modify the sampling procedure, or continue sampling).

5.0 SAMPLE ANALYSIS METHODS AND REQUIREMENTS

This section describes sample analysis methods and requirements for the selected laboratory. Client agreements will be used with the laboratory as necessary to establish any laboratory-specific requirements.

5.1 LABORATORY

The Waste Sampling and Characterization Facility (WSCF) is currently the laboratory contracted to perform the required analysis. An alternate laboratory may be used provided that the laboratory has an approved QA program that is based on and meets the requirements of DOE/RL 96-68, *Hanford Analytical Services Quality Assurance Requirements Document* (RL 1996).

5.2 ANALYSIS METHODS AND HOLDING TIMES

Samples shall be analyzed by the methods identified in Table 1. The laboratory shall meet the holding times specified in Table 1.

5.3 QUALITY CONTROL

The contracted laboratory will conduct all sample analyses utilizing the EPA or Washington Department of Ecology accepted QC practices. An approved QA program plan must be in place that is based on and implements the requirements of RL (1996).

5.4 ANALYSIS REPORT

The laboratory shall provide the final analysis report within 30 calendar days from samples arriving at the laboratory, unless a quicker turnaround is negotiated on a case-by-case basis. Data will be qualified in the narrative or by using standard laboratory data qualifiers.

5.5 PROBLEMS OR DEVIATIONS FROM ANALYSIS METHODS

Any problems during analysis or deviations to the analysis method, including holding time requirements, must be communicated to the sampling coordinator as quickly as possible. The analytical laboratory contact shall contact the sampling coordinator to determine the appropriate action to be taken (e.g., discontinue analysis, use an alternate procedure, continue analysis despite problems). Problems or deviations and actions taken will be documented and provided to the sampling coordinator.

5.6 UNUSED SAMPLE PORTIONS

All unused portions of samples will be disposed of by the laboratory staff after the final results have been reviewed and accepted by the sampling coordinator and LWPF.

6.0 DATA EVALUATION

The SNF Project and WMP Waste Services will evaluate the data collected under this SAP and complete the ETF waste profile based on the results. Analysis results will be forwarded to the WMP LWPF. The LWPF acceptance personnel will evaluate the data collected under this SAP to ensure that the LERF/ETF waste acceptance criteria are met and give final approval for acceptance of the waste stream.

7.0 RECORDS

All records generated during this sampling and analysis campaign (e.g., field notes, radiological surveys, etc.) will be managed per project Records Inventory Disposition Schedule.

8.0 REFERENCES

DFSNW, 1998, *Sampling Services Procedure Manual*, DFSNW-SSPM-001, Duratek Federal Services, Inc., Northwest Operations, Richland, Washington.

FH, 1997, *Analysis of Sludge from Hanford K East Basin Canisters*, HNF-SP-1201, Rev. 0, Fluor Hanford, Richland, Washington.

FH, 1998, *Analysis of Sludge from Hanford K West Basin Canisters*, HNF-1728, Rev. 0, Fluor Hanford, Richland, Washington.

FH, 1999, *Supplementary Information on K-Basin Sludges*, HNF-2367, Rev 0, Fluor Hanford, Richland, Washington.

FH, 2000, *Cold Vacuum Drying Facility Process Water Conditioning System Design Description,* SNF-3082, Rev. 2.

FH, 2001a, *Liquid Waste Processing Facilities Waste Acceptance Criteria*, HNF-3172, as amended, Fluor Hanford, Richland, Washington.

FH, 2001b, *Sampling and Analysis Plan for K Basins' Debris,* HNF-6495, Rev. 1, Fluor Hanford, Richland, Washington.

Letter, P. G. Loscoe, RL to D. R. Sherwood, EPA and M. A. Wilson, WDOE, "Completion of Waste Designation for K Basin Sludge Waste Streams", 01-SFO-051, dated March 27, 2001.

Letter, J. H. Wicks, FH to P.G. Loscoe, RL, "Completion of Waste Designation for K Basin Sludge Waste Streams", FH-0100738, dated February 7, 2001.

RL, 1996, *Hanford Analytical Services Quality Assurance Requirements Document*, DOE/RL-96-68, U.S. Department of Energy, Richland Operations Office, Richland, Washington.

RL, 1999, *Remedial Design Report and Remedial Action Work Plan for the K Basins Interim Remedial Action,* DOE/RL-99-89, Rev. 0, U.S. Department of Energy, Richland Operations Office, Richland, Washington.

WAC 173-303, *Dangerous Waste Regulations*, Washington State Department of Ecology, Olympia, Washington, amended June 2000.

WMP-200, *Chain of Custody for Environmental Media and Waste Samples*, Section 3.12, Rev. 0, Waste Management Project.

Table 1. Sampling and Analysis Requirements

Compound	Container	Preservative	Maximum Holding Time	MDL/MDA	PQL	Method
RADIONUCLIDES						
H-3	Glass		180 Days	400 pCi/L		Liquid Scintillation
Tc-99				5 pCi/L		Liquid Scintillation
C-14	Glass		180 Days	4 pCi/L		Liquid Scintillation
I-129				25 pCi/L		Gamma Energy Analysis (GEA)
Co-60	Plastic	HNO_3; pH < 2	180 Days	50 pCi/L		GEA
Sr-90				2 pCi/L		Beta Counting
Nb-94				50 pCi/L		GEA
Ru-103				50 pCi/L		GEA
Ru-106				140 pCi/L		GEA
Sn-113				50 pCi/L		GEA
Cs-134				50 pCi/L		GEA
Cs-137				50 pCi/L		GEA
Ce-144				200 pCi/L		GEA
Eu-154				50 pCi/L		GEA
Eu-155				50 pCi/L		GEA
Ra-226	Plastic	HNO_3; pH < 2	180 Days	3 pCi/L		Alpha Energy Analysis (AEA)
Np-237				2 pCi/L		AEA
Pu-238				2 pCi/L		AEA
Pu-239/240				2 pCi/L		AEA
Pu-241				20 pCi/L		Calculated from Pu-239
Am-241				0.18 pCi/L		AEA
Cm-244				0.17 pCi/L		AEA

Compound	Container	Preservative	Maximum Holding Time	MDL/MDA	PQL	Method
INORGANICS						
Bromide	Glass or Poly	Cool to 4 °C by refrigeration	28 days Nitrate, 48 hours Nitrite, 48 hours	0.1 mg/L	0.49 mg/L	EPA-600, 300.0
Chloride				0.04 mg/L	0.15 mg/L	
Fluoride				0.01 mg/L	0.1 mg/L	
Nitrate (as N)				0.02 mg/L	0.1 mg/L	
Nitrite (as N)				0.02 mg/L	0.1 mg/L	
Sulfate				0.2 mg/L	0.74 mg/L	
Phosphate				0.08 mg/L	0.24 mg/L	
METALS						
Aluminum	Glass or Plastic	HNO_3; pH < 2	180 days; Mercury, 28 days	28 ug/L	280 ug/L	6010
Antimony				0.5 ug/L	5 ug/L	EPA-600, 200.8
Arsenic				0.4 ug/L	4 ug/L	EPA-600, 200.8
Barium				4.4 ug/L	44 ug/L	6010
Cadmium				0.1 ug/L	1 ug/L	EPA-600, 200.8
Calcium				23 ug/L	230 ug/L	6010
Chromium				0.3 ug/L	3 ug/L	EPA-600, 200.8
Copper				4.4 ug/L	44 ug/L	6010
Iron				21 ug/L	210 ug/L	6010

Compound	Container	Preservative	Maximum Holding Time	MDL/MDA	PQL	Method
Lead				1.2 ug/L	12 ug/L	EPA-600, 200.8
Magnesium				61 ug/L	610 ug/L	6010
Manganese				4.4 ug/L	44 ug/L	6010
Mercury				0.1 ug/L	1 ug/L	EPA-600, 200.8
Nickel				11 ug/L	111 ug/L	6010
Potassium				655 ug/L	6550 ug/L	6010
Selenium				0.3 ug/L	3 ug/L	EPA-600, 200.8
Silicon				22 ug/L	220 ug/L	6010
Silver				4.4 ug/L	44 ug/L	6010
Sodium				32 ug/L	320 ug/L	6010
Uranium				0.1 ug/L	1 ug/L	EPA-600, 200.8
Vanadium				5.6 ug/L	56 ug/L	6010
Zinc				4.4 ug/L	44 ug/L	6010

Compound	Container	Preservative	Maximum Holding Time	MDL/MDA	PQL	Method
ORGANICS						
PCBs	Amber Glass	Cool to 4 °C by refrigeration	7 days to extract/40 days after ext.			
Aroclor-1016					0.2 ppb	8082
Aroclor-1221					0.4 ppb	8082
Aroclor-1232					0.2 ppb	8082
Aroclor-1242					0.2 ppb	8082
Aroclor-1248					0.2 ppb	8082
Aroclor-1254					0.2 ppb	8082
Aroclor-1260					0.2 ppb	8082
Total Organic Carbon	Amber Glass	H_2S0_4, Cool to 4 °C by refrigeration	28 days		0.3 mg/L	9060
GENERAL CHEMISTRY						
Total Dissolved Solids	Glass or Poly	Cool to 4 °C by refrigeration	7 days		9 mg/L	EPA 160.1
Total Suspended Solids		Cool to 4 °C by refrigeration	7 days		1 mg/L	EPA 160.2
pH			As soon as practical			EPA 150.1
Gross Alpha	Glass	HNO_3; pH < 2	180 Days	3 pCi/L		Proportional Counter
Gross Beta	Glass	HNO_3; pH < 2	180 Days	4 pCi/L		Proportional Counter

Notes:

1. Another method may be substituted, with sampling coordinator concurrence, if the PQL can still be met.
2. Container size will be determined by the laboratory
3. Analytical limits are based on the quality of the CVDF water. Limits can be changed, with prior approval by the sampling coordinator. Reported detection limits will be indicated on the final report.
4. PCBs will be reported down to the MDL. Values on the analytical report for PCBs falling between the MDL and PQL will be J-flagged.

ATTACHMENT A: CVDF SAMPLE POINTS

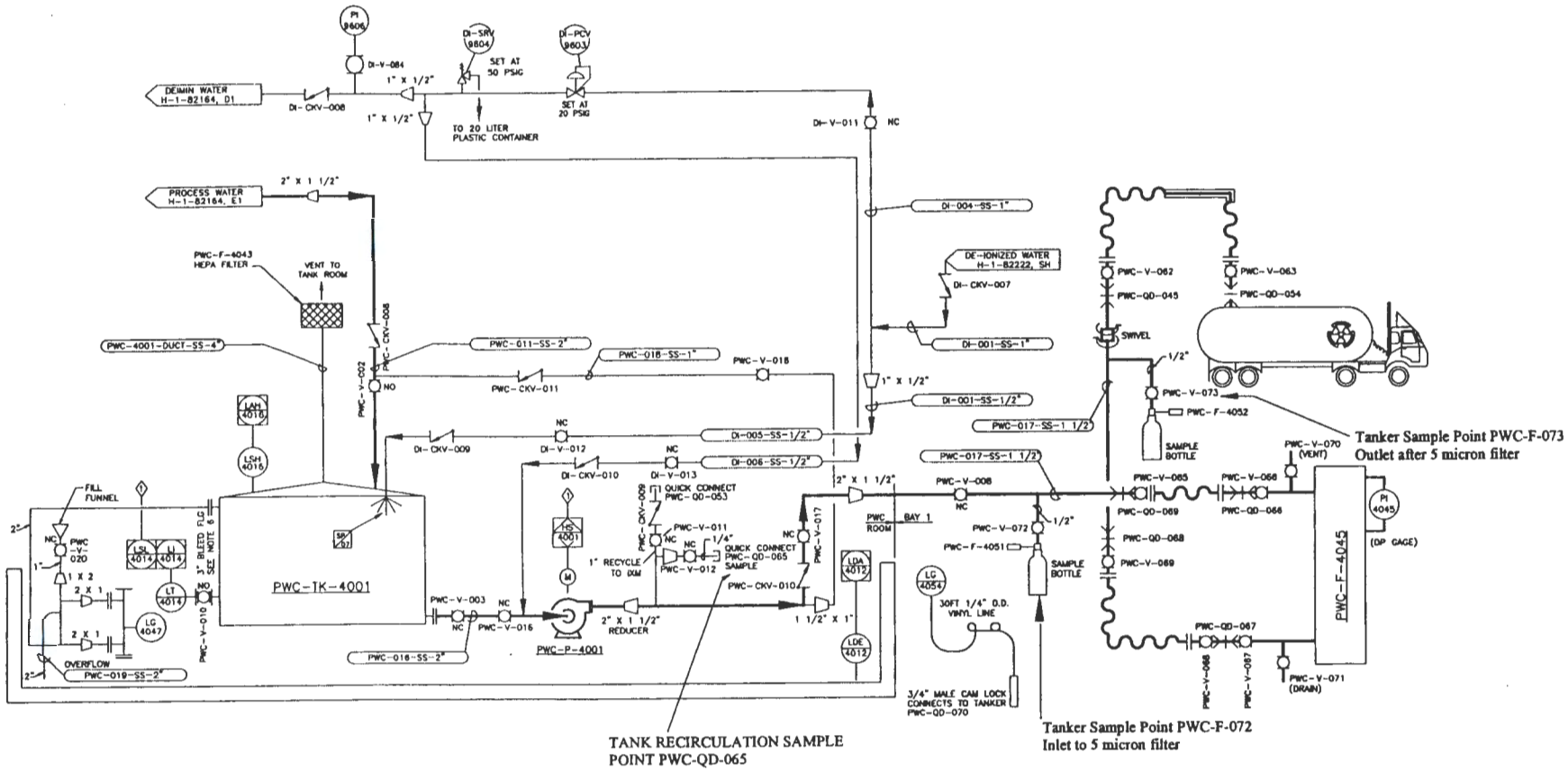

DISTRIBUTION SHEET

To	From	Page 1 of 1
Distribution	DFSNW	Date 6/13/01
Project Title/Work Order		EDT No.
Sampling and Analysis Plan for Characterization of Cold Vacuum Drying Facility Wastewater		ECN No. 660221

Name	MSIN	Text With All Attach.	Text Only	Attach./ Appendix Only	EDT/ECN Only
T.L. Blackford (H)	T3-04	x			
M.W. Bowman (H)	S6-72	x			
R.R. Connolly	T3-04	x			
P.T. Day	X3-80	x			
G.L. Eaton (H)	X3-78	x			
M.S. French (H)	HO-12	X			
L.E. Gadbois (H)	B5-01	X			
C. Girres (H)	H1-11	X			
M.A. Hahn (H)	T3-05	X			
R.M. Jochen (H)	X3-74	X			
K.J. Lueck (H)	S6-72	x			
C.A. Rodriquez (H)	B3-15	x			
K.M. Smith (H)	S8-09	x			
D.J. Watson (H)	X3-79	x			
J.H. Zimmerman (H)	X3-74	X			
D.A. Isom (H)	H6-08	X			
Central Files (H)	A3-95	x			
Shirley Myers (H)	H1-11	x			