0032667

Mr. John Grantham
State of Washington
Department of Ecology
Nuclear & Mixed Waste Program
P. O. Box 47600
Olympia, WA 98504-7600

FLUOR DANIEL, INC.

Date: June 4, 1993

Reference: Hanford Waste Vitrification Plant
DOE Contract DE-AC06-86RL10838
Fluor Contract 8457

Transmittal No.: WDOE-426
PLEASE NOTE CORRECTION ON WDOE-436 DATED JUNE 4, 1993
IT IS NOW WDOE-426. CORRECTION SENT JUNE 7, 1993.

Dear Mr. Grantham:

TRANSMITTAL

We enclose * copy of the items listed below. These are issued per US-DOE request.
* 2 FULLSIZE AND 1 REDUCED

Response due to Fluor: N/A
Responds to: A160 PACKAGE

NUMBER	REV	DATE	TITLE
SEE TRANSMITTAL ATTACHMENT	-----	-----	A160 PACKAGE MECHANICAL SITE UTILITIES REVISION 4 NOTE: A160 PACKAGE REVISION 5 WILL BE ISSUED ON WDOE-447. NOTE: PLEASE REPLACE WDOE-436 DATED JUNE 4, 1993 WITH WDOE 426. THE TRANSMITTAL NUMBER WAS INADVERTENTLY DUPLICATED.

Distribution:
Reference: FRP-934R1, FUP-461R1
R. L. Long, DOE-RL, w/0
TWP/AME Corresp Cntrl Cntr, MSIN A5-10 (A160 PACKAGE), w/0
P. Felise, WHC-RL (MSIN G6-06), w/1F
Environmental Data Management Center (MSIN H6-08), w/1F
D. Duncan, US EPA, Region X, w/0

Very truly yours,

Rosalie Cadenas for

R. S. Poulter
Project Director

RSP:MJY:lt

DEC 1993
RECEIVED
EDMC

Mr. John Grantham
State of Washington
Department of Ecology
Nuclear & Mixed Waste Program
P. O. Box 47600
Olympia, WA 98504-7600

FLUOR DANIEL, INC.

Date: June 4, 1993

Reference: Hanford Waste Vitrification Plant
DOE Contract DE-AC06-86RL10838
Fluor Contract 8457

Transmittal No.: WDOE-436

Dear Mr. Grantham:

TRANSMITTAL

We enclose * copy of the items listed below. These are issued per US-DOE request.
* 2 FULLSIZE AND 1 REDUCED

Response due to Fluor: N/A
Responds to: A160 PACKAGE

NUMBER	REV	DATE	TITLE
SEE TRANSMITTAL ATTACHMENT	-----	-----	A160 PACKAGE MECHANICAL SITE UTILITIES REVISION 4 **NOTE: A160 PACKAGE REVISION 5 WILL BE ISSUED ON WDOE-447.**

Distribution:
Reference: FRP-934, FUP-461
R. L. Long, DOE-RL, w/0
TWP/AME Corresp Cntrl Cntr, MSIN A5-10 (A160 PACKAGE), w/0
P. Felise, WHC-RL (MSIN G6-06), w/1F
Environmental Data Management Center (MSIN H6-08), w/1F
D. Duncan, US EPA, Region X, w/0

Very truly yours,

Rosalie Cadenas for

R. S. Poulter
Project Director

RSP:MJY:lt

TRANSMITTAL ATTACHMENT FOR PACKAGE DRAWINGS

PACKAGE NUMBER: A160

DRAWING NUMBER	SHT NO.	REV	DATE	DRAWING TITLE	SOFTWARE
H-2-117149	1	4	05/10/93	MECHANICAL SITE UTILITIES TITLE SHEET	A
H-2-117150	1	4	05/10/93	MECHANICAL SITE UTILITIES DRAWING INDEX	A
H-2-120003	1	2	05/10/93	TK-500-001 FIRE & PROCESS WATER STORAGE TANK	A

PROJECT TITLE:

B-595 HWVP-HANFORD WASTE VITRIFICATION PLANT

CWBS A160 MECHANICAL SITE UTILITIES

FOR:

U.S. DEPARTMENT OF ENERGY RICHLAND OPERATIONS OFFICE

BY:

FLUOR DANIEL, INC

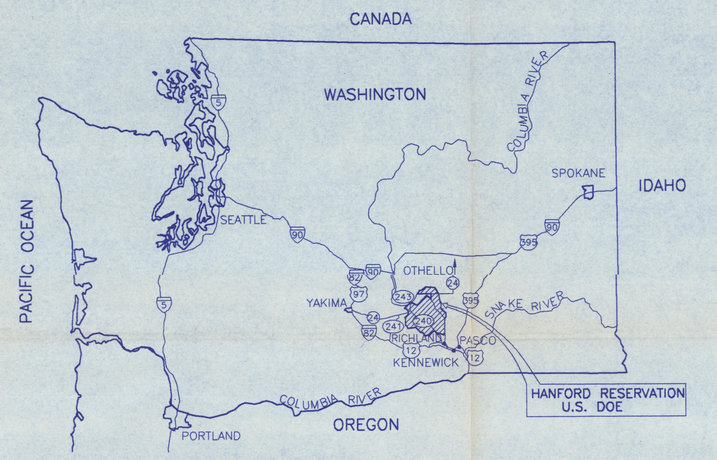

REGIONAL MAP

0 20 40 60 80 100
GRAPHIC SCALE
1" = 40 MILES

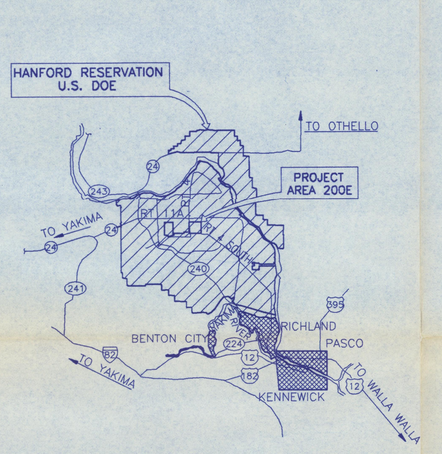

VICINITY MAP

0 5 10 15 20 25
GRAPHIC SCALE
1" = 10 MILES

LEGEND

DENOTES HANFORD RESERVATION U.S. DOE

DENOTES CITY LIMITS

MAY 19 1993

REV NO.	DATE	REVISION DESCRIPTION	APPROVAL INITIALS			
4	5/10/93	REVISIONS PER CR-HWVP-0760	JGO	SS	JLD	JGK
			EJ	MJH	BER	NHW
3	4/1/93	REVISIONS PER CR-HWVP-690, 760, 917 AND 960.	JLD	SS	JLD	PJS JLS
			EJ	MJH	JGK	RSP
2	3/12/93	REVISION PER CR-HWVP-0847 AND MINOR CHANGES	BRE	LMB	SAR	PJS
			MHF	MJH	JGK	NHW
1	8/21/92	REVISION PER CR-HWVP-656 AND OTHER MINOR CHANGES	JLD	PvK	JLD	GK
			EJ	AKY	BER	RSP
0	12/19/91	APPROVED FOR CONSTRUCTION	PvK	JLD	PvK JLD	GK
			EJ	MJH	JGK	RNG

CADFILE: B117149A
CADCODE: 2B:IBM:ACD2:12.C2:SS

ENGINEERING RELEASE
REV. _____ DATE _____
ERO. _____

SIGNATURE	DATE
PROJ. DIR. R N GIBBONS	12-19-91
Q.A. ENGR. J G KELLY	12-19-91
INDEPENDENT SAFETY M J HIGUERA	12-17-91
PROJECT PKG. ENGINEER E R JACOBS	12-17-91
ENGINEERING MGR. G N KIMURA	12-17-91
SUPERVISOR J L DATTE	12-16-91
DESIGN ENGINEER P v KRONBURG	12-16-91
CHECKED J L DATTE	12-16-91
DRAWN H MELGARES	7-5-91

U.S. DEPARTMENT OF ENERGY
Richland Operations Office
DE – AC06–86RL10838

FLUOR DANIEL, INC.
ADVANCED TECHNOLOGY DIVISION

MECHANICAL SITE UTILITIES
TITLE SHEET

PROJECT TITLE: HANFORD WASTE VITRIFICATION PLANT

PROJECT	FLUOR CONTRACT NO.	CWBS NO.
B-595	8457	A160

SCALE: NONE
BLDG. NO.
INDEX NO.

CLASSIFICATION	BY	DRAWING NUMBER	SHEET	OF	REV.
NONE	NOT REQ'D	H-2-117149	1	1	4

DWG. NO.	DRAWING TITLE
H-2-117150	MECH SITE UTILITIES DWG INDEX

REFERENCE DRAWINGS

NEXT USED ON

160 H-2-117149 1 R-4

DISTRIBUTION CODE: 301 T1 ACAD

INITIALS: SS
DATE: 05-4-93

TUE MAY 04 09:31:48 1993 P_CADD C:\PLOTS\PAA27SS1.PLT

DRAWING INDEX

DRAWING NO.	CODE NO.	TITLE	REV.
GENERAL			
H-2-117149	T1	MECHANICAL SITE UTILITIES TITLE SHEET	4
H-2-117150	T2	MECHANICAL SITE UTILITIES DRAWING INDEX	4
CIVIL			
H-2-117151	C1	CIVIL UNDERGROUND UTILITY INFORMATION SHEET	3
H-2-117152	C2	CIVIL UNDERGROUND UTILITY PLAN	3
H-2-117153	C3	CIVIL UNDERGROUND UTILITY PLAN	3
H-2-117154	C4	CIVIL UNDERGROUND UTILITY PLAN	3
H-2-117155	C5	CIVIL UNDERGROUND UTILITY PLAN	3
H-2-117156	C6	CIVIL UNDERGROUND UTILITY PLAN	3
H-2-117157	C7	CIVIL UNDERGROUND UTILITY PLAN	2
H-2-117158	C8	CIVIL UNDERGROUND UTILITY PLAN	3
H-2-117159	C9	CIVIL UNDERGROUND UTILITY PLAN	3
H-2-117160	C10	CIVIL UNDERGROUND UTILITY PLAN	3
H-2-117161	C11	CIVIL UNDERGROUND UTILITIES SECTIONS & DETAILS	1
H-2-117162	C12	CIVIL UNDERGROUND UTILITIES SECTIONS & DETAILS	1
H-2-117163	C13	CIVIL UNDERGROUND UTILITIES SECTIONS & DETAILS	0
H-2-117164	C14	CIVIL UNDERGROUND UTILITIES SECTIONS & DETAILS	2
H-2-117165	C15	CIVIL DRX LINES PROFILES	3
H-2-117166	C16	CIVIL SANITARY SEWER PROFILES	2
H-2-117167	C17	CIVIL SANITARY SEWER PROFILES	2
H-2-117168	C18	CIVIL SANITARY SEWER PLAN & PROFILE	2
H-2-117169	C19	CIVIL SANITARY SEWER SECTIONS & DETAILS	1
H-2-117170	C20	CIVIL SANITARY SEWER SECTIONS & DETAILS	1
H-2-117171	C21	CIVIL SANITARY SEWER SECTIONS & DETAILS	1
H-2-117172	C22	CIVIL SANITARY SEWER SECTIONS & DETAILS	2
H-2-117173	C23	CIVIL SANITARY SEWER LIFT STATION & DETAILS	0
H-2-117174	C24	CIVIL SWX AND FWX PIPE PROFILES	1
H-2-117175	C25	CIVIL SWX AND FWX PIPE PROFILES	1
H-2-117176	C26	CIVIL SWX AND FWX PIPE PROFILES	1
H-2-117177	C27	CIVIL SWX, FWX AND DRX PIPE PROFILES	2
H-2-117178	C28	CIVIL SWX AND FWX PIPE PROFILES	1
H-2-117179	C29	CIVIL SWX AND FWX PIPE PROFILES	1
ARCHITECTURAL/ HVAC			
H-2-117897	A1	ARCHITECTURAL/HVAC GEN NOTES & SCHEDULES	1
H-2-117898	A2	ARCHITECTURAL/HVAC RWX PUMP HOUSE PLANS, ELEV'S, SECTIONS	1
H-2-117899	A3	ARCHITECTURAL/HVAC FW PUMP HOUSE PLANS, ELEV'S, SECTIONS	1
H-2-117900	A4	ARCHITECTURAL/HVAC RWX/SWX MANIF SHLTR PLANS, ELEV'S, SECT'S	1
H-2-117901	A5	ARCHITECTURAL/HVAC DETAILS	1
STRUCTURAL			
H-2-118006	S1	STRUCTURAL NOTES AND TYPICAL DETAILS	1
H-2-118007	S2	STRUCTURAL FW, RWX & RWX/SWX BLDGS FOUNDATION PLANS	1
H-2-118008	S3	STRUCTURAL FW, RWX & RWX/SWX BLDGS FOUNDATION DETAILS	1
H-2-118009	S4	STRUCTURAL FW PUMP HOUSE STEEL PLAN & ELEVATION	1
H-2-118010	S5	STRUCTURAL RWX PUMP HOUSE STEEL PLAN & ELEVATION	1
H-2-118011	S6	STRUCTURAL RWX/SWX MANIF SHLTR DETS & STANDARD STEEL DETAILS	1
H-2-118012	S7	STRUCTURAL STANDARD STEEL DETAILS	1
H-2-118013	S8	STRUCTURAL TK-500-001 FDN DETAILS & BLDG FLANGE BOX DETAILS	1
H-2-118014 SH 1	S9	STRUCTURAL FW, RWX, RWX/SWX BLDGS EQUIPMENT ANCHOR DETAILS	1
H-2-118014 SH 2	S10	STRUCTURAL FW, RWX, RWX/SWX BLDGS EQUIPMENT ANCHOR DETAILS	0
H-2-118015	S11	STRUCTURAL WALKWAY & PS-YP-74 CONCRETE & STEEL DETAILS	1
H-2-118016	S12	STRUCTURAL YARD PIPE SUPPORTS CONCRETE & STEEL DETAILS	1
H-2-118017	S13	STRUCTURAL PS-YP-66 THRU PS-YP-73 AND PS-YP-75 FDN DETS	1
H-2-118018	S14	STRUCTURAL YARD PIPE SUPPORTS DETAILS	1
H-2-118019	S15	STRUCTURAL RWX PUMP HOUSE DETAILS	1
H-2-118020	S16	STRUCTURAL CATH PROT RECT PAD & SU-530-004 & 005 DETAILS	0
MECHANICAL			
H-2-124020	M1	GENERAL NOTES, KEY PLAN, LEGEND AND SYMBOLOGY	1
H-2-124022 SH 1	M2	PIPING STANDARD DETAILS	1
H-2-124022 SH 2	M3	PIPING STANDARD DETAILS	1
H-2-124026	M4	PIPING HIGH PRESSURE STEAM LINE ABOVEGROUND PLAN	1
H-2-124030	M5	PIPING RWX PUMP HOUSE/SHELTER PLAN	1
H-2-124033	M6	PIPING FW PUMP HOUSE & STOR TK PLAN	1
H-2-124035	M7	PIPING RAW WATER PUMP HOUSE & SHELTER SECTIONS	0
H-2-124036	M8	PIPING FW PUMP HOUSE & STOR TK SECTIONS	0
H-2-124037	M9	PIPING FW PUMP HOUSE & STOR TK SECTIONS	0
H-2-124038	M10	CATHODIC PROTECTION FW STORAGE TANK PLAN & DETAILS	0
H-2-120003	M11	TK-500-001 FIRE AND PROCESS WATER STORAGE TANK	2
H-2-121380	M12	INSTRUMENT INSTALLATION SUPPORT DETAILS	1
H-2-121422	M13	INSTRUMENT INSTALLATION DETAILS	1
H-2-121423	M14	INSTRUMENT INSTALLATION DETAILS	1
H-2-121424	M15	INSTRUMENT INSTALLATION DETAILS	0
H-2-121203	M16	INSTRUMENT LOCATION PLAN BUILDINGS 20	0
H-2-121204	M17	INSTRUMENT LOCATION PLAN BUILDINGS 21 & 23	0
H-2-124034	VOID	PIPING FW PUMP HOUSE & STOR TK DETAILS	1

DRAWING INDEX

DRAWING NO.	CODE NO.	TITLE	REV.
MECHANICAL cont			
H-2-126144		PIPING ISOMETRIC INDEX	0
H-2-126145 SH 1		PIPING ISOMETRIC	0
H-2-126145 SH 2		PIPING ISOMETRIC	0
H-2-126145 SH 3		PIPING ISOMETRIC	0
H-2-126145 SH 4		PIPING ISOMETRIC	0
H-2-126145 SH 5		PIPING ISOMETRIC	0
H-2-126145 SH 6		PIPING ISOMETRIC	0
H-2-126146 SH 1		PIPING ISOMETRIC	0
H-2-126146 SH 2		PIPING ISOMETRIC	0
H-2-126146 SH 3		PIPING ISOMETRIC	0
H-2-126146 SH 4		PIPING ISOMETRIC	0
H-2-126146 SH 5		PIPING ISOMETRIC	0
H-2-126146 SH 6		PIPING ISOMETRIC	0
H-2-126146 SH 7		PIPING ISOMETRIC	0
H-2-126146 SH 8		PIPING ISOMETRIC	0
H-2-126146 SH 9		PIPING ISOMETRIC	0
H-2-126146 SH 10		PIPING ISOMETRIC	0
H-2-126146 SH 11		PIPING ISOMETRIC	0
H-2-126146 SH 12		PIPING ISOMETRIC	0
H-2-126146 SH 13		PIPING ISOMETRIC	0
H-2-126147 SH 1		PIPING ISOMETRIC	0
H-2-126147 SH 2		PIPING ISOMETRIC	0
H-2-126147 SH 3		PIPING ISOMETRIC	0
H-2-126147 SH 4		PIPING ISOMETRIC	0
H-2-126147 SH 5		PIPING ISOMETRIC	0
H-2-126147 SH 6		PIPING ISOMETRIC	0
H-2-126147 SH 7		PIPING ISOMETRIC	0
H-2-126147 SH 8		PIPING ISOMETRIC	0
H-2-126147 SH 9		PIPING ISOMETRIC	0
H-2-126147 SH 10		PIPING ISOMETRIC	0
H-2-126147 SH 11		PIPING ISOMETRIC	0
H-2-126147 SH 12		PIPING ISOMETRIC	0
H-2-126147 SH 13		PIPING ISOMETRIC	0
H-2-126147 SH 14		PIPING ISOMETRIC	0
H-2-126147 SH 15		PIPING ISOMETRIC	0
H-2-126147 SH 16		PIPING ISOMETRIC	0
H-2-126147 SH 17		PIPING ISOMETRIC	0
H-2-126147 SH 18		PIPING ISOMETRIC	0
H-2-126147 SH 19		PIPING ISOMETRIC	0
H-2-126147 SH 20		PIPING ISOMETRIC	0
H-2-126148 SH 1		PIPING ISOMETRIC	0
H-2-126148 SH 2		PIPING ISOMETRIC	0
H-2-126148 SH 3		PIPING ISOMETRIC	0
H-2-126148 SH 4		PIPING ISOMETRIC	0
H-2-126148 SH 5		PIPING ISOMETRIC	0
H-2-126148 SH 6		PIPING ISOMETRIC	0
ELECTRICAL			
H-2-122081 SH 1	E1	ELECTRICAL STANDARD DRAFTING SYMBOLS	1
H-2-122081 SH 2	E2	ELECTRICAL STANDARD ABBREVIATIONS AND GENERAL NOTES	0
H-2-122083 SH 1	E3	ELECTRICAL ONE LINE DIAGRAM	1
H-2-122083 SH 2	E4	ELECTRICAL ONE LINE DIAGRAM	0
H-2-122082 SH 1	E5	ELECTRICAL STANDARD ASSEMBLIES	2
H-2-122082 SH 2	E6	ELECTRICAL STANDARD ASSEMBLIES	1
H-2-122082 SH 3	E7	ELECTRICAL STANDARD ASSEMBLIES	1
H-2-122082 SH 4	E8	ELECTRICAL STANDARD ASSEMBLIES & DETAILS	2
H-2-122082 SH 5	E9	ELECTRICAL STANDARD ASSEMBLIES	0
H-2-122093	E10	ELECTRICAL UNDERGROUND CABLE PLAN CONSTRUCTION UTILITIES	2
H-2-122084	E11	ELECTRICAL UNDERGROUND CONDUIT AND GROUNDING PLAN	2
H-2-122085	E12	ELECTRICAL UNDERGROUND CONDUIT AND GROUNDING PLAN	2
H-2-122086	E13	ELECTRICAL UNDERGROUND SECTIONS	2
H-2-122088	E14	ELECTRICAL PWR, GNDG, HT TR & LTNG PROT PLAN, BLDG 20	2
H-2-122089	E15	ELECTRICAL PWR, GNDG, HT TR & LTNG PROT PLAN, BLDG 21 & 23	2
H-2-122091	E16	ELECTRICAL LIGHTING & COMMUNICATION PLANS BLDGS 20, 21, & 23	1
H-2-122094	E17	ELECTRICAL POWER, LTG AND HEAT TRACING SECTIONS AND DETAILS	0
H-2-122098	E18	ELECTRICAL PANEL SCHEDULES BLDG 20, 21 & 23	1
H-2-122099 SH 1	E19	ELECTRICAL ELEMENTARY DIAGRAMS	1
H-2-122099 SH 2	E20	ELECTRICAL ELEMENTARY DIAGRAMS	0
H-2-122087 SH 1	E21	INSTRUMENT CONDUIT ROUTING PLAN BLDG 20	0
H-2-122087 SH 2	E22	INSTRUMENT CONDUIT ROUTING PLAN BLDG 21 & 23	0
H-2-121660	E23	LP-500-700 INSTRUMENT PANEL LAYOUT	1
H-2-121655	E24	LP-500-001A & 001B INSTRUMENT PANEL LAYOUT	0
H-2-121656	E25	LP-500-002A & 002B INSTRUMENT PANEL LAYOUT	0
H-2-121657	E26	LP-500-004 INSTRUMENT PANEL LAYOUT	0
H-2-121658	E27	LP-500-005A & 005B INSTRUMENT PANEL LAYOUT	0
H-2-121659	E28	LP-500-006 INSTRUMENT PANEL LAYOUT	0
H-2-122100 SH 1	E29	ELECTRICAL CONNECTION DIAGRAMS TB-20-X1 & TB-20-A/B1	0
H-2-122100 SH 2	E30	ELECTRICAL CONN DIAGRAMS TB-21-X1, TB-21-A/B1 & TB-23-A/B1	0
H-2-122100 SH 3	E31	ELECTRICAL CONNECTION DIAGRAM LP-500-007	0
H-2-122100 SH 4	E32	ELECTRICAL CONNECTION DIAGRAMS LP-500-002A/002B	0
H-2-122100 SH 5	E33	ELECTRICAL CONNECTION DIAGRAMS LP-500-005A/005B	0
H-2-122100 SH 6	E34	ELECTRICAL CONNECTION DIAGRAMS LP-500-004/006	0
H-2-122100 SH 7	E35	ELECTRICAL CONNECTION DIAGRAMS LP-500-001A/001B	0
H-2-121661	E36	LP-510-001 INSTRUMENT PANEL LAYOUT	0
H-2-121662	E37	LP-500-008A AND 008B INSTRUMENT PANEL LAYOUT	0
H-2-122100 SH 8	E38	ELECTRICAL CONNECTION DIAGRAMS LP-500-008A/008B & TB-23-P1	0
H-2-121200	VOID	INSTRUMENT LOCATION/CONDUIT ROUTING PLAN BLDG 20	1
H-2-121201	VOID	INSTRUMENT LOCATION/CONDUIT ROUTING PLAN BLDG 21 & 23	1

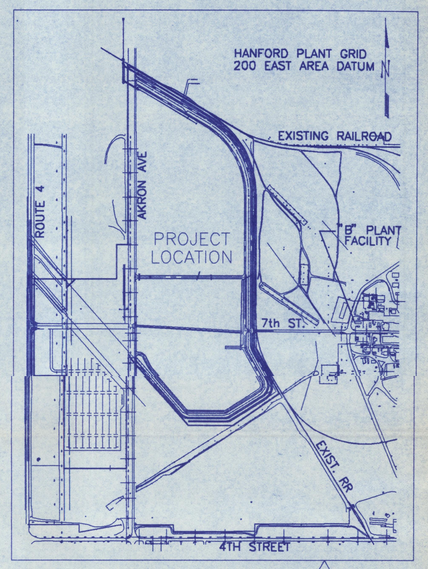

PROJECT AREA MAP

MAY 1 9 1993

REV NO.	DATE	REVISION DESCRIPTION	APPROVAL INITIALS			
4	5-6-93	REVISIONS PER CR-HWVP-0760	JLD	SS	JLD	PJS
			EJ	MJH	BER	NHW
3	4/1/93	REVISIONS PER CR-HWVP-690, 760,	JLD	SS	JLD	PJS
		917 AND 960	EJ	MJH	JGK	RSP
2	3/12/93	REVISIONS PER CR-HWVP-847	BRE	LMB	SAR	PJS
			MHF	MJH	JGK	NHW
1	8/21/92	REVISION PER CR-HWVP-656 AND	JLD	PvK	JLD	GK
		OTHER MINOR CHANGES	EJ	AKY	BER	RSP
0	12/19/91	APPROVED FOR CONSTRUCTION	PvK	JLD	PvK JLD	GK
			EJ	MJH	JGK	RNG

CADFILE B117150A CADCODE 2B:IBM:ACD2:12.C2:SS

ENGINEERING RELEASE
REV. _____ DATE _____
ERO. _____

SIGNATURE		DATE
PROJ. DR.	R N GIBBONS	12/19/91
G.A. ENGR.	J G KELLY	12/19/91
INDEPENDENT SAFETY	M J HIGUERA	12/19/91
PROJECT PKG ENGINEER	E R JACOBS	12/17/91
ENGINEERING MGR.	G N KIMURA	12/17/91
SUPERVISOR	J L DATTE	12/16/91
DESIGN ENGINEER	P v KRONBURG	12/16/91
CHECKED	J L DATTE	12/16/91
DRAWN	H. MELGARES	7/5/91

U.S. DEPARTMENT OF ENERGY
Richland Operations Office
DE - AC06-86RL10838

FLUOR DANIEL, INC.
ADVANCED TECHNOLOGY DIVISION

MECHANICAL SITE UTILITIES
DRAWING INDEX

PROJECT TITLE: HANFORD WASTE VITRIFICATION PLANT

PROJECT	FLUOR CONTRACT NO.	CWBS NO.
B-595	8457	A160

SCALE	BLDG. NO.	INDEX NO.
NONE		

CLASSIFICATION	BY	DRAWING NUMBER	SHEET	OF	REV.
NONE	NOT REQ'D	H-2-117150	1	1	4

DWG. NO.	DRAWING TITLE
REFERENCE DRAWINGS	
NEXT USED ON	

160 H-2-117150 4 1 1 R-4

DISTRIBUTION CODE : 301 T2 ACAD 05/04/93 SS

Tue May 04 10:12:15 1993 P:CAD2 Q:\PLOTS\PAA27552.PLT

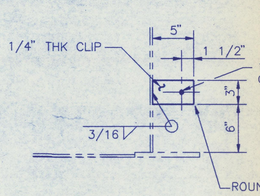

DETAIL 4
(4) GROUNDING CLIPS
(3) CATHODIC GROUNDING CLIPS

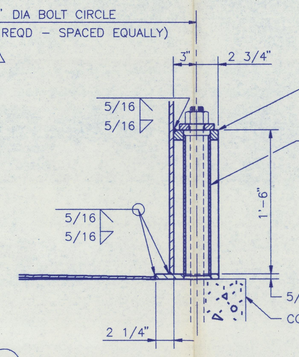

ESTIMATED TOTAL SHEAR @ BASE= 886,000 LB
ESTIMATED TOTAL MOMENT @ BASE= 12,470,000 FT-LB

DETAIL 1
ANCHOR BOLT CHAIR
(52 REQD)

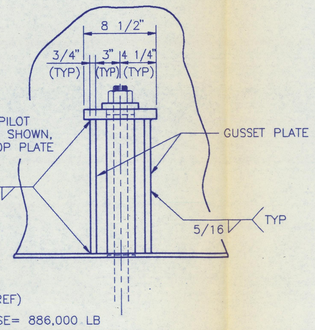

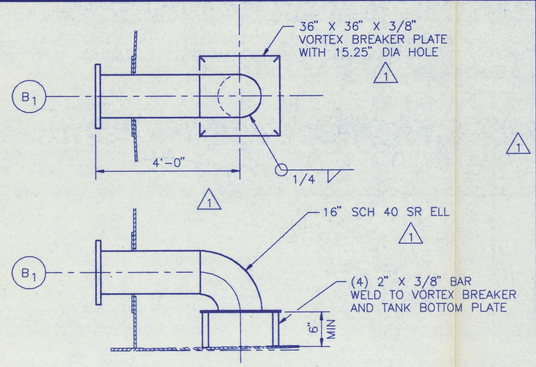

DETAIL 2

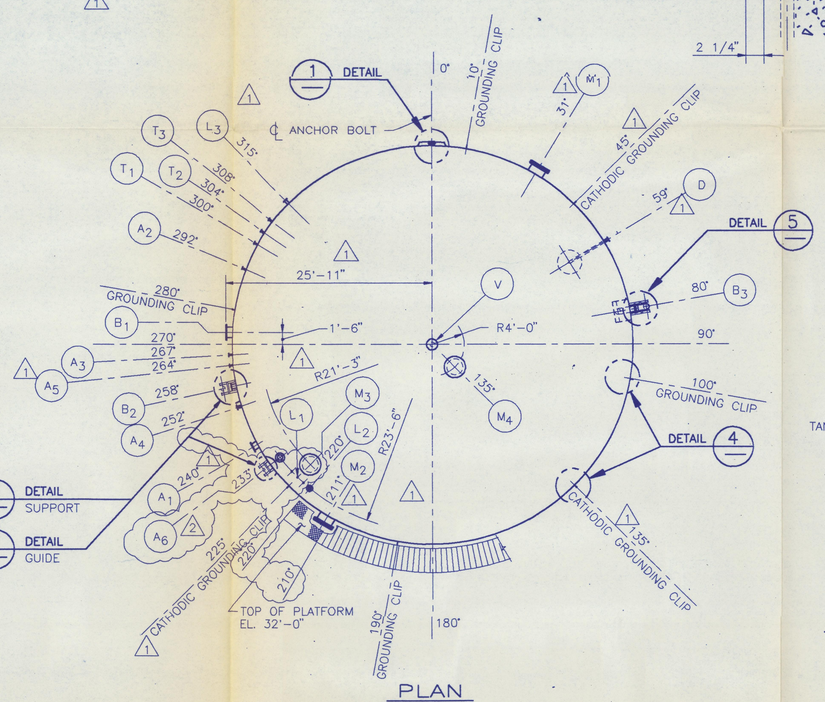

PLAN
PLANT GRID DATUM – NORTH @ 0°

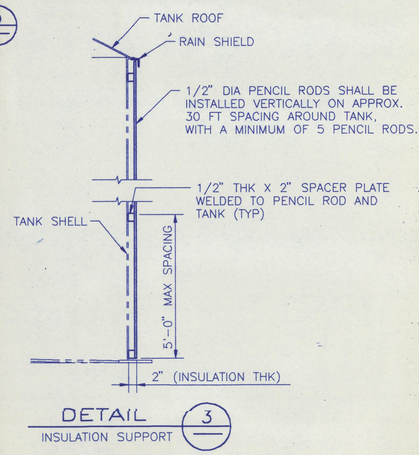

DETAIL 3
INSULATION SUPPORT

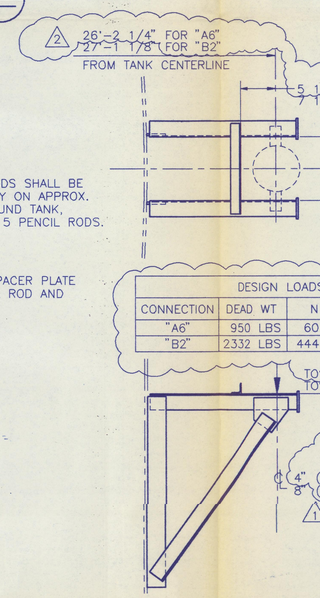

DESIGN LOADS			
CONNECTION	DEAD WT	N-S	E-W
"A6"	950 LBS	60 LBS	70 LBS
"B2"	2332 LBS	444 LBS	444 LBS

DETAIL 6
PIPE SUPPORT FOR "A6" & "B2" (BY SELLER)

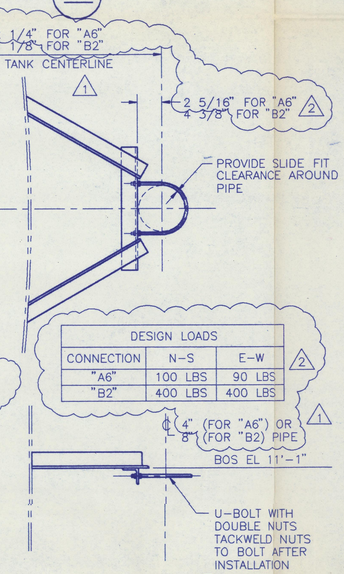

DESIGN LOADS		
CONNECTION	N-S	E-W
"A6"	100 LBS	90 LBS
"B2"	400 LBS	400 LBS

DETAIL 7
PIPE GUIDE FOR "A6" & "B2" (BY SELLER)

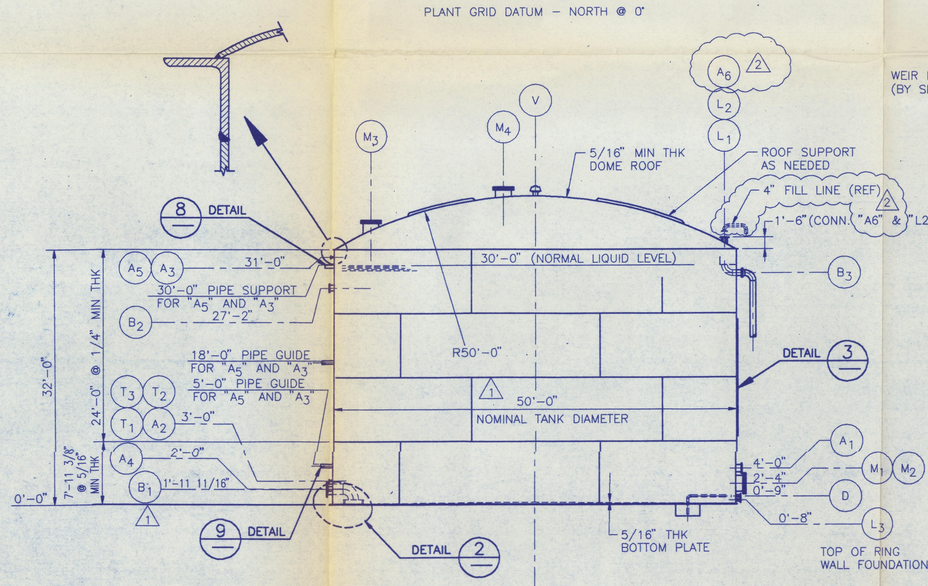

ELEVATION
ONE TANK REQUIRED
SEE PLAN FOR TRUE ORIENTATION

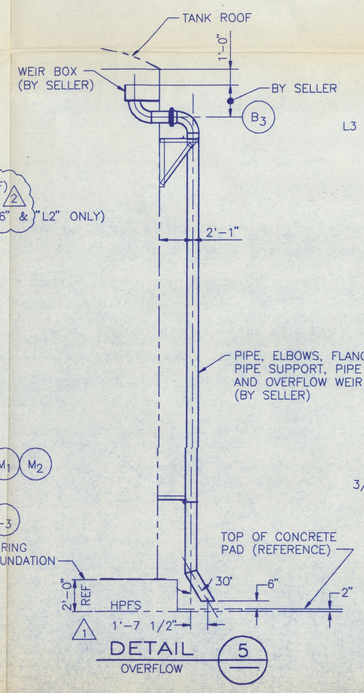

DETAIL 5
OVERFLOW

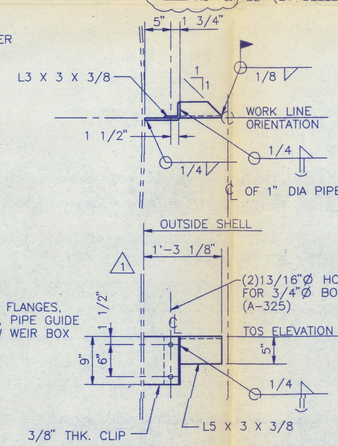

DETAIL 8
PIPE SUPPORT FOR "A3" AND "A5"

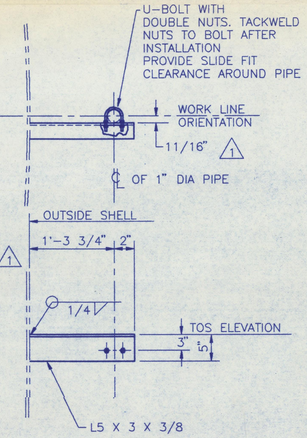

DETAIL 9
PIPE GUIDE FOR "A3" AND "A5"

H-2-124020	GENERAL NOTES, KEY PLAN, LEGEND, SYMBOLOGY AND ABBREVIATIONS
H-2-118013	STRUCTURAL TK-500-001 FOUNDATION DETAILS & BUILDING FLANGE BOX DETAILS
H-2-117150	MECH SITE UTILITIES DRAWING INDEX
DWG. NO.	DRAWING TITLE

REFERENCE DRAWINGS
NEXT USED ON

DESIGN DATA

1. DESIGN & CONSTRUCTION: NFPA 22/AWWA D100 APPENDIX C
2. SPECIFICATION SECTION: B-595-C-A160-13411
3. DESIGN PRESSURE: 1" W.G./ – 1" W.G. TEMP: 150° F
4. OPERATING PRESSURE: ATMOSPHERIC TEMP: AMBIENT
5. SPECIFIC GRAVITY OF CONTENTS: 1.0 @ 60° F
6. WELD INSPECTION: SPOT RADIOGRAPHY PER AWWA D100
7. NOMINAL CORROSION ALLOWANCE:
   SHELL 1/16" BOTTOM 1/16" ROOF 1/16" NOZZLE 1/16"
8. CAPACITY: 440,640 GALLONS (NOMINAL)
9. RATES: FILLING 200 GPM EMPTYING 3000 GPM
10. COIL: NONE
11. HEATER: NONE
12. AGITATOR: NONE
13. MATERIAL SPECIFICATIONS:
   (a) SHELL A-516-70 (PER AWWA D100 APPENDIX C)
   (b) BOTTOM A-516-70 (PER AWWA D100)
   (c) ROOF A-516-70 (PER AWWA D100)
   (d) NOZZLE NECKS & PIPE PER AWWA D100 APPENDIX C
   (e) FLANGES (EXTERNAL) PER AWWA D100 APPENDIX C
   (f) COUPLINGS (SCREWED) SA-105
   (g) GASKETS 1/16" THK. JM-960 OR EQUAL
   (h) BOLTING (EXTERNAL) A-307B W/ A-563A NUTS(EXCEPT AS NOTED)
   (j) BOLTING (INTERNAL) NONE
   (k) INTERNALS PER AWWA D100
   (l) LINING EPOXY (SEE NOTE# 7)
   (m) EXTERNAL APPURTENANCES CARBON STEEL
14. PAINT(EXTERNAL): ONE COAT OF AMERON DIMETCOTE 9 (OR EQUAL) TO A DRY FILM THK. OF 2.5 MILS PER MANUFACTURER'S STANDARD. BLAST CLEAN SURFACES PER SSPC-SP-6.
15. INSULATION- HOT(ROOF & SHELL) PER SPEC. SECTION 15250 MECHANICAL INSULATION — NO. OF LAYERS: ONE; TOTAL THK.: 2"
16. N/A
17. DELETED
18. ESTIMATED WEIGHT (LBS.) OPERATING – 3,958,600 TESTING – 4,079,800

PURCHASE ORDER NO.
SELLER

NOTES:

1. ELEVATIONS ARE GIVEN FROM UNDERSIDE OF BOTTOM PLATE (EL 0'-0") TO: (a) ℄ OF CONNECTION (b) TOP OF PIPE SUPPORT (c) TOP OF STEEL PLATFORM
2. NOZZLE PROJECTIONS ARE MEASURED FROM ℄ OF TANK TO EXTREME FACE OF FLANGE UNLESS OTHERWISE NOTED.
3. TANK ROOF: SELF SUPPORTING DOME ROOF
4. TANK BOTTOM PLATE TO BE SLOPED OUTWARD: 1" IN 10'-0"
5. SELLER SHALL SUPPLY AND INSTALL ITEMS INDICATED " X ".
   a. ☐ STRAIGHT LADDER WITH CAGE/WITHOUT CAGE.
   b. ☒ SPIRAL STAIRWAY WITH PLATFORM.
   c. ☒ HANDRAIL AT TOP OF TANK
   d. ☐ (SIZE) GAUGE HATCH IN ____ TO ____ OR EQUAL
   e. ☒ TYPE OF INSULATION SUPPORTS SEE DETAIL "3"
   f. ☒ BOTTOM SUMP WITH DRAIN. SEE DETAIL 3-15 API-650
   g. ☐ (LENGTH) INTERNAL COIL OF (SIZE-SCHEDULE) PIPE. SEE DETAIL
   h. ☐ FOAM CHAMBER
   j. ☒ TANK GAUGE PER SPEC. SECTION 17801 MECHANICAL SITE UTILITIES INSTRUMENTATION
   k. ☒ VENT VAREC FIG. 7000 OR EQUAL (SIZE BY SELLER)
6. NOZZLE CONN. SIZE 2" AND SMALLER SHALL BE STAINLESS STEEL. PIPE= SA-312 GR TP304L AND FLANGE= SA-182 GR F304L.
7. EPOXY LINING- APPLY (4) COATS OF AMERON'S AMERCOAT 33 (OR EQUAL) WITH 1.5 MILS DRY FILM THICKNESS PER COAT FOR A TOTAL DRY FILM THICKNESS OF 6.0 MILS PER MANUFACTURER'S STANDARD. WHITE METAL BLAST CLEAN SURFACES PER SSPC-SP-5.
8. PAINT ON TWO SIDES OF TANK, "DO NOT WELD OR BURN – EPOXY LINED".
9. MINIMUM METAL DESIGN TEMPERATURE = + 5 °F

MARK	NO. REQ'D	SIZE	RATING	FACING	PROJECTION	API 650 FIG.NO.	DESCRIPTION
V	1	---	150#	RF	SEE ELEV.	3-13	VENT (SEE NOTE 5k)
T_3	1	1 1/2"	300#	RF	25'-7"	3-5	TEMPERATURE SWITCH
T_2	1	1 1/2"	300#	RF	25'-7"	3-5	TEMPERATURE INDICATOR
T_1	1	1 1/2"	300#	RF	25'-7"	3-5	TEMPERATURE ALARM
M_{3-4}	2	24"	PER API-650			3-12	ROOF MANHOLE
M_{1-2}	2	24"	PER API-650			3-4A	SHELL MANHOLE
L_3	1	3"	150#	RF	25'-7"	3-5	LEVEL TRANSMITTER
L_2	1	4"	150#	RF	SEE ELEV.	3-13	LEVEL SWITCH
L_1	1	1 1/2"	---	CPLG	---	3-14	LEVEL INDICATOR (SEE NOTE 5j)
D	1	3"	150#	RF	25'-8"	3-15	DRAIN (SEE NOTE 5f)
B_3	1	8"	150#	RF	DET. "5"	3-5	OVERFLOW
B_2	1	8"	150#	RF	25'-9"	3-5	OUTLET TO PROCESS WATER PUMPS
B_1	1	16"	150#	RF	SEE PLAN	3-5	OUTLET TO FW PUMPS W/VORTEX BREAKER
A_6	1	8"	150#	RF	SEE ELEV.	3-13	FILL CONNECTION
A_4	1	3"	150#	RF	25'-9"	3-5	SPARE W/BLIND FLANGE
A_3, A_5	2	2"	150#	RF	25'-8"	3-5	FIREWATER PUMP PSV DISCHARGE
A_2	1	2"	150#	RF	25'-8"	3-5	JOCKEY PUMP RECIRC & FW HTR PUMP DISCH
A_1	1	10"	150#	RF	25'-10"	3-5	INLET (FW PUMP RECIRC)

CONNECTION SCHEDULE

SAFETY CLASS 3 QUALITY LEVEL II

REV NO.	DATE	REVISION DESCRIPTION	CST EJ	DLH AKY	RBE BER	JLS GNK RSP
1	8/21/92	REVISION PER CR-HWVP-656				
2	5/10/93	REVISION PER CR-HWVP-760. REMOVED DBE DESIGNATION TO INCORPORATE DCN 12. REMOVED HOLD NO. 274 AND INCORPORATED DCN 19. OTHER MINOR CHANGES.	EJ	AKY	BER	RSP

CADFILE B120003A CADCODE 2B:IBM:ACD2:10.C2:S S

ENGINEERING RELEASE
REV. ____ DATE ____
ERO. ____

SIGNATURE		DATE
PROJ. DIR.	R.N.GIBBONS	12-19-91
Q.A. ENGR.	J.G.KELLY	12-19-91
INDEPENDENT SAFETY	M.J.HIGUERA	12-19-91
PROJECT PKG ENGINEER	E.R.JACOBS	12-17-91
ENGINEERING MGR.	G.N.KIMURA	12-19-91
SUPERVISOR	C.J.DIVONA	12-16-91
DESIGN ENGINEER	M.C.SANVICTORES	12-16-91
CHECKED	D.L.HSU	12-16-91
DRAWN	C.S.TALLUD	08-28-90

U.S. DEPARTMENT OF ENERGY
Richland Operations Office
DE – AC06-88RL10838
MAY 19 1993

FLUOR DANIEL, INC.
ADVANCED TECHNOLOGY DIVISION

TK-500-001
FIRE AND PROCESS WATER STORAGE TANK

PROJECT TITLE: HANFORD WASTE VITRIFICATION PLANT
PROJECT: B-595 FLUOR CONTRACT NO.: B457 CWBS NO.: A160
SCALE: NONE BLDG. NO.: 20 INDEX NO.:
CLASSIFICATION: NONE BY: NOT REQ'D
DRAWING NUMBER: H-2-120003 SHEET 1 OF 1 REV. 2

DISTRIBUTION CODE : 402 M11 ACAD 05/05/93 CST