0038543

START

166

DOE/RL-94-42
Draft A

100-BC-2 Limited Field Investigation Report

9413293.2987

United States
Department of Energy
Richland, Washington

Approved for Public Release

TRADEMARK DISCLAIMER

Reference herein to any specific commercial product, process, or service by trade name, trademark, manufacturer, or otherwise, does not necessarily constitute or imply its endorsement, recommendation, or favoring by the United States Government or any agency thereof or its contractors or subcontractors.

This report has been reproduced from the best available copy.

Printed in the United States of America

DISCLM-4.CHP (1-91)

9W13253.2988

0038543

EXECUTIVE SUMMARY

This report summarizes the data collection and analysis activities conducted during the 100-BC-2 Operable Unit limited field investigation (LFI) and presents the associated qualitative risk assessment (QRA). This report also provides recommendations on the continued candidacy for interim remedial measures (IRM) for the three high-priority waste sites and the 11 solid waste burial grounds in this operable unit. An IRM is intended to achieve remedies that are likely to lead to a final Record of Decision, and is not restricted to limited or short-term actions.

The data collection and analysis activities were conducted in accordance with the *Remedial Investigation/Feasibility Study Work Plan for the 100-BC-2 Operable Unit* (DOE-RL 1993a). The QRA was performed in accordance with the *Hanford Site Risk Assessment Methodology* (DOE-RL 1994a) and the recommendations incorporate the strategies of the *Hanford Past-Practice Strategy* (DOE-RL 1991a). The purpose of this report is to:

- provide a summary of site characterization activities
- refine the conceptual exposure model (as needed)
- identify chemical- and location-specific applicable or relevant and appropriate requirements
- provide a QRA of risks associated with high-priority sites and a solid waste burial ground
- identify those sites that are candidates to remain on the IRM path.

The 100-BC-2 Source Operable Unit consists of an area of approximately 1.7 km^2 (0.6 mi^2) within the 100 B/C Area. The operable unit contains waste sites associated with the original plant facilities constructed to support the operation of the C Reactor and liquid, sludge, and solid waste units. All known and suspected areas of contamination were classified either as high- or low-priority, or as a solid waste burial ground based on the collective knowledge of the operable unit managers (representatives from the U.S. Department of Energy, the U.S. Environmental Protection Agency, and the Washington State Department of Ecology) during the preparation of the 100-BC-2 work plan (DOE-RL 1993a) (Table ES-1). High-priority sites were judged to pose sufficient risk(s), through one or more pathways, to require evaluation for an IRM. Low-priority sites are those sites judged not to pose significant risk to require a streamlined evaluation. In addition, solid waste burial grounds were identified; they were not assigned a priority, but have been assigned to the IRM path. In the 100-BC-2 Operable Unit three waste sites were identified as high-priority: the 116-C-2A pluto crib; the 116-C-2B pluto crib pump station; and the 116-C-2C pluto crib sand filter. There were five low-priority waste sites and eleven solid waste burial grounds identified.

OCT 1994 RECEIVED EDMC

The 116-C-2C pluto crib was the only high-priority site investigated using intrusive methods. This site was investigated by drilling a borehole through the crib to collect samples from the vadose zone. The samples were analyzed for metals, certain anions, and radionuclides. All analytical data were validated. In addition, the 118-B-1 and 118-C-1 burial grounds were investigated using the surface based geophysical methods of ground-penetrating radar and electro-magnetic induction.

Analytical results, from both LFI and historical data, show that radionuclide contamination is of primary concern in the 100-BC-2 Operable Unit. Radionuclide concentrations are highest in the 116-C-2C pluto crib sand filter. Qualitative risk assessment results show that the 116-C-2C pluto crib sand filter has a high human-health risk and an environmental hazard quotient (EHQ) rating of >1. The major risk drivers for human health are cobalt-60, cesium-137 and europium-152. The ecological risk driver is strontium-90. Qualitative risk assessments were not completed for the 116-C-2A pluto crib and the 116-C-2B pluto crib pump station because the detected contamination was below the 4.6 m (15 ft) risk assessment cutoff depth.

All three high-priority waste sites are recommended to remain on the IRM path (Table ES-2). The 116-C-2A pluto crib remains on the IRM path due to potential impact to groundwater. The 116-C-2B pluto crib pump station remains on the IRM path because groundwater impacts are unknown. The 116-C-2C pluto crib sand filter is recommended to remain on the IRM path due to a high human-health risk and an EHQ >1.

All eleven solid waste burial grounds are to remain on the IRM pathway as designated in the 100-BC-2 Operable Unit Work Plan (DOE-RL 1993a). Review of available data substantiates the original designation of the burial grounds.

Table ES-1 100-BC-2 Operable Unit High-Priority Sites, Low-Priority Sites and Solid Waste Burial Grounds

HIGH-PRIORITY SITES
116-C-2A Pluto Crib 116-C-2B Pluto Crib Pump Station 116-C-2C Pluto Crib Sand Filter
LOW-PRIORITY SITES
116-C-3 Storage Tanks 116-C-6 Pond 1607-B-8 Septic System 1607-B-9 Septic System 1607-B-10 Septic System 1607-B-11 Septic System
SOLID WASTE BURIAL GROUNDS
118-B-1 Burial Ground 118-B-2 Burial Ground 118-B-3 Burial Ground 118-B-4 Burial Ground 118-B-6 Burial Ground 118-C-1 Burial Ground 118-C-2 Ball Storage Tank 118-C-4 Horizontal Control Rod Storage Cave 128-C-1 Burning Pit 132-C-1 Reactor Exhaust Stack Burial Site 132-C-3 Exhaust Air Filter Building

9413293.2991

Table ES-2 IRM Recommendations for the 100-BC-2 High-Priority Sites

Waste Site	Qualitative Risk Assessment		Conceptual Model	Exceeds ARAR	Probable Current Impact to Groundwater	Potential for Natural Attenuation by 2018	IRM Candidate yes/no
	Low Frequency Scenario	EHQ > 1					
116-C-2A	NA	NA	Adequate	No	Yes	NA	Yes
116-C-2B	NA	NA	Adequate	No	Unknown [1]	NA	Yes
116-C-2C	High	Yes	Adequate	No	Unknown [1]	No	Yes
118-B-1, 118-B-2, 118-B-3, 118-B-4, 118-B-6, 118-C-1, 118-C-2, 118-C-4, 128-C-1, 132-C-1, 132-C-3 burial grounds							Yes

EHQ = environmental hazard quotient calculated by the qualitative ecological risk assessment
NA = not assessed due to contamination >4.6 m (15 ft), which is the qualitative risk assessment depth cutoff
ARAR = applicable or relevant and appropriate requirements, specifically the Washington State Model Toxics Control Act Method B concentration values for soils
IRM = interim remedial measures
[1] = No up or downgradient monitoring wells to assess groundwater impact, site remains on IRM path

9413202.2992

ACRONYMS

ARAR	applicable or relevant and appropriate requirements
ARCL	allowable residual contamination level
CERCLA	Comprehensive Environmental Response Compensation and Liability Act
CLP	Contract Laboratory Program
CMS	corrective measures study
COPC	contaminants of potential concern
CRDL	contract required detection limit
DOE	U.S. Department of Energy
Ecology	Washington Department of Ecology
EHQ	environmental hazard quotient
EII	Environmental Investigation Instructions
EMI	electro-magnetic induction
EPA	U.S. Environmental Protection Agency
ERA	expedited response actions
FS	feasibility study
GM	Geiger-Mueller
GPR	ground-penetrating radar
HCR	horizontal control rods
HCRL	Hanford Cultural Resources Laboratory
HI	hazard index
HQ	hazard quotient
HSRAM	Hanford Site Risk Assessment Methodology
HPPS	Hanford Past-Practice Strategy
ICR	incremental cancer risk
IDL	instrument detection limit
IRM	interim remedial measures
LFI	limited field investigation
LTP	low-range totem pole
MTCA	Model Toxics Control Act
NHPA	National Historic Preservation Act
NOEL	no observable effect level
ORIA	EPA Office of Radiation and Indoor Air
OVM	organic vapor monitor
PEF	particle emission fraction
QC	quality control
QRA	qualitative risk assessment
RCRA	Resource Conservation and Recovery Act
RESRAD	residual radioactive material guidelines, and software model
RFI	RCRA facility investigation
RI	remedial investigation
ROD	Record of Decision
SARA	Superfund Amendments and Reauthorization Act of 1986

9413293.2993

ACRONYMS (cont)

semi-VOL	semi-volatile organic compounds
TAL	target analyte list
TBC	to-be-considered
Tri-Party Agreement	Hanford Federal Facility Agreement and Consent Order
UTL	upper threshold limit
VOC	volatile organic compound
VSR	vertical safety rods
WAC	Washington Administrative Code
WHC	Westinghouse Hanford Company

9413293.2994

CONTENTS

1.0 INTRODUCTION 1-1
1.1 THE HANFORD PAST-PRACTICE STRATEGY AND THE 100-BC-2 LFI 1-1
1.1.1 Hanford Past-Practice Strategy 1-1
1.1.2 Application of the Hanford Past-Practice Strategy to the 100-BC-2 Operable Unit 1-3
1.2 OPERABLE UNIT BACKGROUND 1-5
1.3 QUALITATIVE RISK ASSESSMENT 1-5

2.0 APPROACH 2-1
2.1 SOURCE INVESTIGATION 2-1
2.2 AGGREGATE AREA INVESTIGATION 2-1
2.2.1 Geologic Investigation 2-2
2.2.2 Ecological Investigation 2-3
2.2.3 Cultural Resources Review 2-4
2.2.4 Hanford Site Background 2-5
2.3 100-BC-2 LFI FIELD AND SAMPLING ACTIVITIES 2-5
2.3.1 Vadose Zone Borehole Drilling 2-6
2.3.2 Field Screening 2-6
2.3.3 Geophysical Investigations 2-7
2.3.4 Sampling 2-8
2.3.5 Historical Contamination Data 2-8
2.3.6 Analogous Site Investigations 2-8
2.4 SAMPLE ANALYSIS 2-9
2.5 DATA VALIDATION 2-9
2.6 QUALITATIVE RISK EVALUATION OVERVIEW 2-10
2.6.1 Data Evaluation 2-11
2.6.2 Uncertainty Associated with Data Evaluation 2-12
2.6.3 Human Health Risk Evaluation Process 2-13
2.6.4 Uncertainty Associated with Human Health Risk Evaluation 2-16
2.6.5 Ecological Risk Evaluation Process 2-18
2.6.6 Uncertainty Associated With Ecological Risk Evaluation 2-22
2.7 IDENTIFICATION OF APPLICABLE OR RELEVANT AND APPROPRIATE REQUIREMENTS 2-22

3.0 INVESTIGATION RESULTS AND CONCLUSIONS 3-1
3.1 BACKGROUND SOIL SAMPLING 3-2
3.2 HIGH-PRIORITY SITES 3-2
3.2.1 116-C-2A Pluto Crib 3-2
3.2.2 116-C-2B Pluto Crib Pump Station 3-6
3.2.3 116-C-2C Pluto Crib Sand Filter 3-8
3.3 SOLID WASTE BURIAL GROUNDS 3-11
3.3.1 118-B-1 Burial Ground 3-12

9413293.2995

CONTENTS (cont)

3.3.2 118-B-2 Burial Ground 3-17
3.3.3 118-B-3 Burial Ground 3-17
3.3.4 118-B-4 Burial Ground 3-18
3.3.5 118-B-6 Burial Ground 3-19
3.3.6 118-C-1 Burial Ground 3-19
3.3.7 118-C-2 Ball Storage Tank 3-22
3.3.8 118-C-4 Horizontal Control Rod Storage Cave 3-23
3.3.9 128-C-1 Burning Pit 3-24
3.3.10 132-C-1 Reactor Exhaust Stack Burial Site 3-24
3.3.11 132-C-3 Exhaust Air Filter Building Burial Site 3-25

4.0 QUALITATIVE RISK ASSESSMENT SUMMARY AND CONCLUSIONS 4-1
4.1 HUMAN HEALTH EVALUATION 4-1
4.1.1 Results of the Human Health Evaluation 4-1
4.1.2 Summary of Key Uncertainties in the Human Health Evaluation. 4-2
4.2 ECOLOGICAL EVALUATION 4-2
4.2.1 Summary of Key Uncertainties in the Ecological Evaluation . . . 4-3

5.0 RECOMMENDATIONS 5-1
5.1 HIGH-PRIORITY SITE IRM CANDIDATE EVALUATION CRITERIA 5-1
5.1.1 Qualitative Risk Assessment 5-1
5.2.2 Conceptual Model 5-2
5.2.3 Applicable or Relevant and Appropriate Requirements 5-2
5.2.4 Current Impact on Groundwater 5-2
5.2.5 Potential for Natural Attenuation 5-2
5.3 HIGH-PRIORITY SITE IRM CANDIDATE RECOMMENDATIONS . . . 5-3
5.3.1 116-C-2A Pluto Crib 5-3
5.3.2 116-C-2B Pluto Crib Pump Station 5-4
5.3.3 116-C-2B Pluto Crib Sand Filter 5-4
5.4 SOLID WASTE BURIAL GROUND RECOMMENDATIONS 5-4

6.0 REFERENCES 6-1

APPENDIX:

A - SPECTRAL GAMMA-RAY GEOPHYSICAL LOG A-1
B - SUMMARY OF RADIONUCLIDE ANALYTICAL RESULTS AFTER DORIAN AND RICHARDS (1978) B-1

FIGURES:

1-1 Hanford Past-Practice Strategy Decision Flow Chart 1F-1

9413293.2996

CONTENTS (cont)

FIGURES (cont):

1-2 Map of the 100 B/C Area 1F-2
2-1 Conceptual Hydrostratigraphic Column for the 100 B/C Area 2F-1
2-2 Location of the 199-B9-4 Borehole within the 116-C-2A Pluto Crib 2F-2
2-3 Conceptual Model for Exposure Pathways for 100-BC-2 Operable Unit Soils 2F-3
2-4 Conceptual Model of Terrestrial Foodweb Relationships 2F-4
3-1 Map View of the 116-C-2 Pluto Crib System 3F-1
3-2 Cross-Section View of the 116-C-2 Pluto Crib System 3F-2
3-3 Schematic of the 116-C-2A Pluto Crib 3F-3
3-4 Summary Diagrams of the 199-B9-4 Borehole Data 3F-4
3-5 Schematic of the 116-C-2 Pluto Crib System Showing Approximate Locations of Dorian and Richards 1978 Testholes 3F-5
3-6 Schematic of the 116-C-2B Pluto Crib Pump Station 3F-6
3-7 Schematic of the 116-C-2C Pluto Crib Sand Filter 3F-7
3-8 Relationship between the Dorian and Richards 118-B-1 Burial Ground Testholes and the Waste Trenches 3F-8
5-1 Conceptual Model Contaminant Exposure Pathway for the 100-BC-2 Operable Unit 5F-1

TABLES:

ES-1 100-BC-2 Operable Unit High-Priority Sites, Low-Priority Sites and Solid Waste Burial Grounds EST-1
ES-2 IRM Recommendations for the 100-BC-2 High-Priority Sites EST-2
1-1 100-BC-2 Operable Unit High-Priority Sites, Low-Priority Sites and Solid Waste Burial Grounds 1T-1
1-2 100 Area Analogous Sites 1T-2
2-1 100-BC-2 Operable Unit Characterization Activities 2T-1a
2-2 Summary Statistics and Upper Threshold Limits for Inorganic Analytes 2T-2
2-3 LFI Activities for 100-BC-2 Operable Investigated Waste Sites 2T-3
2-4 Contaminants of Potential Concern Screening Process: 116-C-2A Pluto Crib LFI Data 2T-4a
2-5 Contaminants of Potential Concern Screening Process: 116-C-2B Pluto Crib Pump Station Historical Data 2T-5
2-6 Contaminants of Potential Concern Screening Process: 116-C-2C Pluto Crib Sand Filter Historical Data 2T-6
2-7 Contaminants of Potential Concern Screening Process: 118-B-1 Burial Ground 2T-7
2-8 Summary of Carcinogenic Information for Radionuclides Detected at the 100-BC-2 Operable Unit 2T-8
2-9 General Parameters[d] Used for Ecological Dose (Radionuclide) Equations[a] 2T-9
2-10 Potential Federal Chemical-Specific Applicable or Relevant and Appropriate Requirements for the 100-BC-2 Operable Unit 2T-10a

CONTENTS (cont)

TABLES (cont):

2-11 Potential State Chemical-Specific Applicable or Relevant and Appropriate Requirements of the 100-BC-2 Operable Unit 2T-11a
2-12 Potential Chemical-Specific To-Be-Considered Guidance for the 100-BC-2 Operable Unit 2T-12a
2-13 Potential Federal Location-Specific Applicable or Relevant and Appropriate Requirements for the 100-BC-2 Operable Unit 2T-13
2-14 Potential State Location-Specific Applicable or Relevant and Appropriate Requirements for the 100-BC-2 Operable Unit 2T-14
2-15 Potential Location-Specific To-Be-Considered Guidance for the 100-BC-2 LFI 2T-15
3-1 Summary of Analytical Results for Nonwaste Site Samples: 100-BC-1 and 100-BC-2 Operable Unit LFI 3T-1a
3-2 Summary of Analytical Results for the 199-B9-4 Borehole: 116-C-2A Pluto Crib 3T-2a
3-3 Summary of Analytical Results for the Concrete Sample from the 199-B9-4 Borehole: 116-C-2A Pluto Crib 3T-3
3-4 Summary of Radionuclide Analytical Results for the Dorian and Richards (1978) Testholes: 116-C-2A Pluto Crib (Decayed to July 1993) 3T-4
3-5 Analogous Site Comparison for 116-C-2A Pluto Crib System 3T-5a
3-6 100-BC-2 Operable Unit Waste Sites Up and Down Gradient Well Designations 3T-6
3-7 Groundwater Monitoring Wells 199-B9-1 and 199-B9-2 COPC Concentrations: From 100-BC-5 LFI (DOE-RL 1993c) 3T-7
3-8 Summary of Radionuclide Analytical Results for the Dorian and Richards (1978) Testhole: 116-C-2B Pluto Crib Pump Station (Decayed to July 1993) 3T-8
3-9 Summary of Radionuclide Analytical Results for the Dorian and Richards (1978) Testholes and Grab Samples: 116-C-2C Pluto Crib Sand Filter (Decayed to July 1993) 3T-9
3-10 Human Health Risk Characterization: 116-C-2C Pluto Crib Sand Filter 3T-10
3-11 Human Health Risk Characterization - Projected to Year 2018: 116-C-2C Pluto Crib Sand Filter 3T-11
3-12 Estimated Dose Rate for the Great Basin Pocket Mouse: 116-C-2C Pluto Crib Sand Filter 3T-12
3-13 Summary of Environmental Hazard Quotients for Radionuclides by Waste Site 3T-13
3-14 Summary of In Situ Geiger-Mueller and LTP Readings from the Dorian and Richards (1978) Testholes: 118-B-1 Burial Ground 3T-14a
3-15 Summary of Radionuclide Analytical Results for the Dorian and Richards (1978) Testholes: 118-B-1 Burial ground (Decayed to July 1993) 3T-15
3-16 Groundwater Monitoring Well 199-B8-6 COPC Concentrations: From 100-BC-5 LFI (DOE-RL 1993b) 3T-16
3-17 Human Health Risk Characterization: 118-B-1 Burial Ground 3T-17

CONTENTS (cont)

TABLES (cont):

3-18 Human Health Risk Characterization - Projected to Year 2018: 118-B-1 Burial Ground 3T-18
3-19 Summary of the Human Health Qualitative Risk Assessment for the 100-BC-2 Operable Unit's High-Priority Sites and Solid Waste Burial Grounds 3T-19
3-20 Estimated Dose Rate for the Great Basin Pocket Mouse: 118-B-1 Burial Ground 3T-20
3-21 Groundwater Monitoring Wells 199-B4-8 and 199-B9-3 COPC Concentrations: From 100-BC-5 LFI (DOE-RL 1993b) 3T-21
3-22 Groundwater Monitoring Wells 199-B4-1 and 199-B4-4 COPC Concentrations: From 100-BC-5 LFI (DOE-RL 1993b) 3T-22
3-23 Groundwater Monitoring Wells 199-B9-1, 199-B9-2 and 199-B9-3 COPC Concentrations: From 100-BC-5 LFI (DOE-RL 1993b) 3T-23
4-1 Summary of Contaminant Identification and Exposure Assessment Uncertainties for the 100-BC-2 Operable Unit Sites 4T-1
5-1 Conceptual Model for 100-BC-2 Operable Unit High-Priority Sites 5T-1
5-2 Hanford Site Background 95% Upper Threshold Limits Model Toxics Control Act Method B Guidelines for Inorganic Analytes 5T-2
5-3 IRM Recommendations for the 100-BC-2 High-Priority Sites 5T-3
B-1 Summary of Radionuclide Analytical Results for the Dorian and Richards (1978) Testholes: 116-C-2A Pluto Crib BT-1
B-2 Summary of Radionuclide Analytical Results for the Dorian and Richards (1978) Testholes: 116-C-2B Pluto Crib Pump Station BT-2
B-3 Summary of Radionuclide Analytical Results for the Dorian and Richards (1978) Testholes: 116-C-2C Pluto Crib Sand Filter BT-3
B-4 Summary of Radionuclide Analytical Results for the Dorian and Richards (1978) Testholes: 118-B-1 Burial Ground BT-4

9413293.2999

1.0 INTRODUCTION

This limited field investigation (LFI) report presents data collection and analysis activities and the qualitative risk assessment (QRA) conducted during the 100-BC-2 Source Operable Unit LFI. A LFI report is required, in terms of the *Hanford Past-Practice Strategy* (HPPS) (DOE-RL 1991a), when waste sites are to be considered for action as interim remedial measures (IRM). The purpose of the report is to: identify those sites that are recommended to remain as candidates for IRM; provide a preliminary summary of site characterization studies; refine the conceptual model as needed; identify contaminant- and location-specific applicable or relevant and appropriate requirements (ARAR); and provide a QRA associated with the sites. This assessment includes consideration of whether contaminant concentrations pose an unacceptable risk that warrants action through IRM. These objectives are described fully in the *Remedial Investigation/Feasibility Study Work Plan for the 100-BC-2 Operable Unit* (DOE-RL 1993a)

In order to limit the size of the report and improve its readability, reliance is placed on the referral to other documents for specific details. This document is unique in that it is based on Hanford-specific agreements discussed in the *Hanford Federal Facility Agreement and Consent Order* (Tri-Party Agreement) (Ecology et al. 1990), the HPPS, *Hanford Site Risk Assessment Methodology* (HSRAM) (DOE-RL 1994a), and the *Remedial Investigation/Feasibility Study Work Plan for the 100-BC-2 Operable Unit* (DOE-RL 1993a) and must be viewed in this context. An IRM, for example, is defined in broad terms and is not restricted to limited or near term actions. It allows for interim action with the final goal of achieving final action levels. An IRM may not be decided upon if it is likely not to lead to a final Record of Decision (ROD). A QRA is used only to assess risk for IRM determination and is not intended to define current risk or baseline risk in a traditional sense. The final decision to conduct an IRM will rely on many factors including; the QRA, ARAR, future land-use, point of compliance, time of compliance, a bias-for-action and the threat to human health and the environment including the threat to groundwater.

1.1 THE HANFORD PAST-PRACTICE STRATEGY AND THE 100-BC-2 LFI

1.1.1 Hanford Past-Practice Strategy

The signatories to the Tri-Party Agreement (Ecology et al. 1990); the U.S. Department of Energy (DOE), U.S. Environmental Protection Agency (EPA), and Washington State Department of Ecology (Ecology), recognized the need for a new strategy of Resource Conservation and Recovery Act (RCRA)/Comprehensive Environmental Response Compensation and Liability Act (CERCLA) integration to provide greater uniformity in the applicability of requirements to the Hanford Site. Additionally, the signatories agreed that proceeding with the traditional CERCLA approach would likely require too much time and too large a portion of a limited budget be spent before actual cleanup would occur. Another motivation for a new strategy was the need to coordinate past-practice investigations with RCRA closure activities since some operable units contain

RCRA treatment, storage, and disposal facilities. The new strategy, the HPPS, is described and justified in *The Hanford Federal Facility Agreement and Consent Order Change Package*, dated May 16, 1991 (Ecology et al. 1991).

In response to the above concerns, the three parties have decided to manage and implement all past-practice investigations under one characterization and remediation strategy. In order to enhance the efficiency of ongoing remedial investigation/feasibility study (RI/FS) and RCRA facility investigation (RFI)/corrective measures study (CMS) activities at the 100 Area of the Hanford Site, and to expedite the ultimate goal of cleanup, more emphasis will be placed on initiating and completing waste site cleanup through interim actions.

This strategy streamlines the past-practice remedial action process and provides new concepts for:

- accelerating decision-making by maximizing the use of existing data consistent with data quality objectives

- undertaking expedited response actions (ERA) and/or IRM, as appropriate, to either remove threats to human health and welfare and the environment, or to reduce risk by reducing toxicity, mobility, or volume of contaminants.

The HPPS describes the concepts and framework for the RI/FS process in a manner that has a bias-for-action through optimizing the use of interim actions, culminating with decisions for final remedies on both an operable unit and 100 Area aggregate scale. The strategy focuses on reaching early decisions to initiate and complete cleanup projects, maximizing the use of existing data, coupled with focused short-time-frame investigations, where necessary. As more data become available on contamination problems and associated risks, the details of the longer term investigations and studies will be better defined.

Figure 1-1 is a decision flow chart that shows the HPPS process. The strategy includes three paths for interim decision-making and a final remedy-selection process for the operable unit that incorporates the three paths and integrates sites not addressed in those paths. An important element of this strategy is the application of the observational approach, in which characterization data are collected concurrently with cleanup.

As shown on Figure 1-1, the three paths for interim decision-making are:

- An ERA path, where an existing or near-term unacceptable health or environmental risk from a site is determined or suspected, and a rapid response is necessary to mitigate the problem.

- An IRM path, where existing data are sufficient to formulate a conceptual model and perform a QRA. If a decision is made to proceed with an IRM, the process will advance to select an IRM remedy, and may include a focused FS, if needed, to select a remedy.

- A LFI path, where a LFI can provide sufficient data to formulate a conceptual model and perform a QRA. The data can be obtained in a less formal manner than that needed to support the operable unit ROD; however, regardless of the scope of the LFI, it is a part of the RI process, and not a substitute for it.

The near-term past-practice strategy for the 100 Area provides for ERA, IRM, and LFI for individual waste sites, grouped waste sites, and contaminated groundwater. The LFI is an integral part of the RI/FS process and functions as a focused RI for selection of IRM. The information obtained from the LFI and interim actions may be sufficient to perform the baseline risk assessment, and to select the remedy for the operable unit. If the data are not sufficient, additional investigations and studies will be performed to the extent necessary to support the operable unit remedy selection. These investigations would be performed within the framework and process defined for RI/FS programs.

9413293.3002

1.1.2 Application of the Hanford Past-Practice Strategy to the 100-BC-2 Operable Unit

Implementation of the HPPS at the 100-BC-2 Operable Unit began with the development of Revision 0 of the *Remedial Investigation/Feasibility Study Work Plan for the 100-BC-2 Operable Unit* (DOE-RL 1993a). As noted in Section 4.2.2 of the work plan and Section 4.2.1 of the *Remedial Investigation/Feasibility Study Work Plan for the 100-BC-1 Operable Unit* (DOE-RL 1992a) the three parties designated all known and suspected areas of contamination as either high- or low-priority, or as a solid waste burial ground (no priority). The classification of sites was based on the collective knowledge of the three parties and information contained in existing work plans. The site classification decisions were made during joint meetings with the three parties and are documented by meeting minutes that are part of the administrative record. Sites classified as high-priority or solid waste burial grounds were thought to pose a risk(s) through one or more pathways sufficient to recommend streamlined action via an IRM. Low-priority sites were thought not to pose risks sufficient to recommended streamlining. The three parties agreed that:

- none of the high-priority sites pose risks that would require an ERA

- limited field sampling was sufficient for those high-priority sites where data are deemed insufficient to formulate the conceptual model and support the QRA

- material in the solid waste burial grounds was too diverse for limited field sampling to add to the historical data

- investigative activities for the low-priority sites would be deferred to the final RI

- certain activities would be more efficient to implement at the 100 Area aggregate or Hanford Site scale instead of the operable unit scale.

The high- and low-priority sites and solid waste burial grounds for the 100-BC-2 Operable Unit are listed in Table 1-1.

The LFI and QRA are part of the 100-BC-2 RI/FS, as described by the work plan (DOE-RL 1993a). The work plan includes the following topics that are directly applicable to the 100-BC-2 LFI:

- operable unit site description (Section 2.1)
- physical setting (Section 2.2)
- operable unit conceptual model (Chapter 3)
- data quality objectives (Section 4.1)
- data needs (Section 4.1.2)
- 100-BC-2 Operable Unit sampling and analysis approach (Section 4.2)
- LFI (Section 5.1.1)
- 100 Area aggregate studies and Hanford Site studies (Section 5.1.1).

The conceptual model for the 100-BC-2 Operable Unit was developed during the RI scoping process. The conceptual model is presented in Chapter 5 of the work plan (DOE-RL 1993a). The conceptual model addresses the following:

- structure and process of the waste sites
- source of contaminants
- type of contaminants
- nature and extent of contamination
- known and potential routes of migration
- known and potential human and environmental receptors.

The conceptual model has been updated with data acquired through the LFI and is presented in Chapter 3 of this report.

The 100-BC-2 LFI began the investigative phase of the RI for a select number of high-priority sites. The LFI included data compilation, nonintrusive investigations, intrusive investigations, evaluation of information from 100 Area aggregate studies and data evaluation.

Low-priority site investigations are deferred until the final remedy selection phase for the operable unit (see Figure 1-1). Under the past-practice strategy, preliminary investigations will be limited to evaluation of existing data directly from the operable unit or through evaluation of data from analogous sites. Table 1-2 presents a listing of analogous sites relative to sites at the 100-BC-2 Operable Unit.

The solid waste burial grounds are to be addressed through the IRM pathway. Analogous facilities will be used for initial screening of the burial grounds and the observational approach will be used during remediation.

1.2 OPERABLE UNIT BACKGROUND

The 100-BC-2 Operable Unit is one of three operable units associated with the 100 B/C Area at the Hanford Site. The 100-BC-1 Operable Unit and 100-BC-2 Operable Unit are source operable units, which are composed of waste sites. The 100-BC-2 wastes sites are those liquid and sludge disposal sites generally associated with operation of the C Reactor. Also included with the 100-BC-2 Operable Unit are the solid waste burial grounds associated with the 100 B/C Area. The third operable unit, 100-BC-5 addresses the groundwater.

The geographical area encompassing the 100-BC-2 Operable Unit is located adjacent to the 100-BC-1 Operable Unit. In general, the 100-BC-2 Operable Unit contains waste units associated with the original plant facilities constructed to support C Reactor operation and liquid, sludge, and solid waste units. Figure 1-2 shows the approximate boundaries of the 100-BC-2 Operable Unit defined by the waste units it includes, and its location with respect to the other B/C Area operable units. The 100-BC-2 Operable Unit encompasses approximately 1.7 km^2 (0.6 mi^2). It lies predominantly within the northern portion of Section 14, and the northeast portion of Section 15 of Township 13N, Range 25E. It is bound by North American Datum 1983 (NAD 83) metric Washington State plane north/south coordinates N143,700 and N144,300 and east/west coordinates E564,200 and E565,600.

The 100 B/C Area contains two reactors; the B Reactor associated with the 100-BC-1 Source Operable Unit and the C Reactor associated with the 100-BC-2 Source Operable Unit. The B Reactor, constructed in 1943, operated from 1944 through 1968, when it was retired from service. The C Reactor, constructed in 1951, operated from 1952 until 1969, when it also was retired from service. The C Reactor shared some of the ancillary facilities constructed for the B Reactor, such as the river water pump house and reservoir and the inert gas system. Currently, the only active facility within the boundaries of the 100-BC-2 Operable Unit is the 151-B electrical substation.

The 100-BC-5 Groundwater Operable Unit is described in the *Remedial Investigation/Feasibility Study Work Plan for the 100-BC-5 Operable Unit* (DOE-RL 1992b). The results of a recently completed LFI for the 100-BC-5 Operable Unit are presented in the *Limited Field Investigation Report for the 100-BC-5 Operable Unit* (DOE-RL 1993b).

1.3 QUALITATIVE RISK ASSESSMENT

The QRA portion of this report provides information to assist in making defensible decisions on the necessity of IRM at the 100-BC-2 Operable Unit. The QRA is an evaluation of risk for a predefined set of human and ecological exposure scenarios. It is not intended to replace or be a substitute for a baseline risk assessment. The QRA is streamlined to consider only two human health scenarios; frequent- and occasional-use; with three exposure pathways; soil ingestion, fugitive dust inhalation, and external radiation exposure; and a limited ecological evaluation. The use of these scenarios and pathways was agreed to by the 100 Area Tri-Party unit managers (December 21, 1992 and February 8, 1993).

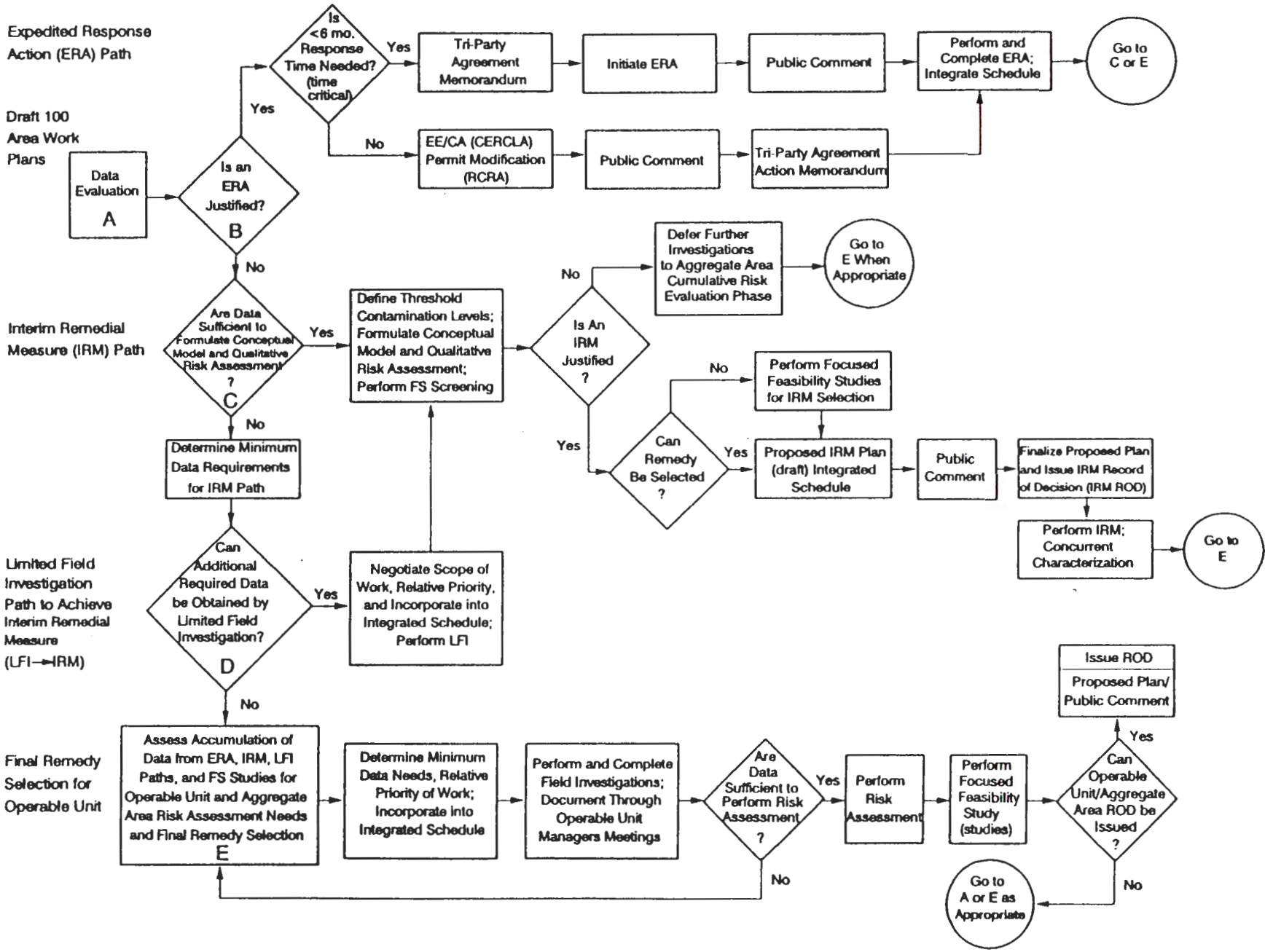

Figure 1-1 Hanford Past-Practice Strategy Decision Flow Chart

Figure 1-2 Map of the 100 B/C Area

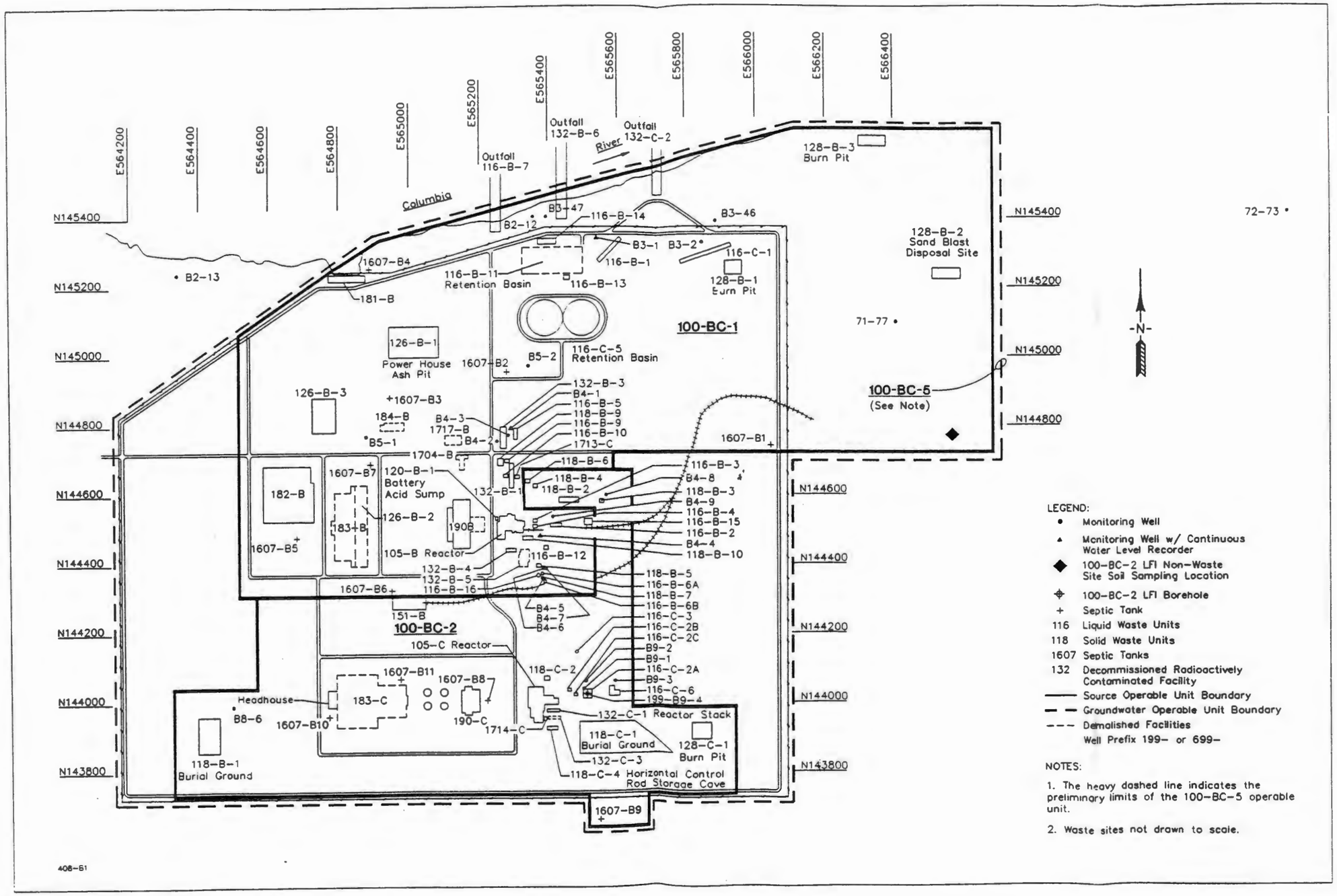

9413293.3006

Table 1-1 100-BC-2 Operable Unit High-Priority Sites, Low-Priority Sites and Solid Waste Burial Grounds

HIGH-PRIORITY SITES
116-C-2A Pluto Crib 116-C-2B Pluto Crib Pump Station 116-C-2C Pluto Crib Sand Filter
LOW-PRIORITY SITES
116-C-3 Storage Tanks 116-C-6 Pond 1607-B-8 Septic System 1607-B-9 Septic System 1607-B-10 Septic System 1607-B-11 Septic System
SOLID WASTE BURIAL GROUNDS
118-B-1 Burial Ground 118-B-2 Burial Ground 118-B-3 Burial Ground 118-B-4 Burial Ground 118-B-6 Burial Ground 118-C-1 Burial Ground 118-C-2 Ball Storage Tank 118-C-4 Horizontal Control Rod Storage Cave 128-C-1 Burning Pit 132-C-1 Reactor Exhaust Stack Burial Site 132-C-3 Exhaust Air Filter Building

9413294.3007

Table 1-2 100 Area Analogous Sites

100-BC-2 Operable Unit Waste Site	100-BC-1 Operable Unit	100 D/DR Area	100 H Area	100 K Area	100 F Area
116-C-2 Pluto Crib System	116-B-3	116-D-2A 116-DR-4	116-H-4	none	116-F-4
118-B-1 and 118-C-1 Burial Grounds	none	118-D-1 118-D-2 118-D-3	118-H-1	none	118-F-1 118-F-2
118-C-4 Rod Cave	none	none	105-H Rod Cave	118-KW-2	none
128-C-1 Burn Pit	128-B-1	128-D-1 128-D-2	128-H-1 128-H-2	none	128-F-1 128-F-2
132-C-1 Stack Burial Site	none	none	132-H-1	none	132-F-4
132-C-3 Filter Building Burial Site	132-B-4	117-D	132-H-2	none	none

9413273.3008

2.0 APPROACH

The LFI activities for the sites identified in the 100-BC-2 Operable Unit work plan (DOE-RL 1993a) consisted of an intrusive investigation, reconnaissance surface based geophysical surveys, evaluation of historical data, review of analogous site information, and completion of a QRA. Through this process, an evaluation of all of the high-priority sites, burial grounds and low-priority sites identified in the 100-BC-2 Operable Unit work plan (DOE-RL 1993a) was completed.

The work plan divides the site characterization activities into 13 tasks. Table 2-1 lists the tasks, subtasks and how each task is addressed in the LFI report.

The LFI activities, as well as the aggregate area investigations, are discussed in greater detail in the following sections. Investigation results and summaries for the 100-BC-2 Operable Unit LFI are discussed in Chapter 3 of this report.

9413293.3009

2.1 SOURCE INVESTIGATION

An integral part of the RI/FS process for the 100-BC-2 Operable Unit has been the acquisition, evaluation, and utilization of records pertaining to the construction, operation, and decontamination/decommissioning of the reactor and related 100 B/C facilities. This information is categorized as "historical information", and includes operations records and reports, engineering drawings, photographs, interviews with former or retired operations personnel, and data from sampling and analysis of facilities and the local environment. Historical information sources for this LFI are described in Section 2.3.5.

2.2 AGGREGATE AREA INVESTIGATION

The 100 Areas aggregate and Hanford Sitewide investigations provide an integrated analysis of selected issues at a scale larger than an individual operable unit. Investigations which were studied at a larger scale than the 100-BC-2 Operable Unit are:

- geologic investigation
- ecological investigation
- cultural resources
- Hanford Site background.

These investigations are discussed below.

2.2.1 Geologic Investigation

Detailed results of the geologic investigation of the 100 B/C Area are contained in *Geology of the 100 B/C Area* (Lindberg 1993). The stratigraphy of the 100 B/C Area (Figure 2-1) is (from youngest to oldest):

- discontinuous Holocene deposits
- Hanford formation
- Ringold Formation
- Columbia River Basalt Group and interbedded Ellensburg Formation.

The Holocene deposits of the 100-BC-2 Operable Unit are predominately eolian silty fine-grained sands. These deposits range in thickness from predominately <0.9 m (3 ft) to <0.3 m (1 ft). In areas of construction, the Holocene deposits have been removed.

The Hanford formation is represented by gravel-dominated facies in the 100-BC-2 Operable Unit, with occasional isolated intervals of sand-dominated facies. The formation is over 31 m (100 ft) thick in the southeastern portion of the operable unit and uniformly thins to the northwest. These sediments are part of a three-facies formation deposited during Pleistocene cataclysmic flooding on an erosional surface which marks the top of the Ringold Formation.

The Ringold Formation consists of seven units and interbeds in the 100-BC-2 Operable Unit. From upper to lower these are:

- Unit E, in the BC-2 portion of the B/C Area, is not clearly defined. It is probably a coarse-grained fluvial sequence ranging in thickness from 13 to 40 m (43 to 130 ft).

- Paleosols and Overbank deposits are a sequence of muddy sediments approximately 34 m (110 ft) thick. The lower half of the sequence shows considerable carbonate development, indicating paleosols.

- Unit C consists of a series of coarsening-upward fluvial channel deposits. These sequences grade from silty or gravelly sand to sandy gravel. In the northern portion of the B/C Area this unit is approximately 34 m (113 ft) thick.

- Paleosols and Overbank deposits are a 15 m (50 ft) thick set of sediments grading from silt upward into silty sands and gravelly muds.

- Unit B correlates to a set of two gravelly sand intervals interbedded with paleosol and overbank sandy muds. The thicknesses of the sand intervals are 2.4 and 1.8 m (8 and 6 ft); the sandy muds are approximately 2.7 m (9 ft) thick.

- Lower Mud Unit is a 44 m (143 ft) thick, blue to blue-grey lacustrian mud deposit.

- Unit A consists of a 18 m (60 ft) thick deposit of sandy gravel, sand and sandy silt.

The Columbia River Basalt Group is an assemblage of tholeiitic, continental flood basalts of miocene age (DOE 1988, Reidel and Hooper 1989). The upper most basalt unit underlying the majority of the Hanford site is the Elephant Mountain Member of the Saddle Mountains Basalt (Reidel and Fecht 1981).

The Ellensburg Formation consists of volcaniclastic and siliciclastic deposits that occur between basalt flows of the Columbia River Basalt Group (DOE 1988, Smith 1988).

Detailed results from the groundwater investigation can be found in *The Limited Field Investigation Report for the 100-BC-5 Operable Unit* (DOE-RL 1993b). The following summary of groundwater information is from that LFI report. Groundwater in the 100 B/C Area flows in a northerly direction towards the Columbia River. The depth to groundwater at high river stage ranges from 22.89 m (75.1 ft) in well 199-B4-4, located near the B Reactor, to 15.06 m (49.41 ft) in well 199-B3-47, located due north of the 116-B-14 sludge disposal trench. The estimated hydraulic conductivities in the uppermost aquifer range from 2×10^{-2} cm/s (50 ft/d) to 5×10^{-3} cm/s (15 ft/d). The 100-BC-5 QRA (WHC 1993a) human health risk assessment identified bis(2-ethylhexyl)phthalate, tritium, carbon-14, strontium-90 and technetium-99 as contaminants of concern. The environmental risk assessment for aquatic toxicity for fish from nonradioactive contaminants indicated that aluminum, bis(2-ethylhexyl)phthalate, hexavalent chromium, iron, lead, and mercury exceeded either an acute or chronic toxicity value. Because groundwater contamination in the 100-BC-5 Operable Unit may impact the Columbia River, the potential impact of 100-BC-2 Source Operable Unit waste sites on groundwater is an important consideration when recommending IRM.

2.2.2 Ecological Investigation

The 100 Area operable units, which cover a total area of 18.3 km^2 (1,834 ha) are topographically and environmentally similar. Each is situated along the Columbia River bank, with the reactor located on a high gravel terrace left by the recession of glacial floodwater at the end of the Pleistocene. Shoreline areas grade from steep banks with narrow cobble beaches to broad, stepped, well-defined floodplain terraces with gently sloping beaches. The floodplain terraces consist of sand deposited during the Holocene epoch and occur on at least two levels, one dating to the early or middle Holocene and another representing the later Holocene. Inland areas are broad flats broken only by stabilized dunes. The area from west of the 100 N Area to the western edge of the 100 D Area differs from this general pattern. The large, rounded gravel mounds in that vicinity are chaotic ripple marks produced by the rush of catastrophic Pleistocene floodwater.

Vegetation in the 100 Areas is dominated by cheatgrass (*Bromus tectorum*), with scattered big sagebrush (*Artemisia tridentata*), tumble mustard (*Sysimbrium spp.*), Russian thistle (*Salsola kali*), rabbit brush (*Chrysothamnus spp.*), and needle and thread grass (*Stipa comata*). Small groves of deciduous trees and shrubs, usually black locust (*Robina pseudo-acacia*), willow (*Salix spp.*), and mulberry (*Morus spp.*) grow along the river bank at the site of early twentieth-century homesteads.

Ecological surveys and sampling related to CERCLA have been conducted in the 100 Areas and in and along the Columbia River adjacent to the 100 Areas. Sampling included plants with either a past history of documented contaminant uptake or an important position in the food web, such as river algae, reed canary grass, tree leaves, and asparagus. In addition, samples were collected of caddis fly larvae (next step in the food chain from algae), burrow soil excavated by mammals and ants at waste sites, and pellets cast by raptors, and coyote scat, to determine possible contamination of the upper end of the food chain. Other sampling results generated by sitewide surveillance and facility monitoring programs will also be used in the evaluation of ecological contamination. The ecological samples that have been evaluated at this time show no noticeable contamination within the 100 B/C Reactor Area, but do indicate contamination in samples from between the 100 B/C and 100 K Areas, downriver from the 100 K Area, and in the 100 N Area. Initial samples from trees near the 100 K Area showed the highest concentration up to 88 pCi/g strontium-90.

In addition, bird, mammal, and plant surveys were conducted and reported in Sackschewsky and Landeen (1992). Current contamination data has been compiled from other sources, along with ecological pathways and lists of all wildlife and plants at the site, including threatened and endangered species. This information has been published in Weiss and Mitchell (1992).

2.2.3 Cultural Resources Review

In compliance with Section 106 of the National Historic Preservation Act (NHPA), and at the request of Westinghouse Hanford Company (WHC), the Hanford Cultural Resources Laboratory (HCRL) conducted an archaeological survey during Fiscal Year 1991 of the 100 Area Reactor compounds on the DOE Hanford Site (Chatters et al. 1992). This survey was conducted as part of a comprehensive cultural resources review of the 100 Area CERCLA operable units in support of characterization activities. The work included a literature and records review and pedestrian survey of the project area following procedures established in the *Hanford Cultural Resources Management Plan* (PNL 1989).

The 100 B/C Area consists of approximately 4.4 km^2 (441 ha), of which nearly 30% (1.3 km^2 [133 ha]) was surveyed. Most of this operable unit is on the gently sloping Pleistocene terrace ranging from 133 m (436 ft) above sea level on the north edge to 153 m (502 ft) above sea level at the southern boundary. The remainder of the area is a steeply sloping bank (1:10, i.e. 10%, grade) that extends down to the Columbia River shoreline. An extensive gravel beach is exposed along the north boundary of the operable unit at low water. On the upstream end of the operable unit, the bank is less steep, broadening into a gently

sloping (1:50, i.e., 2%, grade) gravel flat, 150 m (488 ft) wide. Archeological survey efforts were concentrated along the shoreline and the undisturbed periphery around the reactor complex.

Two archaeological sites (H3-17 and 45BN446) and a single isolated artifact (45BN430) were located within the 100 B/C Area. Site H3-17 is located on the high terraces occupied by the reactor facilities and may be affected by CERCLA characterization studies. Site 45BN446 is at risk because it may be located near frontage roads or launch facilities and may be affected indirectly by CERCLA activities.

Evaluation of the significance of all sites discovered in fiscal year 1991 will be conducted in the future. The DOE is currently considering negotiating a programmatic agreement with the Washington State Historic Preservation Office, the Advisory Council for Historic Preservation, and affected Native American Tribes to aid in the mitigation of affects to significant historic properties that are within or affected by contamination from CERCLA operable units. All work and road building associated with CERCLA characterization of the 100 Areas will be reviewed by HCRL and DOE personnel and plans will be adjusted to avoid impacts to cultural resources whenever possible.

9413293.3013

2.2.4 Hanford Site Background

The natural composition of soils at the Hanford Site is presented in *Hanford Site Background: Part 1, Soil Background for Nonradioactive Analyses* (DOE-RL 1993c). The characterization effort involved the determination of the types and concentrations of nonradioactive analytes that exist naturally in soils at the Hanford Site. In addition, physical properties and factors that might affect the natural soil chemical composition, as determined by regulatory protocols, were also characterized. Background concentrations have not been agreed upon for organic analytes or most radionuclides. Therefore, detected levels of organic and radionuclide analytes are assumed to be site-related contaminants and are not compared to background.

Table 2-2 presents the 95th percentile of the log-normal distribution of the data and the 95% confidence limit of the 95th percentile of the data distribution (95% upper threshold limit [UTL]) of natural concentrations of inorganic analytes in Hanford Site soils (DOE-RL 1993c). The 95% UTL was used to define background levels for screening of inorganic constituents for the QRA. An inorganic constituent at a site is considered to be a contaminant if the reported concentration exceeds the 95% UTL.

2.3 100-BC-2 LFI FIELD AND SAMPLING ACTIVITIES

Field activities used to evaluate contamination at the 116-C-2A pluto crib included: cable-tool drilling of a borehole; field screening for evidence of volatile organic compounds (VOC), radionuclides and hexavalent chromium; soil sampling, and borehole geophysical logging. The description of work (Kytola 1993) provided detailed guidance for these field activities. Two surface soil samples were collected as part of the LFI activities to provide

data for concentrations of chemical and radiological constituents at nonwaste site areas (Figure 2-2).

Surface based reconnaissance geophysical surveys, electro-magnetic induction and ground-penetrating radar, were performed on the 118-B-1 and 118-C-1 solid waste burial grounds. These surveys were used to help locate and delineate the wastes buried within the burial grounds and to evaluate the geophysical methods' effectiveness.

The remaining investigations of the high- and low-priority sites consisted of an analysis of historical data from past sampling and analysis (Dorian and Richards 1978), process knowledge (Miller and Wahlen 1987, Stenner et al. 1988) and analogous site information.

The investigative approach taken at each high- and low-priority site, and burial ground is summarized in Table 2-3.

9413293.3014

2.3.1 Vadose Zone Borehole Drilling

One borehole, 199-B9-4, was drilled between July 14 and July 22, 1993 at the 100-BC-2 Operable Unit to determine the nature and vertical extent of contamination associated with the 116-C-2A pluto crib. The location of the borehole within the facility was chosen to represent the "worst case" contamination, located near the effluent discharge point (Figure 2-2). The borehole was advanced using cable-tool drilling methods and was sampled using split-spoon samplers. The total depth of the borehole was based on expected waste depth and modified in the field based upon field screening results for radionuclides and volatiles (DOE-RL 1993a). Drilling was completed after field screening of two consecutive samples yielded "clean" results (results below action levels [see Section 2.3.2, paragraph 5]) (Kytola 1993). The maximum drilling and sampling depth was set at 5 ft (1.5 m) below the water table (Kytola 1993). The borehole was abandoned in accordance with Environmental Instrument Investigations (EII) 6.7, Documentation of Well Drilling and Completion Operations (WHC 1988) after all sampling and geophysical logging was completed.

2.3.2 Field Screening

All samples and cuttings from the borehole were field screened for evidence of VOC and radionuclides. The screening was done to assist in the selection of sample intervals and borehole total depth. The VOC were screened using an organic vapor monitor (OVM) that was used, maintained, and calibrated consistent with EII 3.2, Calibration and Control of Monitoring Instruments, and EII 3.4, Field Screening (WHC 1988). Radionuclides were screened according to EII 3.4, Field Screening (WHC 1988). Gross gamma screening was performed by the field geologist using a Ludlum 14C detector. The final sample interval was screened for hexavalent chromium using a portable hexavalent chromium test kit according to EII 3.4, Field Screening (WHC 1988). All screening results were recorded by the field geologist in the borehole log according to EII 9.1, Geologic Logging (WHC 1988).

0021227

Prior to drilling, a nonwaste site soil sample was collected for VOC and radionuclides at the site shown on Figure 2-2. In addition, local area background levels for VOC and radionuclides were measured on freshly disturbed surface soil by holding the instruments less than one inch from the soil. Volatile organic compound levels were determined using an OVM, radionuclide screening was determined using a Ludlum 14C. These values were used for selection of soil sampling intervals during drilling.

Due to the proximity of the waste site to the C Reactor, a site radionuclide background reading was taken each day prior to drilling (Kytola 1993). All background readings were recorded by the field geologist in the borehole log according to EII 9.1, Geologic Logging (WHC 1988).

Field screening data are qualitative; they were used to assist in the selection of sample intervals and to determine the depth at which drilling and sampling was stopped. The identification of specific constituents and their concentrations are provided by analytical results from the offsite laboratories.

The action level for VOC was 5 ppm above the background reading. Due to the proximity of the C Reactor, the action level for radionuclides was the daily site background reading plus the area background reading. Hexavalent chromium screening was for information purposes only; therefore, an action level for hexavalent chromium was not established.

9413293.3015

2.3.3 Geophysical Investigations

The 199-B9-4 borehole was logged using a spectral gamma ray radiation logging system in accordance with EII 11.1, Geophysical Logging (WHC 1988). The objective of this survey was to identify the presence, type, location and activity levels of man-made, gamma ray-emitting radionuclides in the 116-C-2A pluto crib.

Surfaced based reconnaissance geophysical surveys using ground-penetrating radar (GPR) and electro-magnetic induction (EMI) techniques were performed at the 118-B-1 and 118-C-1 burial grounds. These surveys were conducted to:

- locate the primary concentrations of buried waste within the burial grounds, emphasizing metallic waste
- locate individual trenches and silos within the burial grounds
- test the geophysical methods' effectiveness for detection and mapping the metallic waste, trenches, and silos.

2.3.4 Sampling

Analytical samples were collected from the borehole in accordance with EII 5.2, Soil and Sediment Sampling (WHC 1988). The samples were collected based on the following criteria:

- Analytical sampling began when the drill cuttings were greater than or equal to the screening criteria for radionuclides (reading at nonwaste site sampling location plus site background) or for VOC (5 ppm greater than background).

- Sampling continued at 5 ft (1.5 m) intervals until two consecutive samples taken below the expected waste depth were less than the screening criteria.

2.3.5 Historical Contamination Data

A primary reference for radiological characterization of the 100-BC-2 Operable Unit sources is a sampling study of the 100 Areas performed during 1975/76 by Dorian and Richards (1978). In the 100-BC-2 Operable Unit Area, Dorian and Richards collected samples from the pluto crib system; including the pluto crib, the pluto crib sand filter, and the pluto crib pump house; the 118-B-1 burial ground, the exhaust air filter building, and the reactor exhaust stack. The samples were analyzed for radionuclides and the inventories of radionuclides for the facilities and sites were calculated. Results from Dorian and Richards (1978) were a major resource used in the development of the 100-BC-2 conceptual model and LFI data needs. It should be noted, however, that only concentrations and inventories of selected radionuclides were reported in the 1975/76 study. In particular: nickel-63, which is generally present at activities on the same order of magnitude as cobalt-60; technetium-99, detected in 100 B/C Area groundwater wells; and daughter product radionuclides of strontium-90 and cesium-137, which have approximately the same activities as the parent nuclides, were not included in summaries of total activity.

Estimates of Solid Waste Buried in 100 Area Burial Grounds (Miller and Wahlen 1987) provides an additional source of radionuclide inventories for the solid waste burial grounds in the 100-BC-2 Operable Unit. Radionuclide concentration estimates were calculated based on buried waste inventories compiled from the review of historical documents, reconstruction of operation practices and the experiences of knowledgeable individuals involved in the disposal of wastes generated during the years of reactor operations.

2.3.6 Analogous Site Investigations

Some of the source sites in the 100-BC-2 Operable Unit have similar characteristics and histories to source sites in other 100 Area Operable Units. Data gathered for LFI from these analogous sites were used to compare and augment the data gathered for the 100-BC-2 LFI. Areas which have sites analogous to those in 100-BC-2 are; 100-BC-1, 100 D/DR,

100 H, 100 F and 100 K. Table 1-2 shows the source sites in each area that are analogous to 100-BC-2 sites.

2.4 SAMPLE ANALYSIS

Samples collected for chemical analysis were analyzed for the CERCLA Contract Laboratory Program (CLP) target analyte list (TAL) constituents and radionuclides as specified in the 100-BC-2 Operable Unit work plan (DOE-RL 1993a) and certain anions. Chemical analysis was conducted using CLP (level IV) methods. For nonCLP analytes (e.g., anions, nitrate/nitrite) analyses were performed according to EPA level III methods. Radiochemistry analysis was performed according to laboratory specific procedures using standard methodologies (e.g., gas proportional counting, alpha spectroscopy, gamma spectroscopy, etc.). Routine analytical detection, quantitation limits, precision and accuracy are specified in Appendix A of the 100-BC-2 Operable Unit work plan (DOE-RL 1993a).

9413293.3017

2.5 DATA VALIDATION

Data validation was performed by a qualified independent participant contractor. All validation was performed in compliance with WHC *Sample Management Administration Manual* (WHC 1990), Section 2.1 for inorganic analyses and Sections 2.3 and 2.4 for radioactive analyses. All analytical data packages were assessed and the chemical and radionuclide data were validated. The results of the data validation process are presented in *Data Validation Report for the 100-BC-2 Vadose Investigation - 116-C-2A Pluto Crib* (WHC 1993b).

The data evaluation and validation process assigned data qualifier letter codes to individual analytical results in addition to those included from the analytical laboratory. The following qualifier letter codes are applied to data from the LFI:

- "U" indicates the analyte was analyzed for and not detected. The numerical value reported is the contract required detection limit (CRDL). Contract required detection limits apply to EPA CLP protocol analyses of inorganic constituents and to detection limits established by WHC for radionuclide analyses. Sample quantitation limits and sample detection limits may be lower or higher than the CRDL, depending on instrumentation, matrix, and concentration factors.

- "J" indicates the analyte was analyzed for and detected. The concentration reported is an estimate due to identified quality control (QC) deficiencies. For example, if the amount present is less than the CRDL, the concentration reported is considered as estimated value.

- "UJ" indicates the analyte was analyzed for and not detected. The detection or quantitation limit for the sample can only be estimated due to identified QC deficiencies.

- "E" indicates the analyte was analyzed for and detected at a concentration outside the calibration range of the instrument. The reported concentration is an estimate, possibly containing significant error.

- "R" indicates the data were rejected during validation by the independent contractor because of quality assurance problems or for administrative reasons. Most of the data from the radionuclide analyses were marked "R" during the validation process because the instrument calibration data were not included in the package from the analytical laboratory. Evaluation of the radionuclide analytical results during the LFI/QRA process indicated the data were useable, although the "R" qualifier code was retained.

- "B" for inorganic data, indicates the analyte was detected at a concentration between the instrument detection limit (IDL) and the CRDL.

9413293.3018

Results marked with "J", "R" (in all but a few instances), and "B" qualifiers were used for the LFI and QRA as were results without qualifiers. Results marked with "U" or "UJ" qualifiers were not used.

In addition to the data validation identified above, the LFI data were evaluated for use in the LFI and QRA. First, a detailed inventory of all samples collected for the LFI was developed. This information was gathered from the project sample list, borehole log, and sample tracking sheets. Multiple information sources were reviewed as no one source contained all required information.

Next, the analytical data were compiled and reviewed. This was done to verify that the validation results were incorporated into the analytical database and that all data with data quality deficiencies (e.g., technical concerns) were not used; however, data rejected for administrative reasons, (e.g., calibration data delivered late) were considered usable for the LFI and QRA. This is the only condition whereby rejected data were used in the LFI.

Last, the equipment blank data were reviewed to determine if sample data detection were due to sources other than media contamination. This review was conducted using the EPA's "five or ten times rule". The ten times rule applies to common laboratory contaminants, none of which were analyzed for in the LFI. Detected concentrations of other contaminants needed to be greater than five times their corresponding laboratory blank value to be considered valid. Contaminants with detections less than five times their corresponding equipment blank value were flagged. The decision to use or not use the value was made in the QRA.

2.6 QUALITATIVE RISK EVALUATION OVERVIEW

The following sections provide an overview of the approach used to evaluate the analytical data for the QRA. Discussions include conducting the data evaluation, exposure assessment, toxicity assessment, risk characterization, and uncertainty analysis for the high-priority waste sites and the solid waste burial grounds at the 100-BC-2 Operable Unit.

2.6.1 Data Evaluation

The purpose of this section is to provide an overview of the general source of information consulted to prepare the QRA. The contaminants of potential concern (COPC) identification process and tables of COPC at individual waste sites are included in this section. Tables 2-4 through 2-7 illustrate the COPC identification process and provide the concentrations of COPC for each waste site evaluated in the 100-BC-2 Operable Unit QRA.

The information on each waste site is reviewed to identify inorganics and/or radionuclides that might impact the key media (e.g., soil, groundwater, surface water, air, or biota). This information may be obtained from process knowledge, disposal knowledge, inventory records, historical studies data, information obtained during site reconnaissance, and data generated from LFI sampling activities.

Both the historical and LFI data are considered for identification of COPC. The contaminants are considered for both human health and ecological QRA only if they are detected in the upper 4.6 m (15 ft) of soil. This depth is used in accordance with the Washington Administrative Code (WAC) which requires the assumption that a reasonable estimate of the depth of soil that could be excavated and distributed at the ground surface as a result of site development activities (e.g., constructing a basement) is from ground surface to 4.6 m (15 ft) below ground surface (WAC 173-340-740 (6(c)). The maximum concentration of each detected contaminant from the historical or LFI data set is selected for evaluation. Contaminants below 4.6 m (15 ft) were evaluated based on their potential to impact groundwater.

The natural composition of soils at the Hanford Site has recently been characterized (DOE-RL 1993c) and is discussed above in Section 2.2.4. This background information is used in the identification of COPC at the 100-BC-2 Operable Unit as recommended in HSRAM (DOE-RL 1994a).

2.6.1.1 Identification of Contaminants of Potential Concern. The evaluation process discussed in Section C.2.1 of HSRAM (DOE-RL 1994a) is used to identify COPC for each waste site. If the maximum concentration of an inorganic analyte exceeds the 95% UTL it is considered to be a contaminant (DOE-RL 1994a) and is compared to the preliminary risk-based screening concentrations (DOE-RL 1994a). If the maximum concentration of an inorganic analyte also exceeds the preliminary risk-based screening concentration it is a COPC and is retained for human health evaluation. Detected levels of radionuclides are assumed to be site-related contaminants and are not compared to background. The risk-based screening concentrations correspond to a lifetime incremental cancer risk (ICR) of 1E-07 or to a hazard quotient (HQ) of 0.1, assuming exposure according to the frequent-use scenario.

Risk-based screening concentrations are applied to inorganic and radionuclide analytes for the human health evaluation only. For the ecological risk evaluation inorganic analytes which exceeded the 95% UTL and all detected radionuclides are considered to be COPC. Because selection of COPC for ecological evaluation does not include comparison to a risk-based screening value, contaminants might be retained in the ecological risk evaluation which have not been included in the human health evaluation.

Although gross alpha and gross beta radioactivity measurements are tabulated, these data are not used in the QRA because they are indicators of contamination and are not themselves contaminants. The risk indicated by gross alpha and gross beta measurements is addressed in the evaluation of individual radionuclides.

2.6.2 Uncertainty Associated with Data Evaluation

The uncertainty in the QRA risk characterization includes specific uncertainties related to the data evaluation process for detected contaminants. Uncertainty can also be related to the quality of data used in the QRA.

In order to categorize the uncertainty regarding data use, categories of high or medium quality are assigned to LFI and historical data. Limited field investigation data are analyzed using specific ERA methods, are validated following EPA functional guidelines, and are therefore of high quality. Historical data from the Dorian and Richards report (1978) were analyzed following routine laboratory protocols and have not been validated; therefore, the quality of this data is considered to be medium.

Some LFI data rejected during the validation process have been reconsidered to include some rejected or estimated data values in the QRA. For instance, "J" qualified (estimated) values are used and "R" qualified (rejected) values are included if the rejection is for administrative reasons rather than technical reasons.

The contaminants and concentrations identified in the LFI data are not necessarily representative of the all the soil within 4.6 m (15 ft) of the surface. The maximum COPC concentration used might be an under or over estimate of the actual concentration. Because only one borehole was drilled for sampling, the possibility also exists that contaminants may be present other than those identified.

Uncertainty associated with the historical or LFI data contributes to the overall uncertainties of human health risk estimates in this QRA. The uncertainty in the identification and quantification of contaminant soil concentrations used in the exposure assessment is defined as follows:

- "Low": analytical data were obtained from media similar to the exposure pathway medium.
- "Moderate": analytical data were not obtained from media similar to the exposure pathway medium.
- "High": site-specific analytical data were not available. Waste sites characterized by comparison with analogous waste sites are considered to have "high" contaminant identification and contaminant concentration uncertainties.

According to these definitions, the LFI and historical data used in the ingestion pathway evaluations were considered to have "low" uncertainty for the contaminants reported.

Uncertainty in data used to evaluate external radiation exposures was considered "moderate" because the evaluation used toxicity slope factors that extrapolate external radiation risks from radionuclide concentrations in soil. Direct measurements of external radiation intensity were not available for this QRA. Because exposure via the external radiation pathway is shown to be a major contributor to risk at many waste sites, this "moderate" data uncertainty is expected to significantly impact this QRA.

Uncertainty in data used to evaluate the inhalation pathway exposures was also considered "moderate". The evaluation required extrapolation of airborne dust concentrations from soil concentrations rather than directly from concentrations in airborne dust samples.

Contaminant identification uncertainty is considered to be "low" for waste sites evaluated using LFI data, for both historical and LFI data. The COPC identified have established release histories at the 100-BC-2 Operable Unit. Because the systematic and/or random errors attributed to the analytical methods used are expected to be minimal relative to exposure assumptions of HSRAM (DOE-RL 1994a), the uncertainty associated with the contaminant concentrations reported is also considered "low".

Contaminant identification uncertainty is considered to be "low" to "moderate" for waste sites evaluated using only historical data. The primary objectives of historical studies were to investigate radionuclides in exposure media added by Hanford operations. As a result, the historical data reports soil concentrations of only man-made radionuclides.

Uncertainty might result in either an over or under estimation of risk, with a "low", "moderate", or "high" magnitude of error. Uncertainties in risks estimated for 100-BC-2 Operable Unit QRA waste sites are dominated by the uncertainty of the exposure assessment. This "moderate" to "high" exposure uncertainty reflects over or under estimations of risk resulting from the use of maximum COPC concentrations in the exposure assessment. Further sampling or refinements in existing data cannot reduce uncertainties associated with the exposure assessment unless the effort changes the maximum concentration.

2.6.3 Human Health Risk Evaluation Process

The human health risk evaluation for this operable unit considers only two scenarios; frequent- and occasional-use, with three exposure pathways; soil ingestion, fugitive dust inhalation, and external radiation exposure. Because there were no organic COPC the inhalation of volatile organics exposure pathway is not evaluated. The use of these scenarios and pathways was agreed to by the 100 Area Tri-Party unit managers (December 21, 1992, and February 8, 1993). The qualitative risk estimations are grouped into "high" (lifetime ICR > 1E-02), "medium" (ICR > 1E-04 to 1E-02), "low" (ICR 1E-06 to 1E-04), and "very low" (ICR < 1E-06) risk categories. A frequent-use scenario is evaluated for the year 2018

to ascertain potential future risks associated with each waste site after additional radionuclide decay. For the current occasional-use scenario, the effect of radiation shielding by the upper 2 m (6 ft) of soil on the external exposure risk at each waste site is evaluated (WHC 1993c).

2.6.3.1 Exposure Assessment. The exposure assessment methodology is presented in Section 2.2 and Appendices A and C of HSRAM (DOE-RL 1994a). The exposure assessment is conducted according to a conceptual site model that includes the determination of exposure scenarios, exposure pathways, exposure parameters, exposure point concentrations and the quantification of exposures. The components of the exposure assessment methodology are individually discussed in the following paragraphs.

2.6.3.2 Conceptual Site Model. The conceptual model for the 100-BC-2 Operable Unit includes the hypothetical exposure pathways to human and ecological receptors at this site. Figure 2-3 displays the site model used in evaluation of this QRA as specified in the HSRAM (DOE-RL 1994a). The 100-BC-2 Operable Unit QRA conceptual site model does not include potential receptor exposures from contaminant infiltration into groundwater.

9413293.3022

2.6.3.3 Exposure Scenarios. Under current site conditions, there are no residents at the 100-BC-2 Operable Unit and institutional controls prevent inadvertent intrusion into waste sites. Exposures and associated risks presented in the QRA are not actual risks but are estimates of potential risks under frequent- or occasional-use. The frequent-use scenario was evaluated to estimate exposures to a hypothetical residential receptor living at each 100-BC-2 Operable Unit waste site. The occasional-use scenario was evaluated to approximate the infrequent exposures to hypothetical recreational users of the Columbia River and intruders on the 100-BC-2 Operable Unit waste sites.

Future frequent-and occasional-use scenarios were also evaluated, using the maximum concentrations of radionuclides that were corrected for radioactive decay to the year 2018 per agreements stated in the Tri-Party Agreement Projects Managers Meeting Minutes of March 19, 1992. The Tri-Party Agreement Project Managers agreed to present information that compares the estimated risk after implementation of remedial alternatives, including varying lengths of institutional control (e.g. in the year 2018, 30 years after the 1988 initiation of the Tri-Party Agreement).

2.6.3.4 Exposure Pathways. The pathways evaluated for each waste site and scenario in the 100-BC-2 Operable Unit QRA are:

- soil ingestion
- fugitive dust inhalation
- external radiation exposure.

No modeling of contaminant transport through the environment is used in the 100-BC-2 Operable Unit QRA as specified in HSRAM (DOE-RL 1994a).

2.6.3.5 Parameters. Exposure parameters for the scenarios evaluated in this QRA are defined in Appendix A of HSRAM (DOE-RL 1994a). Recreational exposure parameters are

used to evaluate the occasional-use scenario and residential exposure parameters are used to evaluate the frequent-use scenario.

2.6.3.6 Exposure Point Concentrations. For purposes of the QRA, the maximum soil concentration of a COPC measured within the specified depth interval (4.6 m [15 ft]) is used as the exposure point concentration. Historical radionuclide soil concentration data were corrected to the July, 1993 to allow for radionuclide decay.

Assuming that soil excavation activities do not occur in the occasional-use scenario, the radiation shielding provided by clean-fill soils covering 100-BC-2 Operable Unit waste sites can reduce external radiation exposure of human receptors. Analyses using the residual radioactive material guidelines, and software model (RESRAD) computer program (Argonne 1992) have determined that radiation emitted by radionuclides located deeper than 2 m (6 ft) would be effectively shielded by the overlying soils (WHC 1993d). Therefore, the occasional-use scenario is also evaluated using radionuclide exposure point concentrations derived from the maximum concentration detected in the upper 2 m (6 ft) of soil.

Air concentration data specific to individual waste sites were not available for use in this QRA. The COPC airborne concentrations are estimated from their respective maximum soil concentrations. Fugitive dust concentrations are estimated using a particulate emission factor (PEF) of 2E+07 m^3/kg. This PEF conservatively assumes that the fugitive dust concentrations at each waste site are constantly equivalent to the National Primary Ambient Air Quality Standard for particulate matter of 50 $\mu g/m^3$ (EPA 1993).

2.6.3.7 Quantification of Exposures. The methodology for the quantification of receptor exposures in the various scenarios is presented in HSRAM (DOE-RL 1994a). Standard EPA equations (EPA 1989, DOE-RL 1994a) are used as the basis for all intake calculations. Exposures of human receptors to chemical COPC are expressed as dose rate (e.g., mg of contaminant per kg of receptor bodyweight per day). Exposures to radionuclide COPC are expressed as total intake in pCi.

2.6.3.8 Toxicity Assessment. The general procedures for toxicity assessment are presented in HSRAM (DOE-RL 1994a). The toxicity assessment for the QRA identifies contaminant-specific systemic toxicity factors for nonradionuclide and carcinogenic toxicity factors for radionuclide analytes.

The EPA classifies all radionuclides as Group A (known human) carcinogens. Radionuclide slope factors are calculated by EPA's Office of Radiation and Indoor Air (ORIA) to assist with risk-related evaluations and decision-making at various stages of the remediation process. Ingestion and inhalation slope factors are best estimates (i.e., median or 50th percentile values) of the age-averaged, lifetime excess cancer incidence (fatal and nonfatal cancer) risk per unit of activity inhaled or ingested, expressed as risk/pCi. External exposure slope factors are best estimates of the lifetime excess cancer incidence risk for each year of exposure to external radiation from photon-emitting radionuclides distributed uniformly in a thick layer of soil, and are expressed as risk/yr per pCi/g soil (EPA 1993). Table 2-8 presents the carcinogenic toxicity factors for COPC at 100-BC-2 Operable Unit.

2.6.3.9 Risk Characterization. The risk characterization for the QRA is conducted as presented in HSRAM (DOE-RL 1994a). The QRA approach evaluates sites with quantitative sampling data and sites with limited or no sampling data. Consequently, risk characterization is discussed separately for each situation.

2.6.3.10 Risk Characterization when Quantitative Data are Available. The risk characterization methodology provides estimates of lifetime ICR for exposures to carcinogenic COPC and HQ for exposures to systemic toxicant COPC.

The total lifetime ICR and hazard index (HI) to human receptors at each site is determined by summing the individual COPC ICR and HQ contributions from all pathways. Because the risk characterization equation for carcinogens used in this QRA is only valid up to estimated risks of approximately 1E-02 (EPA 1989), lifetime ICR estimates which exceeded 1E-02 were reported as "> 1E-02".

The total lifetime ICR for each waste site is qualitatively discussed with respect to the following levels based on agreements by the signatories to the Tri-Party Agreement on May 26, 1993:

- "high" (ICR > 1E-02)
- "medium" (1E-02 < ICR < 1E-04)
- "low" (1E-04 < ICR < 1E-06)
- "very low" (ICR < 1E-06).

The major COPC and major exposure pathways contributing to total risk are discussed individually for sites at which total lifetime ICR exceed 1E-06.

2.6.3.11 Risk Characterization When Quantitative Data are not Available. Waste sites without analytical data are evaluated qualitatively. Contaminants of potential concern releases are identified from available historical information or from process knowledge of the waste site. Human health risks assessed at quantitatively characterized analogous waste sites are used to establish a range of risks which may exist at the investigated waste site.

2.6.4 Uncertainty Associated with Human Health Risk Evaluation

The human health risks calculated in this QRA are estimates that reflect several assumptions and related uncertainties. Uncertainties inherent in these estimated risks reflect a combination of uncertainties in the data used, exposure and toxicity assessments and risk characterization calculations.

9413293.3024

2.6.4.1 Exposure Assessment Uncertainties. The impact of the exposure assessment uncertainties can be grouped into the following qualitative categories (EPA 1989):

- "low": uncertainty might affect estimates by less than one order of magnitude
- "moderate": uncertainty might affect estimates by one to two orders of magnitude
- "high": uncertainty might affect estimates by more than two orders of magnitude.

The major contributions to exposure assessment uncertainties result from assumptions concerning land-use scenarios, exposure parameters, exposure pathways and soil concentrations. Institutional controls that currently prevent frequent-use and limit occasional-use scenario exposures are assumed to be removed. Because neither of these exposure scenarios currently occur, risks that might occur for humans under frequent- and occasional-use were included to provide an upper and lower bound estimate of risk to a reasonable maximum exposure individual.

Contaminants of potential concern in subsurface soil were assumed to be accessible to the hypothetical receptor by all exposure pathways. Inhalation and ingestion exposures are generally limited to COPC concentrations located near the surface. This assumption results in over estimations of receptor exposures, especially in the occasional-use scenario, and at sites known to be covered with clean fill.

The use of maximum soil concentrations of all COPC from the surface to a depth of 4.6 m (15 ft) introduces "high" uncertainty into the exposure assessment. Spatial distributions of surface and subsurface COPC concentrations are not considered. Because the maximum observed concentration is assumed everywhere in the surface and subsurface soil, the potential human exposure is over estimated, especially in the occasional-use scenario.

An assumption of "infinite source" geometry is used to evaluate individual external radiation exposures. This assumption is inherent in the EPA toxicity parameters used in this QRA (EPA 1993). Exposures calculated using this assumed geometry estimate that a hypothetical receptor would be exposed to radiation from an infinitely wide and deep soil column uniformly distributed with the maximum concentrations of all radionuclide COPC. Because this assumption ignores differences in radiation intensity provided from any other distribution of COPC in soil, "high" uncertainty is introduced. At certain sites this uncertainty causes exposures to be over estimated, and the associated "high" risks to be dominated by the external exposure pathway.

2.6.4.2 Toxicity Assessment Uncertainties. The effects of toxicity assessment uncertainties may reflect either under or over estimations of site risks. Uncertainties associated with the various toxicity parameters result from:

- using data from animal exposures to predict health effects in humans

- using dose-response information from a homogeneous animal or human population to predict potential health effects that may occur in the more heterogeneous general population

- using information on dose-response effects from high-dose exposures to predict effects at low-doses

- using short-term exposure data to estimate effects from chronic exposures, or vice versa.

The EPA addresses these uncertainties by assigning degrees of confidence to the published toxicology studies for the compounds in question. An assignment of "low" confidence indicates that a change in the toxicity parameter is expected when additional chronic data become available (EPA 1989). An assignment of "low" confidence implies "high" uncertainty in the toxicity assessment for this QRA. Similarly, a "medium" confidence implies "medium" uncertainty; and "high" confidence implies "low" uncertainty. Table 4-1 includes the toxicologic uncertainties associated with the COPC in this QRA.

2.6.4.3 Risk Characterization Uncertainties. The risk characterization process combines the results of the exposure assessment with the toxicity assessment into a measure of risks to human health at the evaluated waste site. Therefore, uncertainties inherent in the component assessments are propagated into the risk characterization. Consequently, "high" exposure assessment uncertainty imparts "high" uncertainty into the risk characterization.

2.6.4.4 Uncertainty Evaluation Summary. Use of conservative assumptions usually results in over estimation of human health risk and increased uncertainty. This approach serves a useful purpose in this QRA by providing strict criteria for identifying the contaminants and exposure pathways of concern at the 100-BC-2 Operable Unit. Although these conservative assumptions serve to simplify the risk characterization process, the resulting numerical values do not represent the most realistic estimates of risks and hazards to human health. The use of the numerical risk and hazard estimates in the 100-BC-2 Operable Unit QRA should be limited to comparisons with QRA for other Operable Unit evaluated using the same methodology (DOE-RL 1994a). Table 4-1 lists contaminant identification and exposure assessment uncertainty for the 100-BC-2 Operable Unit.

2.6.5 Ecological Risk Evaluation Process

The purpose of the qualitative ecological evaluation is to estimate the potential ecological risks to a selected ecological receptor following exposure to contaminants 100-BC-2 Operable Unit soils.

The 100-BC-2 Operable Unit is a terrestrial waste unit and does not contain surface water bodies and is not apparently subject to sheet flows from surface water runoff. The qualitative ecological evaluation approach relies mainly on professional judgement and experience regarding waste site stressors, appropriate ecological receptors and primary exposure pathways; and uses existing or limited field data. The ecological evaluation is not

Contaminants found in the 0 to 4.6 m (0 to 15 ft) interval soil samples at waste sites within the 100-BC-2 Operable Unit include only radioactive elements (only radionuclides were analyzed). All historical radionuclide concentrations were decayed to July 1993.

Radionuclides can induce ecological effects as a result of their presence in the abiotic environment (external dose rate) and by their incorporation into the body (e.g., internal dose rate from consumption of contaminated food). The total daily radiation dose rate to an organism can be estimated as the sum of doses received from all radioactive elements ingested, residing in the body, and available in the organism's environment. The radiological dose rate an organism receives is usually expressed as rad/day. Because exposure to radiation can result from both external environmental radiation and internal radiation (DOE-RL 1994a), the radiation dose from each of these pathways must be summed to determine the total dose to the organism.

2.6.5.1.3 Receptor Selection. Typically, in a quantitative risk assessment, several trophic levels and several ecological receptors within the foodweb are selected for study in order to encompass receptors of varying sensitivity, to assess different endpoints, and to evaluate contaminant transport through different pathways. For the qualitative ecological evaluation, generally only one receptor is used for limited exposure scenarios and simple endpoints. The ecological receptor used in this QRA is the Great Basin pocket mouse.

2.6.5.1.4 Endpoint Selection. Endpoints are classified as either assessment endpoints or measurement endpoints. As stated in *Framework for Ecological Risk Assessment* (EPA 1992), "Assessment endpoints are explicit expressions of the actual environmental value that is protected. Measurement endpoints are measurable responses to a stressor that are related to the valued characteristics chosen as the assessment endpoints." Only measurement endpoints are examined for the Great Basin pocket mouse. This is consistent with the objective of the qualitative ecological evaluation. The dose rate to the pocket mouse was used to screen the level of risk at an individual waste site. For radionuclides, the dose rate to a mouse is compared to 1 rad/day (IAEA 1992) (DOE Order 5400.5). Nonradiological contaminants were not analyzed in the 0 - 4.6 m (0 - 15 ft) soil depth interval in this QRA, therefore; exposures were not calculated or compared to toxicity values.

2.6.5.2 Analysis Phase. The analysis phase of the qualitative ecological evaluation is a technical evaluation of the available data used to assess the potential of exposure of Great Basin pocket mouse to the stressors at each waste site.

2.6.5.2.1 Characterization of Exposure. This section focuses on the development of the exposure relationship between receptor and site contaminants. It is assumed that the radionuclides are uniformly distributed over the site and are biologically available. Receptors are exposed to the maximum contaminant concentrations obtained from the LFI sampling efforts from historical studies.

2.6.5.2.2 Exposure Analysis. This analysis assumes that the receptor spends its entire life in the site, obtains all its food from the site when present, and all consumed food is contaminated. However, because there is no source of water within the site (nor is it a

requirement for the pocket mouse), drinking water is not considered a route of exposure. The ecological evaluation focuses on potential adverse effects on the Great Basin pocket mouse to constituents present in the 100-BC-2 Operable Unit waste sites. Terrestrial vegetation is represented as a generic plant species exposed to soil contaminants. The major route of exposure of plants to waste site COPC was assumed to be direct uptake of contaminants from soil. Plants were assumed to be the sole source of food for the mouse. Table 2-9 provides general parameters used for ecological dose equations for COPC at the 100-BC-2 Operable Unit.

The radiation dose rate is based on receptor whole-body concentrations. These stressors are assumed to be bioavailable for uptake by vegetation, which is consistent with the objectives of the QRA.

In general, for organisms whose home range is smaller than the operable unit, it is assumed that 100% of their diet consisted of contaminated foodstuffs. However, for organisms spending a fraction of their time feeding within the operable unit, a usage factor is calculated based on the proportion of their home range that the operable unit could encompass. The usage factor for the Great Basin pocket mouse by waste site is assumed to be one in this evaluation. An example calculation for radiological dose is also shown in DOE-RL (1994a).

9413293.3028

2.6.5.2.3 Characterization of Ecological Effects. Toxic responses can be induced in mice exposed to ionizing radiation. This characterization analyzes the relationship between the stressor and assessment and measurement endpoints. Because site-specific toxicity data are not available, potential adverse effects of these agents on the mouse were predicted based on toxicity data in the literature. The only regulatory standard for radionuclides in the environment is contained in DOE Order 5400.5, which adapted IAEA (1992) recommendations to limit exposure to aquatic organisms to < 1 rad/day. This recommended dose limitation was used as a default value to establish the environmental HQ for radionuclides for the mouse.

Because nonradiological data was not evaluated in this ecological QRA, chemical toxicity to the pocket mouse and intake values for a given contaminant were not compared to the no observable effect level (NOEL) (DOE 1992).

2.6.5.3 Environmental Risk Characterization. The risk characterization phase evaluates the likelihood of an adverse effect to the pocket mouse. The purpose of this section is to integrate the receptor dose or intake values for the COPC with expected biological responses and describe the significance of risk to the various ecological receptors. The risk to the Great Basin pocket mouse was estimated by calculation of an environmental hazard quotient (EHQ). The EHQ was based on a comparison between identified benchmark of 1 rad/day for radionuclides and calculated animal dose or intake. The relationship between the benchmark and estimated dose or intake was expressed as an EHQ.

$$\text{EHQ} = \frac{\text{Organism's Dose}}{1 \text{ rad/day}}$$

The EHQ ratio is used to assess potential adverse effect to an individual animal. For example, an EHQ that approaches or exceeds unity would strongly indicate a potential adverse effect to an individual.

2.6.5.4 Interpretation of Ecological Significance. The approach presented for the QRA at the 100-BC-2 Operable Unit waste sites screened the potential radiation dose to the pocket mouse. The screening, or qualitative, approach models COPC uptake from soil-to-plant to the mouse. The ecological significance of the QRA is limited because few biological field data exist to support or refute predicted impacts on individuals. In addition, without field data it is difficult to ascertain impacts at the population or community level of organization.

2.6.6 Uncertainty Associated With Ecological Risk Evaluation

The uncertainty associated with the approach used in the qualitative ecological evaluation for the 100-BC-2 Operable Unit waste sites is significant because data used as a source term was assumed to be available for uptake by site vegetation. In addition, the waste sites are primarily covered with cobble or gravel which limits the amount of vegetation available for use as an ecological foodstuff. Modeling from soil to the pocket mouse required a number of assumptions including soil-to-plant transfer factors or coefficients. A review of the literature produces a range of values. To take the conservative approach, in all cases the highest transfer factor was used. Other assumptions included estimating the time that a receptor spends feeding within the unit and that all foodstuff consumed is contaminated. The highest dose is used to assess qualitative risk, although in reality the dose is somewhere between these boundaries. With regard to radionuclides, radioactive decay was not considered after incorporation and it was assumed that all radionuclides are uniformly distributed throughout the body of the mouse. Each of these uncertainties contribute to the overall degree of uncertainty associated with the ecological evaluation.

2.7 IDENTIFICATION OF APPLICABLE OR RELEVANT AND APPROPRIATE REQUIREMENTS

Section 121(d) of CERCLA, as amended by the Superfund Amendments and Reauthorization Act of 1986 (SARA), requires that fund-financed, enforcement, and federal facility remedial actions comply with ARAR in federal environmental laws and more stringent, promulgated, state environmental or facility siting laws.

Comprehensive Environmental Response Compensation and Liability Act defines applicable requirements as those cleanup standards, standards of control, and other substantive environmental protection requirements, criteria, or limitations promulgated under federal or state law that specifically address a hazardous substance, pollutant, contaminant, remedial action, location, or other circumstance at a CERCLA site. Relevant and appropriate requirements are those cleanup standards, standards of control, and other substantive environmental protection requirements, criteria, or limitations promulgated under federal or state law that, while not "applicable" to a hazardous substance, pollutant, contaminant, remedial action, location, or other circumstance at a CERCLA site, address

problems or situation sufficiently similar to those encountered at the CERCLA site that their use is well suited to the particular site.

In addition to ARAR, CERCLA also provides for the consideration of to-be-considered (TBC) guidance, non-promulgated advisories or guidance documents issued by federal or state governments that do not have the status of potential ARAR but which may be considered in determining necessary levels of protection of health or the environment.

Applicable or relevant and appropriate requirements may be further subdivided into the following categories:

- *Chemical-specific requirements* - health- or risk-based numerical values or methodologies that, when applied to site-specific conditions, result in the establishment of numerical values. If a chemical has more than one such requirement that is ARAR, compliance should generally be with the most stringent requirement.

- *Location-specific requirements* - restrictions placed on the concentration of hazardous substances or the conduct of activities solely because they are in specific locations, such as wetlands or historic places.

- *Action-specific requirements* - technology- or activity-based requirements or limitation on actions taken with respect to hazardous wastes. These requirements are triggered by the particular remedial activities that are selected to accomplish a remedy.

Potential chemical- and location-specific ARAR are defined during the field investigation portion of the CERCLA process and refined in the FS and proposed plan. Action-specific ARAR are generally defined during the phase I and II FS and redefined in detailed analysis and the proposed plan. Potential ARAR and TBC in all categories are defined in the *100 Area Feasibility Study Phases 1 and 2* (DOE-RL 1992c). For purposes of this LFI, only the chemical- and location-specific ARAR are discussed. The ARAR are presented in Tables 2-10 through 2-15.

Chemical-specific ARAR for soils are limited to those levels for hazardous constituents prescribed in the state's Model Toxics Control Act (MTCA). Currently, MTCA has not defined levels for radionuclides. Additional soil limits are presented in Subpart S of RCRA for hazardous constituents and in DOE Order 5400.5 for radionuclides. These are considered TBC for the 100 Area operable units. Potential chemical-specific ARAR for air emissions are also identified for the 100 area; however these tend to also be based on specific actions which have a tendency to increase releases to the air. Therefore, these are more appropriately addressed in the focused FS. Potential chemical-specific ARAR are listed in Table 2-10 and 2-11: TBC are included in Table 2-12.

Potential location-specific ARAR are identified for the 100 Area because of the presence of threatened or endangered species and archaeological resources. In addition,

potential location-specific ARAR based on possible impacts to wetlands and floodplains are included. These are described in Table 2-13 and 2-14: TBC are in Table 2-15.

This discussion of potential ARAR is intended to be a refinement of ARAR presented in the work plan. Additional evaluation of potential ARAR will be done in the FS phase. Final ARAR will be determined the ROD.

There are no potential ARAR for radionuclide contaminants. Because only radionuclides were sampled and detected within the 0 to 4.6 m bls (0 to 15 ft) interval of consideration, no comparison of contaminate concentration to potential ARAR was done during the LFI/QRA evaluation process.

9413294.3031

Figure 2-1 Conceptual Hydrostratigraphic Column for the 100 B/C Area

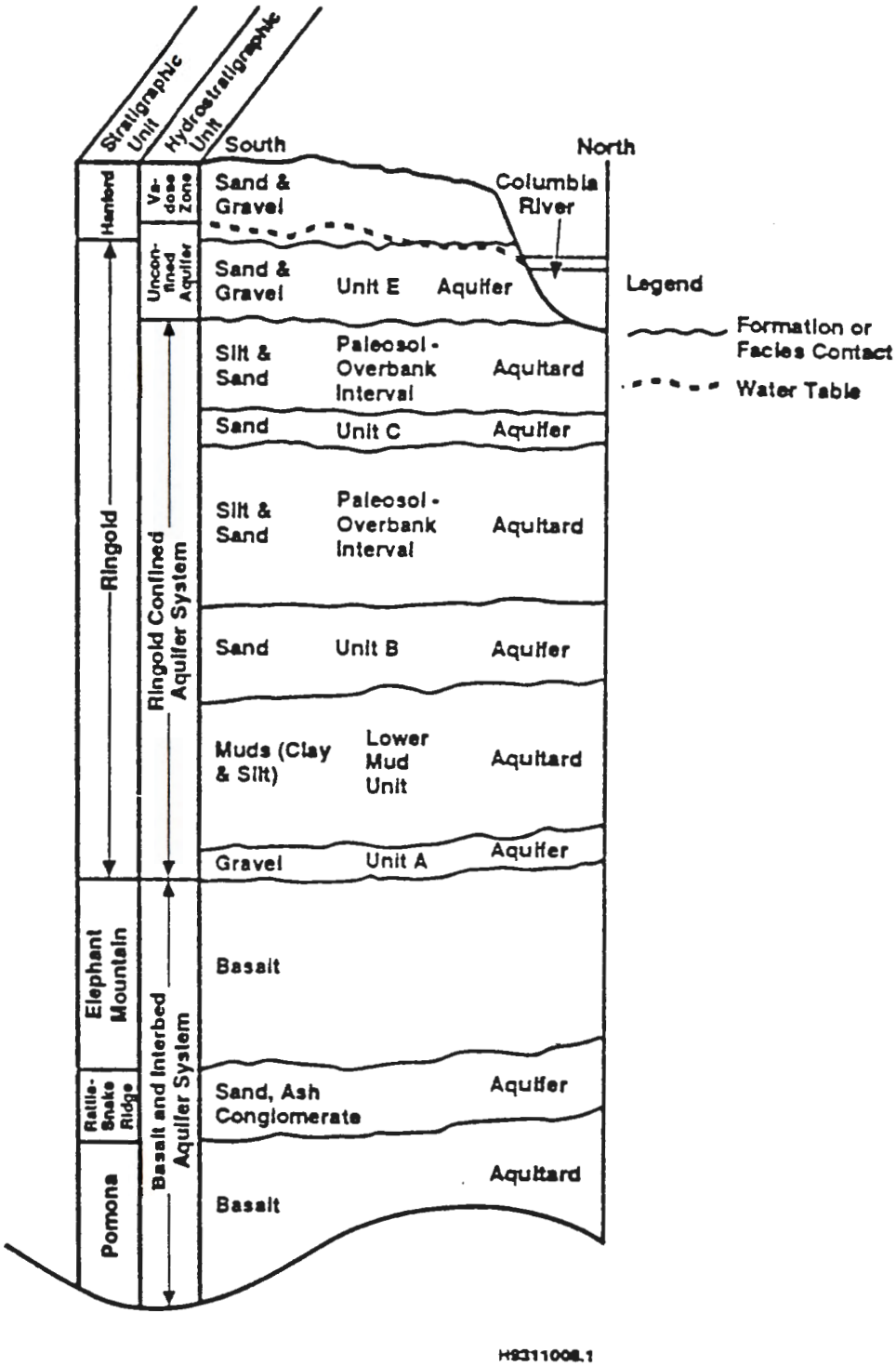

Figure 2-2 Location of the 199-B9-4 Borehole within the 116-C-2A Pluto Crib

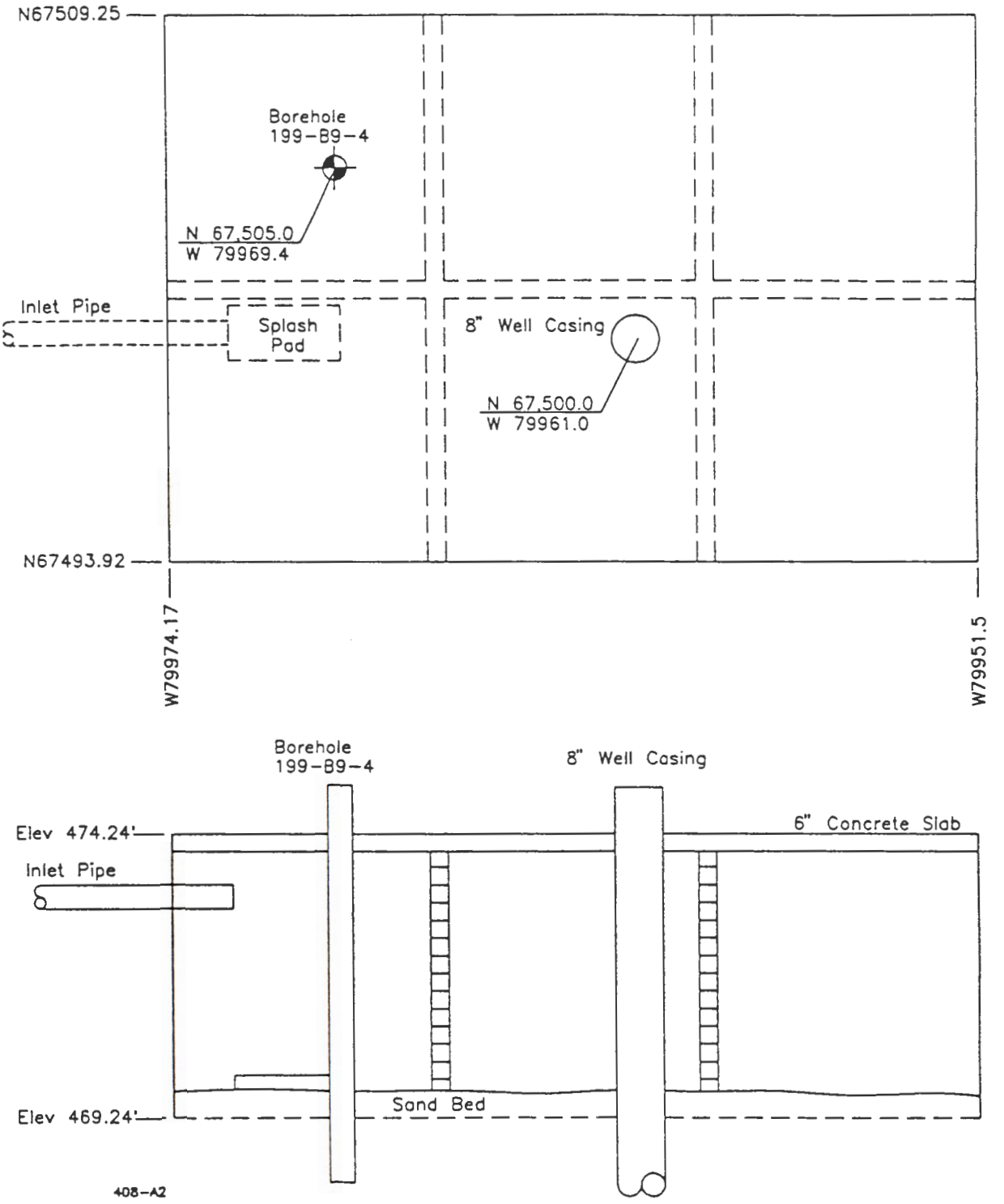

9413293.3033

9413293.3034

Figure 2-3 Conceptual Model for Exposure Pathways for 100-BC-2 Operable Unit Soils

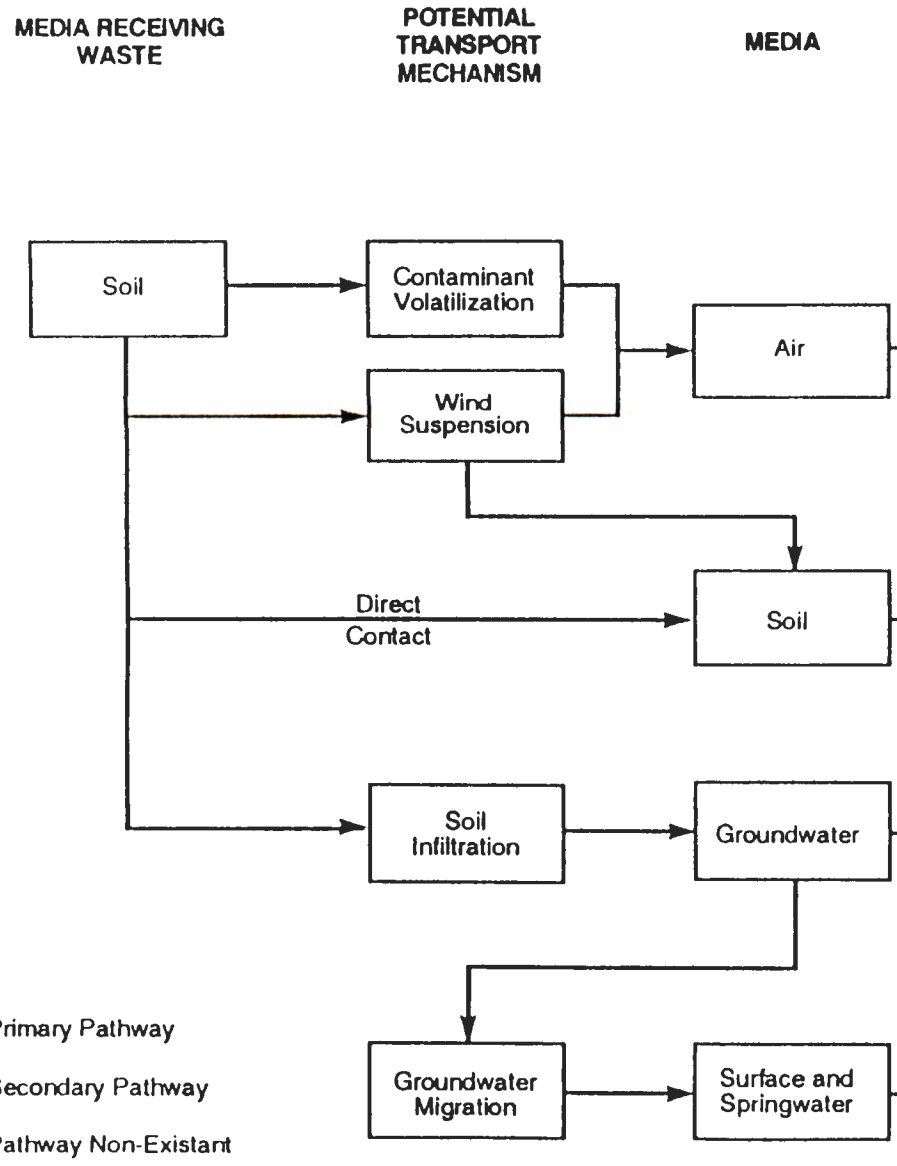

ROUTE / EXPOSURE	RECEPTOR: HUMAN, Frequent Use	HUMAN, Occasional Use	HUMAN, Occupational Worker	ECOLOGICAL, Terrestrial
Air: Inhalation	P	P	P	
Air: Dermal	S	S	S	
Air: External Radiation	S	S	S	
Soil: Ingestion	P	P	P	
Soil: Dermal	P	P	P	
Soil: External Radiation	P	P	P	
Groundwater: Ingestion	—	—	—	
Groundwater: Inhalation	—	—	—	
Groundwater: Dermal	—	—	—	
Groundwater: External Radiation	—	—	—	
Surface and Springwater: Ingestion	P	P	P	
Surface and Springwater: Inhalation	S	S	S	
Surface and Springwater: Dermal	S	S	S	
Surface and Springwater: External Radiation	S	S	S	

P Primary Pathway

S Secondary Pathway

– Pathway Non-Existant

Figure 2-4 Conceptual Model of Terrestrial Foodweb Relationships

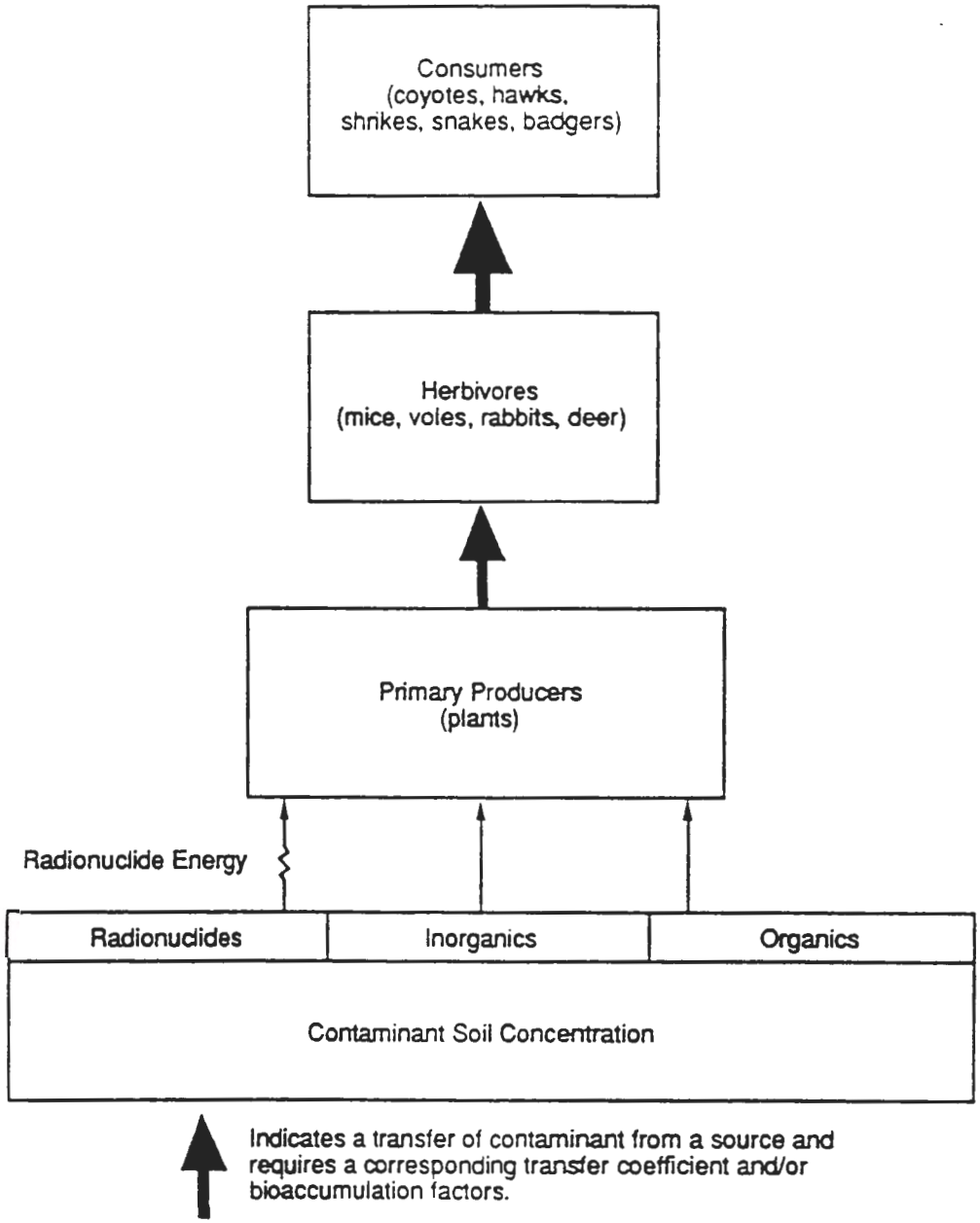

Table 2-1 100-BC-2 Operable Unit Characterization Activities (Page 1 of 2)

TASK	TITLE	WHERE ADDRESSED
1	PROJECT MANAGEMENT	Accomplished throughout project
2	SOURCE INVESTIGATION	
2a	Source Data Compilation and Review	Background information is incorporated into the work plan, QRA and LFI reports as appropriate.
2b	Geodetic Control	Coordinates and locations of sampling sites are documented in the LFI report (Chapter 3).
2c	Field Activities	Source sampling results for the 116-C-2A Pluto Crib are in the LFI report.
2d	Laboratory Analysis and Data Validation	Analytical results and data validation are documented in data validation reports referenced in Chapter 2 of LFI report
2e	Source Data Evaluation	The data was evaluated for use in the QRA and also evaluated in the LFI report.
3	GEOLOGIC INVESTIGATION	Coordinated through the 100-BC-5 operable unit tasks.
4	SURFACE WATER AND SEDIMENTS INVESTIGATION	No surface water and associated sediments are included within the boundaries of the 100-BC-2 Operable Unit.
5	VADOSE ZONE INVESTIGATION	
5a	Data Compilation	See subtask 2a
5b	Borehole Soil Sampling and Logging	Results of the borehole investigations are presented in the LFI report (Chapter 3). Borehole logs are displayed in the figures in LFI report (Chapter 3).
5c	Soil Sample Analysis	The analysis and validation are documented in the data validation reports referenced in LFI report (Chapter 2).
5d	Geophysical Logging	The results of the geophysical logging are reported in the LFI report (Chapter 3, and Appendix A).
5e	Data Evaluation	The data was evaluated for use in the QRA and also evaluated in the LFI report.

Table 2-1 100-BC-2 Operable Unit Characterization Activities (Page 2 of 2)

TASK	TITLE	WHERE ADDRESSED
6	GROUNDWATER INVESTIGATION	Performed as part of the 100-BC-5 operable unit activities.
7	AIR INVESTIGATION	Routine health and safety monitoring was performed during the field activities.
8	ECOLOGICAL INVESTIGATION	A discussion of the ecological investigation is included in the LFI report (Section 2.2.2).
9	OTHER TASKS	
9a	Cultural Resource Investigation	A discussion of the cultural resource investigation is included in the LFI report (Section 2.2.3).
10	DATA EVALUATION	Evaluation and interpretation of the data is accomplished in the QRA and LFI reports. The evaluation of the data for other purposes such as Large Scale Remediation, FS activities and treatability testing is ongoing.
11	RISK ASSESSMENT	The data generated during the LFI was used in the QRA and will be used in the baseline risk assessment in the future.
11a	Human Health Evaluation	QRA and summarized in LFI report (Chapter 4)
11b	Ecological Evaluation	QRA and summarized in LFI report (Chapter 4)
12	VERIFICATION OF CONTAMINANT- AND LOCATION-SPECIFIC ARAR.	ARAR will be addressed in the FS report and FFS report. ARAR also discussed in LFI report (Section 2.7).
13	LFI REPORT	Subject of this report.

ARAR - applicable or relevant and appropriate requirements
FS - feasibility study
FFS - focused feasibility study
LFI - limited field investigation
QRA - qualitative risk assessment

9413293.3037

Table 2-2 Summary Statistics and Upper Threshold Limits for Inorganic Analytes

Analyte	95% Distribution[a] (mg/kg)	95% UTL[b] (mg/kg)
Aluminum	13,800	15,600
Antimony	NR	15.7[c]
Arsenic	7.59	8.92
Barium	153	171
Beryllium	1.62	1.77
Cadmium	NR	0.66[c]
Calcium	20,410	23,920
Chromium	23.4	27.9
Cobalt	17.9	19.6
Copper	25.3	28.2
Iron	36,000	39,160
Lead	12.46	14.75
Magnesium	7,970	8,760
Manganese	562	612
Mercury	0.614	1.25
Nickel	22.4	25.3
Potassium	2,660	3,120
Selenium	NR	5[c]
Silver	1.4	2.7
Sodium	963	1,290
Thallium	NR	3.7[c]
Vanadium	98.2	111
Zinc	73.3	79
Molybdenum	NR	1.4[c]
Titanium	3,020	3,570
Zirconium	47.3	57.3
Lithium	35	37.1
Ammonia	15.3	28.2
Alkalinity	13,400	23,300
Silicon	108	192
Fluoride	6.4	12
Chloride	303	763
Nitrite	NR	21[c]
Nitrate	96.4	199
Ortho-phosphate	3.7	16
Sulfate	580	1,320

Source: *Hanford Site Background: Part 1, Soil Background for Nonradioactive Analytes*, DOE/RL-92-24, Rev. 1, Draft, U.S. Department of Energy, Richland, Washington.
NR = Not Reported
[a] 95th percentile of the data for a lognormal distribution
[b] 95% confidence limit of the 95th percentile of the data distribution
[c] Limit of detection
UTL: upper threshold limit

Table 2-3 LFI Activities for 100-BC-2 Operable Investigated Waste Sites

Site	Name - Size	Comments	LFI Approach
116-C-2A	Pluto Crib 7 x 4.9 x 1.5 m deep	Received cooling water from process tubes affected by fuel cladding failures and effluents from the C Reactor building	B, C, G, F, H
116-C-2B	Pluto Crib Pump Station 3 x 2.4 x 9.1 m	Pumped liquid wastes from the C Reactor building to the sand filter and pluto crib	N, H
116-C-2C	Pluto Crib Sand Filter 11.5 x 5.5 x 5.5 m	Received cooling water from process tubes affected by fuel cladding failures and effluents from the C Reactor building	N, H
118-B-1	Solid Waste Burial Ground 305 x 98 x 6.1 m deep	Contains solid reactor wastes from 100 B and 100 N Areas	R, N, H
118-C-1	Solid Waste Burial Ground 155.4 x 122 x 4.6 m deep	Contains solid wastes from 105-C Reactor building	R, N, H

B: Vadose zone borehole - drilling, geologic logging, and sampling
C: Inorganic chemical and radionuclide analysis
G: Borehole spectral gamma ray geophysical log
F: Field screening for radioactivity, volatile organic compounds and hexavalent chromium
R: Ground penetrating radar and Electro magnetic induction surveys
N: No intrusive investigations
H: Historical data review
LFI: limited field investigation

9413293.3039

Table 2-4 Contaminants of Potential Concern Screening Process: 116-C-2A Pluto Crib LFI Data (Page 1 of 2)

Detected Inorganic Analyte	Maximum Soil concentration 0'-6' (mg/kg)	Maximum Soil Concentration 6'-15' (mg/kg)	Maximum Soil Concentration 23'-57'(mg/kg)	Hanford Soil Background Concentration (mg/kg)	Human Health Risk-Based Screening concentration(a) (mg/kg)	Analyte Status for Human Health Risk Evaluation (b)	Analyte Status for Ecological Risk Evaluation
Aluminum	(c)	(c)	6130 J	15600	(d)	Removed (d)	Removed (d)
Arsenic	(c)	(c)	2.4	8.92	(d)	Removed (d)	Removed (d)
Barium	(c)	(c)	76.1	171	(d)	Removed (d)	Removed (d)
Beryllium	(c)	(c)	0.31 B	1.77	(d)	Removed (d)	Removed (d)
Cadmium	(c)	(c)	2.2	0.66 (e)	(d)	Removed (d)	Removed (d)
Calcium	(c)	(c)	9400 J	23920	(d)	Removed (d)	Removed (d)
Chromium	(c)	(c)	235	27.9	(d)	Removed (d)	Removed (d)
Cobalt	(c)	(c)	14.2	19.6	(d)	Removed (d)	Removed (d)
Iron	(c)	(c)	27900	39160	(d)	Removed (d)	Removed (d)
Lead	(c)	(c)	4.0	14.75	(d)	Removed (d)	Removed (d)
Magnesium	(c)	(c)	4780	8760	(d)	Removed (d)	Removed (d)
Manganese	(c)	(c)	361	612	(d)	Removed (d)	Removed (d)
Mercury	(c)	(c)	0.05 B	1.25	(d)	Removed (d)	Removed (d)
Nickel	(c)	(c)	17	25.3	(d)	Removed (d)	Removed (d)
Potassium	(c)	(c)	989	3120	(d)	Removed (d)	Removed (d)
Silver	(c)	(c)	1.1 B	2.7	(d)	Removed (d)	Removed (d)
Vanadium	(c)	(c)	63.3	111	(d)	Removed (d)	Removed (d)
Zinc	(c)	(c)	188 J	79	(d)	Removed (d)	Removed (d)
Detected Radionuclide Analyte	**1/2 Life (Years)**	**Maximum Soil Concentration 0'-6' (pCi/g)**	**Maximum Soil Concentration 6'-15' (pCi/g)**	**Maximum Soil Concentration 23'-57' (pCi/g)**	**Hanford Soil Background Concentration (pCi/g)**	**Human Health Risk-Based Screening Concentration(a) (pCi/g)**	**Analyte Status for Human Health Risk Evaluation(b)**
Gross Alpha		(c)	(c)	23 R(g)	NE	(d)	Removed (d)
Gross Beta		(c)	(c)	850 R(g)	NE	(d)	Removed (d)
Americium-241	432.2	(c)	(c)	0.91 R(g),J(g)	NE	(d)	Removed (d)
Carbon-14	5730.0	(c)	(c)	63 R(g),J(g)	NE	(d)	Removed (d)
Cobalt-60	5.3	(c)	(c)	210 R(g)	NE	(d)	Removed (d)
Europium-152	13.6	(c)	(c)	690 R(g)	NE	(d)	Removed (d)
Europium-154	8.8	(c)	(c)	73 R(g)	NE	(d)	Removed (d)
Europium-155	5.0	(c)	(c)	4.9 R(g)	NE	(d)	Removed (d)
Nickel-63	100.1	(c)	(c)	5500 R(g),J(g)	NE	(d)	Removed (d)
Potassium-40	1.3E+09	(c)	(c)	23 R(g)	NE	(d)	Removed (d)
Plutonium-239/240	24000	(c)	(c)	0.074 R(g),J(g)	NE	(d)	Removed (d)
Radium-226	1600.0	(c)	(c)	0.36 R(g)	NE	(d)	Removed (d)

Table 2-9 General Parameters[d] Used for Ecological Dose (Radionuclide) Equations[a]

Contaminant	Biological halflife (days)	Physical halflife (days)	Mev (absorbed energy for 2-cm diameter sphere)	Soil-to-Plant Transfer Factor	Fraction Uptake
Radionuclides					
Cesium-137	7.5(f)	1.10E+04(b)	0.267(a)(c)	0.62(h)	1(m)
Cobalt-60	9.5(a)	1.92E+03(b)	0.237(a)	0.5(g)	0.3(m)
Europium-152	635(a)	4.96E+03(b)	0.12(p)	0.001(g)	0.001(m)
Europium-154	635(a)	3.21E+03(b)	0.311(a)	0.001(g)	0.001(m)
Europium-155	635(a)	1.81E+03(b)	0.061(a)	0.001(g)	0.001(m)
Plutonium-238	65000(a)	3.20E+04(b)	5.51(a)	0.07(g)	0.001(m)
Plutonium-239	65000(a)	8.78E+06(b)	5.15(a)	0.07(g)	0.001(m)
Plutonium-240	65000(a)	8.78E+06(b)	5.15(a)	0.07(g)	0.001(m)
Strontium-90	244(o)	1.06E+04(b)	1.14(a)(c)	19(j)	0.3(m)
tritium (H-3)	10(a)	4482(b)	0.0058(a)	4.8(i)	1(m)

(a) Baker and Soldat (1992)
(b) Shleien (1992)
(c) includes the decay products in the energy absorbed.
(d) Parameter are continually revised with new information and are subject to change.
(f) value for Cesium calculated as $Y = 3.5\ (\text{mass})^{0.24}$ (Digregorio et al. 1978)
(g) Coughtrey et al. (1985)
(h) Miller et al. (1977)
(i) Whicker and Schultz (1982)
(j) Rouston and Cataldo (1978)
(k) Cataldo and Wildung (1978)
(m) ICRP (1959) for standard man
(n) assumptions used in ecological dose equations:
assumes mouse consumption of 6.7 grams/day vegetation by using $0.157 \times \text{Mass(kg)}^{0.84}$ (Calder 1984)
assumes mouse weight of 23.5 grams (Burt and Grossenheider 1976)
assumes dry-to-wet plant conversion of 0.32 (FEMP-SWCR-6 FINAL 1993)
(o) Reichle et al. (1970)
(p) update to database from Baker and Soldat (1992)

Table 2-10 Potential Federal Chemical-Specific Applicable or Relevant and Appropriate Requirements for the 100-BC-2 Operable Unit (Page 1 of 3)

Description	Citation	A/ R&A*	Requirements	Remarks
Atomic Energy Act of 1954, as amended	42 U.S.C. 2011 et seq.		Authorizes DOE to set standards and restrictions governing facilities used for research, development, and utilization of atomic energy.	
Radiation Protection Standards	40 CFR Part 191		Establishes standards for management and disposal of high-level and transuranic waste and spent nuclear fuel.	
Standards for Management and Storage	40 CFR §191.03	A	Requires that management and storage of spent nuclear fuel or high-level or transuranic radioactive wastes at all facilities for the disposal of such fuel or waste that are operated by the DOE and that are not regulated by the Commission or Agreement States shall be conducted in such a manner as to provide reasonable assurance that the combined annual dose equivalent to any member of the public in the general environment resulting from discharges of radioactive material and direct radiation from such management and storage shall not exceed 25 millirems to the whole body and 75 millirems to any critical organ.	Applicable to wastes disposed of after November 18, 1985.
Nuclear Regulatory Commission Standards for Protection Against Radiation	10 CFR Part 20			
Radiation Dose Standards	10 CFR §§20.101-20.105	R&A	Sets specific radiation doses, levels, and concentrations for restricted and unrestricted areas.	May be relevant and appropriate, as radioactive materials in the 100 Area can contribute radiation doses, levels, and concentrations which could exceed the limits; however, Hanford is not an NRC-licensed facility.

Table 2-10 Potential Federal Chemical-Specific Applicable or Relevant and Appropriate Requirements for the 100-BC-2 Operable Unit (Page 2 of 3)

Description	Citation	A/ R&A*	Requirements	Remarks
Safe Drinking Water Act	42 U.S.C. 300f et seq.		Creates a comprehensive national framework to ensure the quality and safety of drinking water.	
National Primary Drinking Water Regulations	40 CFR Part 141	R&A	Establishes maximum contaminant levels (MCL) and maximum contaminant level goals (MCLG) for organic, inorganic, and radioactive constituents. The MCL for combined radium-226 and radium-228 is 5 pCi/L. The MCL for gross alpha particle activity (including radium-226 but excluding radon and uranium) is 15 pCi/L. The average annual concentration of beta particle and photon radioactivity from manmade radionuclides in drinking water shall not produce an annual dose equivalent to total body or any internal organ in excess of 4 millirem/year.	Applicable to public water systems. Potential chemicals and radionuclides of concern may migrate to the drinking water supply as a result of remedial activities. Although federal MCLG are not enforceable standards, they are potential ARAR under the Washington State Model Toxics Control Act when more stringent than other standards. See state ARAR.
National Secondary Drinking Water Regulations	40 CFR Part 143	R&A	Controls contaminants in drinking water that primarily affect the aesthetic qualities relating to the public acceptance of drinking water.	Although federal secondary drinking water standards are not enforceable, they are potential ARAR under the Washington State Model Toxics Control Act when more stringent than other standards. See state ARAR.
Solid Waste Disposal Act, as amended by the Resource Conservation and Recovery Act (RCRA)	42 U.S.C. 6901 et seq.		Establishes the basic framework for federal regulation of solid and hazardous waste.	
Groundwater Protection Standards	40 CFR §264.92 [WAC 173-303-645][1]	A	A facility shall not contaminate the uppermost aquifer underlying the waste management area beyond the point of compliance, which is a vertical surface located at the hydraulically downgradient limit of the waste management area that extends down into the uppermost aquifer underlying the regulated area. The concentration of certain chemicals shall not exceed background levels, certain specified maximum concentrations, or alternate concentration limits, whichever is higher.	Groundwater concentration limits in this section do not exceed 40 CFR 141, except for chromium which has a limit of 50 μg/L.

[a]These are State of Washington regulatory citations which are equivalent to Title 40 Code of Federal Regulations, Parts 264 and 268 as stated in Washington Administrative Code 173-303.

Table 2-10 Potential Federal Chemical-Specific Applicable or Relevant and Appropriate Requirements for the 100-BC-2 Operable Unit (Page 3 of 3)

Description	Citation	A/ R&A*	Requirements	Remarks
Uranium Mill Tailings Radiation Control Act of 1978	Public Law 95-604, as amended			
Standards for Uranium and Thorium Mill Tailings	40 CFR 192		Establishes standards for control, cleanup, and management of radioactive materials from inactive uranium processing sites.	
Land Cleanup Standards	40 CFR §§192.10 - 192.12	R&A	Requires remedial actions to provide reasonable assurance that, as a result of residual radioactive materials from any designated processing site, the concentration of radium-226 in land averaged over any area of 100 square meters shall not exceed the background level by more than 5 pCi/g, averaged over the first 15 cm of soil below the surface, and 15 pCi/g, averaged over 15-cm-thick layers of soil more than 15 cm below the surface. In any habitable building, a reasonable effort shall be made during remediation to achieve an annual average (or equivalent) radon decay product concentration (including background) not to exceed 0.02 Working Level (WL). In any case, the radon decay product concentration (including background) shall not exceed 0.03 WL and the level of gamma radiation shall not exceed the background level by more than 20 microroentegens per hour.	May be relevant and appropriate, as any radium-226 encountered during remediation did not result from uranium processing.
Implementation	40 CFR §§192.20 - 192.23	R&A	Requires that when radionuclides other than radium-226 and its decay products are present in sufficient quantity and concentration to constitute a significant radiation hazard from residual radioactive materials, remedial action shall reduce other residual radioactivity to levels as low as reasonably achievable (ALARA).	May be relevant and appropriate, as any radium-226 encountered during remediation did not result from uranium processing.

A = applicable
R&A = relevant and appropriate
DOE: U.S. Department of Energy
CFR: Code of Federal Regulations
NRC: Nuclear Regulatory Commission
ARAR: applicable or relevant and appropriate

Table 2-11 Potential State Chemical-Specific Applicable or Relevant and Appropriate Requirements of the 100-BC-2 Operable Unit (Page 1 of 3)

Description	Citation	A/ R&A*	Requirements	Remarks
Model Toxics Control Act (MTCA)	70.105D RCW		Requires remedial actions to attain a degree of cleanup protective of human health and the environment.	
Cleanup Regulations	WAC 173-340		Establishes cleanup levels and prescribes methods to calculate cleanup levels for soils, groundwater, surface water, and air.	
Groundwater Cleanup Standards	WAC 173-340-720	A	Requires that where the groundwater is a potential source of drinking water, cleanup levels under Method B must be at least as stringent as concentrations established under applicable state and federal laws, including the following: (A) Maximum contaminant levels established under the Safe Drinking Water Act and published in 40 CFR 141, as amended; (B) Maximum contaminant level goals for noncarcinogens established under the Safe Drinking Water Act and published in 40 CFR 141, as amended; (nnC) Secondary maximum contaminant levels established under the Safe Drinking Water Act and published in 40 CFR 143, as amended; and (D) Maximum contaminant levels established by the state board of health and published in Chapter 248-54 WAC, as amended.	Federal maximum contaminant level goals for drinking water (40 CFR Part 141) and federal secondary drinking water regulation standards (40 CFR Part 143) are potential ARAR under MTCA when they are more stringent than other standards. Method B cleanup levels are levels applicable to remediation at Hanford unless a demonstration can be made that method C (alternate cleanup levels) is valid.

Table 2-11 Potential State Chemical-Specific Applicable or Relevant and Appropriate Requirements of the 100-BC-2 Operable Unit (Page 2 of 3)

Description	Citation	A/ R&A*	Requirements	Remarks
Soil Cleanup Standards	WAC 173-340-740	A	MTCA Method B concentration limits in milligrams per kilogram for potential contaminants in soils, sediments, and sludges are: Barium 5,600 Cadmium 40 Chromium (III) 80,000 Chromium (VI) 400 Copper 2,960 Manganese 400 Mercury 24 Silver 240 Zinc 24,000 Acetone 8,000 Benzene 34.5 Carbon disulfide 8,000 Methyl ethyl ketone 48,000 Methyl isobutyl ketone 4,000 Methylene chloride 133 Toluene 16,000 Anthracene 24,000 Benzo(nna)anthracene 0.137 Benzo(b)fluoranthene 0.137 Benzo(k)fluoranthene 0.137 Benzoic acid 320,000 Benzyl alcohol 24,000 Bis(2-ethylhexyl)phthalate 71.4 Chrysene 0.137 Di-n-butylphthalate 8,000 Diethyl phthalate 64,000 Fluoranthene 3,200 N-nitrosodiphenylamine 204 Pentachlorophenol 8.33 Pyrene 2400	

Table 2-11 Potential State Chemical-Specific Applicable or Relevant and Appropriate Requirements of the 100-BC-2 Operable Unit (Page 3 of 3)

Description	Citation	A/ R&A*	Requirements	Remarks
Washington State Department of Health	RCW 43.70			
Radiation Protection -- Air Emissions	WAC 246-247		Establishes procedures for monitoring, control, and reporting of airborne radionuclide emissions.	
New and Modified Sources	WAC 246-247-070	A	Requires the use of best available radionuclide control technology (BARCT),	
Radiation Protection Standards	WAC 246-221		Establishes standards for protection against radiation hazards.	
Radiation dose to individuals in restricted areas	WAC 246-221-010	A	Specifies dose limits to individuals in restricted areas for hands and wrists, ankles and feet of 18.75 rem/quarter and for skin of 7.5 rem/quarter.	

A = applicable
R&A = relevant and appropriate
CFR: Code of Federal Regulations
RCW: Revised Code of Washington
ARAR: Applicable or relevant and appropriate
WAC: Washington Administrative Code

Table 2-12 Potential Chemical-Specific To-Be-Considered Guidance for the 100-BC-2 Operable Unit (Page 1 of 2)

Description	Citation	Requirements	Remarks
Model Toxics Control Act	70.105D RCW		
Cleanup Regulations	WAC 173-340	The State Department of Ecology is currently adapting the calculations in MTCA to be applicable to radioactive contaminants. These cleanup standards may become available prior to or during remediation.	
Solid Waste Disposal Act, as amended by RCRA	42 U.S.C. 6901 et seq.		
Criteria for Classification of Solid Waste Disposal Facilities and Practices	40 CFR §257.3-4	A facility or practice shall not contaminate an underground drinking water source beyond the solid waste boundary.	The courts or the state may establish alternate boundaries.
Corrective Action for Solid Waste Management Units	40 CFR 264 Subpart S, proposed	Establishes requirements for investigation and corrective action for releases of hazardous waste from solid waste management units.	
U.S. Department of Energy Orders			
Radiation Protection of the Public and the Environment	DOE 5400.5	Establishes radiation protection standards for the public and environment.	
Radiation Dose Limit (All Pathways)	DOE 5400.5, Chapter II, Section 1a	The exposure of the public to radiation sources as a consequence of all routine DOE activities shall not cause, in a year, an effective dose equivalent greater than 100 mrem from all exposure pathways, except under specified circumstances.	Pertinent if remedial activities are "routine DOE activities."
Radiation Dose Limit (Drinking Water Pathway)	DOE 5400.5, Chapter II, Section 1d	Provides a level of protection for persons consuming water from a public drinking water supply operated by DOE so that persons consuming water from the supply shall not receive an effective dose equivalent greater than 4 mrem per year. Combined radium-226 and radium-228 shall not exceed 5 x 10^{-9} μCi/mL and gross alpha activity (including radium-226 but excluding radon and uranium) shall not exceed 1.5 x 10^{-8} μCi/mL.	Pertinent if radionuclides may be released during remediation.

Table 2-12 Potential Chemical-Specific To-Be-Considered Guidance for the 100-BC-2 Operable Unit (Page 2 of 2)

Description	Citation	Requirements	Remarks
Residual Radionuclides in Soil	DOE 5400.5 Chapter IV, Section 4a	Generic guidelines for radium-226 and radium-228 are: • 5 pCi/g averaged over the first 15 cm of soil below the surface; and • 15 pCi/g averaged over 15-cm-thick layers of soil more than 15 cm below the surface. Guidelines for residual concentrations of other radionuclides must be derived from the basic dose limits by means of an environmental pathway analysis using specific property data where available. Procedures for these deviations are given in "A Manual for Implementing Residual Radioactive Material Guidelines" (DOE/CH-8901). Procedures for determination of "hot spots," "hot-spot cleanup limits," and residual concentration guidelines for mixtures are in DOE/CH-8901. Residual radioactive materials above the guidelines must be controlled to the required levels in 5400.5, Chapter II and Chapter IV.	Residual concentrations of radioactive material in soil are defined as those in excess of background concentrations averaged over an area of 100 m^2.

RCRA: Resource Conservation and Recovery Act
CFR: Code of Federal Regulations
RCW: Revised Code of Washington
DOE: U.S. Department of Energy
MTCA: Model Toxics Control Act
WAC: Washington Administrative Code

Table 2-13 Potential Federal Location-Specific Applicable or Relevant and Appropriate Requirements for the 100-BC-2 Operable Unit

Description	Citation	A/ R&A*	Requirements	Remarks
Archaeological and Historical Preservation Act of 1974	16 U.S.C. 469	A	Requires action to recover and preserve artifacts in areas where activity may cause irreparable harm, loss, or destruction of significant artifacts.	Applicable when remedial action threatens significant scientific, prehistorical, historical, or archaeological data.
Endangered Species Act of 1973	16 U.S.C. 1531 et seq.		Prohibits federal agencies from jeopardizing threatened or endangered species or adversely modifying habitats essential to their survival.	
Fish and Wildlife Services List of Endangered and Threatened Wildlife and Plants	50 CFR Parts 17, 222, 225, 226, 227, 402, 424	A	Requires identification of activities that may affect listed species. Actions must not threaten the continued existence of a listed species or destroy critical habitat.	Requires consultation with the Fish and Wildlife Service to determine if threatened or endangered species could be impacted by activity.
Historic Sites, Buildings, and Antiquities Act	16 U.S.C. 461	A	Establishes requirements for preservation of historic sites, buildings, or objects of national significance. Undesirable impacts to such resources must be mitigated.	
National Historic Preservation Act of 1966, as amended.	16 U.S.C. 470 et seq.	A	Prohibits impacts on cultural resources. Where impacts are unavoidable, requires impact mitigation through design and data recovery.	Applicable to properties listed in the National Register of Historic Places, or eligible for such listing.
Wild and Scenic Rivers Act	16 U.S.C 1271	A	Prohibits federal agencies from recommending authorization of any water resource project that would have a direct and adverse effect on the values for which a river was designated as a wild and scenic river or included as a study area.	The Hanford Reach of the Columbia River is under study for inclusion as a wild and scenic river.

A = applicable
R&A = relevant and appropriate
CFR: Code of Federal Regulations
USC: United States Code

Table 2-14 Potential State Location-Specific Applicable or Relevant and Appropriate Requirements for the 100-BC-2 Operable Unit

Description	Citation	A/ R&A*	Requirements	Remarks
Habitat Buffer Zone for Bald Eagle Rules	RCW 77.12.655			
Bald Eagle Protection Rules	WAC 232-12-292	A	Prescribes action to protect bald eagle habitat, such as nesting or roost sites, through the development of a site management plan.	Applicable if the areas of remedial activities includes bald eagle habitat.
Regulating the Taking or Possessing of Game	RCW 77.12.040			
Endangered, Threatened, or Sensitive Wildlife Species Classification	WAC 232-12-297	A	Prescribes action to protect wildlife classified as endangered, threatened, or sensitive, through development of a site management plan.	Applicable if wildlife classified as endangered, threatened, or sensitive are present in areas impacted by remedial activities.

RCW: Revised Code of Washington
WAC: Washington Administrative Code
*NOTE: A = Applicable, R&A = Relevant and Appropriate

Table 2-15 Potential Location-Specific To-Be-Considered Guidance for the 100-BC-2 LFI

Description	Citation	Requirements	Remarks
Floodplains/Wetlands Environmental Review	10 CFR Part 1022	Requires federal agencies to avoid, to the extent possible, adverse effects associated with the development of a floodplain or the destruction or loss of wetlands.	Pertinent if remedial activities take place in a floodplain or wetlands.
Protection and Enhancement of the Cultural Environment	Executive Order 11593	Provides direction to federal agencies to preserve, restore, and maintain cultural resources.	Pertains to sites, structures, and objects of historical, archeological, or architectural significance.
Hanford Reach Study Act	PL 100-605	Provides for a comprehensive river conservation study. Prohibits the construction of any dam, channel, or navigation project by a federal agency for 8 years after enactment. New federal and non-federal projects and activities are required, to the extent practicable, to minimize direct and adverse effects on the values for which the river is under study and to utilize existing structures.	This law was enacted November 4, 1988.

CFR: Code of Federal Regulations
LFI: limited field investigation
PL: Public Law

3.0 INVESTIGATION RESULTS AND CONCLUSIONS

This chapter presents results and conclusions from the intrusive investigation of the 116-C-2A pluto crib, and the nonintrusive investigations of the remaining high-priority sites and solid-waste burial grounds; it also reevaluates the status of the low-priority sites.

The following types of data are presented in the discussions:

- site location, size, characteristics, history and expected contaminants
- geologic data obtained during the investigation (intrusive investigation only)
- field screening data collected using hand-held instruments during sampling (intrusive investigation only)
- borehole spectral gamma geophysical logging results (intrusive investigation only)
- results from offsite laboratory analysis of sediment samples for inorganics, anions and radionuclides (intrusive investigation only), data validation qualifier codes associated with specific analyses are included in tables at the end of Section 3.0
- reconnaissance surface geophysics results (118-B-1 and 118-C-1 only)
- results from historical investigations at the site and comparison of the LFI data to the historical data (intrusive investigation only)
- analogous site data from other operable units
- groundwater data sampled between July 1992 and January 1993 from the 100-BC-5 LFI monitoring wells up and downgradient (if any) from the sites.

This chapter also presents the human health and ecological qualitative risk evaluation for the high-priority waste sites and the solid waste burial grounds at the 100-BC-2 Operable Unit. The individual site risk characterizations were performed using the maximum concentrations of the COPC identified in Tables 2-1 through 2-4 and the methodology described in Sections 2.5.1, 2.5.3 and 2.5.5.

The risk characterizations in this QRA were based on a number of conservative assumptions. Although these assumptions served to simplify the risk characterization process, the resulting numerical values do not represent the most realistic estimates of risks and hazards to human and ecological receptors.

9413293.3053

3.1 BACKGROUND SOIL SAMPLING

Background sampling was used to identify radiological and inorganic constituents in the soil that occur naturally or as a result of widespread anthropogenic sources. The characterization of background soil constituent concentrations has been conducted both on a 100 B/C Area project-specific and on a Hanford Sitewide basis. The results of the Hanford Sitewide characterization are presented in Section 2.2.4; the results of the 100 B/C project-specific characterization are presented below.

The 100-BC-2 Operable Unit project-specific control was determined based on two samples collected from surface soil at the same nonwaste site location as the samples collected for the 100-BC-1 LFI (DOE-RL 1993d). This site is located near the south-east border of the 100-BC-1 Operable Unit (Figure 2-2). These background samples were analyzed for the same constituents as their respective LFI samples. Detected analytes, which correspond to the 100-BC-2 analyte list, and their concentrations are summarized in Table 3-1. The data from these samples are presented for information purposes only; these results were not used in screening the LFI data, and they are not sufficient to calculate statistically valid background concentrations.

9413293.3054

3.2 HIGH-PRIORITY SITES

The high-priority sites in the 100-BC-2 Operable Unit are the components of the 116-C-2 pluto crib system. The 116-C-2 pluto crib system was constructed approximately 76 m (250 ft) east of the 105-C Reactor building to receive contaminated cooling water flushed from process tubes affected by fuel cladding failures. The crib system was apparently also the primary liquid waste disposal site for the irradiated fuel examination facility in the C Reactor building, and spacer and hardware decontamination done on the C Reactor building washpad.

The 116-C-2 pluto crib system consisted of three parts: the 116-C-2A pluto crib, the 116-C-2B pump station and the 116-C-2C sand filter (Figures 3-1 and 3-2).

3.2.1 116-C-2A Pluto Crib

3.2.1.1 Site Description. The 116-C-2A pluto crib (Figure 3-2) was the largest pluto crib in the 100 Areas, measuring 7 x 4.9 x 1.5 m deep (23 x 16 x 5 ft). The crib is an unlined structure covered by a six-inch thick concrete slab. The top of the crib was encountered at 5.7 m (18.7 ft) bls during drilling of borehole, 199-B9-4. There was approximately 1.06 m (3.5 ft) of open space between the concrete slab bottom and the crib sediments. Figure 3-3 shows a schematic of the 116-C-2A pluto crib. The 116-C-2A pluto crib was the only crib in the 100 Areas to be preceded by a sand filter and to receive filtered effluents.

3.2.1.2 Geologic Data. This site is characterized by sandy gravel fill to a depth of 5.70 m (18.71 ft) bls. At this depth the concrete slab which caps the crib was encountered. Below the slab was open crib space until approximately 6.98 m (22.9 ft) bls. Approximately

0.33 m (1 ft) of concrete slab fragments are lying on top of the crib sediments. The sediments from 7.28 to 7.65 m (23.9 to 25.1 ft) are very fine sand or silt. Sand was encountered in the borehole between 7.65 and 7.99 m (25.1 and 26.2 ft) bls. Sandy gravel was present from 7.99 to 13.34 m (26.2 to 43.8 ft) and from 14.48 to 17.22 m (47.5 to 56.5 ft) bls, the total depth of the hole. A layer of gravel was encountered between 13.34 and 14.48 m (43.75 and 47.5 ft) bls. A summary of the geology is shown in Figure 3-4.

3.2.1.3 Field Screening. The well site geologist performed field screening for VOC using an OVM. Ambient VOC background was 0.0 ppm. No VOC were detected by field screening during drilling.

The well site geologist performed field screening for radioactivity using a Ludlum 14C portable scintillation detector with a gross gamma probe. A health physics technician performed a second field screening of beta-gamma activity using a Geiger-Mueller (GM) detector with a P-11 probe. The site gross gamma background ranged from 2,000 to 2,300 cpm; the area gross gamma background was 2,800 cpm. The gross gamma field screening level ranged from 4,800 to 5,100 cpm. The maximum observed gross gamma level was 26,000 cpm from the concrete fragments on the top of the crib sediments. Figure 3-4 shows a summary of the gross gamma field screening results.

9413293.3055

3.2.1.4 Geophysical Logging. The borehole was logged from 0 to 16.52 m bls (0 to 54.2 ft), 0.70 m (2.3 ft) less than the total depth of the borehole. The radionuclides detected were cobalt-60, europium-152 and europium-154. The maximum activity was found at 6.71 m (22 ft) bls. A diagram showing the intervals of occurrence and depths of maximum decay activity for each radionuclide is included in Figure 3-4. A copy of the log is in Appendix A.

3.2.1.5 Analytical Results. Six sediment samples, and three quality assurance/quality control samples, were collected between July 15 and July 20, 1993 from the 199-B9-4 borehole and submitted for chemical and radiological analysis. A seventh sample was taken in the first sample interval; due to poor recovery, this sample was only analyzed for radionuclides. The sample numbers, depth intervals, and a summary of detected analytes are shown in Table 3-2.

Sample B08RB7 was taken from the concrete slab fragments from the cap of the pluto crib. This sample was analyzed for inorganics only, due to limited sample volume. The results show consistently higher concentrations of the analytes, including the only detections of antimony and copper (Table 3-3).

Cadmium, chromium and zinc were detected in concentrations above the Hanford Site background 95% UTL (Table 2-4). These elevated levels occur in samples B08R96 and B08R97; both samples were collected in the interval between 6.98 and 8.20 m (22.9 and 26.9 ft) bls.

The following radionuclides were detected: carbon-14, potassium-40, cobalt-60, nickel-63, strontium-90, europium-152, europium-154, europium-155, radium-226,

radium-228, thorium-228, thorium-232, uranium-233/234, uranium-238, plutonium-239/240 and americium-241. The concentrations for these radionuclides are summarized in Table 3-2 and as follows:

- Gross alpha levels ranged from 3.4 to 23 pCi/g.
- Gross beta levels ranged from 15 to 850 pCi/g.
- Potassium-40, cobalt-60, nickel-63, europium-152, europium-154 and europium-155 had maximum concentrations between 6.80 and 9.44 m (22.9 and 30 ft) bls, decreasing steadily with depth below 10.67 m (35 ft) bls.
- Radium-226, radium-228 and thorium-232 were detected at relatively uniform (< 1 pCi/g) concentrations below 10.67 m (35 ft) bls.
- Thorium-232 was detected (0.9 pCi/g) in the 6.98 to 8.20 m (22.9 to 26.9 ft) interval and at stable concentrations (< 0.6 pCi/g) below 10.67 m (35 ft) bls.
- Carbon-14 was detected in the 14.69 to 15.45 m (48.2 to 50.7 ft) interval.
- The maximum strontium-90 concentration occurs between 10.67 and 11.28 m (35 to 37 ft) bls.
- Uranium-233/234 and uranium-238 concentrations are < 0.6 pCi/g throughout the depth of the borehole.

No anions were detected above the Hanford Site background 95% UTL (Table 3-2).

3.2.1.6 Historical Data. Dorian and Richards (1978) drilled 5 test holes in the 116-C-2A pluto crib (Figure 3-5). The analytical results are presented in Appendix B. A summary of detected radioisotopes, decayed to July 1993 activities (17 years, 90 days), is shown in Table 3-4. Results from seven samples, ranging in depth from 7.62 to 15.24 m (25 to 50 ft) bls, from three boreholes (B,D and E) were reported. The following radionuclides were detected: tritium, total uranium, cobalt-60, strontium-90, cesium-134, cesium-137, europium-152, europium-154 and europium-155. The maximum decayed activities for all detected radionuclides were reported between 9.14 and 10.67 m (30 and 35 ft) bls as follows:

- cobalt-60, strontium-90, cesium-137, europium-152 and europium-155 at 9.14 m (30 ft) bls in testhole D
- tritium at 10.67 m (35 ft) bls in testhole E
- cesium-134 at 10.67 m (35 ft) bls in testhole D
- total uranium and europium-154 at 10.67 m (35 ft) bls in testhole B.

3.2.1.7 Analogous Sites. The 116-C-2A pluto crib system is unique as no other pluto crib in the 100 Areas is preceded by a sand filter. The data from other pluto cribs have some bearing, however; the effluent that entered the 116-C-2A pluto crib may have had the same contaminants as the effluent to the other pluto cribs. Three pluto cribs: the 116-F-4 (DOE-RL 1994b), 116-B-3 (DOE-RL 1993d) and 116-D-2A (DOE-RL 1994c), are the possible analogous sites for which data are available. Samples from these sites were analyzed for the full suite of contaminants, including VOC. Organics compounds were not included in the analyte list for 166-C-2A (DOE-RL 1993a, Kytola 1993). The process knowledge did not suggest disposal of any organic compounds to the 116-C-2A pluto crib system.

Inorganic compounds were detected above the Hanford Site background 95% UTL in two of the three analogous sites (Table 3-5). Barium was detected in 116-F-4. Cadmium, chromium and silver were detected in 116-B-3.

Volatile organic compounds were detected in all three of the analogous sites (Table 3-5). The 116-F-4 crib showed detectable levels of 2-butanone, acetone, methylene chloride and toluene. The 116-B-3 crib showed detectable levels of 2-butanone, 4-methyl-2-pentanone, acetone and benzene. The 116-D-2A crib showed elevated levels of methylene chloride and toluene.

Semi-volatile organic compounds were detected in two of the analogous sites (Table 3-5). The 116-F-4 crib showed detectable levels of bis(2-ethylhexyl)phthalate, di-n-butylphthalate, and di-n-octylphthalate. The 116-B-3 crib showed detectable levels of anthracene, benzo(a)anthracene, benzo(a)pyrene, benzo(b)fluoranthene, benzo(k)fluoranthene, chrysene, fluoranthene and phenanthrene.

The pesticide, endrin, was detected in the 116-D-2A crib (Table 3-5).

Radionuclides were detected in all of the analogous sites (Table 3-5). The 116-F-4 crib showed activities for potassium-40, strontium-90, cesium-137, europium-152, thorium-232, uranium-238, plutonium-239/240 and americium-241. The 116-B-3 crib showed activities for carbon-14, strontium-90 and cesium-137. The 116-D-2A crib showed activities for potassium-40, strontium-90, cesium-137, europium-152, europium-154, radium-226, and plutonium-239/240.

3.2.1.8 Groundwater Impact. Monitoring well 199-B9-1 is located within the boundaries of the 116-C-2A pluto crib. It was installed during the construction of the pluto crib to monitor for groundwater contamination caused by disposal to the crib. Monitoring well 199-B9-2 is located downgradient of the crib. There are no B/C Area monitoring wells located upgradient of the site. The 1607-B9 septic system and drain field is another possible liquid waste disposal source of contamination for these wells; the 118-C-1 burial ground is also located upgradient from these wells (Table 3-6). Monitoring well 199-B9-1 is a possible pathway for contamination to migrate to groundwater: it shows consistent concentrations of tritium, strontium-90 and technetium-99 (Table 3-7). Well 199-B9-2 shows consistent concentrations of tritium and technetium-99 (Table 3-7). The 116-C-2A pluto crib might be the source of this radionuclide contamination.

3.2.1.9 LFI Results. The LFI results show the majority of the contamination in the 116-C-2A pluto crib in the upper portion of the crib. All of the inorganic contaminant concentrations are less than the 95% UTL values below 8.38 m (27.5 ft) bls. The majority of the detected radionuclides show maximum activity levels in the 6.98 to 8.20 m (22.9 to 26.9 ft) bls interval. Of the radionuclides that do not follow this trend, only strontium-90 is not naturally occurring. The strontium-90 maximum activity level occurs in the 10.67 to 11.28 m (35 to 37 ft) bls interval; below which the activity level decreases with depth.

Concentrations reported by Dorian and Richards (1978) are generally consistent with radionuclide data obtained in LFI borehole 199-B9-4 at the pluto crib site. Historical data (Dorian and Richards 1978) also follow the same general trend as in the LFI borehole. The maximum decayed activities occur in the top 9.14 m (30 ft), and decrease with depth. The isotopes analyzed for and detected in the historical data correspond to the contaminants found during the LFI. Tritium, cesium-134 and cesium-137 are the only historical isotopes with no LFI detections. The decayed activity levels for both cesium isotopes were below 1 pCi/g. The maximum decayed activity level for tritium was located at 10.67 m (35 ft) bls.

The detected radionuclides in the analogous sites corresponded to the radionuclides found at the 116-C-2A pluto crib. The inorganic contaminants are not comparable with the other pluto cribs. The VOC detected in the analogous sites are probably laboratory artifacts.

The presence of radionuclides in the two downgradient monitoring wells indicates the 116-C-2A pluto crib may be a source of groundwater contamination. The absence of upgradient well information to compare contaminant concentrations to make the actual impact of the pluto crib on the groundwater uncertain.

Field screening of the concrete sample indicated radionuclide contamination. The elevated inorganic constituent concentrations indicated by the laboratory analysis most likely reflect the composition of the concrete aggregate rather than any contamination.

3.2.1.10 Human Health Risk Characterization. No LFI borehole or historical samples were collected in the 0 to 4.6 m (0 to 15 ft) interval. Maximum soil analyte concentrations and the sampling depth range are listed in Table 2-4. Because all detected analyte concentrations were below 4.6 m (15 ft), a human health risk analysis is not conducted.

3.2.1.11 Ecological Risk Characterization. No ecological risk characterization is provided as there were no samples collected in the 0 to 4.6 m (0 to 15 ft) interval.

3.2.2 116-C-2B Pluto Crib Pump Station

3.2.2.1 Site Description. The 116-C-2B pluto crib pump station (Figure 1-2) is a 3 x 2.4 x 9.1 m (10 x 8 x 30 ft) underground structure. It pumped liquid wastes from the C Reactor building through a pipe into the 116-C-2C pluto crib sand filter. Figure 3-6 is a schematic of the pump station.

3.2.2.2 Geologic Data. No intrusive investigation for the LFI was done on the 116-C-2B pluto crib pump station, therefore no direct geologic descriptions are available. Because the pump station is adjacent to the pluto crib it is assumed that sandy gravels described in the 199-B9-4 borehole occur at the 116-C-2B pump station.

3.2.2.3 Field Screening. No intrusive investigation for the LFI was done on the 116-C-2B pluto crib pump station, therefore no field screening readings were taken.

3.2.2.4 Geophysical Logging. No intrusive investigation for the LFI was done on the 116-C-2B pluto crib pump station, therefore no spectral gamma logs were obtained.

3.2.2.5 Analytical Results. No samples were taken and analyzed for the LFI from the 116-C-2B pluto crib pump station.

3.2.2.6 Historical Data. Dorian and Richards (1978) drilled one test hole next to the 116-C-2B pluto crib pump station (Figure 3-5). The analytical results are presented in Appendix B. A summary of detected radioisotopes, decayed to July 1993 activities (17 years, 90 days), are shown in Table 3-8. Results from one sample, taken at 9.14 m (30 ft) bls were reported. The following radionuclides were detected; tritium, cobalt-60, strontium-90, cesium-134, cesium-137, europium-152, europium-155 and plutonium-239/240.

3.2.2.7 Analogous Sites. The 116-C-2B pluto crib pump station has no designated analogous sites. The pump station is part of the 116-C-2 pluto crib system. Contaminants identified by the LFI sampling in the 116-C-2A pluto crib pertain to the entire system. The following contaminants were detected in the 116-C-2A pluto crib:

- metals: cadmium, chromium, and zinc
- radionuclides: carbon-14, potassium-40, cobalt-60, nickel-63, strontium-90, europium-152, europium-154, europium-155, radium-226, radium-228, thorium-228, thorium-232, uranium-233/234, uranium-238, plutonium-239/240, and americium-241.

3.2.2.8 Groundwater Impact. There are no monitoring wells downgradient from the 116-C-2B pump station close enough to be useful in determining the impact it has on groundwater. Monitoring well 199-B4-5 is the closest well, it is over 200 m (656 ft) away and there are numerous other possible source sites (Table 3-6). There are no B/C Area monitoring wells located upgradient of the pump station.

3.2.2.9 LFI Results. The contaminants found during the LFI at the 16-C-2A pluto crib are applicable to the 116-C-2B pump station. The two sites are part of the same system and handled the same effluent.

The historical investigation (Dorian and Richards 1978) detected radionuclide contamination at the base of the pump station. This contamination indicates some effluent leaked from the pump station into the surrounding sediments. The radioisotopes reported in the historical data correspond to those reported in the pluto crib LFI data. Tritium,

cesium-134 and cesium-137 are the only radionuclides not found in LFI samples. The decayed activity of both cesium isotopes are below 1 pCi/g; the decayed activity of tritium is below 20 pCi/g.

The impact to groundwater cannot be determined due to lack of monitoring wells close to the pump station. The potential of groundwater impact does exist based on the assumption that the contamination detected in the historical investigation is a result of effluent that leaked from the pump station.

3.2.2.10 Human Health Risk Characterization. No LFI borehole samples were taken at this site. Historical sampling data are available only for depths >4.6 m (15 ft). Maximum soil analyte concentrations and the sampling depth range is summarized in Table 2-5. Because all detected analyte concentrations were below 4.6 m (15 ft), a human health risk analysis is not provided.

3.2.2.11 Ecological Risk Characterization. No ecological risk characterization is provided as there were no samples collected in the 0-4.6 m (0-15 ft) interval.

9413293.3060

3.2.3 116-C-2C Pluto Crib Sand Filter

3.2.3.1 Site Description. The 116-C-2C pluto crib sand filter (Figure 1-2) is an enclosed concrete box, 11.5 x 5.5 x 5.5 m (38 x 18 x 18 ft), filled with basalt sand (Figure 3-7). Effluents were discharged to the sand filter through distributor trays; excess effluent was then discharged from the sand filter through a pipe to the pluto crib. The sand filter is covered with concrete shielding slabs. It is not known if the sand filter was ever cleaned out.

3.2.3.2 Geologic Data. No intrusive investigation for the LFI was done on the 116-C-2C pluto crib sand filter, therefore no direct geologic descriptions are available. Because the sand filter is close to the pluto crib, it is assumed that the sandy gravels described in the 199-B9-4 borehole surround the 116-C-2C sand filter.

3.2.3.3 Field Screening. No intrusive investigation for the LFI was done on the 116-C-2C pluto crib sand filter, therefore no field screening readings were taken.

3.2.3.4 Geophysical Logging. No intrusive investigation for the LFI was done on the 116-C-2C pluto crib sand filter, therefore no spectral gamma logs were obtained.

3.2.3.5 Analytical Results. No samples were taken and analyzed for the LFI from the 116-C-2C pluto crib sand filter.

3.2.3.6 Historical Data. Dorian and Richards (1978) drilled four test holes around, and took four grab samples within the 116-C-2C pluto crib sand filter (Figure 3-5). The analytical results are presented in Appendix B. A summary of detected radioisotopes, decayed to July 1993 activities (17 years, 90 days), is shown in Table 3-9.

Results from three samples, ranging in depth from 6.86 to 9.14 m (22.5 to 30 ft) bls, from two boreholes (A and C) were reported. The following radionuclides were detected: tritium, uranium, cobalt-60, strontium-90, cesium-134, cesium-137, europium-152, europium-154, europium-155, plutonium-238 and plutonium-239/240. The maximum activities for all of the detected radionuclides were reported from test hole A as follows:

- at 7.62 m (25 ft) bls; tritium, cobalt-60, cesium-137, plutonium-238, plutonium-239/240, and uranium

- at 9.14 m (30 ft) bls; strontium-90, cesium-134, europium-152, europium-154, and europium-155.

Results from all of the grab samples were reported. The samples were taken from the inlet distribution tray, outlet distribution tray, inlet filter bed, and outlet filter bed. The following radionuclides were detected: tritium, cobalt-60, strontium-90, cesium-137, europium-152, plutonium-238 and plutonium-239/240. The maximum activities for all of the detected radionuclides, except europium-152, were reported from the inlet distribution tray. Only the sample from the inlet filter bed was analyzed for europium-152. The activity levels for most of the isotopes are higher in the inlet samples than in the corresponding outlet samples. The cobalt-60 levels for the filter bed samples are the only exception.

9413294.3061

3.2.3.7 Analogous Sites. The 116-C-2C pluto crib sand filter has no designated analogous sites. The sand filter is part of the 116-C-2 pluto crib system. Contaminants identified by the LFI investigation in the 116-C-2A pluto crib pertain to the entire system. The following contaminants were detected in the 116-C-2A pluto crib:

- metals: cadmium, chromium and zinc

- radionuclides: carbon-14, potassium-40, cobalt-60, nickel-63, strontium-90, europium-152, europium-154, europium-155, radium-226, radium-228, thorium-228, thorium-232, uranium-233/234, uranium-238, plutonium-239/240, and americium-241.

Data from sites analogous to the 116-C-2 pluto crib system are discussed in Section 3.2.1.7.

3.2.3.8 Groundwater Impact. There are no monitoring wells downgradient from the 116-C-2C sand filter close enough to be useful in determining the impact it has on groundwater. Monitoring well 199-B4-5 is the closest well. It is over 200 m (656 ft) away and there are numerous other possible source sites (Table 3-6). There are no B/C Area monitoring wells located upgradient of the sand filter.

3.2.3.9 LFI Results. The contaminants found by the LFI at the 116-C-2A pluto crib are considered to be applicable to the 116-C-2C sand filter. The two sites are part of the same system.

Dorian and Richards (1978) reported radionuclide contamination below the sand filter. This contamination indicates some effluent leaked from the sand filter into the surrounding sediments. The radioisotopes reported in the historical data correspond to those reported in the pluto crib LFI data. Tritium, cesium-134 and cesium-137 are the only nuclides not found at the 116-C-2A pluto crib. The decayed activity of cesium-134 is below 1 pCi/g and the decayed activity of tritium is below 40 pCi/g. The maximum Dorian and Richards (1978) decayed activity for cesium-137 is more significant, almost 200 pCi/g. Dorian and Richards (1978) found that radioactivity within the sand filter is much higher than that of the surrounding sediments. The relative trend of a decrease in activity levels from the inlet to the outlet of the sand filter possibly indicates that at least some of the radionuclides were separated from the effluent.

The impact to groundwater cannot be determined due to lack of monitoring wells close to the sand filter. The potential of groundwater impact does exist based on the assumption that the contamination detected in the historical investigation is a result of effluent that leaked from the sand filter.

9413293.3062

3.2.3.10 Human Health Risk Characterization. Historical soil grab sample data were decayed to July, 1993 and provide maximum soil analyte concentrations which are summarized along with the sampling depth ranges in Table 2-6. Incremental cancer risk estimated for the frequent-use and occasional-use scenarios at the 116-C-2 pluto crib sand filter are summarized in Table 3-10.

The human health risk characterization is based on Dorian and Richards (1978) historical sampling data using maximum soil concentrations detected from a depth 0 to 4.6 m (0 to 15 ft). This data was obtained from grab samples and the maximum contaminant concentration was at a depth of 0.91 m (3 ft).

Several COPC represent estimated ICR > 1E-06 in the frequent-use scenario. Cobalt-60, strontium-90, cesium-137, europium-152, plutonium-238 and plutonium-239/240 soil concentrations represent ICR > 1E-06 from the ingestion exposure pathway. Cobalt-60, strontium-90, cesium-137, plutonium-238 and plutonium 239/240 represent ICR > 1E-06 from the inhalation exposure pathway. An ICR > 1E-06 is also estimated from external exposure to cobalt-60, cesium-137 and europium-152.

In the occasional-use scenario cobalt-60, strontium-90, cesium-137, plutonium-238, and plutonium-239/240 represent an ICR > 1E-06 from the ingestion exposure pathway. Cobalt-60, plutonium-238 and plutonium-239/240 represent an ICR > 1E-06 from the inhalation pathway. For the external exposure pathway cobalt-60, cesium-137 and europium-152 represent an ICR > 1E-06.

The total estimated lifetime ICR to humans is > 1E-02 for both the frequent- and occasional-use scenarios, therefore the human health qualitative risk classification is "high". The external radiation exposure is considered to be the primary pathway contributing to ICR. Cobalt-60, cesium-137 and europium-152 are considered the greatest contributors in both scenarios.

The total ICR anticipated, if the onset of the frequent-use scenario exposures is delayed until 2018, is >1E-02 for the frequent-use scenario and >1E-02 for the occasional-use scenario (Table 3-11). The primary pathway contributing to risk would remain the external radiation pathway and the qualitative risk classification remains high for the frequent-use scenario and the occasional-use scenario.

An allowance for the shielding effects of clean-fill soils is not expected to significantly reduce the external radiation exposure risks in the occasional-use scenario. The maximum soil concentrations of the primary risk-contributing COPC were all measured within 1.8 m (6 ft) below the surface at this site.

3.2.3.11 Human Health Risk Characterization Uncertainty Analysis. General uncertainties attributed to the methodology used in this QRA are discussed in Section 2.6.4. Uncertainties inherent in the quality of the data used in the human health risk characterization were discussed in Section 2.6.2. Maximum contaminant concentrations were obtained from historical data, therefore the uncertainty associated with the data is moderate.
The uncertainty associated with external exposure for the occasional-use scenario is considered low at this site since the exposure point contaminant concentrations are located in the upper 1.8 m (6 ft) of soil. However, the pluto crib sand filter is covered with concrete shielding slabs, making entry difficult and attenuating external radiation intensity. The exposure uncertainty for the 0 to 4.6 m (0 to 15 ft) interval in the frequent-use scenario is high because future land-use has not been identified and frequent-use does not currently occur at this site. General toxicity assessment uncertainties are discussed in Section 2.6.4.2 and is considered moderate to high for this site. Table 4-1 summarizes data and exposure uncertainty.

3.2.3.12 Ecological Risk Characterization. The total calculated dose rates to the Great Basin pocket mouse from radionuclides in the soil inside the 116-C-2C pluto crib sand filter are listed on Table 3-12 and summarized on Table 3-13. The total dose from radionuclides in soils shallower than 1.8 m (6 ft) exceeds the EHQ (1 rad/day) by 2 orders of magnitude. Strontium-90 and cobalt-60 each exceed the EHQ, although strontium-90 is the primary contributor to the dose rate.

3.2.3.13 Ecological Risk Characterization Uncertainty Analysis. The uncertainty associated with the approach used in the qualitative ecological characterization is described in Section 2.6.6. In addition, the pluto crib sand filter is covered with concrete shielding slabs. As a result, it is less likely that plant roots would contact contaminated soil and move contaminants into the food chain.

3.3 SOLID WASTE BURIAL GROUNDS

The following discussions of solid waste burial grounds are limited, presenting only the current understanding of the individual site conceptual model. a qualitative risk assessment was not prepared for these sites as no LFI or historical sampling data are available. An exception to this is the 118-B-1 Burial Ground; this site was sampled by Dorian and Richards

(1976) and sufficient historical data exists to perform a QRA. The discussion of the 118-B-1 burial ground site is more extensive.

3.3.1 118-B-1 Burial Ground

3.3.1.1 Site Description. The 118-B-1 burial ground is located 914 m (3,000 ft) west of the 105-C Reactor building (Figure 1-2). The site boundaries are permanently marked with concrete posts numbered B-81-1 through B-81-31. The dimensions of the burial ground are approximately 305 x 98 m (1,000 x 321 ft) with a depth of approximately 6.1 m (20 ft). The site consists of a series of trenches, running generally east-west, perforated burials (excavations shored with railroad ties) and spline silos. Relative trench locations for the 118-B-1 burial ground are shown on Figure 3-8.

The first trench, in the 118-B-1 burial ground, was excavated in 1944 and the site received waste until 1973. Stenner et al. (1988) estimates that 10,000 m^3 (353,100 ft^3) of waste has been buried at this site. Trenches received general reactor wastes from the 100 B and 100 N Reactors that included aluminum tubes, irradiated facilities, thermocouples, vertical and horizontal aluminum thimbles, stainless-steel gun barrels, and expendables consisting of plastic, wood, and cardboard (Dorian and Richards 1978). Spline silos received metallic wastes (Stenner et al. 1988).

A second burial site was started in early 1950 south and adjacent to the 118-B-1 burial trenches. This area was called the 108-B solid waste burial ground and has now been incorporated into the 118-B-1 burial ground. Solid tritium wastes and high-level liquid tritium wastes sealed in 8 cm (3 in) diameter iron pipes were buried here. This site was used to dispose of contaminated tritium pots and irradiated process tubing in 1952. Another trench, in this second burial area, contains contaminated perfs. Heid (1956) discusses three trenches at this site which were covered with 1.8 m (6 ft) of soil.

A 61 x 15.2 m (200 x 50 ft) extension was added adjacent to and at the middle of the west 118-B-1 boundary in the spring of 1956. Contaminated yokes from the 105-B Reactor building were buried in the extension (Heid 1956).

Based on Miller and Wahlen (1987), the estimated decayed inventory is as follows:

Radionuclide	Quantity in curies (decayed through 7-1-93)
tritium	2,500
carbon-14	0.66
calcium-41	0.01
nickel-59	0.3
nickel-63	246
cobalt-60	127
strontium-90	0.3
silver-108m	8.6
barium-133	0.3
cesium-137	0.3
europium-152	1.6
europium-154	0.92

Estimates of metallic and other wastes for the 118-B-1 burial ground are as follows (Miller and Wahlen 1987).

Material	Amount (Tons)
Aluminum[1]	135.2
Boron[2]	1.4
Lead	30
Lead/Cadmium	201.2/8.4
Graphite	0.08
Mercury	1.0
Other[3]	527

1 Includes aluminum cans on lead/cadmium pieces, spacers, and aluminum contained in splines.

2 Includes boron from splines, vertical safety rods (VSR), and horizontal control rods (HCR).

3 Includes soft waste, desiccant, and miscellaneous materials.

3.3.1.2 Geophysical Surveys. Surface based reconnaissance GPR and EMI surveys were completed at the 118-B-1 burial ground (Bergstrom 1993). Twenty-two areas, representing trenches, silos, and other large features were identified in the survey by areas of high anomaly concentration. Numerous other smaller features of unknown origin were also identified. Bergstrom (1993) presents an interpretation map of the 118-B-1 burial ground showing the 22 zones and other detected features. The report also presents an estimated depth to detected features of 0.6 to 4.3 m (2 to 14 ft) based on GPR results.

The survey indicates no buried debris occurs outside of the permanent burial ground markers, and that good definition of buried waste can be achieved using these methods.

Electro-magnetic induction was effective at locating concentrations of metallic debris possibly up to 5.5 m (18 ft) deep. Ground-penetrating radar was effective at locating objects between 0.6 and 4.3 m (2 and 14 ft) deep.

3.3.1.3 Historical Data. Historical data available for the 118-B-1 burial ground is limited to process knowledge and limited sampling conducted in 1976 (Dorian and Richards 1978). Boreholes were drilled into individual waste trenches and samples collected. The waste trenches sampled were used between the early 1940's to after 1966. The following discussion presents the results of this sampling effort.

Six borings (A - F, Figure 3-8) were drilled in trenches used between 1944 and 1956. Samples collected showed very little radioactivity. In situ GM probe readings taken in the sample holes showed background levels. The results of the in situ GM probe survey are presented on Table 3-14. Pieces of cadmium and lead with aluminum jackets were found in some samples (Dorian and Richards 1978). One sample was collected from boring A at 6.1 m (20 ft) bls for radiological analysis. The results are presented in Appendix B. The results decayed to July 1993 (17 years, 90 days) are reported on Table 3-15.

Boring G (Figure 3-8) was drilled into a trench used between 1958 and 1960. Low level contamination was first detected at 4.6 m (15 ft) bls. Geiger-Mueller counts for this sample were < 100 cpm. Pieces of reactor poison were recovered from 6.1 to 6.2 m (20 to 20.5 ft) depth. A small piece of aluminum was recovered from 6.7 m (22 ft) bls that caused a GM reading of 15,000 cpm. Samples were collected from 7.6 and 9.1 m (25 and 30 ft) bls with no detectable contamination (Dorian and Richards 1978). In situ GM probe readings were taken from this boring and are reported on Table 3-14. Radiological analysis was performed on three samples. The results are presented in Appendix B. The results decayed to July 1993 (17 years, 90 days) are reported on Table 3-15.

Borings H, I and J were drilled into trench number 13 (Figure 3-8). This trench is the southern most trench in the burial ground and is approximately 9.1 m (30 ft) wide (Dorian and Richards 1978). In boring H the first detectable radiation was 28,000 cpm at 3.7 m (12 ft) bls. The GM readings went off the scale at 5.2 m (17 ft) bls. The GM probe was changed to a low-range totem pole (LTP) probe. The maximum LTP reading was 30 mR/hr at 6.1 m (20 ft) bls. In situ GM readings for boring H are reported on Table 3-14. Results from samples collected for radiological analysis from boring H are listed in Appendix B. The results decayed to July 1993 (17 years, 90 days) are reported on Table 3-15.

Boring I showed no detectable contamination using the handheld GM probe (Table 3-14). Only one in situ GM probe result was reported in Dorian and Richards (1978). At 6.1 m (20 ft) bls the count rate of 600 cpm.

Boring J was drilled 1.8 m (6 ft) south of boring I to a depth of 9.8 m (32 ft) bls (Figure 3-8). Between 3.05 and 7.6 m (10 and 25 ft) depth 1/2-in diameter steel tubing was encountered. Dorian and Richards (1978) reported that this tubing may have been from N Area steam generator repair. Low level contamination, < 100 cpm, was first detected by a handheld GM probe at 7.6 m (25 ft) bls. At 9.3 m (30.5 ft) bls, the count rate was

600 cpm, then dropped to below 100 cpm. In situ GM probe readings are listed on Table 3-14. Results from samples collected for radiological analysis are listed in Appendix B. The results decayed to July 1993 (17 years, 90 days) are reported on Table 3-15.

No detectable radioactivity was measured from borings K and L.

Boring M samples had background handheld GM readings down to 6.1 m (20 ft) bls. Below 6.1 m (20 ft) activity levels increased to a maximum of 7,000 cpm at 7.01 and 7.6 m (23 and 25 ft) bls. Insitu GM probe readings are listed on Table 3-14. Pieces of wood, plastic, sheet cadmium, concrete and other debris was recovered from this boring. Radiological sample analysis results are listed in Appendix B. The results decayed to July 1993 (17 years, 90 days) are reported on Table 3-15.

Handheld GM readings from boring N were all at background levels. In situ GM probe counts however do show contamination in the vicinity of the boring. The in situ GM probe results are presented on Table 3-14.

9413293.3067

3.3.1.4 Analogous Sites. Sites within the 100 Areas which are analogous to the 118-B-1 burial ground are listed on Table 1-2. However, there have not been any investigations completed on analogous burial grounds.

3.3.1.5 Groundwater Impact. Only one well, 199-B8-6, is near 118-B-1 burial ground (Table 3-6). Based on water table maps for the 100-BC-5 Operable Unit LFI (DOE-RL 1993b) it is uncertain whether this well is downgradient or crossgradient from the burial ground. There are no nearby upgradient groundwater monitoring wells. The 100-BC-5 Operable Unit LFI (DOE-RL 1993b) reported that carbon-14 was detected in one round of sampling, however the following two rounds were nondetect. Tritium and technetium-99 were also detected in low concentrations (Table 3-16), however higher concentrations of these two contaminants have been detected in wells further downgradient. Based on these data it does not appear that the 118-B-1 burial ground is a contributing source to the groundwater.

3.3.1.6 LFI Results. No intrusive investigations were completed at the 118-B-1 burial ground as part of this LFI. Surface based reconnaissance GPR and EMI surveys were completed to locate the heaviest concentration of buried debris. The geophysical surveys indicate that buried waste is not found outside of the permanent burial ground markers and good definition of the burial trenches was achieved. The EMI method is effective at locating metallic objects possibly up to 5.5 m (18 ft) in depth and GPR is effective at locating objects between 0.61 and 4.3 m (2 and 14 ft) deep.

Based on historical radiological analysis of soil samples from borings (Dorian and Richards 1978), radionuclide contamination is present in the soils within the 118-B-1 burial ground. The migration of these contaminants within the subsurface appears to be limited. This is less certain near trenches H and J because the vertical extent of contamination is not characterized. There are no observable impacts to groundwater.

3.3.1.7 Human Health Risk Characterization. The human health risk characterization is based on Dorian and Richards (1978) historical sampling data using maximum soil concentrations detected from a depth 0 to 4.6 m (0 to 15 ft). The maximum analyte concentration at this site was detected at a depth of 4.6 m (15 ft). Maximum soil analyte concentrations and the sampling depth ranges are summarized in Table 2-7. Risks estimated for the frequent-use and occasional-use scenarios at the 118-B-1 burial ground are summarized in Table 3-17.

No COPC are estimated to represent ICR > 1E-06 from ingestion or inhalation exposure pathways in the frequent-use scenario. Cobalt-60, cesium-137, europium-152, and europium-154 represent ICR > 1E-06 from the external exposure pathway in the frequent-use scenario. In the occasional-use scenario cobalt-60 represents ICR > 1E-06 from the external exposure pathway.

The total estimated lifetime ICR to humans was considered "medium" in the frequent-use scenario and "low" in the occasional-use scenario. The external radiation exposure is considered to be the primary pathway contributing to ICR. Cobalt-60 is considered to be the greatest contributor in both scenarios.

The total ICR anticipated, if the onset of the frequent-use scenario exposures is delayed until 2018, is 4E-05 for the frequent-use scenario 3E-07 for the occasional-use scenario (Table 3-18). The primary pathway contributing to risk would remain the external radiation pathway and the qualitative risk classification is reduced to a "low" for the frequent-use scenario at this site (Table 3-19).

Process knowledge information indicates that this burial ground received the bulk of solid waste from the operation of 105-B Reactor as well as waste from the tritium separation program gas line (108-B building). No soil sampling data of the solid waste is available at this time, therefore no assessment of risk from this source is provided.

3.3.1.8 Human Health Risk Characterization Uncertainty Analysis. General uncertainties attributed to the methodology used in this QRA are discussed in Section 2.6.4. Uncertainties inherent in the quality of the data used in the human health risk characterization are discussed in Section 2.6.2. Moderate uncertainty is associated with the historical data used to characterize this site. Exposure uncertainty for external exposure is considered high for the 1.8 to 4.6 m (6 to 15 ft) interval in the occasional-use scenario. High uncertainty for external exposure is associated with the frequent-use scenario in the 0 to 4.6 m (0 to 15 ft) interval because future land-use has not been identified and frequent-use does not currently occur at this site. General toxicity assessment uncertainty is discussed in table 2.6.4.2 and is considered moderate to high at this site. Table 4-1 summarizes data and exposure uncertainty.

3.3.1.9 Ecological Risk Characterization. The total calculated dose rates to the Great Basin pocket mouse from radionuclides in the burial ground soil are listed on Table 3-20 and summarized on Table 3-13. The total dose rate from radionuclides in soils 1.8 to 4.6 m (6 to 15 ft) does not exceed the EHQ (1 rad/day).

3.3.1.10 Ecological Risk Characterization Uncertainty Analysis. The uncertainty associated with the approach used in the qualitative ecological characterization is described in Section 2.5.6. Presently, the site is maintained free of vegetation, therefore leading to a reduced pocket mouse population. There is uncertainty about what vegetation would result if revegetation were allowed. The dose models assume that pocket mice are present and that a food source is growing. Therefore, the highest dose is used to assess qualitative risk, although the actual dose may be lower than this estimate. It is uncertain whether pocket mice would actually burrow to the depth of the waste or that plant roots would reach the waste since the contaminants are buried at soil depths > 1.8 m (6 ft).

3.3.2 118-B-2 Burial Ground

3.3.2.1 Site Description. The 118-B-2 burial ground is located 137 m (450 ft) east of the 105-B Reactor building, directly west of the 118-B-3 burial ground (Figure 1-2). The burial ground is approximately 18.3 by 9.1 m (60 by 30 ft) and 3 m (10 ft) deep, consisting of one trench trending east-west. The site was used to dispose of dry waste from the 107-B basin repair work and minor construction work from the 115-B gas building conversion. The site received waste between 1952 and 1956. An estimated 100 m^3 (3,531 ft^3) of waste was disposed to this facility. The estimated radionuclide inventory (Miller and Wahlen 1987) of cobalt-60 is 0.39 Ci, decayed through July 1993 (6 years, 30 days). There are no 100 Area source sites identified as analogous to the 118-B-2 burial ground.

3.3.2.2 Historical Data. There has been no historical data collected for this burial ground. The only process knowledge available is from Miller and Wahlen (1987) which identified only the presence of cobalt-60. This is uncertain, as other radioactive contaminants are probably present from the 107-B basin repair work.

3.3.2.3 Groundwater Impact. There are no B/C Area monitoring wells located downgradient from the 118-B-2 burial ground. Monitoring well 199-B4-4 is located upgradient from the burial ground.

3.3.2.4 LFI/QRA Results. No intrusive investigations were completed at the 118-B-2 burial ground as part of this LFI. Based on process knowledge, only cobalt-60 contamination is present, however, other radionuclides are probably present from wastes from the 107-B basin repair work. Although there is no monitoring well data available, it is unlikely that the 118-B-2 burial ground is impacting the groundwater as the facility received only dry wastes. Because no data are available for this site, no human health risk or ecological risk assessment was made.

3.3.3 118-B-3 Burial Ground

3.3.3.1 Site Description. The 118-B-3 burial ground is located approximately 200 m (650 ft) east of the 105-B Reactor building, directly east of the 118-B-2 burial ground (Figure 1-2). It is a east-west running trench 107 x 84 x 6.1 m deep (350 x 275 x 20 ft). The burial ground was active between 1956 and 1960, it received an estimated 5,000 m^3

(176,550 ft^3) of wastes from effluent line modification and reactor-generated solid wastes. The bulk of the waste consisted of cold-rolled steel pipe. Based on Miller and Wahlen (1987), the estimated radionuclide inventory is 0.39 Ci of cobalt-60, decayed to July 1993 (6 years, 30 days). There are no 100 Area source sites identified as analogous to the 118-B-3 burial ground.

3.3.3.2 Historical Data. There has been no historical data collected for this burial ground. Process knowledge presented by Miller and Wahlen (1987) indicate only cobalt-60 is present.

3.3.3.3 Groundwater Impact. Monitoring well 199-B4-8 is located downgradient of the 118-B-3 burial ground; well 199-B9-3 is located upgradient from the burial ground, but at a considerable distance (>400 m [1312 ft]) (Table 3-6). The downgradient well shows tritium, strontium-90 and technetium-99 contamination (Table 3-21). The upgradient well shows tritium and technetium-99 contamination at concentrations slightly higher than those in the downgradient well (Table 3-21). It is unlikely that the 118-B-3 burial ground is the source for the contamination shown in well B4-8. Several 100-BC-1 and 100-BC-2 Operable Unit source sites are possible down/cross gradient sources (Figure 1-2).

3.3.3.4 LFI Results. No intrusive investigations were completed at the 118-B-3 burial ground as part of the LFI. Based on process knowledge, the only radionuclide present is cobalt-60. It is unlikely that the burial ground is a source of groundwater contamination. Because no data are available for this site, no human health risk or ecological risk assessment was made.

3.3.4 118-B-4 Burial Ground

3.3.4.1 Site Description. The 118-B-4 burial ground is located approximately 91.4 m (300 ft) northeast of the 105-B Reactor building within the 105-B exclusion area fence. Because it is within the exclusion area fence, no permanent concrete marker posts were required. The burial ground is approximately 15.2 x 9.2 x 4.6 m deep (50 x 30 x 15 ft). It consists of six pits constructed of 1.8 m (6 ft) diameter metal culverts, buried vertically. The burial ground was utilized between 1956 and 1958 for the disposal of fuel spacers. Based on Miller and Wahlen (1987), the estimated radionuclide inventory is 0.39 Ci of cobalt-60, decayed to July 1993 (6 years, 30 days). There are no 100 Area source sites identified as analogous to the 118-B-4 burial ground.

3.3.4.2 Historical Data. There has been no historical data collected for this burial ground. Process knowledge presented in Miller and Wahlen (1987) indicate only cobalt-60 is present.

3.3.4.3 Groundwater Impact. Monitoring well 199-B4-1 is located downgradient of the 118-B-4 burial ground; well 199-B4-4 is located upgradient (Table 3-6). Tritium, strontium-90 and technetium-99 contamination was found in similar concentrations in both wells (Table 3-22). The semi-volatile organic (semi-VOL) bis(2-ethylhexyl)phthalate was found in well B4-1 (Table 3-22). Bis(2-ethylhexyl)phthalate was removed from the COPC list in the 100-BC-5 LFI (DOE-RL 1993b) as a laboratory contaminant. It is unlikely the 118-B-4 burial ground is a source of groundwater contamination.

9413273.3070

3.3.4.4 LFI Results. No intrusive investigations were completed at the 118-B-4 burial ground as part of the LFI. Based on process knowledge, the only radionuclide present is cobalt-60. There is no observable groundwater impact. Because no data are available for this site, no human health risk or ecological risk assessment was made.

3.3.5 118-B-6 Burial Ground

3.3.5.1 Site Description. The 118-B-6 burial ground is located approximately 107 m (350 ft) northeast of the 105-B Reactor building, just outside of the exclusion fence (Figure 1-2). It is approximately 12.2 x 12.2 x 6.1 m deep (40 x 40 x 20 ft) and consists of two 1.8 m (6 ft) diameter, 5.5 m (18 ft) long concrete pipes buried vertically, topped with light metal caps. Tritium wastes and tritium recovery wastes, primarily aluminum target cans and lead target melting pots, generated during the metal line operation of the tritium separation program, were disposed of in the burial ground. Based on Miller and Wahlen (1987), the estimated radionuclide inventory is 7804 Ci of tritium, decayed to July 1993 (6 years, 30 days). There are no 100 Area source sites identified as analogous to the 118-B-6 burial ground.

3.3.5.2 Historical Data. There has been no historical data collected for this burial ground. Process knowledge presented in Miller and Wahlen (1987) indicate only tritium is present.

3.3.5.3 Groundwater Impact. Monitoring well 199-B4-1 is located downgradient of the 118-B-6 burial ground; well 199-B4-4 is located upgradient (Table 3-6). Tritium, strontium-90 and technetium-99 contamination was found in similar concentrations in both wells (Table 3-22). The semi-VOL bis(2-ethylhexyl)phthalate was found in well B4-1 (Table 3-22). Bis(2-ethylhexyl)phthalate was removed from the COPC list in the 100-BC-5 LFI (DOE-RL 1993b) as a laboratory contaminant. It is unlikely the 118-B-6 burial ground is a source of groundwater contamination.

3.3.5.4 LFI Results. No intrusive investigations were completed at the 118-B-6 burial ground as part of the LFI. Based on process knowledge, the only radionuclide present is tritium. There is no observable groundwater impact.

3.3.5.6 Human Health Risk Characterization. No LFI soil sampling data, historical soil sampling data or analogous site data are available for this site. Therefore no assessment of human health risk was made.

3.3.5.7 Ecological Risk Characterization. No LFI or historical sampling data are available from this site, therefore no ecological risk characterization is provided.

3.3.6 118-C-1 Burial Ground

The 118-C-1 burial ground is located approximately 152.4 m (500 ft) southeast of the 105-C Reactor building (Figure 1-2). The site boundaries are permanently marked with concrete posts numbered C-70-1 through C-70-21. The burial ground is an east-west

trending trapezoid approximately 155.4 x 122 x 4.6 m deep (510 x 400 x 15 ft). The site consisted of many north-south trenches, typically 91 x 61 m (300 x 200 ft), and six 3.04 x 3.04 m (10 x 10 ft) pits.

The 118-C-1 burial ground was in service from the spring of 1953 to 1969 as the primary burial ground for 105-C Reactor operation wastes. It received an estimated waste volume of 10,000 m^3 (353,100 ft^3) including process tubes, aluminum spacers, control rods, soft waste and reactor hardware (DOE-RL 1993a).

Miller and Wahlen (1987) reports an estimated radionuclide inventory as follows:

Radionuclide	Quantity in curies (decayed through 7-1-93)
tritium	2.5
carbon-14	1.3
cobalt-60	91.2
nickel-59	1.3
nickel-63	167
strontium-90	0.2
cesium-137	0.3
europium-152	0.95
europium-154	0.05
barium-133	0.1
calcium-41	0.01
silver-108m	4.5

Estimates of metallic and other wastes for the 118-C-1 burial ground are (Miller and Wahlen 1987):

Material	Amount (Tons)
Aluminum[1]	94.8
Boron[2]	1.2
Graphite	0.56
Lead	23.8
Lead/Cadmium	105.9/4.4
Other[3]	211

[1] Includes aluminum cans on lead/cadmium pieces, spacers and aluminum contained in splines.
[2] Includes boron from splines, VSR and HCR.
[3] Includes soft waste, desiccant, and miscellaneous materials.

3.3.6.2 Geophysical Surveys. Surface based reconnaissance GPR and EMI surveys were completed at the 118-C-1 burial ground (Mitchell and Bergstrom 1993). Eleven areas, representing trenches, pits and other features were identified in the survey by areas of high anomaly concentration. Numerous other smaller features of unknown origin were also identified. Mitchell and Bergstrom (1993) present an interpretation map of the 118-C-1

burial ground showing the 11 zones and other detected features. The report also presents an estimated depth to detected features of 0.61 to 4.3 m (2 to 14 ft) based on GPR results.

The survey showed one zone of buried debris extending outside the permanent burial ground markers. This zone of shallow buried debris extends west of the western boundary. The character of the zone suggest that it could be construction debris, possibly left over from the demolition of one of the many structures that once occupied the area.

The geophysical methods used in the survey achieved a good definition of buried waste. Electro-magnetic induction was effective at locating concentrations of metallic debris possibly up to 5.5 m (18 ft) deep. Ground-penetrating radar was effective at locating objects between 0.3 and 4.3 m (1 and 14 ft) in depth.

3.3.6.3 Historical Data. There were no historical soil sampling data collected in the 118-C-1 burial ground. Process knowledge presented in Miller and Wahlen (1987) identified the following contaminants:

- radionuclides: tritium, carbon-14, cobalt-60, nickel-59, nickel-63, strontium-90, cesium-137, europium-152, europium-154, barium-133, calcium-41, and silver-108

- metals: aluminum, boron, graphite, lead, and lead/cadmium.

3.3.6.4 Analogous Sites. Burial grounds within the 100 Areas analogous to 118-C-1 are listed on Table 1-2. The analogous sites in 100 D/DR, 100 H, and 100 F Areas have not been investigated. The 118-B-1 burial ground has the same list of analogous sites; therefore, 118-B-1 may be analogous to 118-C-1. The results of the investigations on 118-B-1 are found in Section 3.3.1 of this LFI.

3.3.6.5 Groundwater Impact. Monitoring wells 199-B9-1, 199-B9-2 and 199-B9-3 are located downgradient of the 118-C-1 burial ground; there are no B/C Area monitoring wells upgradient of the burial ground (Table 3-6). The downgradient wells show consistent tritium, carbon-14 and technetium-99 contamination (Table 3-23). The 116-C-2 pluto crib system and 116-C-6 settling pond are located in between the burial ground and the monitoring wells; it is more likely these sites are the sources for the groundwater contamination. It does not appear that the 118-C-1 burial ground is impacting groundwater.

3.3.6.6 LFI Results. No intrusive investigations were completed at the 118-C-1 burial ground as part of this LFI. Surface based reconnaissance GPR and EMI surveys were completed to locate the heaviest concentration of buried debris. Based on the geophysical surveys, the overwhelming majority of the buried wastes were found within the permanent burial ground markers. The trench which continued outside the permanent markers probable contains construction debris from the demolition of one of the many structures that once occupied the area.

Based on analogous site comparison, there could be radionuclide contamination within the 118-C-1 burial ground soils. Migration of these contaminants within the subsurface is assumed to be limited. There is no observable groundwater impact.

3.3.6.7 Human Health Risk Characterization. This site is considered to be analogous to the 118-B-1 burial ground. Section 3.3.1.7 evaluates the human health risk at the 118-B-1 burial ground.

3.3.6.8 Human Health Risk Characterization Uncertainty Analysis. This site is considered to be analogous to the 118-B-1 burial ground. Section 3.3.1.8 evaluates the human health risk characterization uncertainty at the 118-B-1 burial ground. Uncertainty associated with the data and exposure may be amplified since no local data exists, all data comes from analogous sites.

3.3.6.9 Ecological Risk Characterization. This site is considered to be analogous to the 118-B-1 burial ground. Section 3.3.1.9 evaluates the ecological risk at the 118-B-1 burial ground.

3.3.6.10 Ecological Risk Characterization Uncertainty Analysis. See Section 3.3.1.10 for ecological risk characterization uncertainty analysis for the 118-B-1 burial ground.

3.3.7 118-C-2 Ball Storage Tank

3.3.7.1 Site Description. The 118-C-2 ball storage tank is a 1.8 m (6 ft) diameter by 1.5 m (5 ft) deep underground storage tank of unknown construction located northeast of the C Reactor building (Figure 1-2). Two visible standpipes mark the tank's location. The tank was used to store approximately 9,070 kg (10 tons) of highly irradiated boron steel and carbon steel balls used to test a "hot" ball sorter prototype during the ball 3X project.

Miller and Whalen (1987) report the estimated radionuclide inventory as follows:

Radionuclide	Quantity in curies (decayed through 7-1-93)
cobalt-60	36
nickel-63	1.5

There are no 100 Area source sites identified as analogous to the 118-C-2 ball storage tank.

3.3.7.2 Historical Data. There has been no historical data collected the 118-C-2 ball storage tank. Process knowledge presented in Miller and Wahlen (1987) indicate that cobalt-60 and nickel-63 are present.

3.3.7.3 Groundwater Impact. There are no monitoring wells downgradient from the 118-C-2 ball storage tank close enough to be useful in determining the impact it has on groundwater. Monitoring well 199-B4-5 is the closest well, however; it is over 200 m

(656 ft) away and there are numerous other possible source sites (Table 3-6). There are no B/C Area monitoring wells located upgradient of the storage tank.

3.3.7.4 LFI Results. No intrusive investigations were completed at the 118-C-2 ball storage tank as part of the LFI. Based on process knowledge, the storage tank contains boron steel and carbon steel balls contaminated with cobalt-60 and nickel-63. Although there are no monitoring well data available; based on facility use, it is unlikely that the 118-C-2 ball storage tank is impacting the groundwater. Because no data are available for this site, no human health risk or ecological risk assessment was made.

3.3.8 118-C-4 Horizontal Control Rod Storage Cave

3.3.8.1 Site Description. The 118-C-4 horizontal control rod storage cave is a 12.2 x 7.6 m (40 x 25 ft) concrete tunnel covered with a 1.2 m (4 ft) thick mound of dirt located south of the C Reactor building (Figure 1-2). It was originally used to store contaminated horizontal control rods for radioactive decay. It is currently suspected to contain miscellaneous reactor facility components (DOE-RL 1991b). Based on Miller and Wahlen (1987), the estimated radionuclide inventory is 0.39 Ci of cobalt-60, decayed through July 1993 (6 years, 30 days). The radiation reading at the entrance to the tunnel is 5 mrem/hr (DOE-RL 1991b). Sites within the 100 Areas which are analogous to the 118-C-4 horizontal control rod storage cave are listed on Table 1-2. However, there have not been any investigations completed on analogous sites.

3.3.8.2 Historical Data. There has been no historical data collected for this burial ground. Process knowledge presented in Miller and Wahlen (1987) indicate only cobalt-60 is present. This is uncertain as the contents of the cave are undocumented: other radioactive contaminants may be present.

3.3.8.3 Groundwater Impact. There are no monitoring wells downgradient from the 118-C-4 horizontal control rod storage cave close enough to be useful in determining the impact it has on groundwater. Monitoring well 199-B4-5 is the closest well, however; it is over 400 m (1,312 ft) away and there are numerous other possible source sites (Table 3-6). There are no B/C Area monitoring wells located upgradient of the storage cave.

3.3.8.4 LFI Results. No intrusive investigations were completed at the 118-C-4 horizontal control rod storage cave as part of the LFI. Based on process knowledge, the storage cave contains only cobalt-60. The contents of the cave are not known, therefore other contamination may exist. The radiation reading at the cave's entrance is 5 mrem/hr (DOE-RL 1991b). Although there is no monitoring well data available, it is unlikely that the 118-C-4 horizontal control rod storage cave is impacting the groundwater. Because no data are available, no human health risk or ecological risk assessment was made.

3.3.9 128-C-1 Burning Pit

3.3.9.1 Site Description. The 128-C-1 burn pit is located due east of the 105-C Reactor building between the protected area fence and the 105-C Area perimeter road (Figure 1-2). It is approximately 68.6 x 38.1 m (225 x 125 ft) with broken glass and ash marking the area. The pit was used to dispose of combustible materials (vegetation, office wastes, paint waste, chemical solvents), hardware and noncontaminated miscellaneous equipment (DOE-RL 1991b). Sites within the 100 Areas which are analogous to the 128-C-1 burn pit are listed on Table 1-2. However, there have not been any investigations completed on the analogous burn pits.

3.3.9.2 Historical Data. There has been no historical data collected for the 128-C-1 burn pit. There is no process knowledge or waste inventories available.

3.3.9.3 Groundwater Impact. There are no B/C Area monitoring wells located up or downgradient from the 128-C-1 burn pit.

3.3.9.4 LFI Results. No intrusive investigations were completed at the 128-C-1 burn pit as part of this LFI. The pit was used to dispose of combustible materials, including paint waste and chemical solvents, hardware and noncontaminated equipment. The paint waste and chemical solvents could possibly have contaminated the soils in the burn pit. Although there are no monitoring well data available, it is unlikely that the 128-C-1 burn pit is impacting the groundwater. Because no data are available, no human health risk or ecological risk assessment was made.

3.3.10 132-C-1 Reactor Exhaust Stack Burial Site

3.3.10.1 Site Description. The 132-C-1 reactor exhaust stack was a 61 m (200 ft) high by 5.1 m (16.6 ft) base diameter exhaust stack constructed of reinforced concrete (Figure 1-2). It received exhaust air from the C Reactor building prior to the completion of an exhaust air filter building in 1960, and from the 132-C-3 exhaust air filter building after 1960. In 1985 the stack was demolished and buried on site in a 9.1 x 61 x 5.5 m (30 x 200 x 18 ft) trench. The total radionuclide inventory in the buried rubble was estimated by Beckstrom (1986) to be 2.8 mCi. Sites within the 100 Areas which are analogous to the 132-C-1 reactor exhaust stack are listed on Table 1-2. However, there have not been any investigations completed on the analogous exhaust stacks.

3.3.10.2 Historical Data. Dorian and Richards (1978) took standard smear samples of the stack inlet. Analysis of these samples showed detectable concentrations of the following radionuclides: cobalt-60, strontium-90, cesium-137, europium-154, plutonium-238, and plutonium-239/240.

Concrete core samples were taken from the interior surface of the stack prior to demolition (Beckstrom 1986). Analysis of these samples showed radiation contamination penetrated the interior surface of the concrete to a depth of 0.6 cm (0.25 in). Based on the results from these samples, the total radionuclide inventory was estimated to be 2.8 mCi. An

allowable residual contamination level (ARCL) value of 49.4 pCi/g was calculated, based on the detected contamination, for the buried rubble of the reactor stack.

3.3.10.3 Groundwater Impact. There are no monitoring wells downgradient from the 132-C-1 reactor exhaust stack burial ground close enough to be useful in determining the impact it has on groundwater. Monitoring well 199-B4-5 is the closest downgradient well, however; it is over 400 m (1,312 ft) away and there are numerous other possible source sites (Table 3-6). There are no B/C Area monitoring wells located upgradient of the exhaust stack burial ground.

3.3.10.4 LFI Results. No intrusive investigations were completed as part of this LFI. Based on the results of samples of the exhaust stack taken before demolition, the radionuclide contamination is limited to a small percentage of the concrete rubble in the burial site. Although there are no monitoring well data available, it is unlikely that the 132-C-1 reactor exhaust stack burial ground is impacting the groundwater. Potential human health risks and risk uncertainties associated with the stack burial site have been addressed using the parameters of the residential/construction scenario developed by the U. S. Nuclear Regulatory Commission as part of 10 Code of Federal Regulations Part 61 (Beckstrom 1986). Based on this calculation the 132-C-1 stack burial site was released for unrestricted use and no further action was required (Beckstrom 1986). Based on the above considerations, no human health evaluation is provided. Because no sampling data are available, no ecological risk assessment was made.

9413293.0077

3.3.11 132-C-3 Exhaust Air Filter Building Burial Site

3.3.11.1 Site Description. The 132-C-3 exhaust air filter building (Figure 1-2) housed the particulate and activated charcoal filters and the air flow control systems for the C Reactor. Reactor exhaust gasses passed through these filters before being discharged through the 132-C-1 reactor exhaust stack.

The filter building was a concrete, mostly subsurface, structure 18 x 11.9 x 10.7 m high (59 x 39 x 35 ft) housing two identical filter cells. Only 2.4 m (8 ft) of it was above grade. The 132-C-3 building was built around 1960, partially demolished in 1984, completely demolished in 1988 and buried in place. It was decontaminated before demolition. The total radionuclide inventory of the filter building rubble was estimated to be 0.84 mCi (Beckstrom 1985).

3.3.11.2 Historical Data. Dorian and Richards (1978) took standard smear samples from the filter cells within the 132-C-3 filter building. Analysis of these samples showed detectable concentrations of the following radionuclides: tritium, carbon-14, cobalt-60, strontium-90, cesium-134, cesium-137, europium-154, plutonium-238, and plutonium-239/240.

Paint and concrete core samples were taken from the inlet and outlet ducts of the filter building prior to demolition (Beckstrom 1985). Based on the results from these samples, the total radionuclide inventory was estimated to be 0.84 mCi. Allowable residual

contamination level values were calculated using three different methods yielding the following results: Method I - 8.48 pCi/g; Method II - 9.27 pCi/g; and Method III - 10.5 pCi/g (Beckstrom 1985).

3.3.11.3 Analogous Sites. The 132-B-4 filter building burial site (100-BC-1 Operable Unit), and the 117-D filter building burial site (100-DR-1 Operable Unit) are the sites analogous to the 132-C-3 exhaust air filter building burial site for which data are available. Both facilities have been demolished and buried in place. The 100-BC-1 LFI report (DOE-RL 1993d) discusses the 132-B-4 facility. The 100-DR-1 LFI report (DOE-RL 1994c) discusses the 117-D facility. Similar contaminants are found in all three facilities.

3.3.11.4 Groundwater Impact. There are no monitoring wells downgradient from the 132-C-3 exhaust air filter building burial ground close enough to be useful in determining the impact it has on groundwater. Monitoring well 199-B4-5 is the closest downgradient well, however; it is over 400 m (1,312 ft) away and there are numerous other possible source sites (Table 3-6). There are no B/C Area monitoring wells located upgradient of the filter building burial ground.

3.3.11.5 LFI Results. No intrusive investigations were completed as part of this LFI. Based on the results of samples of the filter building inlet and outlet ducts, radionuclide contamination is minimal. Although there is no monitoring well data available, it is unlikely that the 132-C-3 exhaust air filter building burial ground is impacting the groundwater. Potential human health risks and risk uncertainties associated with the building burial site have been addressed using the same approach used for the 132-C-1 reactor stack burial site (Beckstrom 1985). Demolition of the building was approved based, in part, on this analysis (Beckstrom 1985). Based on the above considerations, no human health evaluation is provided. Because no sampling data are available, no ecological risk assessment was made.

9413293.3078

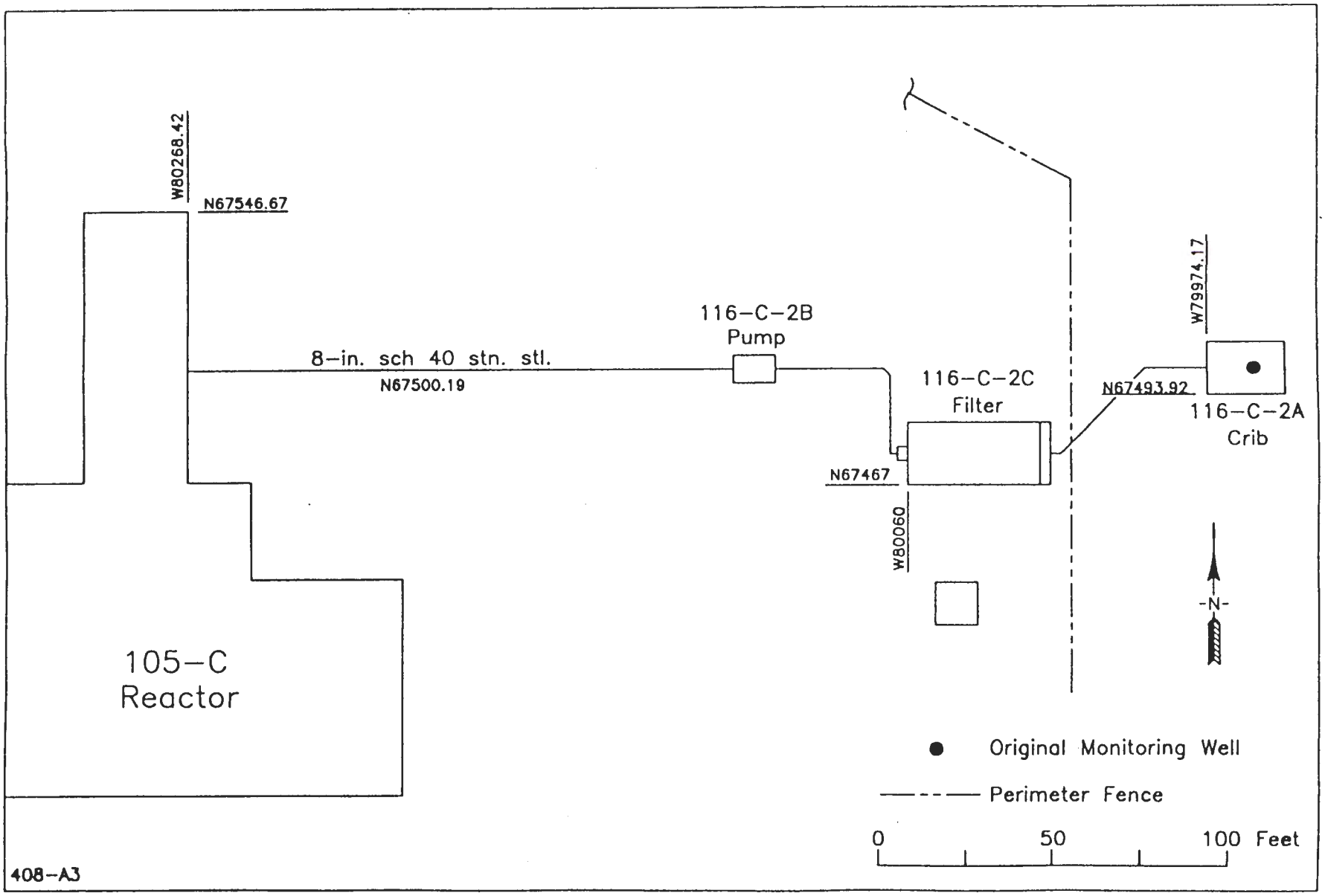

Figure 3-1 Map View of the 116-C-2 Pluto Crib System

Figure 3-2 Cross-Section View of the 116-C-2 Pluto Crib System

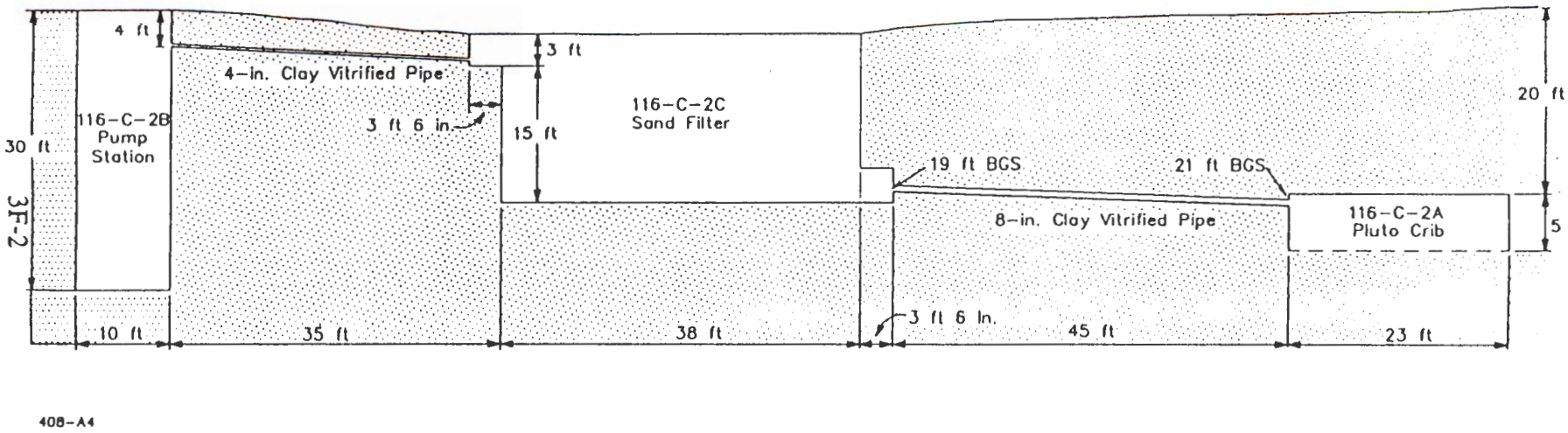

Figure 3-3 Schematic of the 116-C-2A Pluto Crib

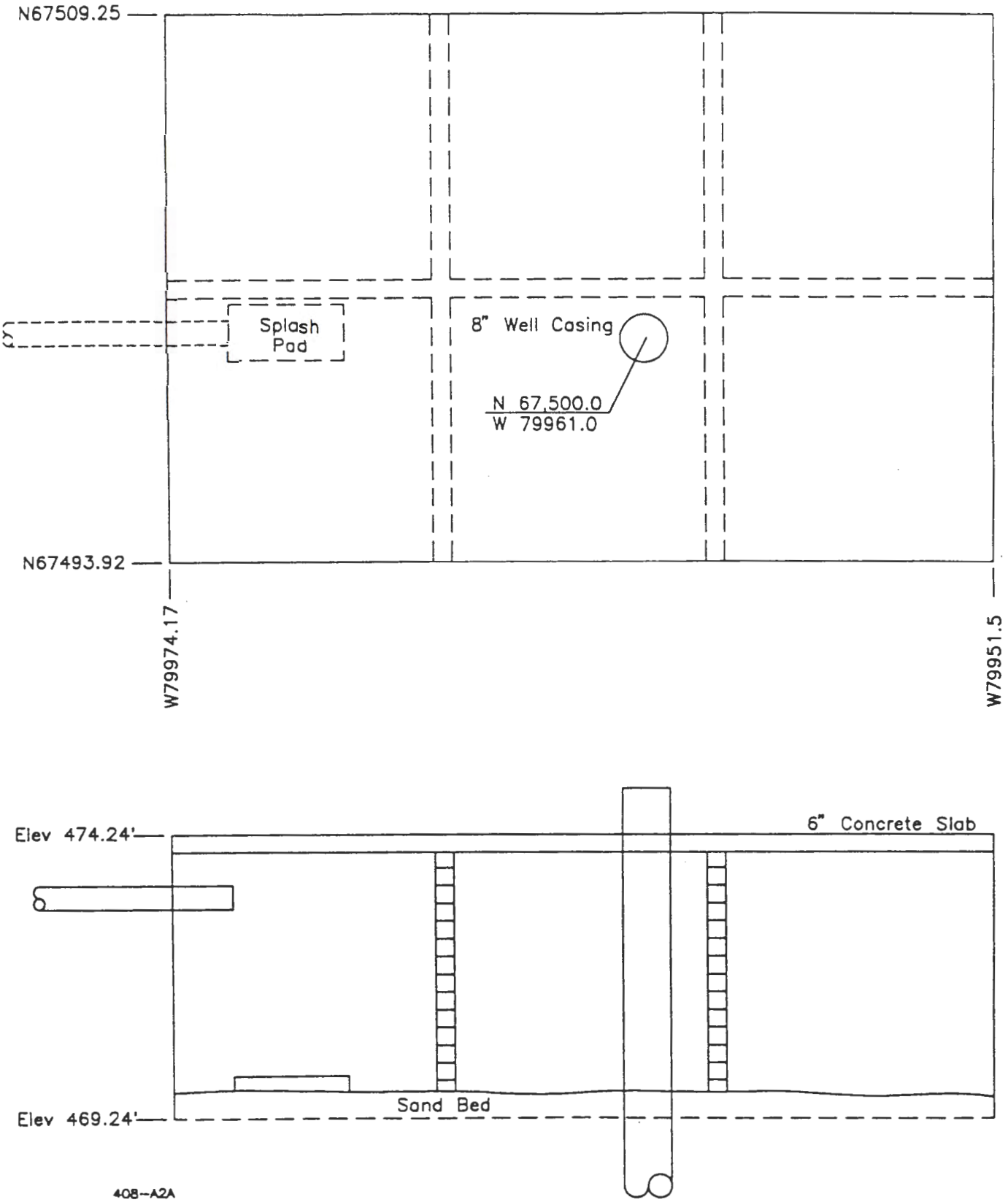

Figure 3-4 Summary Diagrams of the 199-B9-4 Borehole Data

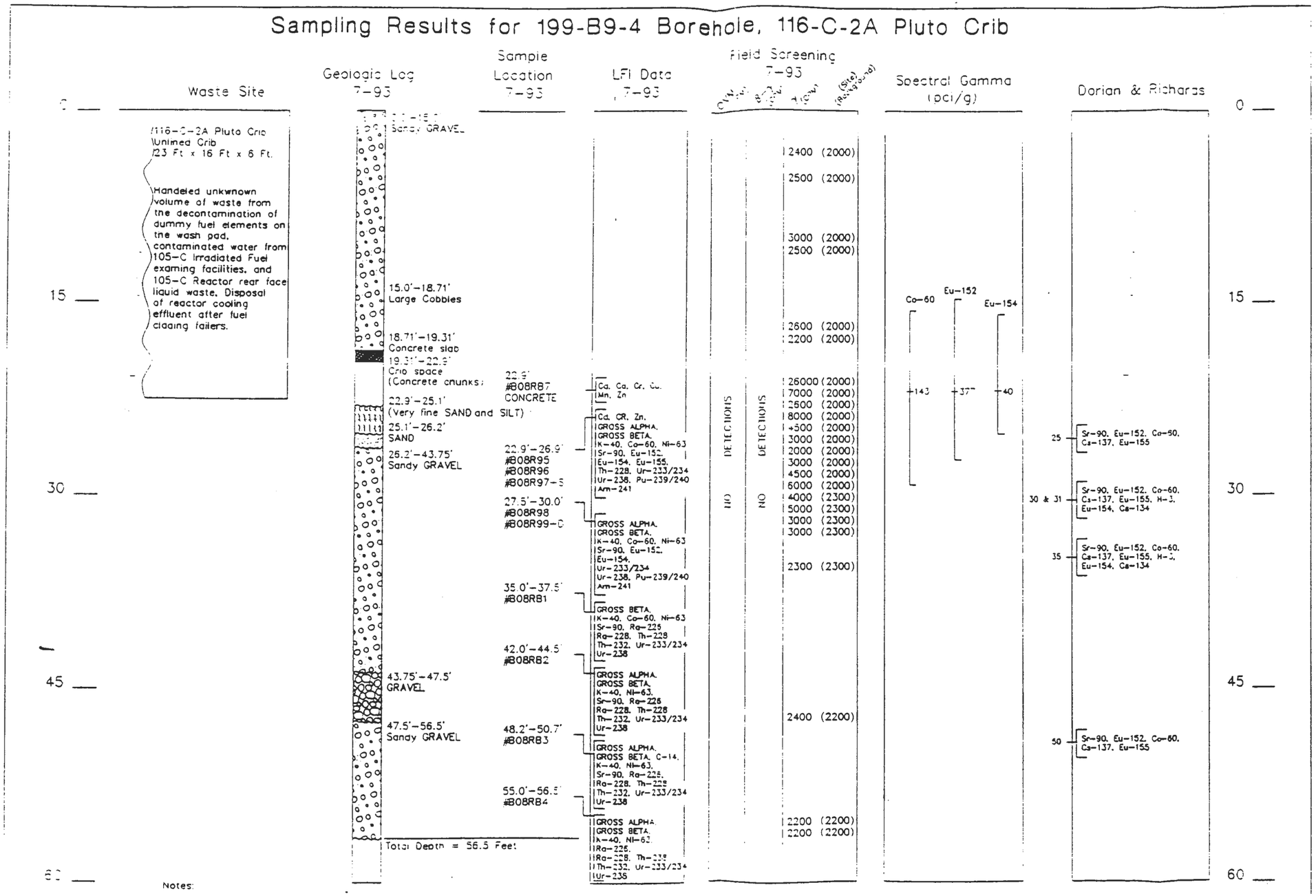

Notes:

LFI Data – Analytical lab results for all inorganic constituents greater than 95% upper threshold limits and all detected radionuclides are shown

Field Screening – Action levels for volatile organic compounds (VOC) was 500ppm above background and for gross Gamma (γ) radiation was site background plus area background (2600 cpm due to proximity of C Reactor

1978 Radiochemical Data – All detected radionuclides at the corresponding depth intervals are shown

Field screening values greater than non-detect or background (shown in parenthesis) are recorded in this figure. All samples were field screened.

[illegible] 500 ppm

9413293.3082

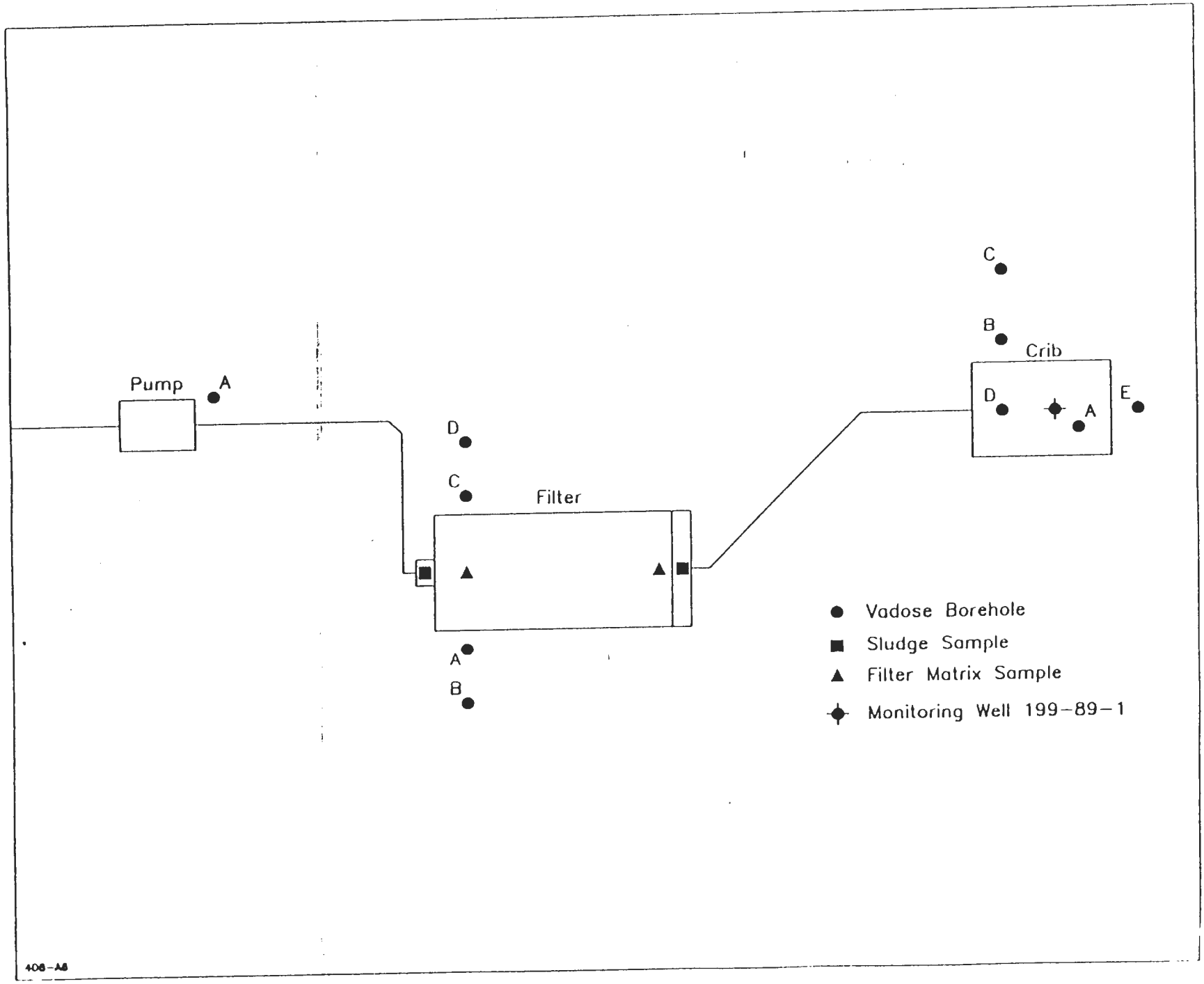

Figure 3-5 Schematic of the 116-C-2 Pluto Crib System Showing Approximate Locations of Dorian and Richards 1978 Testholes

Figure 3-6 Schematic of the 116-C-2B Pluto Crib Pump Station

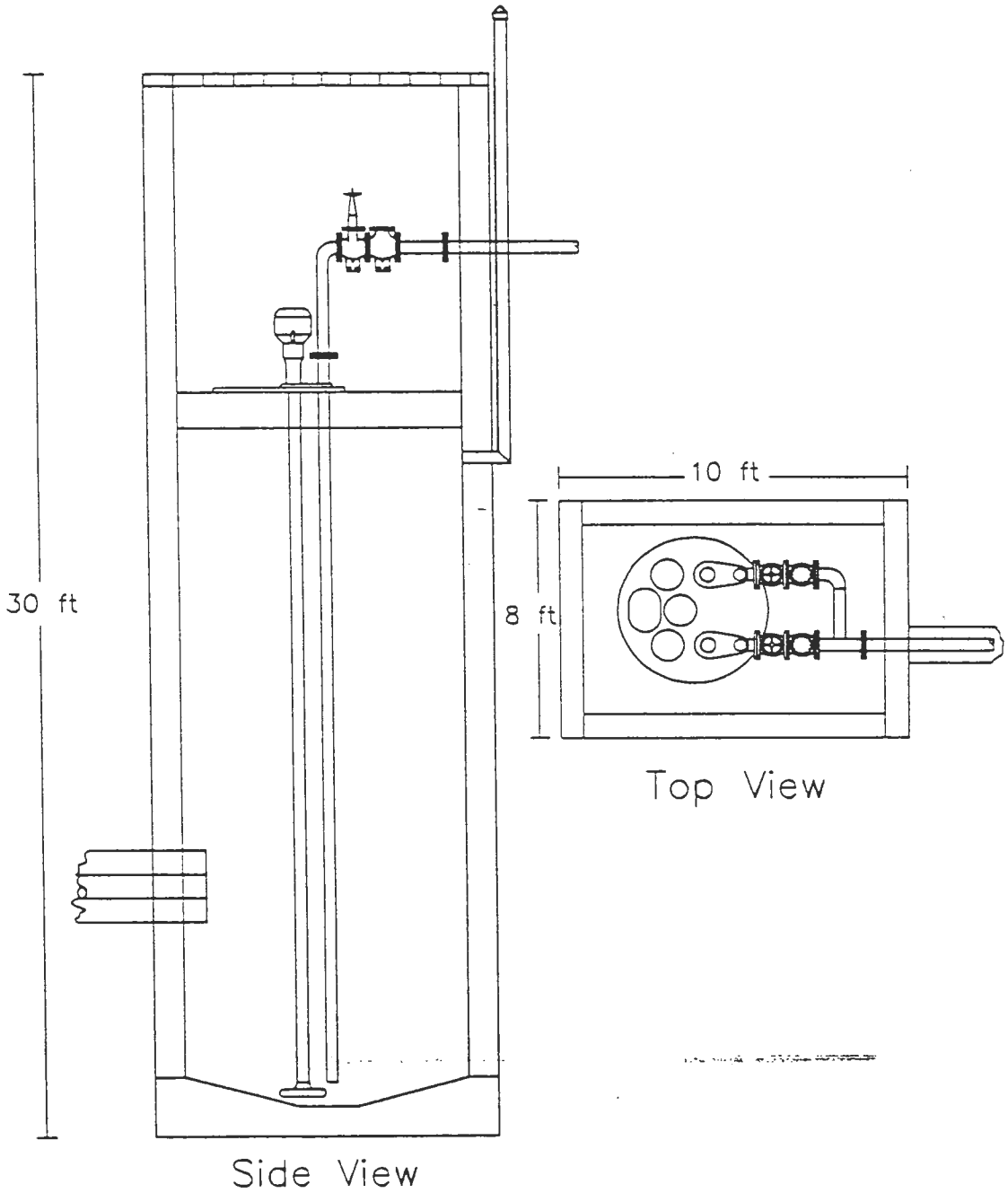

406—A7

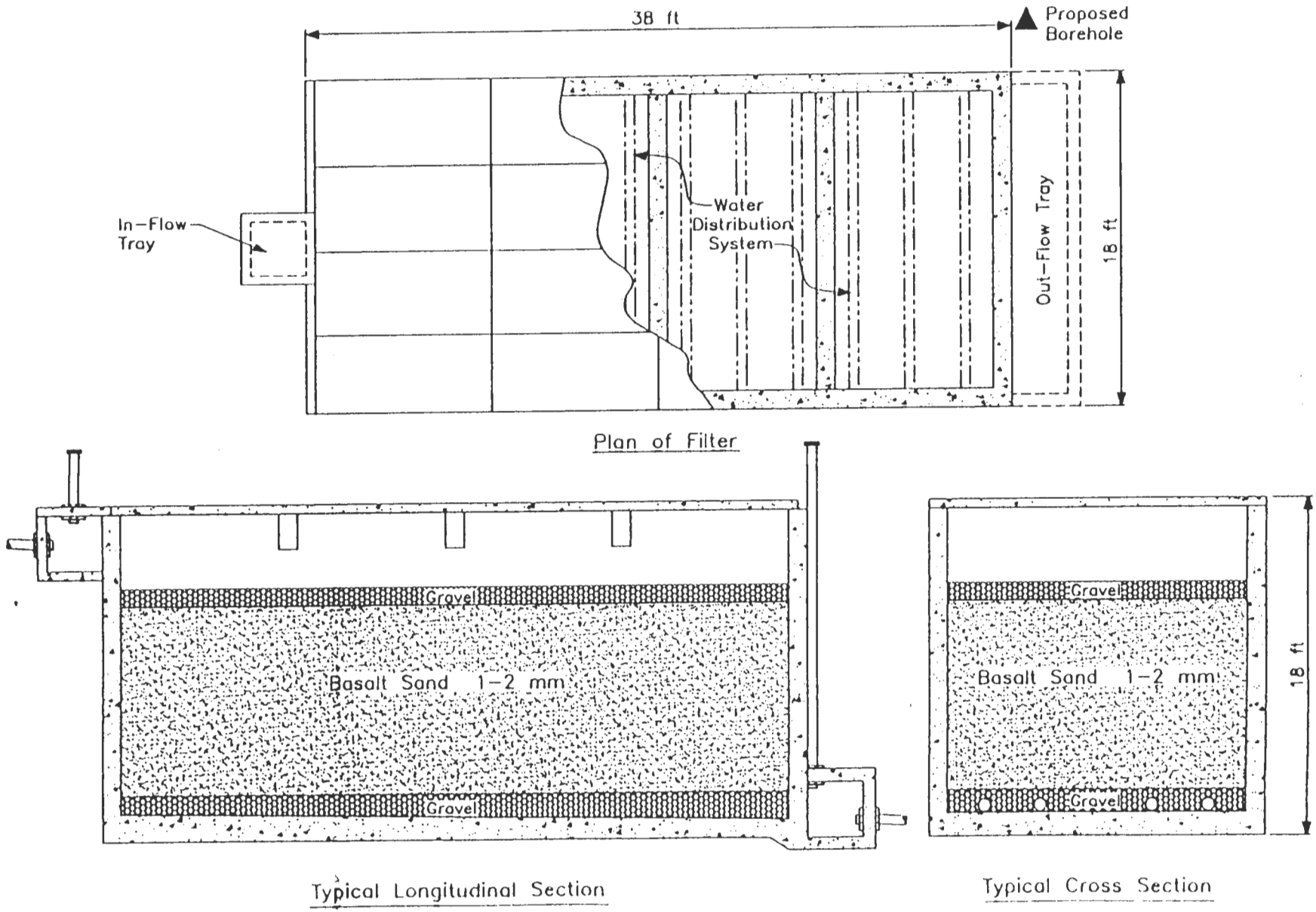

Figure 3-7 Schematic of the 116-C-2C Pluto Crib Sand Filter

Figure 3-8 Relationship between the Dorian and Richards 118-B-1 Burial Ground Testholes and the Waste Trenches

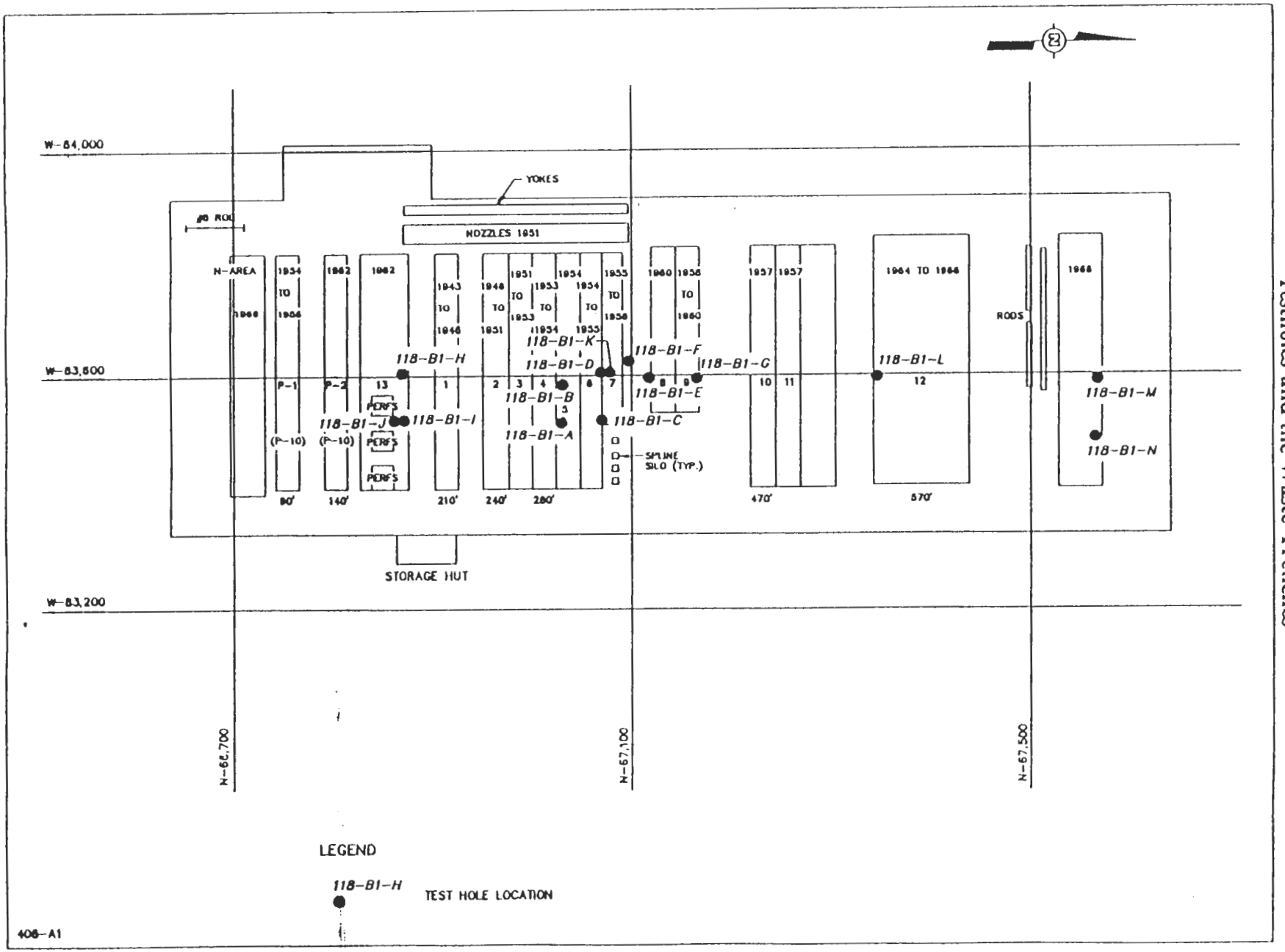

Table 3-1 Summary of Analytical Results for Nonwaste Site Samples: 100-BC-1 and 100-BC-2 Operable Unit LFI (Page 1 of 2)

Sample No.	B08RB5	B08RB6	B05XZ4	B05XZ5	95%
Depth (ft)	0	0	0	0	UTL[1]
	BC-2	BC-2	BC-1(a)	BC-1(a)	
Inorganics (mg/kg)					
Aluminum	7930	7510	6640	6860	15600
Antimony	U	U	U	U	15.7[2]
Arsenic	2.5 S	2.8	2.2	2.8	8.92
Barium	73.6	70	71	77.2	171
Beryllium	0.25 B	0.29 B	0.24	0.23	1.77
Cadmium	U	U	0.46	U	0.66[2]
Calcium	5860	5980	3300	3760	23920
Chromium	12.7	11.4	8	8.9	27.9
Cobalt	8 B	8 B	8.2	7.6	19.6
Copper	U	U	11.2	13.1	28.2
Iron	16900	16600	14900	14300	39160
Lead	5.1	5.2	4.8	4.4	14.75
Magnesium	4330	4410	3610	3860	8760
Manganese	288 *	284 *	296	286	612
Mercury	U	U	U	U	1.25
Nickel	11.6	10.8	8.3	9.8	25.3
Potassium	1670	1670	1490	1570	3120
Silver	U	U	U	U	2.7
Sodium	U	U	129	130	12.9
Vanadium	35.4 *	33.8 *	30	27.7	111
Zinc	35.3 EJ	35.1 EJ	39.6	36.6	79
Radionuclides (pCi/g)					
Gross Alpha	8.7 J(R)	12 (R)	U	U	NR
Gross Beta	18 (R)	13 (R)	10.6	7.82	NR
C-14	U	U	2.49	2.48	NR
Na-22	NA	NA	NA	NA	NR
K-40	15 (R)	13 (R)	13.56 J	13.85 J	NR
Co-58	U	U	NA	NA	NR
Co-60	U	U	U	U	NR
Ni-63	5.4(R)(J)	4.6(R)(J)	NA	NA	NR
Sr-90	U	U	0.209	U	NR
Eu-152	U	U	NA	NA	NR
Eu-154	U	U	NA	NA	NR
Eu-155	U	U	NA	NA	NR
Ra-226	0.68 (R)	0.71 (R)	0.5253 J	0.8203 J	NR
Ra-228	0.93 (R)	1.1 (R)	NA	NA	NR
Th-228	0.88 (R)	1.3 (R)	0.6502 J	1.179 J	NR
Th-232	0.93 (R)	1.1 (R)	1.3 J	0.8674 J	NR
U-233/234	0.48(R)(J)	0.49(R)(J)	0.589 J	0.621 J	NR
U-235	U	U	0.0255	0.0202 R	NR
U-238	0.58(R)(J)	0.5(R)(J)	0.634 J	0.621 J	NR
Pu-239/240	U	U	0.00431	0.0067	NR
Am-241	U	U	0.0118	U	NR

9413293.3087

Table 3-1 Summary of Analytical Results for Nonwaste Site Samples: 100-BC-1 and 100-BC-2 Operable Unit LFI (Page 2 of 2)

Sample No. Depth (ft)	B08RB5 0	B08RB6 0	B05XZ4 0	B05XZ5 0	95% UTL[1]
Wet Chemistry & Anions (mg/kg)					
Sulfate	U	U	32	32	1320
N02/N03	U	U	5.09	4.19	199[3]

NA: Not Analyzed for
NR: Not reported
U: Undetected
J: Estimated Value
B: Detected below contract required detection limit
*: Duplicate analysis not within control limits
S: Determined by the method of standard additions
E: Estimated value
R: Rejected value
(J): Estimated value, qualifed be validators for admistrative reasons due to incomplete paperwork transfer, revalidation of data underway
(R): Rejected by validators for administrative reasons due to incomplete paperwork transfer, used per Westinghouse Hanford Co. instructions, revalidation of data underway
(a): After 100-BC-1 LFI (DOE-RL 1993d)
[1]: 95% confidence limit of the 95th percentile of the data distribution
[2]: Limit of detection
[3]: Value reported for nitrate only

9413293.3088

Table 3-2 Summary of Analytical Results for the 199-B9-4 Borehole: 116-C-2A Pluto Crib (Page 1 of 2)

Sample No.	B08R95	B08R96	B08R97	B08R98	B08R99	B08RB1	B08RB2	B08RB3	B08RB4	B08RB0
Depth (ft)	22.9-26.9	22.9-26.9	22.9-26.9 Split	27.5-30	27.5-30 Duplicate	35-37	42-44	48.2-50.7	55-57	Equipment Blank
Wet Chemistry & Anions (mg/kg)										
Sulfate	NA	U	12.9	U	20	U	22	20	U	24
N02/N03	NA	U	1.9	4.23	4.72	U	3.31	2.48	3.08	U
Inorganics (mg/kg)										
Aluminum	NA	6130J	3240J	5070	4430	4490	4990	4460	4090	206
Antimony	NA	U	U	U	U	U	U	U	U	U
Arsenic	NA	2.4	1.6	1.7B	1.6B	1.6B	1.2B	1.3B	0.89B	U
Barium	NA	74.7	84.4	52.3	76.1	52.8	59.3	50	50.4	4.6 B
Beryllium	NA	0.27B	U	0.28B	0.3B	0.31B	0.26B	0.24B	0.26B	U
Cadmium	NA	2.2	2.1	U	U	U	U	U	U	U
Calcium	NA	9400J	6150J*	6920	7210	7020	6690	6090	6210	U
Chromium	NA	235	220	15	14.9	6.3	7.2	4.9	5.5	U
Cobalt	NA	6.6B	4.1B	13.5	13	14.2	13.3	11.5	12.8	U
Copper	NA	U	7	U	U	U	U	U	U	U
Iron	NA	14200J	7520J	26200	25600	27900	26600	23000	25200	417
Lead	NA	4	4.1JNS	3.3S	3.5	2.9	2.1	3	2.7	U
Magnesium	NA	4530J	2240J	4590	4110	4780	4530	4160	3970	U
Manganese	NA	347*	261	309 *	308*	311*	361*	282 *	297*	5.8 *
Mercury	NA	U	U	U	U	U	U	U	0.05B	U
Nickel	NA	17	11.7	6.9B	7.3B	6.6B	7.8B	7.7B	6.3B	U
Potassium	NA	989	606	634B	620B	589B	659B	665B	517B	U
Silver	NA	U	U	U	U	1.1B	0.94B	0.97B	U	U
Sodium	NA	U	106B	U	U	U	U	U	U	U
Vanadium	NA	29.5*	10.6	63.3 *	58.2*	59.1*	56 *	35.8*	59*	0.59 B*
Zinc	NA	188EJ	162JN*	45.1EJ	41.9EJ	41.5EJ	41EJ	32.7EJ	40.1EJ	U

Table 3-2 Summary of Analytical Results for the 199-B9-4 Borehole: 116-C-2A Pluto Crib (Page 2 of 2)

Sample No.	B08R95	B08R96	B08R97	B08R98	B08R99	B08RB1	B08RB2	B08RB3	B08RB4	B08RB0
Depth (ft)	22.9-26.9	22.9-26.9	22.9-26.9 Split	27.5-30	27.5-30 Duplicate	35-37	42-44	48.2-50.7	55-57	Equipment Blank
Radionuclides (pCi/g)										
Gross Alpha	14 (R)	19(R)	44(J)	3.4(R)J	23(R)	U	5J(R)	4.2J(R)	6.4J(R)	4.6 J(R)
Gross Beta	850 (R)	230(R)	310(J)	400(R)	660(R)	230(R)	67(R)	42(R)	15(R)	9.4 J(R)
C-14	U	U	U	U	U	U	U	63(R)(J)	U	U
Na-22	NA	NA	5.46(J)	NA	NA	NA	NA	NA	NA	NA
K-40	U	17(R)	13.8(R)(J)	20(R)	23(R)	8.2(R)	8.4(R)	6(R)	7.5(R)	6.1 (R)
Co-58	U	U	0.673(R)(J)	U	U	U	U	U	U	U
Co-60	210 (R)	38(R)	43(R)(J)	47(R)	52(R)	0.096(R)	U	U	U	U
Ni-63	5500(R)(J)	3000(R)(J)	3200J	1900(R)(J)	2200(R)(J)	33(R)(J)	12(R)(J)	5.9(R)(J)	4.8(R)(J)	U
Sr-90	36 (R)(J)	29(R)(J)	29J	48(R)(J)	49(R)(J)	92(R)(J)	27(R)(J)	15(R)(J)	U	U
Eu-152	690 (R)	160(R)	143(R)(J)	160(R)	160(R)	0.24(R)	U	U	U	U
Eu-154	73 (R)	U	22.1(R)(J)	15(R)	20(R)	U	U	U	U	U
Eu-155	4.9 (R)	U	U	U	U	U	U	U	U	U
Ra-226	U	U	U	U	U	0.33(R)	0.33(R)	0.16(R)	0.36(R)	0.17 (R)
Ra-228	U	U	NA	U	U	0.49(R)	0.6(R)	0.47(R)	0.52(R)	0.34 (R)
Th-228	U	0.93(R)	U	U	U	0.48(R)	0.42(R)	0.34(R)	0.59(R)	0.21 (R)
Th-232	U	U	NA	U	U	0.49(R)	0.6(R)	0.47(R)	0.52(R)	0.34 (R)
U-233/234	0.44(R)(J)	0.14(R)(J)	NA	0.47(R)(J)	0.57(R)(J)	0.54(R)(J)	0.32(R)(J)	0.39(R)(J)	0.35(R)(J)	0.21 J(R)
U-235	U	U	0.0066(R)J	U	U	U	U	U	U	U
U-238	0.41(R)(J)	0.46(R)(J)	0.12(R)J	0.43(R)(J)	0.34(R)(J)	0.43(R)(J)	0.47(R)(J)	0.49(R)(J)	0.52(R)(J)	0.24 J(R)
Pu-239/240	0.074(R)(J)	0.035J(R)	0.003(R)(J)[1	0.014J(R)	0.023J(R)	U	U	U	U	U
Am-241	0.91(R)(J)	0.17(R)(J)	0.43(R)J	U	0.32(R)(J)	U	U	U	U	U

NA: Not Analyzed for
U: Undetected
J: Estimated Value
N: Spiked sample recovery not within control limits
B: Detected below contract required detection limit
*: Duplicate analysis not within control limits
S: Determined by the method of standard additions
E: Estimated value
R: Rejected value
(J): Estimated value, qualifed be validators for admistrative reasons due to imcomplete paperwork transfer, revalidation of data underway
(R): Rejected by validators for administrative reasons due to incomplete paperwork transfer, used per Westinghouse Hanford Company instructions, revalidation of data underway
[1]: Value reported for Plutonium-239 only

Table 3-3 Summary of Analytical Results for the Concrete Sample from the 199-B9-4 Borehole: 116-C-2A Pluto Crib

Sample No. Depth (ft)	B08RB7 22.9-26.9 Concrete	95% UTL[1]
Wet Chemistry & Anions (mg/kg)		
Sulfate	NA	1320
N02/N03	NA	199[2]
Inorganics (mg/kg)		
Aluminum	14200	15600
Antimony	4.6NBJ	15.7[3]
Arsenic	5.3	8.92
Barium	118	171
Beryllium	0.84B	1.77
Cadmium	3.2	0.66[3]
Calcium	46600	23920
Chromium	629	27.9
Cobalt	12.5	19.6
Copper	29.3	28.2
Iron	19600	39160
Lead	6.6	14.75
Magnesium	4550	8760
Manganese	661*	612
Mercury	0.07B	1.25
Nickel	21.3	25.3
Potassium	1130	3120
Silver	U	2.7
Sodium	U	1290
Vanadium	48.3*	111
Zinc	198EJ	79

NA: Not Analyzed
U: Undetected
J: Estimated Value
N: Spiked sample recovery not within control limits
B: Detected below contract required detection limit
*: Duplicate analysis not within control limits
[1]: 95% confidence limit of the 95th percentile of the data distribution
[2]: Value reported for nitrate only
[3]: Limit of detection

9413293.3091

Table 3-4 Summary of Radionuclide Analytical Results for the Dorian and Richards (1978) Testholes: 116-C-2A Pluto Crib (Decayed to July 1993)

Test Hole	A	B			C	D			E
Sample		31 ft	35 ft	50 ft		25 ft	30 ft	35 ft	35ft
Radionuclide (pCi/g)									
Tritium	NR	NA	2.6	NA	NR	NA	8.7	NA	49
Cobalt-60	NR	0.17	0.21	0.019	NR	0.82	1.4	0.23	0.11
Strontium-90	NR	72	72	25	NR	9.9	150	110	110
Cesium-134	NR	NA	NA	NA	NR	*	<0.001	<0.001	NA
Cesium-137	NR	0.074	0.094	0.0046	NR	0.1	0.87	0.046	0.0057
Europium-152	NR	0.19	0.46	*	NR	0.58	2.2	0.5	0.26
Europium-154	NR	*	0.11	*	NR	*	0.069	*	NA
Europium-155	NR	0.19	0.16	0.099	NR	0.0085	0.2	0.17	0.18
Total Uranium	NR	NA	0.11nd	NA	NR	NA	NA	NA	NA

*: Below detection limit

NA: Not analyzed for

nd: Isotope activity not decayed, isotope half-life large enough no significant change in activity has occured

NR: Not reported

Table 3-5 Analogous Site Comparison for 116-C-2A Pluto Crib System (Page 1 of 2)

Maximum Concentration	116-C-2A	116-F-4	116-B-3	116-D-2A	95% UTL (c)
INORGANICS (a)	mg/kg	mg/kg	mg/kg	mg/kg	mg/kg
Barium	BB	208	BB	BB	171
Cadmium	2.2	U	1.8	U	0.66(d)
Chromium	235	BB	44.5	BB	27.9
Silver	-	BB	3	BB	2.7
Zinc	188[JE]	BB	BB	BB	79
VOLATILE ORGANICS	µg/kg	µg/kg	µg/kg	µg/kg	µg/kg
2-Butanone	NA	22	5[J]	U	NR
4-Methyl-2-pentanone	NR	U	3[J]	U	NR
Acetone	NA	14	40	U	NR
Benzene	NA	U	1[J]	U	NR
Methylene Chloride	NA	5[J]	U	3[J]	NR
Toluene	NA	13	U	2[J]	NR
SEMI-VOLATILE	µg/kg	µg/kg	µg/kg	µg/kg	µg/kg
Anthracene	NA	U	27[J]	U	NR
Benzo(a)anthracene	NA	U	160[J]	U	NR
Benzo(a)pyrene	NA	U	97[J]	U	NR
Benzo(b)fluoranthene	NA	U	100[J]	U	NR
Benzo(k)fluoranthene	NA	U	130[J]	U	NR
bis(2-Ethylhexyl)phthalate	NA	800	U	U	NR
Chrysene	NA	U	190[J]	U	NR
Di-n-butylphthalate	NA	280[J]	U	U	NR
Di-n-octylphthalate	NA	170[J]	U	U	NR
Fluoranthene	NA	U	310[J]	U	NR
Phenanthrene	NA	U	120[J]	U	NR
PESTICIDES/PCB	µg/kg	µg/kg	µg/kg	µg/kg	µg/kg
Endrin	NA	U	U	16[J]	NR
RADIONUCLIDES (b)	pCi/g	pCi/g	pCi/g	pCi/g	pCi/g
Carbon-14	63[(R)(J)]	U	3.58[J]	< 1	NR
Potassium-40	23[(R)]	12	U	13.4[J]	NR
Cobalt-60	210[(R)]	< 1	U	< 1	NR
Nickel-63	5500[(R)(J)]	NA	NA	NA	NR
Strontium-90	92[(R)(J)]	1,500	39.2[J]	26	NR
Cesium-137	U	1,800	78.58	105[J]	NR
Europium-152	690[(R)]	16	U	6.87[J]	NR
Europium-154	73[(R)]	U	U	5.01[J]	NR
Europium-155	4.9[(R)]	NA	U	U	NR
Radium-226	< 1	< 1	U	13[J]	NR

Table 3-5 Analogous Site Comparison for 116-C-2A Pluto Crib System (Page 2 of 2)

Maximum Concentration	116-C-2A	116-F-4	116-B-3	116-D-2A	95% UTL (c)
Thorium-232	< 1	1.4[J]	U	NA	NR
Uranium-238	< 1	1.0	U	< 1	NR
Plutonium-239/240	< 1	130[J]	NR	1.0[R]	NR
Americium-241	< 1	12	< 1	< 1	NR

a = Inorganic values were screened against Hanford Site background 95% UTL (Table 2-2), Region X excluded elements.
b = Only radionuclides > 1 pCi/g were reported.
c = 95% confidence limit of the 95th percentile of the data distribution.
d = Value reported is limit of detection.
E = Estimated value.
J = Value is estimated, concentration less than contract required detection limit.
(J) = Estimated value, qualified by validators for administrative reasons due to incomplete paperwork transfer, revalidation of data underway.
R = Value marked as rejected in validation report.
(R) = Rejected by validators for administrative reasons due to incomplete paperwork transfer, used per Westinghouse Hanford Company instructions, revalidation of data underway.
NR = Not reported.
U = Not detected
BB = Concentration <95% UTL
NA = Not analyzed
Analogous site data taken from associate LFI reports, (DOE-RL 1993e) (DOE-RL 1993d), (DOE-RL 1994b) (DOE-RL 1994c).
UTL = upper threshold limit
LFI = limited field investigation

Table 3-6 100-BC-2 Operable Unit Waste Sites Up and Down Gradient Well Designations

High-Priority Sites			
Site Name	Upgradient Well	Downgradient Well	Other Possible Source Sites
116-C-2A	600 Area well	B9-1*, B9-2	118-C-1,1607-B9
116-C-2B	600 Area well	[B4-5]	116-C-3,118-C-2,116-C-2C,116-C-2A,118-C-4, 118-C-1,1607-B9,132-C-1,132-C-3
116-C-2C	600 Area well	[B4-5]	116-C-3,118-C-2,116-C-2B,116-C-2A,118-C-4, 118-C-1,1607-B9,132-C-1,132-C-3
Low-Priority Sites			
Site Name	Upgradient Well	Downgradient Well	Other Possible Source Sites
116-C-3	B9-1	[B4-5]	116-C-2C,118-C-2,116-C-2B,116-C-2A,118-C-4, 118-C-1,1607-B9,132-C-1,132-C-3
116-C-6	600 Area well	B9-3	118-C-1,1607-B9
1607-B10	600 Area well	[B5-1]	1607-B11,BC-1 source sites
1607-B11	600 Area well	[B5-1]	1607-B-10,BC-1 source sites
1607-B9	600 Area well	B9-1,B9-2,B9-3	118-C-1,116-C-2A,116-C-6
Solid Waste Burial Grounds			
Site Name	Upgradient Well	Downgradient Well	Other Possible Source Sites
118-B-1	600 Area well	{B8-6}	-
118-B-2	B4-4	-	-
118-B-3	[B9-3]	B4-8	-
118-B-4	B4-4	B4-1	118-B-6,BC-1 source sites
118-B-6	B4-4	B4-1	118-B-4,BC-1 source sites
118-C-1	600 Area well	B9-1,B9-2,B9-3	116-C-2A,1607-B9,116-C-6
118-C-2	600 Area well	[B4-5]	116-C-2C,116-C-3,116-C-2B,116-C-2A,118-C-4, 118-C-1,1607-B9,132-C-1,132-C-3
118-C-4	600 Area well	[B4-5]	116-C-2C,116-C-3,116-C-2B,116-C-2A,118-C-2, 118-C-1,1607-B9,132-C-1,132-C-3
128-C-1	600 Area well	-	-
132-C-1	600 Area well	[B4-5]	116-C-2C,116-C-3,116-C-2B,116-C-2A,118-C-2, 118-C-1,1607-B9,118-C-4,132-C-3
132-C-3	600 Area well	[B4-5]	116-C-2C,116-C-3,166-C-2B,116-C-2A,118-C-2, 118-C-1,1607-B9,118-C-4,132-C-1

*: Well is within the source area border
[ ]: Well is a considerable distance away from source area
{ }: Well is cross-gradient from source area

9413293.3095

Table 3-7 Groundwater Monitoring Wells 199-B9-1 and 199-B9-2 COPC Concentrations: From 100-BC-5 LFI (DOE-RL 1993c)

Well Number	199-B9-1			199-B9-2		
Round Number	1	2	3	1	2	3
Sample Number (a)	B072S4	B07K91	B07ZP2	B072S9	B07K96	B07ZP7
Bis(2-ethylhexyl)phthalate (ug/L)	U	U	U	52	U	U
Carbon-14 (pCi/L)	U	U	U	U	U	U
Strontium-90 (pCi/L)	U	1.7 J	1.2 J	0.16	U	U
Technetium-99 (pCi/L)	48	40 R	47	52	52	53
Tritium (pCi/L)	1900	1900	2000	2100	2200	2300

(a): Sample number reported for the majority of the analysis

J: Estimated Value

U: Undetected

R: Rejected Value

COPC: contaminant of potential concern

LFI: limited field investigation

9413293.3096

Table 3-8 Summary of Radionuclide Analytical Results for the Dorian and Richards (1978) Testhole: 116-C-2B Pluto Crib Pump Station (Decayed to July 1993)

Test Hole	A
Sample	30 ft
Radionuclide (pCi/g)	
Tritium	18
Cobalt-60	0.056
Strontium-90	1.4
Cesium-134	<0.001
Cesium-137	0.16
Europium-152	1.9
Europium-155	0.047
Plutonium-239/240	0.42 nd

nd: isotope activity not decayed, isotope half-life large enough no significant change in activity

9413293.3097

Table 3-9 Summary of Radionuclide Analytical Results for the Dorian and Richards (1978) Testholes and Grab Samples: 116-C-2C Pluto Crib Sand Filter (Decayed to July 1993)

Test Hole	A		B	C	D	Grab [a]			
Sample	25 ft	30 ft		22.5 ft		1	2	3	4
Radionuclide (pCi/g)									
Tritium	93	NA	NR	NA	NR	83	NA	NA	20
Cobalt-60	51	4.3	NR	19	NR	740000	12000	8600	10000
Strontium-90	9.2	14	NR	7.9	NR	19000	NA	NA	NA
Cesium-134	0.023	0.036	NR	0.0013	NR	NA	NA	NA	NA
Cesium-137	190	59	NR	110	NR	94000	3300	3800	1400
Europium-152	22	290	NR	110	NR	NA	NA	2000	NA
Europium-154	0.85	11	NR	9.5	NR	NA	NA	NA	NA
Europium-155	*	81	NR	1.1	NR	NA	NA	NA	NA
Plutonium-238	0.77 nd	*	NR	NA	NR	1600 nd	NA	NA	NA
Plutonium-239/240	7.9 nd	0.97 nd	NR	1.1 nd	NR	1500 nd	NA	NA	NA
Total Uranium	0.13 nd	NA	NR	NA	NR	NA	NA	NA	NA

*: Below detection limit

NA: Not analyzed for

nd: Isotope activity not decayed, isotope half-life large enough no significant change in acitivity has occured

[a]: Locations of the grab samples are as follows:

1) Crud from inlet distribution tray, approximately 3 ft below surface
2) Crud from outlet distribution tray, approximately 19 ft below surface
3) Inlet filter bed, approximately 3 ft below surface
4) Outlet filter bed, approximately 3 ft below surface

NR: Not reported

9413293.3098

Table 3-10 Human Health Risk Characterization: 116-C-2C Pluto Crib Sand Filter

	Frequent-Use Scenario				Occasional-Use Scenario			
Radionuclide COPC (a)	Ingestion ICR (b)	Inhalation ICR	External Exposure ICR	Total ICR (c)	Ingestion ICR	Inhalation ICR	External Exposure ICR	Total ICR (c)
Cesium-137	5.1E-03	2.9E-05	1.2E+01	> 1E-02 (f)	9.7E-05	5.5E-07	7.5E-02	> 1E-02 (f)
Cobalt-60	1.4E-02	1.2E-03	1.5E+02	> 1E-02 (f)	2.8E-04	2.3E-05	9.7E-01	> 1E-02 (f)
Europium-152	2.3E-06	1.0E-06	7.2E-02	> 1E-02 (f)	4.4E-08	1.9E-08	4.6E-04	5E-04
Plutonium-238	4.0E-04	6.0E-04	9.4E-07	1E-03	7.7E-06	1.1E-05	6.0E-09	2E-05
Plutonium-239/240 (e)	4.5E-04	6.3E-04	9.7E-07	1E-03	8.7E-06	1.2E-05	6.2E-09	2E-05
Strontium-90	9.0E-04	1.3E-05	---	9E-04	1.7E-05	2.5E-07	---	2E-05
Site Totals (d)	> 1E-02 (f)	3E-03	> 1E-02 (f)	> 1E-02 (f)	4E-04	5E-05	> 1E-02 (f)	> 1E-02 (f)

(a) COPC = contaminant of potential concern: presents a significant human health effect
(b) ICR = incremental cancer risk
(c) Total COPC lifetime ICR from all pathways.
(d) Total ICR from all COPC over all pathways.
(e) Risk characterization is based on combined isotope radioactivity.
(f) All ICR > 1E-02 represent "high" estimated human health risk.
--- No toxicity data available for this pathway.

Table 3-11 Human Health Risk Characterization - Projected to Year 2018: 116-C-2C Pluto Crib Sand Filter

	Frequent-Use Scenario				Occasional-Use Scenario			
Radionuclide COPC (a)	Ingestion ICR (b)	Inhalation ICR	External Exposure ICR	Total ICR (c)	Ingestion ICR	Inhalation ICR	External Exposure ICR	Total ICR (c)
Cobalt-60	5.4E-04	4.5E-05	5.7E+00	>1E-02 (f)	1E-05	8.6E-07	3.6E-02	>1E-02 (f)
Strontium-90	4.9E-04	7.1E-06	----	5E-04	9.5E-06	1.4E-07	-----	10E-06
Cesium-137	2.9E-03	1.6E-05	6.6E+00	<1E-02 (f)	5.5E-05	3.1EE-07	4.2E-02	>E-02 (f)
Europium-152	6.4E-07	2.8E-07	2.0E-02	>1E-02 (f)	1.2E-08	5.4E-09	1.3E-04	1E-04
Plutonium-238	3.3E-04	4.9E-04	7.7E-07	8E-04	6.4E-06	9.4E-06	4.9E-09	2E-05
Plutonium 239/240	4.5E-04	6.3E-04	9.7E-07	1E-03	8.7E-06	1.2E-05	6.2E-09	2E-05
Site Total	5E-03	1E-03	>1E-02 (f)	>1E-02 (f)	9E-05	2E-05	>1E-02 (f)	>1E-02 (f)

(a) COPC = contaminant of potential concern: presents a significant human health effect
(b) ICR = incremental cancer risk
(c) Total COPC lifetime ICR or hazard index (HI) from all pathways.
(d) Total lifetime ICR or HI from all COPC over all pathways
(e) Risk characterization is based on most toxic COPC
(f) All ICR >1E-02 represent "high" estimated human health risk.
--- No toxicity data available for this pathway

Table 3-12 Estimated Dose Rate for the Great Basin Pocket Mouse: 116-C-2C Pluto Crib Sand Filter

Isotope	Activity/g Soil (pCi/g)	Activity/kg Vegetation (wet) (Ci/kg)	Dose Rate (rad/day)	Exceeds EHQ
Tritium	83	1.83E-10	1.5E-05	No
Cobalt-60	740,000	1.18E-04	1.7E+00	Yes
Strontium-90	19,000	1.16E-04	1.3E+02	Yes
Cesium-137	94,000	1.86E-05	7.9E-01	No
Europium-152	830	2.66E-10	1.4E-07	No
Plutonium-238	1,390	3.14E-08	9.1E-04	No
Plutonium-239/240	1,490	3.36E-08	9.2E-04	No
Total			132	Yes

Note: Historical data decayed to July 1993.
EHQ: environmental hazard quotient

Table 3-13 Summary of Environmental Hazard Quotients for Radionuclides by Waste Site

Waste Site	Dose Rate Exceeds 1 rad/day (EHQ of 1) 0-6 feet	Dose Rate Exceeds 1 rad/day (EHQ of 1) 6-15 feet
166-C-2C Pluto Crib Sand Filter	Yes	NA
118-B-1 Burial Ground	NA	No

NA = No data available
EHQ = environmental hazard quotient

9413293.3102

Table 3-14 Summary of In Situ Geiger-Mueller and LTP Readings from the Dorian and Richards (1978) Testholes: 118-B-1 Burial Ground (Page 1 of 2)

Test Hole	A	
Trench	1,2 or 4	
GM	all ft	Background
Test Hole	B	
Trench	1,2 or 4	
GM	0 - 8 ft	Background
	9 - 10 ft	2000 cpm
	12 ft	5000 cpm
	13 - 14 ft	4000 cpm
	15 - 16 ft	2000 cpm
	20 ft	Background
Test Hole	C	
Trench	1,2 or 4	
GM	all ft	Background
Test Hole	D	
Trench	1,2 or4	
GM	0 - 5 ft	Background
	6 ft	2000 cpm
	rest ft	Background
Test Hole	E	
Trench	1,2 or4	
GM	all ft	Background
Test Hole	F	
Trench	1,2 or4	
GM	all ft	Background
Test Hole	G	
Trench	7	
GM	0 - 10 ft	Background
	10 - 12 ft	7500 cpm
	12 - 15 ft	50000 cpm
	15 - 22 ft	Background
Test Hole	H	
Trench	13	
GM	0 - 12 ft	Background
	12 - 14 ft	20000 - 80000 cpm
	17 ft	off scale
LTP	17 - 19 ft	170 mR/hr
	19 - 20 ft	300 mR/hr
	20 - 22ft	120 mR/hr
	22 - 25 ft	Background

9413293.3103

Table 3-14 Summary of In Situ Geiger-Mueller and LTP Readings from the Dorian and Richards (1978) Testholes: 118-B-1 Burial Ground (Page 2 of 2)

Test Hole	I	
Trench	13	
GM	20 ft	600 cpm
Test Hole	J	
Trench	13	
GM	0 - 10 ft	Background
	14 ft	1000 cpm
	15 ft	3000 cpm
	16 ft	5000 cpm
	18 ft	4000 cpm
	20 ft	1000 cpm
	25 ft	Background
Test Hole	K	
Trench	P-2	
GM		No radioactivity detected
Test Hole	L	
Trench	?12?	
GM	all ft	Background
Test Hole	M	
Trench	northern	
GM	0 - 10 ft	Background
	12 ft	1000 cpm
	14 ft	Full scale
	15 ft	60 mR/hr
	20 ft	20 mR/hr
Test Hole	N	
Trench	northern	
GM	10 ft	3000 cpm
	13 ft	14000 cpm
	15 ft	2000 cpm
	18 ft	800 cpm
	19 ft	Background

GM: Geiger - Muller probe
LTP: Low-range totem pole probe
cpm: counts per minute
mR: milliRad

Table 3-15 Summary of Radionuclide Analytical Results for the Dorian and Richards (1978) Testholes: 118-B-1 Burial ground (Decayed to July 1993)

Test Hole	A	B	C	D	E	F	G		
Trench	1,2 or 4	1,2 or 4	1,2 or 4	1,2 or 4	1,2 or 4	1,2 or 4	7		
Sample	20 ft						15 ft	22 ft	22.5 ft
Radionuclide (pCi/g)									
Cobalt-60	0.007	NR	NR	NR	NR	NR	3.5	17000	10
Nickle-63	NA	NR	NR	NR	NR	NR	NA	28	NA
Strontium-90	0.017	NR	NR	NR	NR	NR	0.07	0.4	0.38
Cesium-134	NA	NR	NR	NR	NR	NR	NA	NA	NA
Cesium-137	0.026	NR	NR	NR	NR	NR	0.36	1800	0.94
Europium-152	NA	NR	NR	NR	NR	NR	0.19	1900	5.4
Europium-154	NA	NR	NR	NR	NR	NR	0.17	690	0.24
Europium-155	0.036	NR	NR	NR	NR	NR	0.0058	54	*
Plutonium-239/240	NA	NR	NR	NR	NR	NR	NA	NA	NA
Total uranium	NA	NR	NR	NR	NR	NR	NA	NA	NA
Non radionuclide									

Test Hole	H		I	J		K	L	M			N
Trench	13		13	13		P-2	?12?	northern			northern
Sample	20 ft	33 ft [a]		25 ft	30.5 ft			20 ft	25 ft	32 ft	20 ft
Radionuclide (pCi/g)											
Cobalt-60	11	850	NR	9.4	36	NR	NR	*	540	39	
Nickle-63	NA	NA	NR	NA	NA	NR	NR	NA	69	NA	
Strontium-90	0.4	NA	NR	0.06	0.015	NR	NR	0.13	92	4.1	
Cesium-134	*	0.039	NR	*	0.00085	NR	NR	0.19	*	*	
Cesium-137	0.87	81	NR	*	0.87	NR	NR	44	33	3.6	
Europium-152	0.79	1300	NR	0.95	0.33	NR	NR	34	12	2.2	
Europium-154	0.69	98	NR	0.16	0.46	NR	NR	120	640	2	
Europium-155	0.14	1.6	NR	0.015	0.05	NR	NR	4.3	0.67	0.27	
Plutonium-239/240	NA	NA	NR	*	0.42 nd	NR	NR	0.28 n	0.59 nd	1 nd	
Total uranium	NA	NA	NR	NA	NA	NR	NR	NA	0.16 nd	NA	
Non radionuclide											Oil & grease

*: Below detection limit

NA: Not analyzed for

nd: Isotope activity not decayed, istope half-life large enough no significant change in activity has occured

[a]: Sample H-33 was a perforated aluminum fuel element spacer (dummy) found 20 ft. east of trench #7; it was not a sample taken from 33 ft below grade at this location.

NR: Not reported

Table 3-16 Groundwater Monitoring Well 199-B8-6 COPC Concentrations: From 100-BC-5 LFI (DOE-RL 1993b)

Well Number	199-B8-6		
Round Number	1	2	3
Sample Number (a)	B070P7	B07KB6	B07ZN7
Bis(2-ethylhexyl) phthalate (ug/L)	U	U	U
Carbon-14 (pCi/L)	410 J	U	U
Strontium-90 (pCi/L)	U	U	U
Technetium-99 (pCi/L)	35	33	35
Tritium (pCi/L)	6300	2400	2200

(a): Sample number reported for the majority of the analysis

NA: Not Available

U: Undetected

LFI: limited field investigation

COPC: contaminant of potential concern

9013293.3106

Table 3-17 Human Health Risk Characterization: 118-B-1 Burial Ground

	Frequent-Use Scenario				Occasional-Use Scenario			
Radionuclide COPC (a)	Ingestion ICR (b)	Inhalation ICR	External Exposure ICR	Total ICR (c)	Ingestion ICR	Inhalation ICR	External Exposure ICR	Total ICR (c)
Cobalt-60	6.9E-08	5.8E-09	7.3E-04	7E-04	1.3E-09	1.1E-10	4.6E-06	5E-06
Cesium-137	1.3E-08	7.6E-11	1.7E-05	2E-05	2.6E-10	1.5E-12	1.1E-07	1E-07
Europium-152	5.3E-10	2.3E-10	1.7E-05	2E-05	1.0E-11	4.4E-12	1.1E-07	1E-07
Europium-154	6.7E-10	2.6E-10	1.7E-05	2E-05	1.3E-11	5.0E-12	1.1E-07	1E-07
Site Totals (d)	8E-08	6E-09	8E-04	8E-04	2E-09	1E-10	5E-06	5E-06

(a) COPC = contaminant of potential concern: presents a significant human health effect
(b) ICR = incremental cancer risk
(c) Total COPC lifetime ICR or hazard index (HI) from all pathways.
(d) Total lifetime ICR or HI from all COPC over all pathways

Table 3-18 Human Health Risk Characterization - Projected to Year 2018: 118-B-1 Burial Ground

	Frequent-Use Scenario				Occasional-Use Scenario			
Radionuclide COPC (a)	Ingestion ICR (b)	Inhalation ICR	External Exposure ICR	Total ICR (c)	Ingestion ICR	Inhalation ICR	External Exposure ICR	Total ICR (c)
Cobalt-60	2.6E-09	2.2E-10	2.7E-05	3E-05	5.0E-11	4.1E-12	1.7E-07	2E-07
Cesium-137	7.5E-09	4.3E-11	9.8E-06	10E-06	1.4E-10	8.2E-13	6.3E-08	6E-08
Europium-152	1.5E-10	6.5E-11	4.6E-06	5E-06	2.8E-12	1.2E-12	2.9E-08	3E-08
Europium-154	9.3E-11	3.6E-11	2.3E-06	2E-06	1.8E-12	7.0E-13	1.5E-08	2E-08
Site Totals (d)	1E-08	4E-10	4E-05	4E-05	2E-10	7E-12	3E-07	3E-07

(a) COPC = contaminant of potential concern: presents a significant human health effect
(b) ICR = incremental cancer risk
(c) Total COPC lifetime ICR or hazard index (HI) from all pathways.
(d) Total lifetime ICR or HI from all COPC over all pathways

Table 3-19 Summary of the Human Health Qualitative Risk Assessment for the 100-BC-2 Operable Unit's High-Priority Sites and Solid Waste Burial Grounds

Waste Site Designation	Frequent-Use Scenario				Occasional-Use Scenario			
	Qualitative Risk Classification (a)	Major Contaminant	Major Pathway	2018 Qualitative Risk Classification (a)	Qualitative Risk Classification (a)	Major Contaminant	Major Pathway	2018 Qualitative Risk Classification (a)
116-C-2A Pluto Crib	All COPC soil samples were below 15 foot depth, therefore no human health risk assessment is provided.							
116-C-2B Pluto Crib Pump Station	All COPC soil samples were below 15 foot depth, therefore no human health risk assessment is provided.							
166-C-2C Pluto Crib Sand Filter	High	Cobalt-60 Cesium-137 Europium-152	External Radiation	high	High	Cobalt-60 Cesium-137 Europium-152	External Radiation	High
118-B-1 Burial Ground	Medium	Cobalt-60	External Radiation	low	Low	Cobalt-60	External Radiation	Very Low
118-C-1 Burial Ground	This site is analogous to the 118-B-1 Burial Ground							
Only process knowledge is available for the following sites, therefore no human health risk analysis is provided.								
118-B-2, 118-B-3, 118-B-4, 118-B-6, Burial Grounds	118-C-2 Ball Storage Tank 118-C-4 Horizontal Control Rod Storage Cave 128-C-1 Burning Pit				132-C-1 Reactor Exhaust Stack Burial Site 132-C-3 Exhaust Air Filter Building Burial Site			

(a) Very Low = very low qualitative risk; incremental cancer risk (ICR) < 10E-06
Low = low qualitative risk; 10E-06 < ICR < 10E-04
Medium = medium qualitative risk; 10E-04 < ICR < 10E-02
High = high qualitative risk; ICR > 10E-02

Table 3-20 Estimated Dose Rate for the Great Basin Pocket Mouse: 118-B-1 Burial Ground

Isotope	Activity/g Soil (pCi/g)	Activity/kg Vegetation (wet) (Ci/kg)	Dose Rate (rad/day)	Exceeds EHQ
Cobalt-60	3.5	6.63E-10	8.0E-06	No
Strontium-90	0.07	4.01E-10	4.5E-04	No
Cesium-137	0.36	7.14E-11	3.1E-06	No
Europium-152	0.19	6.08E-14	3.1E-11	No
Europium-154	0.17	5.44E-14	7.2E-11	No
Europium-155	0.0058	1.92E-15	4.8E-13	No
Total			4.6E-04	No

Note: Historical data decayed to July 1993.
EHQ: environmental hazard quotient

9413293.3110

Table 3-21 Groundwater Monitoring Wells 199-B4-8 and 199-B9-3 COPC Concentrations: From 100-BC-5 LFI (DOE-RL 1993b)

Well Number	199-B4-8					199-B9-3		
Round Number	1	2	3	3.Dup #1	3.Split #1	1	2	3
Sample Number (a)	B070M7	B07K76	B07ZL7	B07ZV2	B07ZW2	B072T4	B07KB1	B07ZQ2
Bis(2-ethylhexyl) phthalate (ug/L)	6J	U	U	U	NA	U	U	U
Carbon-14 (pCi/L)	U	U	U	U	NA	U	U	U
Strontium-90 (pCi/L)	1.3	1.3 J	1.2 J	U	NA	0	U	U
Technetium-99 (pCi/L)	79	75	87	85	NA	55	60	60
Tritium (pCi/L)	3000	3300	3600	3500	NA	2100	2700	2600

(a): Sample number reported for the majority of the analysis

NA: Not Available

J: Estimated Value

U: Undetected

LFI: limited field investigation

COPC: contaminant of potential concern

Table 3-22 Groundwater Monitoring Wells 199-B4-1 and 199-B4-4 COPC Concentrations: From 100-BC-5 LFI (DOE-RL 1993b)

Well Number	199-B4-1			199-B4-4						
Round Number	1	2	3	1	2	2:Dup #1	2:Split #1	3	3:Dup #2	3:Split #2
Sample Number (a)	B070K7	B07K71	B07ZJ7	B070L2	B07KM3	B07KJ1	B07KL1	B07ZK2	B07ZV7	B07ZW7
Bis(2-ethylhexyl) phthalate (ug/L)	11	6 J	U	U	U	U	U	U	U	0.9J
Carbon-14 (pCi/L)	U	U	U	U	96	U	NA	U	U	NA
Strontium-90 (pCi/L)	22	23 J	23	26	33 J	34 J	NA	33	33	NA
Technetium-99 (pCi/L)	68	59	70	65	65	63	NA	70	70	NA
Tritium (pCi/L)	2700	2700	3100	3000	2600	2600	NA	2800	2600	NA

(a): Sample number reported for the majority of the analysis

NA: Not Available

J: Estimated Value

U: Undetected

LFI: limited field investigation

COPC: contaminant of potential concern

Table 3-23 Groundwater Monitoring Wells 199-B9-1, 199-B9-2 and 199-B9-3 COPC Concentrations: From 100-BC-5 LFI (DOE-RL 1993b)

Well Number	199-B9-1			199-B9-2			199-B9-3		
Round Number	1	2	3	1	2	3	1	2	3
Sample Number (a)	B072S4	B07K91	B07ZP2	B072S9	B07K96	B07ZP7	B072T4	B07KB1	B07ZQ2
Bis(2-ethylhexyl) phthalate (ug/L)	U	U	U	52	U	U	U	U	U
Carbon-14 (pCi/L)	U	U	U	U	U	U	U	U	U
Strontium-90 (pCi/L)	U	1.7 J	1.2 J	0.16	U	U	0	U	U
Technetium-99 (pCi/L)	48	40 R	47	52	52	53	55	60	60
Tritium (pCi/L)	1900	1900	2000	2100	2200	2300	2100	2700	2600

(a): Sample number reported for the majority of the analysis

J: Estimated Value

U: Undetected

LFI: limited field investigation

COPC: contaminant of potential concern

4.0 QUALITATIVE RISK ASSESSMENT SUMMARY AND CONCLUSIONS

4.1 HUMAN HEALTH EVALUATION

The 100-BC-2 Operable Unit human health QRA provides estimates of risks that occur under frequent-use or occasional-use scenarios based on the best available knowledge of current waste site conditions. Because neither of these exposure scenarios currently occur, the results of this QRA provide upper and lower limits of potential future health risks.

4.1.1 Results of the Human Health Evaluation

Table 3-19 summarizes the results of the 100-BC-2 Operable Unit waste sites for which a human health risk was established. The external radiation exposure pathway is shown to be the primary risk-contributing pathway at the evaluated waste sites. Consequently, radionuclide COPC which are external radiation exposure hazards; cobalt-60, cesium-137, and europium-152; are considered the primary risk-contributing COPC.

4.1.1.1 116-C-2C Pluto Crib Sand Filter. The 116-C-2C pluto crib sand filter has a "high" human health risk for the frequent- and occasional-use scenarios. External radiation exposure is the major pathway contributing to ICR for this site. The major risk driving radionuclides are cobalt-60, cesium-137 and europium-152.

The human health risks from delaying the onset of human frequent-use and occasional-use scenario exposures to the year 2018 are shown in Table 3-11. No reduction of human health risk is anticipated at the 116-C-2C pluto crib sand filter under the frequent-use or occasional-use scenario.

4.1.1.2 118-B-1 Burial Ground. The 118-B-1 burial ground waste site has a "medium" human health risk potential for the frequent-use scenario and "low" human health risk potential for the occasional-use scenario. Historical information was used to estimate the qualitative risk for this site. Historical data are considered to have medium uncertainty which can be reduced if additional site-specific data become available for this waste site.

The potential decreases in human health risks from delaying the onset of human frequent-use scenario exposures to the year 2018 are shown in Table 3-18. A reduction of one qualitative risk category ("medium" to "low") is anticipated at the 118-B-1 burial ground under the frequent-use scenario. This risk reduction can be primarily attributed to the radioactive decay of cobalt-60 and cesium-137.

4.1.1.3 Other Burial Grounds. With the exception of the 118-B-1 burial ground, no historical or LFI chemical data are available for the solid waste burial grounds. Process knowledge information is available and is considered to have a high uncertainty in evaluating possible human health risk of exposure. Therefore risk under frequent and occasional land-use scenarios is highly uncertain. Although the risk is unknown we could expect that it may be appreciable. Under a frequent-use scenario in which excavation may take place it

would be expected that the risk would be high from external exposure. At the present time no data is available to quantify this risk.

4.1.2 Summary of Key Uncertainties in the Human Health Evaluation.

The human health risks presented in this QRA are conditional estimates that reflect multiple assumptions and related uncertainties. A summary of the uncertainty of identified contaminants and exposure assessment for the 100-BC-2 Operable Unit waste sites is presented in Table 4-1.

Exposure estimates to hypothetical human receptors include an extrapolation of external radiation exposures and air COPC particulate concentrations from soil COPC concentrations. The uncertainty associated with the external radiation exposure extrapolation is expected to greatly impact this QRA because this exposure pathway was found to be the primary risk contributor at the 100-BC-2 Operable Unit waste sites. Media specific data (e.g., external radiation dosimeters) would significantly reduce this source of uncertainty in the 100-BC-2 Operable Unit QRA.

An assumption of an "infinite source" geometry, such that homogenous distributions at the maximum soil concentration of each radionuclide COPC is used to evaluate individual external radiation exposure risks. Uncertainty is introduced into the QRA because this assumption ignores the differences in radiation intensity provided for any other distribution of radionuclide COPC in soil, and results in an over estimation of the external radiation exposure risks. Because the external radiation exposure pathway was found to be the primary risk-contributing pathway at all evaluated waste sites, this source of uncertainty significantly impacts the 100-BC-2 Operable Unit QRA.

The use of maximum soil concentrations of all COPC from the surface to a depth of 4.6 m (15 ft) as the exposure point concentration ignores the spatial distributions of surface and subsurface COPC concentrations which exist at all waste sites. Because the maximum concentrations are assumed to be ubiquitous and readily assessable to potential human receptors, this source of uncertainty may result in over estimation of the exposure intakes and corresponding health risks, from all COPC detected at each waste site.

4.2 ECOLOGICAL EVALUATION

A qualitative ecological evaluation is completed for radiological constituents for the 100-BC-2 Operable Unit. The findings are:

- Soils < 1.8 m (0-6 ft) in depth inside the 116-C-2C pluto crib sand filter exceed the 1 rad/day benchmark with an EHQ > 1.

- Soils from 1.8-4.6 m (6-15 ft) inside the 118-B-1 burial ground do not exceed the 1 rad/day benchmark.

Although a significant EHQ has been estimated for radionuclides within 1.8 m (6 ft) of the soil surface at the 116-C-2C pluto crib sand filter, the sand filter is in an enclosed concrete box that is covered with concrete shielding slabs. There are, therefore, few radionuclides available for uptake by plants which can be biologically transported to the pocket mouse. This result indicates that there is less of a hazard for biotransport of contaminants to the pocket mouse. Both strontium-90 and cobalt-60 exceed the EHQ of 1 rad/day. However, strontium-90 is the primary contributor to the total dose rate.

4.2.1 Summary of Key Uncertainties in the Ecological Evaluation

The uncertainty in contaminant concentrations for the ecological evaluation is related to the accuracy of the data. Uncertainty exists in both the contaminants identified and the exposure concentrations. As for the human health assessment, the maximum contaminant concentration is used. Uncertainty associated with site-specific information is discussed in Chapter 3 for the individual sites analyzed.

The QRA models the potential exposure of pocket mice suspected to be present in or near the waste site. The issues of concern with regard to ecological risk assessment (particularly qualitative) are the uncertainties in using an assortment of environmental variables in risk modeling. If this number is not realistic, no amount of modeling will overcome this deficiency. For example, in the case of the QRA, the maximum reported waste concentration is generally used as the source term no matter how deep this concentration was found. Site-specific organisms (e.g., pocket mouse), are identified as being associated with a site, but little if any data may exist concerning transfer of contaminants to site-specific organisms. Often, it is necessary to use biological trophic transfer information for related species. A significant source of uncertainty in the exposure scenario are the assumptions of uniform waste sites and total contamination of mouse foodstuffs. No provision is made for dilution of contaminated foodstuff by noncontaminated foodstuff. It is necessary to use some transfer coefficients from non-Hanford specific plants for modeling the uptake of contaminants from soil-to-plants. The approach does not consider whether roots of a plant actually grow deep enough to contact a contaminant, and the model does not account for reduced concentrations from plant to seed (it was assumed the seed concentration is the same as the plant). The pocket mouse food consumption rate is generalized and seasonal behavior (hibernation) that can reduce internal exposure and body burden is not considered.

Table 4-1 Summary of Contaminant Identification and Exposure Assessment Uncertainties for the 100-BC-2 Operable Unit Sites

Waste Site Designation	Data Uncertainty (for external exposure)	Exposure Assessment Uncertainty		Toxicity Assessment Uncertainty	Potential Impact of Uncertainties on the Risk Characterization
		Occasional-use Scenario	Frequent-use Scenario		
166-C-2 Pluto Crib Sand Filter	Moderate	Low	High	Moderate to High	Over Estimation
118-B-1 Burial Ground	Moderate	High	High	Moderate to High	Over Estimation
118-C-1 Burial Ground	Analogous to 118-B-1 Burial Ground				

9413293.3117

5.0 RECOMMENDATIONS

The primary purpose of this LFI report is to recommend those high-priority sites that should remain candidates on the IRM path and those high-priority sites which should not. Sites that are not recommended as candidates on the IRM path will be addressed in the final remedy selection process. The recommendations presented below are generally independent of future land use issues.

5.1 HIGH-PRIORITY SITE IRM CANDIDATE EVALUATION CRITERIA

The 100-BC-2 Operable Unit high-priority sites were evaluated to identify those sites where continued IRM candidacy is recommended using the following criteria:

- results from the QRA
- assessment of the waste site conceptual model
- identification of any ARAR exceedance for vadose zone contaminants
- evaluation of site-specific contaminant impact on groundwater
- identification of sites where natural attenuation of contaminants, by the year 2018 may reduce risks and mitigate contamination.

5.1.1 Qualitative Risk Assessment

The QRA provides risk estimates for human health and for adverse ecological effects. Human health risks, specifically ICR, for one high-priority site, 116-C-2C pluto crib sand filter, were developed by the QRA using two scenarios: low frequency use and high frequency use. The low frequency use risk values are used to evaluate the continued candidacy of high-priority sites for IRM. The qualitative risk estimations presented in Table 3-19 are grouped into "high" (ICR > 1E-02), "medium" (ICR > 1E-4 to 1E-02), "low" (ICR > 1E-06 to 1E-04), and "very low" (ICR < 1E-06) risk categories based on results presented in Section 2 of this report. Sites that pose "medium" to "high" risks to human health under the low frequency use scenario are recommended to continue as IRM candidates.

Environmental hazard quotient ratings are from the qualitative ecological risk assessment that was performed in the QRA. Sites that have an EHQ > 1 for radionuclides or nonradiological constituents present potentially adverse ecological impacts and are recommended to continue as IRM candidates.

5.2.2 Conceptual Model

The conceptual model for a waste site includes sources of contamination, types of contaminants, nature and extent of contamination in each affected media, known and potential routes of migration, known or potential human and environmental receptors and the general understanding of the site structure/process. This information is included in Chapter 3.0 of the 100-BC-2 Operable Unit work plan (DOE-RL 1993a) and has been revised using data obtained during the LFI. Table 5-1 presents sources of contamination, types of contaminants, nature and extent of contamination in each affected media, and the general understanding of the structure/process for each high-priority waste site. Figure 5-1 presents the known and potential routes of migration and the known or potential human and environmental receptors for the operable unit. If the conceptual model of a site is incomplete, the site is recommended to remain as an IRM candidate while the data needed to complete the model are collected. After the data are available the site will be reevaluated for continued candidacy for an IRM. The additional data may be obtained through limited field sampling.

5.2.3 Applicable or Relevant and Appropriate Requirements

The Washington State MTCA Method B concentrations are potential ARAR for soil contamination, as discussed in Section 2.7 of this report and in the *100 Area Feasibility Study, Phases 1 and 2* (DOE-RL 1992c). Model Toxics Control Act Method B regulatory limits for soil contaminant concentrations are utilized since they are the standard approach and are conservative. Table 5-2 lists the Hanford Site background 95% UTL values for metallic constituents in soils and MTCA Method B guidelines for soil. Sites that have concentrations of contaminants which exceed this potential chemical-specific ARAR are recommended to continue as IRM candidates.

5.2.4 Current Impact on Groundwater

The probability of current impact on groundwater is evaluated for each site by comparing groundwater contaminant concentrations from monitoring wells located upgradient and downgradient of each specific site, where wells are available. Concentrations of tritium, strontium-90, and technetium-99 in upgradient and downgradient wells are compared. Groundwater contaminant concentrations in a downgradient well that are higher than in an upgradient well indicate current impact to groundwater. Sites that are impacting groundwater are recommended to continue as IRM candidates.

5.2.5 Potential for Natural Attenuation

The potential for the contaminants at a site to be reduced by natural attenuation, radioactive decay by the year 2018, may be a consideration at sites where radionuclides with half lives <30 years are the primary contaminant and external exposure is the only pathway. Sites with excess risk solely attributed to radionuclides with half lives <30 years, cobalt-60,

cesium-137, europium-152, and europium-154, have potential for natural reduction of risk through radioactive decay. Natural attenuation is not a consideration for sites contaminated by metals, by radionuclides with half-lives >30 years, or where multiple exposure pathways drive the risk.

5.3 HIGH-PRIORITY SITE IRM CANDIDATE RECOMMENDATIONS

The final selection of IRM sites, priority of action, and order of performance are decisions left to the Tri-Party Agreement signatories. Factors that the Tri-Party Agreement signatories may consider in the selection and prioritization of IRM sites include:

- impact of IRM actions in relation to the 100 Area Environmental Impact Statement
- access control
- relation to the IRM program plan recommendations
- land use
- point of compliance
- time of compliance
- feasibility
- bias-for-action
- threat to human health and the environment.

The high-priority sites and solid waste burial grounds recommended to continue as IRM candidates are identified in the "IRM Candidate" column of the Table 5-3. The recommendations are discussed below.

5.3.1 116-C-2A Pluto Crib

The 116-C-2A pluto crib is recommended to continue as a candidate for an IRM because groundwater monitoring data indicate the site may be impacting groundwater. Concentrations of tritium, strontium-90 and technetium-99 in wells 199-B9-1 (directly beneath the site) and 199-B9-2 (downgradient) are similar (Table 3-7). The actual impact to groundwater could not be assessed because there are no nearby upgradient wells. Only strontium-90 was detected in the LFI borehole. The maximum concentration from the LFI borehole sediments was an estimated value of 92 pCi/g. No human health or environmental risk was calculated at this site because the depth of contamination is greater than the 4.6 m (15 ft) risk analysis cutoff depth.

5.3.2 116-C-2B Pluto Crib Pump Station

The 116-C-2B pluto crib pump station is recommended to continue as a candidate for an IRM because of the potential for groundwater impact. The actual impact to groundwater could not be assessed because there are no nearby upgradient or downgradient monitoring wells. Well 199-B4-5 is over 200 m (656 ft) away from the site and there are numerous other sources which may be impacting the groundwater at this well (Table 3-6). No human health or environmental risks were assessed as samples collected by Dorian and Richards (1978) was taken from a depth greater than the 4.6 m (15 ft) risk analysis cutoff depth. Historical data collected by Dorian and Richards (1978) indicate radionuclide contamination at the base of the pump station. The detections are consistent with those found in the LFI borehole drilled in the 116-C-2A pluto crib.

5.3.3 116-C-2B Pluto Crib Sand Filter

The 116-C-2B pluto crib sand filter is recommended to continue as a candidate for an IRM because the human health risk is "high" and the EHQ > 1. The major risk drivers for the human health are radionuclide cobalt-60, cesium-137 and europium-152. The ecological risk driver is strontium-90. Natural attenuation by year 2018 (radioactive decay) will not reduce the risk posed by the principal contaminants and associated exposure pathway. The potential for site impact to groundwater exists. The actual impact to groundwater could not be assessed because there are no nearby upgradient or downgradient monitoring wells. Well 199-B4-5 is over 200 m (656 ft) away from the site and there are numerous other sources which may be impacting the groundwater at this well (Table 3-6).

5.4 SOLID WASTE BURIAL GROUND RECOMMENDATIONS

It is recommended that the solid waste burial grounds remain on the IRM pathway as designated in the 100-BC-2 Operable Unit work plan (DOE-RL 1993a). Review of available data substantiates the original placement of the burial grounds on the IRM pathway.

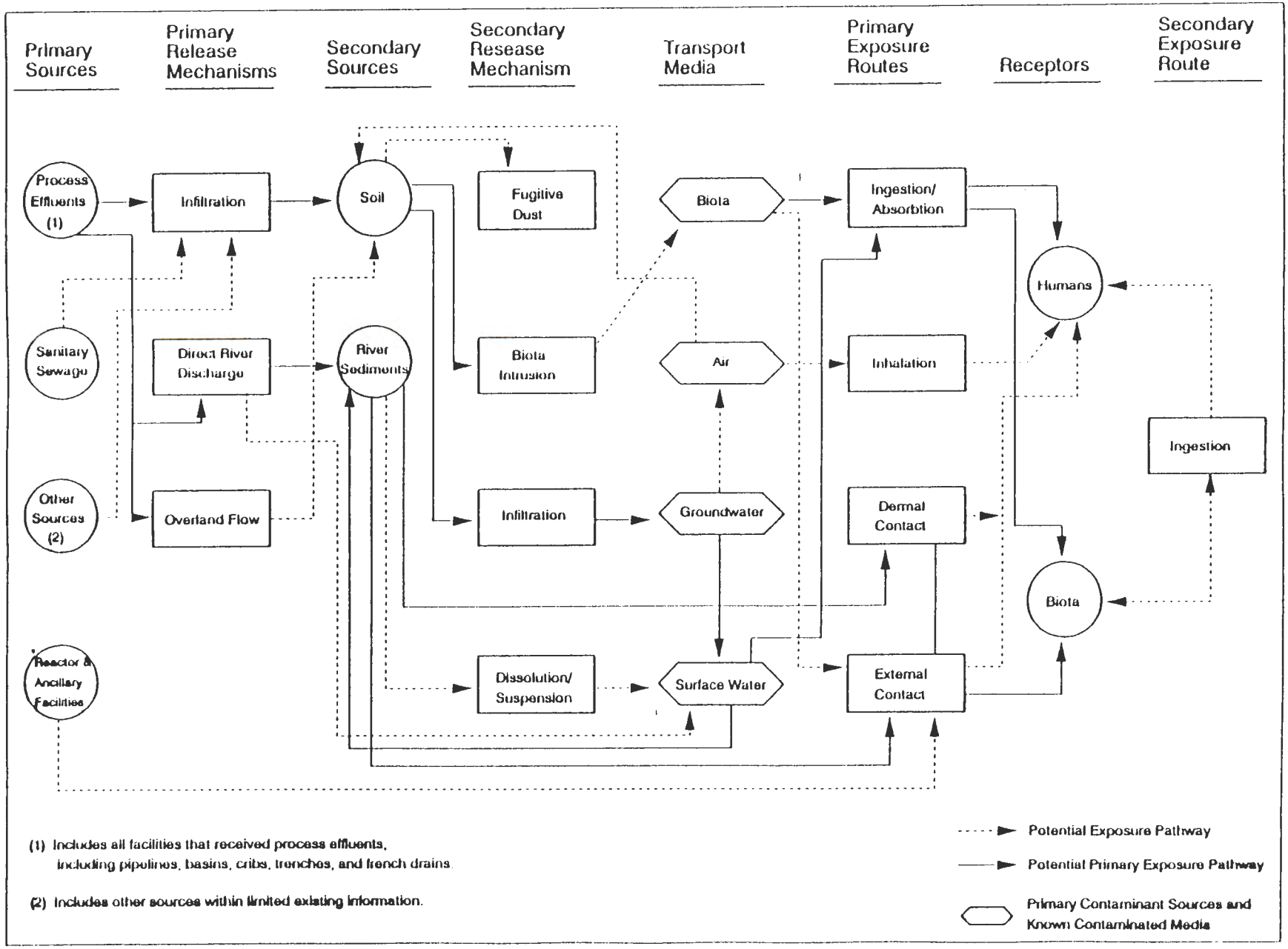

Figure 5-1 Conceptual Model Contaminant Exposure Pathway for the 100-BC-2 Operable Unit

Table 5-1 Conceptual Model for 100-BC-2 Operable Unit High-Priority Sites

Site	Structure/Process	Contaminant Source	Contaminants	Nature and Extent of Contamination [a]
116-C-2A	Pluto Crib 7 x 4.9 x 1.5 m deep	Received cooling water from process tubes affected by fuel cladding failures and effluents from the C reactor building	Cd, Cr, Zn, ^{14}C, ^{40}K, ^{60}Co, ^{63}Ni, ^{90}Sr, ^{152}Eu, ^{154}Eu, ^{155}Eu [b]	Contamination found from 8.0 to 15.5 m (22.9 to 50.7 ft)
116-C-2B	Pluto Crib Pump Station 3 x 2.4 x 9.1 m	Pumped liquid wastes from the C Reactor building to the pluto crib sand filter	^{3}H, ^{90}Sr, ^{152}Eu [b]	Sample collected from 9.1 m (30 ft) depth
116-C-2C	Pluto Crib Sand Filter 11.5 x 5.5 x 5.5 m	Received cooling water from process tubes affected by fuel cladding failures and effluents from the C Reactor building	^{60}Co, ^{90}Sr, ^{137}Cs, ^{152}Eu, ^{238}Pu, $^{239/240}Pu$	NonLFI test holes show contamination to 9.1 m (30 ft) at 3 m lateral distance from site.

[a] = Lateral extent of contamination is assumed to be equal to the facility dimensions, unless other wise noted. The LFI was not designed to establish the lateral (areal) extent of contamination.

[b] = These contaminants represent detections from either LFI or historical data. Contaminants of potential concern screening was not completed because samples were below the 4.6 m (15 ft) screening cutoff depth.

LFI = limited field investigation

9413293.3123

Table 5-2 Hanford Site Background 95% Upper Threshold Limits Model Toxics Control Act Method B Guidelines for Inorganic Analytes

Analyte[a]	95% UTL[b] (mg/kg)	MTCA Method B[c] (mg/kg)
Alkalinity	23,300	N/L
Ammonia	28.2	N/L
Antimony	15.7[d]	32
Arsenic	8.92	24 (0.59)[e]
Barium	171	5,600
Beryllium	1.77	400 (0.23)[e]
Cadmium	0.66[d]	40
Chloride	763	N/L
Chromium	27.9	400[f]
Cobalt	19.6	N/L
Copper	28.2	3,200
Fluoride	12	4,800
Lead	14.75	U
Lithium	37.1	N/L
Manganese	612	400
Mercury	1.25	24
Molybdenum	1.4[d]	400
Nickel	25.3	1,600
Nitrate	199	130,000
Nitrite	21[d]	8,000
Ortho-phosphate	16	N/L
Selenium	5[d]	400
Silicon	192	N/L
Silver	2.7	400
Sulfate	1,320	N/L
Thallium	3.7[d]	5.6 - 7.2[g]
Titanium	3,570	N/L
Vanadium	111	560
Zinc	79	24,000
Zirconium	57.3	N/Lt

Source: *Hanford Site Background: Part 1, Soil Background for Nonradioactive Analytes*, DOE/RL-92-24, Rev. 1, Draft, U.S. Department of Energy, Richland, Washington.

NL = Not listed in Model Toxics Control Act (MTCA) Human Health Risk Based Method B Formula Values table for soil

U = Unavailable

[a] Analytes essentially non-toxic in soil are not listed (*Hanford Site Risk Assessment Methodology*, DOE/RL-91-45, Rev. 3, U.S. Department of Energy, Richland, Washington.). These include aluminum, calcium, iron, magnesium, potassium, sodium.

[b] 95% confidence limit of the 95th percentile of the data distribution

[c] Noncarcinogen risk-based concentration, no carcinogen risk except as shown in parenthesis

[d] Limit of detection

[e] Carcinogen risk-based concentration in parenthesis

[f] Hexavalent chromium

[g] Range of risk-based concentrations for thallium compounds

UTL = upper threshold limit

Table 5-3 IRM Recommendations for the 100-BC-2 High-Priority Sites

Waste Site	Qualitative Risk Assessment		Conceptual Model	Exceeds ARAR	Probable Current Impact to Groundwater	Potential for Natural Attenuation by 2018	IRM Candidate yes/no
	Low Frequency Scenario	EHQ > 1					
116-C-2A	NA	NA	Adequate	No	Yes	NA	Yes
116-C-2B	NA	NA	Adequate	No	Unknown [1]	NA	Yes
116-C-2C	High	Yes	Adequate	No	Unknown [1]	No	Yes
118-B-1, 118-B-2, 118-B-3, 118-B-4, 118-B-6, 118-C-1, 118-C-2, 118-C-4, 128-C-1, 132-C-1, 132-C-3 burial grounds							Yes

EHQ = Environmental hazard quotient calculated by the qualitative ecological risk assessment
NA = Not assessed due to contamination > 4.6 m (15 ft), which is the qualitative risk assessment depth cutoff
ARAR = Applicable or relevant and appropriate requirements, specifically the Washington State Model Toxics Control Act Method B concentration values for soils.
IRM = interim remedial measures
[1] = No up or downgradient monitoring wells to assess groundwater impact, site remains on IRM path

6.0 REFERENCES

Argonne, 1992, *RESRAD*, Version 4.3.5, Argonne National Laboratory, Argonne, Illinois.

Baker, D.A. and J.K. Soldat, 1992, *Methods for Estimating Doses to Organisms from Radioactive Materials Released into the Aquatic Environment*, PNL-8150, Pacific Northwest Laboratories, Richland Washington.

Beckstrom, J.F., 1985, *ARCL Calculations for Decommissioning the 117-C Filter Building*, UNI-3415, Rev. 1, UNC Nuclear Industries, Richland, Washington.

Beckstrom, J.F., 1986, *ARCL Calculations for Decommissioning the 116-C Stack*, UNI-3826, UNC Nuclear Industries, Richland, Washington.

Bergstrom, K.A., 1993, *Geophysical Investigation of 118-B-1 Burial Grounds, 100 B/C Area, Hanford Site, Washington*, WHC-SD-EN-TI-137, Westinghouse Hanford Company, Richland, Washington.

Burt, W.H. and R.P. Grossenheider, 1976, *A Field Guide to the Mammals*, Mifflin CO., New York.

Calder, W.A., 1984, *Size, Function, and Life History*, Harvard University Press, Cambridge, Massachusetts.

Cataldo, D.A. and R.E. Wildung, 1978, *Soil and Plant Factors Influencing the Accumulation of Heavy Metals by Plants*, Environmental Health Perspect, 27: 149-159.

Chatters, J.C., H.A. Gard, and P.E. Minthorn, 1992, *Fiscal Year 1991 Report on Archaeological Surveys of the 100 Areas, Hanford Site, Washington*, PNL-8143, UC-600, Pacific Northwest Laboratory, Richland, Washington.

Coughtrey, P.J., D. Jackson, C.H. Jones, P. Kand, and M.C. Thorne, 1983 and 1985, *Radionuclide Distribution and Transport in Terrestrial and Aquatic Ecosystems*, Vol. 1-6, A.A. Balkema Publishers, Rotterdan, Netherlands.

Digregorio, D., T. Kitchings and P. Van Voris, 1978, *Radionuclide Transfer in Terrestrial Animals*, Health Physics, 34: 3-31.

DOE, 1988, *Consultation Draft Site Characterization Plan*, DOE/RW-0164, Vols. 1-9, Office of Civilian Radioactive Waste Management, U.S. Department of Energy, Washington, D.C.

DOE, 1992, *Site-Wide Characterization Report, Fernald Environmental Management Project*, FEMP-SWCR-3, U.S. Department of Energy, Fernald Field Office, Fernald, Ohio.

DOE-RL 1991a, *Hanford Past-Practice Strategy*; Draft A, DOE/RL-91-40, U.S. Department of Energy, Richland Operations Office, Richland, Washington.

DOE-RL, 1991b, *Hanford Site Waste Management Units Report*, DOE/RL-88-30, Rev. 1, U.S. Department of Energy, Richland Operations Office, Richland, Washington.

DOE-RL, 1992a, *Remedial Investigation/Feasibility Study Work Plan for the 100-BC-1 Operable Unit*, Hanford Site, Richland, Washington, DOE/RL-90-07, Rev. 0, U.S. Department of Energy, Richland, Washington.

DOE-RL, 1992b, *Remedial Investigation/Feasibility Study Work Plan for the 100-BC-5 Operable Unit*, Hanford Site, Richland, Washington, DOE/RL-90-08, Rev. 0, U.S. Department of Energy, Richland, Washington.

DOE-RL, 1992c, *100 Area Feasibility Study, Phases 1 and 2*, Decisional Draft. DOE-RL-92-11, U.S. Department of Energy, Richland, Washington.

DOE-RL 1993a, *Remedial Investigation/Feasibility Study Work Plan for the 100-BC-2 Operable Unit*, Hanford Site, Richland, Washington; Rev. 0, DOE/RL-91-07, U.S. Department of Energy, Richland Operations Office, Richland, Washington.

DOE-RL, 1993b, *Limited Field Investigation Report for the 100-BC-5 Operable Unit*, DOE/RL-93-37, Decisional Draft, U.S. Department of Energy, Richland. Washington.

DOE-RL, 1993c, *Hanford Site Background: Part 1, Soil Background for Nonradioactive Analytes*, DOE/RL-92-24, Rev. 1, Draft, U.S. Department of Energy, Richland, Washington.

DOE-RL, 1993d, *Limited Field Investigation Report for the 100-BC-1 Operable Unit*, DOE/RL-93-06, Rev. 0, U.S. Department of Energy, Richland, Washington.

DOE-RL, 1993e, *Limited Field Investigation Report for the 100-HR-1 Operable Unit*, DOE/RL 93-51, Rev. 0, U.S. Department of Energy, Richland, Washington.

DOE-RL, 1994a, *Hanford Site Risk Assessment Methodology*, DOE/RL-91-45, Rev.3, U.S. Department of Energy, Richland, Washington

DOE-RL, 1994b, *Limited Field Investigation Report for the 100-FR-1 Operable Unit*, DOE/RL-93-82, WHC Internal Draft, U.S. Department of Energy, Richland, Washington.

DOE-RL, 1994c, *Limited Field Investigation Report for the 100-DR-1 Operable Unit*, DOE/RL-93-29, Rev. 0, U.S. Department of Energy, Richland, Washington.

Dorian, J.J., and V.R. Richards, 1978, *Radiological Characterization of the Retired 100 Areas*, UNI-946, United Nuclear Industries, Inc., Richland, Washington.

Ecology, EPA, and DOE-RL, 1990, *Hanford Federal Facility Agreement and Consent Order*, Washington State Department of Ecology, Olympia, Washington, U.S. Environmental Protection Agency, Region X, Seattle, Washington, and U.S. Department of Energy, Richland Operations Office, Richland, Washington.

9413293.3127

Ecology, EPA, and DOE-RL, 1991, *Hanford Federal Facility Agreement and Consent Order Change Packages*, May 16, 1991, Washington State Department of Ecology, Olympia, Washington, U.S. Environmental Protection Agency, Region X, Seattle, Washington, and U.S. Department of Energy, Richland Operations Office, Richland, Washington.

EPA, 1989, *Risk Assessment for Superfund: Volume 1, Human Health Evaluation Manual, Part A; Interim Final*, EPA/540/1-89/002, U.S. Environmental Protection Agency, Washington, D.C.

EPA, 1992, *Framework for Ecological Risk Assessment*, EPA/630/R-92/001, Risk Assessment Forum, Washington D.C.

EPA, 1993, *Health Effects Assessment Summary Tables: Annual FY-1993*, OHEAA/ECAO-CIN-909, March 1993, U.S. Environmental Protection Agency, Office of Emergency and Remedial Response, Washington, D.C.

Heid, K.R. 1956, *Unconfined Underground Radioactive Waste and Contamination - 100 Areas*, HW-46715, General Electric, Hanford Atomic Products Operation, Richland, Washington.

FEMP-SWCR-6 FINAL, 1993 *Site-Wide Characterization Report, Remedial Investigation and Feasibility Study*, Fernald Environmental Management Project, Fernald, Ohio.

IAEA, 1992, *Effects of Ionizing Radiation on Plants and Animals at Levels Implied by Current Radiation Protection Standards*, Technical Reports Series Nol 332, International Atomic Energy Agency, Vienna, Austria.

International Commission on Radiological Protection (ICRP), 1959, *Recommendations of the International Commission on Radiological Protection*, ICRP Publication 2 International Commission on Radiological Parameters, Pergamon Press, Oxford England.

Kytola, K.O., 1993, *Description of Work for the 100-BC-2 Vadose Borehole: 116-C-2A Crib*, WHC-SD-EN-AP-126, Rev. 1, Westinghouse Hanford Company, Richland, Washington.

Lindberg, J.W., 1993, *Geology of the 100-B/C Area, Hanford Site, South-Central Washington*, WHC-SD-EN-TI-133, Rev. 0, Westinghouse Hanford Company, Richland, Washington.

Miller, M.L., J.J. Fix, and P.E. Bramson, 1977, *Radiochemical Analyses of Soil and Vegetation Samples Taken from the Hanford Environs, 1971-1976*, BNWL-2249, Pacific Northwest Laboratory, Richland, Washington.

Miller R.L. and R.K. Wahlen, 1987, *Estimates of Solid Waste Buried in 100 Area Burial Grounds*, WHC-EP-0087, Westinghouse Hanford Company, Richland, Washington.

Mitchell, T.H., and K.A. Bergstrom, 1993, *Geophysical Investigation of the 118-C-1 Burial Ground, 100 B/C Area, Hanford Site Washington*, WHC-SD-EN-TI-138, Westinghouse Hanford Company, Richland, Washington.

PNL, 1989, *Hanford Cultural Resources Management Plan*, PNL-6942, Pacific Northwest Laboratory, Richland, Washington.

Reichle, D.E., P.D. Dunaway and D.J. Nelson, 1970, *Turnover and Concentration of Radionuclides in Food Chains*, Nucl. Saf. 11: 433.

Reidel, S.P., and K.R. Fecht, 1981, *Wanapum and Saddle Mountains Basalt in the Cold Creek Syncline Area*, in Subsurface Geology of the Cold Creek Syncline, RHO-BWI-St-14, Rockwell Hanford Operations, Richland, Washington.

Reidel, S.P. and P.R. Hooper, 1989, editors, "Volcanism and Tectonism in the Columbia River Flood Basalt Province," Special Paper 239, *Geological Society of America*, Boulder, Colorado, 386 p.

Rouston, R.C., and D.A. Cataldo, 1978, *A Growth Chamber Study of the Effect of Soil Concentration and Plant Age on the Uptake of Sr and Cs by Tumbleweed*, Communications in Soil Science and Plant Analysis, 9 (3).

Sackschewsky, M.R. and D.S. Landeen, 1992, *Fiscal Year 1991 100 Areas CERCLA Ecology Investigations*, WHC-EP-0448, Westinghouse Hanford Company, Richland, Washington.

Schleien, B., 1992, *The Health Physics and Radiological Health Handbook*, Scinta, Inc. 2421 Honestead Drive, Silver Spring MD. 20902.

Smith, G.A., 1988, *Neogene Synvolcanic and Syntectonic Sedimentation in Central Washington*, Vol 1. 100, pp. 1479-1492, Geological Society of America Bulletin, Boulder, Colorado.

9413293.3129

Stenner, R.D., K.H. Cramer, K.A. Higley, S.J. Jette, D.A. Lamar, T.J. McLaughlin, D.R. Sherwood, and N.C. VanHouten, 1988, *Hazard Ranking System Evaluation of CERCLA Inactive Waste Sites at Hanford,* PNL-6465, Pacific Northwest Laboratory, Richland, Washington.

Weiss, S. and R.M. Mitchell, 1992, *A Synthesis of Ecological Data from the 100 Areas of the Hanford Site,* WHC-EP-0601, Westinghouse Hanford Company, Richland, Washington.

WHC, 1988, *Environmental Investigations and Site Characterization Manual,* WHC-CM-7-7, Westinghouse Hanford Company, Richland, Washington.

WHC, 1990, *Sample Management Administration Manual,* WHC-CM-5-3, Westinghouse Hanford Company, Richland, Washington.

WHC, 1993a, *100-BC-5 Qualitative Risk Assessment,* WHC-SD-EN-RA-006, Rev. 0, Westinghouse Hanford Company, Richland, Washington.

WHC, 1993b, *Data Validation Report for the 100-BC-2 Vadose Investigation - 116-C-2A Pluto Crib,* WHC-SD-EN-TI-215, Rev. 0, Westinghouse Hanford Company, Richland, Washington.

WHC, 1993c, *100-BC-5 Qualitative Risk Assessment,* WHC-SD-EN-RA-006, Rev. 0, Westinghouse Hanford Company, Richland, Washington.

WHC, 1993d, *Qualitative Risk Assessment for the 100-KR-1 Source Operable Unit,* WHC-SD-EN-RA-009, Rev. 0, Draft, Westinghouse Hanford Company, Richland, Washington.

Whicker, F.W., and V. Schultz, 1982, *Radioecology: Nuclear Energy and the Environment,* Vol. II, CRC Press, Inc., Boca Raton, Florida.

9413293.3131

APPENDIX A

SPECTRAL GAMMA-RAY GEOPHYSICAL LOG

RLS Borehole Survey Report

Borehole 199-B9-4

Casing	Depth: 54.2'	Size: 8"	Thickness: 0.45"
Water	Depth: none		
Survey	Depth: 0 - 53'	Date: 07/19/93	
	Stations: 53.2'		

General Notes:
The well was monitored from 0 to 53 feet in increments of 0.5 feet for counting periods of 80 seconds,through an eight inch diameter, 0.45 inch thick carbon steel casing. In addition a stationary log was run at 53.2 feet for 300 seconds. Note that over the monitored region the well casing exceeds the maximum casing correction factor. Therefor the calculated activities will slightly underestimate the actual activities. The plot tracks shown on the first graph for the naturally occurring radionuclides, potassium, uranium, and thorium indicate that the calculated activities are typical for Hanford soils. The blank region on the potassium plot track from 21 to 24 is due to the interference of the Europium-152, 1458 keV photopeak with the Potassium-40, 1461 keV photopeak. This made the spectral data in this region unreliable, so it was removed from the plot track. At present it would require time consuming hand calculations to separate the contributions from these two radionuclides.

The man-made radionuclides observed over the monitored region of the well are Cobalt-60 (Co-60), Europium-152 (Eu-152), and Europium-154 (Eu-154). As shown on the second graph, all of these radionuclide activities occur in a narrow band centered at 22 feet. The total gamma ray count rate reflects the presence of these radionuclides.

Man-made Radionuclides:
Cobalt-60 is observed from 16.5 to 28.5 feet. The maximum calculated activity of 143 pCi/g occurs at 22 feet.

Europium-152 is observed from 16 to 26.5 feet. The maximum calculated activity of 377 pCi/g occurs at 22 feet.

Europium-154 is observed from 17.5 to 25 feet. The maximum calculated activity of 40 pCi/g occurs at 22 feet.

No other man-made radionuclides were observed.

9413293.3152

Westinghouse Hanford Company
RLS Spectral Gamma-Ray Borehole Survey Log Header

Project: 100 B/C Pu Crib

Borehole	199-B9-4	
Coordinates	NA N NA W	Feet (Hanford 200W Area)
Elevation	NA ft	Top of casing(Hanford 200W Area)

Borehole Environment Information

Borehole liquid depth none (ft) from zero (0.0) depth reference of log

Casing size (in.)	Casing thickness (in.)	Top depth (ft)	Base depth (ft)
8	0.45	0	54.2

RLS Passive Spectral Gamma Survey Information

Logging Engineers J. P. Kiesler S. E. Kos
Log depth reference at zero (0.0) depth is ground level

Log Date	Archive file names	Log mode speed	Depth interval (ft) Top	Base	Incr
Jul 19, 1993	H1B0904\A404	MSA 80sec RT	0	53	0.5
		Stations 300s	53.2		

MSA: Move-Stop-Acquire
RT: Real time

Calibration and Analysis Information

RLS Calibration Date: Nov. 21, 1991
Calibration Report: WHC-SD-EN-TRP-001

Analyst Names: W. F. Nicaise
Analysis Date: Oct 27, 1993

Analysis Notes:
Radionuclides Identified: Co-60, Eu-152, Eu-154

RLS Spectral Gamma-Ray Borehole Survey

Project: 100 B/C Pu Crib
Borehole: 199-B9-4

Log Date: Jul 19, 1993
Anal. Date: Oct 26, 1993

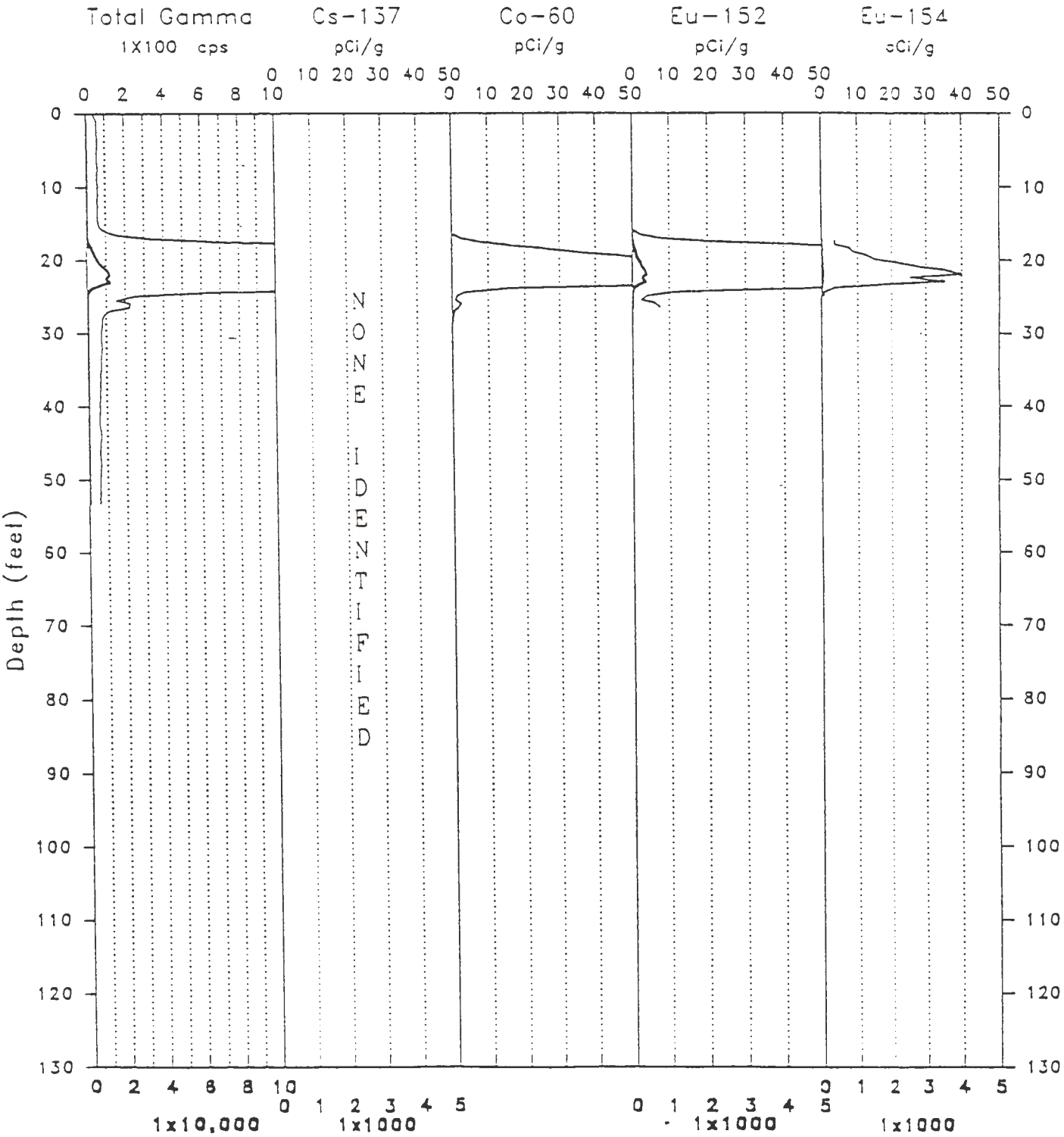

RLS Spectral Gamma-Ray Borehole Survey

Project: 100 B/C Pu Crib
Borehole : 199-B9-4

Log Date : Jul 19, 1993
Anal Date: Oct 26, 1993

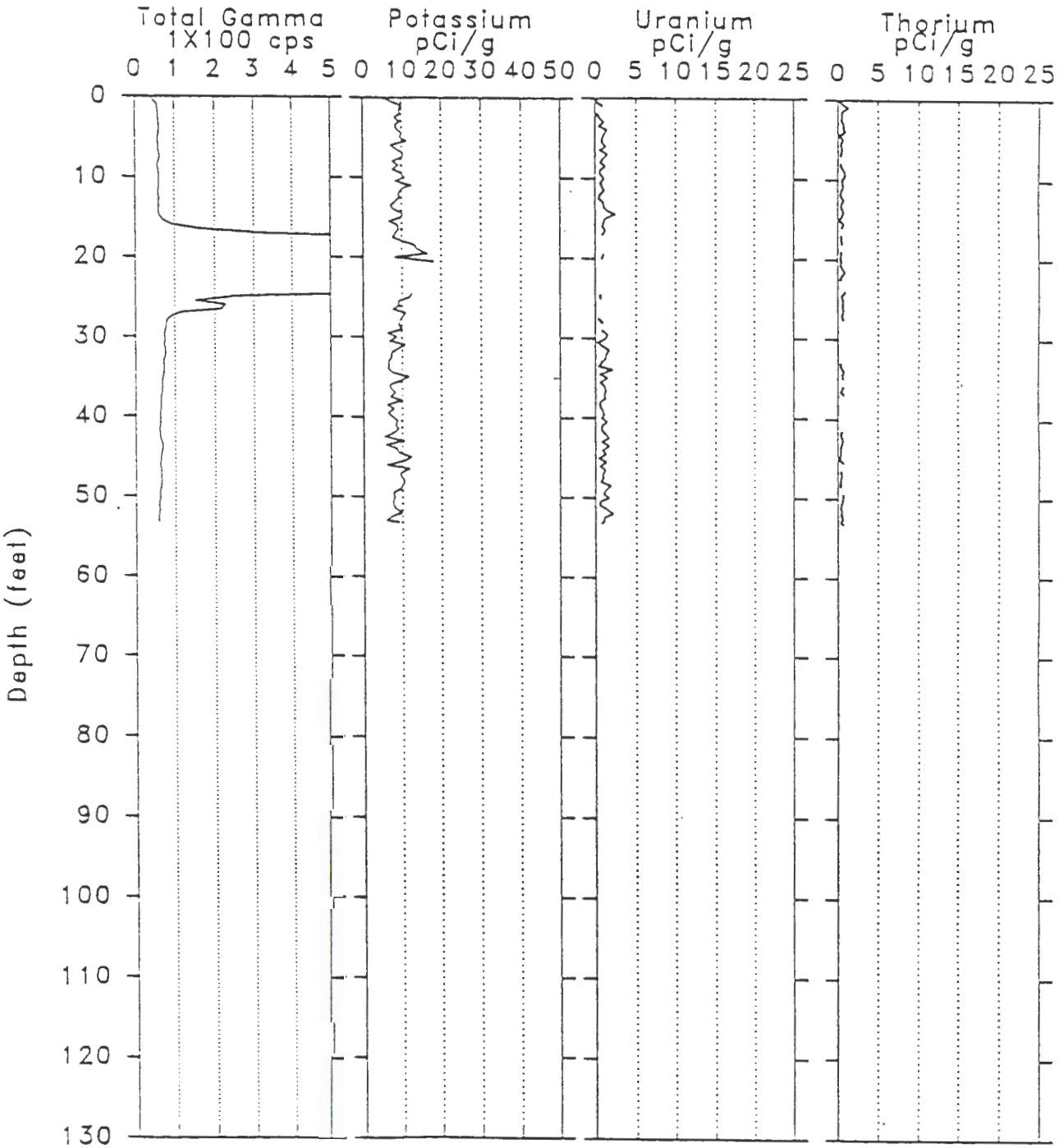

9413293.3135

9413293.3136

APPENDIX B

SUMMARY OF RADIONUCLIDE ANALYTICAL RESULTS AFTER DORIAN AND RICHARDS (1978)

Table B-1 Summary of Radionuclide Analytical Results for the Dorian and Richards (1978) Testholes: 116-C-2A Pluto Crib

Test Hole	A	B			C	D			E	Calculated
Sample		31 ft	35 ft	50 ft		25 ft	30 ft	35 ft	35ft	Average
Radionuclide (pCi/g)										
Tritium	NR	NA	6.9	NA	NR	NA	23	NA	130	53
Cobalt-60	NR	1.6	2	0.18	NR	7.9	14	2.2	1.1	4.1
Strontium-90	NR	110	180	38	NR	15	230	170	170	130
Cesium-134	NR	NA	NA	NA	NR	*	0.069	0.075	NA	0.021
Cesium-137	NR	0.11	0.14	0.069	NR	0.15	0.13	0.069	0.084	0.11
Europium-152	NR	0.46	1.1	*	NR	1.4	5.4	1.2	0.63	1.5
Europium-154	NR	*	0.44	*	NR	*	0.27	*	NA	0.1
Europium-155	NR	2.1	1.8	1.1	NR	0.095	2.2	1.9	2	1.5
Total Uranium	NR	NA	0.11	NA	NR	NA	NA	NA	NA	0.11

*: Below detection limit
NA: Not analyzed for
NR: Not reported

Table B-2 Summary of Radionuclide Analytical Results for the Dorian and Richards (1978) Testholes: 116-C-2B Pluto Crib Pump Station

Test Hole Sample Radionuclide (pCi/g)	A 30 ft
Tritium	48
Cobalt-60	0.54
Strontium-90	2.2
Cesium-134	0.25
Cesium-137	0.24
Europium-152	4.5
Europium-155	0.52
Plutonium-239/240	0.42

9413293.3138

Table B-3 Summary of Radionuclide Analytical Results for the Dorian and Richards (1978) Testholes: 116-C-2C Pluto Crib Sand Filter

Test Hole	A		B	C	D	Grab [a]				Calculated
Sample	25 ft	30 ft		22.5 ft		1	2	3	4	Average
Radionuclide (pCi/g)										
Tritium	93	NA	NR	NA	NR	220	NA	NA	52	73
Cobalt-60	490	42	NR	180	NR	7100000	120000	83000	100000	37000
Strontium-90	14	22	NR	12	NR	29000	NA	NA	NA	360
Cesium-134	7.7	12	NR	0.43	NR	NA	NA	NA	NA	65
Cesium-137	280	87	NR	160	NR	140000	4900	5700	2100	1700
Europium-152	53	710	NR	270	NR	NA	NA	2000	NA	1300
Europium-154	3.3	41	NR	37	NR	NA	NA			100
Europium-155	*	900	NR	12	NR	NA	NA			1100
Plutonium-238	0.77	*	NR	NA	NR	1600	NA	NA	NA	19
Plutonium-239/240	7.9	0.97	NR	1.1	NR	1500	NA	NA	NA	19
Total Uranium	0.13	NA	NR	NA	NR	NA	NA	NA	NA	NA

*: Below detection limit

NA: Not analyzed for

[a]: Locations of the grab samples are as follows;

1) Crud from inlet distribution tray, approximately 3 ft below surface
2) Crud from outlet distribution tray, approximately 19 ft below surface
3) Inlet filter bed
4) Outlet filter bed

NR: Not reported

Table B-4 Summary of Radionuclide Analytical Results for the Dorian and Richards (1978) Testholes: 118-B-1 Burial Ground

Test Hole	A	B	C	D	E	F	G		
Trench	1,2 or 4	1,2 or 4	1,2 or 4	1,2 or4	1,2 or4	1,2 or4	7		
Radionuclide (pCi/g)									
Sample	20 ft						15 ft	22 ft	22.5 ft
Cobalt-60	0.07	NR	NR	NR	NR	NR	34	170000	99
Nickel-63	NA	NR	NR	NR	NR	NR	NA	32	NA
Strontium-90	0.026	NR	NR	NR	NR	NR	0.1	0.6	0.57
Cesium-134	NA	NR	NR	NR	NR	NR	NA	NA	NA
Cesium-137	0.039	NR	NR	NR	NR	NR	0.54	2700	1.4
Europium-152	NA	NR	NR	NR	NR	NR	0.46	4500	13
Europium-154	NA	NR	NR	NR	NR	NR	0.66	2700	0.93
Europium-155	0.4	NR	NR	NR	NR	NR	0.065	600	*
Plutonium-239/240	NA	NR	NR	NR	NR	NR	NA	NA	NA
Total Uranium	NA	NR	NR	NR	NR	NR	NA	NA	NA
Nonradionuclide									

Test Hole	H		I	J		K	L	M			N
Trench	13		13	13		P-2	?12?	northern			northern
Radionuclide (pCi/g)											
Sample	20 ft	33 [a]		25 ft	30.5 ft			20 ft	25 ft	32 ft	20 ft
Cobalt-60	110	8200	NR	91	350	NR	NR	*	5200	380	
Nickel-63	NA	NA	NR	NA	NA	NR	NR	NA	78	NA	
Strontium-90	0.61	NA	NR	0.09	0.023	NR	NR	0.19	140	6.2	
Cesium-134	*	13	NR	*	0.28	NR	NR	64	*	*	
Cesium-137	1.3	120	NR	*	1.3	NR	NR	66	49	5.3	
Europium-152	1.9	3100	NR	2.3	0.79	NR	NR	83	28	5.4	
Europium-154	2.7	380	NR	0.63	1.8	NR	NR	450	2500	7.8	
Europium-155	1.6	18	NR	1.8	0.56	NR	NR	48	7.5	3	
Plutonium-239/240	NA	NA	NR	*	0.42	NR	NR	0.28	0.59	1	
Total Uranium	NA	NA	NR	NA	NA	NR	NR	NA	0.16	NA	
Nonradionuclide								NA	NA	NA	
											Oil & grease

*: Below detection limit
NA: Not analyzed for
[a]: Sample H-33 was a perforated aluminum fuel element spacer (dummy) found 20 ft. east of trench #7; it was not a sample taken from 33 ft below grade at this location.
NR: not reported