Attachment 51 – Appendix 8.7
Pretreatment Building
Specifications

Where information regarding treatment, management, and disposal of the radioactive source, byproduct material, and/or special nuclear components of mixed waste (as defined by the Atomic Energy Act of 1954, as amended) has been incorporated into this permit, it is not incorporated for the purpose of regulating the radiation hazards of such components under the authority of this permit and chapter 70.105 RCW. In the event of any conflict between Permit Condition III.10.A. and any statement relating to the regulation of source, special nuclear, and byproduct material contained in portions of the permit application that are incorporated into this permit, Permit Condition III.10.A. will prevail.

Additional appendices will be added to this appendix as new information is incorporated into this permit.

Drawings and Documents

Attachment 51 – Appendix 8.7
Pretreatment Building Specifications

The following drawings have been incorporated into Appendix 8.7 and can be viewed at the Ecology Richland Office. See Appendix 7.7 for specification documents common to the Pretreatment, LAW, HLW, and Laboratory buildings. **New drawings are in bold lettering.**

Drawing/Document Number	**Description**
24590-PTF-3PS-MEVV-TP001, Rev 2	Engineering Specification for Forced Circulation Vacuum Evaporator System
24590-PTF-3PS-MEVV-TP002, Rev 0	Engineering Specification for Cesium Nitric Acid Recovery Forced Circulation Vacuum Evaporator System
24590-PTF-3PS-MKAS-T0001, Rev 1	**Engineering Specification for PTF Vessel Vent Caustic Scrubber**
24590-PTF-3PS-MLFP-TP001, Rev 1	Engineering Specification for Ultrafilters
24590-PTF-3PS-MPC0-T0001, Rev 0	Engineering Specification for PTF Hot Cell Slurry Pumps to Meet Requirements of API Standard 610, Eighth Edition
24590-PTF-3PS-MWD0-TP003, Rev 1	Engineering Specification for RDP Spent Resin Dewatering Equipment Package
24590-WTP-3PS-MV00-TP001, Rev 1	Equivalency Specification for Vessel Design & Fabrication
RESERVED	RESERVED

R10660923

RIVER PROTECTION PROJECT – WASTE TREATMENT PLANT

ENGINEERING SPECIFICATION

FOR

Forced Circulation Vacuum Evaporator System

ERIC B. ISERN
STATE OF WASHINGTON
33449
REGISTERED
PROFESSIONAL ENGINEER
12/15/05
EXPIRES: 07/28/07

This bound document contains a total of 197 pages.

Content applicable to ALARA? ☒ **Yes** ☐ **No**

ADR No.
N/A

Rev
N/A

ISSUED BY
RPP-WTP PDC

Quality Designator
QL
DOE Contract No. DE-AC27-01RV14136

NOTE: Contents of this document are Dangerous Waste Permit affecting.

REV	DATE	BY	CHECK	REVIEW	E&NS	QA	DPEM
2	12/27/05	[signature]	E HAN [signature] E. LE [signature]	[signature]	N/A	N/A	[signature]
1	10/13/03	E. Le	G. Butt	N/A	N/A	N/A	S. Grabowski
0	10/30/02	J. Jackson	E. Le	N/A	N/A	N/A	S. Kirk

SPECIFICATION No.
24590-PTF-3PS-MEVV-TP001

Rev
2

24590-G04B-F00009 Rev 9 (8/1/2005)

Ref: 24590-WTP-3DP-G04B-00049

Revision History

Revision	Reason for Revision
0	Issued for Permitting Use
1	Issued for Permitting Use
2	Issued for Permitting Use

Notice

Please note that source, special nuclear, and byproduct materials, as defined in the Atomic Energy Act of 1954 (AEA), are regulated at the US Department of Energy (DOE) facilities exclusively by DOE acting pursuant to its AEA authority. DOE asserts, that pursuant to the AEA, it has sole and exclusive responsibility and authority to regulate source, special nuclear, and byproduct materials at DOE-owned nuclear facilities. Information contained herein on radionuclides is provided for process description purposes only.

Contents

Notice iii
1 Scope 1
1.1 Project Description and Location 1
1.2 Equipment, Material, and Services Required 1
1.3 Work by Others 8
1.4 Definitions 11
1.5 Mechanical Data Sheets 14
1.6 Safety/Quality Classifications 15
2 Applicable Documents 15
2.1 General 15
2.2 Codes and Industry Standards 15
2.3 Reference Documents 17
2.4 Reference Drawings / Data Sheets 18
3 Design Requirements 23
3.1 General 23
3.2 Basic Function 26
3.3 Performance 27
3.4 Design Conditions 28
3.5 Environmental Conditions 30
3.6 Feed Pumps 31
3.7 Recirculation Pumps 32
3.8 Concentrate Pumps 33
3.9 Reboilers 34
3.10 Evaporator Separator Vessels 36
3.11 Primary Condensers 37
3.12 Secondary Condenser System 38
3.13 Evaporator Process Condensate Vessels & Pumps 39
3.14 Antifoam Skid and FEP/TLP Reboiler Condensate Transfer Stations 40
3.15 Mechanical Handling Requirements 41
3.16 Loadings 42
3.17 Electrical Requirements 43
3.18 Instrumentation and Control Requirements 43
3.19 Lifting Requirements 45

Contents

3.20 Accessibility and Maintenance 45
4 Materials 47
4.1 Positive Material Identification 47
4.2 Construction 47
4.3 Vessels 49
4.4 Pipework 49
4.5 Prohibited Materials 49
4.6 Storage of Special Materials (e.g., stainless steel) prior to work 49
5 Fabrication 50
5.1 General 50
5.2 Welding 50
6 Inspections and Examinations 51
6.1 Nondestructive Examinations 51
6.2 Dimensional Inspections 51
6.3 Visual Weld Inspections 52
6.4 Liquid Penetrant Test 52
6.5 Radiography 53
6.6 Magnetic Particle Examination 53
6.7 Final Inspection 54
6.8 Inspection and Test Status 54
6.9 Control of Nonconforming Items 54
7 Testing 54
7.1 Shop Tests 54
7.2 Integrated Acceptance Tests 55
8 Preparation for Shipment 56
8.1 General Requirements 56
8.2 Painting 57
8.3 Tagging 59
9 Quality Assurance 60
9.1 General Commercial Designation (CM) Requirements 60
9.2 Quality Level (QL) Requirements 60
10 Configuration Management 61
11 Documentation and Submittals 61

Contents

11.1 General 61
11.2 Calculations 62
11.3 As-Built Drawings 62
11.4 Dimensional Record Drawings 62
11.5 Project Start 63
11.6 30 % Design Review 63
11.7 60 % Design Review 63
11.8 90 % Design Review 64
11.9 Final Design Review 69

Appendices

A Waste Feed Evaporator Stream Data A-1
B Treated LAW Evaporator Stream Data B-1
C Predicted Maximum Radionuclide C-1
D Evaporator Process Data D-1
E Quality Level and Seismic Category for Evaporator Equipment E-1
F Separator Vessel Skid Support Layout F-1
G Hot Cell Remote Impact Wrench G-1
H Deleted H-1
I FEP Evaporator Equipment Skids Location and Layout Sketches I-1
J TLP Evaporator Equipment Skids Location and Layout Sketches J-1
K Antifoam Equipment Skid Location and Layout Sketches K-1
L Reboiler Steam Condensate Transfer Station Location and Layout Sketches L-1
M In-Structure Acceleration Response Spectra (ISRS) Input for SC-I/SC-II Equipment M-1
N Deleted N-1
O Nondestructive Examination (NDE) of Fabricated Pipe Welds O-1

P Reboiler Skids and Preliminary Nozzle Loads at Grayloc Connections.....P-1

Q Reboilers and Recirculation Pumps Layout.....Q-1

R ISRS Figures for Reboilers at the Steel Frame Supports.....R-1

S Manufacturers Standard Coating Data Sheet S-1

T Design Evolution Inputs.....T-1

1 Scope

1.1 Project Description and Location

The Hanford Tank Waste Treatment and Immobilization Plant (WTP) is a complex of waste treatment facilities where the US Department of Energy (DOE) Hanford Site tank waste will be pretreated and immobilized into stable glass form via vitrification. The WTP Contractor will design, build, and startup the WTP pretreatment and vitrification facilities for the DOE Office of River Protection (ORP). The waste treatment facilities will pretreat and immobilize the low-activity waste (LAW) and high-level waste (HLW) currently stored in underground storage tanks at the Hanford Site.

The Hanford Site occupies an area of about 560 square miles and is located along the Columbia River, north of Richland, WA in the U.S.A. The WTP Facility will be constructed at the east end of the 200 East Area of the Hanford Site. The counties of Benton, Franklin, and Grant surround the Hanford Site.

1.2 Equipment, Material, and Services Required

This specification provides the requirements for the design, analysis, fabrication, quality assurance, inspection, testing, qualification, and labeling of three (3) forced circulation vacuum evaporator systems for use in the WTP Pretreatment Facility. This specification also provides the requirements for the supply of services, manuals, instructions, procedures, and other associated documentation.

The scope of work for the Seller includes all work defined in this specification and its addenda and attachments. Work shall include, but is not limited to, the following:

1.2.1 Provide fully detailed designs, drawings, diagrams, supporting calculations, supporting analyses, procedures, installation instructions, and all labor, materials, equipment, and services necessary to manufacture, test, inspect, label and package for shipment three (3) sets of the forced circulation vacuum evaporator system hardware, including handling and servicing equipment, all fabricated to appropriate NQA-1 requirements in accordance with all specification requirements, with the deliverables being reports, calculations, procedures, data sheets, drawings and diagrams as outlined in this specification and the Material Requisition (MR). Refer to tables below for what shall be included as part of evaporator systems to be provided.

Waste Feed Evaporator (FEP) Systems

Equipment	Tag
Two (2) FEP Separator Vessels. Each vessel with support structure, three layers of de-entrainment trays, two layers of mesh pads and sprays.	FEP-SEP-00001A FEP-SEP-00001B
Two (2) FEP Reboilers with Graylocs and PUREX nozzles installed in accordance with this specification and stainless steel structural support frames.	FEP-RBLR-00001A FEP-RBLR-00001B
Two (2) FEP Recirculation Pumps. Each pump includes motor, pump seals, and adjustable speed drive. The pump inlet and outlet pipe ends prepared for butt welding.	FEP-PMP-00009A FEP-PMP-00009B
Two (2) FEP Condenser skid. Each skid consisting of Primary Condenser, 1st stage steam ejector, Intercondenser, 2nd stage steam ejector, Aftercondenser and interconnecting piping.	FEP-COND-00001A FEP-COND-00002A FEP-COND-00003A FEP-EJCTR-00040 FEP-EJCTR-00041 FEP-COND-00001B FEP-COND-00002B FEP-COND-00003B FEP-EJCTR-00042 FEP-EJCTR-00043
One (1) FEP Condensate Vessel for both FEP systems. Vessel includes skirt and support ring.	FEP-VSL-00005
Two (2) FEP Condensate Pumps include base plate, motor, variable speed drive, and mechanical seal mounted on common skid.	FEP-PMP-00006A FEP-PMP-00006B
One (1) Antifoam Vessel serves the FEP and TLP separators. Vessel includes skirt.	AFR-TK-00001
Three (3) Antifoam Pumps (common for FEP and TLP systems) with base plate and motor mounted on common skid.	AFR-PMP-00006 AFR-PMP-00007 AFR-PMP-00008
Two (2) sets of FEP offgas piping 30" diameter from separator to Primary condenser. Piping includes pipe hangers.	"Note 1"
Two (2) FEP Steam Conditioning Assembly consisting of a steam supply flow control valve, desuperheater and flow element.	FEP-SKID-00006A FEP-SKID-00006B
Four (4) lifting yokes. One lifting yoke for three (3) separator vessels, two lifting yokes for three (3) reboiler and support frame assemblies, and one lifting yoke for three (3) recirculation pumps	"Note 1"
Two (2) FEP Reboiler Steam Condensate Transfer Stations including level tank, transfer pump and condensate recycle pump.	FEP-VSL-00021 FEP-PMP-00010A FEP-PMP-00010B FEP-VSL-00022 FEP-PMP-00011A FEP-PMP-00011B

Note 1: Stainless steel or plastic tags (foil strip is not acceptable) shall be firmly attached by stainless steel wire or stainless steel screws to each separate item. Each tag shall be stamped with, as a minimum: (1) Purchase Order Number, (2) Purchase Order item number, and (3) Equipment/Instrument Tag number.

Treated LAW Evaporator (TLP) System

Equipment	Tag
One (1) TLP Separator Vessel with support structure, three layers of de-entrainment trays, two layers of mesh pads and sprays.	TLP-SEP-00001
One (1) TLP Reboiler with Graylocs and PUREX nozzles installed in accordance with this specification and stainless steel structural support frame.	TLP-RBLR-00001
One (1) TLP Recirculation Pump including motor, pump seals, and adjustable speed drive. The pump inlet and outlet pipe ends prepared for butt welding.	TLP-PMP-00001
Two (2) LAW SBS Feed Pumps with base plate, motor, pump seals, and adustable speed drive.	TLP-PMP-00005A TLP-PMP-00005B
Two (2) TLP Concentrate Pumps with base plate, motor, pump seals, and adjustable speed drive.	TLP-PMP-00011A TLP-PMP-00011B
One (1) TLP Condenser skid consisting of Primary Condenser, 1st stage steam ejector, Intercondenser, 2nd stage steam ejector, Aftercondenser and interconnecting piping.	TLP-COND-00001 TLP-COND-00002 TLP-COND-00003 TLP-EJCTR-00064 TLP-EJCTR-00067
One (1) TLP Condensate Vessel with support.	TLP-VSL-00002
Two (2) Condensate Pumps include base plate, motor, variable speed drive, and mechanical seal mounted on common skid.	TLP-PMP-00002A TLP-PMP-00002B
One (1) set of offgas piping 30" diameter from Separator to Primary Condenser with pipe hangers.	"Note 1"
One (1) TLP steam conditioning Assembly consisting of a steam supply flow control valve, a desuperheater and flow element.	TLP-SKID-00008
One (1) TLP Reboiler Steam Condensate Transfer Station including level tank, transfer pump and condensate recycle pump.	TLP-VSL-00047 TLP-PMP-00012A TLP-PMP-00012B

Note 1: Stainless steel or plastic tags (foil strip is not acceptable) shall be firmly attached by stainless steel wire or stainless steel screws to each separate item. Each tag shall be stamped with, as a minimum: (1) Purchase Order Number, (2) Purchase Order item number, and (3) Equipment/Instrument Tag number.

1.2.2 Provide a guarantee that all equipment listed in section 1.2.1 will perform in accordance with the requirements of this specification and all referenced codes, standards, and documentation in section 2 of this specification. Process warranty shall include demonstration of compliance of the Seller's provided evaporator system during testing per section 7.2 of this specification with the boil-off and decontamination factor requirements. The process warranty is provided with the following conditions: (1) the evaporator systems are operated per Seller's instructions within mutually agreed parameters and chemical analytes that are representative of waste and process conditions, and (2) mutual agreement that foaming within the Separator Vessel is adequately controlled by the Buyer-supplied antifoaming reagent.

1.2.3 Perform sizing calculations and process performance modeling to ensure that each component of the evaporator systems is properly specified to ensure desired performance.

1.2.4 Provide the following nonreplaceable components/equipment which shall attain a 40-year life:

- Separator vessels and all their internal parts (exception made for demister pad life).
- Section of separator offgas pipework located inside the R5/C5 black cells.

1.2.5 Deleted.

1.2.6 Provide three (3) steam conditioning equipment skids necessary to reduce plant low-pressure steam of 40 psig and 286 °F to Seller's provided optimal saturated steam condition for reboiler operation. Provide specifications (i.e pipe diameter, associated equipment and layout) for reboiler shell vacuum/vent line.

1.2.7 Provide specifications and data sheets during contract performance for Buyer to procure the following equipment/components.

- FEP feed pumps (FEP-PMP-00007A/B)
- FEP concentrate pumps (FEP-PMP-00008A/B)

1.2.8 Provide evaporator skids, equipment, components, and structural supports with the materials of construction as specified per this specification and on the attached data sheets in section 2 of the MR. The structural supports for evaporator equipment shall match with Buyer's provided embed layout.

1.2.9 Provide evaporator systems that accommodate the wall penetrations, piping layout, equipment dimension envelopes, and equipment locations as specified in Appendices H, I, and J.

1.2.10 Provide stainless steel skid framing to match Buyer embed plates for all three separator vessels. The vessel skid shall conform to the proposed skid layout dimensions shown in the Appendix F.

1.2.11 Provide below-the-hook lifting devices for installation, commissioning, and operation/maintenance of the demister pads assembly, reboiler, and recirculation pump. These will include lifting yokes, beams, fixtures, etc., according to Buyer design constraints for remote handling, which will be provided in 30 % design review stage. Seller is also to provide all special lifting equipment required for installation and maintenance of the evaporator systems.

1.2.12 Provide seismic analysis for evaporator structures, systems, and components. Seismic analysis shall also be performed for reboiler and support frame assemblies. Seismic model shall include: (1) vessel/equipment, (2) skid frames, and (3) supporting posts. For post/embeds locations and details, see drawings 24590-PTF-DD-S13T-00023 thru -0030, 24590-PTF-DD-S13T-00049, 24590-PTF-SS-S15T-00311 thru -00318, 24590-PTF-SS-S15T-00352, and 24590-PTF-SS-S15T-00354. For recirculation pumps, design inputs such as allowable loads,

acceleration, interface points shall be provided for Buyer to perform structural analysis. Seismic response spectra for the reboilers at the steel frame supports are provided in Appendix R. The structural analysis will include dynamic loading resulting from seismic excitation while the vessel is operating under normal operating conditions. Buyer will provide the appropriate seismic response spectra and damping values for the performance of the seismic analysis. The seismic qualification of the evaporator systems equipment and components including their anchorage to the facility structure shall be accomplished using either Equivalent Static Analysis or Dynamic Analysis based on the characteristics and complexity of the equipment/components.

1.2.13 Provide the thermal and static stress analyses for the evaporator structures, systems, and components. Seller shall also provide fatigue analysis to support a 40 year design life for the evaporator system. The fatigue analysis shall include all calculations and all supporting data. Buyer will provide the necessary cyclic data for Seller to perform an assessment regarding the fatigue life of the equipment. However, Seller will be responsible for confirmation that the cyclic data has been accurately interpreted before proceeding with the component fatigue analysis.

1.2.14 Identify all interfaces and requirements for external connections with equipment and services supplied by the Buyer. The interface system data parameters for use in each of the evaporator systems shall include, as a minimum, the following:

Inlet Conditions:

- Feed (flow rate @ 77 °F)
- High pressure steam (mass flow rate @ 109 psig)
- Low pressure steam (mass flow rate @ 40 psig)
- Service Water (flow rate)
- Antifoam (flow rate)
- Instrument air (flow rate @ pressure)
- Cooling water (flow rate @ 75 °F)
- Operating electrical (kW)
- Installed electrical (kW)

Outlet Conditions:

- Steam Condensate (volumetric flow rate & temperature)
- Process Condensate (volumetric flow rate & temperature)
- Vent System (mass flow rate & temperature)
- Concentrate waste (volumetric flow rate & temperature)

1.2.15 Provide completed Instrument and Mechanical data sheets for all instruments and equipment in the 60 % design review package, utilizing Buyer's supplied instrument data sheet samples attached in the section 2 of the MR as templates. Buyer will procure the required instruments as detailed by the Seller's control philosophy documents (data sheets) for installation by others. Instrumentation shall conform to 24590-WTP-3PS-JQ07-T0001. Seller's design may differ from

the Buyer proposed evaporator Piping and Instrumentation sketches in Appendix L of this specification.

1.2.16 Provide the following for instrumentation and controls of Seller's supplied evaporator systems, equipment, and components to support Seller's software development. Any effect that the evaporator control strategy has on equipment operating parameters (i.e., pump flow rates, line flushes, feed and concentrate takeoff strategies, temperature, or pressure) will be mutually agreed upon prior to being implemented into the design.

- P&IDs
- Instrument data sheets
- Instrument loop diagrams
- Instrument location diagrams
- Control philosophies
- Functional descriptions
- Installation details
- Instrument index which includes functional test and operational set points
- Control and sequencing requirements
- Instrumentation and controls for the FEP evaporator feed and concentrate systems.

1.2.17 Provide a reliability analysis and documentation for each of the three (3) evaporator systems in accordance with the following:

1.2.17.1 A complete Failure Modes and Effects Analysis (FMEA) shall be performed on all the equipment that falls within Seller's scope of supply. This shall include associated components such as vessels, remote handling equipment, pumps have associated valves, (for isolation, for maintenance, for cross-ties, etc.) that have electronic control system which are used for process variability (e.g., flow rate). All support systems (e.g., power, air, water, steam, etc.) will be assumed to be 100 % reliable and will not be considered in the FMEA. Structural failure modes will be limited to seismic events, based on whatever seismic analyses have been performed to support the design. The FMEA shall follow in MIL-STD-1629A as close as possible. The equivalent standard actually used to perform the FMEA shall be provided as a reference (including version and year) at the 60 % design review. Also, an explanation shall be included to demonstrate how the standard has been applied. Failure modes for a reboiler are at least as follows: (1) pin hole, (2) crack, and (3) tube rupture. In addition, Seller shall indicate the possibility of the reboiler tube rupture without precursor of pin hole or crack. Determination of the possibility of reboiler tube rupture without a precursor of a pin hole or crack can be made with a qualitative argument based on fracture mechanics. No stress analysis or fracture mechanics calculations will be required to support the qualitative assessment. Failure modes for the remaining components covered

by the FMEA shall be as determined by the Seller; however, the basis for the failure mode shall be specified.

1.2.17.2 Failure rate data for the purposes of an availability assessment (performed by Seller) will be derived using the following hierarchy:

- Supplier In-Service Data
- In-Service Data of similar equipment, preferably in similar applications
- Generic Documented Failure Rate Data – data taken from recognized data sources, e.g., Dexter & Perkins, NPRD 1995, etc.

The specific data source shall be provided at the 60 % design review

1.2.17.3 A maintainability analysis will be undertaken in concert with the Buyer. The analysis will address preventative and corrective maintenance activities and estimate the required maintenance for the reboiler and appurtenances.

1.2.17.4 A recommended spare parts list, operations manuals, and maintenance manuals shall be provided.

1.2.17.5 Assume operations are 8,760 operating hours per year.

1.2.18 Provide an analysis of operating life for separator vessel, including its internal demister pads, separation trays, and feed distribution, reboiler, and recirculation pump. Justify all assumptions and references.

1.2.19 Provide structural support requirements and recommended support locations for recirculation pumps (i.e., load points, weight distribution, and maximum weight, geometry of equipment, and location of center gravity). In addition, identify areas that cannot be used as load points. Equipment support locations shall be mutually agreed with the Buyer due to remote handling requirements in the hot cell.

1.2.20 Provide design and fabrication of three support frames for reboilers. The support frame shall be welded to the reboiler and designed to force the thermal expansion of all nozzles (PUREX and remote clamp connectors) upward. Upper support points can be maintained for a lateral guide support. The structural supports for reboiler shall meet BNI remoteability requirements such as weight, remotely removable, airlock sizing, crane and impact wrench specified in this document.

1.2.21 Nozzles shall be located to ± 1/4 inch diametric tolerance by the hole in support frame as relative to the master dowel of the reboiler and support frame assembly. Nozzles shall be perpendicular / parallel within 0.5 degree or 1/4 inch whichever is smaller relative to the datum formed by the lower base plate of the reboiler and support frame assembly.

1.2.22 For reboiler nozzle locations, see Appendix P. Nozzles shall be located in accordance with 1.2.21.

1.2.23 Provide demonstration and recorded VHS format video tape for demister pad removal and replacement in Seller shop test. Buyer shall be notified prior to demonstration.

1.2.24 Provide radiographic film with technique and reader sheets. Exposed film must be sent, along with a copy of the technique and reader sheets in accordance with section 3 of the MR. Film must be suitably packaged to preclude moisture and handling damage.

1.2.25 Provide any necessary special remote repair tools for the reboiler and support frame assemblies and recirculation pumps. Special tools shall not include tools readily available in the commercial market. Also, provide a list of commercially available tools needed.

1.2.26 Provide final inspection of completed vessels. Buyer will not be designating a representative to carry out final inspections of the vessels as described per Buyer specification 24590-WTP-3PS-MV00-TP001, *Pressure Vessel Design and Fabrication.*

1.2.27 Provide personnel to perform dimensional measurements for reboiler and support frame assembly, and recirculation pumps at the Seller's shop.

1.2.28 Provide certified reports for all components subject to any heat treatment during manufacture.

1.2.29 Provide procedures suggesting how the integrated testing of evaporator system functionality be conducted by Buyer at the Hanford jobsite per section 7.2 of this specification. Technical support for installation, testing and commissioning will be under a separate contract.

1.2.30 Provide design documents in progressively complete package form. Design reviews at 30 %, 60 %, 90 % and Final Design to resolve all outstanding issues are planned to include face-to-face discussions between Buyer's personnel and Seller's personnel at Buyer's location. Future meetings will be arranged after Design Review Package Materials have been reviewed and meeting agenda have been established. The discussions are intended to help establish/clarify interface points in system requirements, review design/design progress, design documents, exchange ideas/information, provide design direction. See G-321-E Form for document submittal requirements.

1.3 Work by Others

Any item not specifically listed as being supplied by the Buyer shall be provided by the Seller.

1.3.1 Provide installation labor.

1.3.2 Provide equipment shipment, unloading and storage at Buyer's site.

1.3.3 Provide Instrumentation and controls (including installation). Provide Buyer internal standards for digital control system equipment and will specify and procure the control system equipment based on the necessary I/O requirements detailed by Seller.

1.3.4 Instrument location information for instrument location drawings.

1.3.5 Generate control logic in Buyer standard format using the final control loop definitions, system interlocks and alarms, system control philosophies, and control and sequencing requirements provided by Seller.

1.3.6 Procure the digital control system components. Buyer will provide the "Device" and "I/O" address of the serial communications link for each instrument for inclusion in the Instrument Index.

1.3.7 Perform the inspection of dimensional measurement activities for separator vessels, reboilers, and recirculation pumps.

1.3.8 Perform remote handling verification test for reboilers and support frame assemblies, recirculation pumps, and recirculation pipework jumper functionality at Buyer site. Lift tests shall be performed per section 3.19.8 by Seller prior to shipment.

1.3.9 Provide the appropriate seismic response spectra and damping values for Seller to perform the evaporator equipment skid (including reboiler and support frame assemblies) seismic analyses.

1.3.10 Provide video/camera systems for the Seller's provided demister pad removal systems.

1.3.11 Provide heat tracing, seismic review, and any necessary uninterruptible power supplies.

1.3.12 Provide all the piping, instrumentation and controls for the antifoam systems per Seller design and specification.

1.3.13 Provide all valves (including control valves) located in the jumpers for remote maintenance in the R5/C5 hot cell.

1.3.14 Provide design and fabrication for all piping, jumpers, and connectors for the recirculation pipework. This includes the piping connecting the separator vessel to the recirculation pump, the recirculation pump to the reboiler nozzle, and the reboiler nozzle to the separator vessel for two FEP evaporator systems and the TLP evaporator system.

1.3.15 Provide structural supports per Seller's structural support requirements for three recirculation pumps (FEP-PMP-00009A/B and TLP-PMP-00001) and recirculation piping/jumpers.

1.3.16 Provide hot cell process equipment platform (PEP) for all reboiler and support frame assemblies and recirculation pumps.

1.3.17 Provide the necessary cyclic data for Seller to perform an assessment regarding the fatigue life of the equipment. However, Seller will be responsible for confirmation that the cyclic data has been accurately interpreted before proceeding with the component fatigue analysis.

1.3.18 Provide remote handling verification test for reboiler and support frame assemblies, recirculation pumps, and recirculation pipework jumper functionality.

1.3.19 Provide all jumpers, jumper mounted equipment, and pipework connections to the separator vessel (excluding the separator offgas pipework) within the black cell.

1.3.20 Provide all pipework between Seller's provided skids (excluding the evaporator separator offgas pipework and piping connecting condenser skids and steam ejectors).

1.3.21 Provide specification of process and utility piping jumper interfaces and their locations.

1.3.22 Provide Jumper stack-up tolerance study.

1.3.23 Provide shielding for penetrations through the walls and floors.

1.3.24 Provide hot cell remote handling equipment (including impact wrenches and standard lifting equipment).

1.3.25 Provide specification for antifoam reagents.

1.3.26 Provide feed vessels (FEP-VSL-00017A/B and TLP-VSL-00009A/B).

1.3.27 Provide concentrate receipt vessels (UFP-VSL-00001A/B and TCP-VSL-00001).

1.3.28 Provide Vessel Vent system.

1.3.29 Provide steam condensate collection vessel, pump, and eductor (refer to 1.2.7).

1.3.30 Provide FEP feed pumps (FEP-PMP-00007A/B) and concentrate pumps (FEP-PMP-00008A/B) (refer to 1.2.7).

1.3.31 Provide utility (i.e., air, steam, cooling water) supply systems. However, Seller is responsible to provide steam condition skids for reboiler operation.

1.3.32 Interface drawings for evaporator equipment skids.

1.4 Definitions

1.4.1 *Skid:* A skid is a group of components that can be manufactured and installed as a unit. These skid units are structurally self-supporting, allowing the skid to be handled by crane. Whenever practical, skids will contain all the equipment associated with the process, including vessels, piping, and supports.

1.4.2 *ALARA:* As Low As Reasonably Achievable (ALARA) documentation requirements apply to systems, structures, and components (SSCs) that have the potential to affect radiation doses, contamination levels, or releases to the environment.

1.4.3 *Buyer's Representative(s)*: The Buyer's designee(s), who shall witness onsite operations at the Seller and sub-seller sites and perform onsite inspections and surveillances.

1.4.4 *Black Cell (R5/C5)*: is a sealed concrete structure containing very high radiation and contamination where human access is prohibited during the normal operating lifetime of the cell and maintenance is not performed in the cell.

1.4.5 *C1:* Uncontrolled Area.

1.4.6 C2: Controlled area. Personnel must be verified free of contamination prior to exit.

1.4.7 *C3:* Contamination classification for plant areas that are ordinarily free of contamination, but have the potential of being contaminated.

1.4.8 *C5:* Contamination classification for plant areas that are considered high contamination areas. Access to C5 areas is not permitted.

1.4.9 *Design Basis Earthquake (DBE):* A specification of the ground motion at the site. For the WTP site, the DBE is defined by horizontal and vertical acceleration response spectra anchored to a peak ground acceleration of 0.26g and 0.18g, respectively.

1.4.10 *Hot Cell (R5/C5):* A room that is restricted from personnel due to high radiation. A hot cell is constructed with thick concrete walls usually lined internally with stainless steel sheet. Process equipment located in the hot cell is connected to wall nozzles using jumpers. Process equipment in the hot cell is skid mounted and designed for either remote maintenance using crane-mounted services or, preferably, no maintenance over the 40 year design life of the WTP.

1.4.11 *Important to Safety (ITS):* SSCs that serve to provide reasonable assurance that the facility can be operated without undue risk to the health and safety of the workers and the public. ITS encompasses the broad class of facility features addressed (not necessarily explicitly) in the top-level radiological, nuclear, and process safety standards and principles that contribute to the safe operation and protection of workers and the public during all phases and aspects of facility operations (i.e., normal operation as well as accident mitigation). ITS includes

SSCs designated as Safety Design Class (SDC), Safety Design Significant (SDS), and Risk Reduction Class (RRC).

1.4.12 *Jumper:* A remotely removable section of pipework usually incorporating connector heads and some items of process equipment (i.e., valves, instruments, etc.).

1.4.13 *Commercial Material (CM)*: SSC items and associated services (those that are not designated as SDC or SDS) that are manufactured using standard commercial practices.

1.4.14 *Paragraph*: When a paragraph of this specification, referenced documents, referenced codes, or referenced standards is referenced in this specification, the paragraph referenced and all subparagraphs and sub-subparagraphs of the paragraph referenced shall be considered inclusive.

1.4.15 *Quality Level 1 (QL-1):* SDC items. NQA-1 (1989) compliance is required.

1.4.16 *Quality Level 2 (QL-2):* SDS items. QL-2 shall also be used to identify other items and activities for which NQA-1 (1989) compliance is required.

1.4.17 *Rad*: A unit of energy absorbed from ionizing radiation, equal to 100 ergs per gram or 0.01 joules per kilogram of irradiated material.

1.4.18 *Risk Reduction Class*: RRC SSCs are ITS SSCs that are neither SDC nor SDS.

1.4.19 *R1*: Unrestricted area.

1.4.20 *R2*: Radiation controlled area.

1.4.21 *R3:* Radiation classification for plant areas considered average. Contamination area requiring anti-contamination clothing for entry. At early design stages, when insufficient information is available regarding worker occupancy, an initial target radiation level of 2.5 mRad/hr is to be used for the R3 classification.

1.4.22 *R4:* Radiation area (maximum).

1.4.23 *R5:* Radiation classification for areas considered to be high or very high radiation areas.

1.4.24 *Reboiler and support frame assembly:* Reboiler and pipe work up to and including PUREX nozzles, remote clamp connector hubs, and all permanently attached frame work.

1.4.25 *Safety Design Class (SDC):* SSCs that, by performing their specified safety function, prevent workers or the maximally exposed member of the public from receiving a radiological exposure that exceeds the accident exposure standards defined in the Safety Requirements Document (SRD). SDC also applies to those features that, by functioning, prevent the worker or maximally exposed member of the public from receiving a chemical exposure that exceeds the ERPG-2

(AIHA 1988) chemical release standard. Those features credited for the prevention of a criticality event are also designated as SDC.

1.4.26 *Safety Design Significant (SDS)*: SSCs needed to achieve compliance with the radiological or chemical exposure standards for the public and workers during normal operation; and SSCs that can, if they fail or malfunction, place frequent demands on or adversely affect the function of SDC SSCs.

1.4.27 *Seismic Category I (SC-I)*: Equipment/tanks important to safety, which have a seismic safety function. For the design of Seismic Category I equipment/tanks, no credit for inelastic energy absorption is allowed. Seismic Category I equipment/tanks shall be functional during and after a Design Basis Earthquake (DBE).

1.4.28 *Seismic Category II (SC-II):* Equipment/tanks important to safety whose failure during a seismic event could prevent a Seismic Category I structure, system, or component (SSC) from performing its seismic safety function. For the design of Seismic Category II equipment/tanks, credit for inelastic energy absorption is allowed. Seismic Category II equipment/tanks shall maintain control and confinement of hazardous materials during and after a Design Basis Earthquake (DBE), but do not need to be functional.

1.4.29 *Seismic Category III Equipment (SC-III):* (a) SDC and SDS SSCs that do not have a natural phenomena hazard (NPH) safety function. (b) SSCs that have a seismic safety function solely because they protect workers and members of the public from exposure to chemical hazards. (c) RRC SSCs that provide primary confinement of significant inventories of radioactive materials, but in amounts less than quantities that require an SDC or SDS designation.

1.4.30 *Seismic Category IV (SC-IV)*: RRC SSCs that have been designated as RRC do not provide primary confinement of significant inventories of radioactive materials.

1.4.31 *Special Tools:* Any tooling which is not commercially available required to perform maintenance on the evaporator system.

1.4.32 *Acronyms*

- ALARA — As Low As Reasonably Achievable
- AISC — American Institute of Steel Construction
- ANSI — American National Standards Institute
- ASD — Adjustable Speed Drive
- ASD — Manual of Steel Construction (Allowable Stress Design)
- ASME — American Society of Mechanical Engineers
- ASNT — American Society of Nondestructive Testing
- ASTM — American Society for Testing and Materials
- AWS — American Welding Society
- CFR — Code of Federal Regulations
- CM — Commercial grade
- DBE — Design Basis Earthquake

- DOE — US Department of Energy
- DOT — Department of Transportation
- FEP — Waste Feed Evaporator Process System
- GPM — Gallons per minute
- ITS — Important to Safety
- LAW — Low-Activity Waste
- M — Molarity
- MDS — Material Data Sheet
- MR — Material Requisition
- MSDS — Material Safety Data Sheet
- NDE — Nondestructive Evaluation/Examination
- NPS — Nominal Pipe Size
- NQA — Nuclear Quality Assurance
- OBE — Operating Basis Earthquake
- ORP — DOE Office of River Protection
- PEP — Process Equipment Platform
- PMI — Positive Material Identification
- P&ID — Piping and Instrumentation Diagram
- PTF — Pretreatment Facility
- QA — Quality Assurance
- QAP — Quality Assurance Program
- QAM — Quality Assurance Manual
- QL — Quality Level
- RRC — Risk Reduction Class
- SBS — Submerged Bed Scrubber
- SDC — Safety Design Class
- SDS — Safety Design Significant
- SC — Seismic Category
- SSCs — Structures, Systems, and Components
- SSPC — The Society for Protective Coating
- RPP-WTP — River Protection Project-Waste Treatment Plant
- TID — Total Integrated Dose
- TLP — Treated LAW Evaporator Process System
- SC — Seismic Category
- SDDR — Supplier Deviation Disposition Request
- SG — Specific Gravity
- UBC — Uniform Building Code
- WT % — Weight percent
- WTP — Hanford Tank Waste Treatment and Immobilization Plant

1.5 Mechanical Data Sheets

Specific design parameters and requirements for evaporator components will be shown on the individual Mechanical Data Sheet (MDS) in section 2 of the MR. The data shall be considered as preliminary. Seller shall verify thermal, hydraulic, mechanical and process designs. Where necessary, the Seller shall change the data in order to furnish complete

thermal, hydraulic, mechanical, and process guarantees. Any difference between Seller's final design and Buyer's preliminary data shall be brought to Buyer's attention for resolution and approval. Seller shall supply evaporator components that meet specified materials of construction, quality level, and seismic category as described on the MDS. The nominal feed chemistries used for the design should be based on Appendix A and B of this specification. Process design of the evaporator system is given in Appendix D of this specification.

1.6 Safety/Quality Classifications

1.6.1 The quality level (QL) and seismic category (SC) of the major components of the evaporator system are specified on the data sheets in section 2 of the MR and Appendix E of this specification.

1.6.2 Seismic category (SC) classification requirements are specified in 24590-WTP-3PS-SS90-T0001, Specification for Seismic Qualification of Seismic Category I/II Equipment and Tanks and 24590-WTP-3PS-FB01-T0001, Specification for Seismic Qualification for Seismic Category III/IV Equipment and Tanks.

2 Applicable Documents

2.1 General

2.1.1 Work shall be done in accordance with the referenced codes, standards, and documents listed below, which are an integral part of this specification.

2.1.2 When specific chapters, sections, parts, or paragraphs are listed following a code, industry standard, or reference document, only those chapters, sections, parts, or paragraphs of the document are applicable and shall be applied. If a date or revision is not listed, the latest issue, including addenda, at the time of award shall apply. Pre-approved acceptable alternate editions are listed in section 4.2.12. For codes and standards listed below, the specific revision or effective date of codes and standards that they incorporate by reference (daughter codes and standards), shall be followed. When more than one code, standard, or referenced document covers the same topic, the requirements for all must be met with the most stringent governing. For commercial grade quality items, Seller may use any year of the ASME or ASTM standards for materials.

2.2 Codes and Industry Standards

2.2.1 ASME B31.3-1996, Process Piping

2.2.2 ASME B16.5-1988, Pipe Flanges and Flanged Fittings NPS 1/2 Through NPS 24 Addenda A

2.2.3 ASME B16.47-1990, Large Diameter Steel Flanges NPS 26 through NPS 60 Addenda A

2.2.4 ASME B18.15-1985, Forged Eye Bolts

2.2.5 ASME Boiler and Pressure Vessel Code, Section VIII, Div. 1, Rules for Construction of Pressure Vessel

2.2.6 ASME Boiler and Pressure Vessel Code, Section IX, Welding and Brazing Qualifications

2.2.7 ASME NQA-1-1989, Quality Assurance Program Requirements for Nuclear Facility Applications

2.2.8 ASME Y14.100, Engineering Drawing Practices

2.2.9 AISC ASD, 9th Edition, Manual of Steel Construction, Allowable Stress Design

2.2.10 AISC N690-1994, Specification for the Design, Fabrication, and Erection of Steel Safety-Related Structures for Nuclear Facilities

2.2.11 ANSI N14.6, For Radioactive Materials-Special Lifting Devices for Shipping Containers Weighing 10,000 Pounds (4500 kg) or More

2.2.12 ASTM F593, Standard Specification for Stainless Steel Bolts, Hex Cap Screws, and Studs

2.2.13 ASTM F594, Standard Specification for Stainless Steel Nuts

2.2.14 AWS D1.6, Structural Welding Code-Stainless Steel

2.2.15 AWS D9.1, Sheet Metal Welding Code

2.2.16 IEEE Std 1023, IEEE Guide for the Application of Human Factors Engineering to Systems, Equipment, and Facilities of Nuclear Power Generating Stations

2.2.17 MIL-STD-1629A, Military Standard, Procedures for Performing A Failure Mode, Effects and Criticality Analysis

2.2.18 UBC-1997, Uniform Building Code

2.2.19 10 CFR 835, Occupational Radiation Protection

2.2.20 49 CFR 173, General Requirements for Shipments and Packaging. Code of Federal Regulations. U.S. Department of Transportation, Washington, D.C.

2.2.21 29 CFR 1910, Occupational Safety and Health Standards

2.2.22 NFPA 101, Code for Safety to Life from Fire in Buildings and Structures

2.2.23 NFPA 70 -1999, National Electric Code

2.2.24 SSPC-SP10, Near White Metal Blast Cleaning

2.2.25 SSPC-SP11, Power Tool Cleaning to Bare Metal

2.2.26 WAC 296-24, General Safety and Health Standards

2.2.27 595, Colors Used in Government Procurement

2.2.28 E 709, Standard Test Method for Magnetic Particle Examination

2.3 Reference Documents

2.3.1 Interfacing References

2.3.1.1 24590-WTP-3PS-G000-T0001,General Specification for Supplier Quality Assurance Program Requirements

2.3.1.2 24590-WTP-3PS-G000-TP002, Specification for Positive Material Identification (PMI)

2.3.1.3 24590-WTP-3PS-G000-T0003, General Specification for Packaging, Shipping, Handling, and Storage Requirements

2.3.1.4 24590-WTP-3PS-NWP0-T0001, Engineering Specification for General Welding and NDE Requirements for Supplier Fabricated Piping

2.3.1.5 24590-WTP-3PS-P000-T0001, Engineering Specification for Piping Material Classes General Description and Summary

2.3.1.6 24590-WTP-3PS-SS00-T0002, Engineering Specification for Welding of Structural Stainless Steel and Welding of Structural Carbon Steel to Structural Stainless Steel

2.3.1.7 24590-WTP-3PS-SS90-T0001, Specification for Seismic Qualification of Seismic Category I/II Equipment and Tanks

2.3.1.8 24590-WTP-3PS-FB01-T0001, Engineering Specification for Structural Design Loads for Seismic Category III & IV Equipment and Tanks

2.3.1.9 24590-WTP-3PS-EVV1-T0001, Specification for Low Voltage Adjustable Speed Drives

2.3.1.10 24590-WTP-3PS-MUMI-T0002, Specification for Low Voltage Induction Motors

2.3.1.11 24590-WTP-3PS-MPC0-TP002, Engineering Specification for General Centrifugal Pumps to Meet Requirements of ASME B73.1M-1991 and ASME B73.2M-1991 for Commercial (CM) Components

2.3.1.12 24590-WTP-3PS-M000-T0002, General Specification for Mechanical Handling Equipment Design and Manufacture

2.3.1.13 24590-WTP-3PS-MJJ0-T0001, Engineering Specification for Lifting Beams for Mechanical Handling Equipment Important to Safety Quality Level II

2.3.1.14 24590-WTP-3PS-MV00-TP001, Engineering Specification for Pressure Vessel Design and Fabrication

2.3.1.15 24590-WTP-3PS-MV00-TP002, Engineering Specification for Seismic Qualification Criteria for Pressure Vessels

2.3.1.16 24590-WTP-3PS-MES0-TP001, Engineering Specification for Shell and Tube Heat Exchangers

2.3.1.17 24590-WTP-3PS-MVB2-T0001, Engineering Specification for Welding of Pressure Vessels, Heat Exchangers, and Boilers

2.3.1.18 24590-WTP-3PS-JQ07-T0001, Engineering Specification for Instrumentation for Package Systems

2.3.1.19 24590-WTP-3PS-PS02-T0001, Engineering Specification for Shop Fabrication of Piping

2.3.1.20 24590-WTP-3PS-SS00-T0001, Engineering Specification for Welding of Carbon Structural Steel.

2.3.1.21 24590-WTP-3PS-EKP0-T0001, Engineering Specification for Electrical Requirements for Packaged Equipment

2.3.1.22 24590-WTP-3PS-PP00-T0002, Engineering Specification for Dimensional Record Program.

2.3.2 Developmental References

2.3.2.1 24590-PTF-3YD-FEP-00001, System Description for Waste Feed Evaporation Process (FEP)

2.3.2.2 24590-PTF-3YD-TLP-00001, System Description for Treated LAW Evaporation Process (TLP)

2.3.2.3 24590-WTP-3PS-MV00-TP003, Engineering Specification for Pressure Vessel Fatigue Analysis

2.4 Reference Drawings / Data Sheets

2.4.1 24590-WTP-MV-M59T-00001, Pressure Vessel Tolerances Standard Details

2.4.2 24590-WTP-MV-M59T-00007, Thermowell Connection Standard Details

2.4.3 24590-WTP-MV-M59T-00009, Lifting Lugs Standard Details

2.4.4 24590-WTP-MV-M59T-00010, Tailing Lug Standard Details

2.4.5 24590-WTP-MV-M59T-00011, Wash Rings Standard Details

2.4.6 24590-WTP-MV-M59T-00012, Grounding Lug Standard Details

2.4.7 24590-WTP-MV-M59T-00016001, Vessel Connections Standard Details Sheet 1 of 3

2.4.8 24590-WTP-MV-M59T-00016002, Vessel Connections Standard Details Sheet 2 of 3

2.4.9 24590-WTP-MV-M59T-00016003, Vessel Connections Standard Details Sheet 3 of 3

2.4.10 24590-WTP-MV-M59T-00017, Vessel Inspection Manway Standard Details

2.4.11 24590-WTP-MV-M59T-00018, Vessel Name Plate Standard Details

2.4.12 24590-WTP-MV-M59T-00026, Anchor Bolt Chair Details for Vertical Vessels

2.4.13 24590-WTP-M0-M10T-00004, HLW & PTF Vitrification Systems HSH, RWH, PFH, PIH Design Proposal Drawing 3 Ton Capacity Lifting Hook

2.4.14 24590-WTP-M6-50-P0001, P&ID Symbol and Legend Sheet 1 of 6

2.4.15 24590-WTP -M6-50-P0002, P&ID Symbol and Legend Sheet 2 of 6

2.4.16 24590-WTP -M6-50-P0003, P&ID Symbol and Legend Sheet 3 of 6

2.4.17 24590-WTP -M6-50-P0004, P&ID Symbol and Legend Sheet 4 of 6

2.4.18 24590-WTP -M6-50-P0005, P&ID Symbol and Legend Sheet 5 of 6

2.4.19 24590-WTP -M6-50-P0006, P&ID Symbol and Legend Sheet 6 of 6

2.4.20 24590-PTF-P1-P01T-P0001, Pretreatment Building General Arrangement Plan at El. 0'-0"

2.4.21 24590-PTF-P1-P01T-P0002, Pretreatment Building General Arrangement Plan at El. 28'-0"

2.4.22 24590-PTF-P1-P01T-P0007, Pretreatment Building General Arrangement Section A-A

2.4.23 24590-PTF-P1-P01T-P0008, Pretreatment Building General Arrangement Section B-B

2.4.24 24590-PTF-P1-P01T-P0009, Pretreatment Building General Arrangement Section C-C

2.4.25 24590-PTF-P1-P01T-P0010, Pretreatment Building General Arrangement Section D-D

2.4.26 24590-PTF-P1-P01T-P0011, Pretreatment Building General Arrangement Section E-E

2.4.27 24590-PTF-P1-P01T-P0012, Pretreatment Building General Arrangement Sect. F-F and Sect. G-G

2.4.28 24590-PTF-P1-P01T-P0013, Pretreatment Building General Arrangement Sect. H-H and Sect. J-J

2.4.29 24590-PTF-P1-P01T-P0014, Pretreatment Building General Arrangement Sect. K-K and Sect. L-L

2.4.30 24590-PTF-P1-P01T-P0015, Pretreatment Building General Arrangement Sect. M-M and Sect. N-N

2.4.31 24590-PTF-P1-P01T-P0016, Pretreatment Building General Arrangement Sect. P-P and Sect. Q-Q

2.4.32 24590-PTF-P1-P01T-P0017, Pretreatment Building General Arrangement Sect. R-R

2.4.33 24590-PTF-DD-S13T-00022, Pretreatment Facility Structural Concrete Embedments Key Plan Elevation 0 ft – 0 in

2.4.34 24590-PTF-DD-S13T-00023, Pretreatment Facility Structural Concrete Embedments Key Plan Elevation 0 ft – 0 in Sh 1

2.4.35 24590-PTF-DD-S13T-00025, Pretreatment Facility Structural Concrete Embedments Plan El 0 ft – 0 in Sh 3

2.4.36 24590-PTF-DD-S13T-00026, Pretreatment Facility Structural Concrete Embedments Plan El 0 ft – 0 in Sh 4

2.4.37 24590-PTF-DD-S13T-00027, Pretreatment Facility Structural Concrete Embedments Plan Elevation 0 ft – 0 in Sh 5

2.4.38 24590-PTF-DD-S13T-00028, Pretreatment Facility Structural Concrete Embedments Plan Elevation 0 ft – 0 in Sh 6

2.4.39 224590-PTF-DD-S13T-00029, Pretreatment Facility Structural Concrete Embedments Plan El. 0'-0" Sh 7

2.4.40 24590-PTF-DD-S13T-00030, Pretreatment Facility Structural Concrete Embedments Plan El. 0'-0" Sh 8

2.4.41 24590-PTF-DD-S13T-00031, Pretreatment Facility Structural Concrete Embedments Plan El. 0'-0" Sh 9

2.4.42 24590-PTF-DD-S13T-00036, Pretreatment Facility Structural Concrete Embedments EL 0 ft – 0 in Vessels Sh 1

2.4.43 24590-PTF-DD-S13T-00039, Pretreatment Facility Structural Concrete Embedments EL 0 ft – 0 in Vessels Sh 2

2.4.44 24590-PTF-DD-S13T-00042, Pretreatment Facility Structural Concrete Embedment Details EL 0 ft – 0 in Vessels Sh 1

2.4.45 24590-PTF-DD-S13T-00043, Pretreatment Facility Structural Concrete Embedment Details EL 0 ft – 0 in Vessels Sh 2

2.4.46 24590-PTF-DD-S13T-00044, Pretreatment Facility Structural Concrete Embedment Details EL 0 ft – 0 in Vessels Sh 3

2.4.47 24590-PTF-DD-S13T-00047, Pretreatment Facility Structural Concrete Embedment EL 0 ft – 0 in Misc Sh1

2.4.48 24590-PTF-DD-S13T-00049, Pretreatment Facility Structural Concrete Embedment EL 0 ft – 0 in Misc Sh 3

2.4.49 24590-PTF-MJD-PIH-00001, Mechanical Handling Data Sheet for Overhead Mast Power Manipulator

2.4.50 24590-PTF-M0-PIH-00008, Pretreatment System PIH Design Proposal Drawing 30 Ton Capacity Lifting Hook

2.4.51 24590-WTP-M61-P23T-00056, WTP Details Lower Holder Bottom Outlet Electrical Connector 2"

2.4.52 24590-PTF-SS-S15T-00311, Pretreatment Facility Structural Misc Support Steel El. 0'-0" Plan Sh 1

2.4.53 24590-PTF-SS-S15T-00312, Pretreatment Facility Structural Misc Support Steel El. 0'-0" Plan Sh 2

2.4.54 24590-PTF-SS-S15T-00313, Pretreatment Facility Structural Misc Support Steel El. 0'-0" Plan Sh 3

2.4.55 24590-PTF-SS-S15T-00314, Pretreatment Facility Structural Misc Support Steel El. 0'-0" Plan Sh 4

2.4.56 24590-PTF-SS-S15T-00315, Pretreatment Facility Structural Misc Support Steel El. 0'-0" Plan Sh 5

2.4.57 24590-PTF-SS-S15T-00316, Pretreatment Facility Structural Misc Support Steel El. 0'-0" Plan Sh 6

2.4.58 24590-PTF-SS-S15T-00317, Pretreatment Facility Structural Misc Support Steel El. 0'-0" Plan Sh 7

2.4.59 24590-PTF-SS-S15T-00318, Pretreatment Facility Structural Misc Support Steel El. 0'-0" Plan Sh 8
SS-S15T 9 1-6-06

2.4.60 24590-PTF-~~DD-S13T~~-00352, Pretreatment Facility Structural Misc Support Steel Details Sh 3
SS-S15T 9 1-6-06

2.4.61 24590-PTF-~~DD-S13T~~-00354, Pretreatment Facility Structural Misc Support Steel Details Sh 5

2.4.62 24590-WTP-M61-P23T-00056, WTP Details Lower Holder Bottom Outlet Electrical Connector 2".

2.4.63 24590-WTP-M61-P23T-00057, WTP Assembly Lower Holder Electrical Connector 2 Inch.

2.4.64 24590-WTP-M61-P23T-00005, WTP Details - Nozzles PUREX Male Connector 1", 2", 3", 4"

2.4.65 24590-WTP-M61N-P23T-00006, Nozzles PUREX Connector 1", 2", 3", 4"

2.4.66 24590-WTP-M61-P23T-00040, WTP Details - Kickoff Plates PUREX Connector 1", 2", 3", 4"

2.4.67 24590-WTP-M61-P23T-00057, WTP Assembly Lower Holder Electrical Connector 2 Inch.

2.4.68 24590-WTP-P61-P27T-00001, WTP Standard Jumper Details

2.4.69 24590-PTF-M6-FEP-P0001, P&ID - PTF Waste Feed Evaporation Process System Evaporator Feed Vessels FEP-VSL-00017A/B.

2.4.70 24590-PTF-M6-FEP-P0002, P&ID - PTF Waste Feed Evaporation Process System Separator FEP-SEP-00001A.

2.4.71 24590-PTF-M6-FEP-P0003, P&ID - PTF Waste Feed Evaporation Process System Condensers & Condensate Collection FEP-VSL-00005.

2.4.72 24590-PTF-M6-FEP-P0004, P&ID - PTF Waste Feed Evaporation Process System Separator FEP-SEP-00001B.

2.4.73 24590-PTF-M6-FEP-P0005, P&ID - PTF Waste Feed Evaporation Process System Condensers.

2.4.74 24590-PTF-M6-TLP-P0001, P&ID - PTF Treated LAW Evaporation Process System LAW SBS Condensate Receipt TLP-VSL-00009A & 9B.

2.4.75 24590-PTF-M6-TLP-P0002, P&ID - PTF Treated LAW Evaporation Process System Condensate Collection TLP-VSL-00002.

2.4.76 24590-PTF-M6-TLP-P0003, P&ID - PTF Treated LAW Evaporation Process System Separator TLP-SEP-00001.

2.4.77 24590-PTF-M6-STR-00001, P&ID - PTF Strontium Nitrate, Sodium Permanganate, and Anti-foam Reagent Distribution (CM).

3 Design Requirements

3.1 General

3.1.1 As Low As Reasonably Achievable (ALARA) principles shall be factored into the design and maintenance of the evaporator systems per 10 CFR 835, *Occupational Radiation Protection*.

3.1.2 Unless otherwise specified, the evaporator systems shall be designed and fabricated per applicable documents listed in section 2.0 of this specification, and the data sheets in section 2 of the MR. No changes, substitutions, or deviations shall be made without Buyer's concurrence.

3.1.3 The evaporator system design shall comply with the requirements stipulated in this specification. Seller shall conform with Buyer's requirements for hot cell wall penetrations, recirculation piping/jumper configuration, layout, dimension, location as shown in the Appendices I, J, and K. Seller shall confirm locations for all evaporator equipment are adequate for system functionality. Seller shall submit any variances to these requirements during design review stage for concurrence.

3.1.4 The evaporator piping and instrumentation sketches provided in the Appendix L of this specification illustrate the conceptual piping and instrument control of the evaporator systems. All evaporator systems or components shall have adequate control features to bring evaporator operations to a safe and stable 'shutdown' condition during an abnormal event. Seller's control design philosophy can differ from Buyer's conceptual control; however, the Seller's control system design shall conform to Buyer's specification 24590-WTP-3PS-JQ07-T0001.

3.1.5 General Arrangement drawings should be used to convey approximate equipment locations for skids. Equipment locations shown in the Appendices I, J, and K shall be maintained unless the design dictates an alternate location.

3.1.6 The Seller shall be responsible for the evaporator system design including component specification such as design parameters, sizing, pipe support loads, pipe hangers, anchors, pipe slopes and environmental protection (temperature, humidity, etc.) as required.

3.1.7 A means shall be provided to avoid accumulation of settled solids (e.g., sparging or removal of separator contents) in event of recirculation pump failure.

3.1.8 All heat exchangers including reboilers and condensers shall comply with ASME section VIII and TEMA standard, Class B. "Code Stamp" shall be provided for all Seller's provided heat exchangers.

3.1.9 Seller shall comply with nozzle loading requirements specified in the 24590-WTP-3PS-MV00-TP001, *Engineering Specification for Pressure Vessel Design and Fabrication.*

3.1.10 Gusset plates cannot be utilized to accommodate the required nozzle loading on safety class vessels and heat exchangers.

3.1.11 The equipment shall be designed such that personnel sound level exposure outside of R5/C5 area shall not exceed 85 dBA. Seller shall clearly state how the specified sound level limit will be met.

3.1.12 All calculations, modeling, analyses, drawings, and documentation shall utilize U.S. customary units.

3.1.13 Design of the evaporator systems shall incorporate the latest and best proven technology, components, and materials for the required service conditions and performance.

3.1.14 The evaporator system model analysis, thermal analysis, design analysis, and seismic analysis shall be verified such that the final system, equipment and component design meet the requirements of this specification as well as its addenda and attachments.

3.1.15 Evaporator system equipment shall be furnished as discrete skid mounted units that are ready to integrate with the Buyer's structures, systems, and components.

3.1.16 The evaporator systems shall be identical in component count, capacity, and mode of operation and shall utilize common component types and equipment manufacturers.

3.1.17 The FEP and TLP Evaporator systems shall be designed in accordance with following feed conditions:

- Design FEP feed flow of 50 gpm
- Design TLP feed flow of 38
- Design feed temperature of 77 °F
- Waste feed pH of 11 – 14
- LAW SBS pH of 6.8

3.1.18 Normal design cooling water temperature of 75 °F with a peak summer maximum of 83 °F shall be used for designing/sizing all condensers. The cooling water temperature of 75 °F is valid for 85 % of the time through a year. During 15 % of the time when cooling water temperature is above 75 °F, the TLP evaporator system can be operated at a higher temperatures (i.e., 1.2 psia, 127 °F – 131 °F). This operating strategy is for short term operation and is to minimize cooling water flow.

3.1.19 Evaporator systems and components should be designed to prevent the migration of contamination into the utility / reagent systems.

3.1.20 Human factors and ergonomics shall be designed into all evaporator equipment requiring manual operations per IEEE Std 1023, *IEEE Guide for the Application of Human Factors Engineering to Systems, Equipment, and Facilities of Nuclear Power Generating Stations.*

3.1.21 Quality level, seismic category, materials of construction, design pressure, and design temperature shall be in accordance with the data sheets in section 2 of the MR and Appendix E of this specification. If a change to the requirements for materials and/or the equipment types to be used during the execution of the contract is dictated because of design analyses, then the Seller is required to provide Buyer its recommendation for review and concurrence prior to incorporation into the design of the evaporator systems.

3.1.22 All equipment in evaporator systems requiring maintenance or removal shall have flushing and draining capability to facilitate decontamination. Design features shall minimize the need for decontamination by including sloping features, replacing sharp bends with gradual bends, etc. where practical, consistent with ALARA practices.

3.1.23 Provision for temperature instrumentation shall be jumper nozzles incorporating the required thermowell details.

3.1.24 Nozzle and flange alignment shall be within ± 0.5 degrees of design specifications.

3.1.25 Jumper nozzle connections shall be included in the evaporator systems to interface with the Buyer supplied jumpers. Location and details of the connections shall be per Appendix P.

3.1.26 The reboiler support frame detail sketches provided in the Appendix P of this specification illustrate the conceptual design to support remoteability.

3.1.27 Seller's reboiler frame design shall not protrude into the crane path as specified in Appendix P.

3.1.28 The hub type (remote clamp) connectors and PUREX nozzles are the only government-furnished equipment, which will be sent to Seller for installation. Buyer will provide Seller hydro test blanks for the remote clamp connectors (Grayloc) and the remote PUREX and other connectors for installation on the axial flow pumps and reboilers.

3.1.29 Nozzles for reboiler and support frame assemblies are to be designed to maintain positional tolerance during operational loading conditions and maintain structural integrity during and after a DBE. Preliminary loading information for the nozzle loads at Grayloc connections on the reboilers are provided in Appendix P.

3.1.30 All adjustable speed drives for pumps can be designed for non-radiation environment.

3.1.31 Seller's fabrication drawings shall be used as the document of record for fabrication of the components. Seller's specification drawings are not required to be revised and maintained in total agreement with approved fabrication drawings.

3.1.32 Regarding Buyer's specification 24590-WTP-3PS-G000-T0003, *Engineering Specification for Packing, Handling, and Storage requirements,* the center of gravity and sling points are not needed for off-gas piping pieces and separator vessel support towers because they are awkward hollow parts that do not allow a meaningful center of gravity to be determined or designed. Multiple sling configurations are possible to affect a successful lift and should be at the discretion of site construction supervisor.

3.1.33 Seller shall provide evaporator systems in the skids for ease of transportation, installation, and replacement. Seller is responsible for equipment skid sizing and layout to fit Buyer's facility. For the baseline design, each evaporator system will comprise the following skids:

- Separator vessel skids
- Reboiler and support frame assemblies.
- TLP feed pumps skid
- TLP concentrate pumps skid
- Primary condenser skids
- Secondary condenser skids which includes inter-condenser, after-condenser, and steam ejector
- Process condensate skids which includes vessel and pump
- Steam conditioning system which includes a pressure reducing valve and control and a desuperheater
- Antifoam skids which include vessel and pumps

3.2 Basic Function

The evaporator systems employ forced circulation and vacuum evaporation. The Waste Feed Process (FEP) evaporator system consists of two (2) identical evaporators which will be installed at the west end of the pretreatment facility (PTF). The Treated Low Activity Waste Process (TLP) evaporator system will be installed at the east end of the PTF.

Each evaporator will be designed to process 100 % of the design feed flow (50 gpm for each FEP system and 39 gpm for TLP system) with an evaporation feed rate of 30 gpm and to operate independent of each other. Normal operation of the FEP evaporator system consists of one evaporator operating at a time but simultaneous operation is possible. The FEP evaporators partially evaporate Waste Feed from the Department of Energy (DOE) and various recycle streams from within the pretreatment process. The Waste Feed is evaporated in order to optimize the operation of downstream unit operations. The Waste Feed flow is varied in order to control the level in the FEP separator. The FEP evaporator shall be designed to achieve a sodium concentration of 5 to 6M.

The LAW Submerged Bed Scrubber (SBS) condensate and treated LAW are fed to the TLP evaporator simultaneously. The treated LAW feed is fed continuously and at a constant rate while the flow of SBS condensate is varied in order to control the level in the TLP separator vessel. The TLP evaporator shall be designed to achieve a sodium concentration of 8 to 10M.

The feed stream is introduced into the recirculation loop on the suction side of the recirculation pump. The recirculation pump circulates the liquor at a rate of approximately 11,000 gpm. The pump discharges liquor through evaporator reboiler, which raises the temperature of the liquor by approximately 2 to 4 °F using 2.5 psig steam throttled from 40 psig low pressure steam supply to the building. This small temperature rise is necessary to prevent the liquor from boiling (fouling) in the tubes before it reaches the separator vessel. Sufficient hydrostatic head is maintained to suppress boiling inside the reboiler. When the recirculating liquor reaches the separator vessel, flash evaporation occurs due to the reduced pressure in the vessel. The vapor flows through a series of separation trays and a removable demister pad section which are internal parts of the separator vessel. The vapor then flows to the primary condenser where the majority of the vapor is condensed. The noncondensables and a small amount of moisture are vented to the ejector/condenser vacuum system. The secondary condenser system consists of primary ejector, secondary ejector, inter-condenser, and after-condenser. The humid noncondensables from the primary condenser flow to the suction side of the primary ejector which discharges to the inter-condenser. The vent from the inter-condenser flows to the suction side of the secondary ejector which discharges into the after-condenser. The vent from the after-condenser flows to the facility vessel vent system. The secondary condenser system is designed to achieve a pressure of 1.0 to 1.3 psia in the separator vessel during normal operating conditions. The operating pressure is automatically controlled by an air in-bleed into the suction line of the primary ejector. This operating pressure lowers the boiling point of the liquor to approximately 122 °F which reduces potential corrosion of the evaporator by chlorides. Condensate from the condensers flows by gravity to the condensate vessel. Some of the condensate is drawn off and used to wash the demister pads in the separator vessel. Because of the foaming tendencies of evaporator feed chemistry, when foaming is anticipated in the separator vessel, antifoam will be continuously added.

3.3 Performance

3.3.1 All three (3) evaporator systems shall be capable of continuous operation while achieving a feed evaporation rate ranging from 10 to 30 gpm. The design feed evaporator rate shall exclude all water/fluid addition to demister pads spray, separation trays, and antifoam injection.

3.3.2 Each evaporator system shall operate independently.

3.3.3 Each evaporator system shall have the ability to be placed on "total reflux" mode.

3.3.4 A minimum decontamination factor of 8.0E+06 shall be achieved as defined in section 7.2.1, function test requirements, with consideration to achieving the evaporator stream operating conditions described in subsection 3.4 and the ALARA general design condition in subsection 3.1.

3.3.5 Evaporator system operating parameters shall minimize reboiler fouling by using low differential temperature and high tube velocity to the extent practical in the design.

3.3.6 The FEP evaporator systems shall produce waste concentration of 5 to 6M sodium (1.23 to 1.50 SG).

3.3.7 The TLP evaporator system shall produce waste concentration of 8 to 10M sodium (1.33 to 1.57 SG).

3.3.8 All evaporator system components within the R5/C5 black cell (except the demister pads) shall be nonreplaceable components with a design life of 40 years. Reboilers and recirculation pumps in the R5/C5 hot cell shall be remotely replaceable.

3.4 Design Conditions

3.4.1 General

3.4.1.1 For nominal conditions refer to Appendix A and Appendix B for the FEP evaporator and TLP evaporator stream data, respectively. The data defines the system performance operating conditions and requirements. For predicted maximum radionuclides, refer to Appendix C.

3.4.1.2 All equipment skids shall meet applicable Department of Transportation (DOT) requirements for road transportation per 49 CFR 173.

3.4.2 Physical Constraints/Interfaces

3.4.2.1 The FEP evaporator separator vessels (FEP-SEP-00001A/B) with demister pads shall be located in the R5/C5 black cell, room P-0106 on the 0-ft floor elevation. The TLP evaporator separator vessel (TLP-SEP-00001) shall be located in the R5/C5 black cell, room P-0117 on the 0-ft floor elevation. Demister pad assemblies shall be accessed through a sealed, shielded aperture in the 56 ft floor (10-ft diameter maximum). Refer to Appendices I and J for their locations and layout.

3.4.2.2 All Reboiler and support frame assemblies and recirculation pumps shall be located in the R5/C5 hot cell, room P-0123 on the 0-ft floor elevation. Each reboiler and support frame assemblies shall not weigh more than 27.5 tons including all lifting fixtures and lifting beams. The available space for each reboiler (excluding nozzles) has dimensions of 6 ft diameter by 15 ft high. All equipment assembly must fit through a 13 ft by 13 ft air lock door and shall not exceed 21 ft length. Assume air lock transportation cart is 3 ft high. The space envelope limitation of 6 feet diameter shall be used for mounting of remote connectors and seal flush reservoir on the recirculation pump

assembly. Refer to Appendix P for location of reboiler and recirculation pump.

3.4.2.3 FEP evaporator primary condensers (FEP-COND-00001A/B) and secondary condenser system (FEP-COND-00002A/B, -00003A/B, and FEP-EJCTR-00040, -00041, -00042, -00043) shall be designed to fit in room P-0304 on the 56-ft floor elevation. TLP evaporator primary condenser (TLP-COND-00001) and secondary condenser system (TLP-COND-00002, -00003, and TLP-EJCTR-00064, -00067) shall be designed to fit in room P-0311 on the 56-ft floor elevation. Refer to Appendices I and J for locations and layout.

3.4.2.4 FEP evaporator condensate vessel and pump system (FEP-VSL-00005 and FEP-PMP-00006A/B) shall be designed to fit in room P-0105B (R2/C3) on the 0-ft floor elevation. TLP evaporator condensate vessel and pump system (TLP-VSL-00002 and TLP-PMP-00002A/B) shall be designed to fit in room P-0118 (R2/C3) on the 0-ft floor elevation. Refer to Appendices I and J for locations and layout.

3.4.2.5 Antifoam vessel and pump system (AFR-TK-00001 and AFR-PMP-00006, -00007, -00008) shall be designed to fit in room P-0429 on the 77-ft floor elevation (R2/C2). Refer to Appendix K for locations and layout.

3.4.3 Buyer Supplied Utilities

Values for all utility supply pressures and temperatures are nominal values.

3.4.3.1 Plant service air and instrument air will be supplied at approximately 100 psig and 65 °F.

3.4.3.2 Low pressure steam will be supplied at approximately 40 psig and 286 °F.

3.4.3.3 High pressure steam will be supplied at approximately 109 psig and 343 °F.

3.4.3.4 Cooling water will be supplied at approximately 45 psig and 75 °F with a peak summer maximum of 83 °F. The cooling water temperature of 75 °F is valid for 85 % of the time through a year.

3.4.3.5 Demineralized water will be supplied at approximately 72.5 psig and 75 °F for demister pad and separation tray spray in the event that sufficient process condensate is unavailable.

3.4.3.6 Water, 5 M nitric acid at approximately 75 psig and 77 °F, or 50 % wt caustic at approximately 75 psig and 77 °F can be supplied for the Seller's flushing system.

3.5 Environmental Conditions

Environmental qualification is not applicable per Buyer's equipment qualification design guide.

3.5.1 Storage

Prior to installation, the evaporator systems may be stored outdoors at ambient temperature extremes ranging from –30 °F dry-bulb to 117 °F dry-bulb and with a relative humidity of 0-100 %.

3.5.2 Evaporator Separator Vessels

The separator vessels (FEP-SEP-00001A/B and TLP-SEP-00001) will be installed indoors in an R5/C5 black cell maintained between 59 to 113 °F dry-bulb temperature during normal operation. Radiation exposure for the FEP separator vessels (FEP-SEP-00001A/B) will be 1,000 – 1,800 Rad/hr. Radiation exposure for the TLP separator vessel (TLP-SEP-00001) will be 0.5 Rad/hr.

3.5.3 Reboilers and Recirculation Pumps

The reboilers (FEP-RBLR-00001A/B and TLP-RBLR-00001) and recirculation pumps (FEP-PMP-00009A/B and TLP-PMP-00001) will be installed indoors in an R5/C5 hot cell maintained between 59 to 113 °F dry-bulb temperature during normal operation. Radiation exposure will be 1,000 Rad/hr.

3.5.4 Primary and secondary condensers

The FEP primary condensers (FEP-COND-00001A/B) and FEP secondary condensers (FEP-COND-00002A/B, -00003A/B, and FEP-EJCTR-00040, -00041, -00042, -00043) will be installed indoors in an R5/R3/C3 area maintained between 59 to 113 °F dry-bulb temperature during normal operation. The TLP primary condenser (TLP-COND-00001) and TLP secondary condensers (TLP-COND-00002, -0003, and TLP-EJCTR-00064, -00067) will be installed indoors in an R3/C3 area maintained between 59 to 113 °F dry-bulb temperature. Radiation exposure will be 10 mRad/hr during normal operation.

3.5.5 Condensate Vessels, Antifoam Vessel, Condensate Pumps, Antifoam Pumps, FEP Feed Pumps, FEP Concentrate pumps, and FEP/TLP Reboiler Steam Condensate Transfer Stations

The condensate vessels (FEP-VSL-00005 and TLP-VSL-00002), condensate pumps (FEP-PMP-00006A/B and TLP-PMP-00002A/B), and FEP/TLP reboiler steam condensate transfer stations (FEP-VSL-00021, FEP-PMP-00010A/B, FEP-VSL-00022, FEP-PMP-00011A/B, TLP-VSL-00047, TLP-PMP-00012A/B) will be installed indoors in an R2/C3 area. The antifoam vessel (AFR-TK-00001) and antifoam pumps (AFR-PMP-00006, -00007, and -00008) will be installed indoors in an R2/C2 area. The R2/C3 and R2/C2 areas are maintained between

59 to 113 °F dry-bulb temperature during normal operation. Radiation exposure will be 0.5 mRad/hr.

3.6 Feed Pumps

3.6.1 For feed pump requirements, refer to individual MDS in section 2 of the MR and equipment sketches in Appendices I and J of this specification.

3.6.2 Two TLP feed pumps (TLP-PMP-00005A/B) shall be supplied by the Seller in accordance with Buyer's specification 24590-WTP-3PS-MPC0-TP002, *Engineering Specification for General Centrifugal Pumps to Meet Requirements of ASME B73.1M-1991 and ASME B73.2M-1991 for Commercial (CM) Components.*

3.6.3 The TLP feed pumps shall be centrifugal type. Each pump shall be provided with a pump motor mounted on a common base plate for contact maintenance. The pumps are plumbed together for operational flexibility. Seal flush plan to API 7353.

3.6.4 Each TLP feed pump shall be provided with an adjustable speed drive (ASD). The ASD shall be compliant with specification 24590-WTP-3PS-EVV1-T0001, *Engineering Specification for Low Voltage Adjustable Speed Drives* and specification 24590-WTP-3PS-MUMI-T0002, *Engineering Specification for Low Voltage Induction Motors.*

3.6.5 LAW SBS Condensate feed pumps (TLP-PMP-00005A/B) for the TLP evaporator system shall be supplied by the Seller. These pumps shall be designed for contact maintenance and designed for the following operating conditions. All fluid properties are referenced at 77 °F.

- 10 to 38 gpm
- to 16.3 cP
- to 1.41 SG
- 68 to 167 °F
- less than 3 wt % feed solids.

3.6.6 For FEP feed pumps (FEP-PMP-00007A/B), the sections for liquid property and operating conditions on the Mechanical Data Sheets (section 2 of the MR) shall be specified by the Seller. The Buyer will procure pumps which meet these criteria unless otherwise directed by the Seller as described in section 1.2.16. The following operating conditions shall apply. All fluid properties are referenced at 77 °F.

- 20 to 50 gpm
- 4.2 to 12 cP
- to 1.29 SG
- 59 to 122 °F
- 0 to 10 wt % suspended solids

3.6.7 Treated LAW Collection vessel feed pump (CXP-PMP-00002A/B) for the Treated LAW evaporator system will be specified and provided by the Buyer for the following operating conditions. All fluid properties are referenced at 77 °F.

- 22 to 34 gpm
- 0.6 to 5.0 cP
- to 1.26 SG
- 59 to 113 °F
- 0 wt % suspended solids

3.6.8 The feed pump flow rate shall be controlled by the separator vessel liquid level.

3.6.9 All waste feeds shall be transferred by the feed pump into the recirculation line on the suction side of the recirculation pump.

3.6.10 Deleted

3.7 Recirculation Pumps

3.7.1 For recirculation pump requirements, refer to individual MDS in section 2 of the MR and equipment sketches in Appendices I and J of this specification.

3.7.2 The recirculation pumps shall be axial-flow type mounted vertically in an elbow of the recirculation loop. Structural support requirements for the recirculation pump shall be provided by the Seller with provision to transfer loads from the pump to the structural base rather than the pump nozzles or pump shaft/impeller.

3.7.3 Each recirculation pump shall be provided with a pump motor and an adjustable speed drive (ASD). Motors shall be provided with radiation resistant insulation, rated for 10^9 TID rad (gamma). The ASD shall be compliant with specification 24590-WTP-3PS-EVV1-T0001, *Engineering Specification for Low Voltage Adjustable Speed Drives* and specification 24590-WTP-3PS-MUMI-T0002, *Engineering Specification for Low Voltage Induction Motors.*

3.7.4 The recirculating pumps shall have dual mechanical seals that will be lubricated/flushed with water. Flush piping will be based on API Plan 53. Seller shall coordinate with Buyer for details.

3.7.5 Inlet and outlet pipe ends of the recirculation pumps shall be prepared for butt welding.

3.7.6 Seller shall comply with API 610 nozzle loading requirements.

3.7.7 The recirculation pump nozzle locations shall be within (±) 1/4 inch tolerance. However, the tolerance measurement device shall have a minimum of 1/1000 inch accuracy.

3.7.8 The recirculation pump remote flange mating surface shall be approximately at 12 ft-11 inches plant elevation. The pump and motor withdrawal length shall not be greater than 6 ft-1 inch. The dowel pins shall be 2 in diameter with the master

being 1 ft-3 3/4 inches and the secondary being 1ft-3/4 inch. The bolts shall be 1-1/4 inch ACME studs with 2 inches nuts.

3.7.9 The recirculation pumps shall be designed with the following features to ensure ease of process operating with a long expected mechanical lifetime:

- Low operating speed, high flow, and low head process conditions.
- Low casing fluid velocity to minimize wear on the casing.
- Top mounted motor and vertical removal design for easy crane access.
- The recirculation pump motor, impeller, shafting, and seals shall be remotely removable as one unit by using a single crane hook and crane mounted impact wrench with CCTV cameras.

3.7.10 FEP recirculation pumps (FEP-PMP-00009A/B) shall be designed for the following operating conditions. All fluid properties are referenced at 77 °F.

- 11,000 gpm
- 5.5 to 12 cP
- 1.23 to 1.50 SG
- 59 to 140 °F
- 1 to 20 wt % suspended solids

3.7.11 TLP recirculation pump (TLP-PMP-00001) shall be designed for the following operating conditions. All fluid properties are referenced at 77 °F.

- 11,000 gpm
- 0.68 to 30 cP
- 1.33 to 1.57 SG
- 77 to 145 °F
- less than 4 wt % suspended solids

3.8 Concentrate Pumps

3.8.1 For concentrate pump requirements, refer to individual MDS in section 2 of the MR and equipment sketches in Appendices I and J of this specification.

3.8.2 Two TLP concentrate pumps (TLP-PMP-00011A/B) shall be supplied by the Seller in accordance with Buyer's specification 24590-WTP-3PS-MPC0-TP002, *Engineering Specification for General Centrifugal Pumps to Meet Requirements of ASME B73.1M-1991 and ASME B73.2M-1991 for Commercial (CM) Components.*

3.8.3 Deleted

3.8.4 The TLP concentrate pumps shall be centrifugal type. Each pump shall be provided with a pump motor mounted on a common base plate for contact maintenance. The pumps are plumbed together for operational flexibility. Seal flush plan to API 7353.

3.8.5 Each TLP concentrate pump shall be provided with an adjustable speed drive (ASD). The ASD shall be compliant with specification 24590-WTP-3PS-EVV1-T0001, *Engineering Specification for LAW Voltage Adjustable Speed Drives* and specification 24590-WTP-3PS-MUMI-T0002, *Engineering Specification for Low Voltage Induction Motors.*

3.8.6 The concentrate pump flow rate shall be controlled by the specific gravity of the waste concentrate in the evaporator separator vessel.

3.8.7 For FEP concentrate pumps (FEP-PMP-00008A/B), the sections for liquid property and operating conditions on the Mechanical Data Sheets (section 2 of the MR) shall be specified by the Seller. The Buyer will procure pumps which meet these criteria unless otherwise directed by the Seller as described in section 1.2.16. The following operating conditions shall apply. All fluid properties are referenced at 77 °F.

- 3 to 34 gpm
- 5.5 to 12 cP
- 1.23 to 1.50 SG
- 59 to 140 °F
- 1 to 20 wt % suspended solids

3.8.8 The TLP concentrate pumps (TLP-PMP-00011A/B) shall be supplied by the Seller. The pumps shall be designed for contact maintenance and designed for the following operating conditions. All fluid properties are referenced at 77 °F.

- 5 to 14 gpm
- 0.68 to 30 cP
- 1.4 to 1.57 SG
- 68 to 145 °F
- less than 4 wt % suspended solids

3.9 Reboilers

3.9.1 For reboiler requirements, refer to individual MDS in section 2 of the MR and equipment sketches in Appendices I and J of this specification.

3.9.2 The reboilers shall be designed in accordance with Buyer's specification 24590-WTP-3PS-MES0-TP001, *Specification for Shell and Tube Heat Exchangers.*

3.9.3 The reboilers (FEP-RBLR-00001A/B and TLP-RBLR-00001) shall be of all welded construction on both tube and shell sides.

3.9.4 Reboiler tubes shall be seamless and welded to the tubesheet(s) with full strength welds. The tubes shall include a corrosion allowance of 0.04 inch for the process side.

3.9.5 The reboilers shall be capable of sustaining a water evaporation rate of 10 to 30 gpm based on a final SG of 1.50 for the FEP evaporator systems and 1.57 for the TLP evaporator system.

3.9.6 Reboiler process fluid velocity shall be greater than 4.0 ft/sec for solid suspension and not exceed 10 ft/sec velocities for minimal erosion effects.

3.9.7 The reboiler and support frame assemblies shall be designed for remote installation and replacement as one unit.

3.9.8 The reboiler and support frame assemblies shall be designed for horizontal transportation as one unit within the hot cell but for vertical installation with integral tailing features.

3.9.9 The maximum dimensions for a reboiler shall be 6 ft diameter and 15 ft height. The reboiler design shall be either multi-pass or U-tube heat exchanger with side bottom process fluid inlet and outlet.

3.9.10 The reboiler process fluid inlet and outlet nozzles shall be sized not greater than 24 inch diameter. Inlet and outlet pipe ends of the reboiler shall be prepared for butt welding.

3.9.11 Seller shall supply as-built dimensions for the nozzle locations upon completion of fabrication. Measurements shall be taken to the nearest 0.001 inch measuring equipment accuracy shall be within ± 0.006 inch.

3.9.12 Deleted

3.9.13 Low pressure steam of 40 psig will be provided by Buyer. The Seller is responsible for providing steam conditioning skids. Each skid will include a pressure reducing valve and control and a desuperheater to produce Seller's specified saturated pressure steam for reboiler operation.

3.9.14 Seller shall provide specifications for steam condensate removal system. The steam condensate will travel from the reboiler through approximately 100 lateral feet and 2 vertical feet of pipe to the steam condensate vessel.

3.9.15 The reboiler shall be designed such that the static pressure of the process fluid above the reboiler is sufficient to suppress the boiling in the reboiler tubes. Boiling shall occur only near or at the liquid surface in the evaporator separator vessel.

3.9.16 The temperature rise of the process fluid as it passes through the reboiler shall be approximately 2 – 4 °F design basis to minimize the potential for tube fouling.

3.9.17 Reboiler will be installed without insulation. Reboiler duty and steam demand calculations shall include heat loss from all reboiler surfaces without insulation.

3.10 Evaporator Separator Vessels

3.10.1 For separator vessel requirements, refer to individual MDS in section 2 of the MR and equipment sketches in Appendices I and J of this specification.

3.10.2 The separator vessels shall be designed in accordance with Buyer's specification 24590-WTP-3PS-MV00-TP001, *Specification for Pressure Vessel Design and Fabrication.*

3.10.3 The separator vessels shall be designed to maximize liquid – vapor separation and to achieve a 30 gpm feed evaporation rate.

3.10.4 The separator vessels shall incorporate nozzle connections for temperature (including thermowells), pressure, level, and density instrumentation as required. The Seller shall propose reliable measurement instrumentation for Buyer to review.

3.10.5 Deleted.

3.10.6 The top section of the separator vessel shall incorporate lateral guides to the 56 ft floor to minimize horizontal forces and base overturning moments during a seismic event.

3.10.7 The centerline elevation of the separator vessel offgas nozzles shall be no higher than 47 ft-0 inch plant elevation.

3.10.8 The separator vessel heads shall be removable for access to the demister pads section, which contains two layers of 12 inch thick Inconel 625 fine mesh.

3.10.9 The separator vessel shall incorporate a 2 inch inlet nozzle to supply sufficient dilution air to negate hydrogen buildup.

3.10.10 The separator vessel shall incorporate a series of three internal separation trays and an internal two-layer demister pads section to deentrain the steam droplets and remove solids from the vapor.

3.10.11 Spray nozzles shall be provided to allow nitric acid cleaning of the demister mesh and separation trays. The placement of spray nozzles shall accommodate demister section removal and not hinder maintenance operations.

3.10.12 A spray pipe with nozzles located below the lower demister pad shall be provided to spray demin water or recycled condensate into the steam flow to assist in mesh performance.

3.10.13 To improve demister efficiency and facilitate decontamination, the demister pads shall be sprayed from above and below with recycled condensate or 5 M nitric acid from a spray control system located at the 56 ft elevation. Sections of the demister pads shall be able to be sprayed either individually or collectively.

3.10.14 Differential pressure across a series of separation trays and the demisters pad section shall not significantly elevate boiling point.

3.10.15 All nozzle connection points shall be provided clear and below any surrounding floor structural steel at 56 ft plant elevation.

3.10.16 The antifoam nozzles of the evaporator separator vessel shall be located above the uppermost liquid level.

3.11 Primary Condensers

3.11.1 For primary condenser requirements, refer to individual MDS in section 2 of the MR and equipment sketches in Appendices I and J of this specification

3.11.2 Primary condensers shall be designed in accordance with Buyer's specification 24590-WTP-3PS-MES0-TP001, *Specification for Shell and Tube Heat Exchangers*.

3.11.3 The primary condensers (FEP-COND-00001A/B and TLP-COND-00001) shall be of all welded construction on the process fluid side. Tubes shall be welded to the tubesheets(s) with full strength welds.

3.11.4 Seller shall comply with nozzle loading requirements specified in Buyer's specification 24590-WTP-3PS-MV00-TP001, *Specification for Pressure Vessel Design and Fabrication*.

3.11.5 Condensers shall be designed with hinged bonnets to allow isolation of leaking tubes utilizing contact maintenance techniques.

3.11.6 Condensers shall be designed for retubing as part of the maintenance strategy.

3.11.7 Condensers shall be designed to maximize vapor condensation from the offgas streams at a nominal rate of 30 gpm.

3.11.8 Average cooling water temperature rise of 18 °F shall be used for condenser design.

3.11.9 Cooling water (tube side) pressure must exceed the process vapor (shell side) pressure.

3.11.10 The primary condensers shall be compatible with process condensate that has a pH of 7 to10, a temperature of 122 °F, and a 0 to 300 ppm ammonium ion concentration. They shall also be compatible with 5M nitric acid used for separator vessel decontamination.

3.11.11 Primary condenser will be installed without insulation. Primary condenser duty and cooling water demand calculations shall include heat loss from all primary condenser surfaces without insulation.

3.12 Secondary Condenser System

3.12.1 The secondary condenser system shall consist of inter-condenser, after-condenser, and two steam ejectors. For secondary condenser system requirements, refer to individual MDS in section 2 of the MR and equipment sketches in Appendices I and J of this specification.

3.12.2 Inter-condensers and after-condensers shall be designed in accordance with Buyer's specification 24590-WTP-3PS-MES0-TP001, *Specification for Shell and Tube Heat Exchangers.*

3.12.3 Seller shall comply with nozzle loading requirements specified in Buyer's specification 24590-WTP-3PS-MV00-TP001, *Specification for Pressure Vessel Design and Fabrication.*

3.12.4 Inter-condensers and after-condensers shall be of all welded construction on the process fluid side. Tubes shall be welded to the tubesheets(s) with full strength welds.

3.12.5 The boiling point elevation range of the evaporator concentrate for the FEP evaporator system is approximately 11 to 18 °F and for TLP evaporator system is approximately 17 to 24 °F.

3.12.6 The evaporator separator vessel pressure shall be maintained by a two-stage vacuum ejector system. The first stage shall maintain a vacuum on the primary condenser and consists of a steam ejector, air in-bleed control valve, and an inter-condenser. The vapor discharged from the inter-condenser enters the second stage of the vacuum system. The second stage shall consist of a second steam ejector and an after-condenser.

3.12.7 The secondary condenser systems shall provide capability for operating at a vacuum as low as practicably achievable.

3.12.8 The two-stage vacuum ejector system shall be designed to control the separator vessel pressures at between 1.0 and 1.3 psia.

3.12.9 The desired vacuum within the separator vessel shall be obtained by automatically controlling the air in-bleed into the suction side of the first-stage vacuum ejectors.

3.12.10 Process condensate from each condenser shall be individually routed to the process condensate vessel.

3.12.11 All components of secondary condenser skid will be installed without insulation. The duty, cooling water demand, and steam demand calculations shall include heat loss from all surfaces without insulation.

3.12.12 Cooling water pressure must exceed the process vapor pressure.

3.13 Evaporator Process Condensate Vessels & Pumps

3.13.1 For process condensate vessel and pump requirements, refer to individual MDS in section 2 of the MR and equipment sketches in Appendices I and J of this specification

3.13.2 The evaporator process condensate vessels shall be designed in accordance with Buyer's specification 24590-WTP-3PS-MV00-TP001, *Specification for Pressure Vessel Design and Fabrication.*

3.13.3 Seller shall comply with nozzle loading requirements for vessels specified in Buyer's specification 24590-WTP-3PS-MV00-TP001, *Specification for Pressure Vessel Design and Fabrication.*

3.13.4 The FEP evaporator process condensate vessel (FEP-VSL-00005) shall be designed for an operating volume of 4144 gallons (911-gallon batch).

3.13.5 The support frame shall be made such that the overflow nozzle centerline for the FEP evaporator process condensate vessel shall be at or above 15 ft-5 3/8 inches plant elevation.

3.13.6 The TLP evaporator process condensate vessel (TLP-VSL-00002) shall be designed for an operating volume of 2304 gallons (375-gallon batch).

3.13.7 The support frame shall be made such that the overflow nozzle centerline for the TLP evaporator process condensate vessel shall be at or above 17 ft-5 7/8 inches in plant elevation.

3.13.8 The evaporator process condensate vessels shall be equipped with interior wash rings to facilitate decontamination per standard drawing 24590-WTP-MV-M59T-00011.

3.13.9 Evaporator process condensate vessels and pumps shall be designed for contact maintenance.

3.13.10 Process condensate pumps shall be in accordance with Buyer's specification 24590-WTP-3PS-MPC0-TP002, *Engineering Specification for General Centrifugal Pumps to Meet Requirements of ASME B73.1M-1991 and ASME B73.2M-1991 for Commercial (CM) Components.*

3.13.11 Each process condensate pump shall be provided with an adjustable speed drive (ASD). The ASD shall be compliant with specification 24590-WTP-3PS-EVV1-T0001, *Engineering Specification for Low Voltage Adjustable Speed Drives* and specification 24590-WTP-3PS-MUMI-T0002, *Engineering Specification for Low Voltage Induction Motors.*

3.13.12 The process condensate pumps (FEP-PMP-00006A/B and TLP-MPM-00002A/B) shall be centrifugal type. Each pump shall be provided with a pump motor mounted on a common base plate for contact maintenance. The pumps are plumbed together for operational flexibility.

3.13.13 The FEP evaporator process condensate pumps (FEP-PMP-00006A/B) shall be designed for the maximum feed evaporation rate of 60 gpm (30 gpm per FEP evaporator) and maximum steam ejector demands. The TLP Evaporator condensate pumps (TLP-PMP-00002A/B) shall be designed for the maximum feed evaporation rate of 30 gpm and maximum steam ejector demands.

3.13.14 The process condensate vessels and pumps shall be compatible with process condensate that has a pH of 7 to10, a temperature of 68 to 145 °F, and a 0 to 300 ppm ammonium ion concentration. They shall also be compatible with 5M nitric acid used for separator vessel decontamination.

3.13.15 The process condensate pumps shall have the ability to supply adequate condensate to the separation trays and demister pad sprays in the separator vessels.

3.13.16 Single mechanical seals shall be incorporated in each process condensate pump in accordance with American Petroleum Institute (API) Plan 11.

3.13.17 The process condensate pumps shall be designed to comply with pump nozzle loading requirements specified in API 610.

3.14 Antifoam Skid and FEP/TLP Reboiler Condensate Transfer Stations

3.14.1 For antifoam vessel and pump requirements, refer to individual MDS in section 2 of the MR and equipment sketches in Appendix K of this specification.

3.14.2 The antifoam vessel and reboiler condensate vessels shall be designed in accordance with Specification 24590-WTP-3PS-MV00-TP001, *Specification for Pressure Vessel Design and Fabrication.*

3.14.3 Seller shall comply with nozzle loading requirements specified Buyer's specification 24590-WTP-3PS-MV00-TP001, *Specification for Pressure Vessel Design and Fabrication.*

3.14.4 One (1) antifoam system composed of a vessel (AFR-TK-00001) with three metering pumps (AFR-PMP-00006, -00007, -00008) shall supply antifoam reagent to both FEP and TLP evaporator systems.

3.14.5 The antifoam vessel (AFR-TK-00001) shall be designed for a maximum operating volume of 1500 gallons.

3.14.6 Deleted.

3.14.7 Each antifoam vessel shall be equipped with the following:

- Reagent inlet nozzle
- Demineralized water inlet nozzle
- Level instrumentation nozzle
- Agitator to provide homogeneous antifoam solutions

3.14.8 The antifoam pumps shall be positive displacement metering types. The metering pump design shall include an internal relief valve or an internal bypass valve that automatically stops the pumping action when the line pressure gets above a setpoint.

3.14.9 Antifoam vessels and pumps shall be designed for contact maintenance.

3.14.10 Seller shall supply three (3) identical transfer stations, which collect steam condensate drained from the reboilers.

3.14.11 The transfer stations shall be designed to support continuous steady state operation in maintaining nominal operating level while receiving and supplying steam condensate to steam conditioning desuperheater and to a general condensate receiver.

3.14.12 The condensate transfer vessel design and configuration shall support installation of pressure-differential level instrumentation and associated flanged "direct connect diaphragm seal pressure transmitters.

3.14.13 The condensate transfer vessel shall be a vertical oriented vessel constructed of 304L stainless steel with a capacity of 225 gallons.

3.14.14 Each condensate transfer vessel shall be designed to be attached to a mounting ring which will be installed using anchor bolts.

3.14.15 The condensate transfer vessel shall be designed to support a minimum operating volume of 80 gallons.

3.14.16 The condensate transfer pumps shall be vertical turbine pumps with a by-pass valve to limit the pump discharge pressure preventing the motor to become overloaded. The pumps along with their motors shall be mounted on the transfer stations.

3.14.17 Single mechanical seals shall be incorporated in each condensate transfer pump in accordance with American Petroleum Institute (API) Plan 11.

3.14.18 The condensate transfer pumps shall be designed to comply with pump nozzle loading requirements specified in API 610.

3.14.19 The condensate transfer pumps and accessories shall be made of 300 series stainless steel. The pump materials of construction for wetted arts shall be cast high alloy steel 316 SS.

3.15 Mechanical Handling Requirements

3.15.1 Equipment located in the R5/C5 hot cell shall be designed in accordance with Buyer's specification 24590-WTP-3PS-M000-T0002, *General Specification for Mechanical Handling Equipment Design & Manufacture.*

3.15.2 Seller designed equipment shall incorporate jumper connector nozzles to facilitate process, utility, instrument, and power connections to the Buyer supplied jumpers and systems.

3.15.3 Equipment skids shall incorporate jumper nozzles for process pipework (e.g., pump suction and discharge connections, utilities, instrumentation, and power, as required).

3.15.4 Seller shall identify all interface points for systems requiring connection to the Buyer's process piping, jumpers, and utility systems.

3.15.5 The nozzle tolerance requirements for reboiler and recirculation pumps in the R5/C5 hot cell shall be ±1/4 inch. The nozzle tolerance measurement device shall have a minimum of ±1/1000 inch accuracy. Jumpers shall be built to as-built dimensions and replaced with equipment as necessary.

3.15.6 Deleted

3.15.7 Deleted

3.16 Loadings

3.16.1 The evaporator equipment assemblies shall be self-supporting, capable of carrying the static loads of components, and capable of handling stresses imposed during shipment, installation, operation and an earthquake.

3.16.2 Loads to be considered for the structural design of evaporator vessel, equipment, and components shall be in accordance with applicable codes, standards, and reference documents listed in section 2 of this specification.

3.16.3 All vessels or equipment with SC-I and SC-II designation shall be seismically analyzed and qualified in accordance with AISC N690.

3.16.4 All vessels or equipment with SC-III and SC-IV designation shall be seismically analyzed and qualified in accordance with the AISC ASD and UBC zone 2B.

3.16.5 Seller shall complete a seismic analysis of the evaporator package designs, including skids, and skid anchorage, equipment and pressure vessel anchorage, piping anchorage. Loadings shall be calculated in accordance with the appropriate requirements of Buyer's specifications 24590-WTP-3PS-SS90-T0001, Engineering Specification for Seismic Qualification of Seismic Category I/II Equipment and Tanks, and 24590-WTP-3PS-FB01-T0001, Structural Design Loads for Seismic Category III & IV Equipment and Tanks. Analysis shall show that the evaporator system and components are capable of withstanding seismic loadings.

3.16.6 All vessels, heat exchangers, and any other pressure containing vessels or equipment shall be seismically analyzed and qualified by the Seller per Buyer's specification 24590-WTP-3PS-MV00-TP002, *Engineering Specification for Seismic Qualification Criteria for Pressure Vessels,* Buyer's specification 24590-

WTP-3PS-MV00-TP001, *Specification for Pressure Vessel Design and Fabrication.*

3.16.7 The Seller shall perform thermal and static stress analyses for all evaporator structures, systems, and components.

3.16.8 Except for reboiler and recirculation pump skids, all equipment skids shall be designed for a maximum floor loading of 160 lbs/ft^2. Refer to drawings 24590-PTF-DD-S13T-00022, 24590-PTF-DD-S13T-00025, 24590-PTF-DD-S13T-00028, 24590-PTF-DD-S13T-00027, 24590-PTF-DD-S13T-00036, 24590-PTF-DD-S13T-00042, 24590-PTF-DD-S13T-00043, and 24590-PTF-DD-S13T-00044 for structural concrete embed details.

3.16.9 The embed location for reboilers are detailed on drawings 24590-PTF-DD-S13T-00025, 24590-PTF-DD-S13T-00027, 24590-PTF-DD-S13T-00028, AND 24590-PTF-DD-S13T-00049. Each embed has a support post which connects to the PEP. To avoid displacement in skid under the heavy reboiler weight, reboiler frame shall rest upon support posts with the embeds underneath. These embeds are type "D" which have been esigned for ultimate compressive strength of 100 kips.

3.16.10 The flow meter unit of the steam conditioning skids for the FEP and TLP evaporator systems are SC-III items and may not be qualified at the accelerations defined in the Buyer's specification for Seismic Qualification of Seismic Category I/II Equipment and Tanks, and 24590-WTP-3PS-FB01-T0001. Equivalent test can be performed and considered successful if there is no physical damage to the instrument. For the equivalent test, the flow meter units will undergo a frequency sweep (0 to 500 Hz) to determine their resonant frequency. Once the resonant frequency is determined, the units are tested at 1 g vertical and then 1 g horizontal for a period of twenty minutes each, all while being excited at the resonant frequency.

3.17 Electrical Requirements

3.17.1 The electric motor drive shall conform to the requirements set forth in Buyer's specification 24590-WTP-3PS-EVV1-T0001, *Engineering Specification for Low Voltage Adjustable Speed Drives.*

3.17.2 The pump motor and all other motors in this evaporator package shall conform to the requirements set forth in Buyer's specification 24590-WTP-3PS-MUMI-T0002, *Engineering Specification for Low Voltage Induction Motors.*

3.17.3 Seller shall comply with the requirements set forth in Buyer's specification 24590-WTP-3PS-EKP0-T0001, *Engineering Specification for Electrical Requirements for Packaged Equipment.*

3.18 Instrumentation and Control Requirements

3.18.1 General

3.18.1.1 All controls, control systems, control panels, alarm systems, analyzers, instrumentation, and their installation into the evaporator system shall conform to the requirements set forth in Buyer's specification 24590-WTP-3PS-JQ07-T0001, *Engineering Specification for Instrumentation for Package Systems.*

3.18.1.2 The Seller shall provide instrument data sheets and installation details. The Buyer will use this information for procurement and installation of required instrumentation.

3.18.1.3 The Seller shall provide functional test set points and recommended operating set points with the packaged systems.

3.18.1.4 The Seller shall supply the control requirements, which shall consist of the control loop definitions, system interlocks, alarms, and control philosophy.

3.18.1.5 The Buyer will use the Seller's control requirements to provide the software requirement specification for logic programming and DCS hardware, which will integrate the Seller's control requirements into the Buyer's overall control system.

3.18.1.6 Seller shall comply with NQA-1 1989, 11S-2, for computer program testing.

3.18.1.7 The following table describes the work processes and the division of the responsibilities:

	Buyer's Responsibility	Seller's Responsibility
Blank Instrument Data Sheet	•	
Complete Instrument Data Sheet		•
Instrument Installation Details		•
Instrumentation Procurement	•	
Instrumentation Installation	•	
Functional Test Set Points		•
Operating Set Points		•
Control Requirements		•
Software Requirements Specification	•	
Logic Programming	•	
DCS Hardware	•	

3.18.2 Other

The Seller shall select level, specific gravity, temperature, and pressure instrumentation that shall provide accuracy of the measured range as specified in Buyer's specification 24590-WTP-3PS-JQ07-T0001, *Engineering Specification for Instrumentation for Package Systems.*

3.19 Lifting Requirements

3.19.1 Seller shall identify the weight and center of gravity of each equipment skid.

3.19.2 Seller shall provide yokes for separator vessels, reboiler and support assemblies, and recirculation pumps for installation and remote maintenance. Each part will be made of 304SS. The yokes shall be designed for balanced lifting and handling by a single hook crane. The yokes shall be designed in accordance with ANSI N14.6 and Buyer's specification 24590-WTP-3PS-MJJ0-T0001, *Specification for Lifting Beams for Mechanical Handling Equipment.*

3.19.3 All evaporator equipment and skids shall have lift points and attachment mechanism. Lifting bail design shall comply with proposal hook design shown in Appendix G.

3.19.4 All lifting attachments shall have either a safety factor of three (3), based on the material yield strength, or five (5), based on the material ultimate strength, whichever is more conservative. The lifting points shall have a label clearly identifying its safe working load. If forged bolts are used, they shall be used in accordance with ASME B18.15.

3.19.5 The reboiler and support assemblies shall be designed for horizontal transportation in the hot cell. The reboiler and support assemblies shall have tailing lug and tilt-up features for vertical installation with a 2-ton hoist for tailing operation.

3.19.6 The lifting lugs shall be designed to permit lifting the equipment skid without distortion or damage to the components of the equipment skid.

3.19.7 All lifting points shall be proof tested in situ. Test and examination certificates shall be provided to the Buyer review.

3.19.8 Each reboiler and support frame assembly shall be lift tested by the Seller to demonstrate proper vertical orientation using the Seller-supplied lifting fixture. This testing includes verification of all tilt up features. Each reboiler shall be balanced after fabrication. Actual vertical lift (with vessel empty) shall not be more than 1/4 inch from true verticality. Permanent deflection or a change in the assembly alignment is unacceptable. The Seller shall notify the Buyer a minimum of 15 working days in advance of reboiler and support frame assembly lift test. The Buyer may send representatives to witness the inspections or perform an independent inspection.

3.20 Accessibility and Maintenance

3.20.1 General Maintenance Requirements

Accessibility and maintenance requirements shall be per this specification and its addenda and attachments.

3.20.2 R5/C5 Black Cell Equipment Maintenance Requirements

3.20.2.1 No equipment requiring maintenance, with the exception of demister pads, shall be located inside the R5/C5 black cells (rooms P-0106 and P-0117). The nonreplaceable 40-year life components shall include offgas piping, separator vessels and all its internal parts (except demister pads) and their supporting structures/anchorage.

3.20.2.2 Demister pad assembly shall be remotely removable and replaceable through a 10-foot diameter opening from the 56-foot elevation floor, rooms P-0304 and P-0311, which are directly above the black cells P-0106 and P-0117. If the water connections for the spray connections for the spray down mechanism are incorporated into the pad assembly, the connections shall utilize a quick disconnect type connection for the water source. Due to potential radiation and contamination concerns, viewing and removal of the of the demister pad will be accomplished with the top demister pads submerged approximately 6-inch below the water during the maintenance duration. Seller shall demonstrate and record on VHS format video tape demister pad removal and replacement in their shop test.

3.20.3 R5/C5 Hot Cell Equipment Maintenance Requirements

3.20.3.1 Reboiler and support frame assemblies and recirculation pumps in the R5/C5 hot cell shall be designed to be remotely removable and replaceable in accordance with specification 24590-WTP-3PS-M000-T0002, *General Specification for Mechanical Handling Equipment Design and Manufacture*. No components shall require special tools.

3.20.3.2 Reboiler and support frame assemblies and recirculation pumps in R5/C5 hot cell shall be designed in accordance with the requirements stated within this specification.

3.20.3.3 Each reboiler and support frame assembly shall not weigh more than 27.5 tons, including all required lifting fixtures.

3.20.3.4 All fittings, pipe connections, electrical power, and control connections for equipment in R5/C5 hot cell shall be engineered on jumpers suitable for remote operation using a crane hook and crane mounted impact wrench with CCTV cameras.

3.20.3.5 Reboiler and support frame and recirculation pumps shall be made suitable for remote operation utilizing features such as trunnions, guide pins, location dowels, captive bolts, and lead-ins on bolts, and be able to be removed using a crane hook and crane mounted impact wrench with CCTV cameras. Refer to Appendix G for remote impact wrench and drawings nos. 24590-WTP-M0-M10T-00004 and 24590-PTF-M0-PIH-00008 for crane details.

3.20.3.6 The use of shims to position reboiler and support frame assemblies or recirculation pumps in the R5/C5 hot cell is not allowed. All

surfaces shall be machined to locate equipment and support remote handling and replaceability.

3.20.3.7 Due to the requirement of a 12-foot reserved path for equipment removal in the hot cell, Seller shall comply with the location requirements for reboiler and support frame assemblies and recirculation pumps as shown in sketches in Appendices I and Q.

3.20.3.8 All services to or from the recirculation pumps shall be provided using jumper connections.

3.20.3.9 The maximum height of any 2-inch hex nut (jumper connector), oriented vertically, is 24 ft-6 inches in plant elevation.

3.20.3.10 The maximum height of any 2-inch hex nut (jumper connector), oriented horizontally, is 25 ft-6 inches in plant elevation.

3.20.3.11 The maximum height of the 2 ton slewing hoist is 28 ft-6 inches.

3.20.3.12 The maximum height and hook approach of the 30 ton hook is distinctly different than the 2 ton hoist. Refer to the crane data sheet, 24590-PTF-MJD-PIH-00001 for details.

3.20.4 Deleted.

4 Materials

4.1 Positive Material Identification

Refer to Buyer's specification 24590-WTP-3PS-G000-TP002, *Specification for Positive Material Identification (PMI)* for PMI requirements. Seller shall submit documentation of all PMI test results which show chemical properties and material classification.

4.2 Construction

4.2.1 Seller shall specify surface finish for all materials and submit to Buyer for review.

4.2.2 Seller shall maintain a record of ASTM numbers, material test reports, and manufacturer material certifications for all materials used for construction of evaporator equipment/skids. Seller shall provide copies to the Buyer.

4.2.3 All stainless steel bolts and studs shall conform to ASTM F593.

4.2.4 All stainless steel nuts shall conform to ASTM F594.

4.2.5 Seller shall provide Material Safety Data Sheets (MSDSs) for all materials installed or used.

4.2.6 Process fluids may contain caustic solutions (50 wt % caustic), however 5 M nitric acid solutions may also be used for decontamination of the pipework, pumps, valves, and instruments/instrument tubing both inside and outside of the pipework assembly.

4.2.7 All flanges and pipe fittings shall conform to ASME B31.3 1996 and be weld-neck and long radius type, respectively, unless otherwise specified. Flanges shall also be in accordance with ASME B16.5, and B16.47 Series A, as applicable.

4.2.8 No threaded flanges or fittings shall be used.

4.2.9 Certified material test reports shall be supplied for all stainless steel pipe, plate, sheet, and sections.

4.2.10 Selection of materials for threaded components shall minimize galling. Where the Seller determines that potential for galling is present assuming proper removal and reinstallation, designs shall be considered that favor components that are difficult to replace remotely. The Seller shall also consider different material selection, sleeving, etc. where practical.

4.2.11 All materials used in the construction of the evaporator equipment shall be new and unused. Where specific criteria are not provided, material section shall be determined by the Seller and have properties and composition suitable for the specific service conditions and consistent with this specification and its addenda and attachments.

4.2.12 The alternate ASTM and ASTM standard editions listed below can be used in lieu of the edition in effect.

Alternate Materials	Specified Materials
ASTM A182-98, A182-01	ASTM A182/A182M-99
ASTM A312-04	ASTM A312/A312M-00c
ASTM A403-95	ASTM A403/A403M-99
ASTM A403-99	ASME Section II Part A, 2001 Edition 2002 Addenda, SA-403 / ASTM A403-95
ASTM A182-98	ASME Section II Part A, 2001 Edition 2002 Addenda, SA-182 / ASTM A182-99
ASME 2001 Edition SA-312, 2003 Addenda SA-312 ASME 1995 Edition SA-312, 1995 Addenda SA-312	ASME Section II Part A, 2001 Edition 2002 Addenda, SA-312 / ASTM A312-00c
ASME 1998 Edition SA-240, 2003 Addenda SA-240	ASME Section II Part A, 2001 Edition 2002 Addenda, SA-240 / ASTM A240-97a

ASME 1997 Addenda SA-240	
ASTM A240-00, -02, -03, -03c, - 04a	ASTM A240/A240M-03b
ASME SFA 5.22 Part C - 1995 Edition 1996 Addenda	ASME SFA 5.22, Section II, Part C 2001 Edition 2002 Addenda
ASTM A480-03c	ATM A480-03b
ASTM 554-98, -03	ASTM 554-98el
ASME SFA-5.9, SFA5.22 Sec III, Subsec NB, 1995 Edition, 1996 Addenda	ASME Code, Section II, 2001 Edition with 2002 Addenda (weld wire)
ASME A240-00, -00 /A240-01	ASME A240/A240M-03b

4.3 Vessels

Vessel materials shall conform to individual MDS in section 2 of the MR.

4.4 Pipework

Pipework material shall meet the piping material requirements in Buyer's specification 24590-WTP-3PS-P000-T0001, *Specification for Piping Material Classes.*

4.5 Prohibited Materials

4.5.1 Mercury and other low melting point metals, their alloys, or materials containing such metals as their basic constituents shall not be used in the construction of any components of the evaporator systems.

4.5.2 Molybdenum and halides shall not be used in direct contact with stainless steel.

4.5.3 Asbestos shall not be included in any component of the evaporator systems.

4.5.4 Halide containing materials shall not be used in any component of the evaporator systems.

4.5.5 "Teflon" or compounds thereof must be qualified for use with the radiation levels specified in this specification.

4.6 Storage of Special Materials (e.g., stainless steel) prior to work

4.6.1 The Seller shall meet the storage requirements in Buyer's specification 24590-WTP-3PS-G000-T0003, *General Specification for Packaging, Shipping, Handling, and Storage Requirements.*

4.6.2 Stainless steel is susceptible to corrosion caused by the contact and interaction with incompatible materials. All stainless steel material shall be stored in separate areas away from other materials.

5 Fabrication

The Seller shall obtain written Final Design Review from the Buyer prior to the start of fabrication activities.

5.1 General

5.1.1 Fabrication of vessels shall be performed in accordance with Buyer's specification 24590-WTP-3PS-MV00-TP001, *Specification for Pressure Vessel Design and Fabrication.*

5.1.2 Fabrication of pipework shall be performed in accordance with Buyer's specification 24590WTP-3PS-PS02-T0001, *Specification for Shop Fabrication of Piping.*

5.1.3 Fabrication of mechanical handling equipment shall be performed in accordance with Buyer's specification 24590WTP-3PS-M000-T0002, *General Specification for Mechanical Handling Equipment Design and Manufacture.*

5.1.4 All fabrication shall be performed by personnel qualified in accordance with this specification and applicable documents in section 2 of this specification.

5.2 Welding

5.2.1 Seller shall develop detailed welding, weld inspection, NDE, and weld repair procedures for fabrication of the evaporator vessel, equipment, and structural supports. Seller shall submit them to the Buyer for review prior to fabrication. Procedures shall include acceptance criteria. The procedures shall conform to the following, as applicable:

- Buyer's Specification 24590-WTP-3PS-SS00-T0002
- Buyer's Specification 24590-WTP-3PS-NWP0-T0001
- Buyer's Specification 24590-WTP-3PS-MVB2-T0001
- ASME Boiler and Press Vessel Code, section VIII, Div. 1
- ASME B31.3-1996
- AWS D1.6

- AWS D9.1

5.2.2 Welding, weld inspection, NDE, and weld repair shall be carried out in accordance with the applicable procedures developed per section 5.2.1 above.

5.2.3 Each procedure shall be prepared and qualified in accordance with the requirements of the listed specification and standards in 5.2.1 above or ASME section IX, whichever is more stringent.

5.2.4 Welder qualifications shall be performed in accordance with ASME section IX or AWS as required.

5.2.5 Personnel performing weld inspection shall be qualified in accordance with ASME Boiler and Pressure Vessel Code, section VIII, Div. 1 and Buyer's specification 24590-WTP-3PS-SS00-T0002, *Specification for Welding of Structural Stainless Steel and Welding of Structural Carbon Steel to Structural Stainless Steel.*

5.2.6 Repairs required as a result of weld rejection by either the Buyer's or Seller's final inspection shall be fully documented in accordance with Seller's Quality Assurance Program (QAP). Weld repairs shall be performed in accordance with ASME Boiler and Pressure Vessel Code, section VIII. Weld repair records shall be included with Seller's quality verification document package to be submitted to Buyer.

6 Inspections and Examinations

6.1 Nondestructive Examinations

6.1.1 Unless otherwise specified, all vessel welds shall be inspected in accordance with the requirements outlined in the Buyer's specification 24590-WTP-3PS-MV00-TP001, *Specification for Pressure Vessel Design and Fabrication.*

6.1.2 Unless otherwise specified all pipework welds shall be inspected in accordance with the requirements outlined in Buyer's specification 24590-WTP-3PS-PS02-T0001, *Specification for Shop Fabrication of Piping.* For nondestructive examination (NDE) of fabricated pipe welds. Appendix O of this evaporator specification, 24590-PTF-3PS-MEVV-TP001, shall be used in replacement of Appendix A of specification for Shop Fabrication of Piping, 24590-WTP-3PS-PS02-T0001.

6.2 Dimensional Inspections

6.2.1 Refer to Buyer's specification 24590-WTP-3PS-PP00-T0002, *Specification for Dimensional Record Program,* for final dimensional measurement requirements. Third party validation of special dimensional inspection is not required.

6.2.2 Buyer's specification 24590-WTP-3PS-PP00-T0002, *Specification for Dimensional Record Program*, is applicable only to recirculation pumps and reboiler and support frame assemblies and does not apply to any other components.

6.2.3 For recirculation pumps, a dimensional record is required for remotable pump features that are not part of the process jumper. The process portion of the recirculation pump will be installed in a jumper, and the jumper dimensional record will be performed by the Buyer.

6.2.4 For reboilers, all remote connector nozzles shall be measured to precise as-built dimensions.

6.2.5 Seller shall furnish personnel to perform measurement activities.

6.3 Visual Weld Inspections

6.3.1 The Seller shall develop and implement a procedure to perform visual weld inspections (visual tests, VT) to inspect each weld. The inspection procedure shall be developed in accordance with Buyer's specification 24590-WTP-3PS-MVB2-T0001, *Specification for Welding Pressure Vessels, Heat Exchangers and Boilers* and ASME B31.3 1996, and shall include inspection materials and acceptance criteria.

6.3.2 Acceptance criteria for visual weld inspections for vessels shall be in accordance with Buyer's specification 24590-WTP-3PS-MVB2-T0001, *Specification for Welding Pressure Vessels, Heat Exchangers and Boilers* and for pipework shall be in accordance with ASME B31.3 1996.

6.3.3 The Seller shall prepare a visual weld inspection report for each fabricated item.

6.3.4 Deleted.

6.3.5 Deleted.

6.3.6 The Seller shall notify the Buyer in advance of inspections. The Buyer may send representatives to witness inspections or perform independent inspections.

6.4 Liquid Penetrant Test

6.4.1 The Seller shall develop and implement a procedure to perform a liquid penetrant test (PT) to inspect each weld. The procedure shall be developed in accordance with Buyer's specification 24590-WTP-3PS-MVB2-T0001, *Specification for Welding Pressure Vessels, Heat Exchangers and Boilers* and ASME B31.3 1996, and shall include inspection materials, dwell time for dye and developer, and acceptance criteria.

6.4.2 Acceptance criteria for PT inspection shall be in accordance with Buyer's specification 24590-WTP-3PS-MVB2-T0001, *Specification for Welding*

Pressure Vessels, Heat Exchangers and Boilers and for pipework shall be in accordance with ASME B31.3 1996.

6.4.3 The Seller shall prepare a liquid penetrant test report for each weld connection on each fabricated item.

6.4.4 Deleted.

6.4.5 Deleted.

6.4.6 The Seller shall notify the Buyer in advance of testing. The Buyer may send representatives to witness testing or perform independent tests.

6.5 Radiography

6.5.1 Radiographic examinations shall be carried out on all primary containment pipework butt-welds using 100 % radiography for QL components. For all other quality levels, refer to Appendix O of this specification for radiographic examination requirements.

6.5.2 The Seller shall develop and implement a procedure to perform radiographic weld examinations of piping butt-welds. The procedure shall be developed in accordance with ASME B31.3 1996, and shall include examination materials and acceptance criteria.

6.5.3 Deleted.

6.5.4 Deleted.

6.5.5 The Seller shall provide radiographic film with technique and reader sheets. Exposed film must be sent, along with a copy of the technique and reader sheets in accordance with section 3 of the MR. Film must be suitably packaged to preclude moisture and handling damage.

6.5.6 The Seller shall notify the Buyer in advance of examinations. The Buyer may send representatives to witness or perform independent examinations.

6.6 Magnetic Particle Examination

6.6.1 The Seller shall develop and implement a procedure to perform magnetic particle examination. The procedure shall be submitted to the Buyer for review prior to fabrication.

6.6.2 Magnetic particle examination (MT) shall be in accordance with ASTM Specification E709.

6.6.3 Acceptance criteria shall be in accordance with the AWS code.

6.7 Final Inspection

6.7.1 The Seller shall develop and implement a procedure for final inspection of each fabricated item. The inspections shall be performed after completion of all fabrication, cleaning, and testing, and just prior to final packaging. The inspections shall include inspection of all surfaces for contamination. Visible evidence of contamination is not acceptable.

6.7.2 The Seller shall prepare a final inspection report for each item, which documents the results of the final inspection. The Seller shall include the final inspection report in the documentation package for each piece.

6.8 Inspection and Test Status

The Seller shall maintain a positive system for identifying inspection and testing status of items and systems.

6.9 Control of Nonconforming Items

The Seller shall use the Supplier Deviation Disposition Request per MR section 2 to notify the Buyer of fabricated items and fabrication activities not conforming to the requirements. Any nonconforming work shall be redone by the Seller at Seller's cost.

7 Testing

7.1 Shop Tests

7.1.1 The Buyer reserves the right to witness all shop tests and shall be given a minimum of 10 working days written notice prior to each test date.

7.1.2 All pipework shall be hydrostatically tested in accordance with ASME B31.3 1996. Test water used for hydrostatic testing shall be tested for chlorides. The chloride content of the test water shall not exceed 50 ppm and the water temperature shall not exceed 120 °F. Buyer shall review all test pressures prior to commencement of any testing. The testing results shall be documented and provided to Buyer.

7.1.3 Testing of vessels shall be performed in accordance with Buyer's specification 24590-WTP-3PS-MV00-TP001, *Specification for Pressure Vessel Design and Fabrication.*

7.1.4 Functional tests of evaporator equipment/skids shall be performed by the Seller.

7.1.5 Seller shall demonstrate and record on VHS format video tape demister pad removal. Test shall be done with equipment representative of what will actually be installed and utilized in the Buyer's facility.

7.1.6 Seller will furnish lifting yokes details for separator vessels, reboiler and support frame assemblies, and recirculation pumps. All Seller supplied lifting yokes shall be load tested to 1.5 times the design load.

7.1.7 Each evaporator equipment skid shall be lift tested by the Seller to demonstrate proper vertical orientation using the Seller-supplied tooling and fixtures. This testing includes verification of all tilt up features. During the lift test the deflection at the midpoint of each skid shall be monitored and recorded to ensure that proper alignment is maintained. The centerline of the evaporator skid shall be within ±1 inch of true vertical when measured from the lift point. Permanent deflection or a change in the evaporator skid alignment is unacceptable.

7.1.8 Seller shall furnish blind flanges or other acceptable closures for the nozzles, as required for hydrotesting. Closures shall be removed after testing, unless they are required for shipment.

7.1.9 Deleted.

7.1.10 All test results shall be documented, certified, and submitted to the Buyer for review.

7.2 Integrated Acceptance Tests

An Integrated Acceptance Test will be performed by the Buyer at the Buyer's site on each fully assembled evaporator system to verify that the functional requirements and process control requirements of this specification have been met. Tests shall be performed per Buyer's testing program. Seller shall provide the Buyer procedures suggesting how the evaporator systems shall be functionally tested. The Seller shall be responsible for equipment performance during the tests. The procedures shall include the following:

7.2.1 Performance Testing

7.2.1.1 Limiting the entrainment of radionuclides from the evaporator to the primary condenser is an important safety function. During cold commissioning, the performance of the evaporator system will be measured using surrogate chemicals to determine the degree of entrainment from the evaporator to the primary condenser. Stable (nonradioactive) cesium will be the surrogate of choice for simulating radionuclide carryover to the condensing system.

7.2.1.2 Steady state operation is defined as:

- Liquid density of the concentrate ranges from 1.22 to 1.25 g/ml at operating temperature.
- Sodium cation and nitrate, hydroxide, chloride anions are the predominate soluble chemical analytes in the concentrate.
- The soluble concentration of stable (nonradioactive) cesium in the evaporator bottoms (concentrate) is no greater than 41.5 milligrams per liter.

7.2.1.3 The following criteria must be met prior to final acceptance of the evaporator system design:

- At steady state operation, the time-average mass rate of stable (nonradioactive) cesium carry-over from the evaporator to the condensing system shall not exceed 1.0 E-04 gram during any 24 hour period.

- At steady state operation, the instantaneous mass rate of stable (nonradioactive) cesium carry-over from the evaporator to the condensing system shall not exceed 1.0 E-03 gram in any one (1) hour period.

7.2.1.4 The performance testing and acceptance criteria shall apply over a boil-off range from 10 gpm to 30 gpm of total condensate, as measured in the condensate receiver vessel.

7.2.1.5 Performance testing shall be corrected for uncertainty in instrument and analytical measurements.

7.2.1.6 Relative performance indicators include:

- The estimated mass distribution ratio (mass rate of cesium removed with the overhead/mass rate of cesium in the feed) at steady state is approximately 1.0E-07.
- The estimated decontamination factor (concentration of cesium in the feed / concentration of cesium in the overheads) at steady state is approximately 8.0E+06.
- The estimated concentration of cesium in the condensate from the condensing system ranges from 6.0E-04 to 1.8E-03 microgram per liter.

7.2.2 A full simulation of abnormal shutdown conditions.

8 Preparation for Shipment

8.1 General Requirements

8.1.1 The evaporator equipment/skids shall be packaged/prepared for shipment, handled, and stored in accordance with the following requirements in

- Section 7 of the MR.
- Buyer's Specification 24590-WTP-3PS-G000-T0003, *General Specification for Packaging, Shipping, Handling, and Storage Requirements.*
- Buyer's Specification 24590-WTP-3PS-PS02-T0001, *Specification for Shop Fabrication of Piping.*
- Buyer's Specification 24590-WTP-MV00-TP001, *Pressure Vessel Design and Fabrication.*

8.1.2 Seller shall ensure that appropriate documentation is prepared and, if required, signed by the appropriate person(s). The shipping documentation shall accurately reflect specific traceability to the items being shipped.

8.1.3 Seller shall ensure that appropriate documentation is prepared for the evaporator equipment/skids. At a minimum, documentation shall include the following information, as applicable:

- Manufacturer name, model number, and serial number.
- Skid number.
- Plant item number.

8.1.4 Solvents and cleaning solutions used on stainless steel shall have a halogen content of less than 200 ppm.

8.1.5 Recirculation pumps will be shipped only in temporary shipping skids not meant for installation. The reboiler and support frame assemblies shall be transported from the Seller site to the Buyer site in the horizontal orientation due to air lock size limits.

8.1.6 Separator vessels will be shipped on temporary shipping skids. The installation skids are shipped separately, each in two pieces because of their height.

8.1.7 Lifting weight shall be clearly marked on both the equipment skid and its shipping documentation.

8.1.8 Regarding Buyer's Specification 24590-WTP-3PS-PS02-T0001, *Specification for Shop Fabrication of Piping,* polyethylene wrap can be used and subsequent blocking using Styrofoam cushioning and equivalent backed by plywood/wood to provide protection against damage or access by elements.. Special end caps are not required.

8.2 Painting

8.2.1 Stainless steel shall not have coating applied.

8.2.2 Seller shall submit the information requested on Form H (see appendix S) along with technical data sheet and MSDS. Supplier shall provide Certificate of Conformance verifying application of coating in compliance with coating manufacturer's Technical Product Data Sheet.

8.2.3 All painting and coating shall be applied in accordance with the manufacturer's directions for application.

8.2.4 Exposed carbon steel surface shall be primed and painted with enamel base coating in accordance with the coating manufactures surface and application requirements.. All visible oil, grease, dust, dirt, mill scale, rust, coating, oxides, corrosion products and other foreign matter shall be removed prior to application of primer. See section 8.2.14 and 8.2.15 for custom fabricated equipment.

8.2.5 In the absence of standard manufacturer's colors, the finish coat of all carbon steel items and equipment shall be ANSI 70 Gray. Contrasting colors shall be used for fasteners and bails.

8.2.6 Repainting by the Seller, or custom finishing by the manufacturer shall not be required when commercially available components and equipment which are normally mass produced, inventoried, supplied from stock, and have been coated with the manufacturer's standard coating system.

8.2.7 Surfaces exposed to the environment, but inaccessible after assembly, shall be coated prior to assembly.

8.2.8 Painting of interior and enclosed surfaces of the equipment, such as inside a welded box section, is not required.

8.2.9 Machined carbon steel mating surfaces and other surfaces not protected by coating system (such as seal surfaces, threaded surfaces, lifting hooks, hook nuts, wheel treads, gears, shafts, pinions, and couplings), shall be protected with a solvent cutback asphalt temporary preservative (Dauber Chemical Tectyl 891, EF Houghton Chemical Rust Veto 342 or Buyer's accepted equivalent) for shipment and storage. The Seller shall specify which preservatives must be removed and how the preservatives are removed by the Buyer before operation of the equipment.

8.2.10 Welds shall be coated only after completion of the required tests. Required tests include leak tightness, hydrostatic testing or other NDE of the welds.

8.2.11 Filler, sealant, and caulking compounds shall be compatible with the coating system.

8.2.12 The lifting fixtures for separator vessel shall be safety yellow # 13655 in accordance with FEP-STD 595B, *Colors Used in Government Procurement*. The lifting fixtures can be coated with the manufacturer's standard coating systems.

8.2.13 Items covered by 8.2.14 and 8.2.15, shall be surface prepared in accordance with SSPC SP10. For repair, the surfaces shall be prepared in accordance with SPPC SP11.

8.2.14 For support frames for steam conditioning skids and reboiler transporter, Seller shall use two coats (P04) of Epoxy with 4-6 mils per coat. Acceptable coating products for P04 are as follows:

8.2.14.1 Amercoat 385 from Ameron

8.2.14.2 Carboguard 890 from Carbonline

8.2.14.3 224HS from Devoe

8.2.14.4 Protecto-Coat 330 or 300 from Dudick

8.2.14.5 Intergard 475HS from International

8.2.14.6 Macropoxy 646 from Sherwin Williams

8.2.15 For reboiler and recirculation pump lifting beams, Seller shall use three coats with 1st coat (P02) of Epoxy Primer with 3-5 mils and (P06) Epoxy Novolac with 5 - 10 mils for 2nd and 3rd coats. Acceptable coating products for P02 are as follows:

8.2.15.1 Amercoat 68HS from Ameron

8.2.15.2 Carbozinc 859 from Carbonline

8.2.15.3 313 from Devoe

8.2.15.4 Interzinc 52 from International

8.2.15.5 Zinc Clad IV from Sherwin Williams

Acceptable coating products for P06 are as follows:

8.2.15.6 Amercoat 91 from Ameron

8.2.15.7 Phenoline 1205 FR from Carbonline

8.2.15.8 253 from Devoe

8.2.15.9 Protecto-Coat 100XT or EN from Dudick

8.2.15.10 Intertherm 875 HS from International

8.2.15.11 Macropoxy 646 from Sherwin Williams

8.3 Tagging

8.3.1 Tagging of the evaporator component, equipment, and skids shall be per this specification and the applicable documents listed in section 2 of this specification.. Plant item numbers for evaporator component/equipment shall be per the data sheets that are in section 2 of the MR.

8.3.2 Instruments shall have nameplates installed per section 8 of Buyer's specification 24590-WTP-3PS-JQ07-T0001, *Engineering Specification for Instrumentation for Package Systems*.

8.3.3 Motors shall have nameplates per section 3 of Buyer's specification 24590-WTP-3PS-MUMI-T0002, *Engineering Specification for Low Voltage Induction Motors.*

8.3.4 Packages shall be suitably marked on the outside to facilitate identification of the purchase order, the procurement specification, the package contents, and any special handling instructions.

8.3.5 Slinging points and orientation for storage shall be clearly marked.

8.3.6 Temporary material such as bolting and shipping material shall have clear identification per sections 3.13 and 3.13.12 of Buyer's specification 24590-WTP-GPP-GCB-00100, *Field Materials Management.*

8.3.7 A stainless steel nameplate shall be rigidly attached to the evaporator equipment skid packages in a prominent position for ease of visibility, and shall include the following:

- Manufacturer's name.
- Shop location.
- Date of manufacture.
- Serial number.
- Equipment rating (pressure, temperature and flow).
- Skid number.
- Plant item number.
- Weight of assembly.
- Purchase order number.

9 Quality Assurance

9.1 General Commercial Designation (CM) Requirements

9.1.1 The Seller's Quality Assurance Program (QAP) Requirements are included in 24590-WTP-3PS-G000-T0001, *Supplier Quality Assurance Program.*

9.1.2 Seller's QAP Manual shall be submitted to buyer for review in accordance with 24590-WTP-3PS-G000-T0001, *Supplier Quality Assurance Program.*

9.1.3 Seller's QAP, as a minimum, shall contain the requirements of DOE Order 414.1A as detailed in the Supplier Quality Assurance Program Requirements Data Sheets listed in section 2 of the MR. The very same requirements shall be passed down to any lower tier subcontractor.

9.2 Quality Level (QL) Requirements

9.2.1 Seller shall have in place a QA program meeting the requirements marked as applicable in Supplier Quality Assurance Program Requirements Data Sheet attached to the MR, and Buyer's specification 24590-WTP-3PS-G000-T0001.

9.2.2 Seller shall demonstrate that its quality program is in compliance with the procurement quality requirements listed in the Supplier Quality Assurance Program Requirements Data Sheet. The Supplier shall allow the Buyer, its agent, and DOE access to their facilities and records pertaining to this purchase order for the purpose of QA Audits and Surveillance at mutually agreed times.

9.2.3 All items shall be manufactured in accordance with the Supplier's Quality Assurance Program that has been previously evaluated and accepted by the RPP-

WTP Quality Organization. The very same requirements shall be passed down to any lower tier subcontractor.

9.2.4 Seller shall submit their QA program and work plan to Buyer for review prior to commencement of work. The plan shall include documents and procedures to implement the work and include a matrix of essential Quality Assurance elements cross referenced with the documents/procedures.

10 Configuration Management

Equipment and/or components covered by this specification are identified with Plant Item Numbers shown in the attached data sheets in section 2 of the MR. Each item shall be identified in accordance with section 8.3 of this specification.

11 Documentation and Submittals

11.1 General

11.1.1 Seller shall submit to Buyer all detailed designs, drawings, documentation, procedures, instructions, calculations, analyses, manufacturer documentation, manufacturer data, inspection reports, test reports, certifications, certificates, manuals, MSDSs, video tapes, and drawings required per this specification, the applicable codes, standards, and reference documents in section 2 of this specification, and the MR.

11.1.2 All detailed designs, drawings, assembly drawings, shop drawings, final P&IDs, MDSs, supporting calculation, supporting analyses, and all other requirements in the 60 % design stage shall be issued to the Buyer for review prior to fabrication of evaporator vessels and equipment.

11.1.3 Seller shall submit to Buyer Engineering and Quality Verification documents in the forms and quantities shown in Form G-321-E, *Engineering Document Requirements*, and Form G-321-V, *Quality Verification Document Requirements* attached to the MR, section 3.

11.1.4 Seller shall submit a report identifying any deviations and/or conflicts per section 2 of the MR to the Buyer for review.

11.1.5 Each documentation transmittal package shall have a documentation inventory sheet attached listing all documents and the number of pages each.

11.1.6 All documents submitted for review (e.g., General Arrangement, Shop Details, Calculations must contain their own unique NAME AND IDENTIFICATION NUMBER) Example:

Calculations for Item:
Document No: Calc TLP-PMP-00001-0001

11.1.7 Data sheets in section 2 of the MR shall be marked up by the Seller and submitted to the Buyer for review with the detailed design. Seller shall fill in all information that is marked as asterisk or TBD and markup actual overall dimensions for each evaporator component, equipment, and skid based on the detailed design.

11.1.8 All drawings shall be produced per the drawing practices set forth in ASME Y14.100, Engineering Drawing Practices.

11.2 Calculations

11.2.1 All calculations to be provided shall be orderly, complete, and sufficiently clear to permit verification. The body of the calculations shall include:

- A concise statement of the purpose of the calculation.
- Input data, applicable criteria, and stated assumptions.
- A list of references used, including drawings, codes, standards, and computer programs (indicate the version or issue date).
- A discussion of rationale used for design assumption basis.
- Equations used for all computations.
- Numerical calculation including identification of units used.
- A concise statement addressing the calculation results and/or recommendations.
- A table of contents for complex calculations.

11.3 As-Built Drawings

11.3.1 Progress As-Builts

During construction, the Seller shall keep an updated marked-up set of progress as-built drawings on the jobsite as an accurate record of all deviations between the work, as shown on the Buyer reviewed drawings, and work as fabricated. These drawings shall be available to the Buyer for inspection at any time during regular business hours.]

11.3.2 Final As-Builts

Seller shall furnish to Buyer final as-built drawings with AS-BUILT clearly printed on each sheet for all final work left in place. Seller shall accurately and neatly transfer all deviations from progress as-builts to final as-builts.

11.4 Dimensional Record Drawings

See 24590-WTP-3PS-PP00-T0002 for final dimensional measurement requirements. Third party validation of special dimensional inspection is not required. Seller shall furnish to Buyer dimensional record drawings for reboiler and support frame assemblies, and recirculation pumps with all their associated lifting yokes and/or lifting lugs.

11.5 Project Start

Seller shall submit drawing index and detailed schedule of engineering document submittals, material purchases, fabrication, shop test, and ready for shipment. Include bar charts or critical path method diagrams, which detail the chronological sequence of activities.

11.6 30 % Design Review

11.6.1 Provide drawings with outline dimensions, services, foundations, and mounting details of all three (3) evaporator systems. Drawings shall show external envelope, including lugs, centerline(s), location and size for electrical cable, conduit, fluid, other service connections, isometrics, and details related to foundations and mountings.

11.6.2 Provide preliminary dimension, location, and layout for all evaporator component, equipment, and skids.

11.6.3 Provide preliminary design of the demister pads replacement methodology.

11.6.4 Provide preliminary system description. Describe general system functions and basis of design. It shall include a systematic process flow diagram for system operation.

11.6.5 Provide preliminary Piping and Instrumentation Diagrams (P&IDs).

11.6.6 Provide preliminary instrument control requirements. Include system interlocks and control philosophy. Provide flow charts, schematics, logic diagrams, or function diagrams showing the equipment functional controls.

11.6.7 Provide document that describes the proposed equipment skids, including sketches of typical skids indicating skid-to-skid and skid-to-building interfaces, as well as the components included.

11.6.8 Identify all large and heavy items of equipment to ensure lifting capability during construction, maintenance, and decommissioning.

11.6.9 Provide preliminary electrical drawings, schematics, wiring drawings, and motor data sheets per Buyer's specifications 24590-WTP-3PS-MUMI-T0002 and 24590-WTP-3PS-EKP0-T0001.

11.7 60 % Design Review

11.7.1 Provide final P&IDs.

11.7.2 Provide final skid constructability study.

11.7.3 Provide final evaporator component, equipment, skid size, and layout.

11.7.4 Provide assembly drawings.

11.7.5 Provide shop detail drawings with sufficient detail to facilitate fabrication, manufacture, or installation. This includes a complete Bill of Materials (BOM), pipe spool drawings, internal piping and wiring details, cross-section details, and structural details.

11.7.6 Provide wiring diagrams including schematic diagrams, equipment internal wiring diagrams, and interconnection wiring diagrams for electrical items.

11.7.7 Submit completed Instrument and Mechanical data sheets for all instruments and equipment, utilizing Buyer's supplied instrument data sheet samples attached in section 2 of the MR as templates.

11.7.8 Provide functional test setpoints and recommended operating set points for the instrumentation and control packaged systems.

11.7.9 Provide final instrument control requirements including control loop definitions, system interlocks, alarms, and control philosophies. Control and sequencing requirements of the system and its components shall be detailed as described in section 3.5 of 24590-WTP-3PS-JQ07-T0001, *Engineering Specification for Instrumentation for Package Systems.*

11.7.10 Submit all final detailed drawings, calculations, analyses, and information necessary for evaporator vessels and equipment fabrication.

11.7.11 Submit all FMEA documentation.

11.7.12 Provide final electrical drawings, schematics, wiring drawings, motor data sheets, nameplates per Buyer's specifications 24590-WTP-3PS-MUMI-T0002 and 24590-WTP-3PS-EKP0-T0001.

11.8 90 % Design Review

11.8.1 Provide detailed written procedures, instructions, and drawings (including all lifting requirements) for evaporator system erection/installation.

11.8.2 Provide complete remote installation instructions for the utilization of the hot cell existing cranes for the needed reorientation, installation, and extraction of the reboiler.

11.8.3 Provide instrument installation details.

11.8.4 Provide list of required spares.

11.8.5 Provide startup and commissioning spares list, including all components or equipment that may be needed during startup and commissioning.

11.8.6 Provide operation manuals with detailed written instructions describing how the evaporator systems and components should be operated. Manuals shall include specific instructions, procedures, and illustrations for the following:

11.8.6.1 Safety Precautions – List personnel hazards and equipment or product safety precautions for all operating conditions.

11.8.6.2 Operator Prestart – Include requirements to set up and prepare each system for use.

11.8.6.3 Start-up, Shutdown, and Post-shutdown Procedures – Include a control sequence for each of these operations.

11.8.6.4 Normal Operations – Include control diagrams with data to explain operation and control of systems and specific equipment.

11.8.6.5 Emergency Operations – Include emergency procedures for equipment malfunctions to permit a short period of continued operation or to shut down the equipment to prevent further damage to systems and equipment. Include emergency shutdown instructions for fire, over-pressure, spills, or other foreseeable contingencies. Provide guidance on emergency operations of all utility systems including valve locations and portions of systems controlled.

11.8.6.6 Operator Service Requirements – Include instructions for services to be performed by the operator, such as lubrication, adjustments, and inspections.

11.8.6.7 Environmental Conditions – Include a list of environmental conditions (temperature, humidity, and other relevant data) which are best suited for each product or piece of equipment and describe conditions under which equipment should not be allowed to run.

11.8.6.8 Lay-up Instructions – Include step-by-step instructions for lay-up.

11.8.7 Provide maintenance manuals with detailed written instructions to disassemble, reassemble, and maintain systems or components in an operating condition. Manuals shall include specific instructions, procedures, and illustrations for the following phases of maintenance:

11.8.7.1 Preventive Maintenance - Include the following information for preventive and scheduled maintenance to minimize corrective maintenance and repair:

11.8.7.1.1 Lubrication Data – Include lubrication data, other than instructions for lubrication, in accordance with operator service requirements to be included in operation manuals.

11.8.7.1.2 Preventive Maintenance Plan and Schedule – Include manufacturer's schedule for routine preventive maintenance, inspections, testing, and adjustments required to ensure proper and economical operation and to minimize corrective maintenance and repair.

Provide manufacturer's projection of preventive maintenance frequency of work, and hours to complete the task. Provide surveillance and in-service inspection recommendations.

11.8.7.2 Corrective Maintenance – Include manufacturer's schedule for procedures and instructions for correcting problems and making repairs. Include the following information for performing corrective maintenance:

11.8.7.2.1 Troubleshooting Guide and Diagnostic Techniques – Include step-by-step procedures to promptly isolate the cause of typical malfunctions. Describe clearly why the checkout is performed and what conditions are to be sought. Identify tests or inspections and test equipment required to determine whether parts and equipment may be reused or require replacement.

11.8.7.2.2 Wiring Diagrams and Control Diagrams – Wiring diagrams and control diagrams shall be point-to-point drawings of wiring and control circuits including factor-field interfaces. Provide a complete and accurate depiction of the actual job specific wiring and control work. On diagrams, number electrical and electronic wiring and pneumatic control tubing, as well as the terminals for each type, identical to actual installation numbering.

11.8.7.2.3 Maintenance and Repair Procedures – Include instructions and list tools required to restore product or equipment to proper condition or operating standards.

11.8.7.2.4 Removal and Replacement Instructions – Include step-by-step procedures and list required tools and supplies for removal, replacement, disassembly, and assembly of components, assemblies, subassemblies, accessories, and attachments. Provide all tolerances, dimensions, settings, and adjustments required. Instructions shall include a combination of text and illustrations.

11.8.7.2.5 Recommended Spare Parts and Supply Lists – Include list of spare parts and supplies required for maintenance and repair to ensure continued service or operation without unreasonable delays. Include the cost of each item.

11.8.7.2.6 MSDSs – Include MSDSs for all chemicals and hazardous materials supplied as part of the product,

system, or equipment. In addition, include MSDSs for all chemicals and hazardous materials required to be added (lubricants, antifreeze, etc.).

11.8.7.2.7 Parts Identification – Provide identification and coverage for all parts of each component, assembly, subassembly, and accessory of the end items subject to replacement. Include special hardware requirements, such as requirement to use high-strength bolts and nuts. Identify parts by make, model, serial number, and source of supply to allow reordering without further identification. Provide clear and legible illustrations, drawings, and exploded views to enable easy identification of the items. When illustrations omit the part numbers and description, both the illustration and separate listing shall show the index, reference, or key number which will cross-reference the illustrated part to the listed part. Parts shown in the listings shall be grouped by components, assemblies, and subassemblies.

11.8.7.2.8 Other than Seller's Commercial Practice – End item manufacturer may add a cross-reference to implement component assemblies and parts requirements when implementation in manual form varies significantly from the style, format, and method of Seller's standard commercial practice.

11.8.7.2.9 Warranty Information – List and explain the various warranties and include the servicing and technical precautions prescribed by the Seller or contract documents to keep warranties in force.

11.8.7.2.10 Personnel Training Requirements – Provide information available from the Seller to use for training designated personnel to operate and maintain the equipment and systems properly.

11.8.7.3 Calibration Testing Equipment and Special Tool Information – Include information on test equipment required to perform specific tests and on special tools needed for the operation, maintenance, and repair of components.

11.8.8 Provide system, component, and instrumentation descriptions as identified below:

11.8.8.1 System Descriptions - Include comprehensive system description describing, in detail, how the overall system functions, and the basic design basis. Include component interfaces and interactions. Provide a systematic process flow diagram for system operation.

11.8.8.2 Component Descriptions – Include comprehensive component descriptions describing, in detail, how each individual process component functions and the basic design basis. Include other component interfaces and interactions. Provide a systematic process flow diagram for component operation.

11.8.8.3 Instrument Descriptions – Include a list or table describing instrument ID number, ID name, location, and basic operating function. Include separately, in systematic descriptive detail, instrument controls and logic that correspond to instrumentation and logic diagrams.

11.8.9 Provide design and operational requirements per the following:

11.8.9.1 Design requirements – Include a list or table describing the maximum design limits and conditions required to safely operate the equipment (i.e., temperatures, pressures, etc.).

11.8.9.2 Operational requirements – Include a list or table describing the normal operating ranges for equipment (i.e., temperatures, pressures, etc.).

11.8.10 Provide analysis and design reports, including analytical data (stress, electrical loading, fluid dynamics, etc.) which demonstrates that an item satisfies all specified requirements.

11.8.11 Provide seismic analysis or test data reports providing data and demonstrating suitability of materials, components, or systems in relation to the conditions imposed by the stated seismic criteria.

11.8.12 Provide thermal stress analysis or test data reports providing data and demonstrating suitability of materials, components, or systems in relation to the conditions imposed by thermal stresses.

11.8.13 Provide site storage and handling manuals including the requirements and time period for lubrication, rotation, heating, lifting, or other handling requirements to prevent damage or deterioration during storage and handling at job site. Include return shipping instructions.

11.8.14 Provide inspection and test plan including detailed descriptions of the inspections and tests planned during the receipt, manufacturing, and conformance verification activities. Include identification of witness and hold points.

11.8.15 Provide welding procedures, specifications, and supporting qualification records required for welding, hard facing, overlaying, brazing, and soldering.

11.8.16 Provide material control procedures including controlling issuance, handling, storage, and traceability of materials such as weld rod.

11.8.17 Provide PMI procedures for performing PMI testing of materials.

11.8.18 Provide repair procedures including controlling material removal and replacement by welding, brazing, etc., subsequent thermal treatments, and final acceptance inspection.

11.8.19 Provide pressure testing procedures including hydro, air, leak, separation, or vacuum test procedures for performing hydrostatic or pneumatic structural integrity and leakage tests.

11.8.20 Provide inspection procedures for the purpose of determining that specified requirements (i.e., dimensions, properties, performance results, etc.) are met.

11.8.21 Provide radiographic testing procedures for identifying the presence and certain characteristics of discontinuities and inclusions in materials by x-ray or gamma ray exposure of photographic film.

11.8.22 Provide liquid penetrant testing procedures for detection of surface discontinuities in materials by application of a penetrating liquid in conjunction with suitable developing techniques.

11.8.23 Provide functional shop test procedures to demonstrate that design function and operational parameters are met (e.g., pump performance data, valve stroking, load, temperature rise, calibration, environment, etc.).

11.8.24 Provide integrated acceptance test requirements document per engineering specifications to demonstrate design function and operational parameters for the complete assembled evaporator systems.

11.8.25 Provide electrical test procedures to demonstrate that design function and operational parameters are met (e.g., impulse, overload, continuity, voltage, temperature rise, calibration, saturation loss, etc.).

11.8.26 Provide shipping preparation procedures for cleaning, packaging, and handling.

11.9 Final Design Review

Provide final design report including all design documents, manuals, and drawings that are specified in this specification. All procedures and instructions shall be completed and submitted to the Buyer a minimum of eight (8) weeks prior to evaporator components, equipment, and skid shipment.

APPENDIX A

WASTE FEED EVAPORATOR STREAM DATA

Stream Description	Evaporator Feed	Evaporator Concentrate	Process Condensate
Specific Gravity	1.050882E+00	1.197295E+00	1.000072E+00
pH	1.227066E+01	1.305375E+01	9.325531E+00
Total Volume (gpm)	1.962454E+01	3.234591E+00	1.710009E+01
Total Mass (lb/hr)	1.030370E+04	1.934908E+03	8.544156E+03
Na Molarity	8.231085E-01	5.000000E+00	3.116202E-05
Activity (Ci/gallon)			
129-I	1.070549E-07	6.456333E-07	7.335298E-10
134-Cs	6.794152E-06	4.120906E-05	2.202542E-09
137-Cs	1.531654E-01	9.292679E-01	1.866905E-09
14-C	4.343208E-06	2.632459E-05	4.923495E-09
126-Sn	3.687065E-07	2.235285E-06	3.195409E-10
233-U	7.147865E-07	4.333113E-06	6.729994E-10
235-U	5.308471E-09	3.218466E-08	4.216552E-12
152-Eu	1.787821E-06	1.083834E-05	1.612622E-09
154-Eu	1.047067E-04	6.347777E-04	9.210747E-08
155-Eu	2.783818E-05	1.688275E-04	1.307200E-08
237-Np	1.743947E-07	1.057294E-06	1.462592E-10
238-Pu	1.558783E-06	9.457271E-06	1.600678E-13
239-Pu	2.427044E-05	1.472509E-04	1.683651E-12
240-Pu	6.791157E-06	4.120253E-05	7.334047E-13
241-Am	1.539731E-04	9.341677E-04	4.075735E-11
243-Am	5.791005E-05	3.513452E-04	7.425120E-12
242-Cm	2.927004E-07	1.774511E-06	2.511805E-10
241-Pu	5.791005E-05	3.513452E-04	7.425120E-12
243-Cm	4.125221E-08	2.501032E-07	3.356803E-11
244-Cm	8.401929E-07	5.093914E-06	6.825013E-10
3-H	1.025165E-05	2.637668E-05	6.775766E-06
60-Co	1.897588E-06	1.150925E-05	6.773841E-10
90-Sr	2.251101E-02	1.365762E-01	1.437153E-09
99-Tc	5.315124E-04	3.223320E-03	2.669563E-07
125-Sb	6.485595E-05	3.931850E-04	1.619373E-07
Specific Mass (wt%)			
Ag+	0.0000851	0.0004528	0.0000000
Al+3	0.1407107	0.7486167	0.0001564
B+3	0.0002618	0.0013935	0.0000002
Ba+2	0.0001225	0.0006518	0.0000001
Bi+3	0.0001670	0.0008883	0.0000002
Ca+2	0.0023604	0.0125596	0.0000022
Cd+2	0.0006340	0.0033758	0.0000000
Cl-	0.0256441	0.1362996	0.0000587
CO3-2	0.3966942	2.1103727	0.0004730
Cr(TOTAL)	0.0140436	0.0747823	0.0000005
Cs+	0.0001128	0.0006007	0.0000000

F-	0.0209444	0.1115277	0.0000010
Fe+3	0.0111118	0.0591522	0.0000045
Hg+2	0.0001399	0.0007446	0.0000001
K+	0.0677068	0.3604479	0.0000230
La+3	0.0004065	0.0021647	0.0000000
Li+	0.0002899	0.0015438	0.0000000
Mg+2	0.0002586	0.0013766	0.0000001
Mn+4	0.0012678	0.0067511	0.0000001
Mo+6	0.0002105	0.0011200	0.0000002
Na+	1.8061286	9.6176128	0.0000717
NH3	0.0163755	0.0051900	0.0185725
Ni+2	0.0023278	0.0023372	0.0022779
NO2-	0.4747226	2.5269331	0.0002360
NO3-	3.5169979	18.6961248	0.0073514
OH(BOUND)	0.1876967	0.9986652	0.0001926
OH-	0.0301822	0.1605662	0.0000360
Pb+2	0.0007719	0.0040181	0.0000209
Phosphor containing components	0.0646907	0.3441493	0.0000768
Se+6	0.0010836	0.0057700	0.0000001
Si+4	0.0121852	0.0648277	0.0000137
SO4-2	0.0669264	0.3561423	0.0000570
Sr+2	0.0000854	0.0004544	0.0000001
Ti+4	0.0000312	0.0001660	0.0000000
TOC	0.0494322	0.2459911	0.0039049
U(TOTAL)	0.0002514	0.0013377	0.0000003
Zn+2	0.0001314	0.0006996	0.0000000
Zr+4	0.0115379	0.0613963	0.0000102
H2O	92.3882691	63.2687429	99.9664571
H+	0.0000000	0.0000000	0.0000000
CO2	0.0000000	0.0000000	0.0000000
Total Dissolved Solids (Na Excluded) (wt%)	5.0601243	26.7981844	0.0334712
Total Suspended Solids (wt%)	0.7454780	0.3154599	0.0000000

Note: Table extracted from 24590-PTF-M4C-V11T-00006 REV. B

APPENDIX B

TREATED LAW EVAPORATOR STREAM DATA

Stream Description	Feed Treated LAW	Feed Neutralized Effluent	Concentrated LAW	Condensate from LAW Evap
Specific Gravity	1.201279E+00	9.960371E-01	1.354830E+00	1.000211E+00
pH	1.400000E+01	1.199980E+01	1.400000E+01	1.108047E+01
Total Volume (gpm)	1.398842E+01	9.800359E+00	8.316158E+00	1.574299E+01
Total Mass (lb/hr)	8.395616E+03	4.877051E+03	5.629209E+03	7.867172E+03
Na Molarity	4.654928E+00	9.564147E-02	8.001080E+00	1.384081E-04
Activity (Ci/gallon)				
129-I	4.749081E-07	0.000000E+00	7.940393E-07	2.531875E-09
134-Cs	1.575297E-08	4.663790E-10	2.703969E-08	4.038980E-12
137-Cs	3.359384E-04	9.978015E-06	5.768332E-04	3.256697E-12
14-C	3.582432E-05	0.000000E+00	6.019971E-05	3.147259E-08
126-Sn	1.430030E-06	0.000000E+00	2.403044E-06	1.256318E-09
233-U	8.109593E-07	0.000000E+00	1.362748E-06	7.124486E-10
235-U	7.044819E-09	0.000000E+00	1.183822E-08	6.189054E-12
152-Eu	1.012468E-05	0.000000E+00	1.701366E-05	8.894794E-09
154-Eu	1.453164E-04	0.000000E+00	2.441918E-04	1.276642E-07
155-Eu	3.750157E-05	0.000000E+00	6.301818E-05	3.294609E-08
237-Np	6.467932E-07	0.000000E+00	1.086881E-06	5.682244E-10
238-Pu	1.128371E-06	0.000000E+00	1.898007E-06	2.681847E-13
239-Pu	2.250086E-05	0.000000E+00	3.784818E-05	5.347876E-12
240-Pu	6.141525E-06	0.000000E+00	1.033052E-05	1.459683E-12
241-Am	1.046161E-04	0.000000E+00	1.759723E-04	6.571346E-11
243-Am	4.604254E-05	0.000000E+00	7.744709E-05	1.094313E-11
242-Cm	3.178432E-07	0.000000E+00	5.341082E-07	2.792334E-10
241-Pu	4.604254E-05	0.000000E+00	7.744709E-05	1.094313E-11
243-Cm	4.969903E-08	0.000000E+00	8.351496E-08	4.366187E-11
244-Cm	9.701220E-07	0.000000E+00	1.630207E-06	8.522771E-10
3-H	4.475971E-05	0.000000E+00	3.012124E-05	2.385981E-05
60-Co	5.350007E-06	0.000000E+00	8.990228E-06	4.700118E-09
90-Sr	1.768254E-02	0.000000E+00	2.974328E-02	6.760816E-08
99-Tc	1.119640E-04	0.000000E+00	1.881459E-04	9.836324E-08
125-Sb	2.554858E-04	0.000000E+00	4.293221E-04	2.244509E-07
Specific Mass (wt%)				
Ag+	0.0001789	0.0000000	0.0002666	0.0000002
Al+3	0.8781368	0.0000000	1.3083917	0.0009266
B+3	0.0011040	0.0000000	0.0016449	0.0000012
Ba+2	0.0003972	0.0000000	0.0005919	0.0000004
Bi+3	0.0009166	0.0000000	0.0013656	0.0000010
Ca+2	0.0036401	0.0000000	0.0054235	0.0000039
Cd+2	0.0001758	0.0000000	0.0002620	0.0000002
Cl-	0.1927241	0.3081970	0.5533995	0.0007536
CO3-2	1.8709695	0.0000000	2.7876764	0.0019741
Cr(TOTAL)	0.0436851	0.0000000	0.0651518	0.0000013

Cs+	0.0000002	0.0000000	0.0000003	0.0000000
F-	0.1369480	0.0311205	0.2312023	0.0000068
Fe+3	0.0051922	0.0000000	0.0077362	0.0000055
Hg+2	0.0002119	0.0017125	0.0002775	0.0000002
K+	0.4371071	0.0000000	0.6517338	0.0001319
La+3	0.0000717	0.0000000	0.0001068	0.0000001
Li+	0.0001031	0.0000000	0.0001537	0.0000001
Mg+2	0.0007039	0.0000000	0.0010487	0.0000007
Mn+4	0.0003630	0.0000000	0.0005408	0.0000004
Mo+6	0.0014914	0.0000000	0.0022221	0.0000016
Na+	8.9124915	0.2205096	13.4830308	0.0003183
NH3	0.0556091	0.0000000	0.0046946	0.0559853
Ni+2	0.0010718	0.0000000	0.0000905	0.0010791
NO2-	3.6214624	0.0000000	5.3989608	0.0015931
NO3-	8.2610982	0.1691503	12.4458561	0.0154626
OH(BOUND)	1.2709676	0.0000000	1.8936954	0.0013410
OH-	1.9297357	0.0170413	2.8899856	0.0020466
Pb+2	0.0022422	0.0000000	0.0032374	0.0000764
Phosphor containing components	0.2305136	0.0000000	0.3434569	0.0002432
Se+6	0.0007265	0.0000000	0.0010825	0.0000008
Si+4	0.0190601	0.0000000	0.0283989	0.0000201
SO4-2	0.4242482	0.0000000	0.6322928	0.0003199
Sr+2	0.0002059	0.0000000	0.0003067	0.0000002
Ti+4	0.0000875	0.0000000	0.0001303	0.0000001
TOC	0.1782369	0.0000016	0.2481087	0.0126807
U(TOTAL)	0.0014123	0.0000000	0.0021042	0.0000015
Zn+2	0.0001606	0.0000000	0.0002393	0.0000002
Zr+4	0.0092074	0.0000000	0.0137187	0.0000097
H2O	71.5070307	98.7871894	55.3633120	99.9050111
H+	0.0000000	0.0000000	0.0000000	0.0000000
CO2	0.0000000	0.0000000	0.0000000	0.0000000
Total Dissolved Solids (Na Excluded) (wt%)	19.5804777	0.5272233	29.5260185	0.0946707
Total Suspended Solids (wt%)	0.0000000	0.4650777	1.6276387	0.0000000

Note: Table extracted from 24590-PTF-M4C-V11T-00006 REV. B

APPENDIX C

Predicted Maximum Radionuclide

Stream Number	Waste Feed Evaporators			Treated LAW Evaporator		
Stream Description	FEP Feed	FEP Concentrate	FEP Overhead	TLP Feed	TLP Concentrate	TLP overhead
Specific Gravity	1.108297E+00	1.291591E+00	1.000111E+00	1.105304E+00	1.278000E+00	1.000163E+00
pH	1.312459E+01	1.389913E+01	1.017151E+01	1.321351E+01	1.386570E+01	1.029492E+01
Total Volume (gpm)	1.921589E+01	3.462492E+00	2.248903E+00	1.074593E+01	2.391253E+00	1.179073E+00
Total Mass (lb/hr)	1.066579E+04	2.239702E+03	8.426084E+03	5.948428E+03	1.530498E+03	4.417929E+03
Na Molarity	1.678973E+00	1.000000E+01	6.235205E-05	2.217504E+00	9.964802E+00	8.915611E-05
Activity (Ci/gallon)						
129-I	1.118972E-06	5.133318E-06	1.657679E-06	6.388461E-07	2.124451E-06	1.513816E-06
134-Cs	1.129467E-04	6.250516E-04	2.728177E-06	2.084563E-08	9.341234E-08	5.370692E-10
137-Cs	4.359059E+00	2.419159E+01	2.232506E-06	4.525083E-04	2.033504E-03	4.407797E-10
14-C	1.530790E-05	8.491637E-05	5.895986E-08	8.056168E-06	3.616737E-05	7.268873E-08
126-Sn	1.923017E-04	1.067222E-03	1.486077E-10	2.043400E-08	9.173655E-08	1.841322E-10
233-U	1.150416E-06	6.384484E-06	1.248818E-11	1.717230E-09	7.709344E-09	1.547408E-11
235-U	6.946466E-07	3.853045E-06	3.162332E-09	4.348219E-07	1.952093E-06	3.918211E-09
152-Eu	6.188336E-04	3.434357E-03	6.581440E-10	9.049626E-08	4.062746E-07	8.154683E-10
154-Eu	6.562753E-02	3.642143E-01	8.345943E-07	1.147543E-04	5.151790E-04	1.034060E-06
155-Eu	3.737761E-02	2.074354E-01	2.034016E-07	2.796783E-05	1.255590E-04	2.520201E-07
237-Np	9.537993E-05	5.293324E-04	2.536272E-10	3.487470E-08	1.565667E-07	3.142584E-10
238-Pu	4.520421E-04	2.508710E-03	2.573295E-11	1.309172E-06	5.883206E-06	3.191544E-11
239-Pu	3.985830E-03	2.212027E-02	5.228669E-11	2.660106E-06	1.195409E-05	6.484898E-11
240-Pu	2.153818E-04	1.195310E-03	4.564062E-11	2.321981E-06	1.043461E-05	5.660605E-11
241-Am	4.833846E-02	2.682652E-01	3.172753E-09	6.111128E-05	2.746230E-04	3.937305E-09
241-Pu	2.838034E-02	1.575032E-01	8.472452E-10	4.310391E-05	1.937020E-04	1.050802E-09
242-Cm	4.706917E-15	2.611634E-14	8.863463E-18	1.212658E-15	5.444115E-15	1.092735E-17
243-Am	1.646951E-06	9.139638E-06	7.551321E-10	1.033137E-07	4.638171E-07	9.309668E-10
243-Cm	1.726031E-04	9.578996E-04	7.809701E-10	1.073837E-07	4.820890E-07	9.676419E-10
244-Cm	3.700041E-03	2.053421E-02	1.637305E-08	2.251301E-06	1.010701E-05	2.028663E-08
3-H	2.663313E-04	8.683912E-04	9.386773E-04	1.255884E-04	2.257503E-04	6.867589E-04
60-Co	1.287961E-02	7.147826E-02	6.882351E-08	9.462625E-06	4.248158E-05	8.526838E-08
90-Sr	1.320134E+01	7.326381E+01	2.292527E-06	7.286412E-03	3.274264E-02	2.857525E-06
99-Tc	3.006068E-02	1.668241E-01	6.876193E-06	2.174950E-04	9.764235E-04	1.959863E-06
125-Sb	4.141097E-02	2.298192E-01	6.367954E-09	8.755757E-07	3.930816E-06	7.889875E-09
Specific Mass (wt%)						
Ag+	0.000000	0.000000	0.000000	0.000000	0.000000	0.000000
Al+3	0.635506	3.025530	0.000224	0.266638	1.035288	0.000355
B+3	0.000135	0.000642	0.000000	0.080263	0.311642	0.000107
Ba+2	0.000074	0.000352	0.000000	0.000044	0.000172	0.000000
Bi+3	0.000068	0.000325	0.000000	0.000001	0.000004	0.000000
Ca+2	0.024647	0.117371	0.000000	0.050340	0.195456	0.000068
Cd+2	0.000067	0.000320	0.000000	0.000159	0.000619	0.000000
Cl-	0.003163	0.015034	0.000008	0.005424	0.021042	0.000014

CO3-2	1.242770	5.913663	0.001220	1.128055	4.379954	0.001504
Cr(TOTAL)	0.035967	0.171277	0.000001	0.030544	0.118710	0.000001
Cs+	0.001630	0.007759	0.000001	0.000000	0.000001	0.000000
F-	0.044968	0.214134	0.000002	0.067028	0.260499	0.000004
Fe+3	0.482484	2.297630	0.000007	0.019977	0.077566	0.000027
Hg+2	0.000456	0.002170	0.000000	0.000000	0.000000	0.000000
K+	1.096415	5.219836	0.000385	1.327461	5.157862	0.000500
La+3	0.010410	0.049572	0.000000	0.000119	0.000464	0.000000
Li+	0.000448	0.002130	0.000001	0.018270	0.070937	0.000024
Mg+2	0.000003	0.000016	0.000000	0.009913	0.038490	0.000013
Mn+4	0.047130	0.224438	0.000000	0.000360	0.001397	0.000000
Mo+6	0.000000	0.000000	0.000000	0.000000	0.000000	0.000000
Na+	3.931713	18.722852	0.000143	4.614350	17.933525	0.000205
NH3	0.011529	0.032152	0.006048	0.000354	0.000000	0.000448
Ni+2	0.021794	0.101921	0.000495	0.000086	0.000020	0.000108
NO2-	1.354414	6.447289	0.000698	1.559829	6.059939	0.000861
NO3-	4.344527	20.654158	0.009333	6.329382	24.557934	0.014488
OH(BOUND)	1.748240	8.324258	0.000297	0.274711	1.066633	0.000366
OH-	0.201424	0.958261	0.000252	0.251582	0.976831	0.000335
Pb+2	0.011534	0.054916	0.000003	0.000091	0.000342	0.000004
Phosphor components	0.040853	0.194443	0.000028	0.026038	0.101099	0.000035
Se+6	0.001869	0.008898	0.000001	0.001729	0.006714	0.000002
Si+4	0.074861	0.356440	0.000016	0.083117	0.322721	0.000111
SO4-2	0.494661	2.353991	0.000441	0.869199	3.375827	0.000831
Sr+2	0.001500	0.007143	0.000000	0.000039	0.000151	0.000000
Ti+4	0.000406	0.001934	0.000000	0.000638	0.002479	0.000001
TOC	2.874880	13.677296	0.003535	3.269664	12.695283	0.004358
U(TOTAL)	0.121728	0.579682	0.000001	0.000868	0.003370	0.000001
Zn+2	0.000235	0.001118	0.000000	0.030679	0.119120	0.000041
Zr+4	0.266983	1.271405	0.000001	0.008245	0.032015	0.000011
H2O	80.763931	8.482255	99.976817	79.669593	21.055761	99.975139
H+	0.000000	0.000000	0.000000	0.000000	0.000000	0.000000
CO2	0.000000	0.000000	0.000000	0.000000	0.000000	0.000000
Total Dissolved Solids (Na Excluded) (wt%)	11.304045	53.744832	0.023039	15.716052	61.010697	0.024656
Total Suspended Solids (wt%)	4.000310	19.050061	0.000000	0.000004	0.000016	0.000000

Note: Information contained in this table is from 24590-PTF-M4C-V11T-00008 REV. A. which is the best available data at time of release. Table will be updated to current information when it becomes available in the next revision.

APPENDIX D

EVAPORATOR PROCESS DATA

BECHTEL

PROCESS DATA SHEET: Mechanical Pump

PLANT ITEM No.
24590-PTF-FEP-PMP-00007A

Project:	RPP-WTP		System:		FEP			
Project No:	24590		Description:		Waste Feed Evaporator Feed Pump			
Site:	Hanford		Supporting Calcs No.		24590-PTF-MEC-FEP-00001, Rev. A			
Building No.:	10		Associated Drawings:		24590-PTF-M5-V17T-00004001, Rev. B			
PROCESS DATA	Units	Mode 1 (Note 1)	Mode 2 (Note2)	Mode 3 (Note 3)	Mode 4	ETC		
Capacity Normal (Note 4)	gpm	50	39	36				
Capacity Rated	gpm	60	N/A	N/A				
Minimum Pumping Temperature	°F	59	59	59				
Normal Pumping Temperature	°F	77	77	77				
Maximum Pumping Temperature	°F	122	122	122				
Density at Normal Pumping Temperature (Note 7)	lb/ft^3	75.9	67.6	68.9				
Sp Gravity at Normal Pumping Temperature (Note 7)		1.23	1.08	1.10				
Viscosity at Normal Pumping Temperature	cP	11.8	11.8	11.8				
Vapor Press at Normal Pumping Temp	psia	0.43	0.44	0.44				
Origin Pressure	psia	14.61	14.61	14.61				
Delivery Pressure	psia	(Note 5)	(Note 5)	(Note 5)				
FLUID COMPOSITION								
Content Code (e.g., Type/Name of Liquid)								
Solids Content	% wt/wt	4	7	2				
Solids Size Range	microns	(Note 6)	(Note 6)	(Note 6)				
Solids Characteristics		(Note 6)	(Note 6)	(Note 6)				

Notes:
1. Mode 1 represents Envelope A waste feed and recycles required to meet production rate of 60 Mt/d LAW glass.
2. Mode 1 represents Envelope B waste feed and recycles required to meet production rate of 60 Mt/d LAW glass.
3. Mode 1 represents Envelope C waste feed and recycles required to meet production rate of 30 Mt/d LAW glass.
4. Minimum flowrate is 20 gpm for Envelope A, 25 gpm for Envelope B, and 23 gpm for Envelope C.
5. Delivery pressure to be determined by waste feed evaporator vendor.
6. Solids size range and characteristics to be determined by R&T.
7. Density and Specific Gravity based on pretreated AW-101 of same molarity. Does not include weight percent solids.

BECHTEL

PROCESS DATA SHEET: Mechanical Pump

PLANT ITEM No.
24590-PTF-FEP-PMP-00007B

Project:	RPP-WTP		System:		FEP			
Project No:	24590		Description:		Waste Feed Evaporator Feed Pump			
Site:	Hanford		Supporting Calcs No.		24590-PTF-MEC-FEP-00001, Rev. A			
Building No.:	10		Associated Drawings:		24590-PTF-M5-V17T-00004001, Rev. B			
PROCESS DATA	Units	Mode 1 (Note 1)	Mode 2 (Note2)	Mode 3 (Note 3)	Mode 4	ETC.		
Capacity Normal (Note 4)	gpm	50	39	36				
Capacity Rated	gpm	60	N/A	N/A				
Minimum Pumping Temperature	°F	59	59	59				
Normal Pumping Temperature	°F	77	77	77				
Maximum Pumping Temperature	°F	122	122	122				
Density at Normal Pumping Temperature (Note 7)	lb/ft^3	75.9	67.6	68.9				
Sp Gravity at Normal Pumping Temperature (Note 7)		1.23	1.08	1.10				
Viscosity at Normal Pumping Temperature	cP	11.8	11.8	11.8				
Vapor Press at Normal Pumping Temp	psia	0.43	0.44	0.44				
Origin Pressure	psia	14.61	14.61	14.61				
Delivery Pressure	psia	(Note 5)	(Note 5)	(Note 5)				
FLUID COMPOSITION								
Content Code (e.g., Type/Name of Liquid)								
Solids Content	% wt/wt	4	7	2				
Solids Size Range	microns	(Note 6)	(Note 6)	(Note 6)				
Solids Characteristics		(Note 6)	(Note 6)	(Note 6)				

Notes:
1. Mode 1 represents Envelope A waste feed and recycles required to meet production rate of 60 Mt/d LAW glass.
2. Mode 1 represents Envelope B waste feed and recycles required to meet production rate of 60 Mt/d LAW glass.
3. Mode 1 represents Envelope C waste feed and recycles required to meet production rate of 30 Mt/d LAW glass.
4. Minimum flowrate is 20 gpm for Envelope A, 25 gpm for Envelope B, and 23 gpm for Envelope C.
5. Delivery pressure to be determined by waste feed evaporator vendor.
6. Solids size range and characteristics to be determined by R&T.
7. Density and Specific Gravity pretreated AW-101 of same molarity. Does not include weight percent solids.

PROCESS DATA SHEET: Mechanical Pump

PLANT ITEM No.
24590-PTF-FEP-PMP-00008A

Project:	RPP-WTP	System:	FEP
Project No:	24590	Description:	Waste Feed Evaporator Concentrate Pump
Site:	DOE Hanford	Supporting Calcs No.	24590-PTF-MEC-FEP-00001, Rev. A
Building No.:	10	Associated Drawings:	24590-PTF-M5-V17T-00004002, Rev. B

PROCESS DATA	Units	Mode 1 (Note 1)	Mode 2 (Note2)	Mode 3(Note 3)	Mode 4	ETC		
Capacity Normal (Note 4)	gpm	28	14	14				
Capacity Rated	gpm	34	N/A	N/A				
Minimum Pumping Temperature	°F	59	59	59				
Normal Pumping Temperature	°F	122	122	122				
Maximum Pumping Temperature	°F	122	122	122				
Density at Normal Pumping Temperature (Note 7)	lb/ft^3	75.9	75.9	76.6				
Sp Gravity at Normal Pumping Temperature (Note 7)		1.23	1.23	1.25				
Viscosity at Normal Pumping Temperature	cP	5.5	5.5	5.5				
Vapor Press at Normal Pumping Temp	psia	1.3	1.3	1.2				
Origin Pressure	psia	Note 5	Note 5	Note 5				
Delivery Pressure	psia	14.6	14.6	14.6				
FLUID COMPOSITION								
Content Code (e.g., Type/Name of Liquid)								
Solids Content	% wt/wt	5	15	3				
Solids Size Range	microns	Note 6	Note 6	Note 6				
Solids Characteristics		Note 6	Note 6	Note 6				

Notes:
1. Mode 1 represents Envelope A concentrate required to meet production rate of 60 Mt/d LAW glass.
2. Mode 2 represents Envelope B concentrate required to meet production rate of 60 Mt/d LAW glass.
3. Mode 3 represents Envelope C concentrate required to meet production rate of 30 Mt/d LAW glass.
4. Minimum flowrate is 12 gpm for Envelope A, 4 gpm for Envelope B, and 3 gpm for Envelope C.
5. Origin pressure to be determined by treated LAW evaporator vendor.
6. Solids size range and characteristics to be determined by R&T.
7. Density and Specific Gravity based on pretreated AW-101 solutions of same molarity. Does not include weight percent solids.

BECHTEL

PROCESS DATA SHEET: Mechanical Pump

PLANT ITEM No.
24590-PTF-FEP-PMP-00008B

Project:	RPP-WTP		System:		FEP			
Project No:	24590		Description:		Waste Feed Evaporator Concentrate Pump			
Site:	Hanford		Supporting Calcs No.		24590-PTF-MEC-FEP-00001, Rev. A			
Building No.:	10		Associated Drawings:		24590-PTF-M5-V17T-00004002, Rev. B			
PROCESS DATA	Units	Mode 1 (Note 1)	Mode 2 (Note2)	Mode 3(Note 3)	Mode 4	ETC.		
Capacity Normal (Note 4)	gpm	28	14	14				
Capacity Rated	gpm	34	N/A	N/A				
Minimum Pumping Temperature	°F	59	59	59				
Normal Pumping Temperature	°F	122	122	122				
Maximum Pumping Temperature	°F	122	122	122				
Density at Normal Pumping Temperature (Note 7)	lb/ft^3	75.9	75.9	76.6				
Sp Gravity at Normal Pumping Temperature (Note 7)		1.23	1.23	1.25				
Viscosity at Normal Pumping Temperature	cP	5.5	5.5	5.5				
Vapor Press at Normal Pumping Temp	psia	1.3	1.3	1.2				
Origin Pressure	psia	Note 5	Note 5	Note 5				
Delivery Pressure	psia	14.6	14.6	14.6				
FLUID COMPOSITION								
Content Code (e.g. Type/Name of Liquid)								
Solids Content	% wt/wt	5	15	3				
Solids Size Range	microns	Note 6	Note 6	Note 6				
Solids Characteristics		Note 6	Note 6	Note 6				

Notes:
1. Mode 1 represents Envelope A concentrate required to meet production rate of 60 Mt/d LAW glass.
2. Mode 2 represents Envelope B concentrate required to meet production rate of 60 Mt/d LAW glass.
3. Mode 3 represents Envelope C concentrate required to meet production rate of 30 Mt/d LAW glass.
4. Minimum flowrate is 12 gpm for Envelope A, 4 gpm for Envelope B, and 3 gpm for Envelope C.
5. Origin pressure to be determined by treated LAW evaporator vendor.
6. Solids size range and characteristics to be determined by R&T.
7. Density and Specific Gravity based on pretreated AW-101 solutions of same molarity. Does not include weight percent solids.

PROCESS DATA SHEET: Evaporator

PLANT ITEM No.
24590-PTF-FEP-EVAP-00001A

Project:	RPP-WTP	System:	FEP
Project No:	24590	Description:	Waste Feed Evaporator
Site:	Hanford	Supporting Calcs No.	24590-PTF-MEC-FEP-00001, Rev. B
Building No.:	10	Associated Drawings:	24590-PTF-M5-V17T-00004002, Rev. 0

UTILITIES DATA	Units	Cooling Water	Low Pressure Steam	High Pressure Steam	Instrument Air
		Note 1	Note 2	Note 2	
Temperature	°F	83	286	343	60
Pressure	psig	65	40	109	100

PROCESS DATA	Units	Envelope A					Evaporator Bypass (Envelop A)		
		Feed		Concentrate	Overheads	Condensate	Feed (Recycles)		
		Minimum Na	Maximum Na				Minimum Na (Note 14)	Maximum Na (Note 14)	Concentrate (Note 14)
					Notes 5,9				
Liquid Flow (Note 4)	lb_m/hr	11,000	27,000	7,000 (Note 7)	N/A	14,900 (Note 8)	14,200	16,300 (Note 13)	14,200
Vapor Flow	lb_m/hr	N/A	N/A	N/A	14,900	N/A	N/A	N/A	N/A
Noncondensables Flow	lb_m/hr	N/A	N/A	N/A	42.7	N/A	N/A	N/A	N/A
Temperature (Note 6)	°F	77	77	122	111	111	77	77	122
Na Molarity		1.4	4	5	N/A	0	0.2	1	5
Density	lb_m/ft^3	67.8	75.9	74.0	0.0039	61.9	63.4	66.6	75.9
Specific Gravity		1.09	1.22	1.23	N/A	1	1.02	1.07	1.23
Viscosity	Cp	11.8	11.8	5.5	0.01	0.7	11.8	11.8	5.5
Specific Heat	BTU/lb_m°F	0.93	0.88	0.68	0.45	1	0.99	0.94	0.68
Thermal Conductivity	BTU/hr ft °F	0.36	0.39	0.39	0.01	0.37	0.353	0.369	0.39

		Envelope B			Envelope C		
		Feed		Concentrate	Feed		Concentrate
		Minimum Na	Maximum Na		Minimum Na	Maximum Na	
	Units						
Liquid Flow (Note 4)	lb_m/hr	13,000	21,100	8,490 (Note10)	11,900	19,800	8780 (Note 11)
Vapor Flow	lb_m/hr	N/A	N/A	N/A	N/A	N/A	N/A
Non-Condensables Flow	lb_m/hr	N/A	N/A	N/A	N/A	N/A	N/A
Temperature (Note 6).	°F	77	77	122	77	77	122
Na Molarity		0.78	1.81	5	0.77	2.30	6
Density (Note 12)	lbm /ft3	64.9	67.6	74.0	64.9	68.9	76.6
Specific Gravity (Note 12)		1.04	1.08	1.21	1.04	1.10	1.25
Viscosity	cP	11.8	11.8	5.5	11.8	11.8	5.5
Specific Heat	BTU/lbm°F	0.94	0.91	0.68	0.94	0.91	0.68
Thermal Conductivity	BTU/hr ft °F	0.377	0.385	0.39	0.377	0.385	0.39

Notes:
1. Maximum temperature and pressure of cooling water supply.
2. Temperature and pressure of steam supply.
3. Delete.
4. Evaporator to require 50% turndown capability.
5. Evaporator overheads prior to condensate removal.
6. Vacuum system to enable concentration of feed at reduced temperature
7. Maximum transfer rate. Minimum Transfer rate is 7,300 lbs/hr
8. Maximum evaporator overhead condensate production capacity. Envelope A average conditions require 11,800 lbs/hr.
9. Maximum overhead vapor and noncondensable flow. Average vapor flow is 11,800 lbs/hr. Noncondensable flow also applies to average conditions.
10. Maximum transfer rate. Minimum transfer rate is 2430 lbs/hr
11. Maximum transfer rate. Minimum transfer rate is 1880 lbs/hr.
12. Density and Specific Gravity based on sodium hydroxide solutions of same molarity. Does not include weight percent solids.
13. Maximum transfer rate. Minimum transfer rate is 7,300 lbs/hr.
14. Based on evaporator semibatch operation.

PROCESS DATA SHEET: Evaporator

PLANT ITEM No.
24590-PTF-FEP-EVAP-00001B

Project:	RPP-WTP	System:	FEP
Project No:	24590	Description:	Waste Feed Evaporator
Site:	Hanford	Supporting Calcs No.	24590-PTF-MEC-FEP-00001, Rev. B
Building No.:	10	Associated Drawings:	24590-PTF-M5-V17T-00004002, Rev. 0

UTILITIES DATA	Units	Cooling Water	Low Pressure Steam	High Pressure Steam	Instrument Air
		Note 1	Note 2	Note 2	
Temperature	°F	83	286	343	60
Pressure	psig	65	40	109	100

PROCESS DATA	Units	Envelope A					Evaporator Bypass (Envelop A)		
		Feed		Concentrate	Overheads	Condensate	Feed (Recycles)		
		Minimum Na	Maximum Na				Minimum Na (Note 14)	Maximum Na (Note 14)	Concentrate (Note 14)
					Notes 5,9				
Liquid Flow (Note 4)	lb_m/hr	11,000	27,000	7,000 (Note 7)	N/A	14,900 (Note 8)	14,200	16,300 (Note 13)	14,200
Vapor Flow	lb_m/hr	N/A	N/A	N/A	14,900	N/A	N/A	N/A	N/A
Noncondensables Flow	lb_m/hr	N/A	N/A	N/A	42.7	N/A	N/A	N/A	N/A
Temperature (Note 6)	°F	77	77	122	111	111	77	77	122
Na Molarity		1.4	4	5	N/A	0	0.2	1	5
Density	lb_m/ft^3	67.8	75.9	74.0	0.0039	61.9	63.4	66.6	75.9
Specific Gravity		1.09	1.22	1.23	N/A	1	1.02	1.07	1.23
Viscosity	Cp	11.8	11.8	5.5	0.01	0.7	11.8	11.8	5.5
Specific Heat	$BTU/lb_m°F$	0.93	0.88	0.68	0.45	1	0.99	0.94	0.68
Thermal Conductivity	BTU/hr ft °F	0.36	0.39	0.39	0.01	0.37	0.353	0.369	0.39

	Units	Envelope B			Envelope C		
		Feed		Concentrate	Feed		Concentrate
		Minimum Na	Maximum Na		Minimum Na	Maximum Na	
Liquid Flow (Note 4)	lb_m/hr	13,000	21,100	8,490 (Note10)	11,900	19,800	8780 (Note 11)
Vapor Flow	lb_m/hr	N/A	N/A	N/A	N/A	N/A	N/A
Non-Condensables Flow	lb_m/hr	N/A	N/A	N/A	N/A	N/A	N/A
Temperature (Note 6)	°F	77	77	122	77	77	122
Na Molarity		0.78	1.81	5	0.77	2.30	6
Density (Note 12)	lbm /ft3	64.9	67.6	74.0	64.9	68.8	76.6
Specific Gravity (Note 12)		1.04	1.08	1.21	1.04	1.10	1.25
Viscosity	cP	11.8	11.8	5.5	11.8	11.8	5.5
Specific Heat	BTU/lbm°F	0.94	0.91	0.68	0.94	0.91	0.68
Thermal Conductivity	BTU/hr ft °F	0.377	0.385	0.39	0.377	0.385	0.39

Notes:
1. Maximum temperature and pressure of cooling water supply.
2. Temperature and pressure of steam supply.
3. Delete.
4. Evaporator to require 60% turndown capability.
5. Evaporator overheads prior to condensate removal.
6. Vacuum system to enable concentration of feed at reduced temperature.
7. Maximum transfer rate. Minimum Transfer rate is 7,300 lbs/hr.
8. Maximum evaporator overhead condensate production capacity. Envelope A average conditions require 11,800 lbs/hr.
9. Maximum overhead vapor and noncondensable flow. Average vapor flow is 11,800 lbs/hr. Noncondensable flow also applies to average conditions.
10. Maximum transfer rate. Minimum transfer rate is 2430 lbs/hr.
11. Maximum transfer rate. Minimum transfer rate is 1880 lbs/hr.
12. Density and Specific Gravity based on sodium hydroxide solutions of same molarity. Does not include weight percent solids.
13. Maximum transfer rate. Minimum transfer rate is 7,300 lbs/hr.
14. Based on evaporator semibatch operation.

PROCESS DATA SHEET: VESSEL & PUMPS				Plant Item No. 24590-PTF-MV-TLP-VSL-00009A 24590-PTF-MV-TLP-VSL-00009B 24590-PTF-MV-TLP-PMP-00005A 24590-PTF-MV-TLP-PMP-00005B
Project: RPP-WTP				
Project No: 24590	Description: Treated LAW SBS Condensate Receipt Vessels and Pumps			
Site: Hanford				
Building No.: 10	Associated Drawing: 24590-PTF-M5-V17T-00005			
SUMMARY DATA	Units	Minimum	Nominal	Maximum
Batch Volume	Gal	N/A	80,000	N/A
Transfer Rate	gpm	10	13	38
Receipt Rate	gpm	N/A	175	N/A
Fluid Temperature	°F	68	113	167
Specific Gravity	N/A	1.02	1.02	1.02
Viscosity	cP	1	1	1
Internal Pressure	psig	-0.22	-0.14	0
Solids Content	wt %	0.30	0.34	0.41

PROCESS DATA SHEET: SYSTEM TLP				
Project: RPP-WTP				
Project No: 24590		Description: Treated LAW Evaporation - System TLP		
Site: Hanford				
Building No.: 10		Associated Drawing: 24590-PTF-M5-V17T-00005		
SUMMARY DATA	Units	Minimum	Nominal	Maximum
Treated LAW (TXP14)				
Transfer Rate	gpm	11.4	14.3	17.9
Fluid Temperature	°F	59	77	113
Specific Gravity	N/A	1.15	1.20	1.22
Viscosity	cP	2.0	3.3	4.0
LAW SBS Condensate (RLD21)				
Batch Volume	Gal	N/A	80,000	N/A
Transfer Rate	gpm	10	13	38
Receipt Rate	gpm	N/A	175	N/A
Fluid Temperature	°F	68	113	167
Specific Gravity	N/A	1.02	1.02	1.02
Viscosity	cP	1	1	1
Thermal Conductivity	BTU/(hr*ft-°F)	N/A	0.372	N/A
Treated LAW Concentrate (TLP02)				
Transfer Rate	gpm	5.6	9.2	13.7
Fluid Temperature	°F	77	122	150
Specific Gravity	N/A	1.33	1.40	1.57
Viscosity	cP	12.8	12.8	30.0
Vapor Pressure	torr	55	67	77
Thermal Conductivity	BTU/(hr*ft-°F)	N/A	0.397	0.399

APPENDIX E

Quality Level and Seismic Category for Evaporator Equipment

SSC	Description	QL	SC
FEP Separator Vessels	FEP-SEP-00001A/B	QL-1	SC-I
• Demister Pads	Pad Materials	CM	SC-II
• Upper Demister Pad Supports	Structural supports	CM	SC-II
• Lower Demister Pad Supports	Structural supports	QL-2	SC-II
• Internal Piping/Misc.	Bubble trays, spray rings, dip legs, etc.	QL-2	SC-II
TLP Separator Vessel	TLP-SEP-00001	QL-1*	SC-I*
• Demister Pads	Pad Materials	CM	SC-II
• Upper Demister Pad Supports	Structural supports	CM	SC-II
• Lower Demister Pad Supports	Structural supports	QL-2	SC-II
• Internal Piping/Misc.	Bubble trays, spray rings, dip legs, etc.	QL-2	SC-II
Reboilers	FEP-RBLR-00001A/B	QL-1	SC-I
	TLP-RBLR-00001	QL-1*	SC-I*
Recirculation Pumps, Motors, Speed Adjustable Drives, and Seal Barrier Systems	FEP-PMP-00009A/B, FEP-MTR-00009A/B	QL-1	SC-I
	TLP-PMP-00001, TLP-MTR-00001	QL-1*	SC-I*
	FEP-ASD-00009A/B, TLP-ASD-00001, and Pump Seal Barrier Systems	CM	SC-III
Feed Pumps, Motors, and Speed Adjustable Drives	TLP-PMP-00005A/B, TLP-MTR-00005A/B, TLP-ASD-00005A/B	CM	SC-III
Concentrate Pumps, Motors, and Speed Adjustable Drives	TLP-PMP-00011A/B, TLP-MTR-00011A/B, TLP-ASD-00011A/B	CM	SC-III
Black Cell Separator Vessel Offgas Pipework	Piping from the top section of the FEP Evaporator separator vessels to the 56' Elev. floor (ceiling of black cell).	QL-1	SC-I*
	Piping from the top section of the TLP Evaporator separator vessel to the 56' Elev. floor (ceiling of black cell).	QL-1*	SC-I*
Out-Cell Separator Vessel Offgas Pipework	Piping from 56' Elev. floor to the FEP Evaporator primary condenser in C3 room.	QL-1	SC-I*
	Piping from 56' Elev. floor to the TLP Evaporator primary condenser in C3 room.	QL-1*	SC-I*
	FEP-COND-00001A/B FEP-COND-00002A/B FEP-COND-00003A/B FEP-EJCTR-00040, -00041, -00042,and -00043	QL-1	SC-I*
	TLP-COND-00001 TLP-COND-00002 TLP-COND-00003 TLP-EJCTR-000064 and -00067	QL-1*	SC-I*
Condensate Collection Vessels	FEP-VSL-00005	CM	SC-III
	TLP-VSL-00002	CM	SC-III
Condensate Pumps, Motors, and Speed Adjustable Drives	FEP-PMP-00006A/B, FEP-MTR-00006A/B, FEP-ASD-00006A/B	CM	SC-III

	TLP-PMP-00002A/B, TLP-MTR-00002A/B, FEP-ASD-00002A/B	**CM**	**SC-III**
Antifoam Vessel	AFR-TK-00001	**CM**	**SC-IV**
Antifoam Pumps	AFR-PMP-00006, -00007, and –00008	**CM**	**SC-IV**
Steam Conditioning Skids	FEP Steam Conditioning Skids	**CM**	**SC-III**
	TLP Steam Conditioning Skid	**CM**	**SC-III**
Reboiler Steam Condensate Transfer Stations	FEP-VSL-00021, FEP-PMP-00010A/B FEP-VSL-00022, FEP-PMP-00011A/B	**CM**	**SC-III**
	TLP-VSL-00047, TLP-PMP-00012A/B	**CM**	**SC-III**

*These quality level and seismic category designations are higher than those required for safety as deemed necessary for commercial reasons. They are consistent with the Buyer's Authorization Basis document because they meet and exceed the minimum safety requirements. These designations are not necessarily reflected in their associated Buyer's P&IDs.

For CM material to the ASME or ASTM standards, any year of the standard is acceptable.

APPENDIX F

SEPARATOR VESSEL SKID SUPPORT LAYOUT

SEPARATOR VESSEL, EMBEDDED PLATES & SKID

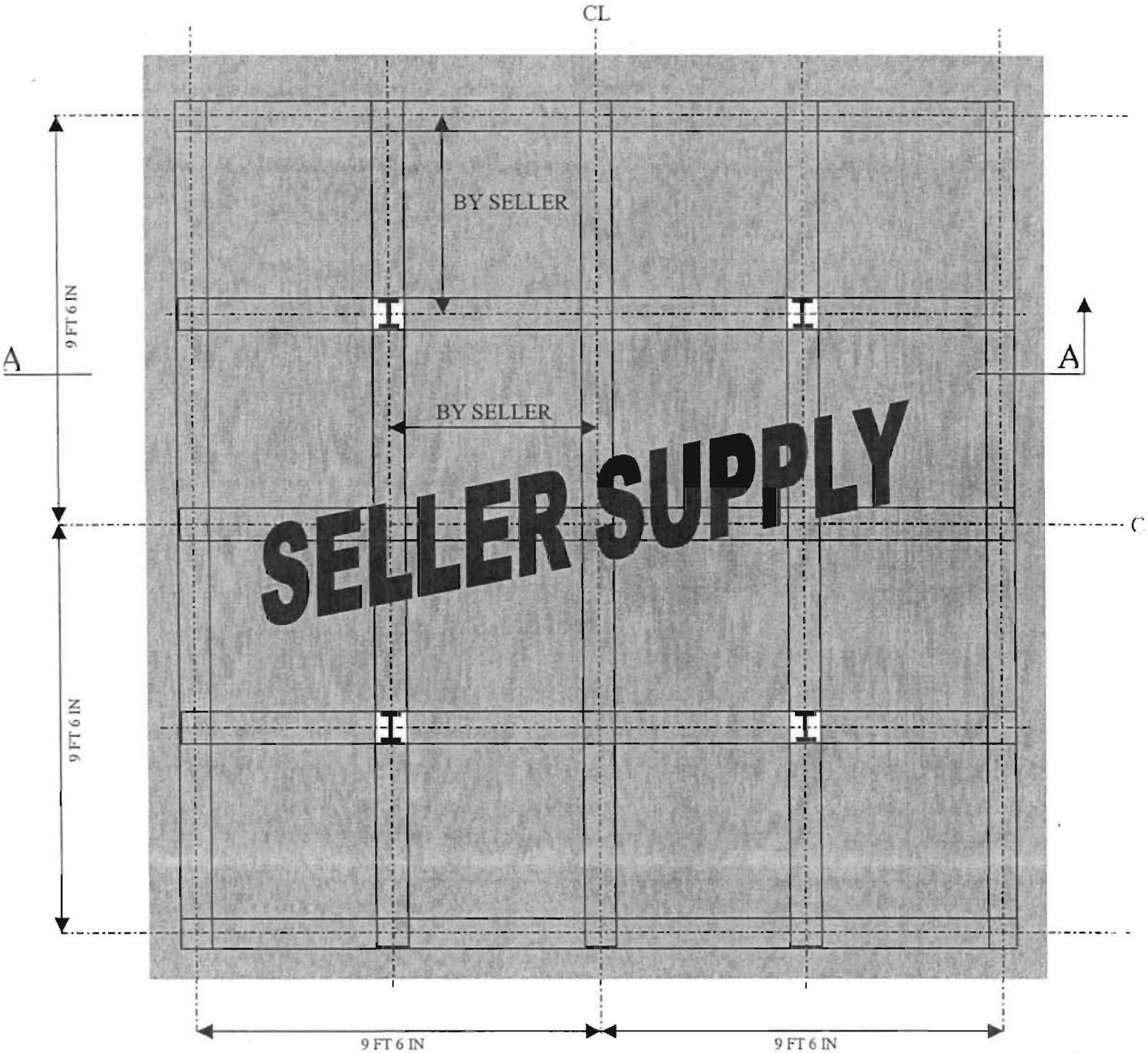

SKID PLAN VIEW

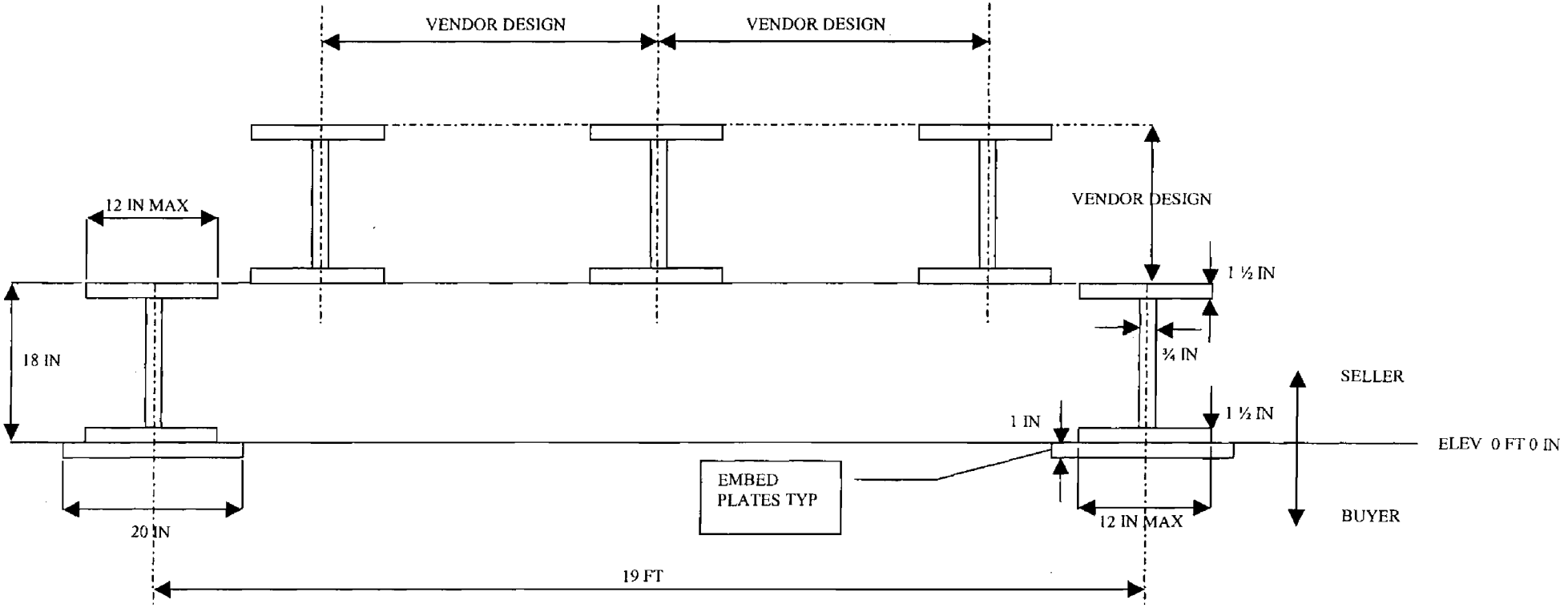
VENDOR DESIGN
VENDOR DESIGN
VENDOR DESIGN
12 IN MAX
18 IN
1 ½ IN
¾ IN
SELLER
1 IN
1 ½ IN
ELEV 0 FT 0 IN
EMBED
PLATES TYP
12 IN MAX
BUYER
20 IN
19 FT

SECTION A

APPENDIX G

HOT CELL REMOTE IMPACT WRENCH

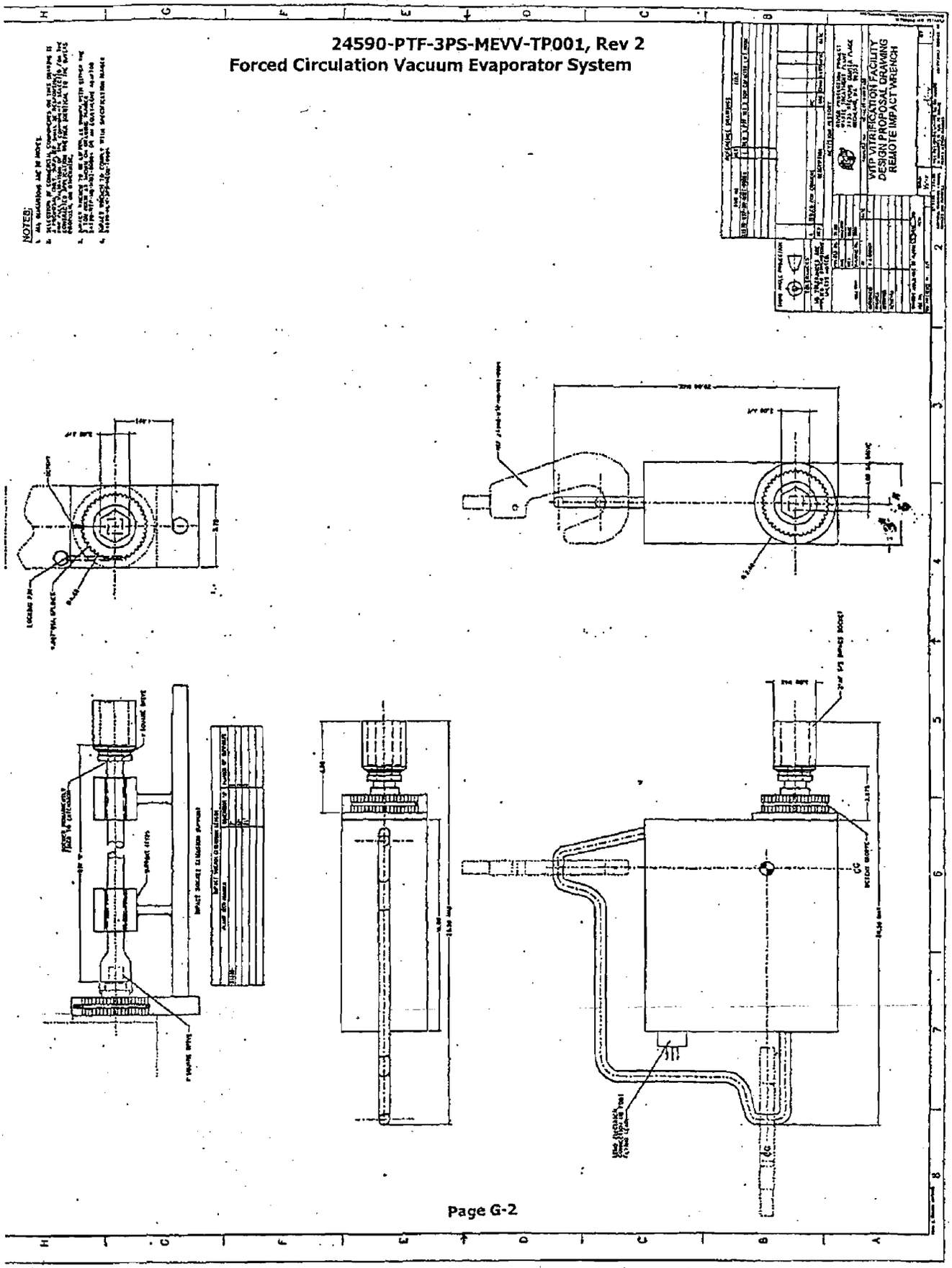
NOTES:
VITRIFICATION FACILITY
DESIGN PROPOSAL DRAWING
REMOTE IMPACT WRENCH

APPENDIX H

Deleted

APPENDIX I

FEP EVAPORATOR EQUIPMENT SKIDS LOCATION AND LAYOUT SKETCHES

SKETCH I-1
FEP EVAPORATOR EQUIPMENT LOCATIONS
PLANT VIEW ON THE 0-FT ELEVATION FLOOR

NOTES:
1. ITEMS INDICATED IN A HEAVY LINE ARE VENDOR SUPPLY

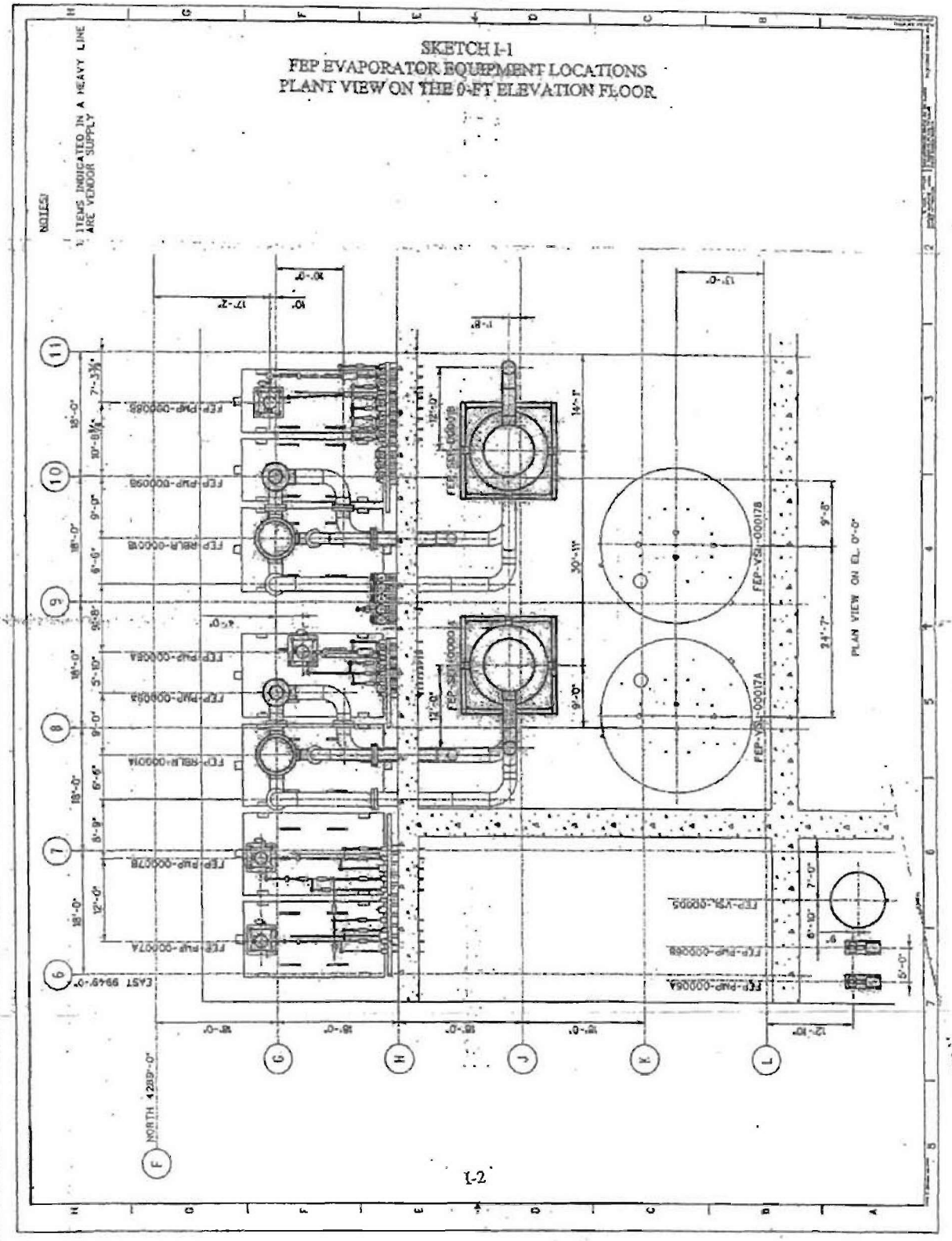

Best Available Copy

SKETCH I-2
FEP EVAPORATOR EQUIPMENT LOCATIONS
PLANT VIEW ON THE 56-FT ELEVATION FLOOR

NOTES
1. ITEMS INDICATED IN A HEAVY LINE ARE VENDOR SUPPLY

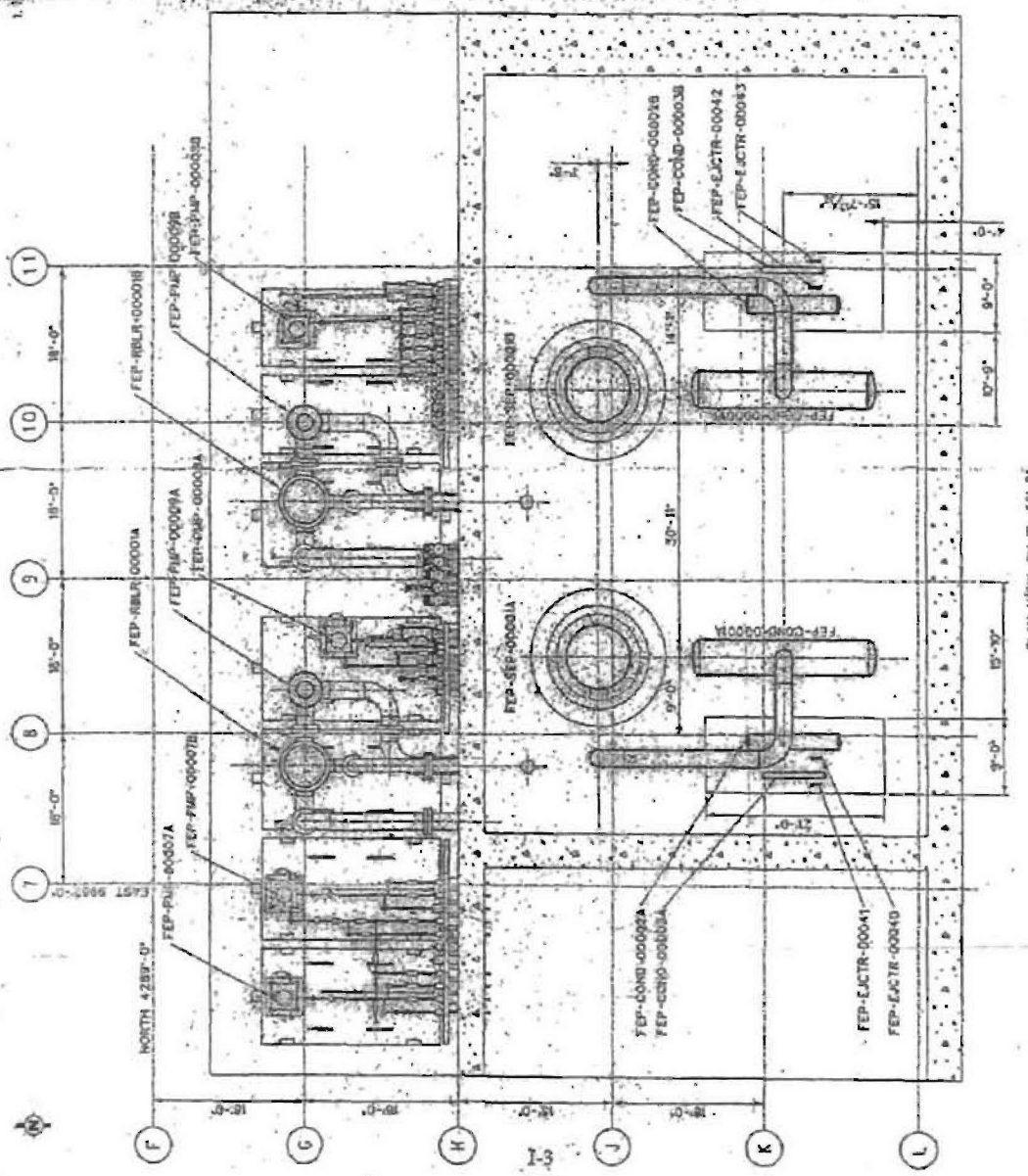

Best Available Copy

SKETCH I-3
ELEVATION VIEW LOOKING WEST
OF FEP EVAPORATOR EQUIPMENT LOCATIONS

NOTES:
1. ITEMS INDICATED IN A HEAVY LINE ARE VENDOR SUPPLY

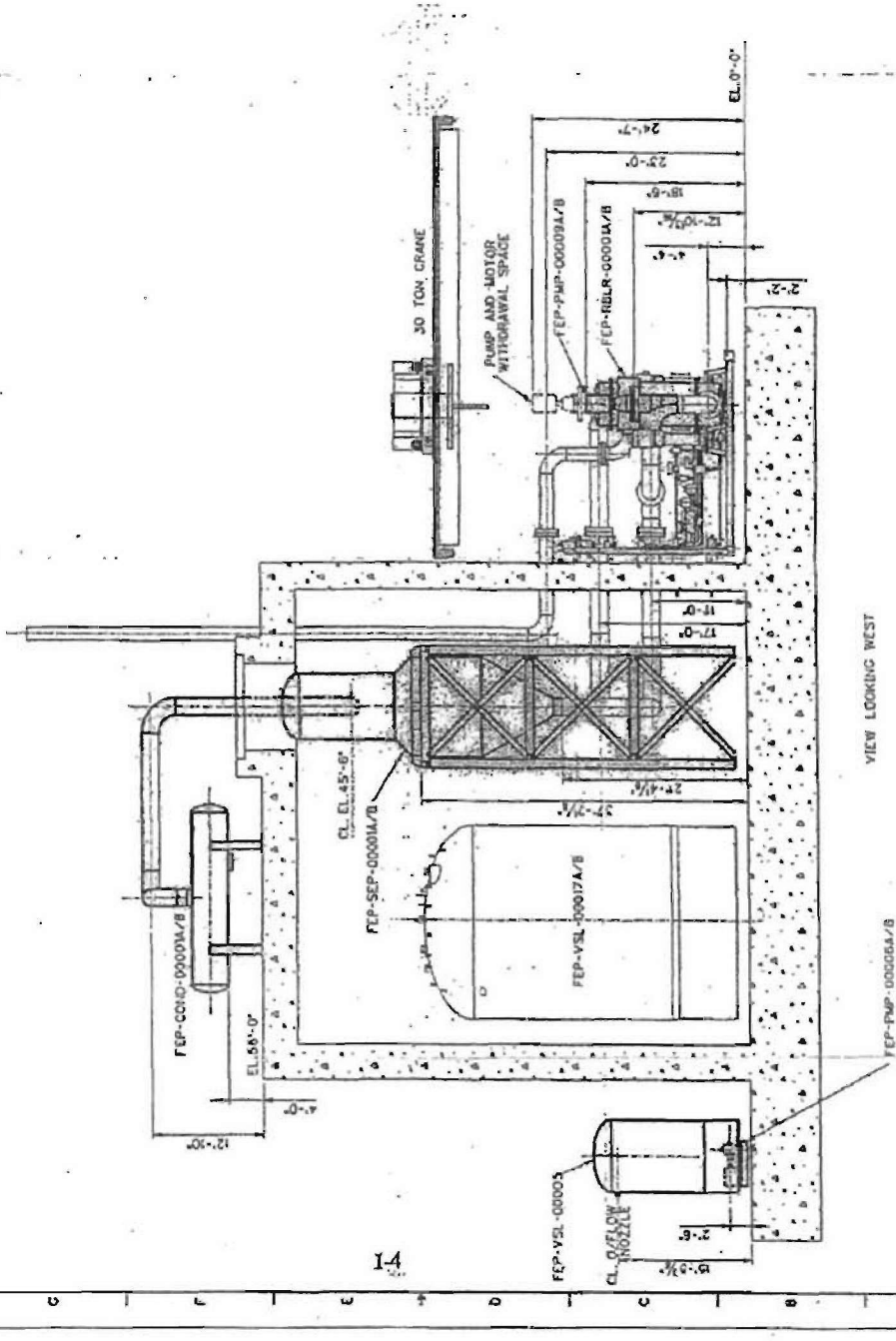

Best Available Copy

SKETCH I-4
ELEVATION VIEW LOOKING NORTH
OF FEP EVAPORATOR EQUIPMENT LOCATIONS

NOTES:
1. ITEMS INDICATED IN A HEAVY LINE ARE VENDOR SUPPLY

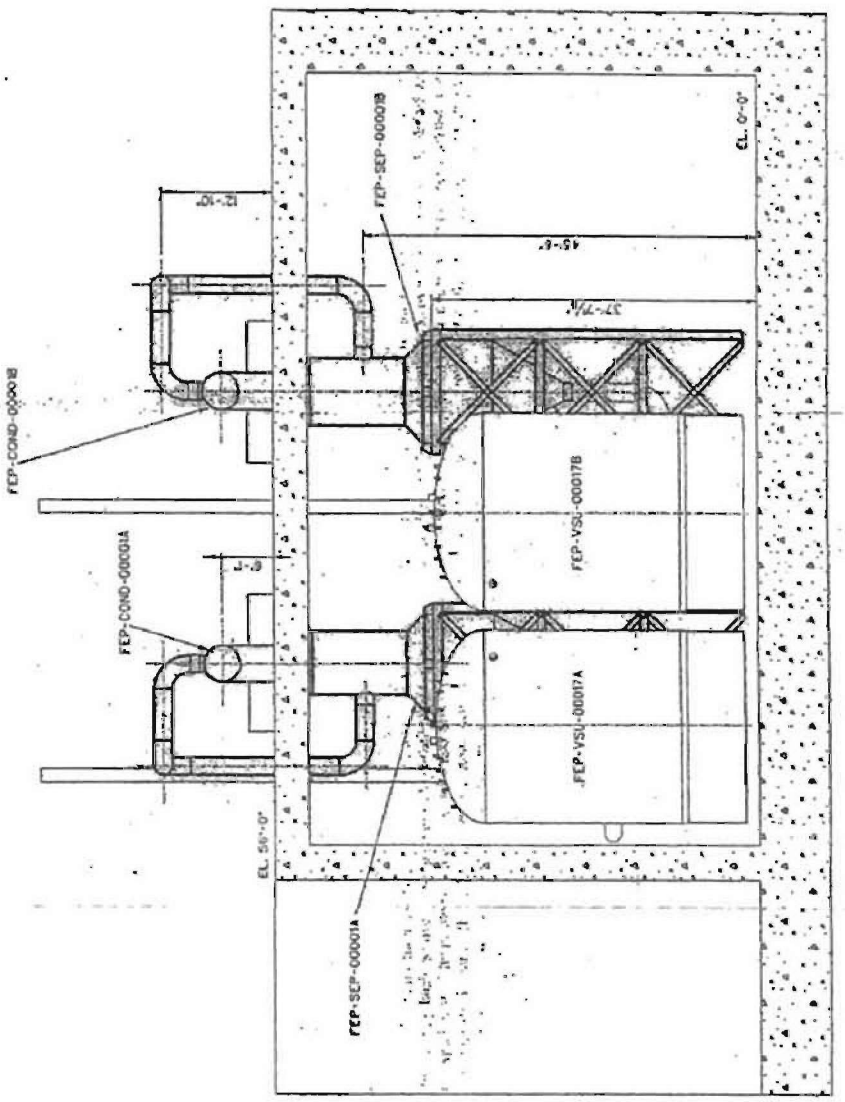

Best Available Copy

SKETCH I-5
ELEVATION VIEW LOOKING SOUTH
OF FEP EVAPORATOR EQUIPMENT LOCATIONS

NOTES:
1. ITEMS INDICATED IN A HEAVY LINE ARE VENDOR SUPPLY

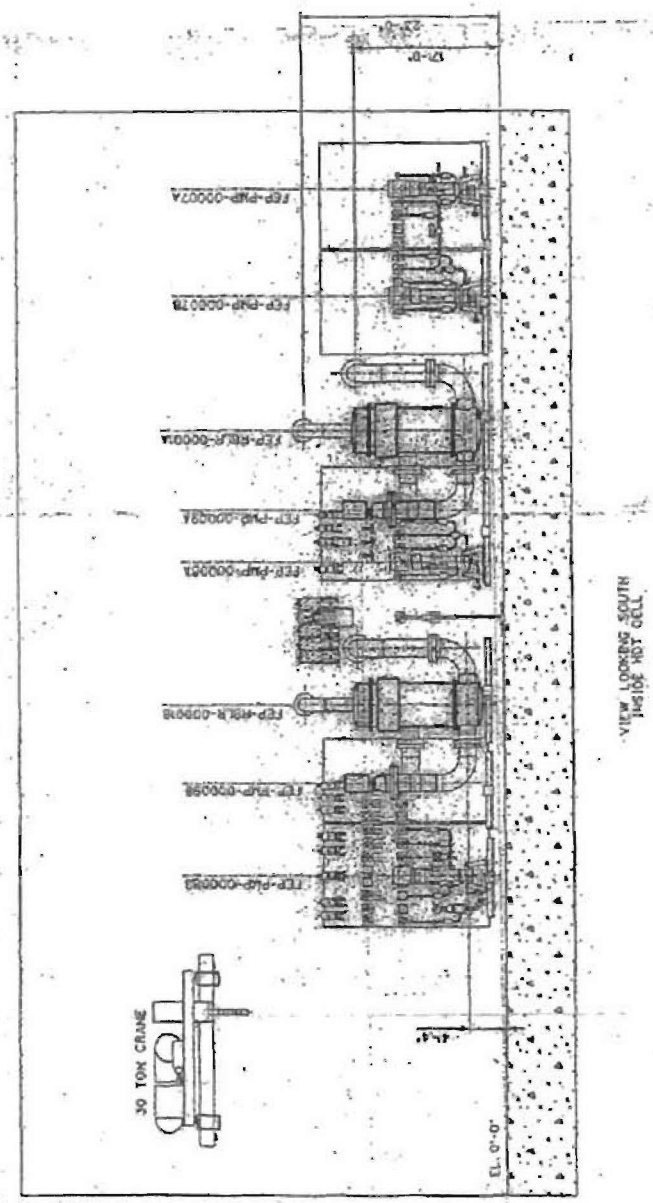

Best Available Copy

SKETCH F6
ISOMETRIC SKETCH FOR FEP EVAPORATOR FEED
FROM FEED VESSEL TO FEEP PUMP

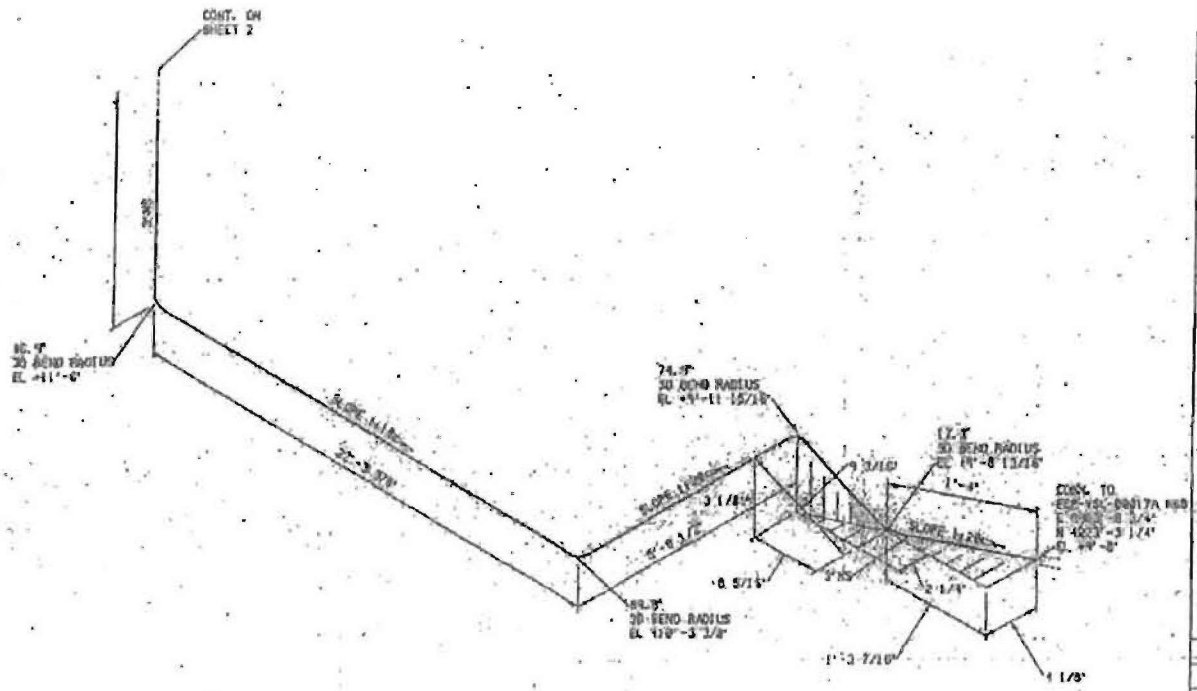

NOTES:

1. FOR GENERAL NOTES AND LEGEND SEE DWG. 24590-PTF-P3-P001-00000.
2. SEE DWG. 24590-WOF-E2-C121-00002 FOR CONVERSION FROM PTF FACILITY ELEVATIONS TO SITE ELEVATIONS. PTF FACILITY ELEVATION 0'-0" EQUALS SITE ELEVATION 678'-0" MSL

SHOP MATERIALS

PART NO	COMPONENT DESCRIPTION	W.S. LENGTHS	QTY	BECHTEL STK CODE
	PIPE			
1	PIPE, A312TP316/316L, SMLS, SCH40S, BBE	3		
2	PIPE, A312TP316/316L, SMLS, SCH40S, BBE	3		

24590-PTF-3PS-MEVV-TP001, Rev 2
Forced Circulation Vacuum Evaporator System

PRELIMINARY

REV	DATE	DESCRIPTION	DRN	CKD	STRESS	RVWD	APVD

REVISION HISTORY

RIVER PROTECTION PROJECT
WASTE TREATMENT PLANT
2435 STEVENS CENTER PLACE
RICHLAND, WA 99352

CONTRACT No: DE-AC27-01RV14136

FIELD: NO DATA | CONST. WORK AREA:

PRETREATMENT FACILITY
ISOMETRIC

LINE No. FEP-PZ-80239-S12A-3 | PIPE SPEC: S12A

DWG No. 1 | REV

CONTENT APPLICABLE TO ALARA? YES NO
ADR NO. REV.
QUALITY LEVEL • | SEISMIC CAT. •

PLOTTED BY: gridley | PLOT DATE: 03/22/2003 10:47:22 AM

© Tiso Vespa 2002, BECHTEL DGN

FORM: ISOGRAB.DGN 02/2003 | COMPUTER GENERATED - MANUAL CHANGES NOT PERMITTED | PGE File: FEPP20239

Best Available Copy

SKETCH I-7
ISOMETRIC SKETCH FOR FEP EVAPORATOR FEED
FROM FEP2 VESSEL TO FEP2 PUMP (Cont.)

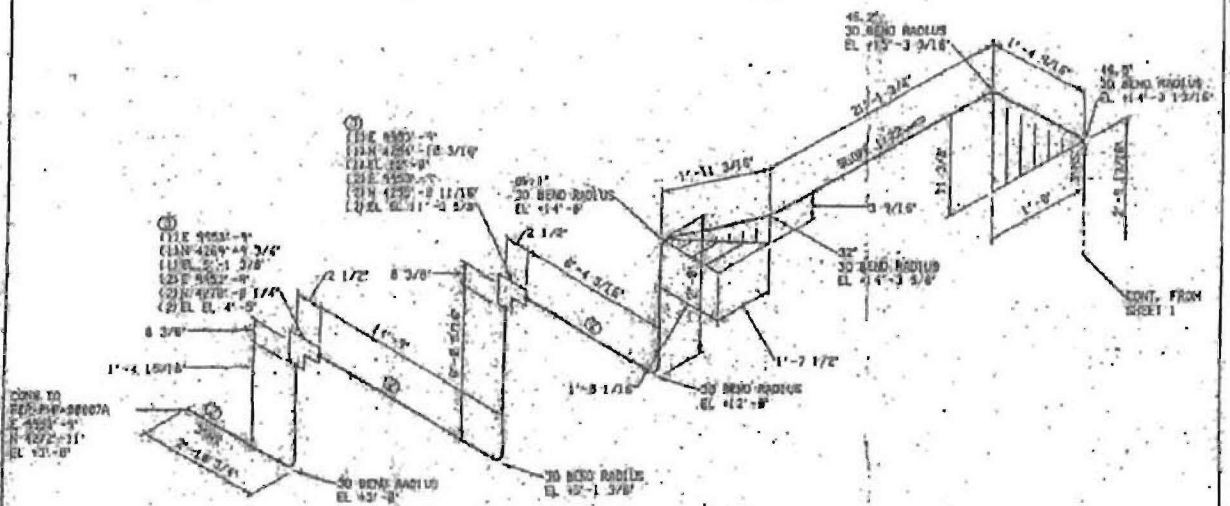

NOTES:

1. FOR GENERAL NOTES AND LEGEND SEE DWG. 24590-PTF-P3-P3G1-00000.
2. SEE DWG. 24590-BOF-C2-C121-00002 FOR CONVERSION FROM PTF FACILITY ELEVATIONS TO SITE ELEVATIONS. PTF FACILITY ELEVATION 0'-0" EQUALS SITE ELEVATION 893'-0" MSL.

BILL OF MATERIALS

PART NO	COMPONENT DESCRIPTION	M.S. (LBS/EA)	QTY	SECRTEL STK CODE
	PIPE			
1	PIPE, 4IN/3IN/2IN EL, SCLS, SCH40S, 316	3		
2	PIPE, 4IN/3IN/2IN EL, SCLS, SCH40S, 316	3		
	INSTRUMENTS			
3	PURGE	3		

24590-PTF-3PS-MEVV-TP001, Rev 2
Forced Circulation Vacuum Evaporator System

PRELIMINARY

REV	DATE	DESCRIPTION	DRN	DSGN	STRESS	SYSTEM	APVD

REVISION HISTORY

RIVER PROTECTION PROJECT
WASTE TREATMENT PLANT
2435 STEVENS CENTER PLACE
RICHLAND, WA 99352

CONTRACT NO: DE-AC27-01RV14136

FIELD NO DATA | CONST. WORK AREA

PRETREATMENT FACILITY
ISOMETRIC

LINE No. FEP-PZ-00239-S1 2A-3 | PIPE SPEC: S1 2A

DWG No. 2 | REV

PLOTTED BY: pdlong | PLOT DATE: 03/22/2003 10:50:55 AM

CONTENT APPLICABLE TO ALARA: YES NO
CDR NO. REV.
QUALITY LEVEL: 4 | SEISMIC CAT.: 4

FORM ISOBORDER.DGN 02/2003 | COMPUTER GENERATED - MANUAL CHANGES NOT PERMITTED | PCF File: FEPP280239

Best Available Copy

SKETCH I-3
ISOMETRIC SKETCH FOR FEP EVAPORATOR FEED
FROM FEED VESSEL TO FEEP PUMP (Cont.)

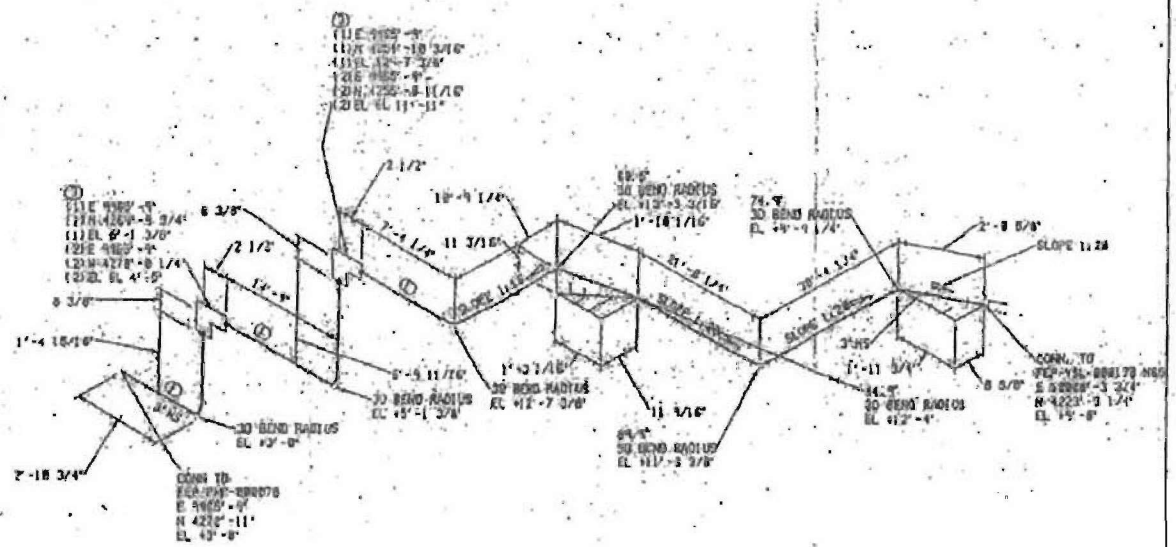

NOTES:

1. FOR GENERAL NOTES AND LEGEND SEE DWG. 24590-WTP-M5-P15T-01X00.
2. SEE DWG. 24590-BOF-C2-C127-00002 FOR CONVERSION FROM PTF FACILITY ELEVATIONS TO SITE ELEVATIONS. PTF FACILITY ELEVATION 0'-0" EQUALS SITE ELEVATION 678'-0" MSL.

SHOP MATERIALS

PART NO	COMPONENT DESCRIPTION	N.B. (INCHES)	QTY	DICKITEL STK CODE
	PIPE			
1	PIPE, A312TP316/316L, SMLS, SCH40S, BBE	3		
2	PIPE, A312TP316/316L, SMLS, SCH40S, BBE	3		
	INSTRUMENTS			
3	FLOWX	3		

24590-PTF-3PS-MEVV-TP001, Rev 2
Forced Circulation Vacuum Evaporator System

PRELIMINARY

REV	DATE	DESCRIPTION	DRN	CHKD	STRESS	RVWD	APVD

REVISION HISTORY

RIVER PROTECTION PROJECT
WASTE TREATMENT PLANT
2435 STEVENS CENTER PLACE
RICHLAND, WA 99352

CONTRACT No: DE-AC27-01RV14136

PROJ: NO DATA | CONST. WORK AREA:

PRETREATMENT FACILITY
ISOMETRIC

LINE No. FEP-PZ-00089-S12A-3 | PIPE SPEC: S12A

DWG No. 1 | REV

CONTENT APPLICABLE TO ALARA: YES NO
DWG NO. REV.
QUALITY LEVEL | SEISMIC CAT.

PLOTTED BY: grisling | PLOT DATE: 03/22/2003 10:53:46 AM

FORM: ISOBORDON 02/2003 | COMPUTER GENERATED - MANUAL CHANGES NOT PERMITTED | PCF File: FEP00089.DWG

Best Available Copy

SKETCH 1-9
HOT CELL WALL PENETRATION LOCATION
SKETCH FOR FEP-EVAPORATOR FEED

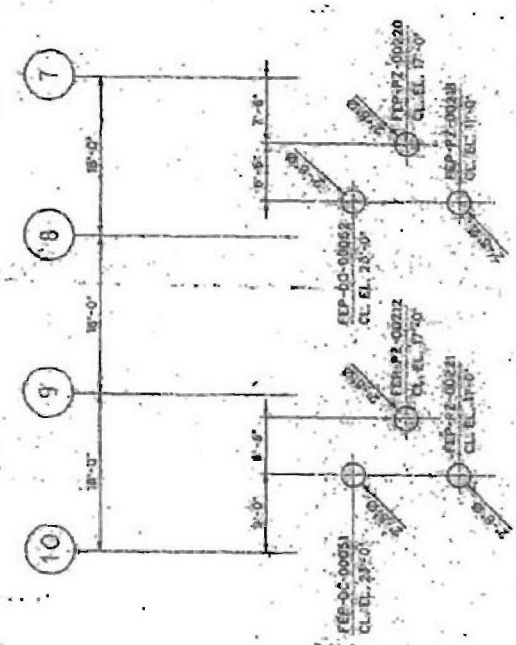

Best Available Copy

APPENDIX J

TLP EVAPORATOR EQUIPMENT SKIDS LOCATION AND LAYOUT SKETCHES

SKETCH J-1
TLP EVAPORATOR EQUIPMENT LOCATIONS
PLANT VIEW ON THE 0-FT ELEVATION FLOOR

NOTES:

1. ITEMS INDICATED IN A HEAVY LINE ARE VENDOR SUPPLY

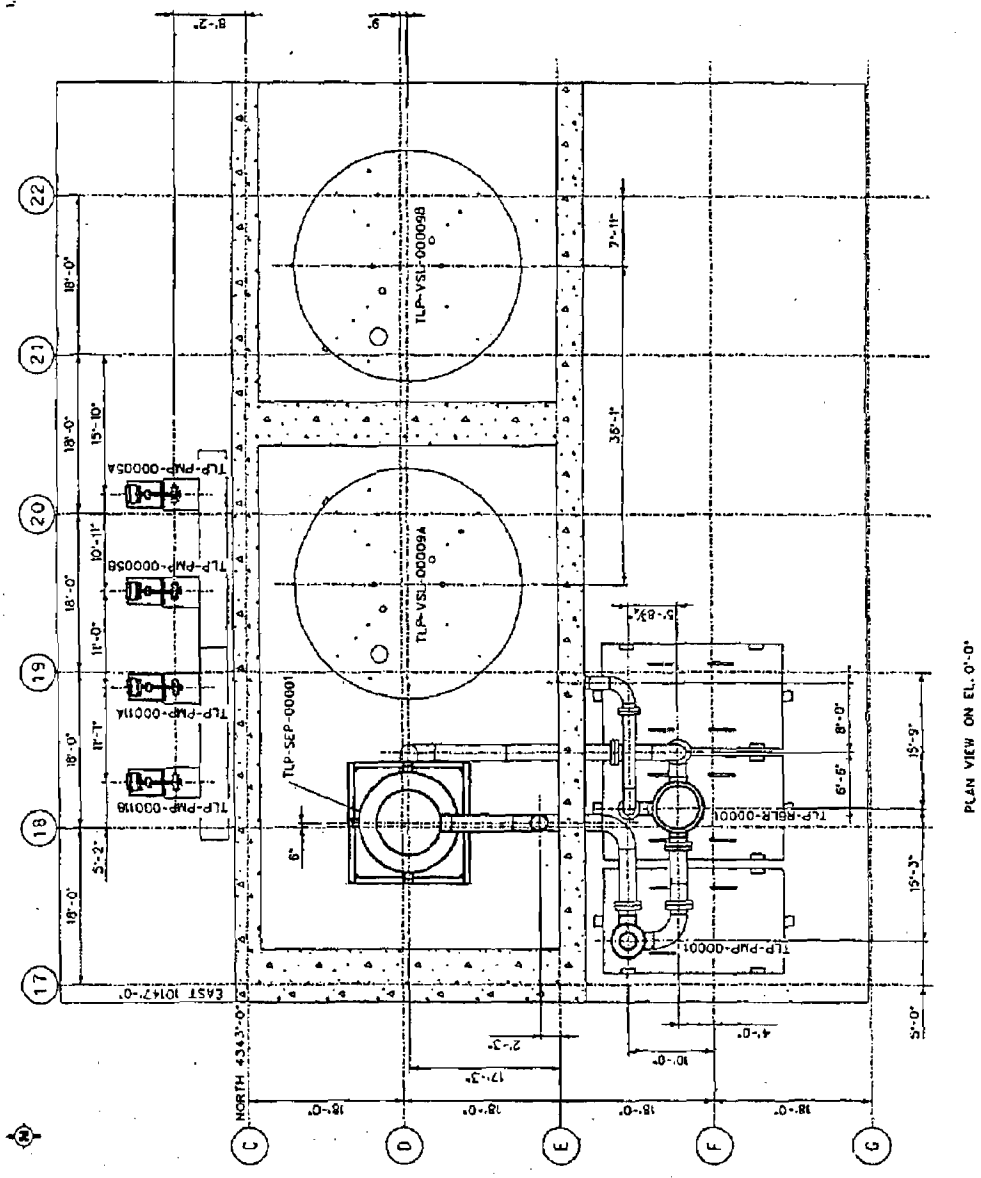

NOTES:

1. ITEMS INDICATED IN A HEAVY LINE ARE VENDOR SUPPLY

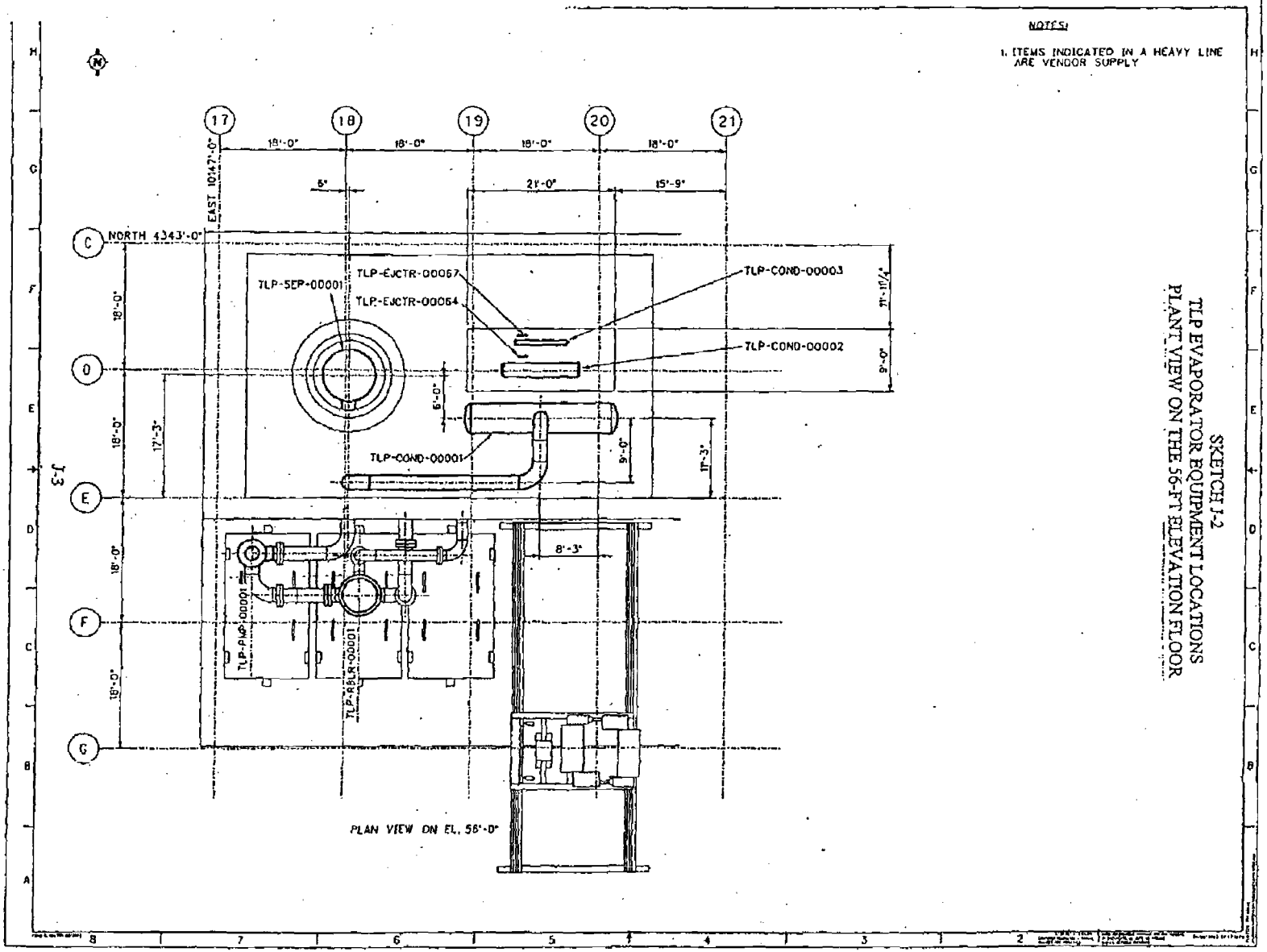

SKETCH J-2
TLP EVAPORATOR EQUIPMENT LOCATIONS
PLANT VIEW ON THE 56-FT ELEVATION FLOOR

SKETCH J-3
ELEVATION VIEW LOOKING EAST
OF TLP EVAPORATOR EQUIPMENT LOCATIONS

NOTES:
1. ITEMS INDICATED IN A HEAVY LINE ARE VENDOR SUPPLY

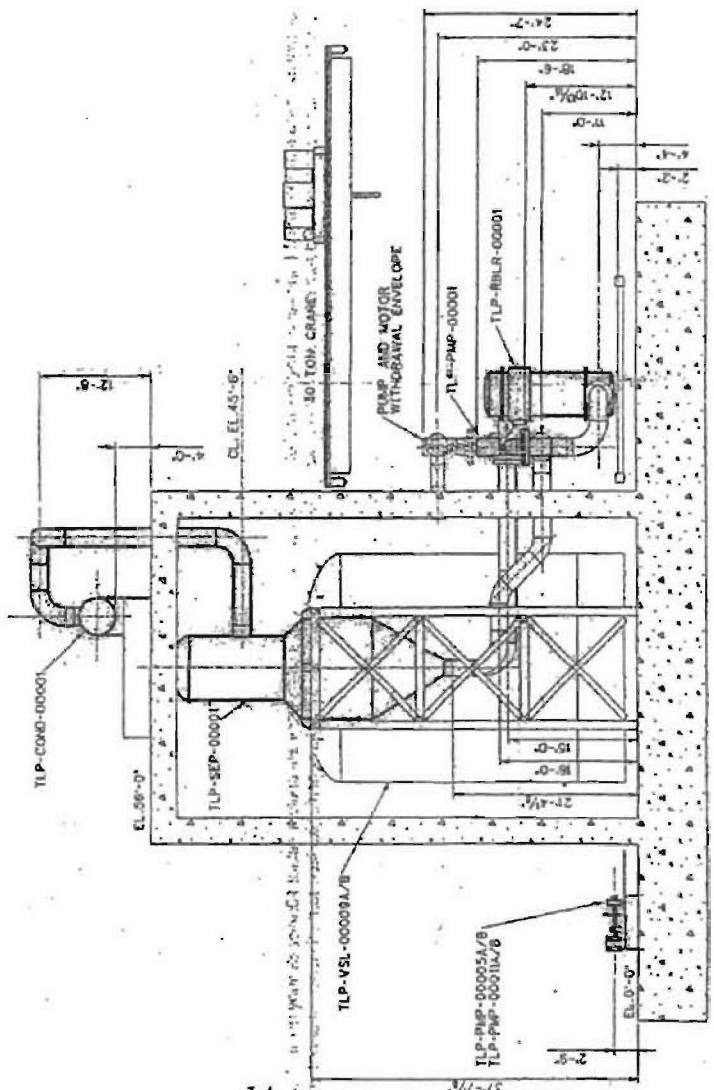

Best Available Copy

SKETCH J-4
ELEVATION VIEW LOOKING NORTH
OF TLP EVAPORATOR EQUIPMENT LOCATIONS

NOTES:
1. ITEMS INDICATED IN A HEAVY LINE ARE VENDOR SUPPLY.

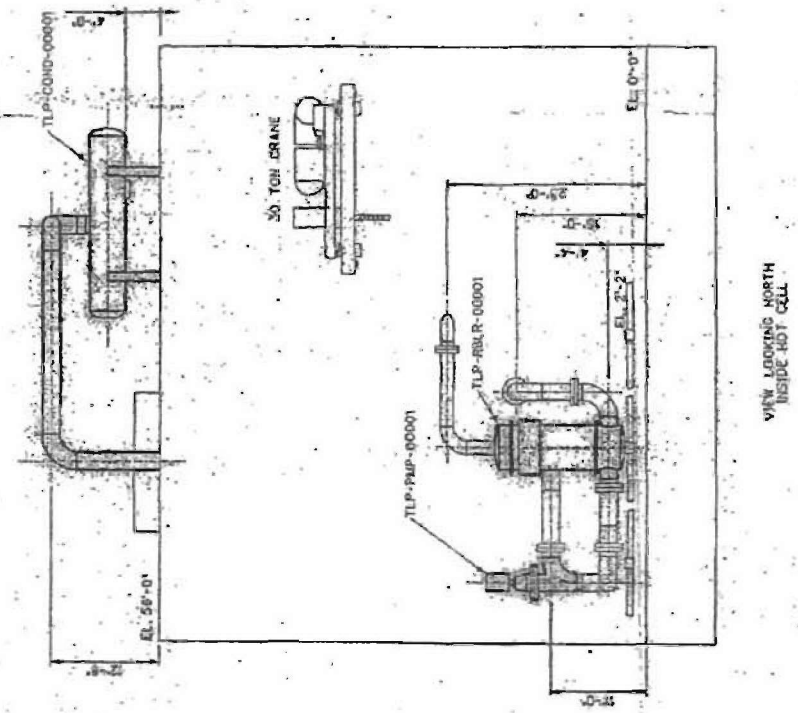

Best Available Copy

SKETCH J-5
ELEVATION VIEW LOOKING SOUTH
OF TLP EVAPORATOR EQUIPMENT LOCATIONS

NOTES:
1. ITEMS INDICATED IN A HEAVY LINE ARE VENDOR SUPPLY

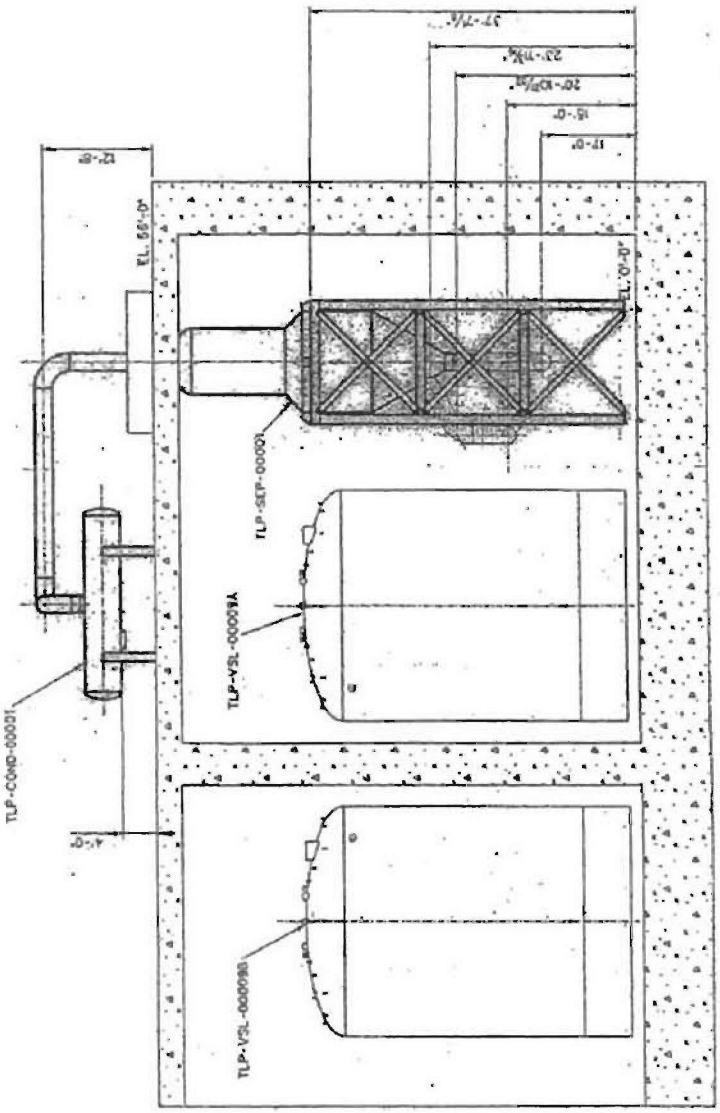

Best Available Copy

SKETCH J-6
PLANT VIEW ON THE 0-FT ELEVATION
OF TLP CONDENSATE EQUIPMENT LOCATIONS

NOTES:
1. ITEMS INDICATED IN A HEAVY LINE ARE VENDOR SUPPLY

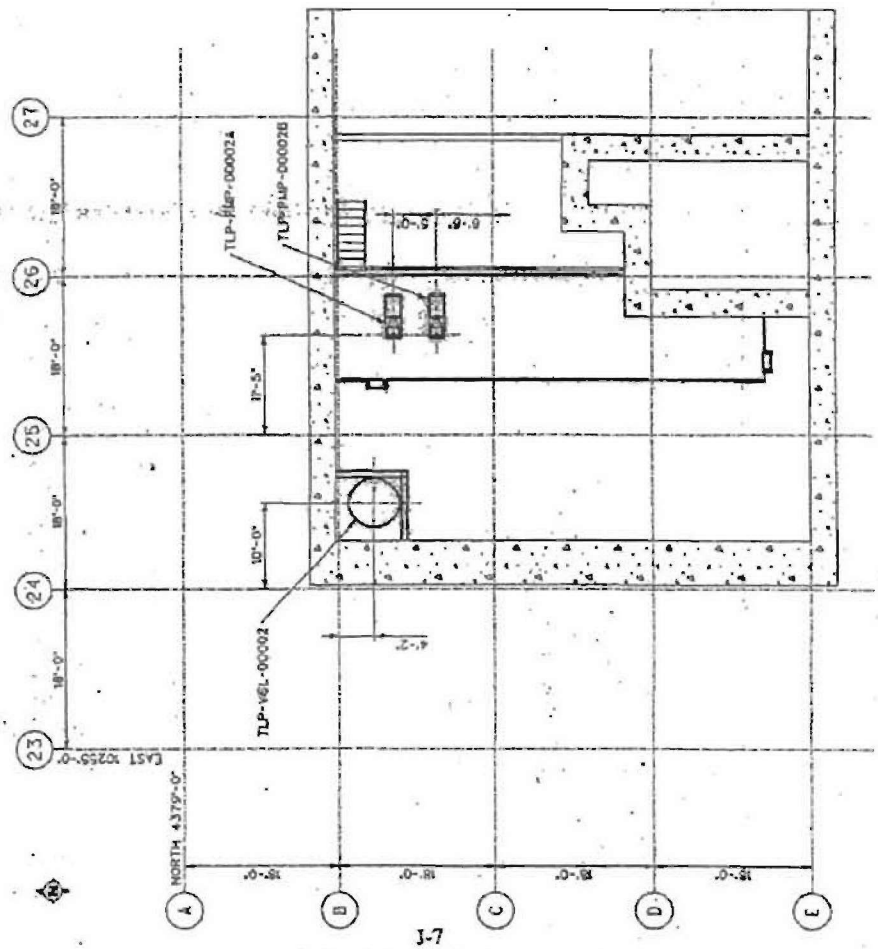

Best Available Copy

SKETCH J-7
ELEVATION VIEW LOOKING NORTH
OF TLP CONDENSATE EQUIPMENT LOCATIONS

NOTES:
1. ITEMS INDICATED IN A HEAVY LINE ARE VENDOR SUPPLY

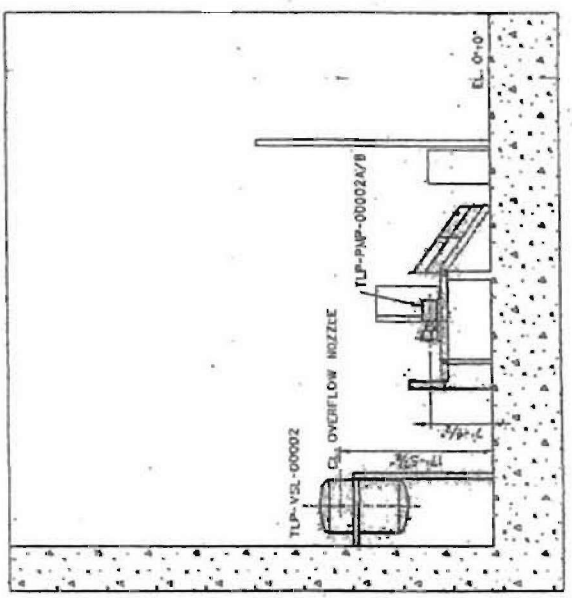

Best Available Copy

SKETCH 17-8
ISOMETRIC SKETCH FOR TLP EVAPORATOR FEED
FROM FEED VESSEL TO FEED PUMP

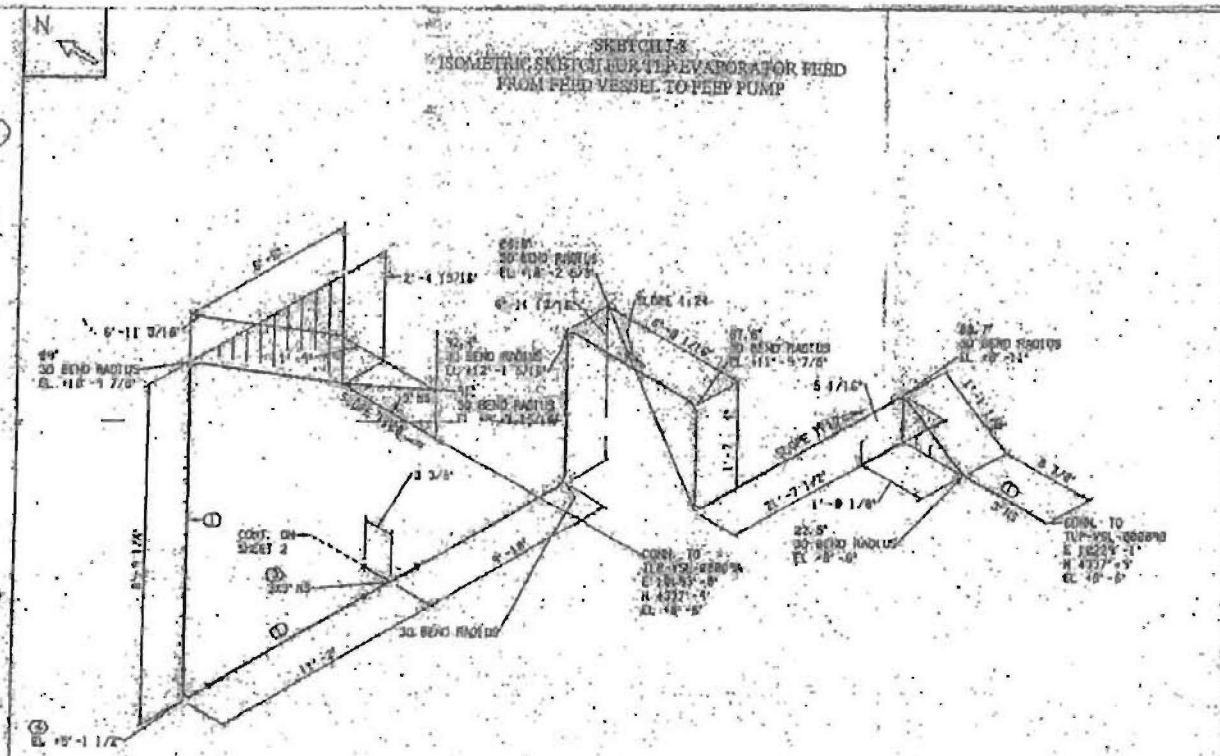

NOTES:
1. FOR GENERAL NOTES AND LEGEND SEE DWG. 24590-PTF-M-S-9301-00000.
2. SEE DWG. 24590-BOP-C2-C121-00002 FOR CONVERSION FROM PTF FACILITY ELEVATIONS TO SITE ELEVATIONS. PTF FACILITY ELEVATION 0'-0" EQUALS SITE ELEVATION 678'-0" MSL.

SHOP MATERIALS

PART NO.	COMPONENT DESCRIPTION	N.S. (INCHES)	QTY	REQTD. STK SIZE
	PIPE			
1	PIPE, ASTM A312/316L, SMLS, SCH40S, BE	3		69'-1" PRECONDITIONED
2	PIPE, ASTM A312/316L, SMLS, SCH40S, BE	3		
	FITTINGS			
3	TEE, BW, ASTM A403/316L, SCH40S	3X3		
4	ELL - 90, LR, BW, ASTM A403/316L-S, SCH40S	3		

24590-PTF-3PS-MEV-TP001, Rev 2
Forced Circulation Vacuum Evaporator System

PRELIMINARY

REV	DATE	DESCRIPTION	DRN	CHKD	STRESS	PROJ	ENG

REVISION HISTORY

HANFORD SITE
HANFORD, WA 99352

CONTRACT No: DE-AC27-01RV14136

PROJ: 24590-PTF-MEV-TP001 | CONST. WORK AREA:

PRETREATMENT FACILITY
ISOMETRIC

LINE No. | PIPE SPEC: S1 2C

DWG No. | REV: 1

CONTENT APPLICABLE TO ALARA? YES NO
ADR NO. REV.
QUALITY LEVEL QL-2 SEISMIC CAT. SC-1T

PLOTTED BY: grifding PLOT DATE: 03/24/2003 19:45:27 AM

FORM ISOBORDER 02/2003 COMPUTER GENERATED - MANUAL CHANGES NOT PERMITTED PCF File: TLPSUCTION

Best Available Copy

SKETCH 3-9
ISOMETRIC SKETCH FOR TLP EVAPORATOR FEED
FROM FEED VESSEL TO FEED PUMP (Cont.)

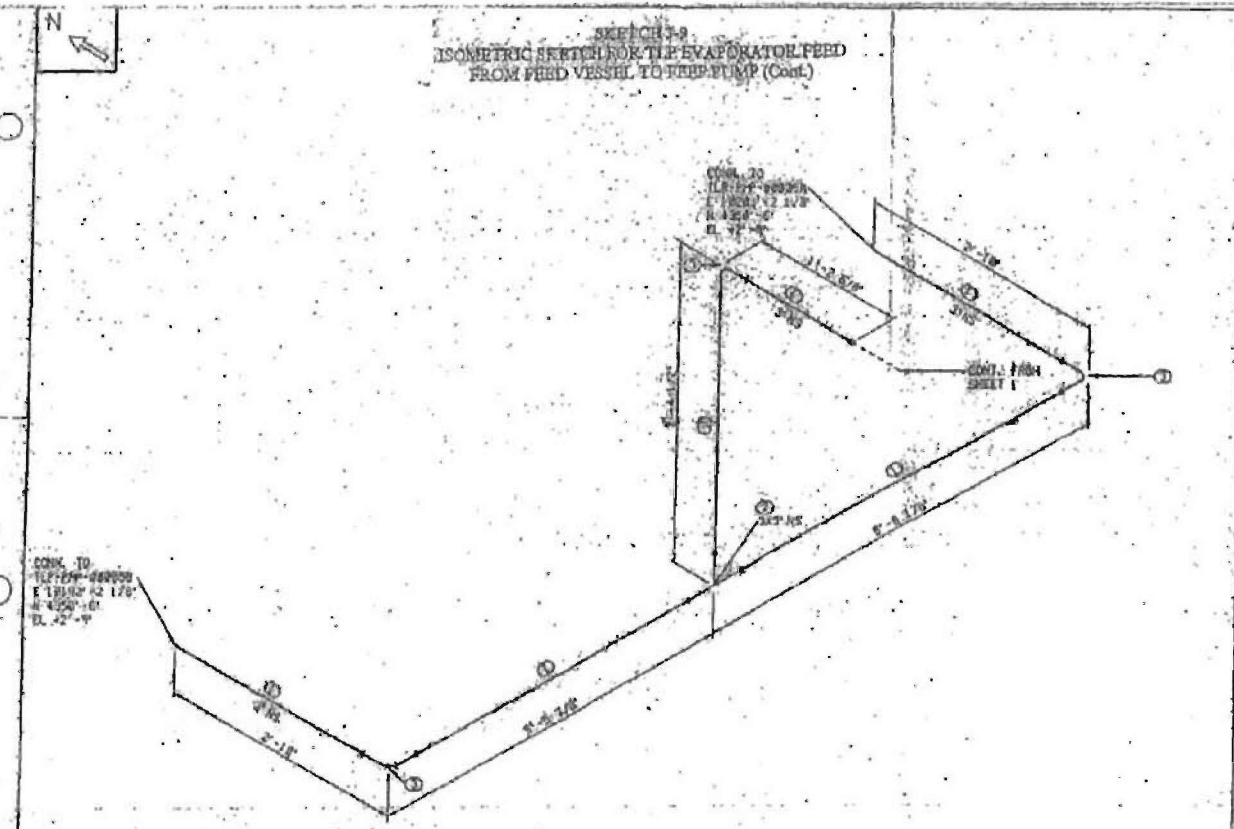

NOTES:

1. FOR GENERAL NOTES AND LEGEND SEE DWG. 24590-PTF-P3-P307-D3002.
2. SEE DWG. 24590-BOF-G2-G127-D0002 FOR CONVERSION FROM PTF FACILITY ELEVATIONS TO SITE ELEVATIONS. PTF FACILITY ELEVATION 0'-0" EQUALS SITE ELEVATION 678'-0" MSL.

PART NO.	COMPONENT DESCRIPTION	N.S. ITEM/REQ	QTY	MATERIAL TTK CODE
	PIPE			
1	PIPE, A312TP316/316L, SMLS, SCH40S, BE	3	[illegible]	[illegible]
	FITTINGS			
2	EL, 90, A403WP316, SCH40	XXI		
3	EL - 90, LR, BV, A403WP316/316L-S, SCH40S	3		

24590-PTF-3PS-MEVV-TP001, Rev 2
Forced Circulation Vacuum Evaporator System

PRELIMINARY

REV	DATE	DESCRIPTION	DRN	CHKD	STRESS	AVWD	APVD
		REVISION HISTORY					

WASTE DEMONSTRATION PROJECT
HANFORD DEMONSTRATION PLANT
2435 STEVENS CENTER PLACE
RICHLAND, WA 99352

CONTRACT No: DE-AC27-01RV14136

PROJ: 24590-PTF-[illegible]-TLP-[illegible] CONST. WORK AREA:

PRETREATMENT FACILITY
ISOMETRIC

LINE No. PIPE SPEC: S12C

DWG No. 2 REV

PLOTTED BY: [illegible] PLOT DATE: 03/24/2003, 11:37:20 AM

CONTENT APPLICABLE TO ACRAT? YES NO
ACR NO. REV.

QUALITY LEVEL QL-2 SEISMIC CAT. SC-II

Best Available Copy

SKETCH J-10
HOT CELL WALL PENETRATION LOCATION
SKETCH FOR TLP EVAPORATOR FEED

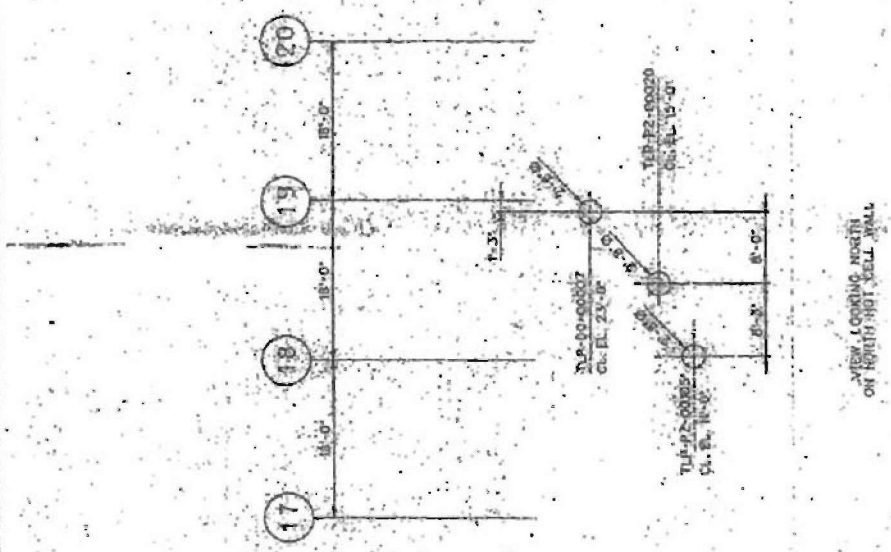

APPENDIX K

ANTIFOAM EQUIPMENT SKIDS LOCATION AND LAYOUT SKETCHES

SKETCH K-1
ANTIFOAM EQUIPMENT LOCATIONS
PLANT VIEW ON THE 77-FT ELEVATION FLOOR

NOTES:
1. ITEMS INDICATED IN A HEAVY LINE ARE VENDOR SUPPLY.

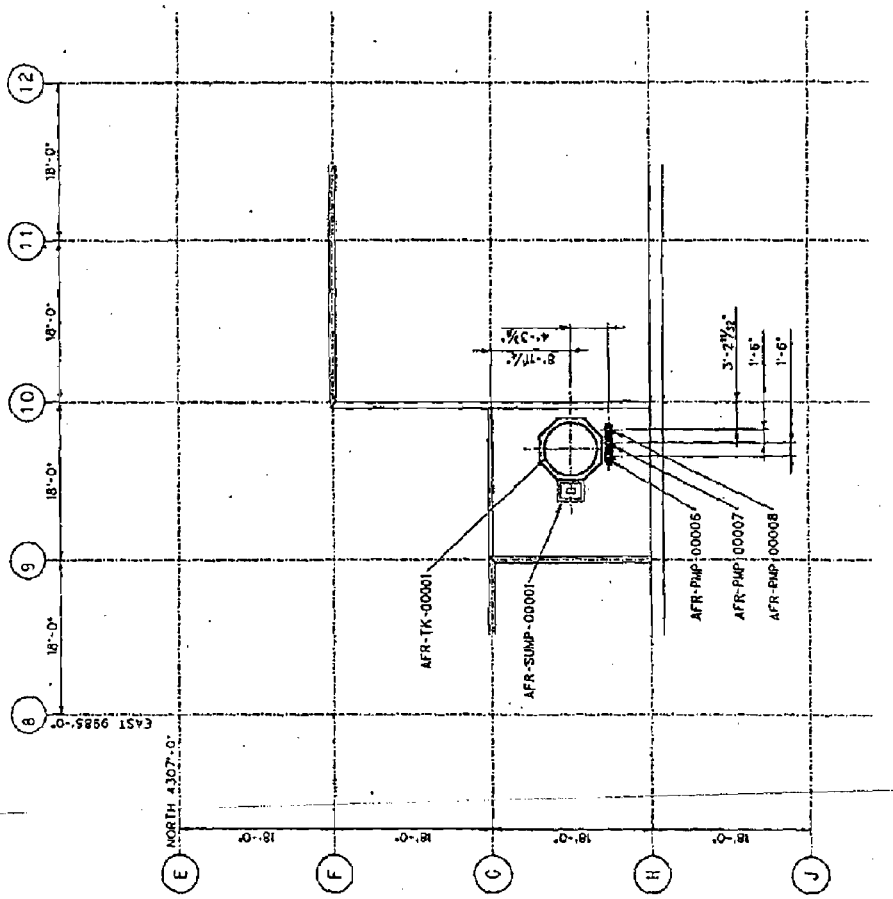

SKETCH K-2
ELEVATION VIEW LOOKING EAST
OF ANTIFOAM EQUIPMENT LOCATIONS

NOTES:
1. ITEMS INDICATED IN A HEAVY LINE ARE VENDOR SUPPLY.

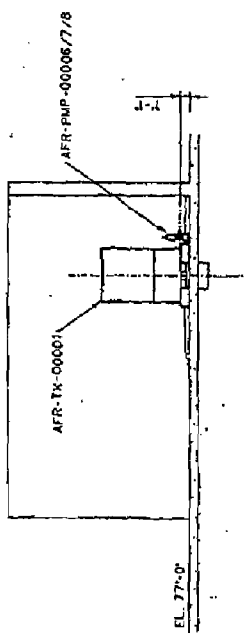

VIEW LOOKING EAST

APPENDIX L

REBOILER STEAM CONDENSATE TRANSFER STATION LOCATION AND LAYOUT SKETCHES

APPENDIX L

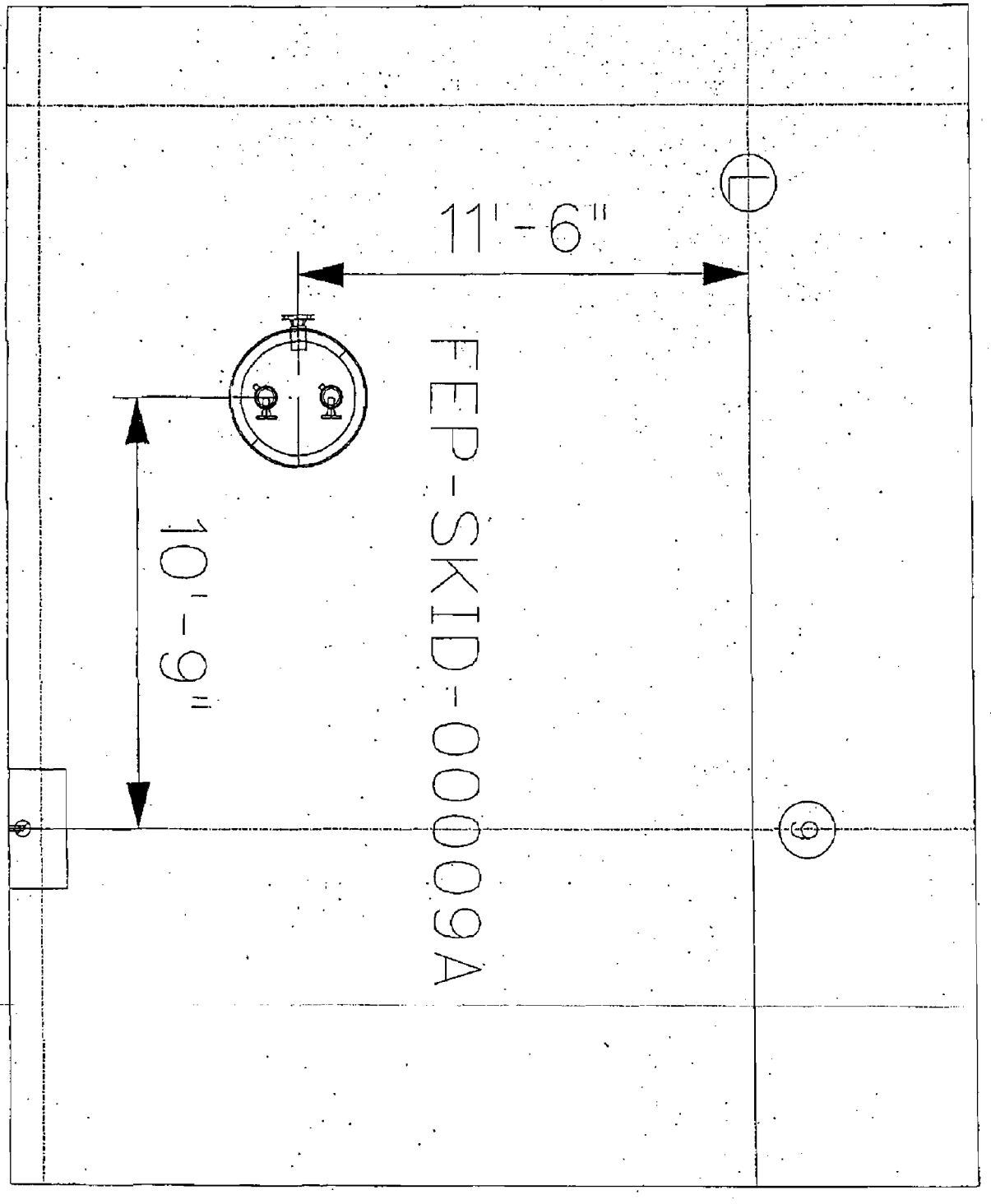

Plan View
@ 0'-0" elevation

APPENDIX L

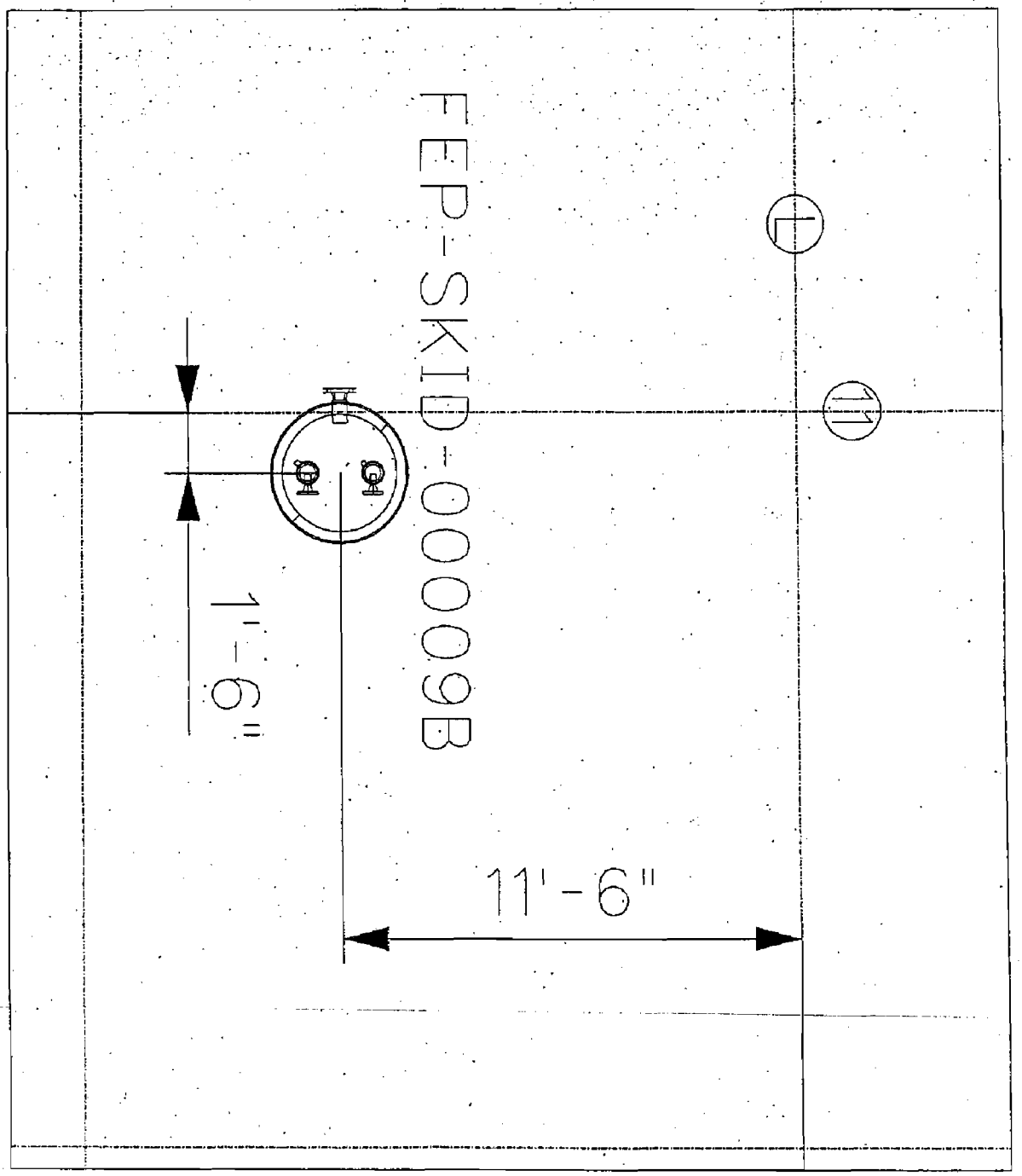

Plan View
@ 0'-0" elevation

APPENDIX L

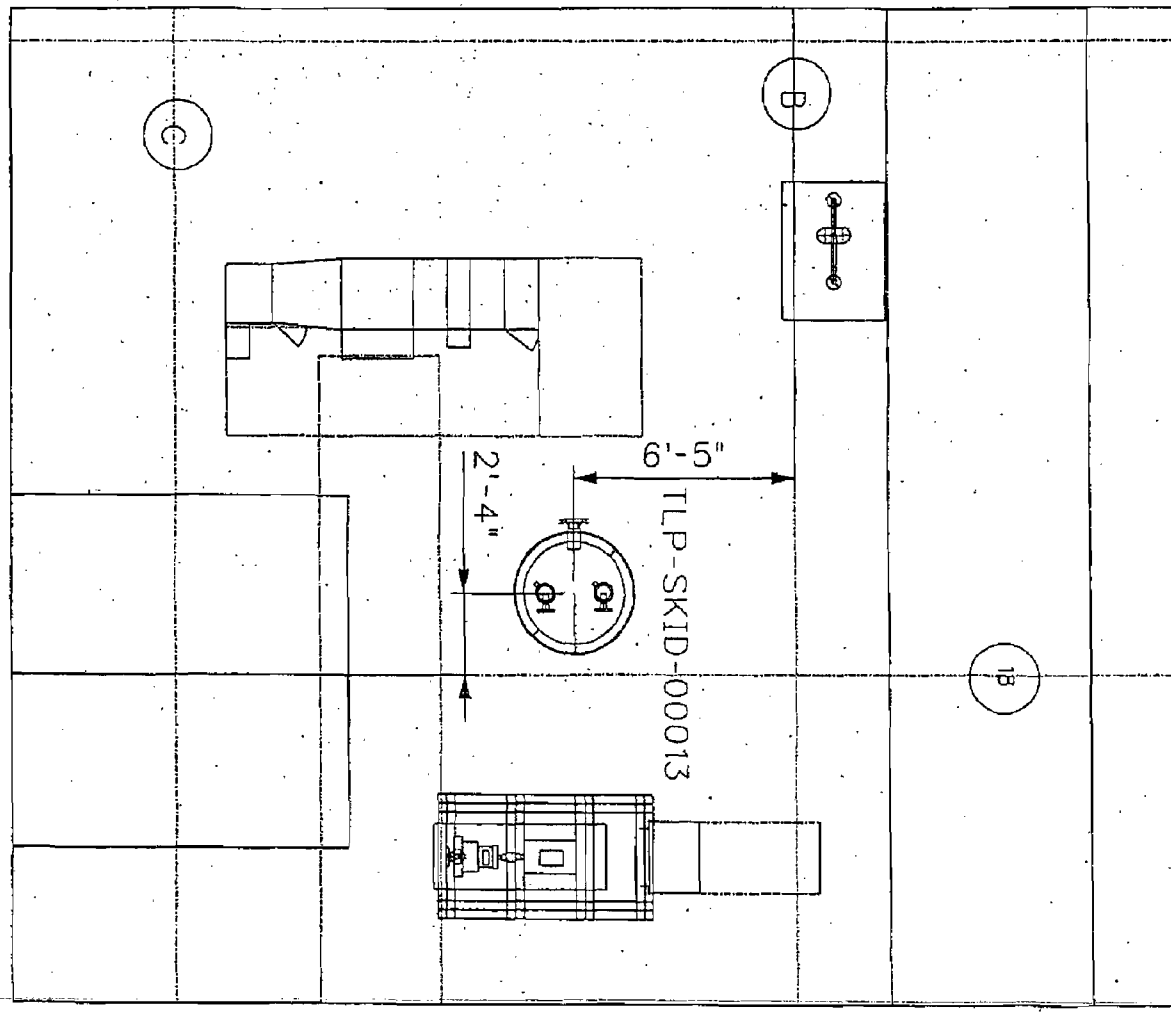

Plan View @ 0'-0" Elevation

APPENDIX M

IN-STRUCTURE ACCELERATION RESPONSE SPECTRA (ISRS) INPUT FOR SC-I/SC-II EQUIPMENT

Lateral Displacements for the Soil Sstructure Interaction (SSI) Seismic Loads

Elevation	Vessel ID	Grid Lines	E-W	N-S
0 ft	FEP-SEP-00001A	J:8-9	0.307681 in.	0.319722 in.
0 ft	FEP-SEP-00001B	J:10-10.5	0.308585 in.	0.313252 in.
56 ft	FEP-SEP-00001A	J:8-9	0.382427 in.	0.636880 in.
56 ft	FEP-SEP-00001B	J:10-10.5	0.380884 in.	0.650265 in.
0 ft	TLP-VSL-00002	B-C: 24-24.5	0.292882 in.	0.300089 in.
41 ft	TLP-VSL-00002	B-C: 24-24.5	0.371610 in.	0.554610 in.
56 ft	TLP-VSL-00002	B-C: 24-24.5	0.396210 in.	0.638780 in.
0 ft	TLP-SEP-00001	D:17.5 - 18.5	0.304947 in.	0.301389 in.
56 ft	TLP-SEP-00001	D:17.5 - 18.5	0.366472 in.	0.657869 in.

ISRS for Evaporator Equipment

Description	Location			ISRS Figure No. (See Notes below)
	Floor Elevation	Floor Thickness	Grid Lines	
FEP Antifoam System Skid	77'	1'	G-H/8-9.5	22,23,147
FEP Condenser Skid A	56'	4'	K-8	37,38,121
FEP Condenser Skid B	56'	4'	K-10	37,38,121
FEP Condensate Skid	0'	8'	M-9	64, 65, 24E
FEP Recirc Pump Skid A	0'	8'	H-8	67,68,24E
FEP Recirc Pump Skid B	0'	8'	G-9	67,68,24E
FEP Reboiler Skid A	0'	8'	G-8	67,68,24E
FEP Reboiler Skid B	0'	8'	G-8	67,68,24E
Separator Vessel (FEP-SEP-00001A)	0'	8'	J-8	67,68,24E
Separator Vessel (FEP-SEP-00001B)	0'	8'	J-10	67,68,24E
TLP Condenser Skid	56'	3'	D-E/19.5	40,41,115
TLP Recirc Pump Skid	0'	8'	F-18	67,68,24E
TLP Feed Pump Skid	0'	8'	B-C/20	70,71,24E
TLP Concentrate Pump Skid	0'	8'	B-C/19	70,71,24E
TLP Reboiler Skid	0'	8'	F-17	67,68,24E
Separator Vessel (TLP-SEP-00001)	0'	8'	D-18	67,68,24E
TLP Condensate Skid	0'	8'	C-25	70,71,24E

The skids are assumed rigid, i.e., the fundamental frequency in all directions is equal to or greater than 33 Hz.

RPP-WTP Pretreatment Facility ISRS

Calc No.: 24590-PTF-S0C-S15T-00005, Rev. 0A

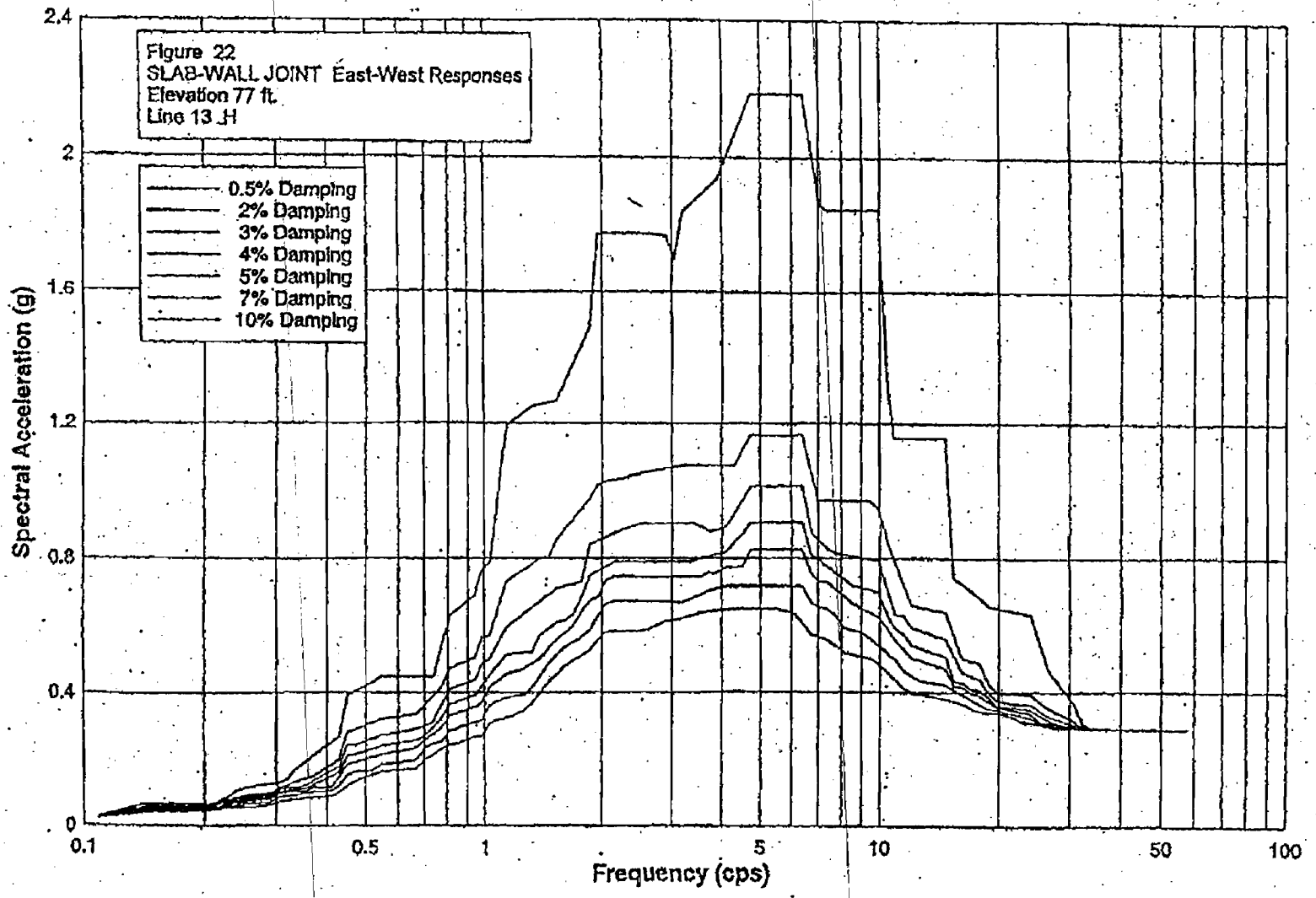

RPP-WTP Pretreatment Facility ISRS

Calc No.: 24590-PTF-S0C-S15T-00005, Rev. 0A

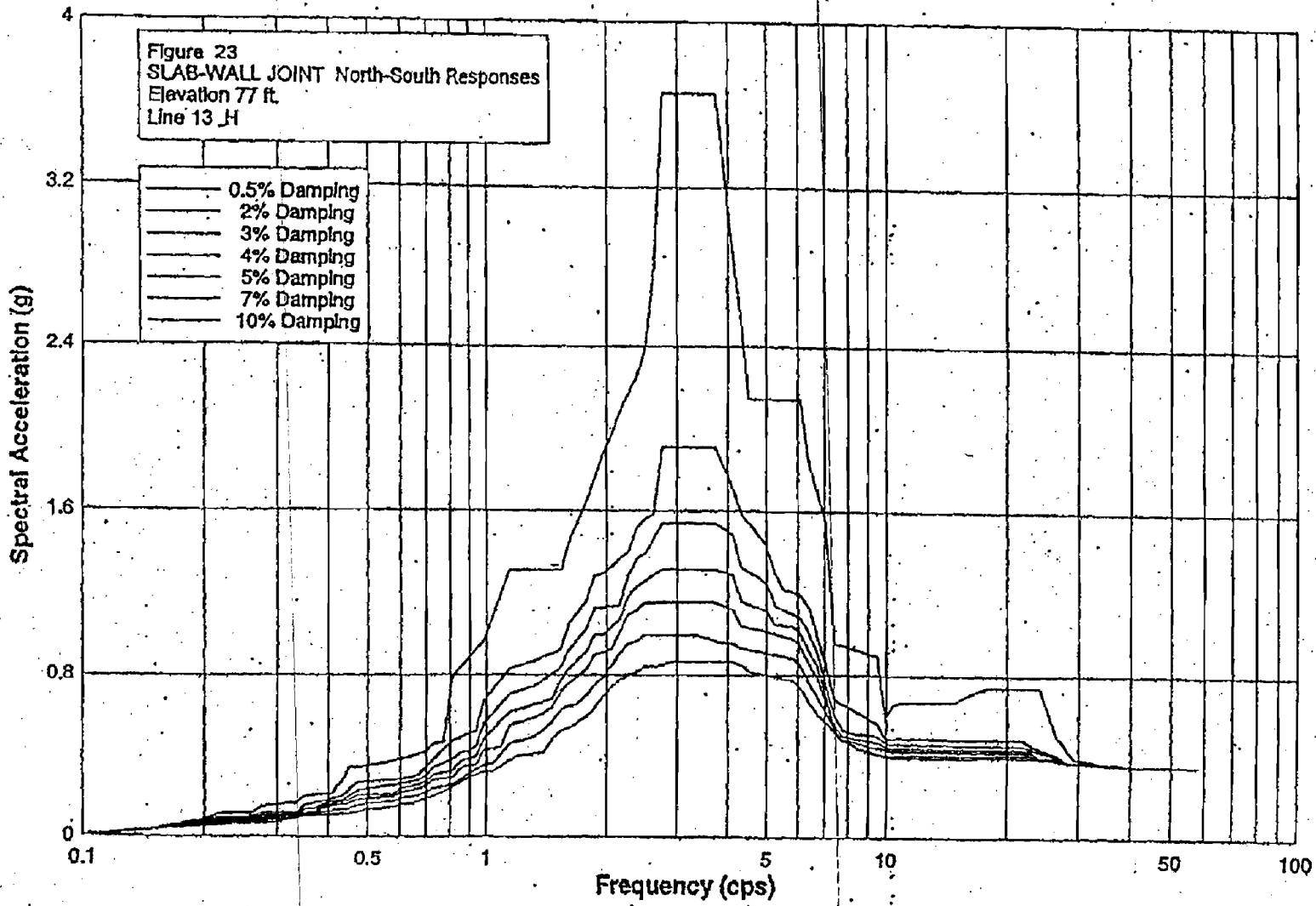

RPP-WTP Pretreatment Facility ISRS

Calc No.: 24590-PTF-S0C-S15T-00005, Rev. 0A

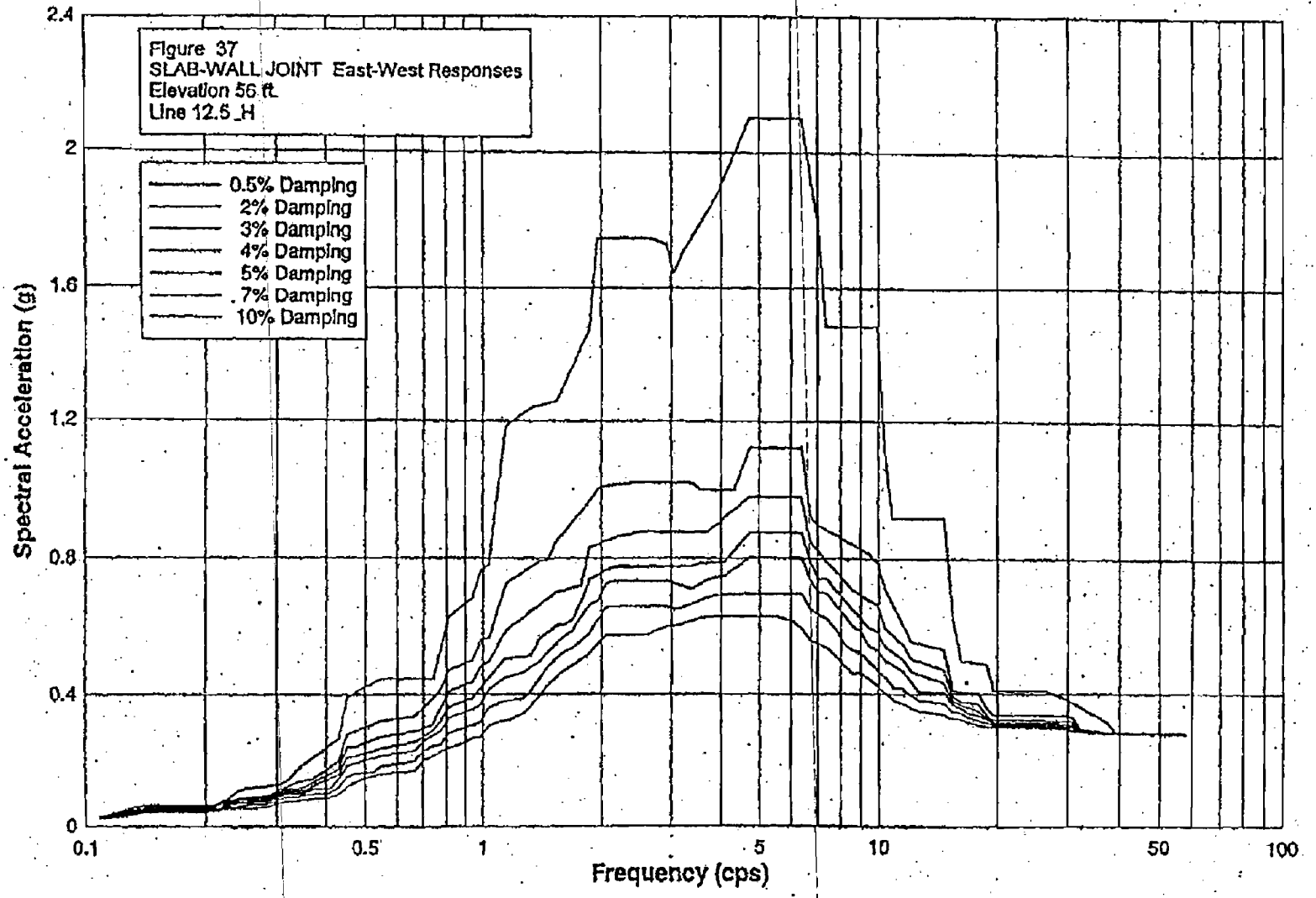

RPP-WTP Pretreatment Facility ISRS

Calc No.: 24590-PTF-S0C-S15T-00005, Rev. 0A

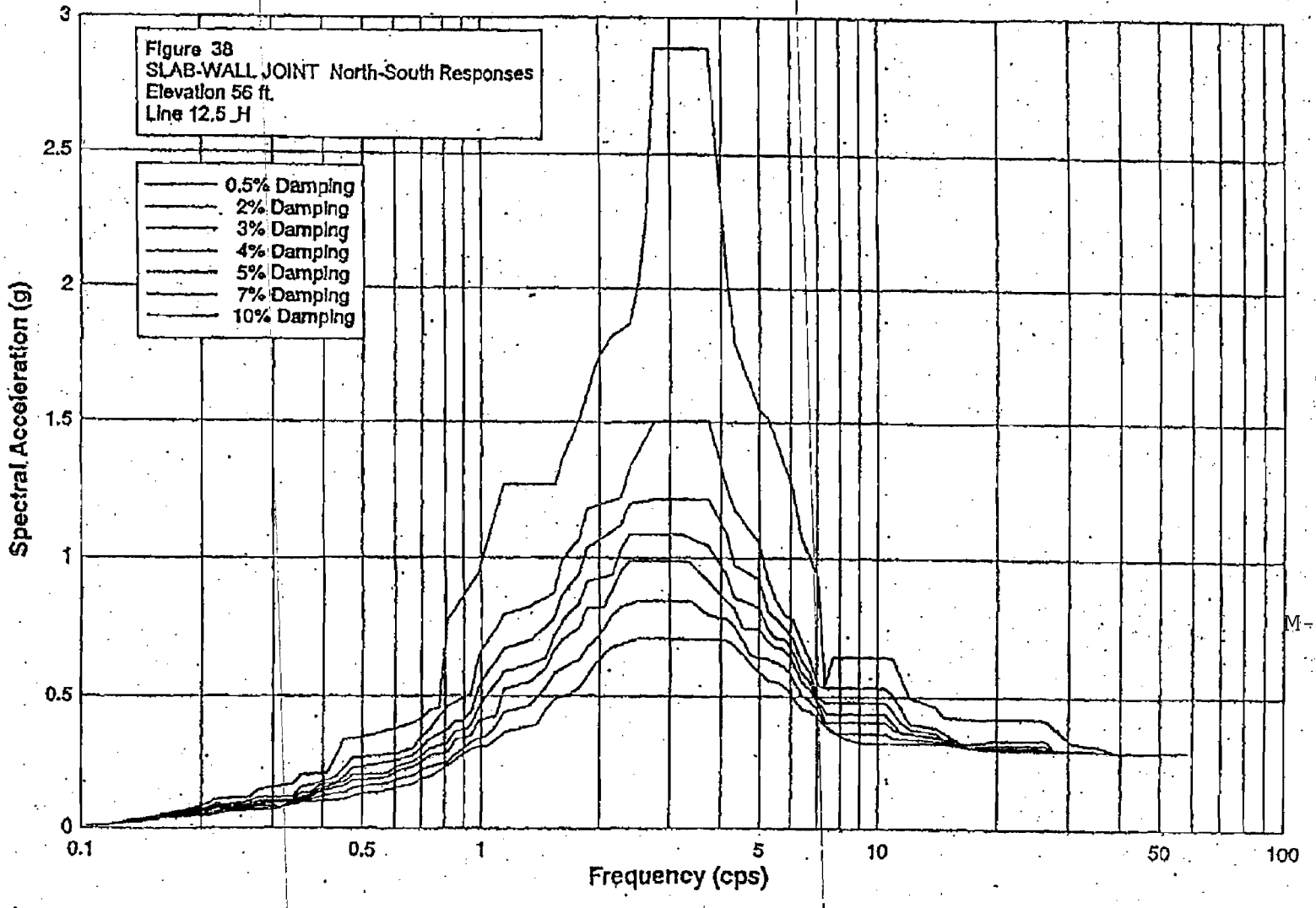

M-7

RPP-WTP Pretreatment Facility ISRS

Calc No.: 24590-PTF-S0C-S15T-00005, Rev. 0A

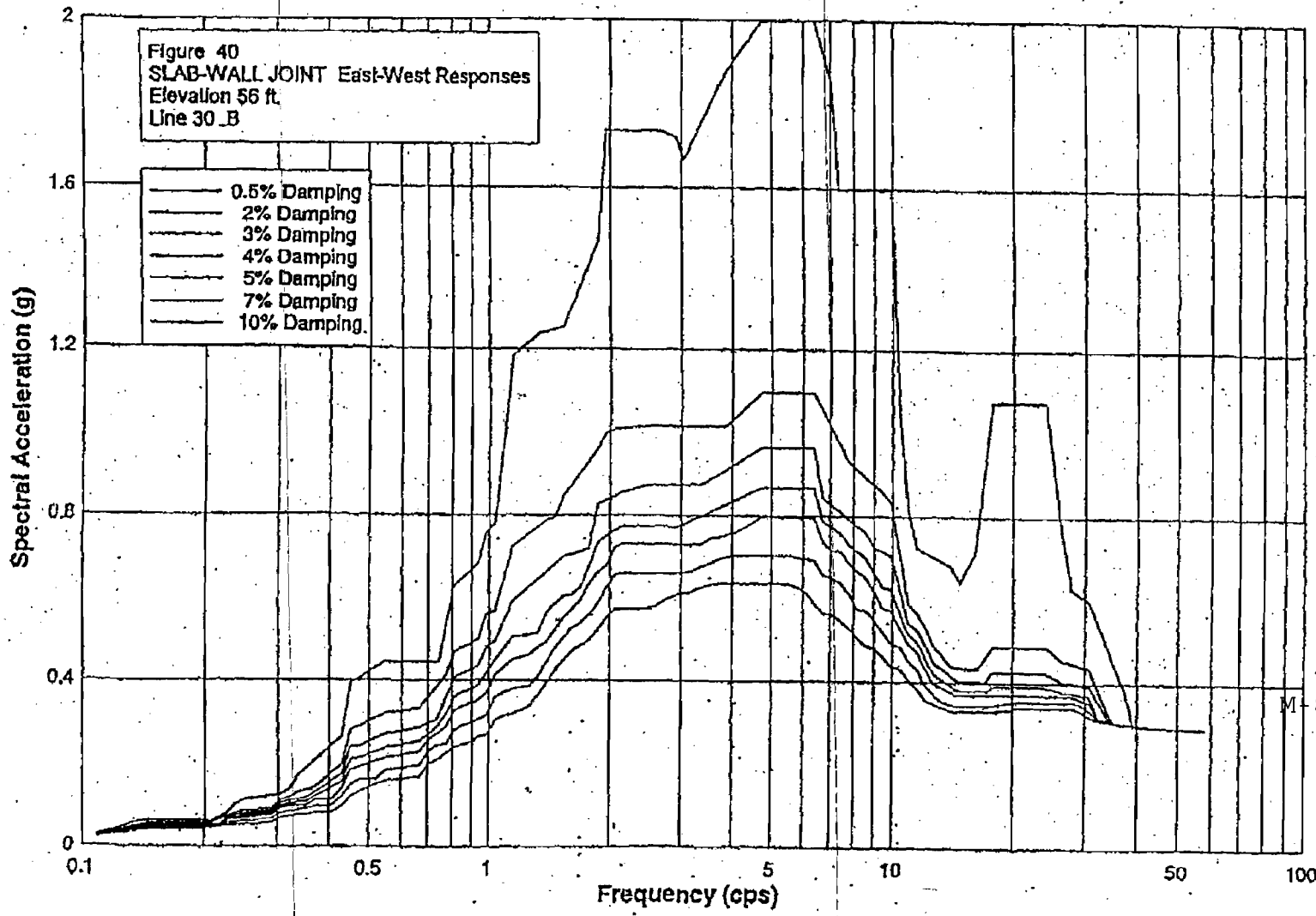

RPP-WTP Pretreatment Facility ISRS

Calc No.: 24590-PTF-S0C-S15T-00005, Rev. 0A

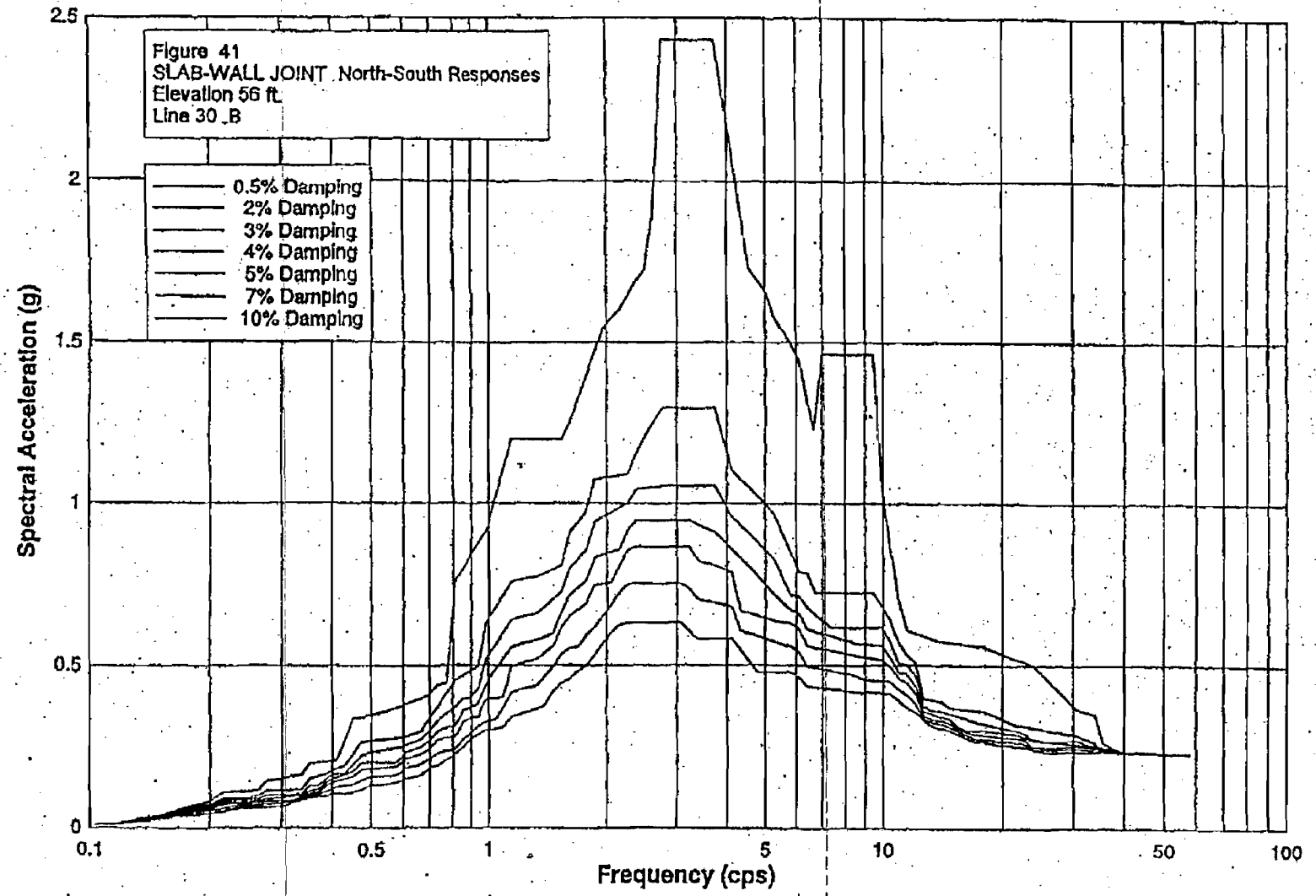

RPP-WTP Pretreatment Facility ISRS

Calc No.: 24590-PTF-S0C-S15T-00005, Rev. 0A

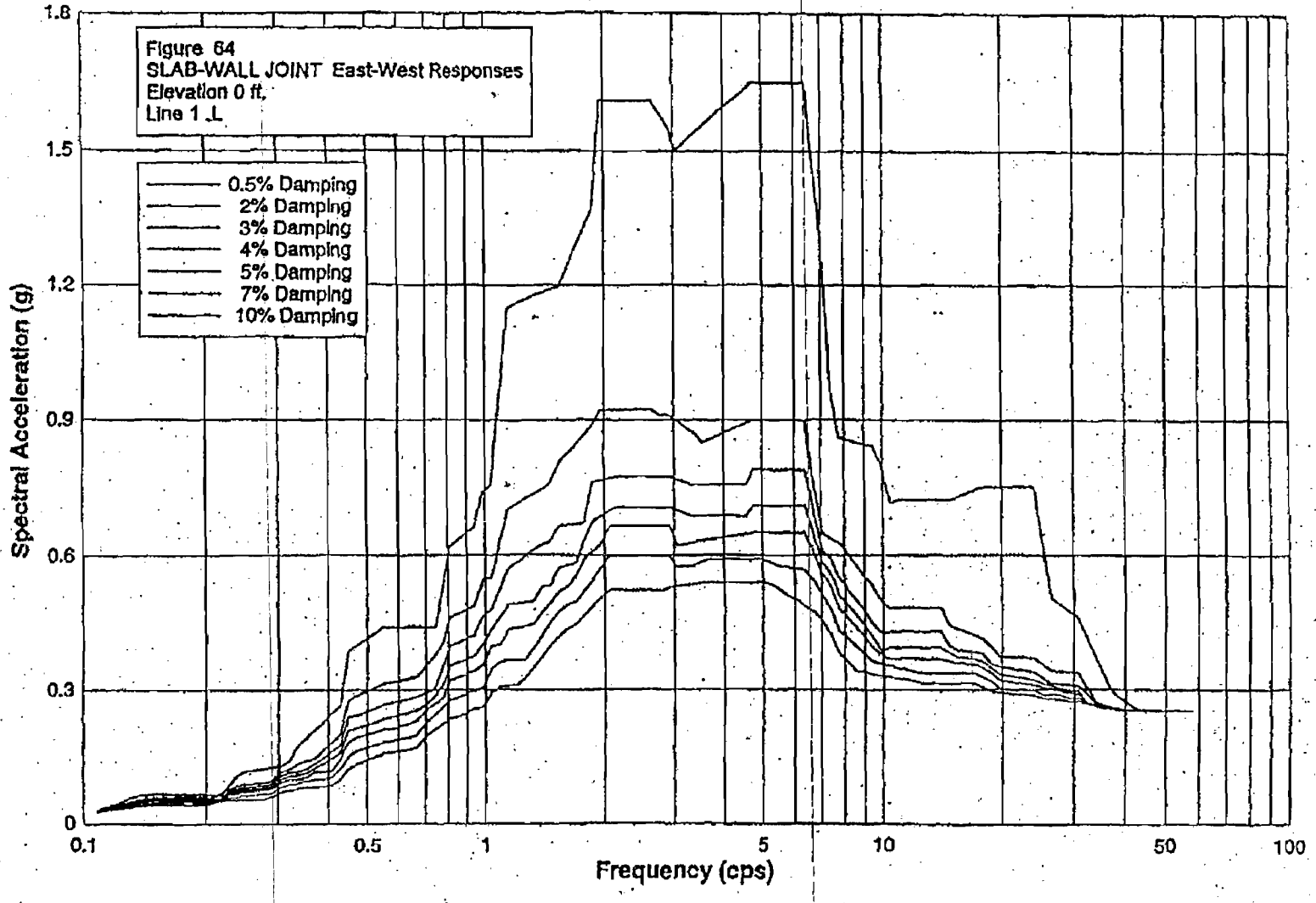

RPP-WTP Pretreatment Facility ISRS

Calc No.: 24590-PTF-S0C-S15T-00005, Rev. 0A

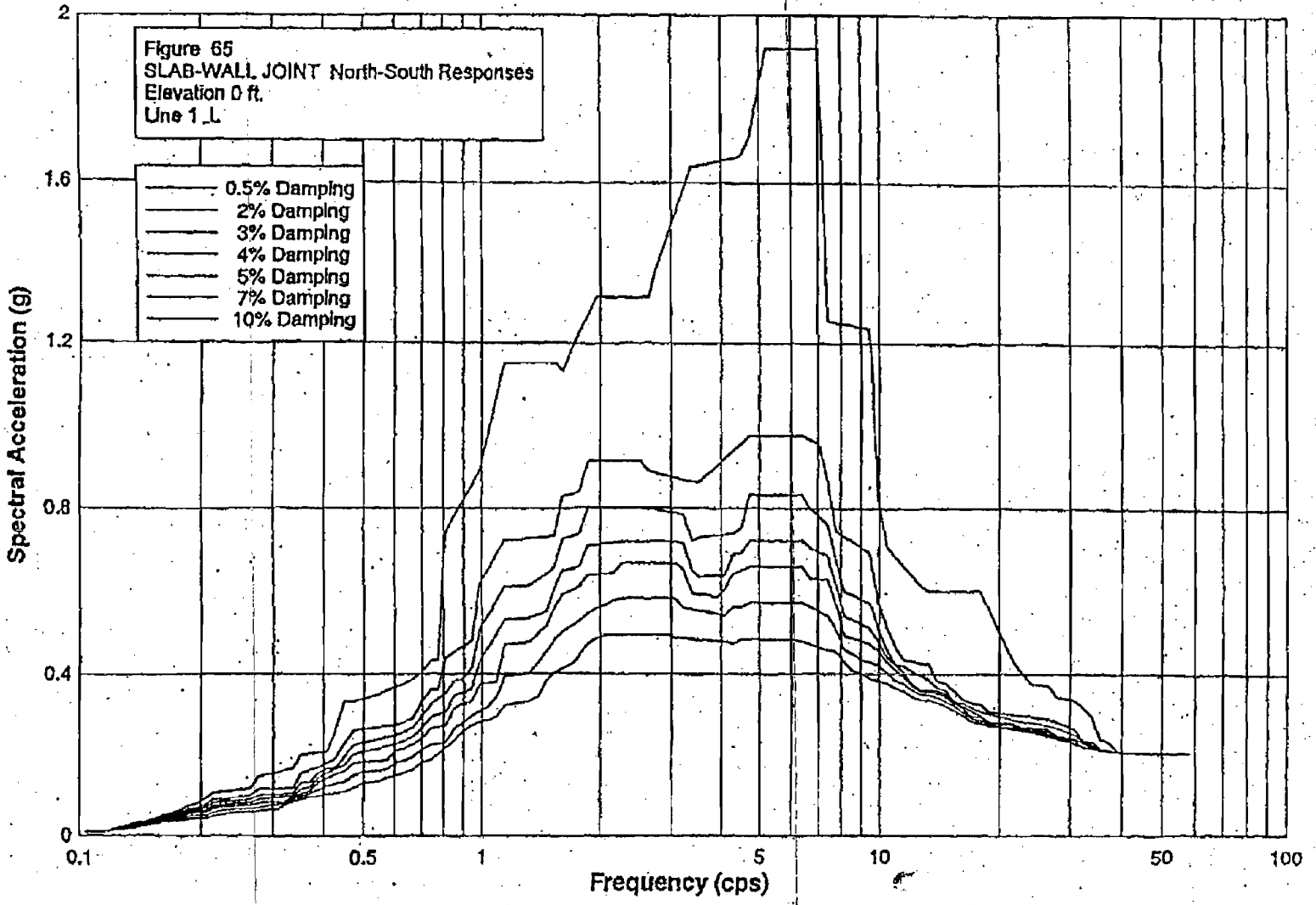

RPP-WTP Pretreatment Facility ISRS

Calc No.: 24590-PTF-S0C-S15T-00005, Rev. 0A

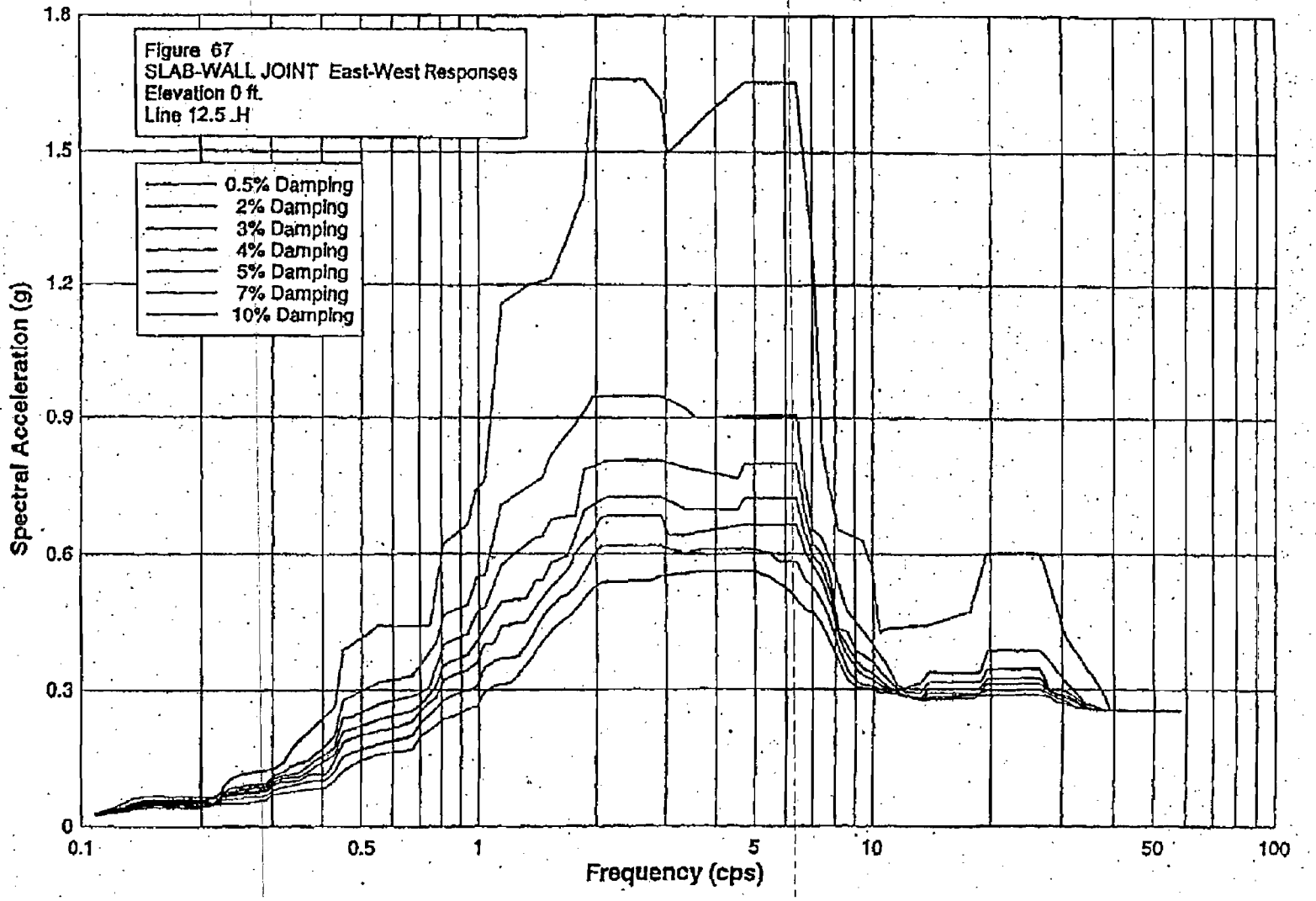

RPP-WTP Pretreatment Facility ISRS

Calc No.: 24590-PTF-S0C-S15T-00005, Rev. 0A

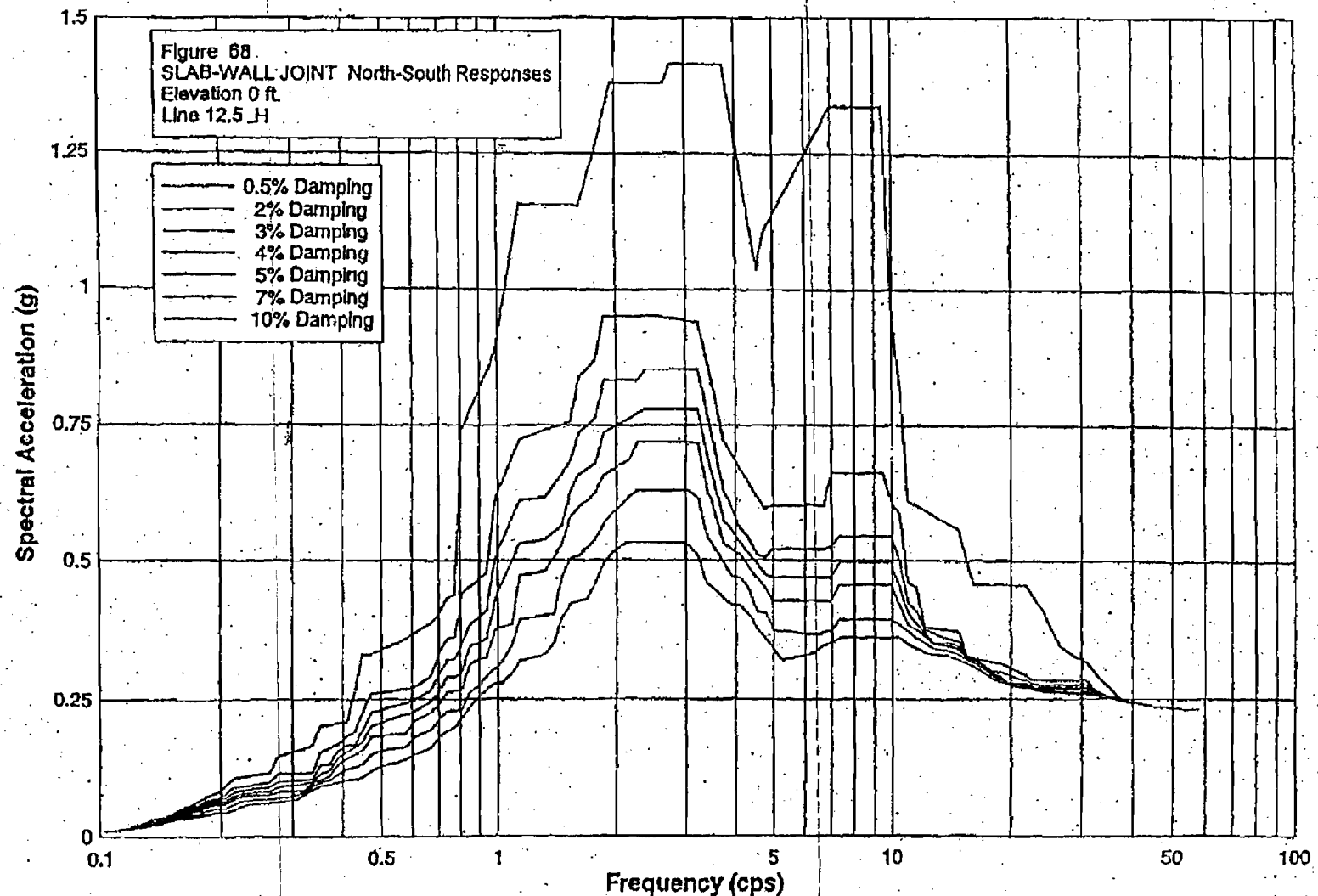

RPP-WTP Pretreatment Facility ISRS

Calc No.: 24590-PTF-S0C-S15T-00005, Rev. 0A

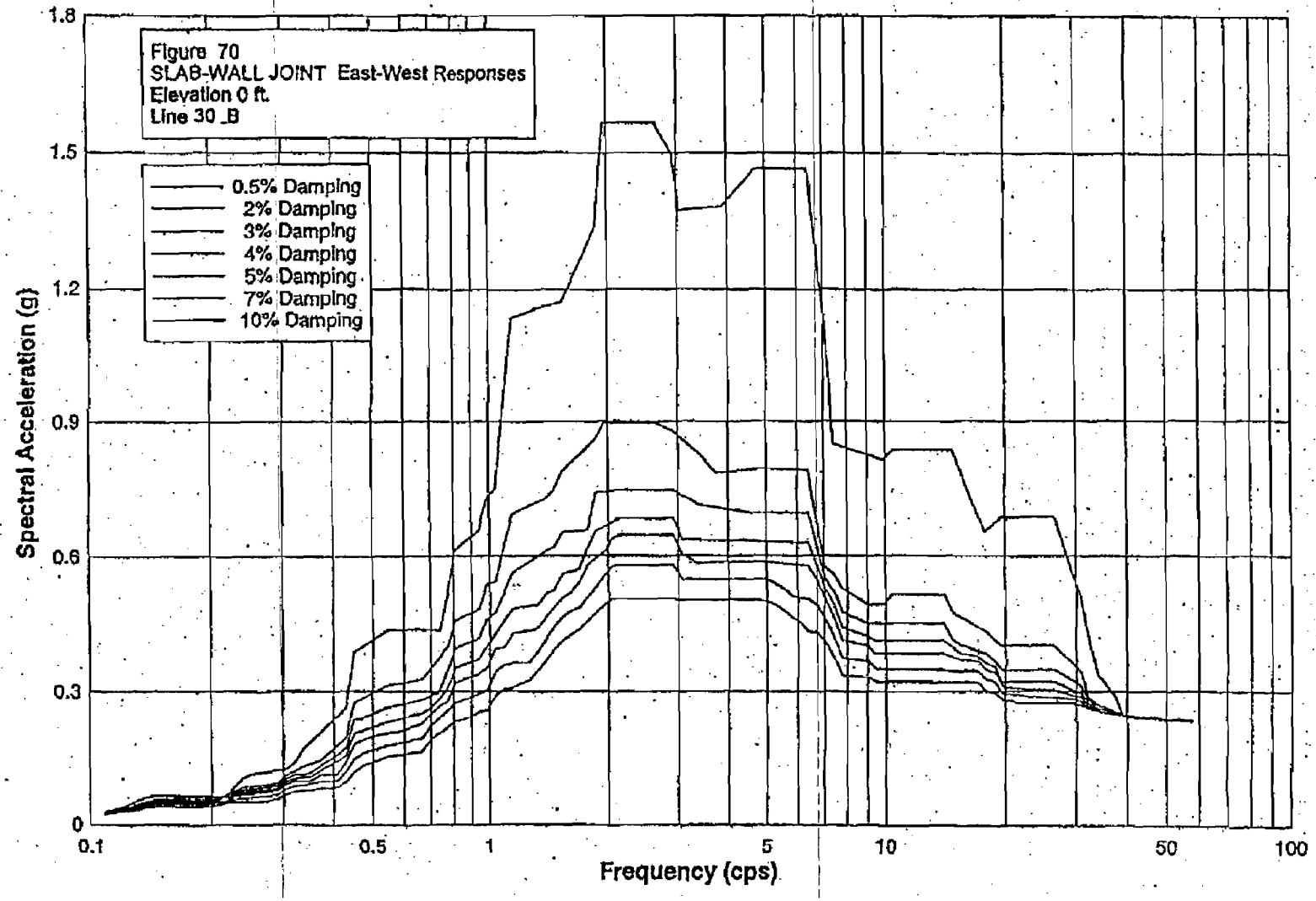

RPP-WTP Pretreatment Facility ISRS

Calc No.: 24590-PTF-S0C-S15T-00005, Rev. 0A

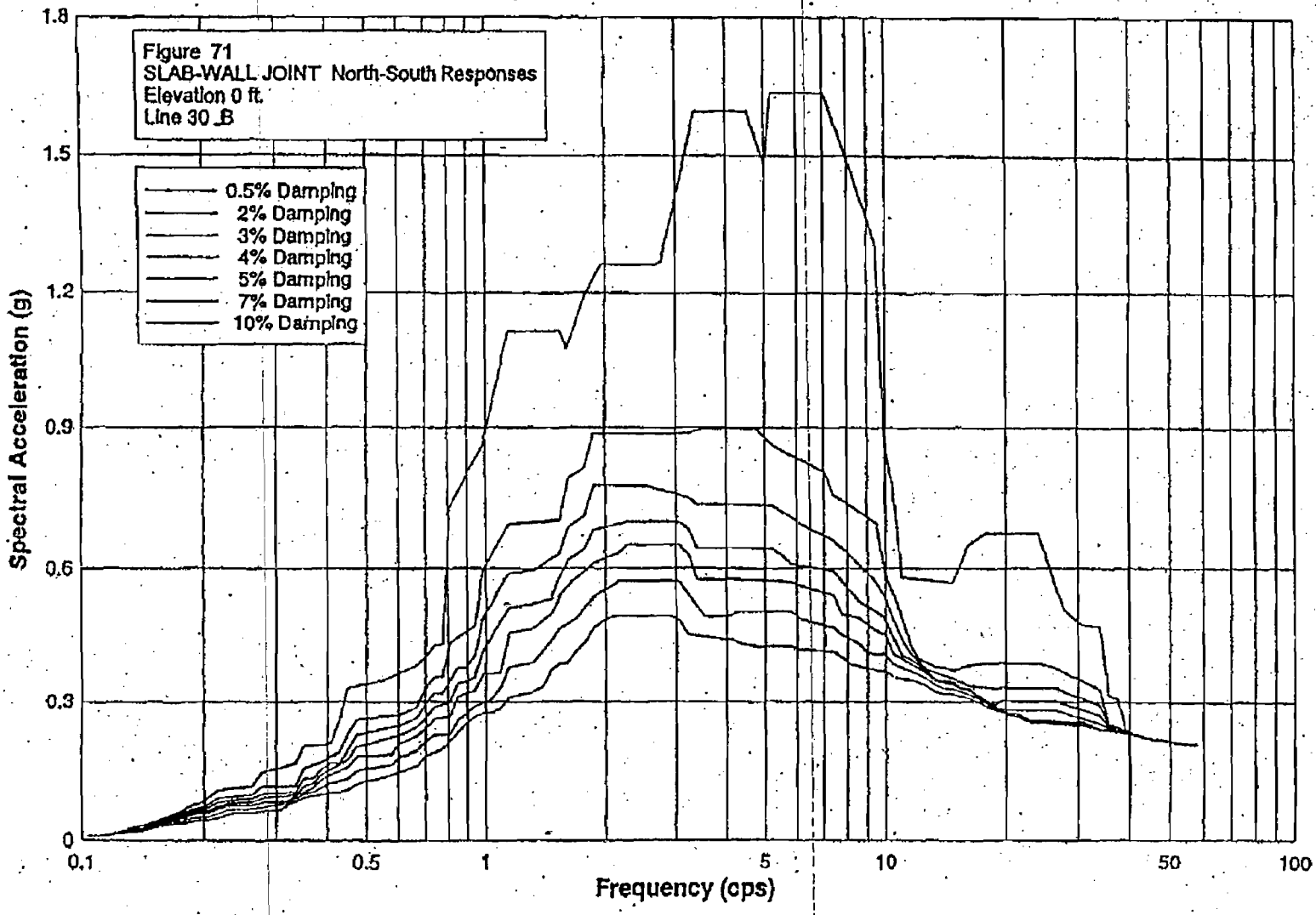

RPP-WTP Pretreatment Facility ISRS

Calc No.: 24590-PTF-S0C-S15T-00005, Rev. 0A

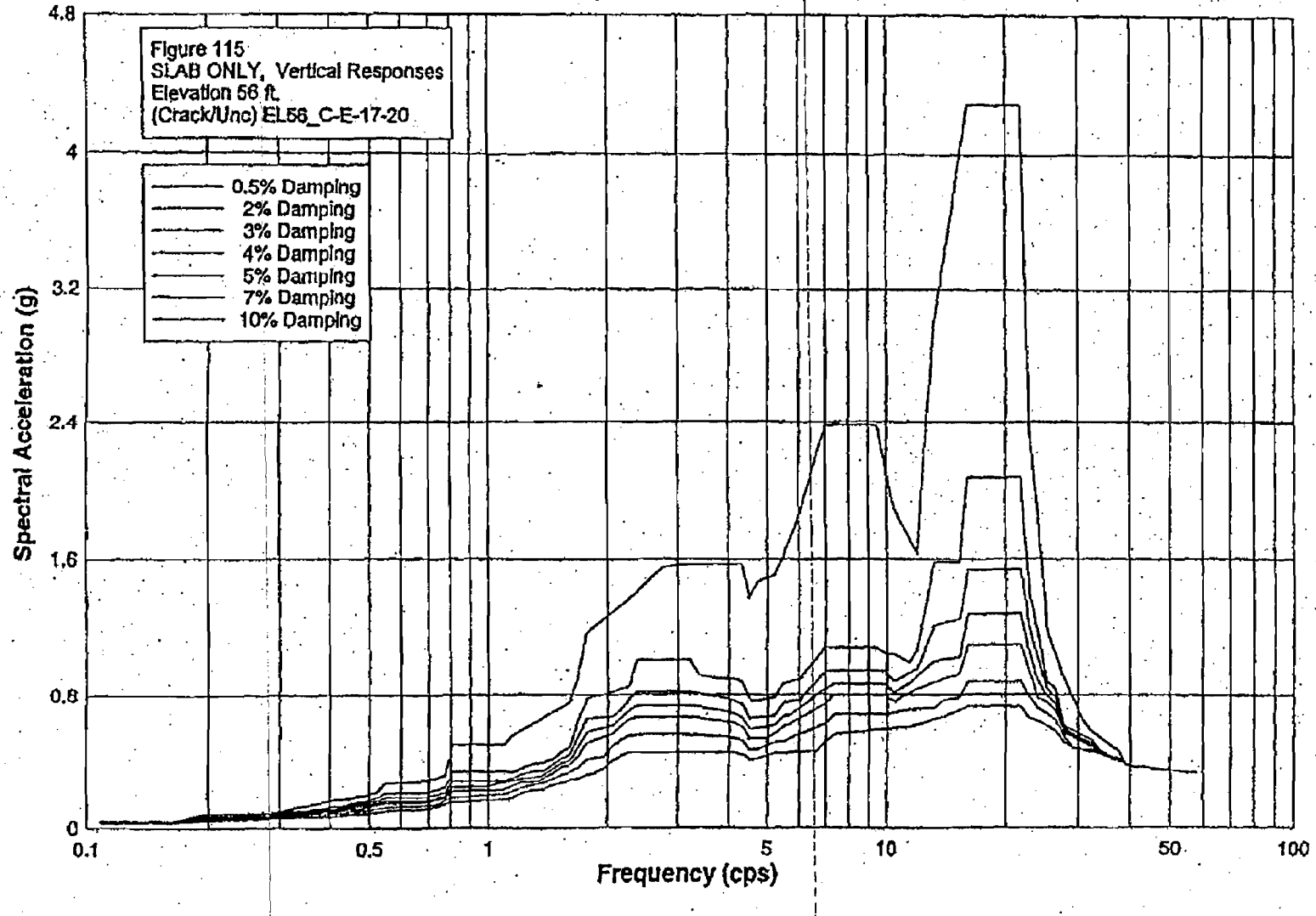

RPP-WTP Pretreatment Facility ISRS

Calc No.: 24590-PTF-S0C-S15T-00005, Rev. 0A

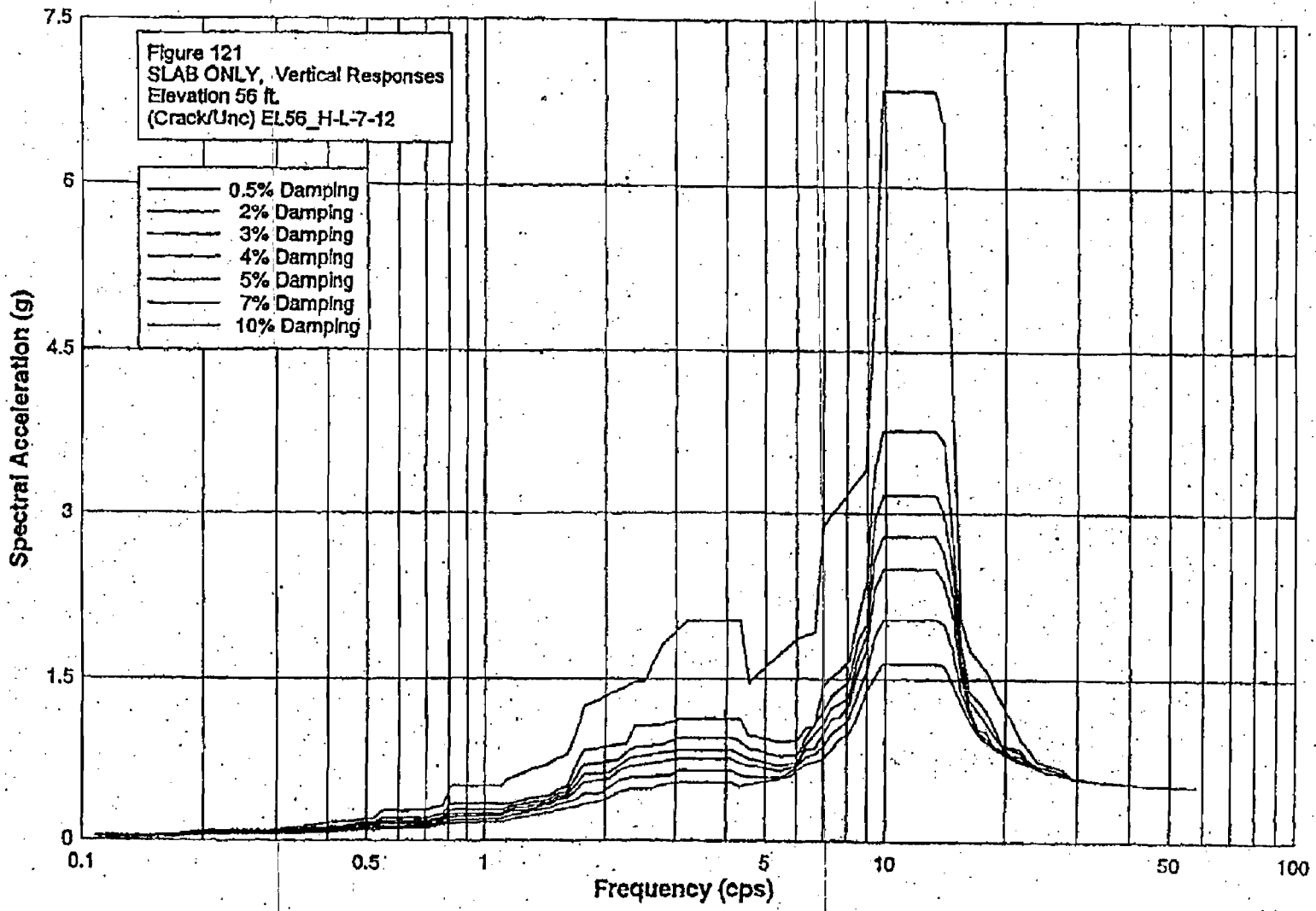

RPP-WTP Pretreatment Facility ISRS

Calc No.: 24590-PTF-S0C-S15T-00005, Rev. 0A

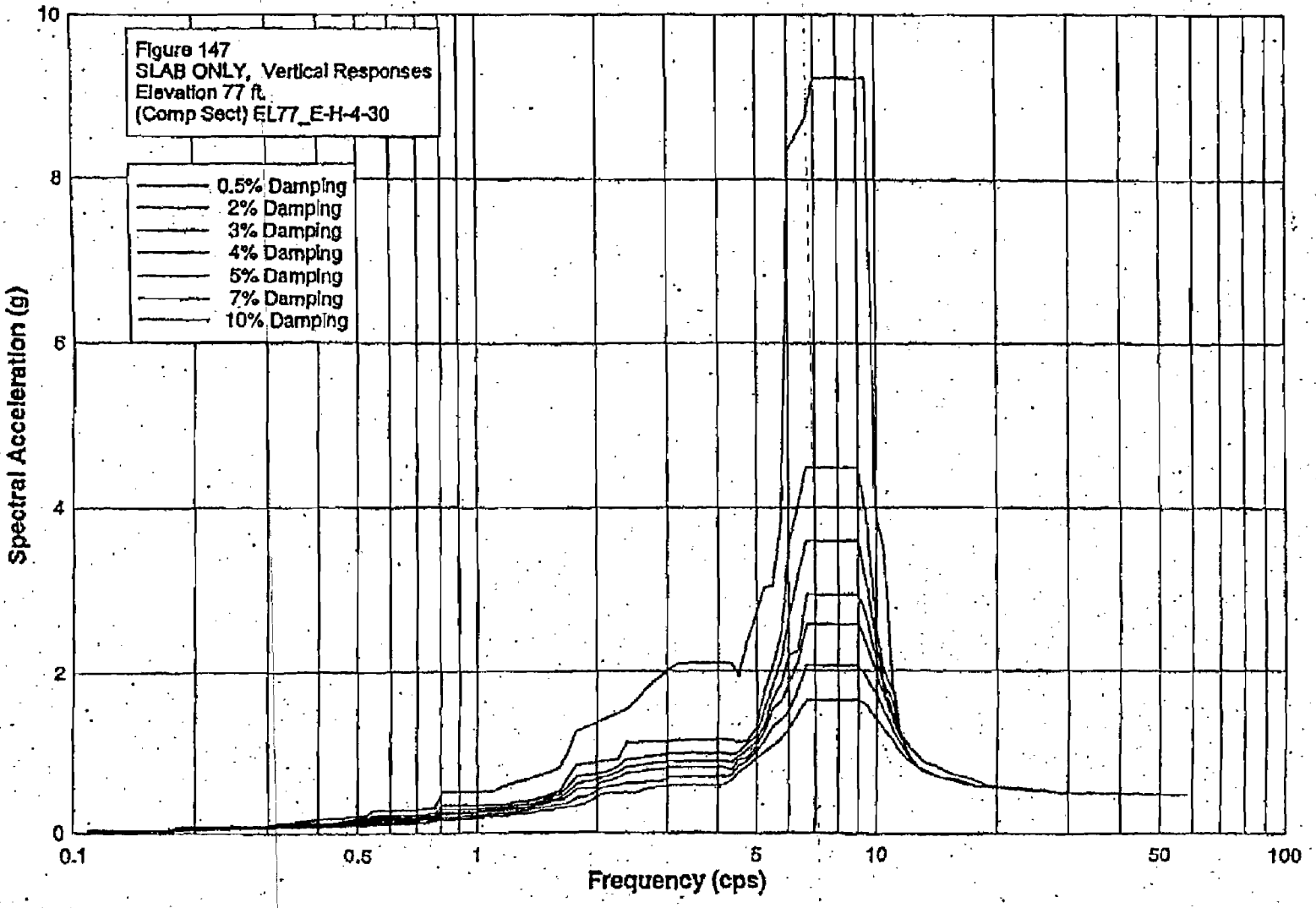

RPP-WTP Pretreatment Facility ISRS

Calc No.: 24590-PTF-S0C-S15T-00005, Rev. 0A

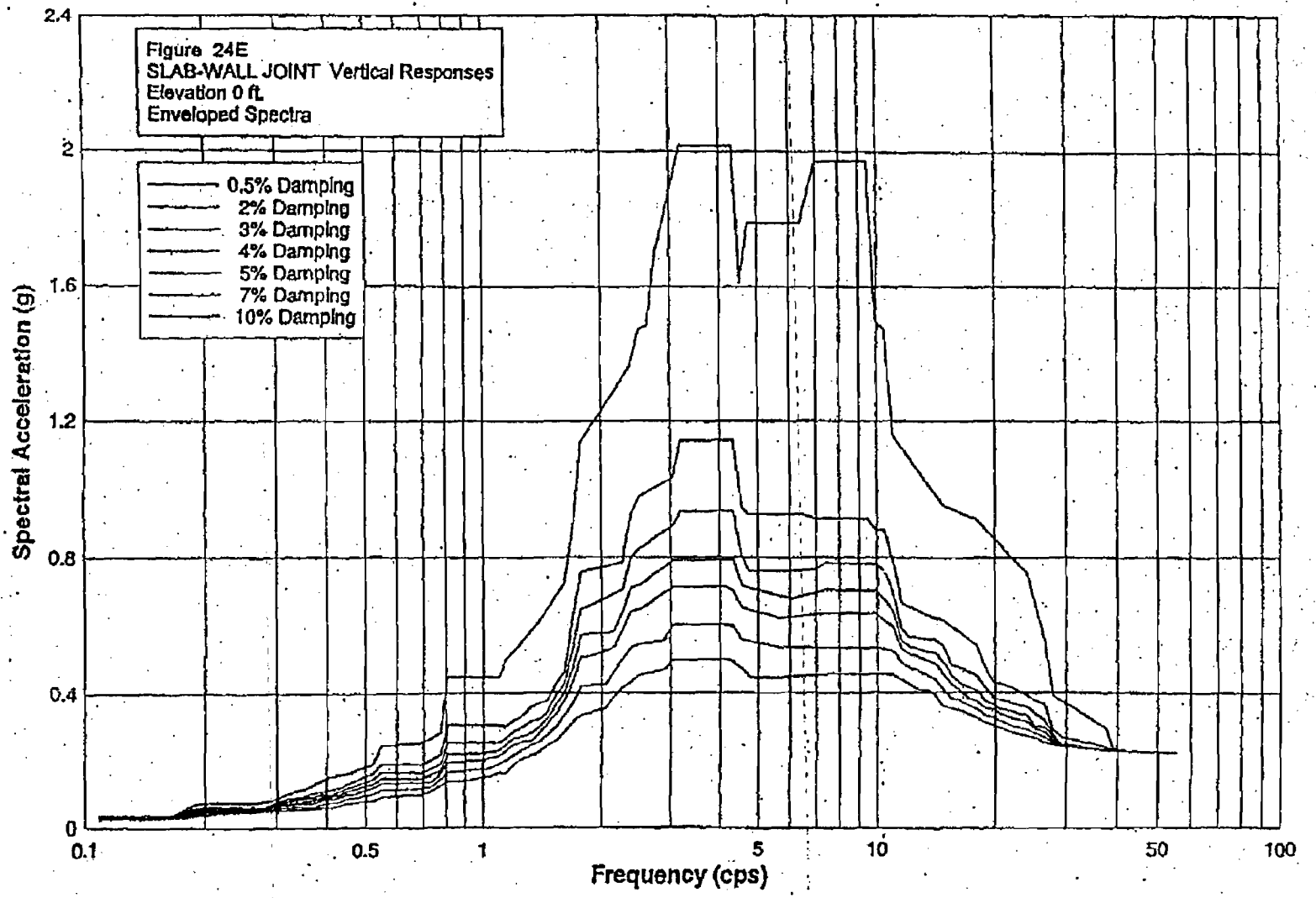

RPP-WTP Pretreatment Facility ISRS

Calc No.: 24590-PTF-S0C-S15T-00005, Rev. 0A

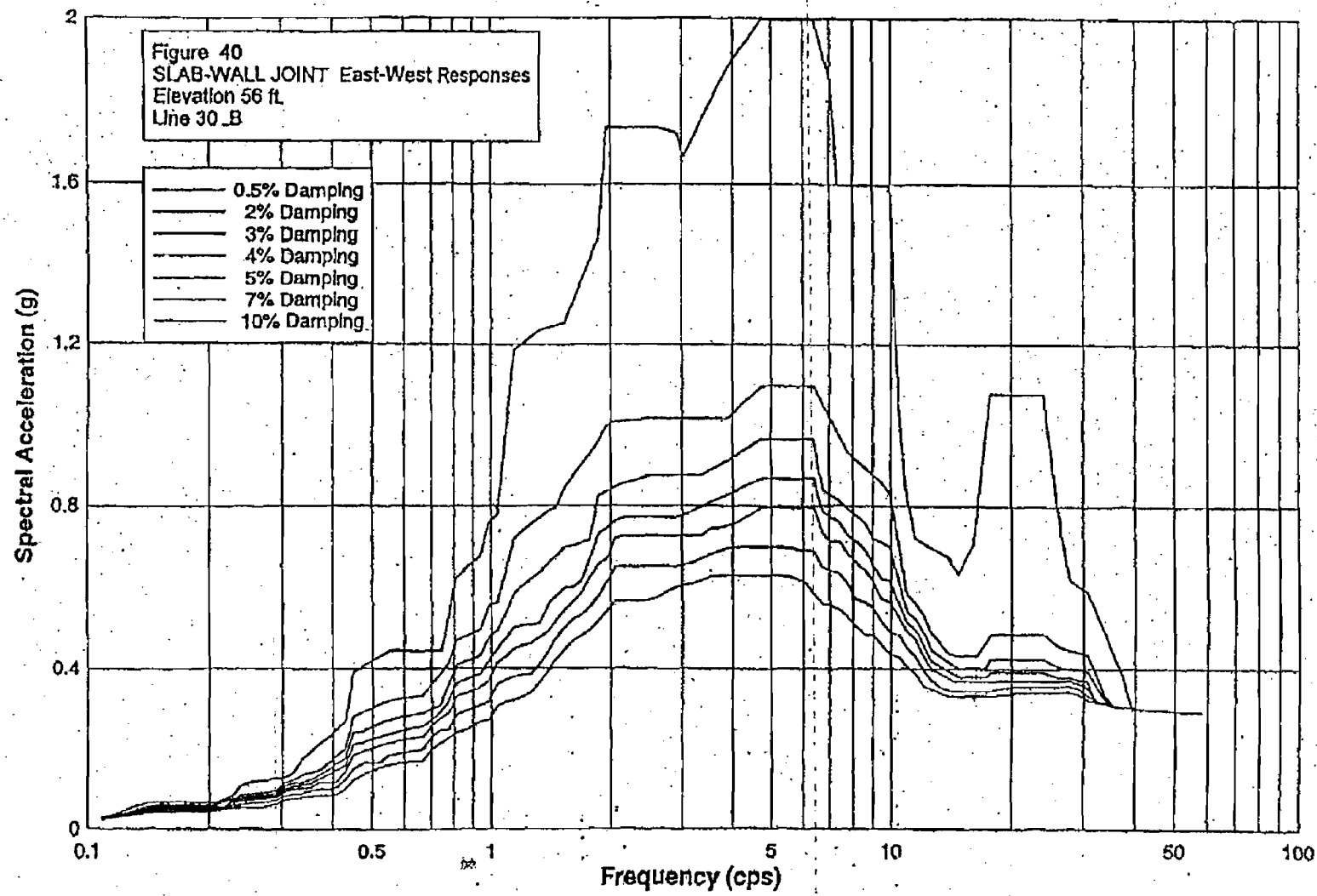

RPP-WTP Pretreatment Facility ISRS

Calc No.: 24590-PTF-S0C-S15T-00005, Rev. 0A

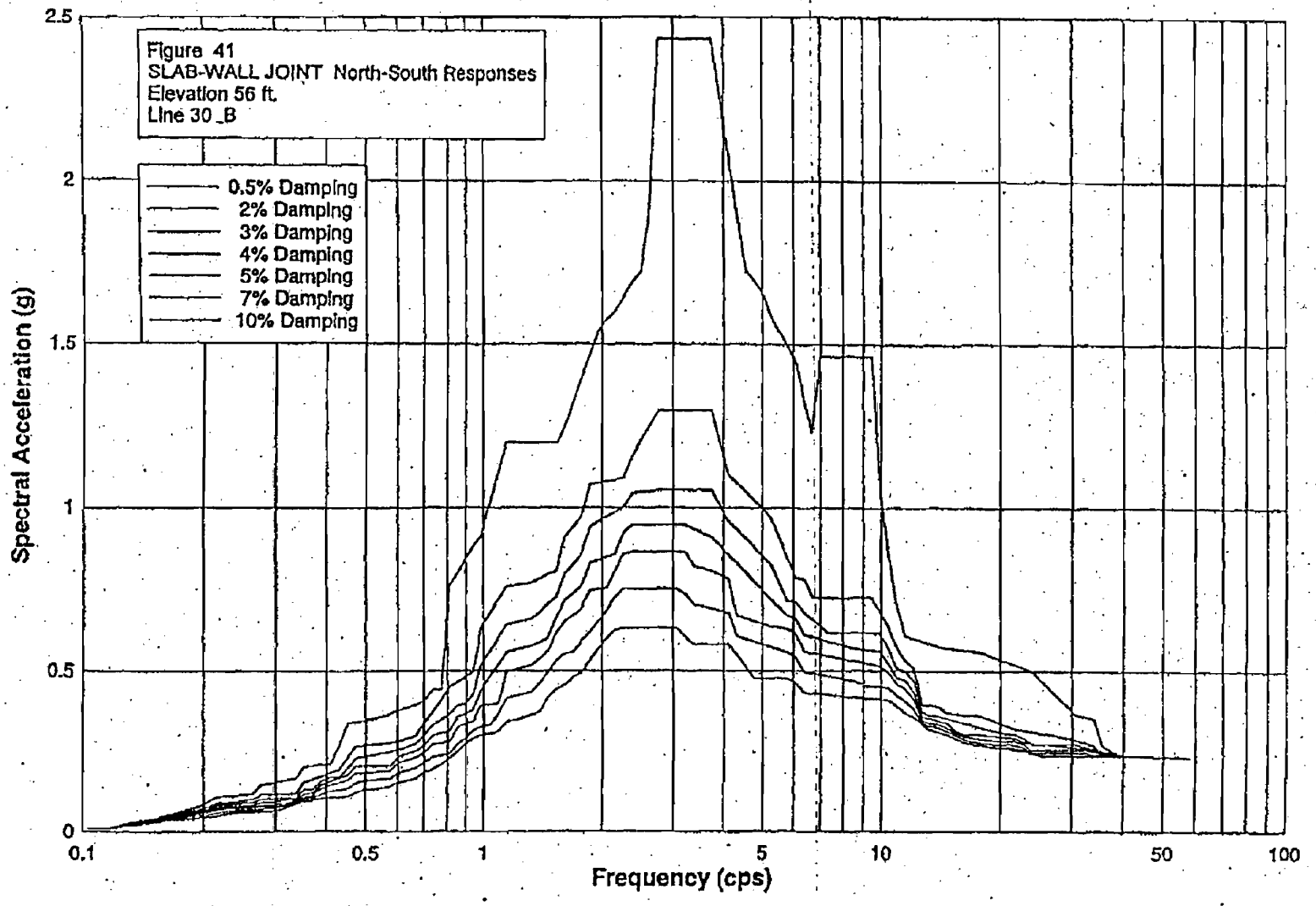

RPP-WTP Pretreatment Facility ISRS

Calc No.: 24590-PTF-S0C-S15T-00005, Rev. 0A

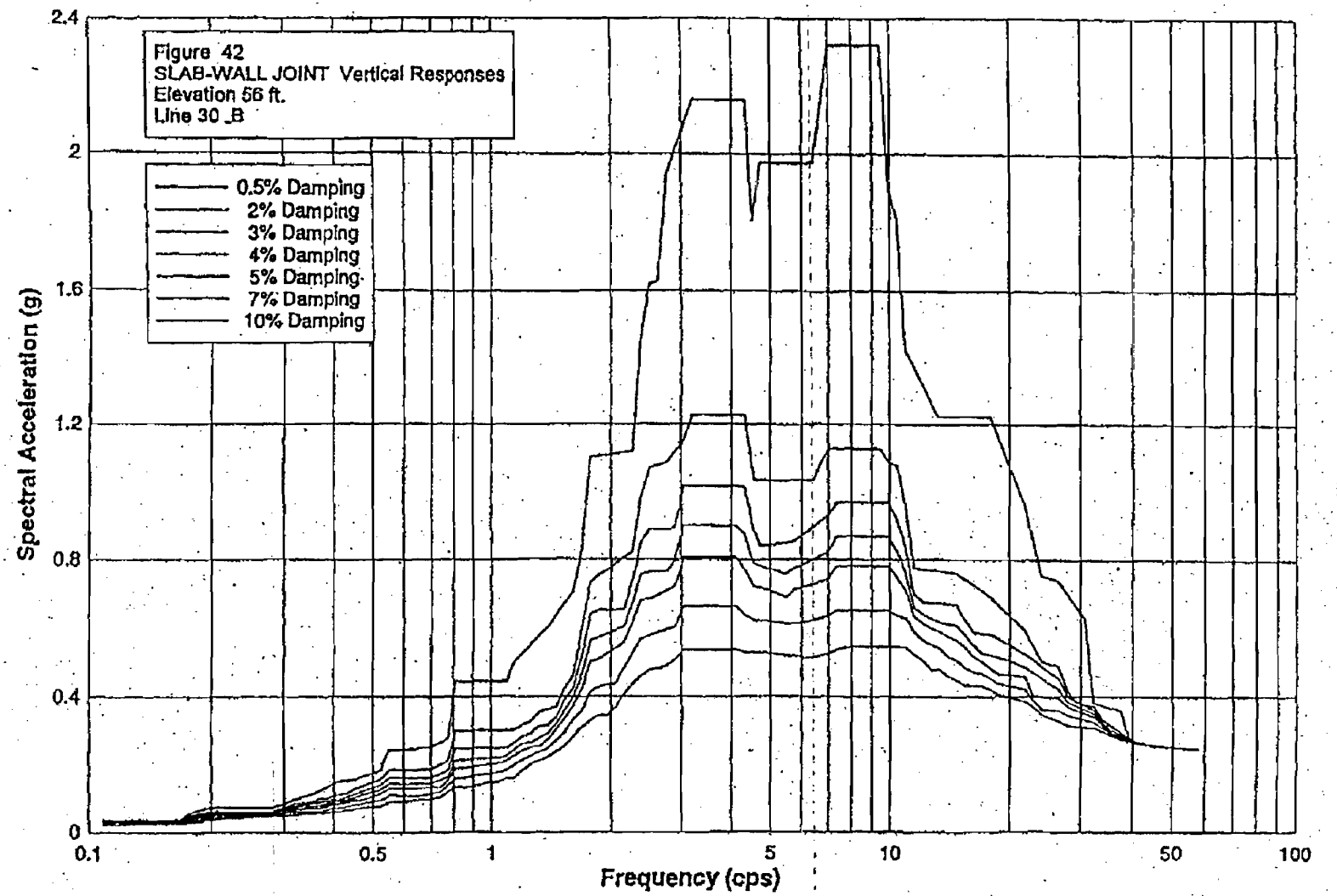

RPP-WTP Pretreatment Facility ISRS

Calc No.: 24590-PTF-S0C-S15T-00005, Rev. 0A

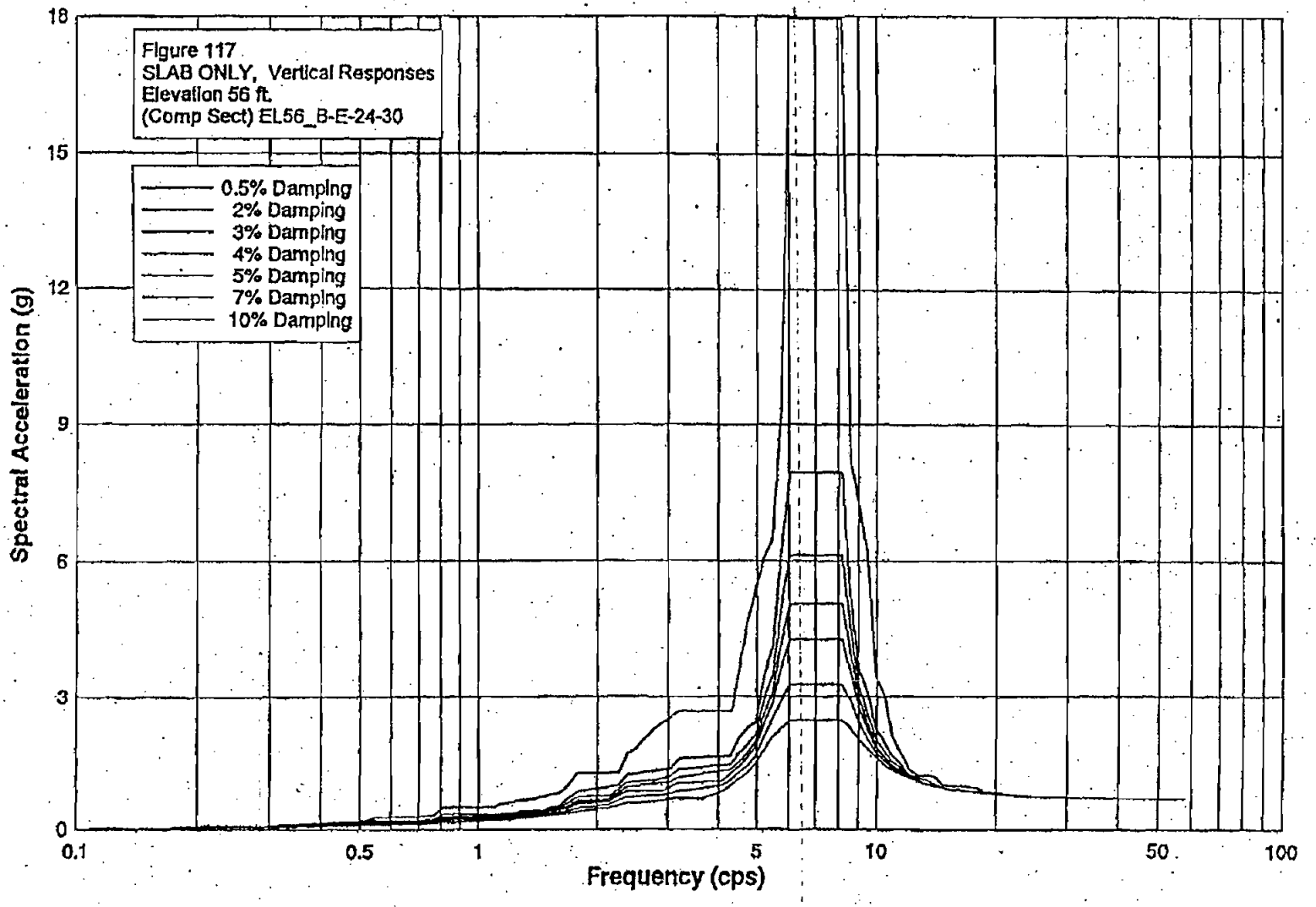

RPP-WTP Pretreatment Facility ISRS

Calc No.: 24590-PTF-S0C-S15T-00005, Rev: 0A

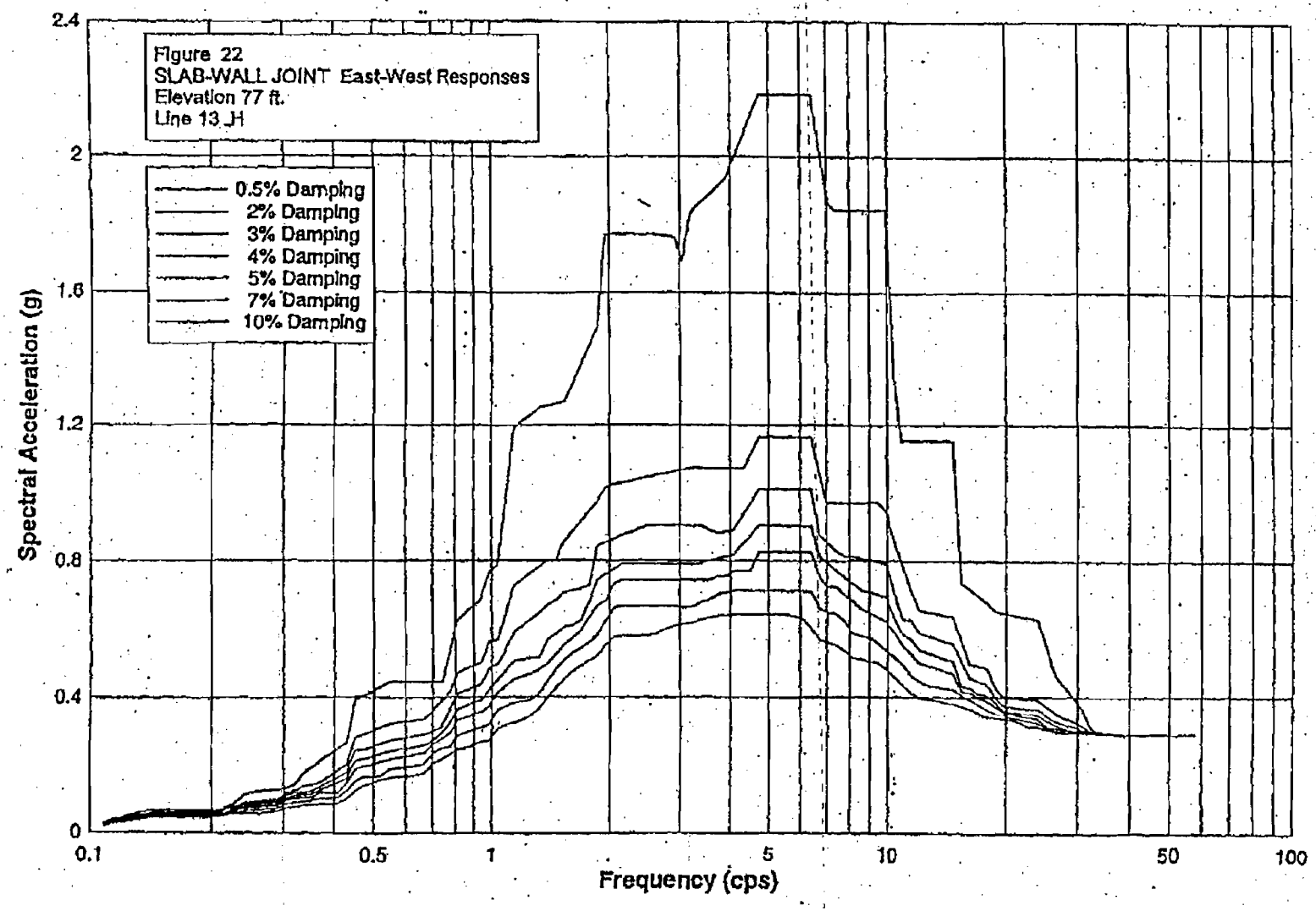

RPP-WTP Pretreatment Facility ISRS

Calc No.: 24590-PTF-S0C-S15T-00005, Rev. 0A

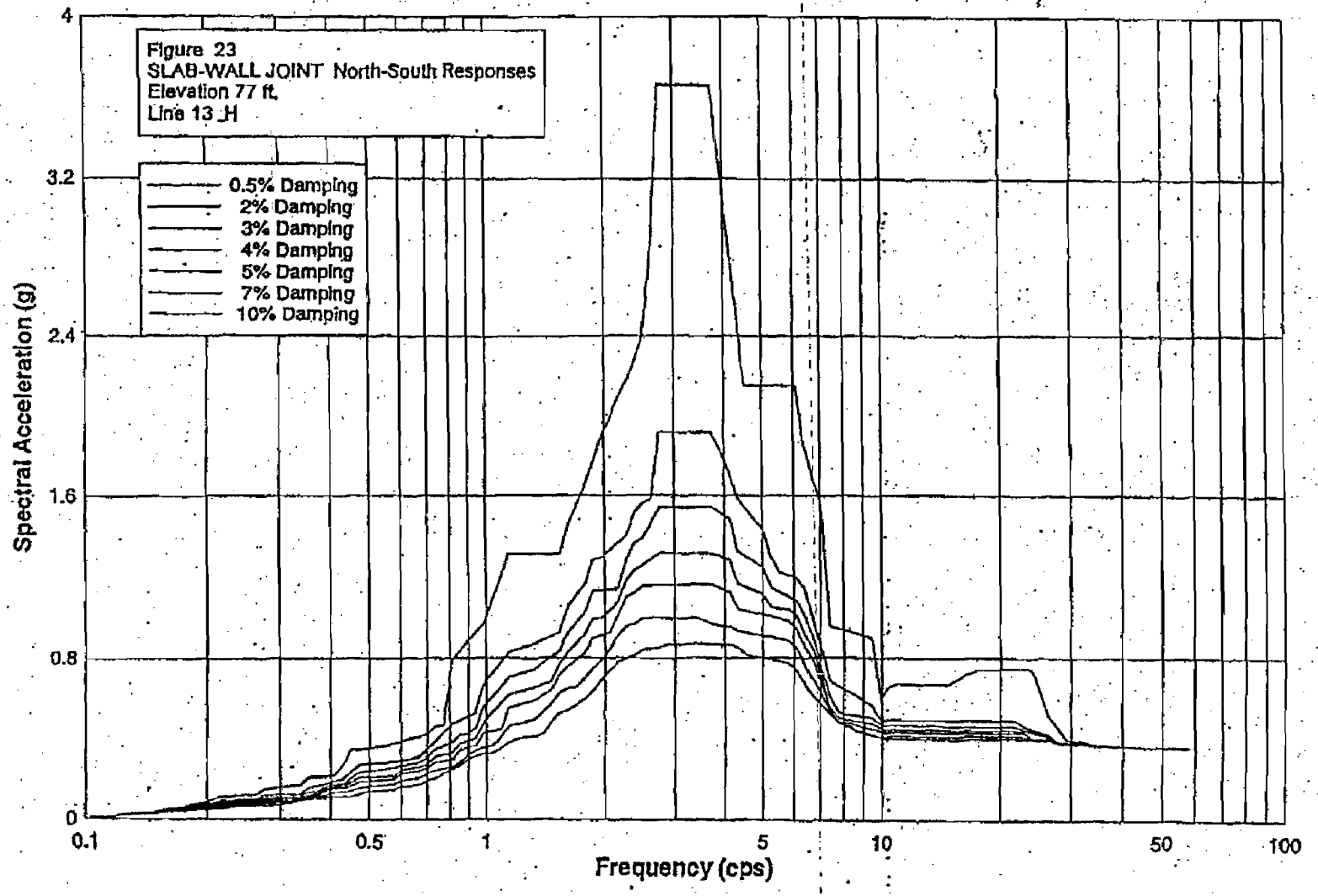

M-

RPP-WTP Pretreatment Facility ISRS

Calc No.: 24590-PTF-S0C-S15T-00005, Rev. 0A

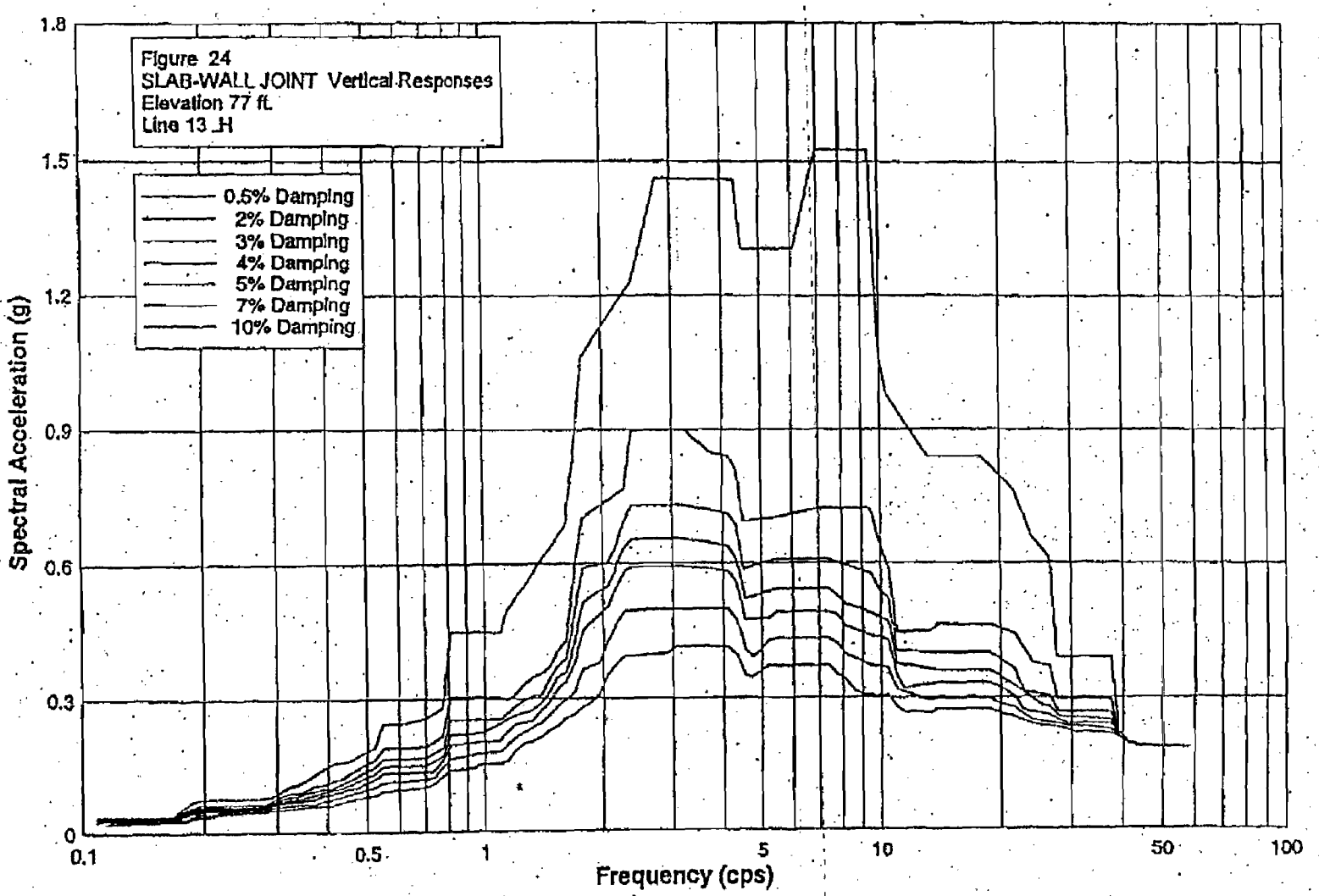

RPP-WTP Pretreatment Facility ISRS

Calc No.: 24590-PTF-S0C-S15T-00005, Rev. 0A

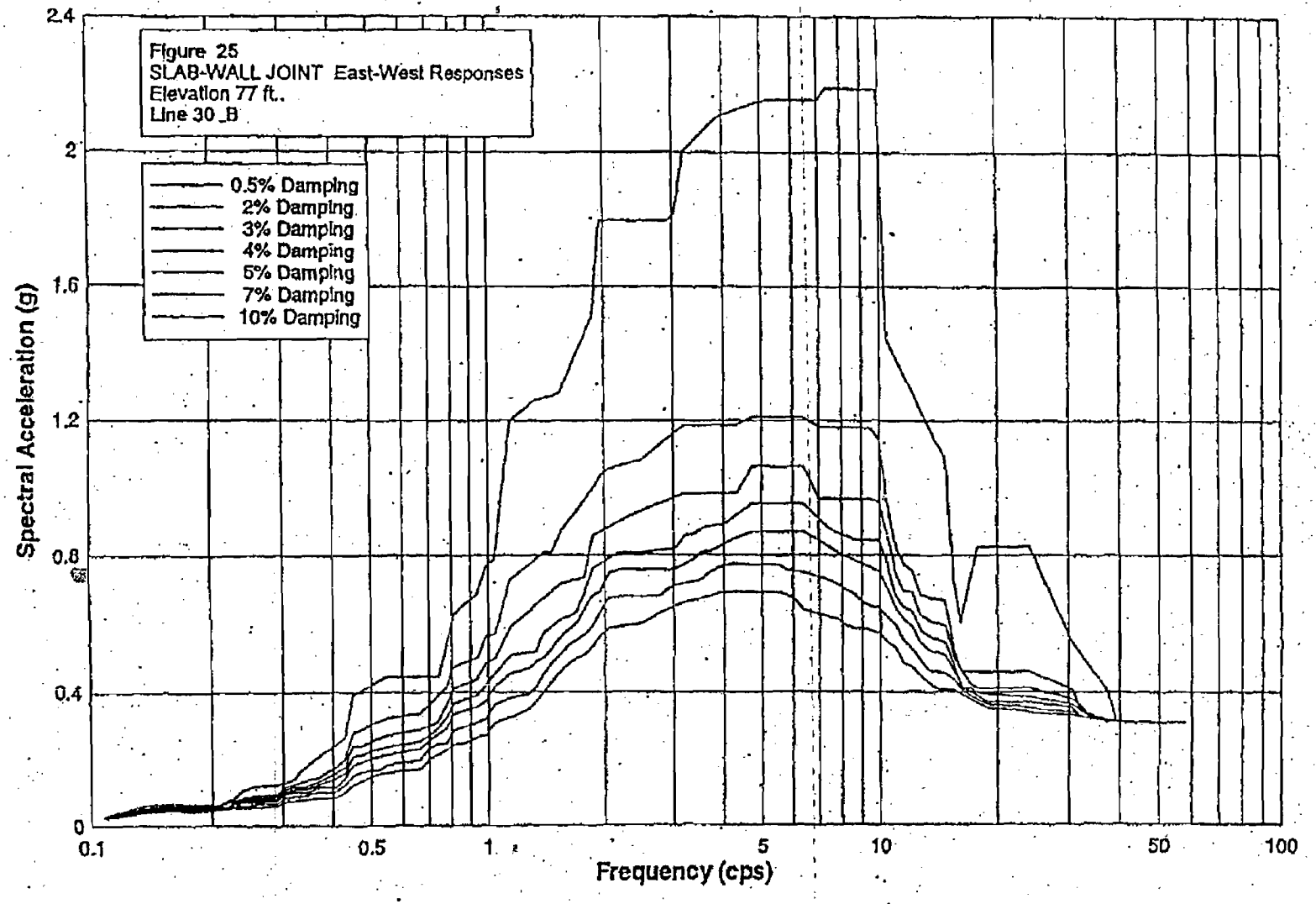

RPP-WTP Pretreatment Facility ISRS

Calc No.: 24590-PTF-S0C-S15T-00005, Rev. 0A

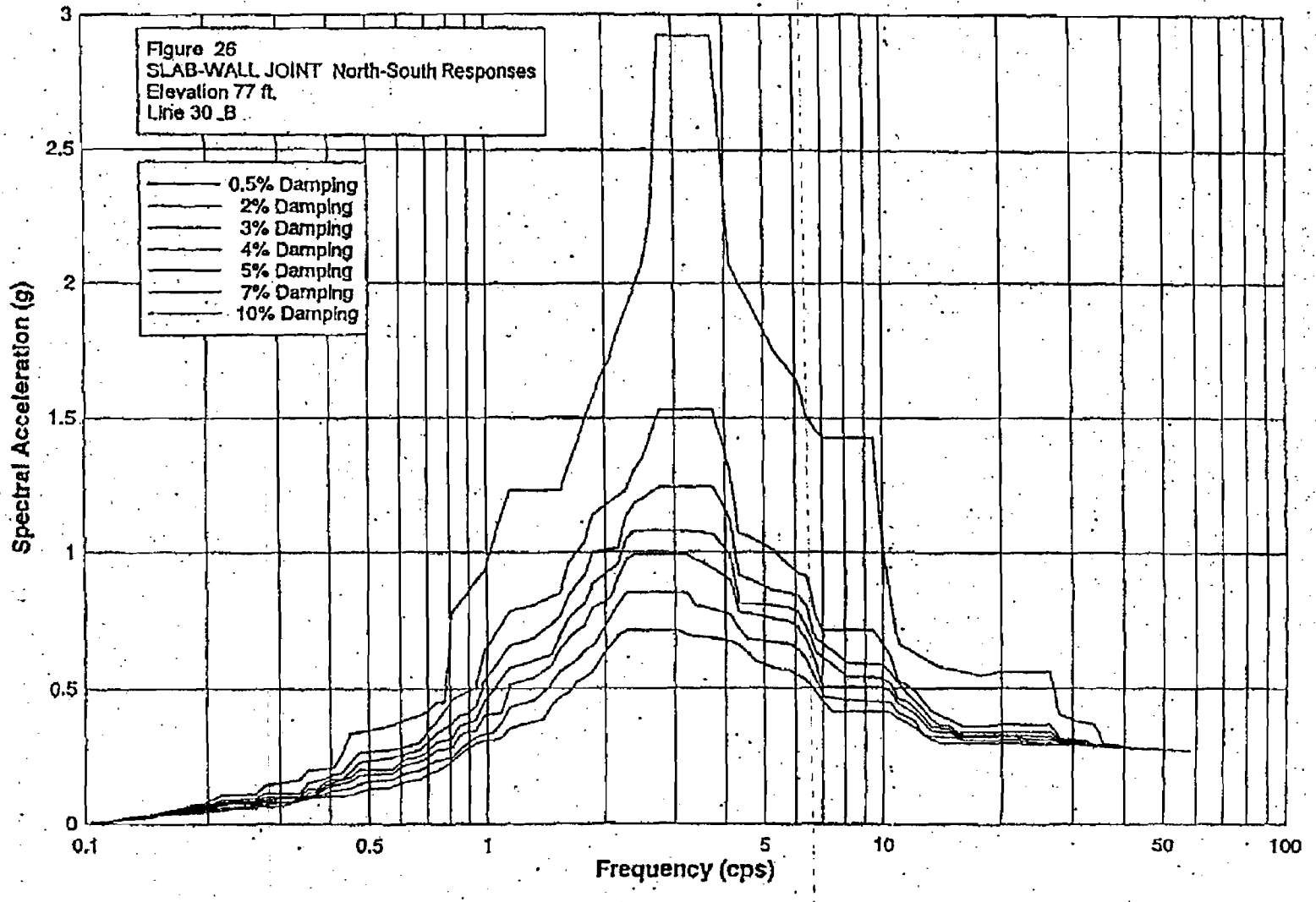

RPP-WTP Pretreatment Facility ISRS

Calc No.: 24590-PTF-S0C-S15T-00005, Rev. 0A

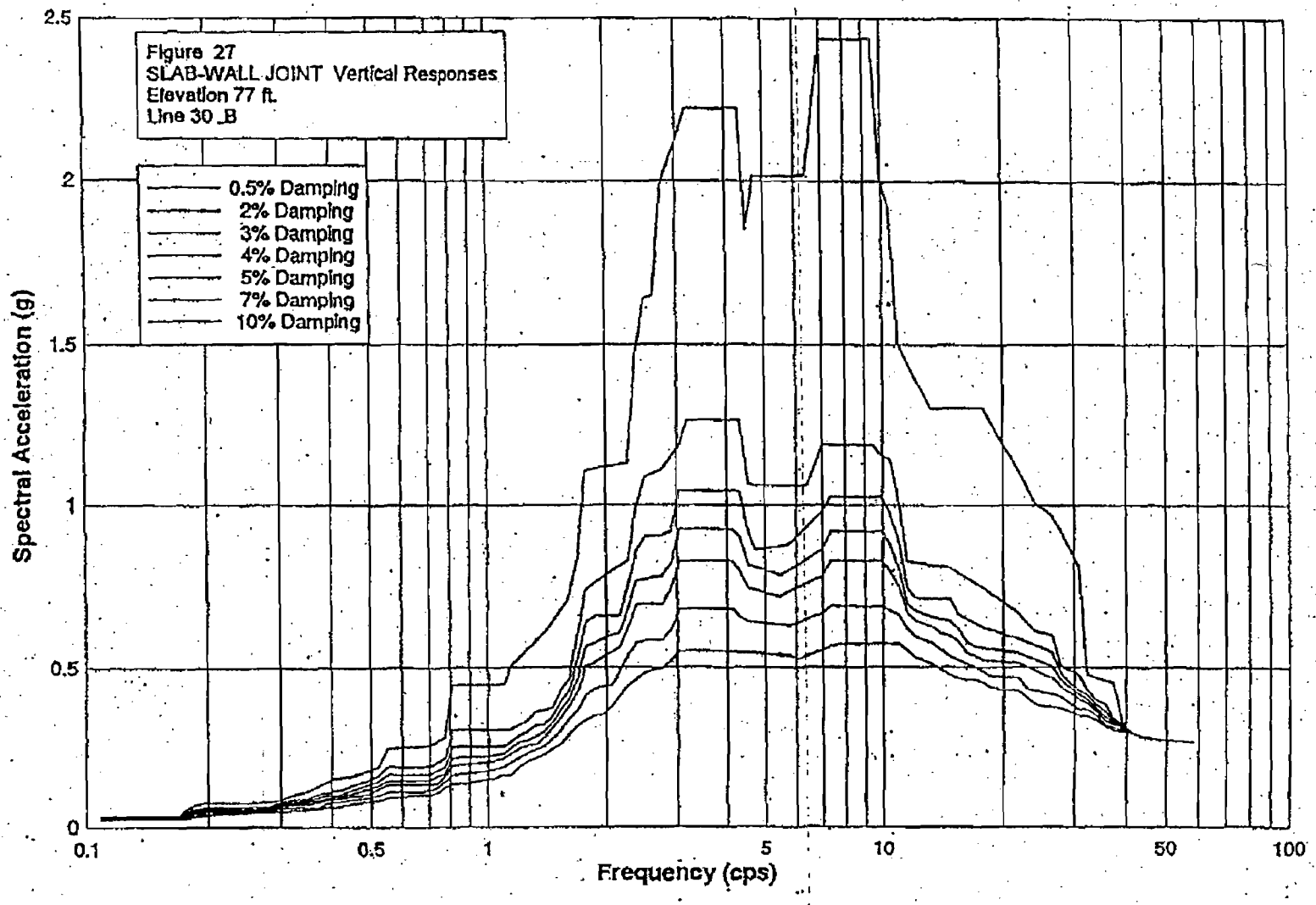

RPP-WTP Pretreatment Facility ISRS

Calc No.: 24590-PTF-S0C-S15T-00005, Rev. 0A

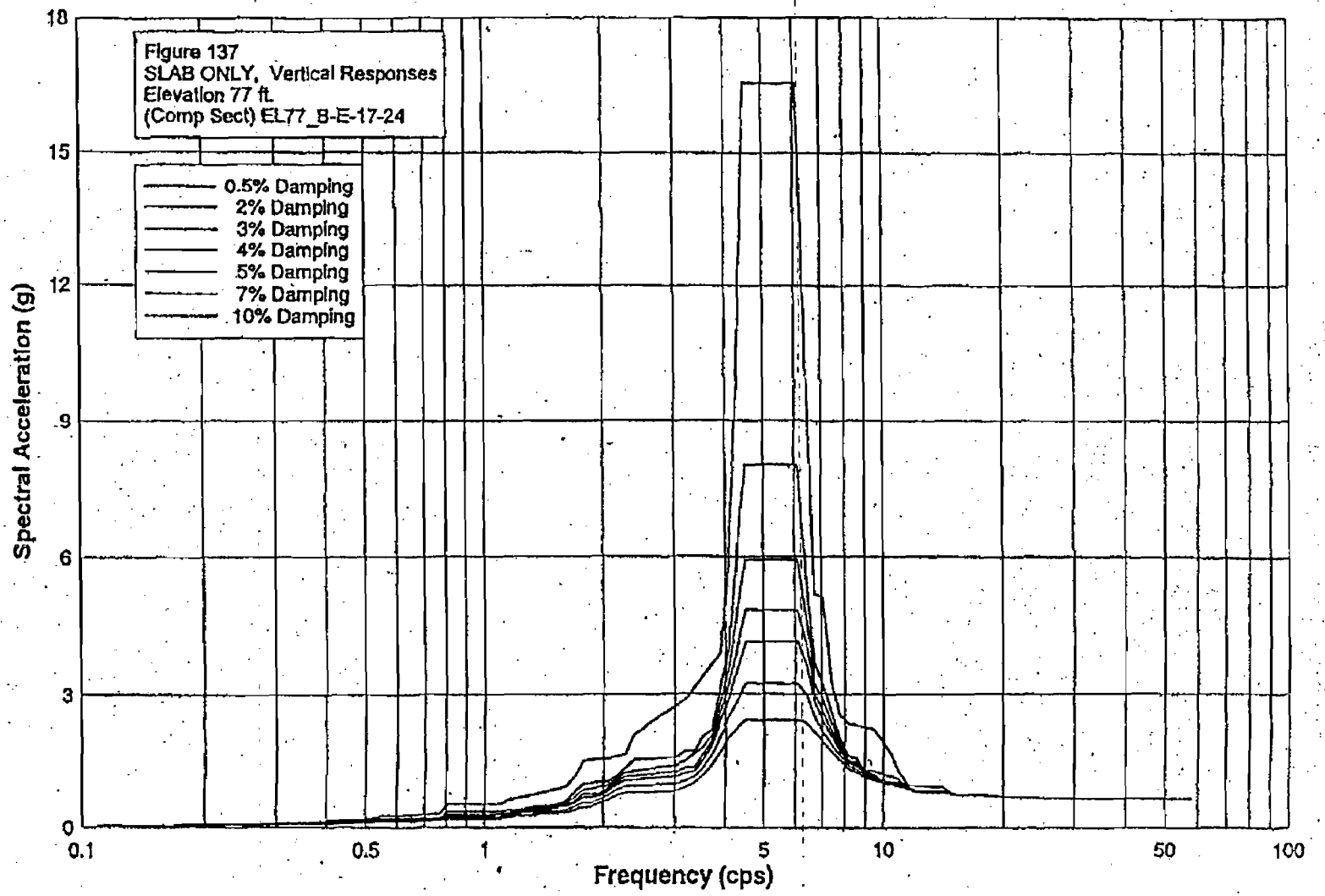

APPENDIX N

Deleted

APPENDIX O

Nondestructive Examination (NDE) of Fabricated Pipe Welds

Non-Destructive Examination (NDE) of Fabricated Pipe Welds

ASME B31.3 Process Piping							
Type of Weld	Cat. D	Normal Fluid Service Less than Class 1500	Normal Fluid Service Class 1500 and Greater	Cat. M Black Cells	Cat. M Dual Containment Pipe		Cat. M All Others
					Inner Pipe	Jacket	
Girth and Miter Welds	100 % VT	100 % VT 5 % RT	100 % VT 100 % RT	100 % VT & RT (1)	100 % VT & RT (1)	100 % VT 5 % RT (3)	100 % VT 20 % PT/MT
Branch Connection Welds and Fillet Welds including Socket and Attachment Welds for Branch Reinforcement and Support Welds	100 % VT	100 % VT	100 % VT	100 % PT/MT (2)	100 % PT/MT (2)	100 % VT	100 % VT 20 % PT/MT

NOTES:

1. The radiographic acceptance criteria for normal fluid service applies except that incomplete penetration and undercut are not permitted.
2. The penetrant and magnetic particle test acceptance criteria shall be in accordance with B31.3 para. 344.4, except that no cracks are permitted.
3. A 5 % random in-process examination shall be performed in lieu of RT in accordance with ASME B31.3, Para. 341.4.1 & 344.7.
4. Black cells include Rm. No's. P-102, 104, 106, 108, 109, 111, 112, 113, 114 & 116 in the PT Building and Rm. No's. H-B005A, B032, B014, B021, B0005, B005A, B015, H-302 & H-308 in the HLW Building.

LEGEND:

RT – Radiographic Examination, PT/MT – Liquid Penetrant or Magnetic Particle Examination, VT – Visual Examination

APPENDIX P

REBOILER SKIDS AND PRELIMINARY NOZZLE LOADS AT GRAYLOC CONNECTIONS

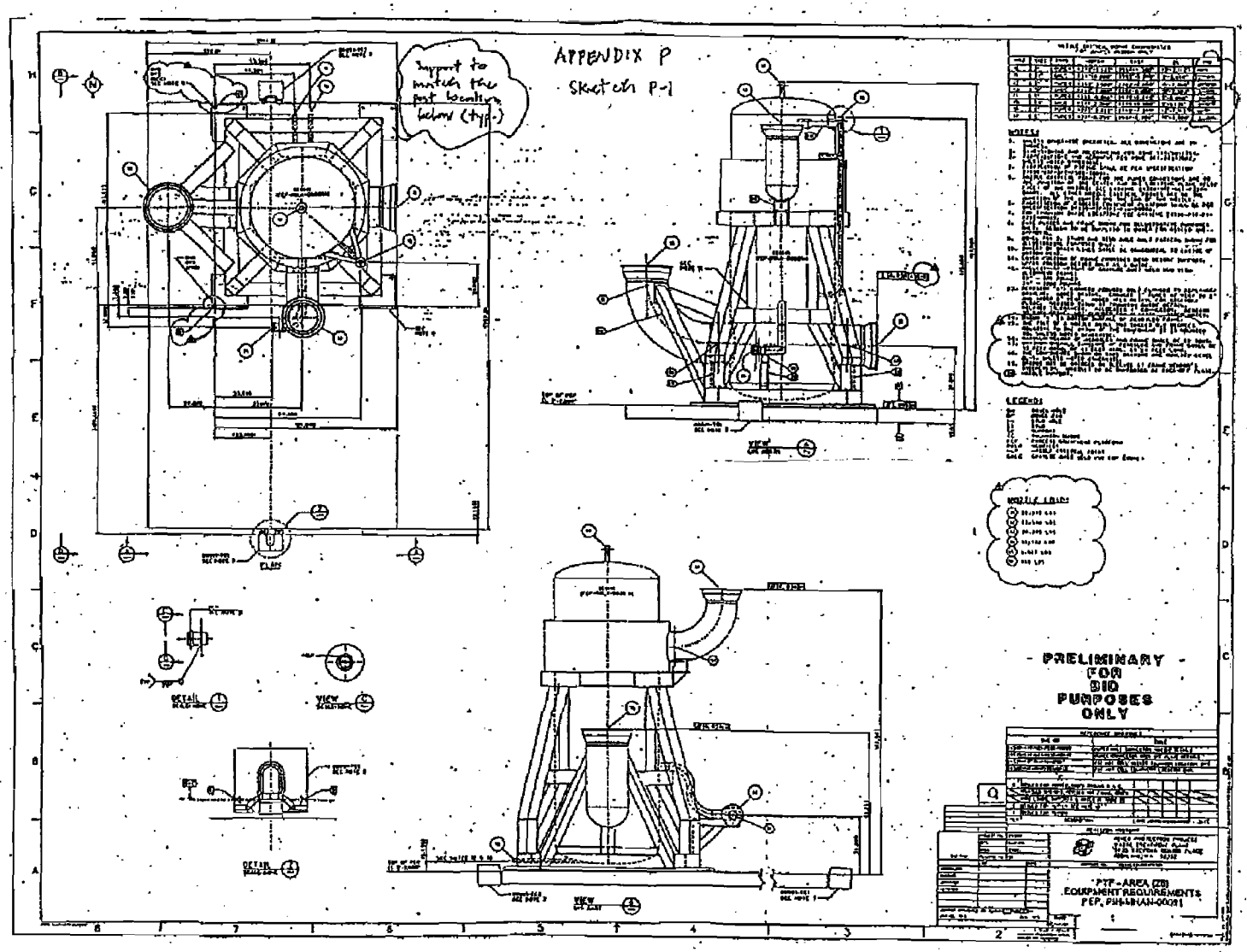
APPENDIX P
Sketch P-1
Support to match the post location below (typ.)
PLAN
VIEW
DETAIL
NOTES:
LEGEND:
NOZZLE LOAD:
- PRELIMINARY -
FOR
BID
PURPOSES
ONLY
PTF - AREA (28)
EQUIPMENT REQUIREMENTS
PEP, PHASE-IV-00091

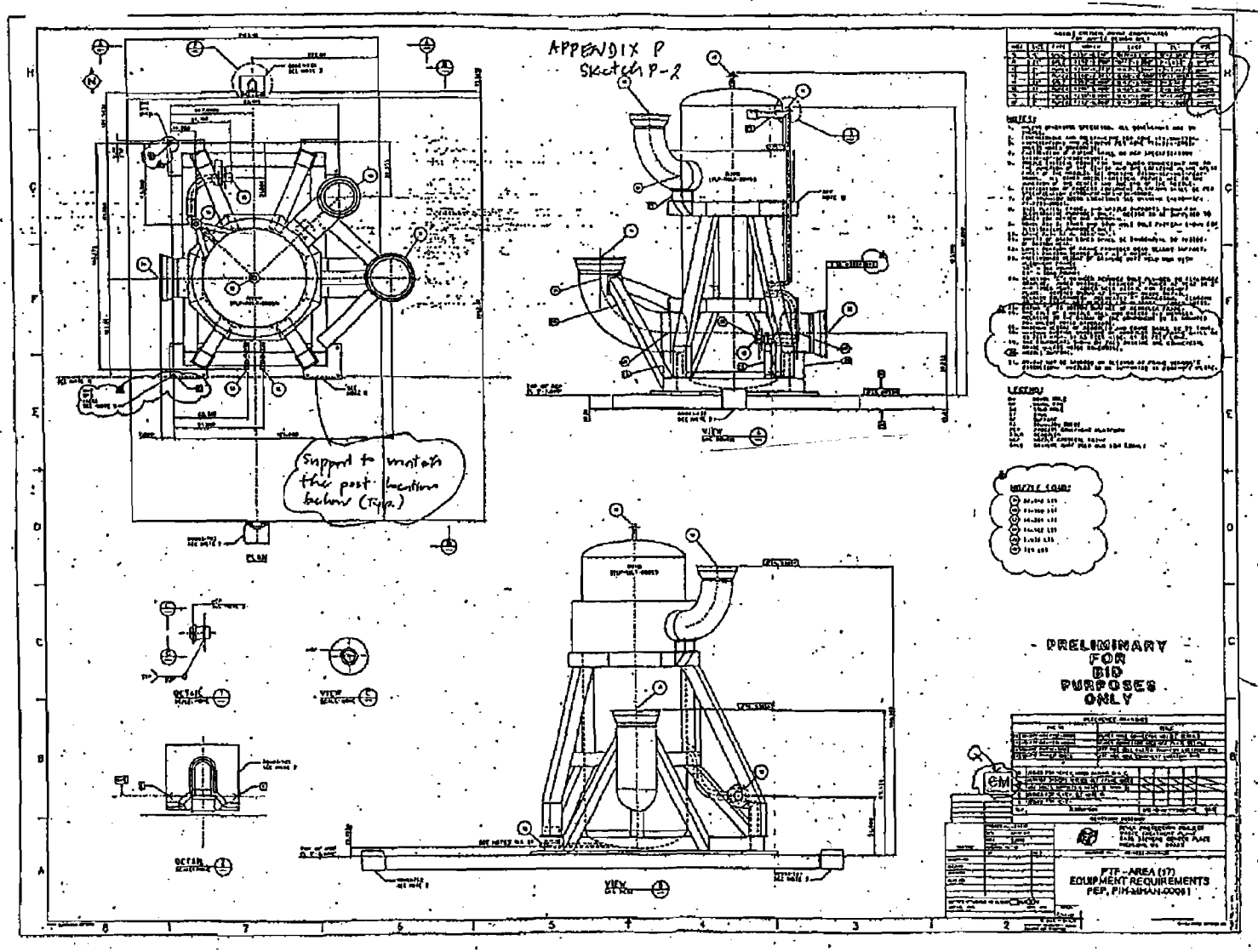
APPENDIX P
Sketch P-2
Support to match the post locations below (Typ.)
PLAN
VIEW
OCTAN
PRELIMINARY FOR BID PURPOSES ONLY
PTF - AREA (17)
EQUIPMENT REQUIREMENTS
PEP, PIH-MHAN-00061

APPENDIX P

FEP / TLP Large Bore Reboiler Connector Loads

	System	Force		Moment	
		Axial	Resultant Shear	Torsion	Resultant Bending
		lbf	lbf	ft-lbf	ft-lbf
24-Inch					
AREA_17S	TLP	6400	15400	4300	33900
AREA_17D	TLP	11600	13900	31400	24000
AREA_26S	FEP	2100	8200	17100	30800
AREA_26D	FEP	14600	9900	19100	29300
AREA_27S	FEP	2100	8200	17100	30800
AREA_27D	FEP	14600	9900	19100	29300
18-Inch					
AREA_17ST	TLP	7600	3700	9000	6900
AREA_26ST	FEP	6700	4900	4600	11000
AREA_27ST	FEP	6700	4900	4600	11000

S - Suction D - Discharge ST - Steam

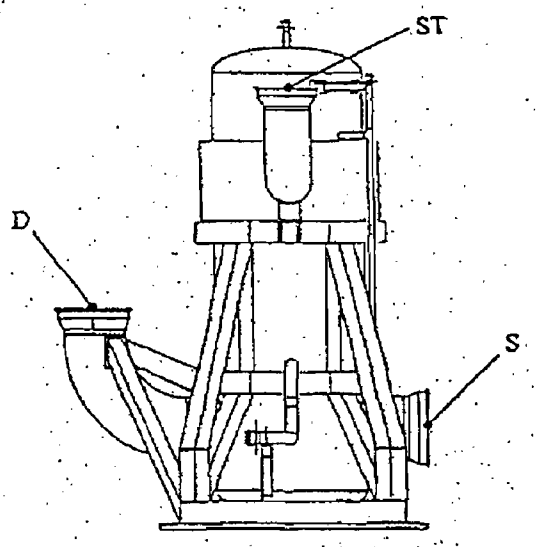

* The loads displayed in the table above are taken from unchecked / preliminary calculations. Loads occur at hub interface as shown in figure above.

APPENDIX P

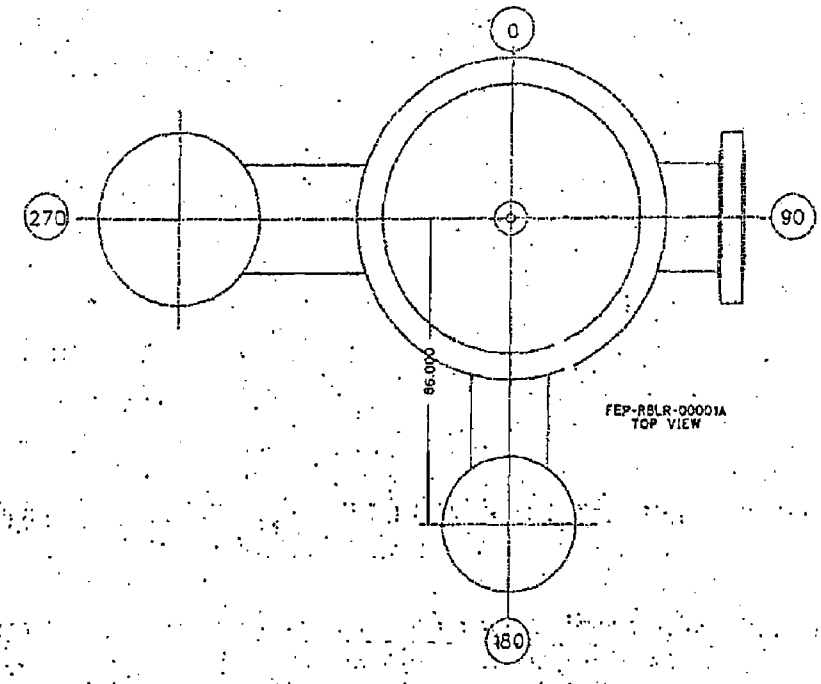

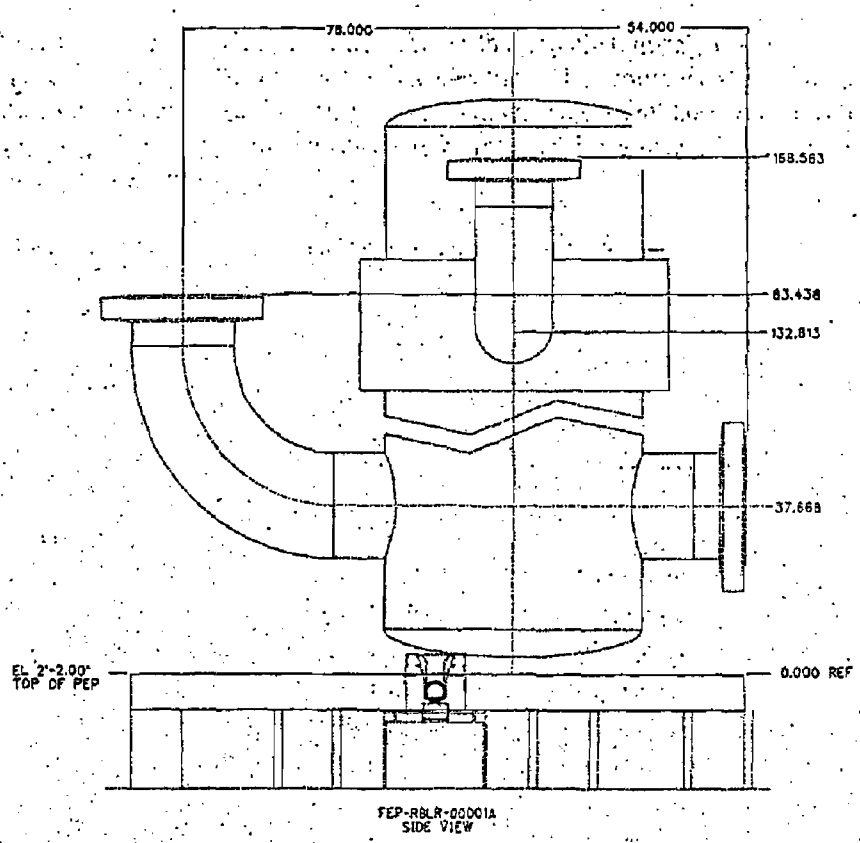

NOZZLE ORIENTATION, ELEVATION, AND DISTANCE FROM CENTERLINE
FEP-RBLR-00001A

APPENDIX P

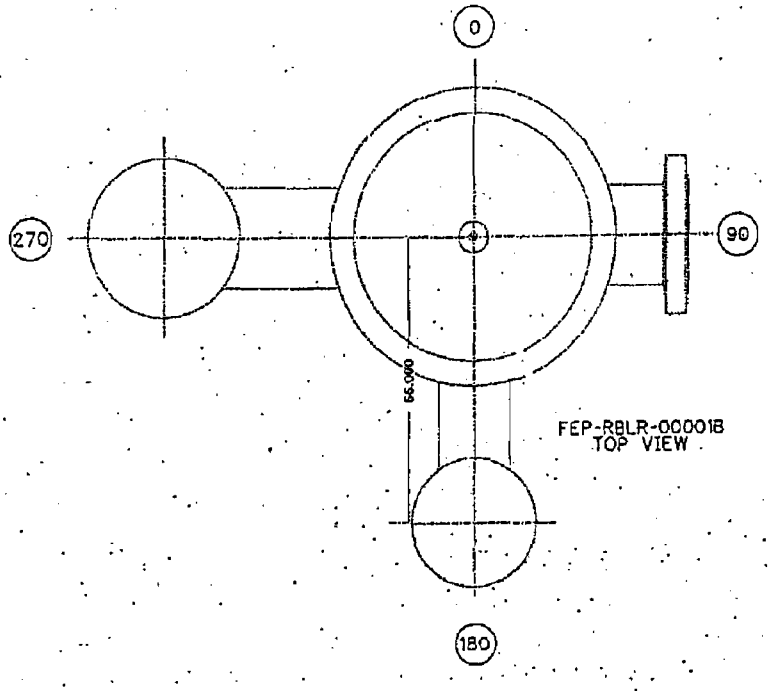

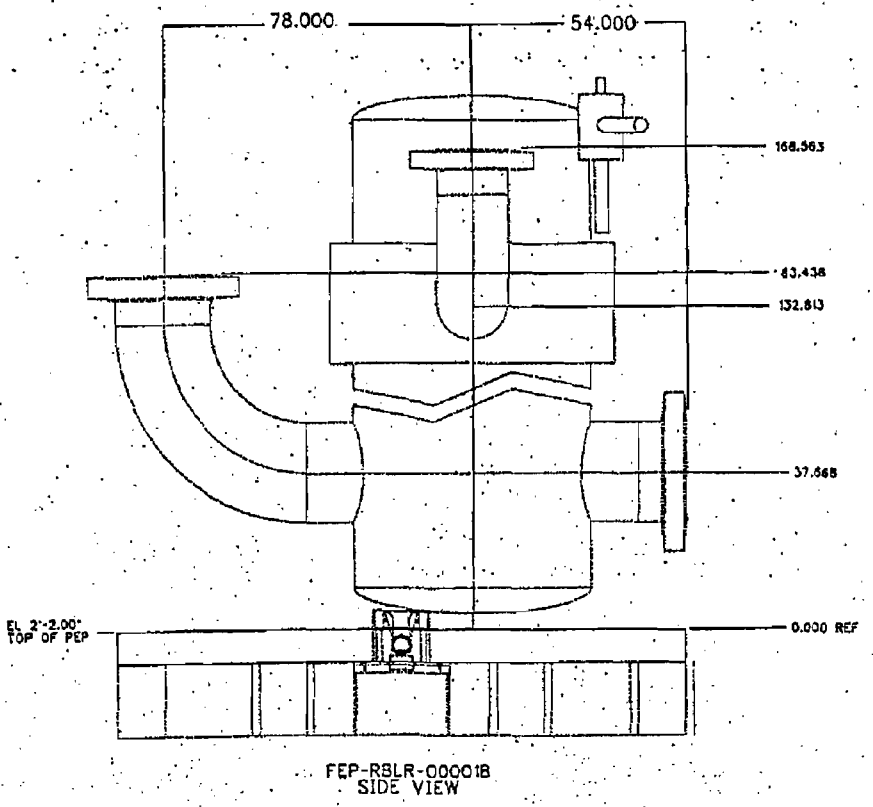

NOZZLE ORIENTATION, ELEVATION, AND DISTANCE FROM CENTERLINE
FEP-RBLR-00001B

APPENDIX P

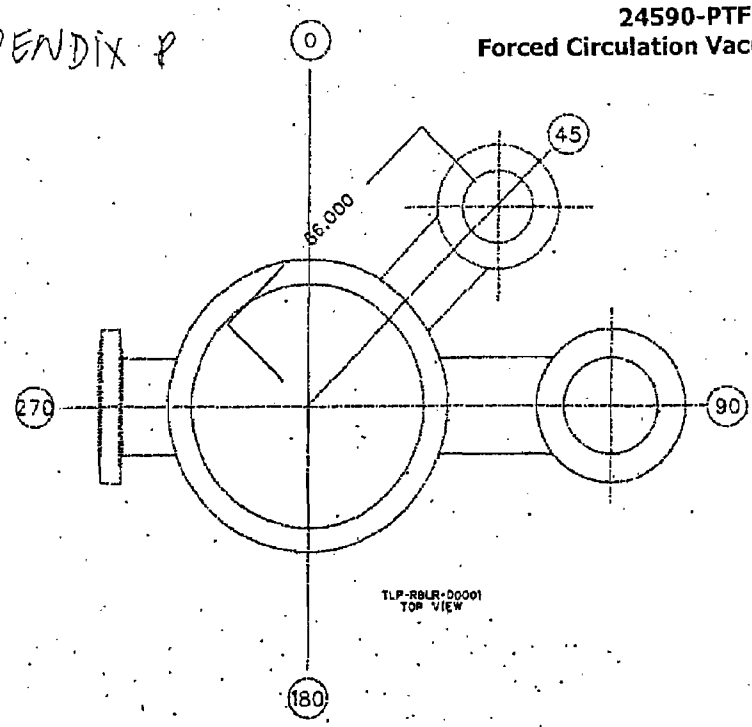

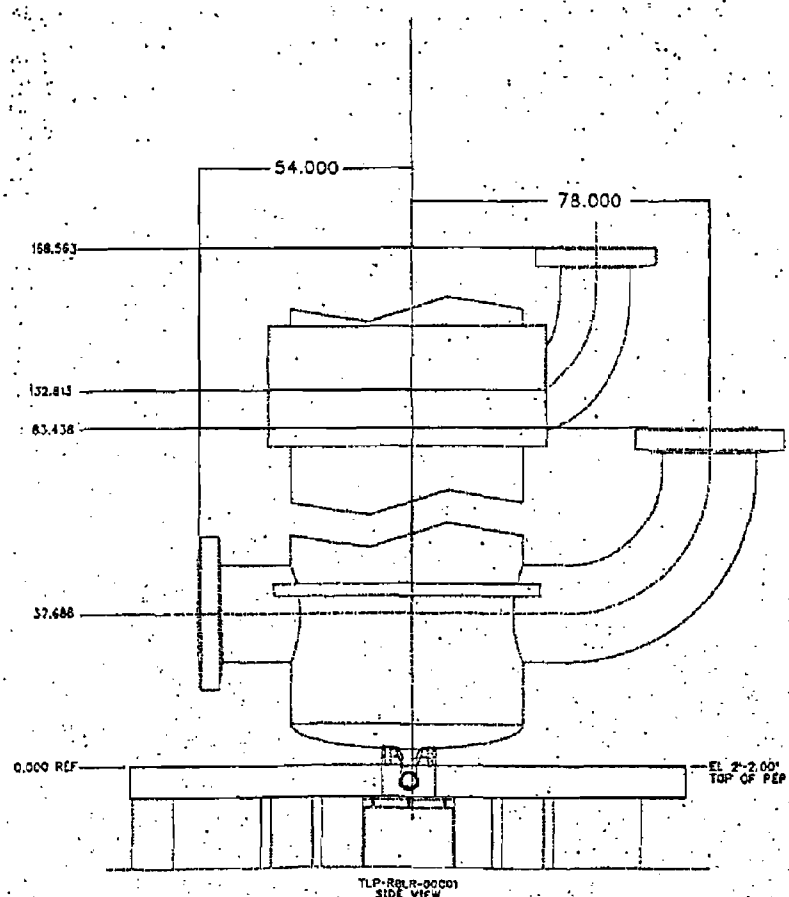

NOZZLE ORIENTATION, ELEVATION, AND DISTANCE FROM CENTERLINE
TLP-RBLR-00001

APPENDIX Q

REBOILERS AND RECIRCULATION PUMPS LAYOUT

APPENDIX Q
SKETCH Q-1

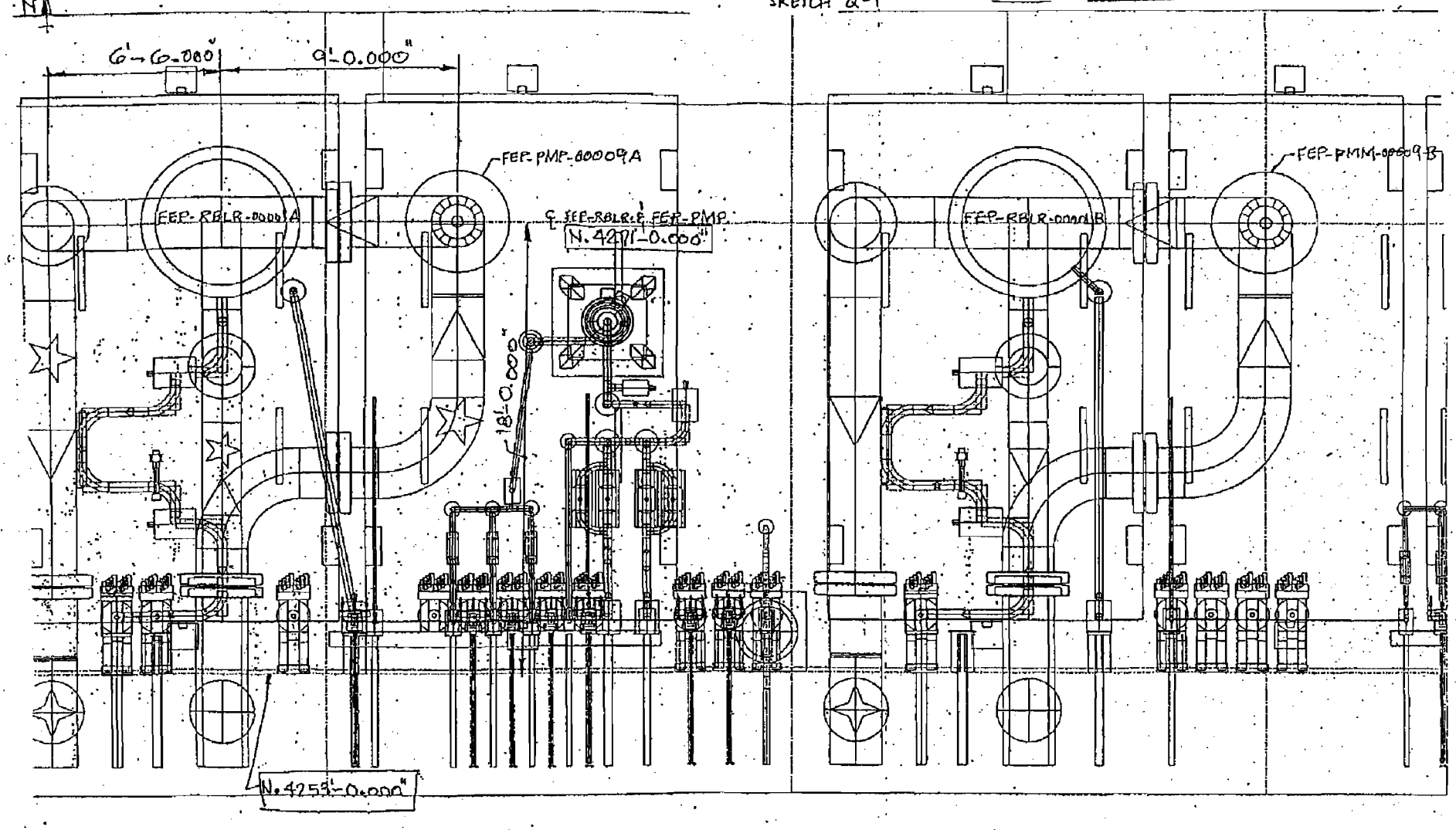

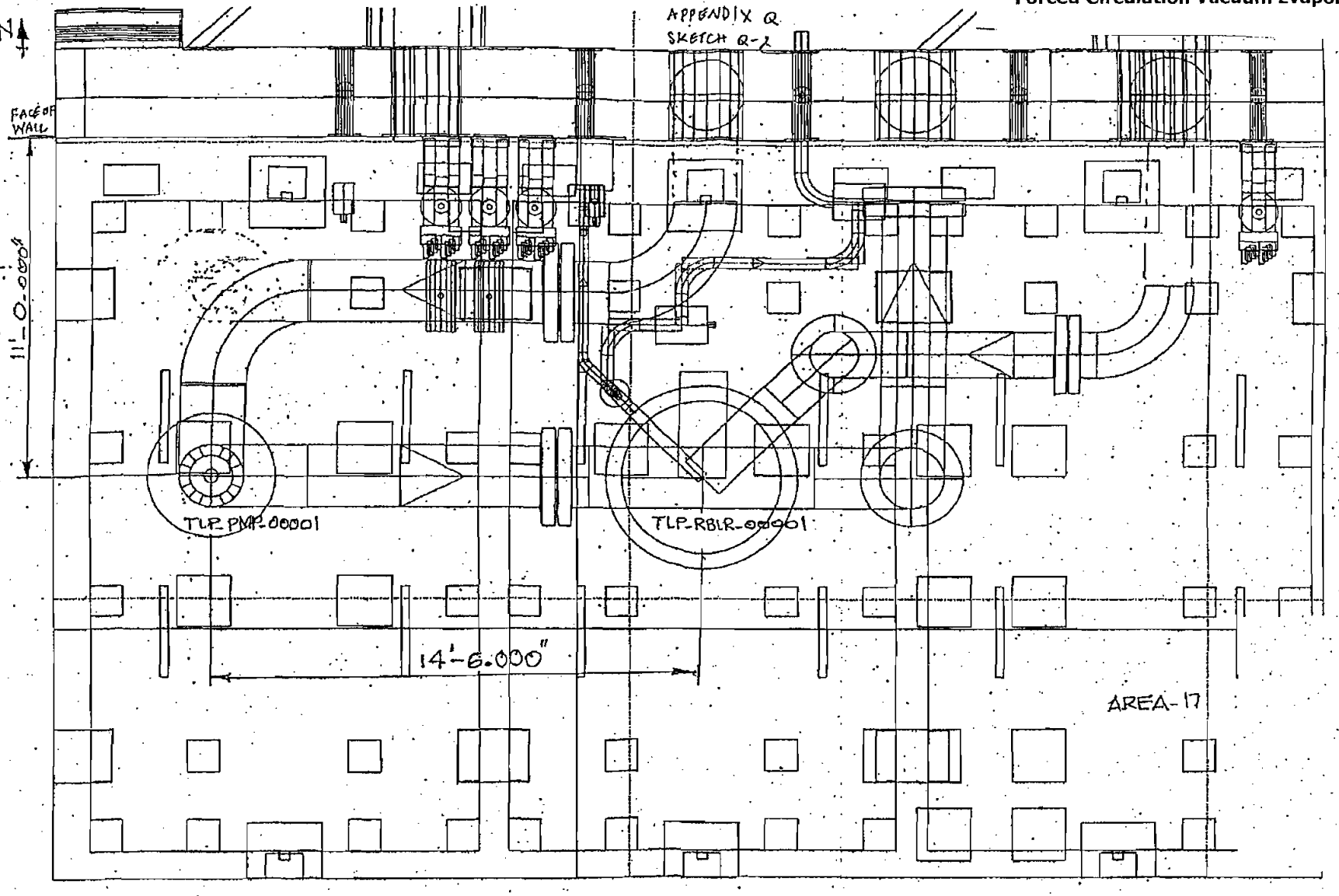
N
APPENDIX Q
SKETCH Q-2
FACE OF WALL
11'-0.000"
TLP-PMP-00001
TLP-RBLR-00001
14'-6.000"
AREA-17

APPENDIX R

ISRS FIGURES FOR REBOILERS AT THE STEEL FRAM SUPPORTS

APPENDIX K

Sketch R-1

RPP-WTP Pretreatment Facility ISRS

Calc No.: 24590-PTF-S0C-S15T-00005, Rev. 0A

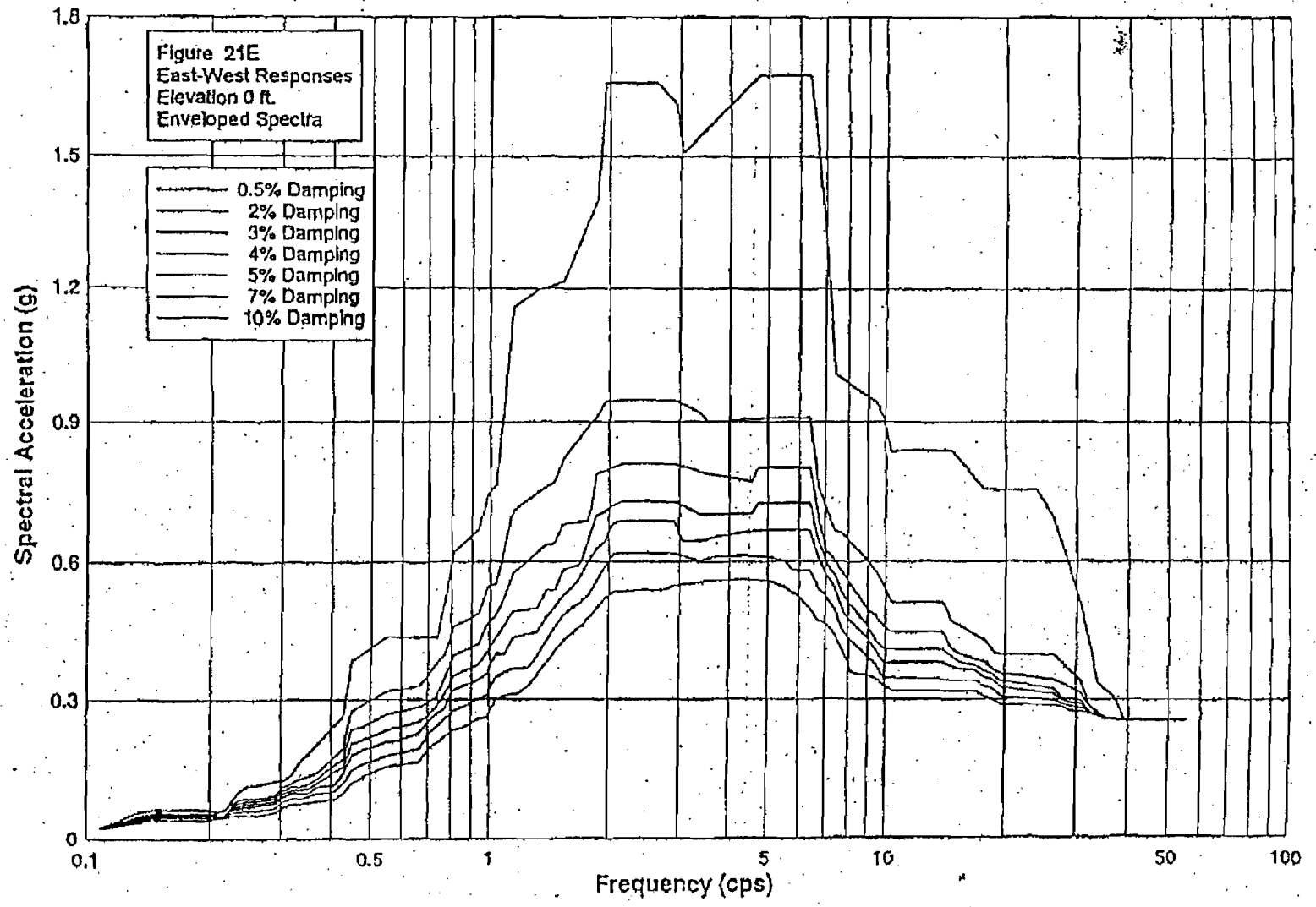

APPENDIX K

SKETCH K-2

RPP-WTP Pretreatment Facility ISRS

Calc No.: 24590-PTF-S0C-S15T-00005, Rev. 0A

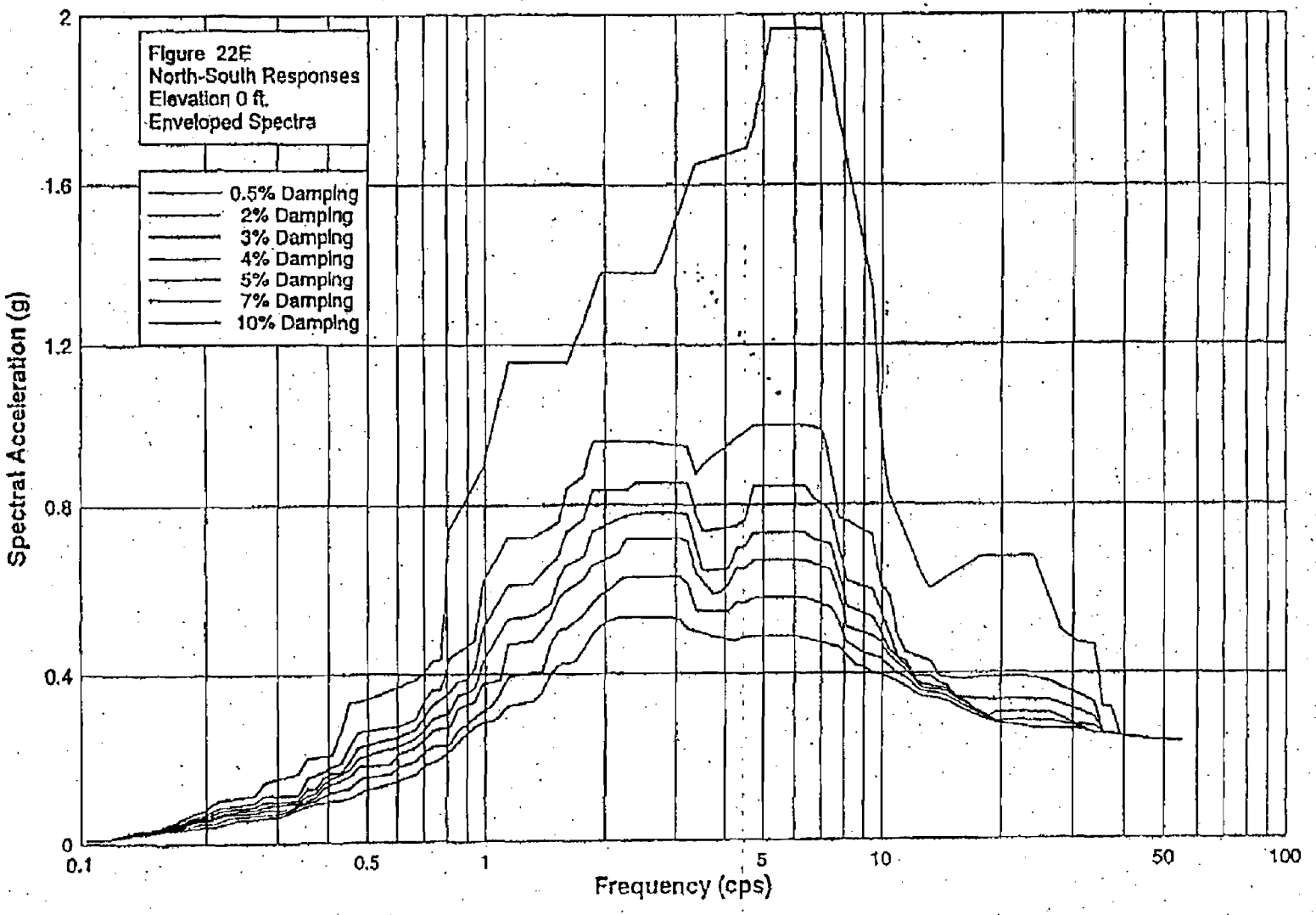

RPP-WTP Pretreatment Facility ISRS

Calc No.: 24590-PTF-S0C-S15T-00005, Rev. 0A

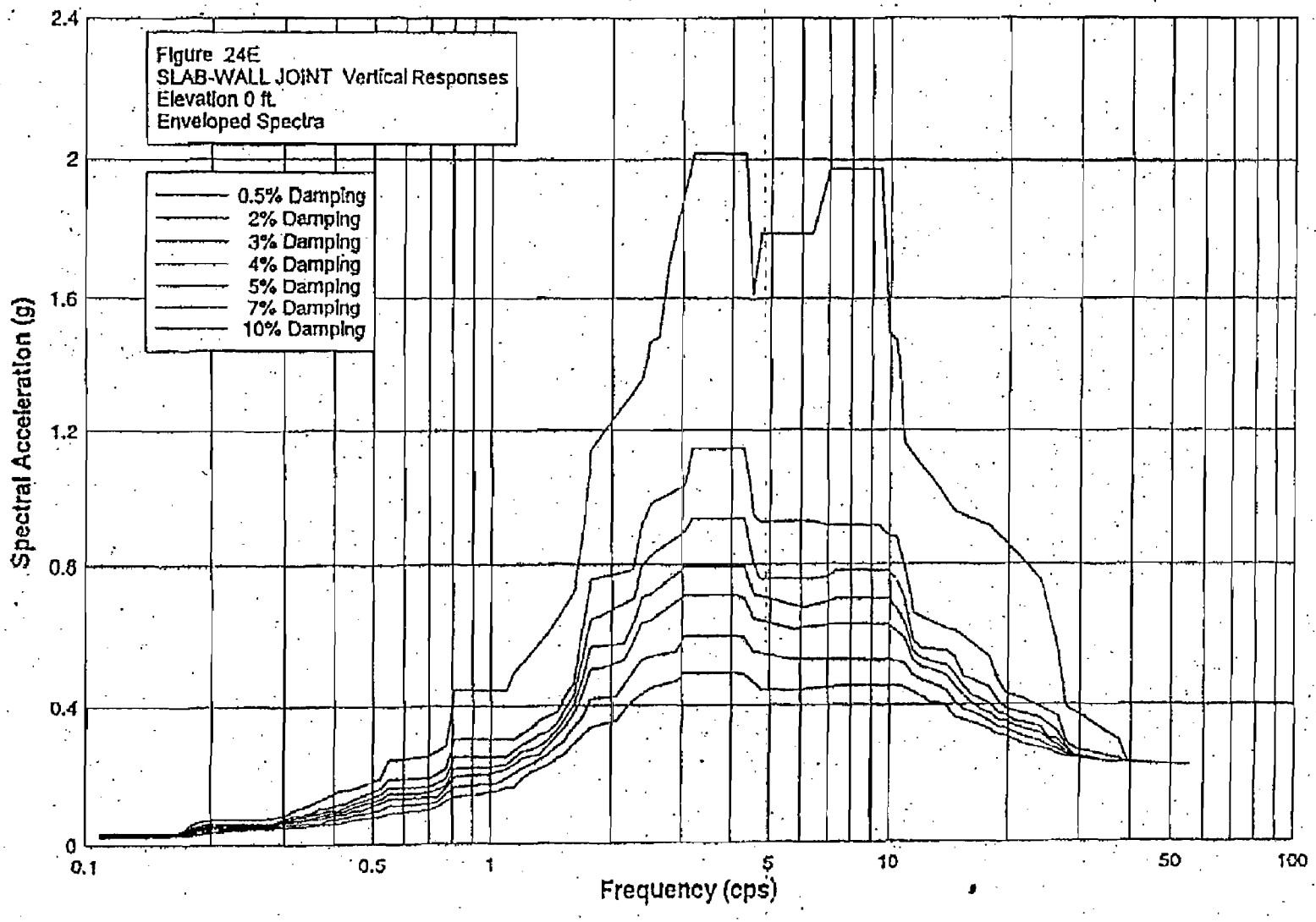

APPENDIX S

MANUFACTURERS STANDARD COATING DATA SHEET

Manufacturers Standard Coating Data Sheet

The SELLER proposes the following Manufacturers Standard (Mfg. Std.) or alternate coating system that is suitable for the exposure conditions of steel items and equipment in radiation and non-radiation areas.

1. **Equipment Description:** _____
   A. Tag Number _____
   B. Part(s) i.e. skirt, shell, channels, lugs, etc.* _____
   C. Design/Operating Temperatures, designate °F or °C..... _____ °F _____ °C
   D. Does Equipment Receive Steam out (Yes/No), Temperature _____ °F _____ °C
   E. Insulated/Uninsulated _____
   F. Fireproofing (Yes/No) _____
   G. Carbon Steel (CS), Stainless Steel (SS), other (List) _____
2. **Seller:** _____
3. **Surface Preparation:** SSPC No./Profile _____ / _____
4. **Coating System Designation:** (Code)

	First Coat	Second Coat	Third Coat
A. Type of Coating.....			
B. Coating Mfg./No.**			
C. Dry Film Thickness (Min/Max in mils)/(μm) ...			
D. Wet/Film Thickness (Min/Max in mils)/(μm)			
E. Curing Method.....			
F. Color.....			
G. Dry to Recoat			
H. Pot Life.....			
I. Thinner / %			

5. **Total DFT of System:** (Mils/μm)(Min/Max)..... _____ / _____ Min. _____ /Max.
6. **Material Storage:** Temperature Requirements (Min/Max) _____ / _____
7. **Shelf Life:**..... _____ Months
8. **Application Environmental Limits:**
   A. Temperature Ambient and Surface (Min/Max) ..... _____ / _____ _____ / _____
   B. Humidity (Min/Max)..... _____ / _____
   C. Dew Point ≥5°F above surface temp. (Yes/No)..... _____
9. **Protection of surfaces that will be inaccessible after equipment installation (such as underside of base plates, interior of fans, vessels or equipment housings)** _____
10. **Rust Preventative for machined faces:** (**Mfg./No.) _____
11. **Quantity of touch-up coating supplied:** _____
12. **Additional information:** (attach extra page as necessary) _____

* Use additional copies of this form for each part described in 1 above that requires a different coating system. A completed copy of this data sheet shall be submitted to CONTRACTOR/BUYER with the initial vendor data submittal.

** Include manufacturers technical data sheets and MSDS' for each proposed coating, preservative & solvent

APPENDIX T

Design Evolution Inputs

T.1 Recirculation Pump Remote Connector Design Inputs

Design Input #1: The Hanford connector loads are 2000 lbs resultant force and 2900 ft-lbs resultant moment.

Design Input #2: See attached reference # 2 for Staubli connector drawings. It is recommended to use connector types as shown on drawings S-01162803-A and S-01142503-A for power and signal. Also see sketches provided in this section T.1 for additional design inputs. The Staubli connector force requirement is 400 lbf in any direction.

Design Input #3: For seal water and grease connections, the male plug located on the pump seals which has been called out as a Staubli part number RBE 19.6204/IC will change to Staubli part number N 011 612 04. See sketches # S-01249904-F, # S-00122805-A, # S-00119705-B, and S-111610-04-D provided in this section. The Staubli Fluids Connector shall use Keying #35 for for the seal water and grease connnection.

Design Input #4: Remote impact wrench specification on studs
a) Loosen 750 ft-lbs
b) Tighten 400 ± 25 ft-lbs
c) Range 100 - 400 ft-lbs

Design Input #5: Recirculation pump shall be designed to incorporate remote grease application to thrust bearing.

24590-PTF-3PS-MEVV-TP001, Rev 2
Forced Circulation Vacuum Evaporator System

For power cable (prefer)

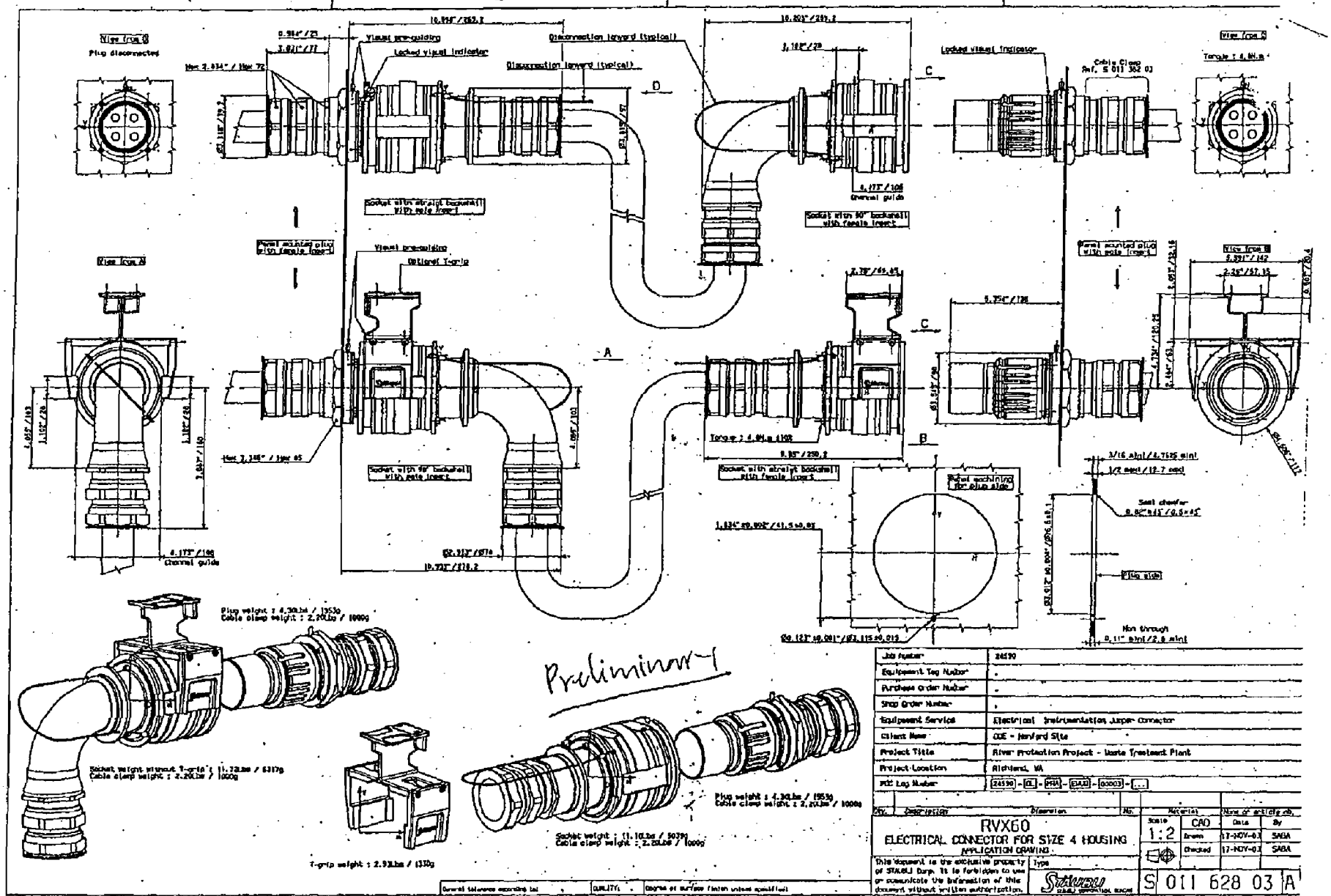

T-3

For signal cable (prefer)

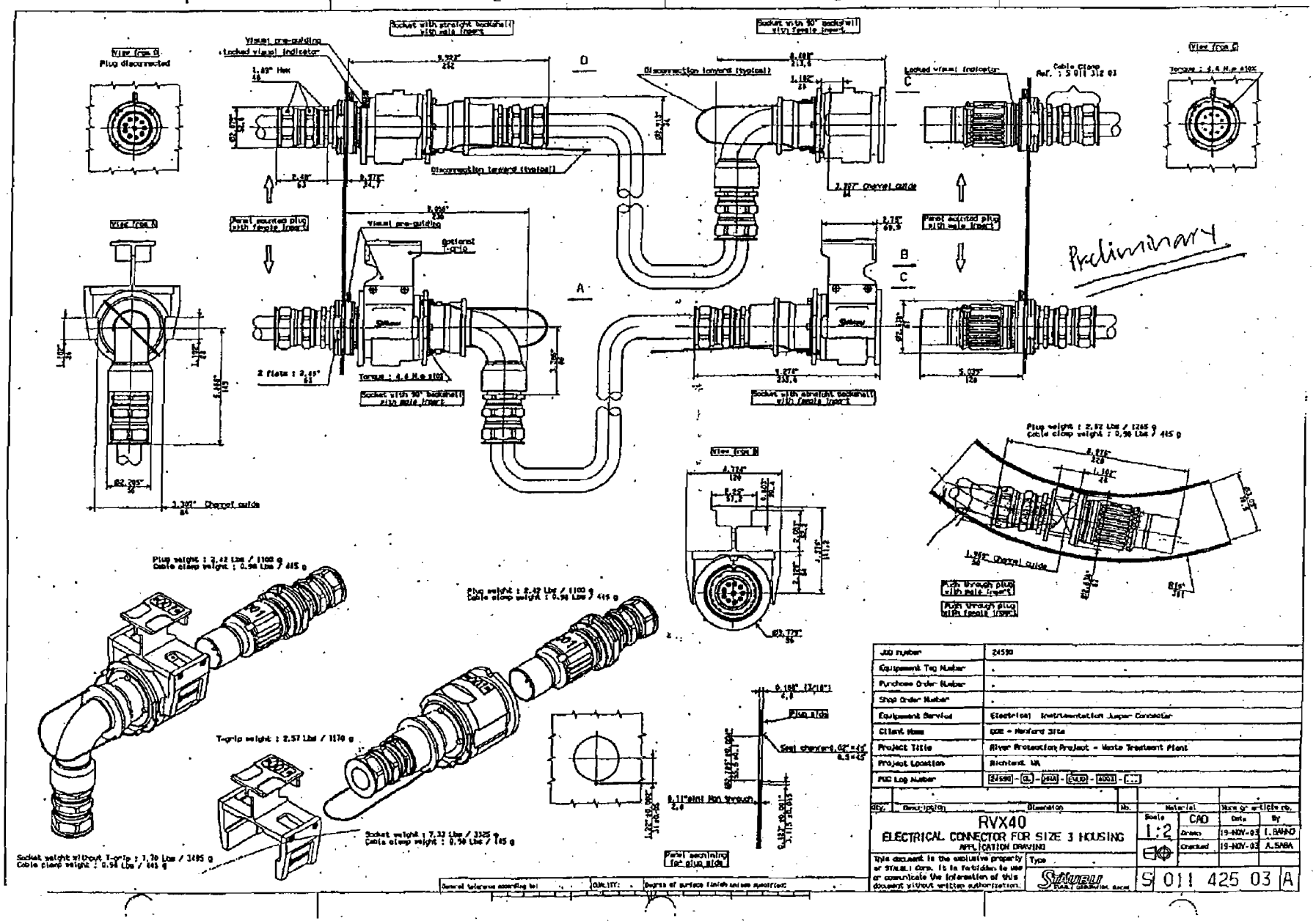

T-4

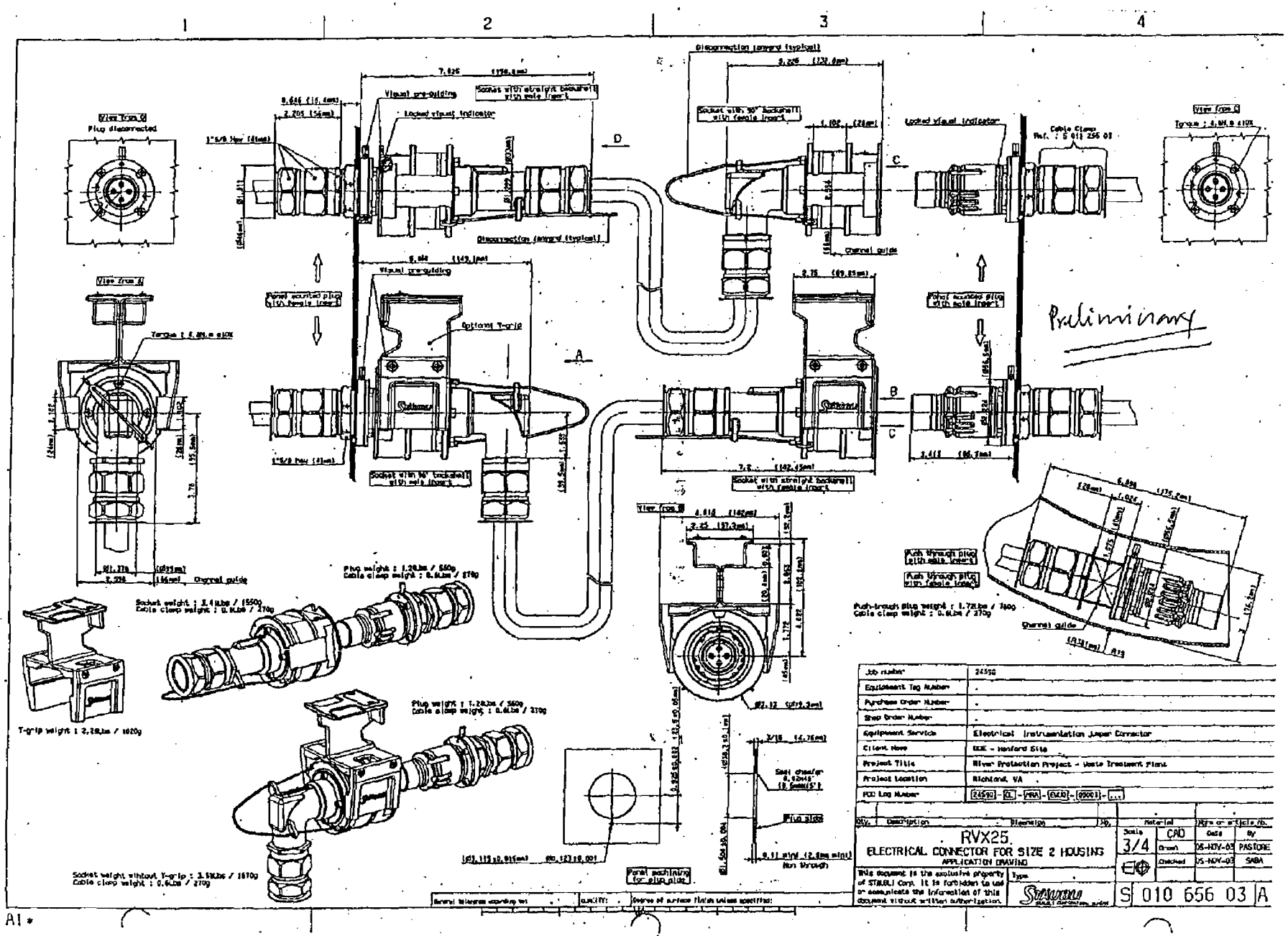
Preliminary
RVX25
ELECTRICAL CONNECTOR FOR SIZE 2 HOUSING
APPLICATION DRAWING
Job number 24590
Equipment Tag Number
Purchase Order Number
Shop Order Number
Equipment Service Electrical Instrumentation Jumper Connector
Client Name DOE - Hanford Site
Project Title River Protection Project - Waste Treatment Plant
Project Location Richland, VA
POD Log Number 24590-QL-MRA-EVVD-00001-...
Material CAD
Scale 3/4
Drawn 05-NOV-03 PASTORE
Checked 05-NOV-03 SABA
S 010 656 03 A
This document is the exclusive property of STAUBLI Corp. It is forbidden to use or communicate the information of this document without written authorization.
Panel machining for plug side
Socket weight without T-grip : 3.5lbs / 1670g
Cable clamp weight : 0.6Lbs / 270g
T-grip weight : 2.2lbs / 1020g
Socket weight : 3.4lbs / 1550g
Cable clamp weight : 0.6Lbs / 270g
Plug weight : 1.2lbs / 560g
Cable clamp weight : 0.6Lbs / 270g
Plug weight : 1.2lbs / 560g
Cable clamp weight : 0.6Lbs / 270g
Push through plug weight : 1.7lbs / 760g
Cable clamp weight : 0.6Lbs / 270g
Channel guide
Optional T-grip
Panel mounted plug with female insert
Panel mounted plug with male insert
Locked visual indicator
Visual pre-guiding
Socket with straight backshell with male insert
Socket with 90° backshell with female insert
Socket with straight backshell with female insert
Socket with 90° backshell with male insert
Disconnection (empty typical)
Plug disconnected
View from A
View from B
View from C
Cable Clamp Ref. : 5 011 256 03
Plug side
Non through
Seal chamfer
Degree of surface finish unless specified:
QUANTITY:
General tolerance according to:
A1 *

T-5

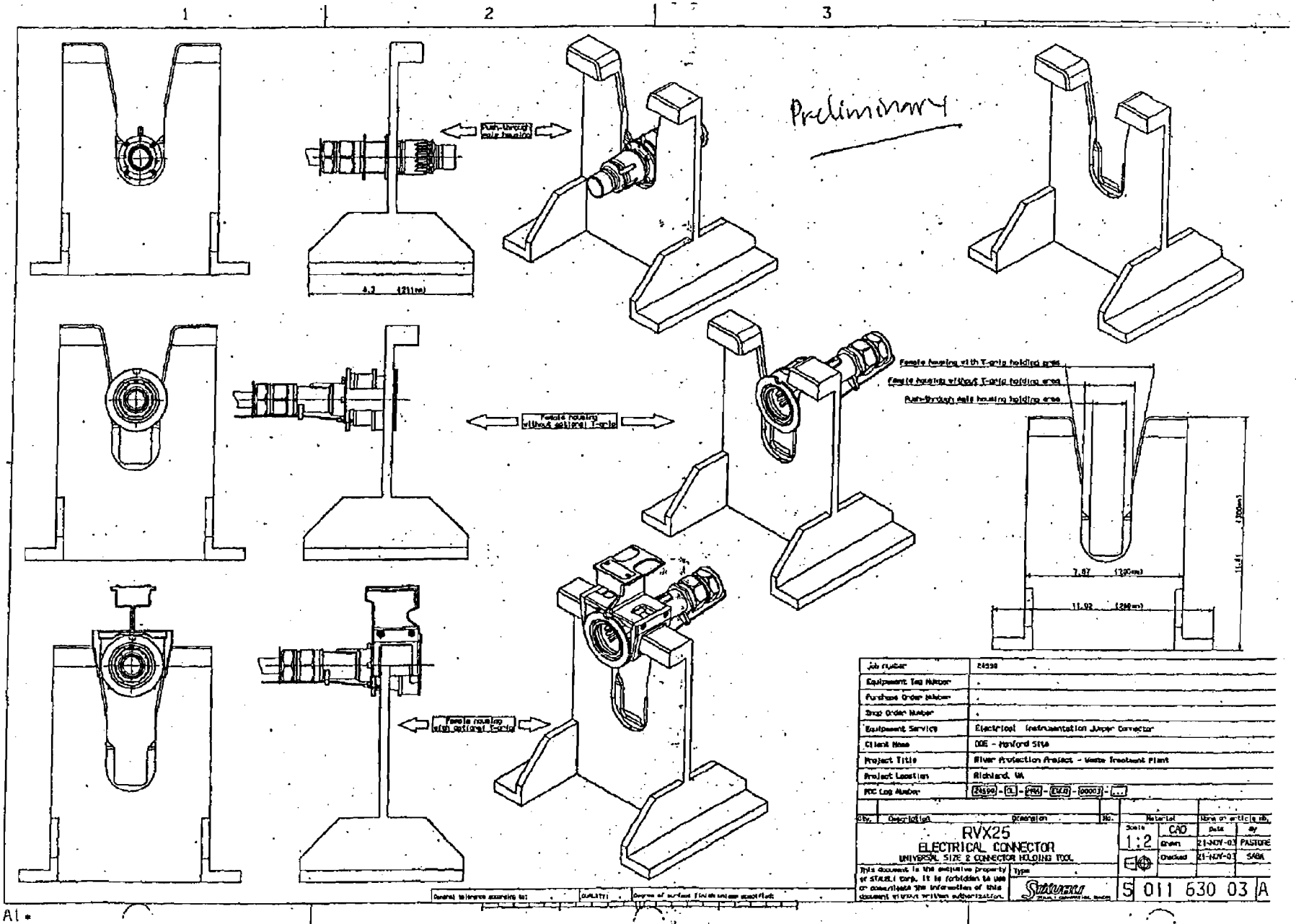
1
2
3
Preliminary
Push-through male housing
4.3 (211mm)
Female housing without optional T-grip
Female housing with optional T-grip
Female housing with T-grip holding area
Female housing without T-grip holding area
Push-through male housing holding area
7.87 (200mm)
11.02 (280mm)
11.41 (300mm)
Job number 24590
Equipment Tag Number
Purchase Order Number
Snap Order Number
Equipment Service Electrical Instrumentation Jumper Connector
Client Name DOE - Hanford Site
Project Title River Protection Project - Waste Treatment Plant
Project Location Richland, WA
PDC Log Number 24590 - OL - PRA - EWJD - 00003 - ...
Qty. Description Dimension No. Material None or article no.
RVX25
ELECTRICAL CONNECTOR
UNIVERSAL SIZE 2 CONNECTOR HOLDING TOOL
Scale 1:2
CAD
Drawn 21-NOV-03 PASTORE
Checked 21-NOV-03 SABA
This document is the exclusive property of STAUBLI Corp. It is forbidden to use or communicate the information of this document without written authorization.
Type
S 011 630 03 A
General tolerance according to:
QUALITY:
Degree of surface finish unless specified:
A1

T-6

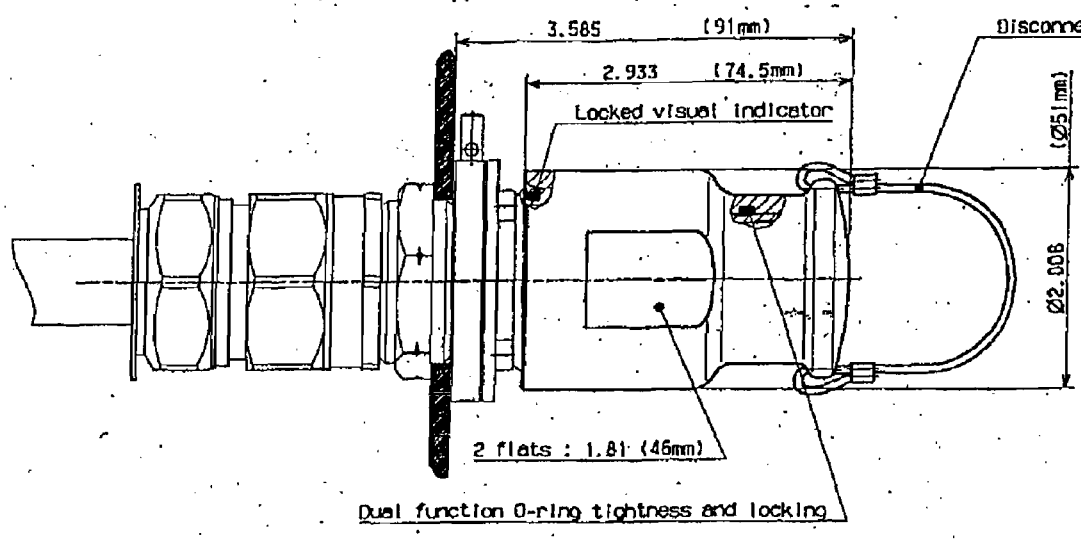

Preliminary

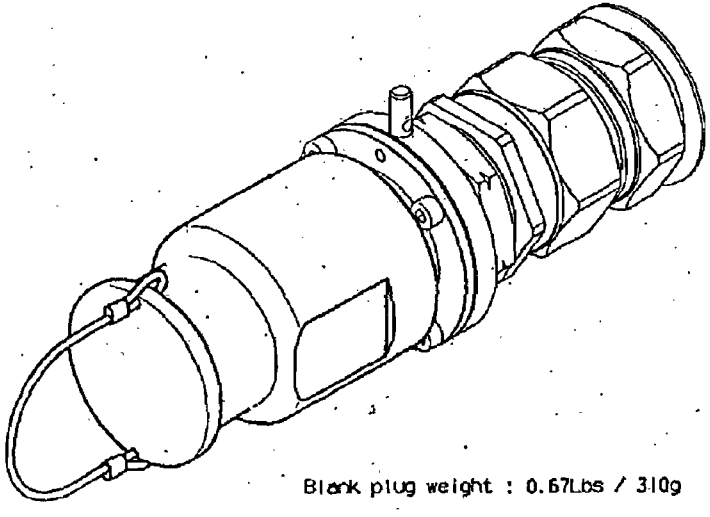

Blank plug weight : 0.67Lbs / 310g

Job number	24590
Equipement Tag Number	.
Purchase Order Number	.
Shop Order Number	.
Equipement Service	Electrical Instrumentation Jumper Connector
Client Name	DOE - Hanford Site
Project Title	River Protection Project - Waste Treatment Plant
Project Location	Richland, WA
PDC Log Number	24590 - QL - MRA - EWU0 - 00003 - ...

QTY.	Description	Dimension	No.	Material	Norm or article nb.

RVX25
ELECTRICAL CONNECTOR BLANK PLUG FOR SIZE 2 HOUSING
APPLICATION DRAWING

Scale	CAD	Date	By
1	Drawn	19-NOV-03	PASTORE
	Checked	19-NOV-03	SABA

This document is the exclusive property of STAUBLI corp. It is forbidden to use or communicate the information of this document without written authorization.

Type

STAUBLI CORPORATION, DUNCAN

S 011 494 03 A

General tolerance according to: . QUALITY: . Degree of surface finish unless specified : .

A3

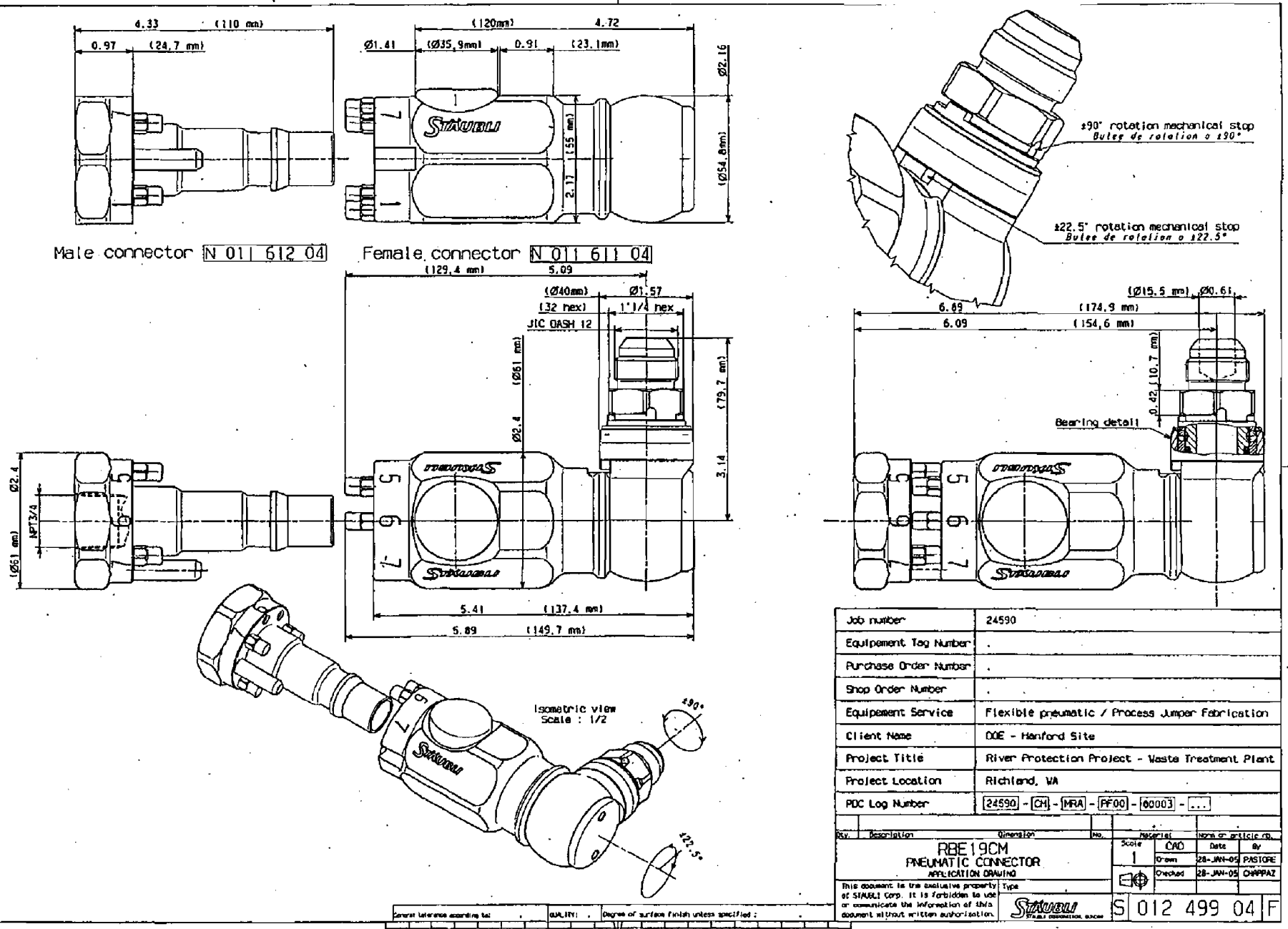

Job number	24590
Equipement Tag Number	.
Purchase Order Number	.
Shop Order Number	.
Equipement Service	Flexible pneumatic / Process Jumper Fabrication
Client Name	DOE - Hanford Site
Project Title	River Protection Project - Waste Treatment Plant
Project Location	Richland, WA
PDC Log Number	24590 - CHI - MRA - PF00 - 00003 - ...

Rev.	Description	Dimension	No.	Material	Norm or article no.

RBE19CM
PNEUMATIC CONNECTOR
APPLICATION DRAWING

Scale	CAD	Date	By
1	Drawn	28-JAN-05	PASTORE
	Checked	28-JAN-05	CHAPPAZ

Type

This document is the exclusive property of STAUBLI Corp. It is forbidden to use or communicate the information of this document without written authorization.

STAUBLI

S 012 499 04 F

General tolerance according to: . QUALITY: . Degree of surface finish unless specified : .

T-8

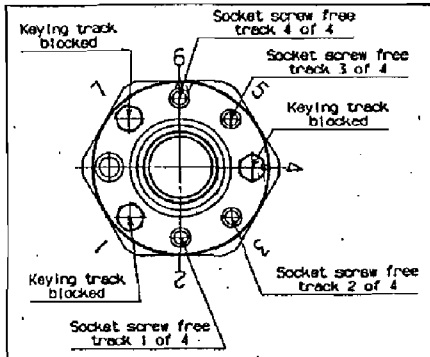

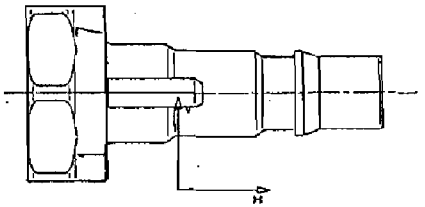

Plug

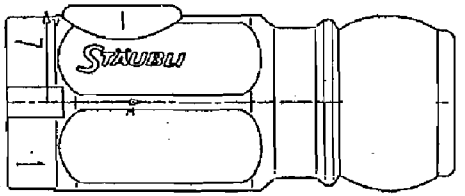

Socket

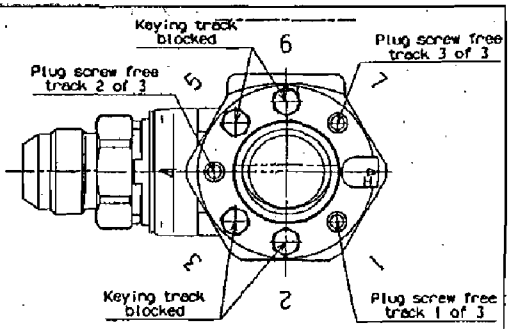

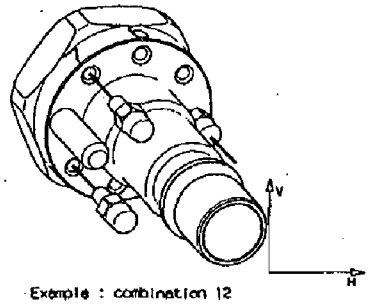

Example : combination 12

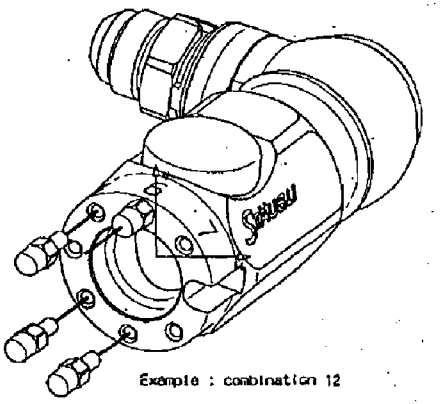

Example : combination 12

Comb.	Screw 1	Screw 2	Screw 3
01	Track 1	Track 2	Track 3
02	Track 1	Track 2	Track 4
03	Track 1	Track 2	Track 5
04	Track 1	Track 2	Track 6
05	Track 1	Track 2	Track 7
06	Track 1	Track 3	Track 4
07	Track 1	Track 3	Track 5
08	Track 1	Track 3	Track 6
09	Track 1	Track 3	Track 7
10	Track 1	Track 4	Track 5
11	Track 1	Track 4	Track 6
12	Track 1	Track 4	Track 7
13	Track 1	Track 5	Track 6
14	Track 1	Track 5	Track 7
15	Track 1	Track 6	Track 7
16	Track 2	Track 3	Track 4
17	Track 2	Track 3	Track 5
18	Track 2	Track 3	Track 6
19	Track 2	Track 3	Track 7
20	Track 2	Track 4	Track 5
21	Track 2	Track 4	Track 6
22	Track 2	Track 4	Track 7
23	Track 2	Track 5	Track 6
24	Track 2	Track 5	Track 7
25	Track 2	Track 6	Track 7
26	Track 3	Track 4	Track 5
27	Track 3	Track 4	Track 6
28	Track 3	Track 4	Track 7
29	Track 3	Track 5	Track 6
30	Track 3	Track 5	Track 7
31	Track 3	Track 6	Track 7
32	Track 4	Track 5	Track 6
33	Track 4	Track 5	Track 7
34	Track 4	Track 6	Track 7
35	Track 5	Track 6	Track 7

Comb.	Screw 1	Screw 2	Screw 3	Screw 4
01	Track 4	Track 5	Track 6	Track 7
02	Track 3	Track 5	Track 6	Track 7
03	Track 3	Track 4	Track 6	Track 7
04	Track 3	Track 4	Track 5	Track 7
05	Track 3	Track 4	Track 5	Track 6
06	Track 2	Track 5	Track 6	Track 7
07	Track 2	Track 4	Track 6	Track 7
08	Track 2	Track 4	Track 5	Track 7
09	Track 2	Track 4	Track 5	Track 6
10	Track 2	Track 3	Track 6	Track 7
11	Track 2	Track 3	Track 5	Track 7
12	Track 2	Track 3	Track 5	Track 6
13	Track 2	Track 3	Track 4	Track 7
14	Track 2	Track 3	Track 4	Track 6
15	Track 2	Track 3	Track 4	Track 5
16	Track 1	Track 5	Track 6	Track 7
17	Track 1	Track 4	Track 6	Track 7
18	Track 1	Track 4	Track 5	Track 7
19	Track 1	Track 4	Track 5	Track 6
20	Track 1	Track 3	Track 6	Track 7
21	Track 1	Track 3	Track 5	Track 7
22	Track 1	Track 3	Track 5	Track 6
23	Track 1	Track 3	Track 4	Track 7
24	Track 1	Track 3	Track 4	Track 6
25	Track 1	Track 3	Track 4	Track 5
26	Track 1	Track 2	Track 6	Track 7
27	Track 1	Track 2	Track 5	Track 7
28	Track 1	Track 2	Track 5	Track 6
29	Track 1	Track 2	Track 4	Track 7
30	Track 1	Track 2	Track 4	Track 6
31	Track 1	Track 2	Track 4	Track 5
32	Track 1	Track 2	Track 3	Track 7
33	Track 1	Track 2	Track 3	Track 6
34	Track 1	Track 2	Track 3	Track 5
35	Track 1	Track 2	Track 3	Track 4

* For each combination the 7 screws must be installed.
* Screws thread lock : Loctite F2432
* Torque : 9.5 N.m

Job number	24590
Equipement Tag Number	.
Purchase Order Number	.
Shop Order Number	.
Equipement Service	Flexible pneumatic / Process Jumper Fabrication
Client Name	DOE - Hanford Site
Project Title	River Protection Project - Waste Treatment Plant
Project Location	Richland, WA
POC Log Number	24590 - CM - MRA - PF00 - 00003 - ...

N.Ref	Designation	Dimension	Rep.	Matière	Norme ou N° d'article

RBE19CM

Key combination sheet and assembly instructions

Echelle	CAO	Date	Visa
1	Dessiné	10-JAN-05	PASTORE
	Controlé	10-JAN-05	CHAPPAZ

Ce document est la propriété exclusive de STAUBLI FAVERGES . Il est interdit d'en faire usage ou de le communiquer sans son autorisation écrite .

Type

Staubli Faverges

S 001 228 05 A

Tolérances générales selon :

Qualité (critères)

Degré de fournitude sauf indications spéciales:

A2

T-1

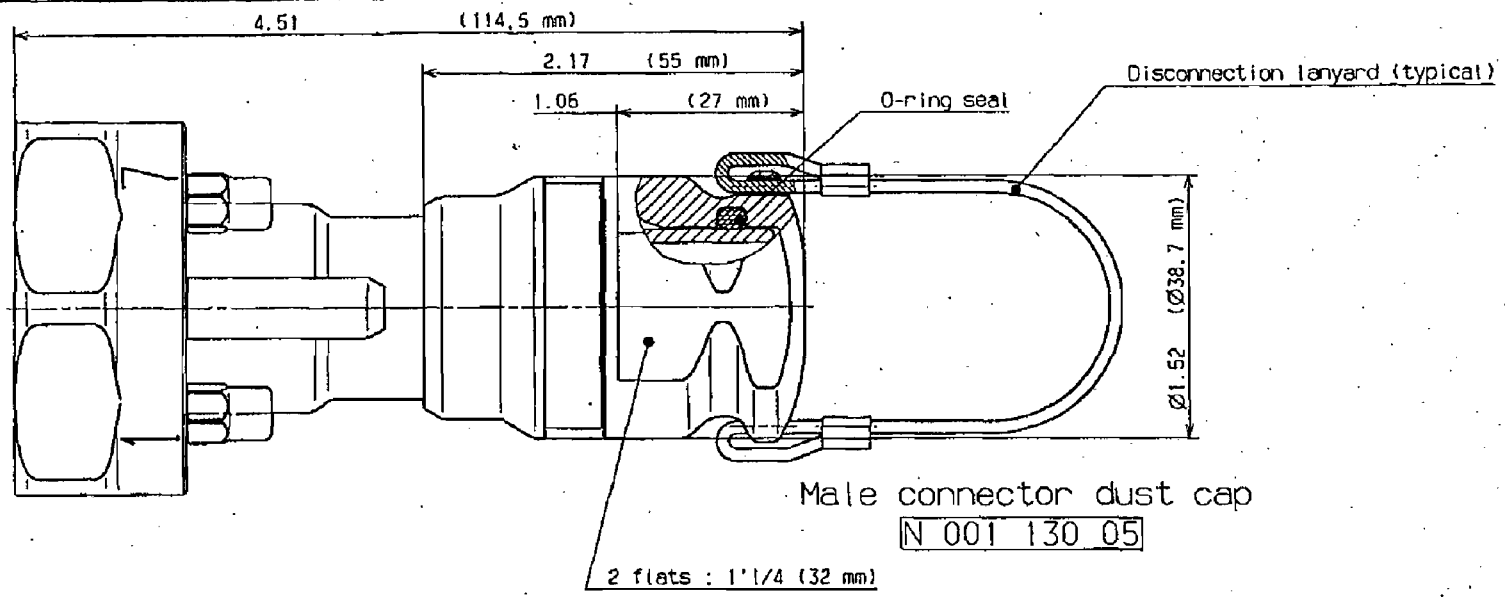

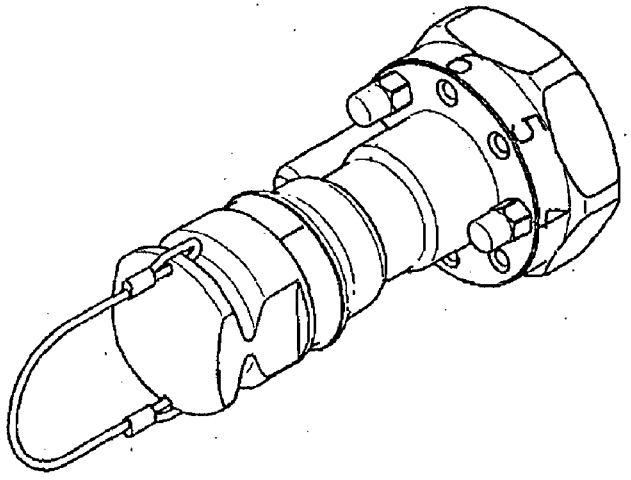

Job number	24590
Equipement Tag Number	.
Purchase Order Number	.
Shop Order Number	.
Equipement Service	Flexible pneumatic / Process Jumper Fabrication
Client Name	DOE - Hanford Site
Project Title	River Protection Project - Waste Treatment Plant
Project Location	Richland, WA
PDC Log Number	24590 - CM - MRA - PF00 - 00003 - ...

Qty.	Description	Dimension	No.	Material	Norm or article nb.

RBE19CM
PNEUMATIC CONNECTOR DUST CAP
APPLICATION DRAWING

Scale	CAD	Date	By
1	Drawn	28-JAN-05	PASTORE
	Checked	28-JAN-05	CHAPPAZ

This document is the exclusive property of STAUBLI Corp. It is forbidden to use or communicate the information of this document without written authorization.

Type

STAUBLI CORPORATION, DUNCAN

S 001 197 05 B

General tolerance according to: . QUALITY: . Degree of surface finish unless specified : .

A3

T-10

T-11

PRODUCT APPLICATION SHEET
RBE 19 CM

APPLICATION

Remotely operated fluid connector for radioactive environment designed to allow a high number of keying possibilities set on site.

CONNECTION:

1. The three sets of opposed flats on the female housing allow the manipulator jaws to grab and index the connector during operation.
2. The staged guiding helps in addressing the misalignment between the male and female connector.
3. The visual pre-guiding helps the operator to position the indexation.
4. The indexation operates before the safety keys.
5. The safety keying will then allow connection only if the female connector configuration matches the male one. (***picture 2*** : safety keying, ***picture 3*** : purple screw unmatches the gray one)
6. The connection can now be completed by the automatic locking mechanism (no need to operate the locking mechanism during connection). Once the indexing is made the connectors can be pushed using the flat area located on the elbow.

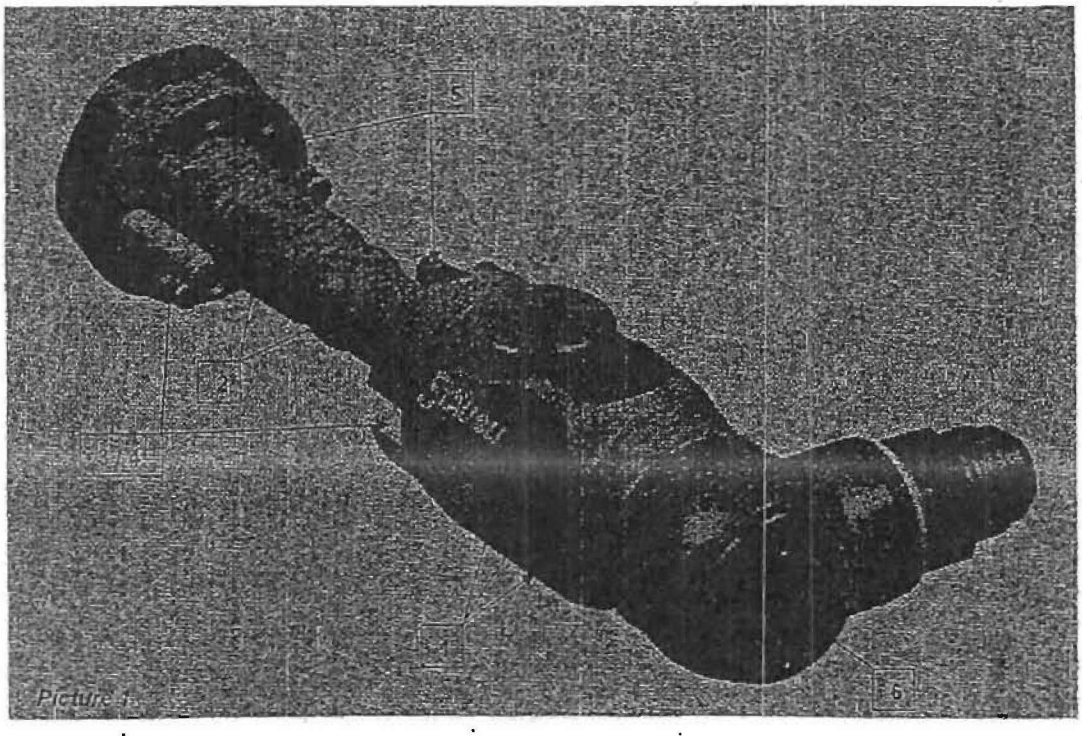

Picture 1

This document is the exclusive property of STAUBLI Corp. It is forbidden to use or comunicate the information of this document without written authorization.

Written : Pastore	Le : 28/01/05	Checked : Chappaz	Le : 28/01/05
STÄUBLI	S	111 610 04	D

T-12

DISCONNECTION:

Directly push the release button for disconnection.

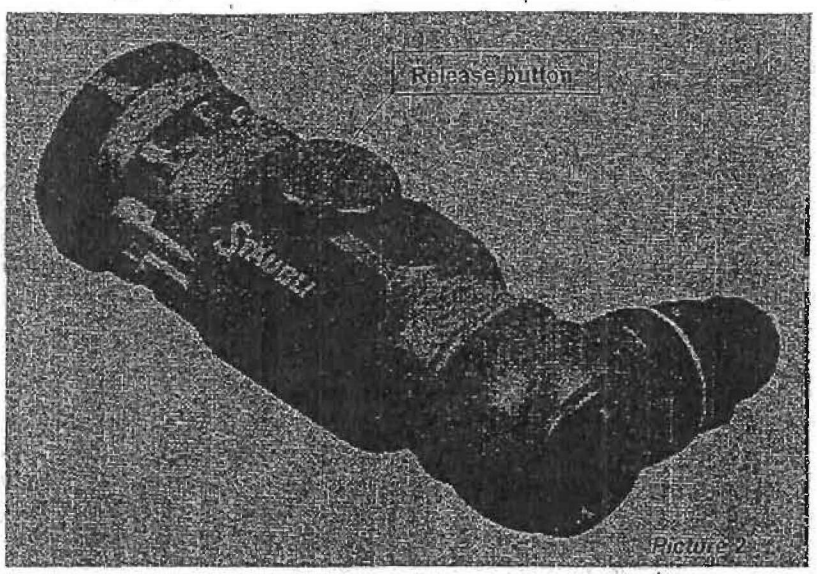

Picture 2

KEYING:

The connector will supply a total number of 35 non-interchangeable keys. The operator assembling the male and female connector sets all keys on site.

- **Male connector** (plug) setting is described on ***picture 1 and 3***. 3 screws take place among 7 possible locations (location number engraved on the body).
- **Female connector** (socket) setting works the opposite way using screws taking place in the remaining locations (location number engraved on the body).

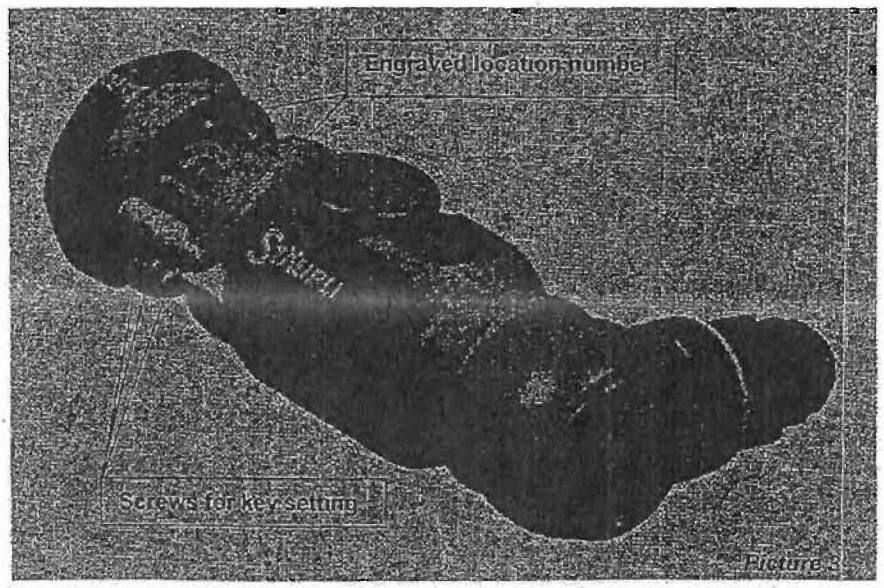

Picture 3

This document is the exclusive property of STAUBLI Corp. It is forbidden to use or comunicate the information of this document without written authorization.

Written : Pastore	Le : 28/01/05	Checked : Chappaz	Le : 28/01/05

STAUBLI S 111 610 04 D

T-13

FITTINGS AND MOUNTING:

- Female connector (socket) has a male JIC DASH12 threaded end fitting. A rotating 90° backshell assembly allows a free angular positionning according to the 2 rotations axis *(See picture 4)*
- Male connector (plug) has a female threaded connection with a 3/4" NPT.

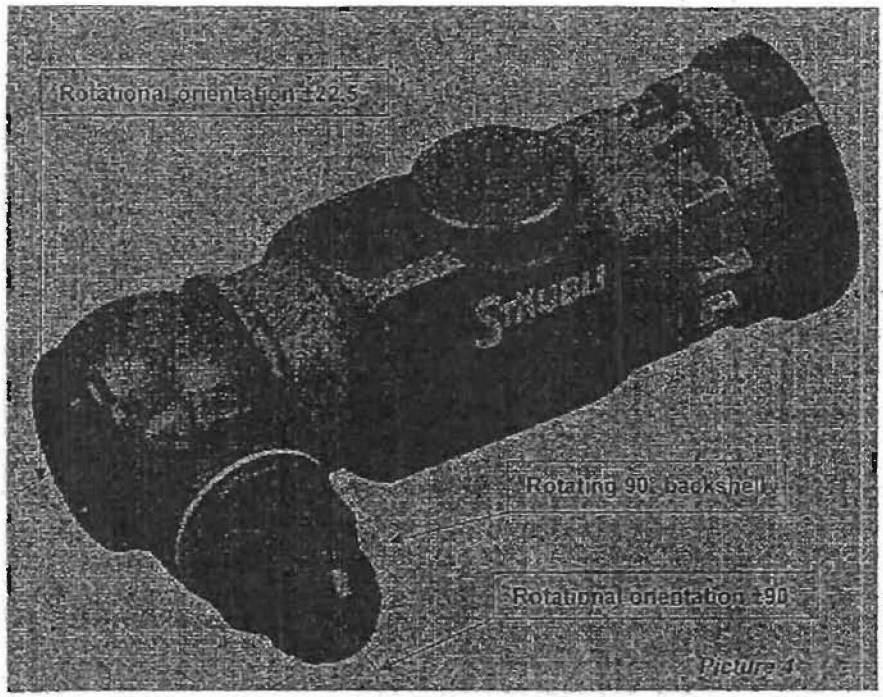

Picture 4

DUST CAP:

Disconnected plug will be protected with a dust cap.

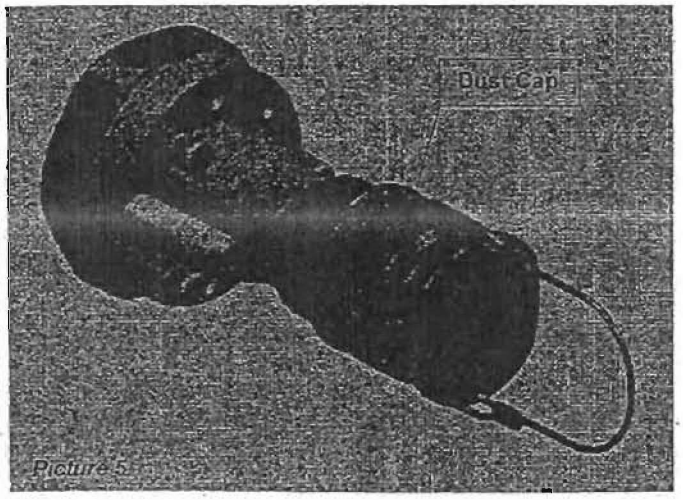

Picture 5

This document is the exclusive property of STAUBLI Corp. It is forbidden to use or comunicate the information of this document without written authorization.

Written : Pastore	Le : 28/01/05	Checked : Chappaz	Le : 28/01/05
STÄUBLI	S	111 610 04	D

T-14

MATERIALS:

Mechanical connector is 316L stainless steel with ethylene propylene soft O-ring seals.

TECHNICAL FEATURES

• Working temperature	-25°C + 150°C (-4°F up to 302°F)
• Socket valving	unvalved
• Plug valving	unvalved (straight through bore)
• Seals lubrication	STÄUBLI G 0 lubricant (validated for use in nuclear environment by E.D.F)
• Plug weight	0.550 Kg (1.25 Lb)
• Socket weight	1.800Kg (3.97 Lb)
• Dust cap weight	0.300 Kg (0.66 Lb)
• Connection strength	80N (without pressure)
• Disconnection strength	90N (without pressure)
• Identification	Manufacturer's name, part number and week and year of manufacturing engraved on male and female connectors
• Packaging	Single unit in sealed plastic bag.

PARTNUMBERS

Part number	Description
N 011 611 04	Female connector
N 011 612 04	Male connector
N 001 130 05	Male connector dust cap

Stäubli reserves the right to modify product without prior notice.
This technical data sheet has been issue for a given job; therefore this document cannot be reproduced nor disclosed without Stäubli's written authorization.

This document is the exclusive property of STAUBLI Corp. It is forbidden to use or comunicate the information of this document without written authorization.

Written : Pastore	Le : 28/01/05	Checked : Chappaz	Le : 28/01/05

STÄUBLI S 111 610 04 D

T.2 Reboiler Grayloc Backing Plate

Design Input: It is acceptable design that the Grayloc backing plates for the 24" diameter process inlet of the reboilers FEP-RBLR-00001A/1B and TLP-RBLR-00001 can be installed after reboiler has after reboiler has been transported through airlock (inside hotcell). Furthermore, the Grayloc backing plate for the 18" diameter steam inlet of the reboiler TLP-RBLR-00001 can also be installed after the TLP reboiler has been through airlock.

T.3 Floor loading

Design Input: The uniform load is defined as floor loading transmitted by the skid to the floor without spreading of the load out through the supporting concrete slab. The floor loadings listed in the table below has been determined to be acceptable.

Allowable Uniform Floor Loading Directly Under Skid Footprint

Equipment	Location	Weight (Operating + Skid) (lbs)	Skid Foot Print Floor Area (ft^2)	Uniform Load (Operating) (lbs/ft^2)
FEP-SEP-00001A	J : 8-9 (0'-0")	134,500	400	**336**
FEP-SEP-00001B	J : 10-11 (0'-0")	134,500	400	**336**
TLP-SEP-00001	D : 18 (0'-0")	134,500	400	**336**
FEP Condenser Skid A	K-L : 8 (56'-0")	70,000	179	**391**
FEP Condenser Skid B	K-L : 10-11 (56'-0")	70,000	179	**391**
TLP Condenser Skid	D-E : 19-20 (56'-0")	70,000	179	**391**
FEP-VSL-00005	M : 7-8 (0'-0")	45,100	66	**683**
TLP-VSL-00002	B : 24-25 (0'-0")	24,000/4	1	**6000**
AFR-TK-00001	G-H : 9-10 (77'-0")	24,000	40	**600**
AFR Pump Skid	G-H : 9-10 (77'-0")	415	12	**35**

Note: Uniform load (lbs/ft^2) = Total Equipment Weight (lbs) / Foot Print Area (ft^2)

T.4 Surface Finish for Equipment in the Hot Cell

Design Input #1: A surface finish of 125 micro-inches is required for non-rotating parts such as reboiler, support stands, recirculation pump, recirculation piping, and lifting yokes. The surface finish of 125 micro inches shall be applied to machined surfaces not all surfaces

Design Input #2: A surface finish of 63 micro-inches is required for rotating parts such as pump shaft and impeller.

T.5 Manipulator Capability for Separator Vessel Head Crane

Design Input: There will be no manipulator capability for the crane on the 56-ft elevation for separator vessel head removal. The current plan is to install a monorail and hoist when there is a need to replace separator demister pads.

T.6 Axial Flow Pump ASDs

Design Input: The ASDs for FEP-PMP-00009A/9B will be installed in the MCC room P-417 on the 77'-0" elevation and the ASD for TLP-PMP-00009 will be installed in the MCC room P-0315 on the 56'-0" elevation. These MCC rooms are designed as R2/C2 as shown on the drawings 24590-PTF-P01T-00003 and 24590-PTF-P01T-00004. The temperature range for these MCC rooms is between 59-113 °F and the humidity range of 5 - 85 %.

T.7 Instrumentation

Design Input #1 - Final Instrument Location Drawings:

Seller is no longer required to provide instrument location and mounting information on the datasheet. Instrument location and mounting information will be completed by Buyer as required on the data sheets.

Design Input #2 - BNI Instrument Details:

Seller is no longer required to provide loop drawings that include schematic and wiring information. BNI will use Set Route and Intools for wiring information. For the 60% design stage, Seller is not required to provide environmental criteria, manufacturer or manufacturer's model number since they will be addressed at the 90% design milestone. Seller shall provide the following I&C information at 60% design:

1) An Instrument Index that includes the type of instrument, service description, calibration range, tag number, signal type, P&ID number and data sheet number.

2) Data Sheets as supplied with the contract package completed with as much information as is available, including tag numbers, calibration range, instrument range and specific process parameters, etc.

3) Logic diagrams which complement the system description.

T.8 Off-gas piping Condenser Intra-Skid Piping

Design Input: No insulation is required for off-gas piping and condenser intra-skid piping. These pipes are in restrictive rooms where no personnel enter during evaporator system operations.

T.9 Separator Vessels

Design Input #1: Separator Vessel Lower Frame:

No internal components are allowed except the use of Nelson studs on the lower ten inches of the inside surface. Seller shall provide minimum amount of grouting requirements to provide adequate stiffness for the lower frame of solid ring of 18-inches high and 19-feet square

Design Input #2: External Ring for Spray Nozzles:

Seller shall design and provide external rings for both the upper and lower demister pad spray nozzles. These external rings shall be connected together to provide an accessible connection at approximately 48'-0" plant elevation.

T.10 FEP Condensate vessel

Design Input: Seller shall provide a separate FEP condensate vessel support ring plate to interface properly with floor embeds. The ring plate will be field welded to embedded plates on both sides. Vessel skirt will be filed welded to ring plate at exterior face only with partial penetration and fillet welds.

T.11 Equivalent Lengths for Centrifugal Pumps

The piping equivalent length is provided on the table below for pump sizing calculation. Please be advised that the bounding values have incorporated the line size changes. However, the flow resistance due to flow restriction orifice, backpressure control valve, discharge spray nozzle has not incorporated into the bounding values because they are to be sized by Seller. Seller shall include these flow resistance in their pump sizing calculation.

For discharge lines from pumps TLP-PMP-00002A/B to separator vessel (TLP-SEP-00001) and from pumps FEP-PMP-00006A/B, FANP shall also add a flow resistance of 5 psi due to Millipore filter in the calculation. For discharge line from TLP-PMP-00005A/B to sampler, Seller shall also include sample delivery pressure of 5 psig.

	Description	From	To	Straight Runs	Elevation Change	Elbows (LR 90)	Eq. Length	Tees	Eq. Length	Valves	Eq. Length	Exits	Eq. Length	Entrances	Eq. Length	Other	Totals (ft) (EQ.L.)	Totals (ft) (AEL.)	Bounding Values (ft) (EQ.L.)	Bounding Values (ft) (AEL.)	Notes
TLP-PMP-00002A/B	Suction	TLP-VSL-00002	Pump	30	2	5	33	1	20	4	20	0	0	1	9	0	112	2	150	2	
	Discharge	Pump	TLP-VSL-00002	40	15	5	25	2	30	4	15	1	13	0	0	50	173	15	250	20	1
			RLD-TK-00006A/B	250	60	25	125	4	60	8	30	1	13	0	0	50	528	60	625	65	2
			TLP-VSL-00009A/B	250	60	25	125	4	60	8	30	1	13	0	0	50	528	60	625	65	2
			TLP-SEP-00001	250	60	25	125	3	45	10	38	0	0	0	0	50	508	60	600	65	3, 4
TLP-PMP-00011A/B	Suction	TLP-SEP-00001	Pump	100	5	5	25	1	15	3	11	0	0	1	7	0	158	5	250	5	
	Discharge	Pump	TCP-VSL-00002	300	60	15	50	1	10	3	8	1	9	0	0	0	376	60	450	65	
TLP-PMP-00005A/B	Suction	TLP-VSL-00009A/B	Pump	80	4	8	40	2	30	5	13	0	0	1	7	0	169	4	200	4	
	Discharge	Pump	TLP-SEP-00001	125	15	15	38	3	22.5	2	4	1	7	0	0	0	195	10	250	15	
			SAMPLER	180	70	15	50	2	20	3	8	0	0	0	0	0	258	70	300	70	5
FEP-PMP-00006A/B	Suction	FEP-VSL-00005	Pump	15	2	5	33	1	20	3	15	0	0	1	9	0	92	2	125	2	
	Discharge	Pump	FEP-VSL-00006	25	20	7	35	2	30	6	19	1	13	0	0	50	172	20	250	25	1
			RLD-TK-00006A/B	1100	60	50	250	6	90	8	30	1	13	0	0	50	1533	60	1750	65	2
			FEP-VSL-00017A/B	550	60	35	175	4	60	6	23	1	13	0	0	50	871	60	1000	65	2
			FEP-SEP-00001A/B	600	60	35	175	3	45	10	38	0	0	0	0	50	908	60	1100	65	3, 4

Notes: Framatome Needs to also consider flow resistances due to...
1. Flow Restriction Orifice (sized by FANP)
2. Back Pressure Control valve (sized by FANP)
3. Milli-pore filter (max dP = 5 psi)
4. Discharge spray nozzle pressure (specified by FANP)
5. Sample Delivery pressure of 5 psig.

T.12 Equivalent Lengths for Roth Transfer Station Pump

The equivalent length is provided in the table below:

Description	From	To	Bounding values (ft)	
			EQ. L	ΔEL
Discharge	FEP A SKID 9A Pump	SCW Storage Tank	2200	60
Discharge	FEP A SKID 9A Pump	Steam Cond. Skid 6A	600	80
Discharge	FEP B SKID 9B Pump	SCW Storage Tank	2000	60
Discharge	FEP B SKID 9A Pump	Steam Cond. Skid 6B	700	80
Discharge	TLP SKID Pump	SCW Storage Tank	720	60.
Discharge	FEP B SKID 9A Pump	Steam Cond. Skid 8	1130	100

T.13 Standard Kick-Off Plate

Design Input: Buyer will provide Seller 2" and 4" PUREX nozzle with square standard kick-off plate per drawing 24590-WTP-M61-P23T-00040 for FEP/TLP reboilers.

R10328035

RIVER PROTECTION PROJECT – WASTE TREATMENT PLANT

ENGINEERING SPECIFICATION

ISSUED BY RPP-WTP PDC INIT DATE 6/28/04

FOR

Cesium Nitric Acid Recovery Forced Circulation Vacuum Evaporator System

GERALD RUSSEL CHIARAMONTE STATE OF WASHINGTON 028043 REGISTERED PROFESSIONAL ENGINEER 6-28-04

EXPIRES: 11/9/ 04

This bound document contains a total of 75 sheets.

Content applicable to ALARA? ☒ **Yes** ☐ **No**

ADR No. N/A **Rev**

NOTE: Contents of this document are Dangerous Waste Permit affecting.

Quality Designator
QL
DOE Contract No. DE-AC27-01RV14136

REV	DATE	REASON FOR REVISION	BY	CHECK	REVIEW	QA	APEM/DEM
0	6/28/04	Issued for Permitting Use	J. Hickman	G. Butt	N/A	N/A	~~Chiaramonte~~ VOKE 6/28/04

SPECIFICATION No. 24590-PTF-3PS-MEVV-TP002 **Rev** 0

Notice

Please note that source, special nuclear, and byproduct materials, as defined in the Atomic Energy Act of 1954 (AEA), are regulated at the US Department of Energy (DOE) facilities exclusively by DOE acting pursuant to its AEA authority. DOE asserts, that pursuant to the AEA, it has sole and exclusive responsibility and authority to regulate source, special nuclear, and byproduct materials at DOE-owned nuclear facilities. Information contained herein on radionuclides is provided for process description purposes only.

Contents

Notice ii
1 Scope 1
1.1 Project Description and Location 1
1.2 Equipment, Material, and Services Required 1
1.3 Work by Others 7
1.4 Definitions 8
1.5 Mechanical Data Sheets 12
1.6 Safety/Quality/Seismic Classifications 12
2 Applicable Documents 13
2.1 General 13
2.2 Codes and Industry Standards 13
2.3 Reference Documents 14
2.4 Reference Drawings / Data Sheets 16
3 Design Requirements 18
3.1 General 18
3.2 Basic Function 21
3.3 Performance 21
3.4 Design Conditions 22
3.5 Environmental Conditions 23
3.6 Recirculation Pumps 24
3.7 Reboiler 25
3.8 Evaporator Separator Vessel 26
3.9 Rectifier 27
3.10 Primary Condenser 28
3.11 Secondary Condenser System 28
3.12 Mechanical Handling Requirements 29
3.13 Loadings 30
3.14 Electrical Requirements 31
3.15 Instrumentation and Control Requirements 31
3.16 Lifting Requirements 32
3.17 Accessibility and Maintenance 33
4 Materials 35
4.1 Positive Material Identification 35

Contents

4.2 Construction 35
4.3 Vessels 36
4.4 Pipework 36
4.5 Prohibited Materials 36
4.6 Storage of Special Materials (e.g., stainless steel) prior to work 36
5 Fabrication 36
5.1 General 37
5.2 Welding 37
6 Inspections and Examinations 38
6.1 Nondestructive Examinations 38
6.2 Dimensional Inspections 38
6.3 Visual Weld Inspections 38
6.4 Liquid Penetrant Test 39
6.5 Radiography 39
6.6 Final Inspection 40
6.7 Inspection and Test Status 40
6.8 Control of Nonconforming Items 40
7 Testing 40
7.1 Shop Tests 40
7.2 Integrated Acceptance Tests 41
8 Preparation for Shipment 42
8.1 General Requirements 42
8.2 Painting 43
8.3 Tagging 43
9 Quality Assurance 44
9.1 General Commercial Designation (CM) Requirements 44
9.2 Quality Level (QL) Requirements 44
10 Configuration Management 45
11 Documentation and Submittals 45
11.1 General 45
11.2 Calculations 46
11.3 As-Built Drawings 46
11.4 Dimensional Record Drawings 46
11.5 Project Start 46

Contents

11.6 30 % Design Review 47
11.7 60 % Design Review 47
11.8 90 % Design Review 48
11.9 Final Design Review 53

Appendices

A	Evaporator Stream Data		A-1
B	CNP Nitric Acid Recovery Forced Circulation Vacuum Evaporator Thru-Put Flow Chart		B-1
C	Evaporator Process Data		C-1
D	Separator Vessel Skid Embed Layout		D-1
E	Hot Cell Remote Impact Wrench		E-1
F	Evaporator Equipment Skids Location and Layout Sketches		F-1
G	Minimum Nozzle Design Loads		G-1
H	Evaporator Equipment General Arrangement		H-1

1 Scope

1.1 Project Description and Location

The Hanford Tank Waste Treatment and Immobilization Plant (WTP) is a complex of waste treatment facilities where the US Department of Energy (DOE) Hanford Site tank waste will be pretreated and immobilized into stable glass form via vitrification. The WTP Contractor will design, build, and startup the WTP pretreatment and vitrification facilities for the DOE Office of River Protection (ORP). The waste treatment facilities will pretreat and immobilize the low-activity waste (LAW) and high-level waste (HLW) currently stored in underground storage tanks at the Hanford Site.

The Hanford Site occupies an area of about 560 square miles and is located along the Columbia River, north of Richland, WA in the U.S.A. The WTP Facility will be constructed at the east end of the 200 East Area of the Hanford Site. The counties of Benton, Franklin, and Grant surround the Hanford Site.

1.2 Equipment, Material, and Services Required

This specification provides the requirements for the design, analysis, fabrication, quality assurance, inspection, testing, qualification, and labeling of one forced circulation vacuum evaporator system Cesium Nitric Acid recovery. This specification also provides the requirements for the supply of services, manuals, instructions, procedures, and other associated documentation.

The scope of work for the Seller includes all work defined in this specification and its addenda and attachments. Work shall include, but is not limited to, the following:

1.2.1 Provide fully detailed designs, drawings, diagrams, supporting calculations, supporting analyses, operating & maintenance procedures, installation instructions, and all labor, materials, equipment, and services necessary to manufacture, test, inspect, label and package one forced circulation vacuum evaporator system, including handling and servicing equipment, all fabricated to appropriate NQA-1 requirements in accordance with all specification requirements, with the deliverables being reports, calculations, procedures, data sheets, drawings and diagrams as outlined in this specification and the Material Requisition (MR). Refer to table below for what shall be included as part of evaporator system to be provided.

Equipment	Tag
One (1) Separator Vessel. Includes spraybars above and below the mesh pad, nozzles, and vessel support pads.	CNP-EVAP-00001
One (1) internal deentrainment separation system	Included above
One (1) stainless steel structural support frame with anchorage for the separator vessel.	Not tagged
One (1) reboiler with inlet and outlet pipe ends welded to Buyer's supplied jumper nozzles. Includes structural support frame with anchorage for the reboiler.	CNP-HX-00001
One (1) recirculation pump including motor, mechanical seal, and adjustable speed drive. The pump inlet and outlet pipe ends welded to Buyer's supplied jumper nozzles. Includes structural support frame with anchorage for the pump.	CNP-PMP-00001
One (1) Rectifier vessel including internal trays. Includes structural support frame with anchorage for the rectifier.	CNP-DISTC-00001
One (1) primary condenser including tubes, tubesheet, nozzles, saddles, mounted on condenser skid with anchorage.	CNP-HX-00002
One (1) Inter-Condenser including tubes, tubesheet, nozzles, and piping connecting to primary condenser and after-condenser mounted on condenser skid with anchorage.	CNP-HX-00003
One (1) After-Condenser including tubes, tubesheet, and nozzles mounted on condenser skid with anchorage.	CNP-HX-00004
Two (2) Steam Ejectors include piping connecting to inter-condenser and after-condenser mounted on condenser skid with anchorage	CNP-EJCTR-00010A CNP-EJCTR-00010B
One (1) steam conditioning system skid (with anchorage). Skid contains pressure reducing valve and control and a desuperheater.	CNP-SKID-00003 "Note 1"
Lifting yokes for one (1) separator vessel, one (1) reboiler, and one (1) recirculation pump	"Note 1"

Note 1: Stainless steel or plastic tags (foil strip is not acceptable) shall be firmly attached by stainless steel wire or stainless steel screws to each separate item. Each tag shall be stamped with, as a minimum: (1) Purchase Order Number, (2) Purchase Order item number, and (3) Equipment/Instrument Tag number.

1.2.2 Provide a guarantee that all equipment listed in section 1.2.1 will perform in accordance with the requirements of this specification and all referenced codes, standards, and documentation in section 2 of this specification. Process warranty shall include demonstration of compliance of the Seller's provided evaporator system during testing per section 7.2 of this specification with the boil-off and decontamination factor requirements.

1.2.3 Perform sizing calculations and process performance modeling to ensure that each component of the evaporator system is properly specified.

1.2.4 Provide the nonreplaceable separator vessel and all internal parts (exception made for demister pad life)which shall attain a 40-year life.

1.2.5 Deleted.

1.2.6 Provide one (1) steam conditioning equipment skid necessary to reduce plant low-pressure steam of 40 psig and 286 °F to Seller's provided optimal saturated steam condition for reboiler operation. Provide specifications (i.e., pipe diameter, associated equipment and layout) for reboiler shell vacuum/vent line.

1.2.7 Deleted

1.2.8 Provide evaporator skids, equipment, components, and structural supports with the materials of construction as specified per this specification and on the attached data sheets in section 2 of the MR. The structural supports for evaporator equipment shall match with Buyer's provided embed layout and floor beams above.

1.2.9 Provide evaporator systems that accommodate the wall penetrations, piping layout, equipment dimension envelopes, and equipment locations as specified in Appendix F.

1.2.10 Provide stainless steel skid framing to match Buyer embed plates for the separator vessel. The vessel skid shall conform to the proposed embed layout dimensions shown in the Appendix D.

1.2.11 Provide below-the-hook lifting devices for installation, commissioning, and operation/maintenance of the demister pad assembly, reboiler, and recirculation pump. These will include lifting yokes, beams, fixtures, etc., according to Buyer design constraints for remote handling. Seller is also to provide all special lifting equipment and special tools required for installation and maintenance of the evaporator system.

1.2.12 Provide seismic analysis for evaporator structures, systems, and components. The analysis will include dynamic loading resulting from seismic excitation while the vessel is operating under normal operating conditions. Buyer will provide the appropriate seismic response spectra and damping values for the performance of the seismic analysis. The seismic qualification of the evaporator system equipment and components including anchorage to the facility structure shall be accomplished using Dynamic Analysis based on the characteristics and complexity of the equipment/components.

1.2.13 Provide the thermal and static stress analyses for the evaporator structures, systems, and components. Buyer will provide the necessary cyclic data for Seller to perform an assessment regarding the fatigue life of the equipment. However, Seller will be responsible for confirmation that the cyclic data has been accurately interpreted before proceeding with the component fatigue analysis. The Seller shall provide a fatigue analysis to support a 40 year design life for the evaporator system. The fatigue analysis shall include all calculations and all supporting data.

1.2.14 Identify all interfaces and requirements for external connections with equipment and services supplied by the Buyer. The interface system data parameters for use in each of the evaporator systems shall include, as a minimum, the following:

Inlet Conditions:

- High pressure steam (mass flow rate @ 109 psig)
- Low pressure steam (mass flow rate @ 40 psig)
- Service Water (flow rate)
- Instrument air (flow rate @ pressure)
- Cooling water (flow rate @ 75 °F)
- Operating electrical (kW)
- Installed electrical (kW)

Outlet Conditions:

- Steam Condensate (volumetric flow rate & temperature)
- Process Condensate (volumetric flow rate & temperature)
- Vent System (mass flow rate & temperature)
- Recirculation Loop (volumetric flow rate & temperature)
- Separator offgas (mass flow rate & temperature)
- Concentrated waste (volumetric flow rate & temperature)
- Rectifier offgas (mass & volumetric flow rate & temperature)
- Rectifier bottoms (volumetric flow rate & temperature)

1.2.15 Provide completed Instrument and Mechanical data sheets for all instruments and equipment in the 60 % design review package, utilizing Buyer's supplied instrument data sheet samples attached in the section 2 of the MR as templates. Buyer will procure the required instruments as detailed by the Seller's control documents (data sheets) for installation by others. Instrumentation shall conform to 24590-WTP-3PS-JQ07-T0001, *Engineering Specification for Instrumentation for Package Systems*. Seller's design may differ from the Buyer proposed evaporator Piping and Instrumentation sketches in Section 2 of the material requisition with Buyer's review

1.2.16 Provide the following for instrumentation and controls of Seller's supplied evaporator systems, equipment, and components to support Buyer's software development. Any effect that the evaporator control strategy has on equipment operating parameters (i.e., pump flow rates, line flushes, feed and concentrate takeoff strategies, temperature, or pressure) will be mutually agreed upon prior to being implemented into the design.

- P&IDs
- Completed Buyer's Instrument data sheets
- Instrument Control philosophies
- Instrument Logic Diagrams
- Functional descriptions
- Instrument index which includes control set points
- Control and sequencing requirements (logic narratives)
- Instrumentation and controls requirements for the CNP evaporator feed cycle and concentration & eluant recovery cycle (Buyer to procure).

1.2.17 Provide a reliability analysis and documentation for the evaporator system in accordance with the following:

1.2.17.1 A complete Failure Modes and Effects Analysis (FMEA) shall be performed on all the equipment that falls within Seller's scope of supply. This shall include associated components such as vessels, remote handling equipment, pumps that have electronic control systems used for process variability (e.g., flow rate). All support systems (e.g., power, air, water, steam, etc.) will be assumed to be 100 % reliable and will not be considered in the FMEA. Structural failure modes will be limited to seismic events, based on whatever seismic analyses have been performed to support the design. The FMEA shall follow in MIL-STD-1629A as close as possible. The equivalent standard actually used to perform the FMEA shall be provided as a reference (including version and year) at the 60 % design review. Also, an explanation shall be included to demonstrate how the standard has been applied. Failure modes for a reboiler are at least as follows: (1) pin hole, (2) crack, and (3) tube rupture. In addition, Seller shall indicate the possibility of the reboiler tube rupture without precursor of pin hole or crack. Determination of the possibility of reboiler tube rupture without a precursor of a pin hole or crack can be made with a qualitative argument based on fracture mechanics. No stress analysis or fracture mechanics calculations will be required to support the qualitative assessment. Failure modes for the remaining components covered by the FMEA shall be as determined by the Seller; however, the basis for the failure mode shall be specified.

1.2.17.2 Failure rate data for the purposes of an availability assessment (performed by Seller) will be derived using the following hierarchy:

- Supplier In-Service Data
- In-Service Data of similar equipment, preferably in similar applications
- Generic Documented Failure Rate Data – data taken from recognized data sources, e.g., Dexter & Perkins, NPRD 1995, etc.

The specific data source shall be provided at the 60 % design review

1.2.17.3 A remote maintainability analysis will be undertaken in concert with the Buyer. The analysis will address corrective maintenance activities and estimate the required maintenance for the reboiler and appurtenances.

1.2.17.4 A recommended spare parts list, operations manuals, and maintenance manuals shall be provided.

1.2.17.5 Assume operations are 8,760 operating hours per year.

1.2.18 Provide an analysis of operating life for separator vessel, including its internal demister pads, and feed distribution, reboiler, recirculation pump and rectifier. Justify all assumptions and references.

1.2.19 Provide structural support requirements and recommended support locations for the reboiler and recirculation pump (i.e., load points, areas that cannot be used as load points, weight distribution, and maximum weight, geometry of equipment, and location of center gravity). Equipment support locations shall be mutually agreed with the Buyer due to remote handling requirements in the hot cell. Seller shall provide final design and fabricate support frames for reboiler and recirculation pump.

1.2.20 Coordinate with Buyer to provide vessel lugs for attaching the structural supports, which also applies to the reboiler and recirculation pump.

1.2.21 Provide demonstration and recorded VHS format video tape for demister pad removal and replacement. Buyer shall be notified prior to demonstration.

1.2.22 Provide radiographic film with technique and reader sheets. Exposed film must be sent, along with a copy of the technique and reader sheets in accordance with section 3 of the MR. Film must be suitably packaged to preclude moisture and handling damage.

1.2.23 Provide any necessary special remote repair tools for the reboiler and recirculation pump. Special tools shall not include tools readily available in the commercial market. Also, provide a list of commercially available tools needed.

1.2.24 Deleted.

1.2.25 Provide personnel to perform dimensional measurements for the separator vessel, reboiler, and recirculation pump at the Seller's shop.

1.2.26 Provide certified reports for all components subject to any heat treatment during manufacture.

1.2.27 Provide procedures suggesting how the integrated testing of evaporator system functionality be conducted by Buyer at the Hanford jobsite per section 7.2 of this specification. Technical support for installation, testing and commissioning will be under a separate contract.

1.2.28 Provide design documents in progressively complete package form. Design reviews at 30 %, 60 %, 90 % and Final Design to resolve all outstanding issues are planned to include face-to-face discussions between Buyer's personnel and Seller's personnel at Buyer's location. Future meetings will be arranged after Design Review Package Materials have been reviewed and meeting agenda have been established. The discussions are intended to help establish/clarify interface points in system requirements, review design/design progress, design documents, exchange ideas/information, provide design direction. See G-321-E Form for document submittal requirements.

1.3 Work by Others

The following items are not the responsibility of the Seller:

1.3.1 Provide installation labor.

1.3.2 Provide equipment shipment, unloading and storage at Buyer's site.

1.3.3 Provide Instrumentation and controls (including installation). Provide Buyer internal standards for digital control system (DCS) equipment and will specify and procure the control system equipment based on the necessary I/O requirements detailed by Seller.

1.3.4 Deleted.

1.3.5 Generate control logic in Buyer standard format using the final control loop definitions, system interlocks and alarms, system control philosophies, and control and sequencing requirements provided by Seller.

1.3.6 Procure the DCS components. Buyer will provide the "Device" and "I/O" address of the serial communications link for each instrument for inclusion in the Instrument Index.

1.3.7 Perform remote handling verification testing for the reboiler, recirculation pump, and recirculation pipework jumper functionality at Buyer's site.

1.3.8 Provide the appropriate seismic response spectra and damping values for Seller to perform the evaporator equipment skid seismic analyses.

1.3.9 Deleted.

1.3.10 Provide heat tracing and any necessary uninterruptible power supplies.

1.3.11 Provide all valves (including control valves) located in the jumpers for remote maintenance in the R5/C5 hot cell.

1.3.12 Provide fabrication for all piping, and jumpers. This includes the piping connecting the separator vessel to the recirculation pump, the recirculation pump to the reboiler, and the reboiler to the separator vessel. The Buyer shall design and layout piping for the recirculation pipework. Layout acceptability will be mutually agreed upon between the Buyer and Seller.

1.3.13 Provide structural supports for the evaporator piping.

1.3.14 Provide hot cell process equipment platform (PEP) for the reboiler and recirculation pump.

1.3.15 Provide the necessary cyclic data for Seller to perform an assessment regarding the fatigue life of the equipment.

1.3.16 Deleted.

1.3.17 Provide all jumpers, jumper mounted equipment, and pipework connections to the separator vessel within the black cell.

1.3.18 Provide all pipework between Seller's provided skids (excluding piping connecting condensers and steam ejectors).

1.3.19 Provide specification of process and utility piping jumper interfaces and their locations.

1.3.20 Provide Jumper stack-up tolerance study.

1.3.21 Provide shielding for penetrations through the walls and floors.

1.3.22 Provide hot cell remote handling equipment (including impact wrenches and standard lifting equipment).

1.3.23 Provide eluate lute pot (CNP-VSL-00001).

1.3.24 Provide break pots (CNP-BRKPT-00001 and CNP-BRKPT-00002).

1.3.25 Provide Vessel Vent system.

1.3.26 Provide steam condensate collection vessel, pump, and eductor (refer to sec.1.2.7).

1.3.27 Provide CXP feed pumps (CXP-PMP-00001A/B).

1.3.28 Provide utility (i.e., air, steam, and cooling water) supply systems. However, Seller is responsible to provide steam conditioning skid for reboiler operation.

1.3.29 Interface drawings for evaporator equipment skids.

1.4 Definitions

1.4.1 *Skid:* A skid is a group of components that can be manufactured and installed as a unit. These skid units are structurally self-supporting, allowing the skid to be handled by crane. Whenever practical, skids will contain all the equipment associated with the process, including vessels, piping, and supports.

1.4.2 *ALARA:* As Low As Reasonably Achievable (ALARA) documentation requirements apply to systems, structures, and components (SSCs) that have the potential to affect radiation doses, contamination levels, or releases to the environment.

1.4.3 *Buyer's Representative(s)*: The Buyer's designee(s), who shall witness onsite operations at the Seller and sub-seller sites and perform onsite inspections and surveillances.

1.4.4 *Black Cell (R5/C5)*: is a sealed concrete structure containing very high radiation and contamination where human access is prohibited during the normal operating lifetime of the cell and maintenance is not performed in the cell.

1.4.5 *C1:* Uncontrolled Area.

1.4.6 *C2:* Controlled area. Personnel must be verified free of contamination prior to exit.

1.4.7 *C3:* Contamination classification for plant areas that are ordinarily free of contamination, but have the potential of being contaminated.

1.4.8 *C5:* Contamination classification for plant areas that are considered high contamination areas. Access to C5 areas is not permitted.

1.4.9 *Design Basis Earthquake (DBE):* A specification of the ground motion at the site. For the WTP site, the DBE is defined by horizontal and vertical acceleration response spectra anchored to a peak ground acceleration of 0.26g and 0.18g, respectively.

1.4.10 *Hot Cell (R5/C5):* A room that is restricted from personnel due to high levels of radiation and/or high levels of contamination. A hot cell is constructed with thick concrete walls usually lined internally with stainless steel sheet. Process equipment located in the hot cell is connected to wall nozzles using jumpers. Process equipment in the hot cell is skid mounted and designed for either remote maintenance using crane-mounted services or, preferably, no maintenance over the 40 year design life of the WTP.

1.4.11 *Important to Safety (ITS):* SSCs that serve to provide reasonable assurance that the facility can be operated without undue risk to the health and safety of the workers and the public. ITS encompasses the broad class of facility features addressed (not necessarily explicitly) in the top-level radiological, nuclear, and process safety standards and principles that contribute to the safe operation and protection of workers and the public during all phases and aspects of facility operations (i.e., normal operation as well as accident mitigation). ITS includes SSCs designated as Safety Design Class (SDC), Safety Design Significant (SDS), and Risk Reduction Class (RRC).

1.4.12 *Jumper:* A remotely removable section of pipework usually incorporating connector heads and some items of process equipment (i.e., valves, instruments, etc.).

1.4.13 *Commercial Material (CM)*: SSC items and associated services (those that are <u>not</u> designated as SDC or SDS) that are manufactured using standard commercial practices.

1.4.14 *Paragraph*: When a paragraph of this specification, referenced documents, referenced codes, or referenced standards is referenced in this specification, the paragraph referenced and all subparagraphs and sub-subparagraphs of the paragraph referenced shall be considered inclusive.

1.4.15 *Quality Level 1 (QL-1):* SDC items. NQA-1 (1989) compliance is required.

1.4.16 *Quality Level 2 (QL-2):* SDS items. QL-2 shall also be used to identify other items and activities for which NQA-1 (1989) compliance is required.

1.4.17 *Rad*: A unit of energy absorbed from ionizing radiation, equal to 100 ergs per gram or 0.01 joules per kilogram of irradiated material.

1.4.18 *Risk Reduction Class*: RRC SSCs are ITS SSCs that are neither SDC nor SDS.

1.4.19 *R1*: Unrestricted area.

1.4.20 *R2*: Radiation controlled area.

1.4.21 *R3:* Radiation classification for plant areas considered average. Contamination area requiring anti-contamination clothing for entry. At early design stages, when insufficient information is available regarding worker occupancy, an initial target radiation level of 2.5 mRad/hr is to be used for the R3 classification.

1.4.22 *R4:* Radiation area (maximum).

1.4.23 *R5:* Radiation classification for areas considered to be high or very high radiation areas.

1.4.24 *Safety Design Class (SDC):* SSCs that, by performing their specified safety function, prevent workers or the maximally exposed member of the public from receiving a radiological exposure that exceeds the accident exposure standards defined in the Safety Requirements Document (SRD). SDC also applies to those features that, by functioning, prevent the worker or maximally exposed member of the public from receiving a chemical exposure that exceeds the ERPG-2 (AIHA 2001) chemical release standard. Those features credited for the prevention of a criticality event are also designated as SDC.

1.4.25 *Safety Design Significant (SDS)*: SSCs needed to achieve compliance with the radiological or chemical exposure standards for the public and workers during normal operation; and SSCs that can, if they fail or malfunction, place frequent demands on or adversely affect the function of SDC SSCs.

1.4.26 *Seismic Category I (SC-I):* Equipment/tanks important to safety, which have a seismic safety function. For the design of Seismic Category I equipment/tanks, no credit for inelastic energy absorption is allowed. Seismic Category I equipment/tanks shall be functional during and after a Design Basis Earthquake (DBE).

1.4.27 *Seismic Category II (SC-II):* Equipment/tanks important to safety whose failure during a seismic event could prevent a Seismic Category I structure, system, or component (SSC) from performing its seismic safety function. For the design of Seismic Category II equipment/tanks, credit for inelastic energy absorption is allowed. Seismic Category II equipment/tanks shall maintain control and confinement of hazardous materials during and after a Design Basis Earthquake (DBE), but do not need to be functional.

1.4.28 *Seismic Category III Equipment (SC-III):* (a) SDC and SDS SSCs that do not have a natural phenomena hazard (NPH) safety function. (b) SSCs that have a seismic safety function solely because they protect workers and members of the public from exposure to chemical hazards. (c) RRC SSCs that provide primary

confinement of significant inventories of radioactive materials, but in amounts less than quantities that require an SDC or SDS designation.

1.4.29 *Seismic Category IV (SC-IV)*: RRC SSCs that have been designated as RRC do not provide primary confinement of significant inventories of radioactive materials.

1.4.30 *Special Tools:* Any tooling which is not commercially available required to perform maintenance on the evaporator system.

1.4.31 *Acronyms*

- ALARA As Low As Reasonably Achievable
- AISC American Institute of Steel Construction
- ANSI American National Standards Institute
- ASD Adjustable Speed Drive
- ASD Manual of Steel Construction (Allowable Stress Design)
- ASME American Society of Mechanical Engineers
- ASNT American Society of Nondestructive Testing
- ASTM American Society for Testing and Materials
- AWS American Welding Society
- CCTV Closed Caption Television
- CFR Code of Federal Regulations
- CM Commercial grade
- CNP Cesium Nitric Acid Recovery Process
- CXP Cesium Ion Exchange Process
- DBE Design Basis Earthquake
- DOE US Department of Energy
- DOT Department of Transportation
- DPRS Demister Pad Removal System
- FEP Waste Feed Evaporator Process System
- GPM Gallons per minute
- HLW High Level Waste
- ERPG Emergency Response Planning Guidelines
- ITS Important to Safety
- IX Ion Exchange
- LAW Low-Activity Waste
- M Molarity
- MDS Mechanical Data Sheet
- MR Material Requisition
- MSDS Material Safety Data Sheet
- NDE Nondestructive Evaluation/Examination
- NPS Nominal Pipe Size
- NQA Nuclear Quality Assurance
- ORP DOE Office of River Protection
- PEP Process Equipment Platform
- PMI Positive Material Identification
- P&ID Piping and Instrumentation Diagram
- PTF Pretreatment Facility

- PWD Plant Wash and Disposal System
- QA Quality Assurance
- QAP Quality Assurance Program
- QAM Quality Assurance Manual
- QL Quality Level
- RRC Risk Reduction Class
- SBS Submerged Bed Scrubber
- SDC Safety Design Class
- SDS Safety Design Significant
- SC Seismic Category
- SSCs Structures, Systems, and Components
- RPP-WTP River Protection Project-Waste Treatment Plant
- TID Total Integrated Dose
- TEMA Tube and Exchanger Manufacturer's Association
- SDDR Supplier Deviation Disposition Request
- SG Specific Gravity
- UBC Uniform Building Code
- VT Visual Test
- WT % Weight percent
- WTP Hanford Tank Waste Treatment and Immobilization Plant

1.5 Mechanical Data Sheets

Specific design parameters and requirements for evaporator components will be shown on the individual Mechanical Data Sheet (MDS) in section 2 of the MR. The data shall be considered as preliminary. Seller shall verify thermal, hydraulic, mechanical and process designs. Where necessary, the Seller shall change the data in order to furnish complete thermal, hydraulic, mechanical, and process guarantees, including loads (Dead, operation and seismic) to structural members. Any difference between Seller's final design and Buyer's preliminary data shall be brought to Buyer's attention for resolution and approval. Seller shall supply evaporator components that meet specified materials of construction, quality level, and seismic category as described on the MDS. The nominal feed chemistries used for the design should be based on Appendix A of this specification. Process design of the evaporator system is given in Appendix C of this specification.

1.6 Safety/Quality/Seismic Classifications

1.6.1 The quality level (QL) and seismic category (SC) of the major components of the evaporator system are specified on the data sheets and attachments in section 2 of the MR.

1.6.2 Seismic category (SC) classification requirements are specified in 24590-WTP-3PS-SS90-T0001, Specification for Seismic Qualification of Seismic Category I/II Equipment and Tanks and 24590-WTP-3PS-FB01-T0001, Specification for Seismic Qualification for Seismic Category III/IV Equipment and Tanks.

2 Applicable Documents

2.1 General

2.1.1 Work shall be done in accordance with the referenced codes, standards, and documents listed below, which are an integral part of this specification.

2.1.2 When specific chapters, sections, parts, or paragraphs are listed following a code, industry standard, or reference document, only those chapters, sections, parts, or paragraphs of the document are applicable and shall be applied. If a date or revision is not listed, the latest issue, including addenda, at the time of award shall apply. When more than one code, standard, or referenced document covers the same topic, the requirements for all must be met with the most stringent governing.

2.2 Codes and Industry Standards

2.2.1 ASME B31.3-1996, Process Piping

2.2.2 ASME B16.5, Pipe Flanges and Flanged Fittings NPS 1/2 Through NPS 24 Addenda A

2.2.3 ASME B16.47, Large Diameter Steel Flanges NPS 26 through NPS 60 Addenda A

2.2.4 ASME B18.15, Forged Eye Bolts

2.2.5 ASME Boiler and Pressure Vessel Code, Section VIII, Div. 1, Rules for Construction of Pressure Vessel

2.2.6 ASME Boiler and Pressure Vessel Code, Section IX, Welding and Brazing Qualifications

2.2.7 ASME NQA-1-1989, Quality Assurance Program Requirements for Nuclear Facility Applications

2.2.8 ASME Y14.100, Engineering Drawing Practices

2.2.9 AISC ASD, 9th Edition, Manual of Steel Construction, Allowable Stress Design

2.2.10 AISC N690, Specification for the Design, Fabrication, and Erection of Steel Safety-Related Structures for Nuclear Facilities

2.2.11 ANSI N14.6, For Radioactive Materials-Special Lifting Devices for Shipping Containers Weighing 10,000 Pounds (4500 kg) or More

2.2.12 ASTM F593, Standard Specification for Stainless Steel Bolts, Hex Cap Screws, and Studs

2.2.13 ASTM F594, Standard Specification for Stainless Steel Nuts

2.2.14 AWS D1.6, Structural Welding Code-Stainless Steel

2.2.15 AWS D9.1, Sheet Metal Welding Code

2.2.16 IEEE Std 1023-88, IEEE Guide for the Application of Human Factors Engineering to Systems, Equipment, and Facilities of Nuclear Power Generating Stations

2.2.17 MIL-STD-1629A, Military Standard, Procedures for Performing A Failure Mode, Effects and Criticality Analysis

2.2.18 UBC-1997, Uniform Building Code

2.2.19 10 CFR 835, Occupational Radiation Protection

2.2.20 49 CFR 173, General Requirements for Shipments and Packaging. Code of Federal Regulations. U.S. Department of Transportation, Washington, D.C.

2.2.21 29 CFR 1910, Occupational Safety and Health Standards

2.2.22 NFPA 101, Code for Safety to Life from Fire in Buildings and Structures

2.2.23 NFPA 70-1999, National Electric Code

2.2.24 WAC 296-24, General Safety and Health Standards

2.3 Reference Documents

2.3.1 Interfacing References

2.3.1.1 24590-WTP-3PS-G000-T0001, General Specification for Supplier Quality Assurance Program Requirements

2.3.1.2 24590-WTP-3PS-G000-TP002, Specification for Positive Material Identification (PMI)

2.3.1.3 24590-WTP-3PS-G000-T0003, General Specification for Packaging, Shipping, Handling, and Storage Requirements

2.3.1.4 24590-WTP-3PS-NWP0-T0001, Engineering Specification for General Welding and NDE Requirements for Supplier Fabricated Piping

2.3.1.5 24590-WTP-PER-PL-02-001, Piping Material Class Description

2.3.1.6 24590-WTP-3PS-SS00-T0002, Engineering Specification for Welding of Structural Stainless Steel and Welding of Structural Carbon Steel to Structural Stainless Steel

2.3.1.7 24590-WTP-3PS-SS90-T0001, Specification for Seismic Qualification of Seismic Category I/II Equipment and Tanks

2.3.1.8 24590-WTP-3PS-FB01-T0001, Engineering Specification for Structural Design Loads for Seismic Category III & IV Equipment and Tanks

2.3.1.9 24590-WTP-3PS-EVV1-T0001, Specification for Low Voltage Adjustable Speed Drives

2.3.1.10 24590-WTP-3PS-MUMI-T0002, Specification for Low Voltage Induction Motors

2.3.1.11 24590-WTP-3PS-MPC0-TP002, Engineering Specification for General Centrifugal Pumps to Meet Requirements of ASME B73.1M-1991 and ASME B73.2M-1991 for Commercial (CM) Components

2.3.1.12 Deleted.

2.3.1.13 24590-WTP-3PS-MJJ0-T0001, Engineering Specification for Lifting Beams for Mechanical Handling Equipment Important to Safety Quality Level II

2.3.1.14 24590-WTP-3PS-MV00-TP001, Engineering Specification for Pressure Vessel Design and Fabrication

2.3.1.15 24590-WTP-3PS-MV00-TP002, Engineering Specification for Seismic Qualification Criteria for Pressure Vessels

2.3.1.16 24590-WTP-3PS-MES0-TP001, Engineering Specification for Shell and Tube Heat Exchangers

2.3.1.17 24590-WTP-3PS-MVB2-T0001, Engineering Specification for Welding of Pressure Vessels, Heat Exchangers, and Boilers

2.3.1.18 24590-WTP-3PS-JQ07-T0001, Engineering Specification for Instrumentation for Package Systems

2.3.1.19 24590-WTP-3PS-PS02-T0001, Engineering Specification for Shop Fabrication of Piping

2.3.1.20 24590-WTP-3PS-AFPS-T0001, Engineering Specification for Shop Applied Special Protective Coatings for Steel Items and Equipment

2.3.1.21 24590-WTP-3PS-EKP0-T0001, Engineering Specification for Electrical Requirements for Packaged Equipment

2.3.1.22 Deleted

2.3.1.23 24590-PTF-S0C-S15T-00005, Seismic Analysis of Pretreatment Building – In structure Response Spectra (ISRS)

2.3.1.24 24590-WTP-3PS-MPC0-TP002, Engineering Specification for General Centrifugal Pumps to Meet Requiremetns of ASME B73.1M-1991 and ASME B73.2M-1991 for Commercial (CM) Components.

2.3.2 Developmental References

2.3.2.1 24590-PTF-3YD-CNP-00001, System Description for Cesium Nitric Acid Recovery Process-System CNP

2.3.2.2 24590-WTP-3PS-MV00-TP003, Engineering Specification for Pressure Vessel Fatigue Analysis

2.4 Reference Drawings / Data Sheets

2.4.1 24590-WTP-MV-M59T-00001, Pressure Vessel Tolerances Standard Details

2.4.2 24590-WTP-MV-M59T-00007, Thermowell Connection Standard Details

2.4.3 24590-WTP-MV-M59T-00009, Lifting Lugs Standard Details

2.4.4 24590-WTP-MV-M59T-00010, Tailing Lug Standard Details

2.4.5 24590-WTP-MV-M59T-00011, Wash Rings Standard Details

2.4.6 24590-WTP-MV-M59T-00012, Grounding Lug Standard Details

2.4.7 24590-WTP-MV-M59T-00016001, Vessel Connections Standard Details Sheet 1 of 3

2.4.8 24590-WTP-MV-M59T-00016002, Vessel Connections Standard Details Sheet 2 of 3

2.4.9 24590-WTP-MV-M59T-00016003, Vessel Connections Standard Details Sheet 3 of 3

2.4.10 24590-WTP-MV-M59T-00017, Vessel Inspection Manway Standard Details

2.4.11 24590-WTP-MV-M59T-00018, Vessel Name Plate Standard Details

2.4.12 24590-WTP-MV-M59T-00026, Anchor Bolt Chair Details for Vertical Vessels

2.4.13 24590-WTP-M0-M10T-00004, HLW & PTF Vitrification Systems HSH, RWH, PFH, PIH Design Proposal Drawing 3 Ton Capacity Lifting Hook

2.4.14 24590-WTP-M6-50-P0001, P&ID Symbol and Legend Sheet 1 of 6

2.4.15 24590-WTP -M6-50-P0002, P&ID Symbol and Legend Sheet 2 of 6

2.4.16 24590-WTP -M6-50-P0003, P&ID Symbol and Legend Sheet 3 of 6

2.4.17 24590-WTP -M6-50-P0004, P&ID Symbol and Legend Sheet 4 of 6

2.4.18 24590-WTP -M6-50-P0005, P&ID Symbol and Legend Sheet 5 of 6

2.4.19 24590-WTP -M6-50-P0006, P&ID Symbol and Legend Sheet 6 of 6

2.4.20 24590-PTF-P1-P01T-P0001, Pretreatment Building General Arrangement Plan at El. 0'-0"

2.4.21 24590-PTF-P1-P01T-P0002, Pretreatment Building General Arrangement Plan at El. 28'-0"

2.4.22 24590-PTF-P1-P01T-P0007, Pretreatment Building General Arrangement Section A-A

2.4.23 24590-PTF-P1-P01T-P0008, Pretreatment Building General Arrangement Section B-B

2.4.24 24590-PTF-P1-P01T-P0009, Pretreatment Building General Arrangement Section C-C

2.4.25 24590-PTF-P1-P01T-P0010, Pretreatment Building General Arrangement Section D-D

2.4.26 24590-PTF-P1-P01T-P0011, Pretreatment Building General Arrangement Section E-E

2.4.27 24590-PTF-P1-P01T-P0012, Pretreatment Building General Arrangement Sect. F-F and Sect. G-G

2.4.28 24590-PTF-P1-P01T-P0013, Pretreatment Building General Arrangement Sect. H-H and Sect. J-J

2.4.29 24590-PTF-P1-P01T-P0014, Pretreatment Building General Arrangement Sect. K-K and Sect. L-L

2.4.30 24590-PTF-P1-P01T-P0015, Pretreatment Building General Arrangement Sect. M-M and Sect. N-N

2.4.31 24590-PTF-P1-P01T-P0016, Pretreatment Building General Arrangement Sect. P-P and Sect. Q-Q

2.4.32 24590-PTF-P1-P01T-P0017, Pretreatment Building General Arrangement Sect/ R-R

2.4.33 24590-PTF-DD-S13T-00022, Pretreatment Facility Structural Concrete Embedments Key Plan Elevation 0 ft – 0 in

2.4.34 24590-PTF-DD-S13T-00025, Pretreatment Facility Structural Concrete Embedments Plan El 0 ft – 0 in Sh 3

2.4.35 24590-PTF-DD-S13T-00027, Pretreatment Facility Structural Concrete Embedments Plan Elevation 0 ft – 0 in Sh 5

2.4.36 24590-PTF-DD-S13T-00028, Pretreatment Facility Structural Concrete Embedments Plan Elevation 0 ft – 0 in Sh 6

2.4.37 24590-PTF-DD-S13T-00036, Pretreatment Facility Structural Concrete Embedments EL 0 ft – 0 in Vessels Sh 1

2.4.38 24590-PTF-DD-S13T-00042, Pretreatment Facility Structural Concrete Embedment Details EL 0 ft – 0 in Vessels Sh 1

2.4.39 24590-PTF-DD-S13T-00043, Pretreatment Facility Structural Concrete Embedment Details EL 0 ft – 0 in Vessels Sh 2

2.4.40 24590-PTF-DD-S13T-00044, Pretreatment Facility Structural Concrete Embedment Details EL 0 ft – 0 in Vessels Sh 3

2.4.41 24590-PTF-MJD-PIH-00001, Mechanical Handling Data Sheet for Overhead Mast Power Manipulator

2.4.42 24590-PTF-M0-PIH-00008, Pretreatment System PIH Design Proposal Drawing 30 Ton Capacity Lifting Hook

3 Design Requirements

3.1 General

3.1.1 As Low As Reasonably Achievable (ALARA) principles shall be factored into the design and maintenance of the evaporator system per 10 CFR 835, *Occupational Radiation Protection.*

3.1.2 Unless otherwise specified, the evaporator system shall be designed and fabricated per applicable documents listed in section 2.0 of this specification, and the data sheets in section 2 of the MR. No changes, substitutions, or deviations shall be made without Buyer's concurrence.

3.1.3 The evaporator system design shall comply with the requirements stipulated in this specification. Seller shall conform with Buyer's requirements for hot cell wall penetrations, recirculation piping/jumper configuration, layout, and dimensions. Seller shall confirm locations for all evaporator equipment are adequate for system functionality. Seller shall submit any variances to these requirements during design review stage for concurrence.

3.1.4 The evaporator piping and instrumentation sketches provided in the Section 2 of the MR illustrate the conceptual piping and instrument control of the evaporator system. All evaporator system components shall have adequate control features to bring evaporator operations to a safe and stable 'shutdown' condition during an abnormal event. Seller's control design philosophy can differ from Buyer's

conceptual control; however, the Seller's control system design shall conform to Buyer's specification 24590-WTP-3PS-JQ07-T0001.

3.1.5 General Arrangement drawings should be used to convey approximate equipment locations for skids. Equipment locations shown in Appendix F shall be maintained unless the design dictates an alternate location.

3.1.6 The Seller shall be responsible for the evaporator system design including component specification such as design parameters, sizing and environmental protection (temperature, humidity, etc.) as required.

3.1.7 Deleted.

3.1.8 All heat exchangers including the reboiler and condensers shall comply with ASME section VIII and TEMA standard, Class B. "Code Stamp & National Board Registration" shall be provided for all Seller's provided heat exchangers.

3.1.9 Seller shall comply with nozzle loading requirements specified in the 24590-WTP-3PS-MV00-TP001, *Engineering Specification for Pressure Vessel Design and Fabrication* for vessels. Recirculation pump allowable nozzle loading shall comply with API 610.

3.1.10 Gusset plates cannot be utilized to accommodate the required nozzle loading on safety class vessels and heat exchangers.

3.1.11 The equipment shall be designed such that personnel sound level exposure outside of R5/C5 area shall not exceed 85 dBA. Seller shall clearly state how the specified sound level limit will be met.

3.1.12 All calculations, modeling, analyses, drawings, and documentation shall utilize U.S. customary units.

3.1.13 Design of the evaporator systems shall incorporate the latest and best proven technology, components, and materials for the required service conditions and performance.

3.1.14 The evaporator system model analysis, thermal analysis, design analysis, and seismic analysis shall be verified such that the final system, equipment and component design meet the requirements of this specification as well as its addenda and attachments.

3.1.15 Evaporator system equipment shall be furnished as discrete skid mounted units that are ready to integrate with the Buyer's structures, systems, and components.

3.1.16 The evaporator system shall utilize common component types and equipment manufacturers as applicable.

3.1.17 The evaporator system operates on a batch-wise process continuously. The evaporator system shall be designed in accordance with following feed conditions:

- Design CXP eluate feed flow of 6.9 to 10 gpm (non-constant feed rate)
- Design feed temperature of 77 °F
- eluate feed pH of 0 - 9
- eluate feed cycle duration (range: 18 – 25 hours, every 33 hours)

3.1.18 Design cooling water temperature of 75 °F shall be used for designing/sizing all condensers.

3.1.19 Evaporator systems and components should be designed to prevent the migration of contamination into the utility / reagent systems.

3.1.20 Human factors and ergonomics shall be designed into all evaporator equipment requiring manual operations per IEEE Std 1023, *IEEE Guide for the Application of Human Factors Engineering to Systems, Equipment, and Facilities of Nuclear Power Generating Stations*.

3.1.21 Quality level, seismic category, materials of construction, design pressure, and design temperature shall be in accordance with the data sheets and attachments in section 2 of the MR. If a change to the requirements for materials and/or the equipment types to be used during the execution of the contract is dictated because of design analyses, then the Seller is required to provide Buyer its recommendation for review and concurrence prior to incorporation into the design of the evaporator systems.

3.1.22 All equipment in the evaporator system requiring maintenance or removal shall have flushing and draining capability to facilitate decontamination. Design features shall minimize the need for decontamination by including sloping features, replacing sharp bends with gradual bends, etc. where practical, consistent with ALARA practices.

3.1.23 Provision for temperature instrumentation shall be jumper nozzles incorporating the required thermowell details.

3.1.24 Nozzle and flange alignment shall be within ± 0.5 degrees of nominal design specifications.

3.1.25 Jumper nozzle connections shall be included in the evaporator system to interface with the Buyer supplied jumpers. Location and details of the connections shall be agreed upon with the Buyer following the 30 % design review.

3.1.26 Seller shall provide the evaporator system in the skids for ease of transportation, installation, and replacement. Seller is responsible for equipment skid sizing and layout to fit Buyer's facility. For the baseline design, the evaporator system will comprise the following skids:

- Separator vessel skid inclusive of vessel
- Reboiler skid inclusive of reboiler
- Recirculation pump skid inclusive of pump
- Rectifier skid inclusive of rectifier

- Condenser skid which includes steam ejectors, primary, inter, and after-condensers
- Steam conditioning system which includes a pressure reducing valve and control and a desuperheater

3.2 Basic Function

The Cesium Nitric Acid Recovery System (CNP) supports the Cesium Ion Exchange System (CXP) and must be available at all times to maintain the CXP system in a continuous operation to maintain LAW throughput. The design CXP loading cycle is 33 hours. In order to have continuous processing of LAW the complete regeneration of a Cs ion exchange (IX) resin bed must be completed in under 33 hours. A regeneration of a resin bed requires multiple steps, of which elution and post elution rinse are sent to the CNP system for evaporation. The CNP system will maintain a constant volume of eluant for each regeneration step, thus the volume of rinse water sent to the CNP system must be disposed of to the PWD system. The PWD vessels are located at the 0 foot elevation and are approximately 45.5 ft high. The separator vessel is initially charged with a 5M to 8M HNO_3 solution in order to attain the correct vapor liquid equilibrium to recover a 0.5M HNO_3 rectifier bottoms product to be re-used as eluant. The recovered eluant vessel, which receives the rectifier bottoms product, is located on the 0 foot elevation. The vessel has a liquid operating level of approximately 15.3 ft at a maximum, however the level will cycle through the elution and rinse steps. The change in volume depends on the rinse volume used in the IX system. The volume of eluant and rinse will be provided as input to the CNP system each cycle.

The CNP system will receive and concentrate multiple eluate batches until a specified density is met which correlates to a specific solubility limit. Once the specified density is met, the system is shut down and the concentrate is transferred out of the system. A fresh charge volume of nitric acid is then added to the evaporator system and the process restarted.

The control for the evaporator system should allow for the system to be fully automated, receiving inputs from the CXP system for the eluate flowrates and volumes that will be received, and initiation of receipt and standby modes of operation. The CNP system will require automated control during possible upset conditions to ensure a safe working environment is maintained for workers and the public and that the environment is protected.

3.3 Performance

3.3.1 The evaporator system shall be capable of continuous operation while achieving a process boil off rate ranging from 6.9 to 10 gpm. All water/fluid addition to demister pads spray, and reflux via the rectifier separation trays and primary condenser shall be in addition to the evaporation rate.

3.3.2 The evaporator system shall have the ability to be placed on "total reflux" mode.

3.3.3 The evaporator system shall be capable of transferring from a cold shutdown state to a hot standby state in under 4 hours.

3.3.4 The evaporator system shall require a hot standby mode to accommodate receiving eluate feed for 18 to 25 hours every 33 hours.

3.3.5 The evaporator system shall maintain constant recovered eluant working volumes, excess water is to be purged from the system as a rectifier overhead product. Approximately 1200 gallons of rinse water will be introduced to the evaporator during the CXP eluate feed cycle and should be purged during evaporation.

3.3.6 Evaporator system operating parameters shall minimize reboiler fouling by using low differential temperature and high tube velocity to the extent practical in the design.

3.3.7 The evaporator system shall be able to cool concentrate to a temperature which will allow for transfer with a steam emptying ejector. This should be performed by pulling a stronger vacuum on the system.

3.3.8 The evaporator system shall produce a maximum concentrated waste specific gravity of 1.37 (for $NaNO_3$ at 80% of its solubility limit), which is exclusive of any solids present in the waste.

3.3.9 The evaporator system shall produce a rectifier bottoms product of 0.5 M HNO_3.

3.3.10 All evaporator system components within the R5/C5 black cell (except the demister pads) shall be nonreplaceable components with a design life of 40 years. The reboilers and recirculation pump in the R5/C5 hot cell shall be remotely replaceable.

3.4 Design Conditions

3.4.1 General

3.4.1.1 For nominal conditions refer to Appendix A and Appendix B for the evaporator stream data and simplified thru-put flow diagram, respectively. Appendix C provides data that defines the system performance operating conditions and requirements.

3.4.1.2 All equipment skids shall meet applicable Department of Transportation (DOT) requirements for road transportation per 49 CFR 173.

3.4.2 Physical Constraints/Interfaces

3.4.2.1 The evaporator separator vessel (CNP-EVAP-00001) with demister pads shall be located in the R5/C5 black cell, room P-0112 on the 0-ft floor elevation. The demister pad assembly shall be accessed through a sealed, shielded aperture in the 56 ft floor (10-ft diameter maximum). Refer to Appendix F for the location and layout.

3.4.2.2 The Reboiler and recirculation pump shall be located in the R5/C5 hot cell, room P-0123 on the 0-ft floor elevation. The reboiler assembly (including the residual process fluids left inside reboiler after flushing and draining) shall not weigh more than 25 tons

including all lifting fixtures and lifting beams. The available space for the reboiler (excluding nozzles) has dimensions of 4 ft diameter by 15 ft high. All equipment assembly must fit through a 13 ft by 13 ft air lock door while supported by buyer supplied cart and shall not exceed 21 ft length. Refer to Appendix F for locations and layout.

3.4.2.3 The evaporator primary condenser (CNP-HX-00002) and secondary condenser system (CNP-HX-00003, -00004, and CNP-EJCTR-00009A/B, -00010A/B) shall be designed to fit on the 77-ft floor elevation. Refer to Appendix F for locations and layout.

3.4.2.4 The rectifier (CNP-DISTC-00001) shall be designed to fit on the 56-ft floor elevation. Refer to Appendix F for location and layout.

3.4.3 Buyer Supplied Utilities

Values for all utility supply pressures and temperatures are nominal values.

3.4.3.1 Plant service air and instrument air will be supplied at approximately 100 psig and 65 °F.

3.4.3.2 Low pressure steam will be supplied at approximately 40 psig and 286 °F.

3.4.3.3 High pressure steam will be supplied at approximately 109 psig and 343 °F.

3.4.3.4 Cooling water will be supplied at approximately 45 psig and 75 °F with a peak summer maximum of 83 °F. The cooling water temperature of 75 °F is valid for 85 % of the time through a year.

3.4.3.5 Demineralized water will be supplied at approximately 72.5 psig and 75 °F for demister pad and separation tray spray in the event that sufficient process condensate is unavailable.

3.4.3.6 Water, 5 M nitric acid at approximately 75 psig and 77 °F, or up to 50 % wt caustic (2 M to 5 M typically) at approximately 75 psig and 77 °F can be supplied for the Seller's flushing system.

3.5 Environmental Conditions

3.5.1 Storage

Prior to installation, the evaporator system may be stored outdoors at ambient temperature extremes ranging from –30 °F dry-bulb to 117 °F dry-bulb and with a relative humidity of 0-100 %.

3.5.2 Evaporator Separator Vessel

The separator vessel (CNP-EVAP-00001) will be installed indoors in an R5/C5 black cell maintained between 59 to 113 °F dry-bulb temperature during normal operation. Radiation exposure for the separator vessel will be 1,000 Rad/hr or more.

3.5.3 Reboiler and Recirculation Pump

The reboiler (CNP-HX-00001) and recirculation pump (CNP-PMP-00001) will be installed indoors in an R5/C5 hot cell maintained between 59 to 113 °F dry-bulb temperature during normal operation. Radiation exposure will be 1,000 Rad/hr or more.

3.5.4 Primary and secondary condensers

The primary condenser (CNP-HX-00002), secondary condensers (CNP-HX-00003, -00004, CNP-EJCTR-00009A/B, -00010A/B), and process condensate pump (CNP-PMP-00002) will be installed indoors in an R3/C3 area maintained between 59 to 113 °F dry-bulb temperature during normal operation. Radiation exposure will be 2.5 mRad/hr or less during normal operation.

3.5.5 Rectifier

The rectifier (CNP-DISTC-00001) will be installed indoors in an R5/R3/C3 area. The R5/R3/C3 areas are maintained between 59 to 113 °F dry-bulb temperature during normal operation. Radiation exposure will be 1000 Rad/hr.

3.6 Recirculation Pumps

3.6.1 For recirculation pump requirements, refer to individual MDS in section 2 of the MR and equipment sketches in Appendix F of this specification.

3.6.2 The recirculation pump shall be axial-flow type mounted vertically in an elbow of the recirculation loop. The remote handling structural support requirements for the recirculation pump shall be provided by the Seller with provision to transfer loads from the pump to the structural base rather than the pump nozzles or pump shaft/impeller.

3.6.3 The recirculation pump shall be provided with a pump motor and an adjustable speed drive (ASD). Motors shall be provided with radiation resistant insulation, rated for 10^9 Total Integrated Dose (TID) rad (gamma). The ASD shall be compliant with specification *24590-WTP-3PS-EVV1-T0001, Engineering Specification for LAW Voltage Adjustable Speed Drives* and specification *24590-WTP-3PS-MUMI-T0002, Engineering Specification for Low Voltage Induction Motors.*

3.6.4 The recirculating pump shall have dual mechanical seals that will be lubricated/flushed with water. Flush piping will be based on API Plan 53. Seller shall coordinate with Buyer for details.

3.6.5 Inlet and outlet pipe ends of the recirculation pumps shall be butt welded to Buyer's supplied jumper nozzle flanges at the Seller's facility.

3.6.6 Pump nozzle loading shall comply with API 610.

3.6.7 The recirculation pump nozzle locations shall be within (±) 1/4 inch tolerance. However, the tolerance measurement device shall have a minimum of 1/1000 inch accuracy.

3.6.8 Deleted.

3.6.9 The recirculation pump shall be designed with the following features to ensure ease of process operating with a long expected mechanical lifetime:

- Low operating speed, high flow, and low head process conditions.
- Low casing fluid velocity to minimize wear on the casing.
- Top mounted motor and vertical removal design for easy crane access.
- The recirculation pump motor, impeller, shafting, and seals shall be remotely removable as one unit by using a single crane hook and crane mounted impact wrench with CCTV cameras.

3.6.10 The recirculation pump shall be designed for the following operating conditions. All fluid properties are referenced at 77 °F.

- (Seller provided flow rate gpm)
- (Seller provided viscosity cP)
- 1.0 to 1.37 SG
- 59 to 140 °F

3.7 Reboiler

3.7.1 For reboiler requirements, refer to individual MDS in section 2 of the MR and equipment sketches in Appendix F of this specification.

3.7.2 The reboiler shall be designed in accordance with Buyer's specification 24590-WTP-3PS-MES0-TP001, *Specification for Shell and Tube Heat Exchangers*.

3.7.3 The reboiler (CNP-HX-00001) shall be of all welded construction on both tube and shell sides.

3.7.4 Reboiler tubes shall be seamless and welded to the tubesheet(s) with full strength welds. The tubes shall include a corrosion allowance of 0.04 inch for the process side.

3.7.5 The reboiler shall be capable of sustaining a process evaporation rate of 6.9 to 10 gpm plus demister spray.

3.7.6 Reboiler process fluid velocity shall be greater than 4.0 ft/sec and not exceed 10 ft/sec.

3.7.7 The reboiler shall be designed for remote installation and replacement as one unit.

3.7.8 Deleted.

3.7.9 The maximum dimensions for the reboiler shall be 4 ft diameter and 15 ft height. The reboiler design shall be either multi-pass or U-tube heat exchanger with side bottom process fluid inlet and outlet.

3.7.10 The reboiler process fluid inlet and outlet nozzle diameters shall be sized not greater than 16 inches and 14 inches respectively. Inlet and outlet pipe ends of the reboiler shall be butt welded to Buyer's supplied jumper nozzle flanges at the Seller's facility.

3.7.11 Seller shall comply with nozzle loading requirements for vessels/reboilers specified in Appendix G of this specification.

3.7.12 The reboiler nozzle locations shall be within (±) 1/4 inch tolerance. However, the tolerance measurement device shall have a minimum of 1/1000 inch accuracy. Seller shall supply as-built for the nozzle locations as soon as possible to facilitate the Fabrication of the Buyer's Jumpers.

3.7.13 Low pressure steam of 40 psig will be provided by the Buyer. The Seller is responsible for providing a steam conditioning skid. The skid will include a pressure reducing valve and control and a desuperheater to produce Seller's specified saturated pressure steam for reboiler operation.

3.7.14 Deleted.

3.7.15 The reboiler shall be designed such that the static pressure of the process fluid above the reboiler is sufficient to suppress the boiling in the reboiler tubes. Boiling shall occur only near or at the liquid surface in the evaporator separator vessel.

3.7.16 The temperature rise of the process fluid as it passes through the reboiler shall be approximately 2 – 4 °F design basis to minimize the potential for tube fouling.

3.7.17 Reboiler will be installed without insulation. Reboiler duty and steam demand calculations shall include heat loss from all reboiler surfaces without insulation.

3.8 Evaporator Separator Vessel

3.8.1 For separator vessel requirements, refer to individual MDS in section 2 of the MR and equipment sketches in Appendices D and F of this specification.

3.8.2 The separator vessel shall be designed in accordance with Buyer's specification 24590-WTP-3PS-MV00-TP001, *Specification for Pressure Vessel Design and Fabrication.*

3.8.3 The separator vessel shall be designed to maximize liquid – vapor separation and to achieve a 10 gpm evaporation rate plus any excess fluid for demister spray.

3.8.4 The separator vessel shall incorporate nozzle connections for temperature (including thermowells), pressure, level, and density instrumentation as required.

The Seller shall propose reliable measurement instrumentation for Buyer to review.

3.8.5 Seller shall comply with nozzle loading requirements for vessels/reboilers specified in Appendix G and Appendix A of specification 24590-WTP-3PS-MV00-TP001, *Specification for Pressure Vessel Design and Fabrication.*.

3.8.6 The top section of the separator vessel shall incorporate lateral guides to the 56 ft floor and black cell walls to minimize horizontal forces and base overturning moments during a seismic event.

3.8.7 The centerline elevation of the separator vessel offgas nozzles shall be no higher than 47 ft-0 inch plant elevation.

3.8.8 The separator vessel head shall be removable for access to the demister pads section.

3.8.9 The separator vessel shall incorporate a 2 inch inlet nozzle to supply sufficient dilution air to negate hydrogen buildup.

3.8.10 Spray nozzles shall be provided to allow nitric acid cleaning of the demister mesh. The placement of spray nozzles shall accommodate demister section removal and not hinder maintenance operations.

3.8.11 A spray pipe with nozzles located below the lower demister pad shall be provided to spray demin water or recycled condensate into the steam flow to assist in mesh performance.

3.8.12 To improve demister efficiency and facilitate decontamination, the demister pad shall be sprayed from above and below with recycled condensate or 5 M nitric acid from a spray control system located at the 56 ft elevation.

3.8.13 Differential pressure across a series of separation trays and the demisters pad section shall not significantly elevate boiling point.

3.8.14 All nozzle connection points shall be provided clear and below any surrounding floor structural steel at 56 ft plant elevation.

3.9 Rectifier

3.9.1 For rectifier requirements, refer to individual MDS in section 2 of the MR and equipment sketches in Appendix F of this specification.

3.9.2 The rectifier shall be designed in accordance with Buyer's specification 24590-WTP-3PS-MES0-TP001, *Specification for Shell and Tube Heat Exchangers*.

3.9.3 The rectifier shall incorporate nozzle connections which allow for rinsing and decontamination with process condensate, nitric acid, or sodium hydroxide.

3.9.4 The rectifier shall be equipped with piped vents.

3.10 Primary Condenser

3.10.1 For primary condenser requirements, refer to individual MDS in section 2 of the MR and equipment sketches in Appendix F of this specification.

3.10.2 The primary condenser shall be designed in accordance with Buyer's specification 24590-WTP-3PS-MES0-TP001, *Specification for Shell and Tube Heat Exchangers*.

3.10.3 The primary condenser (CNP-HX-00002) shall be of all welded construction on the process fluid side. Tubes shall be welded to the tubesheets(s) with full strength welds.

3.10.4 Seller shall comply with nozzle loading requirements for vessels/reboilers specified in Appendix G of this specification.

3.10.5 The condenser shall be designed with hinged bonnets to allow isolation of leaking tubes utilizing contact maintenance techniques.

3.10.6 The condenser shall be designed for retubing as part of the maintenance strategy.

3.10.7 The condenser shall be designed to maximize vapor condensation from the offgas streams at a nominal rate of at least 10 gpm plus any excess fluid for demisters.

3.10.8 Average cooling water temperature rise of 18 °F shall be used for condenser design.

3.10.9 Cooling water (tube side) pressure must exceed the process vapor (shell side) pressure.

3.10.10 The primary condenser shall be compatible with process condensate that has a pH of 0 to 9, and a temperature of 240 °F (In the event of Rectifier failure). It shall also be compatible with 5 M nitric acid used for washing and decontamination.

3.10.11 The primary condenser will be installed without insulation. The primary condenser duty and cooling water demand calculations shall include heat gain from all primary condenser surfaces without insulation.

3.10.12 A pump shall be incorporated into the primary condenser and secondary condenser system to remove discharged process condensate.

3.10.13 The process condensate pump shall be designed in accordance with Buyer's specification 24590-WTP-3PS-MPC0-T0002, *Specification for General Centrifugal Pumps to Meet Requirements of ASME B73.1M-1991 and ASME B73.2M1991 for Commercial (CM) Components.*

3.11 Secondary Condenser System

3.11.1 The secondary condenser system shall consist of an inter-condenser, after-condenser, and four steam ejectors. For secondary condenser system

requirements, refer to individual MDS in section 2 of the MR and equipment sketches in Appendix F of this specification.

3.11.2 The inter-condenser and after-condenser shall be designed in accordance with Buyer's specification 24590-WTP-3PS-MES0-TP001, *Specification for Shell and Tube Heat Exchangers*.

3.11.3 Seller shall comply with nozzle loading requirements for vessels/reboilers specified in Appendix G of this specification.

3.11.4 The inter-condenser and after-condenser shall be of all welded construction on the process fluid side. Tubes shall be welded to the tubesheet(s) with full strength welds.

3.11.5 Deleted.

3.11.6 The evaporator separator vessel pressure shall be maintained by a two-stage vacuum ejector system. The first stage shall maintain a vacuum on the primary condenser and consists of a steam ejector, air in-bleed control valve, and an inter-condenser. The vapor discharged from the inter-condenser enters the second stage of the vacuum system. The second stage shall consist of a second steam ejector and an after-condenser.

3.11.7 The secondary condenser system shall provide capability for operating at a vacuum as low as achievable.

3.11.8 The two-stage vacuum system shall be designed to control the separator vessel pressure at 1.45 psia and pull a strong enough vacuum to cool evaporator contents adequately to transfer contents with a steam ejector.

3.11.9 The desired vacuum within the separator vessel shall be controlled by the air in-bleed into the suction of the 1st stage vacuum ejector.

3.11.10 Process condensate from each condenser shall be hydraulically connected to the process condensate vessel.

3.11.11 All components of the condenser skid will be installed without insulation. The duty, cooling water demand, and steam demand calculations shall include heat loss from all surfaces without insulation.

3.11.12 Cooling water pressure must exceed the process vapor pressure.

3.12 Mechanical Handling Requirements

3.12.1 Deleted.

3.12.2 Seller designed equipment shall incorporate jumper connector nozzles to facilitate process, utility, instrument, and power connections to the Buyer supplied jumpers and systems.

3.12.3 The reboiler and recirculation pump shall incorporate jumper nozzles for process pipework (e.g., pump suction and discharge connections, utilities, instrumentation, and power, as required).

3.12.4 Seller shall identify all interface points for systems requiring connection to the Buyer's process piping, jumpers, and utility systems.

3.12.5 The nozzle tolerance requirements for reboiler and recirculation pumps in the R5/C5 hot cell shall be ±1/4 inch for location and ±1/2° for angular tilt. The nozzle tolerance measurement device shall have a minimum of ±1/1000 inch accuracy. The Buyer's jumpers shall be built to as-built dimensions (x, y, z, and angular tilt) and replaced with equipment as necessary.

3.12.6 Deleted.

3.12.7 Any ancillary equipment required for removal and replacement of the demister pad assembly will be designed and provided by the Buyer based on requirements provided by the Seller.

3.13 Loadings

3.13.1 The evaporator equipment assemblies shall be self-supporting, capable of carrying the static loads of components, and capable of handling stresses imposed during shipment, installation, operation and an earthquake.

3.13.2 Loads to be considered for the structural design of evaporator vessel, equipment, and components shall be in accordance with applicable codes, standards, and reference documents listed in section 2 of this specification.

3.13.3 All support structures with SC-I and SC-II designation shall be seismically analyzed with provided ISRS curves (24590-PTF-S0C-S15T-00005) and qualified in accordance with AISC N690.

3.13.4 All support structures with SC-III and SC-IV designation shall be seismically analyzed and qualified in accordance with the AISC ASD and UBC zone 2B.

3.13.5 Seller shall complete a seismic analysis of the evaporator package designs, including skids, and skid anchorage, equipment and pressure vessel anchorage, piping anchorage. Loadings shall be calculated in accordance with the appropriate requirements of Buyer's specifications 24590-WTP-3PS-SS90-T0001, Engineering Specification for Seismic Qualification of Seismic Category I/II Equipment and Tanks, and 24590-WTP-3PS-FB01-T0001, Structural Design Loads for Seismic Category III & IV Equipment and Tanks. Analysis shall show that the evaporator system and components are capable of withstanding seismic loadings.

3.13.6 The separator vessel, heat exchangers, and rectifier shall be seismically analyzed and qualified by the Seller per Buyer's specification 24590-WTP-3PS-MV00-TP002, *Engineering Specification for Seismic Qualification Criteria for Pressure Vessels,* Buyer's specification 24590-WTP-3PS-MV00-TP001, *Specification for Pressure Vessel Design and Fabrication.*

3.13.7 The Seller shall perform thermal and static stress analyses for all evaporator structures, systems, and components.

3.13.8 Except for the reboiler and recirculation pump, all equipment skids shall be designed for a maximum floor loading of 160 lbs/ft^2. Refer to drawings 24590-PTF-DD-S13T-00022 and 24590-PTF-DD-S13T-00024 for structural concrete embed details.

3.13.9 For the reboiler and recirculation pump skids, the following nonseismic loadings requirements shall apply:

3.13.9.1 The PEP (~40,000 lbs) and its total load shall not exceed 100,000 lbs.

3.13.9.2 The load density on the PEP shall not exceed 1,500 lb/ft^2.

3.13.9.3 Loads in excess of 10,000 lbs shall have a minimum of one basemat embed support under the loads footprint.

3.13.9.4 Loads in excess of 20,000 lbs shall be placed such that their load is transferred directly onto a minimum of four load support points.

3.14 Electrical Requirements

3.14.1 The electric motor drive shall conform to the requirements set forth in Buyer's specification 24590-WTP-3PS-EVV1-T0001, *Engineering Specification for Low Voltage Adjustable Speed Drives*.

3.14.2 The recirculation pump motor shall conform to the requirements set forth in Buyer's specification 24590-WTP-3PS-MUMI-T0002, *Engineering Specification for Low Voltage Induction Motors*.

3.14.3 Seller shall comply with the requirements set forth in Buyer's specification 24590-WTP-3PS-EKP0-T0001, *Engineering Specification for Electrical Requirements for Packaged Equipment.*

3.15 Instrumentation and Control Requirements

3.15.1 General

3.15.1.1 All controls, control systems, control panels, alarm systems, analyzers, instrumentation, and their installation into the evaporator system shall conform to the requirements set forth in Buyer's specification 24590-WTP-3PS-JQ07-T0001, *Engineering Specification for Instrumentation for Package Systems*.

3.15.1.2 The Seller shall provide completed Buyer's instrument data sheets. The Buyer will use this information for procurement and installation of required instrumentation.

3.15.1.3 The Seller shall provide functional test set points and recommended operating set points with the packaged systems.

3.15.1.4 The Seller shall provide a control philosophy, which shall consist of the control loop definitions, system interlocks, alarms, and control philosophy.

3.15.1.5 The Buyer will use the Seller's control philosophies and logic narratives to provide the logic programming which will integrate the Seller's control requirements into the Buyer's overall control system.

3.15.1.6 Deleted.

3.15.1.7 The following table describes the work processes and the division of the responsibilities:

	Buyer's Responsibility	Seller's Responsibility
Blank Instrument Data Sheet	•	
Complete Instrument Data Sheet	*	•
Instrument Installation Details	•	
Instrumentation Procurement	•	
Instrumentation Installation	•	
Functional Test Set Points		•
Operating Set Points		•
Control Philosophies/ Logic Narratives		•
Software Requirements Specification	•	
Logic Programming	•	
DCS Hardware	•	

*Buyer will provide, Seller will complete

3.15.2 Other

The Seller shall provide accuracy requirements of the measured range of instrumentation as specified in Buyer's specification 24590-WTP-3PS-JQ07-T0001, *Engineering Specification for Instrumentation for Package Systems.*

3.16 Lifting Requirements

3.16.1 Seller shall identify the weight and center of gravity of each equipment skid.

3.16.2 Seller shall provide yokes for the separator vessel, reboiler, and recirculation pump for installation and remote maintenance. Each yoke will be made of structural steel except for components that directly contact Evaporator Equipment during lift; contact components shall be made of 304SS. The yokes shall be designed for balanced lifting and handling by a single hook crane. The yokes shall be designed in accordance with ANSI N14.6

3.16.3 All evaporator equipment and skids shall have lift points and attachment mechanism. Lifting bail design shall comply with proposal hook design.

3.16.4 All lifting attachments shall have either a safety factor of three (3), based on the material yield strength, or five (5), based on the material ultimate strength, whichever is more conservative. The lifting points shall have a label clearly identifying its safe working load. If forged bolts are used, they shall be used in accordance with ASME B18.15.

3.16.5 The reboiler shall be designed for horizontal transportation in the hot cell. The reboiler shall have tailing lug and tilt-up features for vertical installation with a 2-ton hoist for tailing operation.

3.16.6 The maximum hook height is 27 ft-6 in. The bottom of the reboiler, while in the vertical orientation, shall be above 5 ft-0 in.

3.16.7 The lifting lugs shall be designed to permit lifting the equipment skid without distortion or damage to the components of the equipment skid.

3.16.8 All lifting points shall be proof tested. Test and examination certificates shall be provided to the Buyer review.

3.17 Accessibility and Maintenance

3.17.1 General Maintenance Requirements

Accessibility and maintenance requirements shall be per this specification and its addenda and attachments.

3.17.2 R5/C5 Black Cell Equipment Maintenance Requirements

3.17.2.1 No equipment requiring maintenance, with the exception of demister pads, shall be located inside the R5/C5 black cell. The nonreplaceable 40-year life components shall include the separator vessel and all its internal parts (except demister pads) and their supporting structures/anchorage.

3.17.2.2 Demister pad assembly shall be remotely removable and replaceable through an 10-foot diameter opening from the 56-foot elevation floor, which is directly above the black cell. The demister pad, support, and frame shall be designed and fabricated such that they can be removed. The demister pad assembly design shall be installed as an integral unit. If the spray down mechanism's water connections are incorporated into the pad assembly, the connections shall utilize a quick disconnect type connection for the water source. Due to potential radiation and contamination concerns, viewing and removal of the of the demister pad will be accomplished with the top demister pad submerged approximately 6-inch below the water during the maintenance duration. Seller shall demonstrate and record on

VHS format video tape demister pad removal and replacement in their shop test.

3.17.3 R5/C5 Hot Cell Equipment Maintenance Requirements

3.17.3.1 The reboiler and recirculation pump in the R5/C5 hot cell shall be designed to be remotely removable and replaceable.

3.17.3.2 The reboiler and recirculation pump in R5/C5 hot cell shall be designed with mutually agreed parameters to incorporate remote-handling features to facilitate handling the P1H hot cell crane, see Ref. 2.4.41 (Data Sheet).

3.17.3.3 The reboiler shall not weigh more than 25 tons, including all required lifting fixtures.

3.17.3.4 All fittings, pipe connections, electrical power, and control connections for equipment in R5/C5 hot cell shall be engineered on jumpers suitable for remote operation using a crane hook and crane mounted impact wrench, and/or power manipulator, see Ref. 2.4.41, with CCTV cameras.

3.17.3.5 The reboiler and recirculation pump shall be made suitable for remote operation utilizing features such as trunnions, guide pins, location dowels, captive bolts, and lead-ins on bolts, and be able to be removed using a crane hook and crane mounted impact wrench with CCTV cameras. Refer to Appendix E for remote impact wrench and drawings nos. 24590-WTP-M0-M10T-00004 and 24590-PTF-M0-PIH-00008 for crane details.

3.17.3.6 The use of shims to position the reboiler or recirculation pump in the R5/C5 hot cell is not allowed. All surfaces shall be machined to locate equipment and support remote handling and replaceability.

3.17.3.7 Due to the requirement of a 12-foot reserved path for equipment removal in the hot cell, Seller shall comply with the location requirements for the reboiler and recirculation pump as shown in sketches in Appendix F.

3.17.3.8 All services to or from the recirculation pump shall be provided using jumper connections.

3.17.3.9 The maximum height of any 2-inch hex nut (jumper connector), oriented vertically, is 24 ft-6 inches in plant elevation.

3.17.3.10 The maximum height of any 2-inch hex nut (jumper connector), oriented horizontally, is 25 ft-6 inches in plant elevation.

3.17.3.11 The maximum height of the 2 ton slewing hoist is 28 ft-6 inches.

3.17.3.12 The maximum height and hook approach of the 30 ton hook is distinctly different than the 2 ton hoist. Refer to the crane data sheet, 24590-PTF-MJD-PIH-00001 for details.

3.17.3.13 Hot Cell Equipment capable of disassembly in the Hot Cell via remote crane operations shall employ nut cups with tabs or alternate design with Buyer approval. See section 2 of the material requisition for details on remote fasteners.

4 Materials

4.1 Positive Material Identification

Refer to Buyer's specification 24590-WTP-3PS-G000-TP002, *Specification for Positive Material Identification (PMI)* for PMI requirements. Seller shall submit documentation of all PMI test results which show chemical properties and material classification.

4.2 Construction

4.2.1 Seller shall specify surface finish for all materials and submit to Buyer for review.

4.2.2 Seller shall maintain a record of ASTM numbers, material test reports, and manufacturer material certifications for all materials used for construction of evaporator equipment/skids. Seller shall provide copies to the Buyer.

4.2.3 All stainless steel bolts and studs shall conform to ASTM F593.

4.2.4 All stainless steel nuts shall conform to ASTM F594.

4.2.5 Seller shall provide Material Safety Data Sheets (MSDSs) for all materials installed or used.

4.2.6 Process fluids may contain caustic solutions (50 wt % caustic), and 5 M nitric acid solutions may also be used for decontamination of the pipework, recirculation pump, valves, and instruments/instrument tubing.

4.2.7 All flanges and pipe fittings shall conform to ASME B31.3 1996 and be weld-neck and long radius type, respectively, unless otherwise specified. Flanges shall also be in accordance with ASME B16.5, and B16.47 Series A, as applicable.

4.2.8 No threaded flanges or fittings shall be used.

4.2.9 Certified material test reports shall be supplied for all stainless steel pipe, plate, sheet, and sections.

4.2.10 Selection of materials for threaded components shall minimize galling. The Seller shall also consider different material selection, sleeving, etc., where practical.

4.2.11 All materials used in the construction of the evaporator equipment shall be new and unused. Where specific criteria are not provided, material section shall be determined by the Seller and have properties and composition suitable for the specific service conditions and consistent with this specification and its addenda and attachments.

4.3 Vessels

Vessel materials shall conform to individual MDS in section 2 of the MR.

4.4 Pipework

Pipework material shall meet the piping material requirements in Buyer's specification 24590-WTP-3PS-P000-T0001, *Specification for Piping Material Classes*.

4.5 Prohibited Materials

4.5.1 Mercury and other low melting point metals, their alloys, or materials containing such metals as their basic constituents shall not be used in the construction of any components of the evaporator systems.

4.5.2 Molybdenum and halides shall not be used in direct contact with stainless steel.

4.5.3 Asbestos shall not be included in any component of the evaporator system.

4.5.4 Halide containing materials shall not be used in any component of the evaporator system.

4.5.5 "Teflon" or compounds thereof must be qualified for use with the radiation levels specified in this specification.

4.6 Storage of Special Materials (e.g., stainless steel) prior to work

4.6.1 The Seller shall meet the storage requirements in Buyer's specification 24590-WTP-3PS-G000-T0003, *General Specification for Packaging, Handling, and Storage Requirements*.

4.6.2 Stainless steel is susceptible to corrosion caused by the contact and interaction with incompatible materials. All stainless steel material shall be stored in separate areas away from other materials.

5 Fabrication

The Seller shall obtain written Final Design Review from the Buyer prior to the start of fabrication activities.

5.1 General

5.1.1 Fabrication of vessels shall be performed in accordance with Buyer's specification 24590-WTP-3PS-MV00-TP001, *Specification for Pressure Vessel Design and Fabrication.*

5.1.2 Fabrication of pipework shall be performed in accordance with Buyer's specification 24590WTP-3PS-PS02-T0001, *Specification for Shop Fabrication of Piping.*

5.1.3 Deleted.

5.1.4 All fabrication shall be performed by personnel qualified in accordance with this specification and applicable documents in section 2 of this specification.

5.2 Welding

5.2.1 Seller shall develop detailed welding, weld inspection, NDE, and weld repair procedures for fabrication of the evaporator vessel, equipment, and structural supports. Seller shall submit them to the Buyer for review prior to fabrication. Procedures shall include acceptance criteria. The procedures shall conform to the following, as applicable:

- Buyer's Specification 24590-WTP-3PS-SS00-T0002
- Buyer's Specification 24590-WTP-3PS-NWP0-T0001
- Buyer's Specification 24590-WTP-3PS-MVB2-T0001
- ASME Boiler and Press Vessel Code, section VIII, Div. 1
- ASME B31.3-1996
- AWS D1.6
- AWS D9.1

5.2.2 Welding, weld inspection, NDE, and weld repair shall be carried out in accordance with the applicable procedures developed per section 5.2.1 above.

5.2.3 Each procedure shall be prepared and qualified in accordance with the requirements of the listed specification and standards in 5.2.1 above or ASME section IX, whichever is more stringent.

5.2.4 Welder qualifications shall be performed in accordance with ASME section IX or AWS as required.

5.2.5 Personnel performing weld inspection shall be qualified in accordance with ASME Boiler and Pressure Vessel Code, section VIII, Div. 1 and Buyer's specification 24590-WTP-3PS-SS00-T0002, *Specification for Welding of Structural Stainless Steel and Welding of Structural Carbon Steel to Structural Stainless Steel.*

5.2.6 Repairs required as a result of weld rejection by either the Buyer's or Seller's final inspection shall be fully documented in accordance with Seller's Quality Assurance Program (QAP). Weld repairs shall be performed in accordance with

ASME Boiler and Pressure Vessel Code, section VIII. Weld repair records shall be included with Seller's quality verification document package to be submitted to Buyer.

6 Inspections and Examinations

6.1 Nondestructive Examinations

6.1.1 Unless otherwise specified, all vessel welds shall be inspected in accordance with the requirements outlined in the Buyer's specification 24590-WTP-3PS-MV00-TP001, *Specification for Pressure Vessel Design and Fabrication.*

6.1.2 Unless otherwise specified all pipework welds shall be inspected in accordance with the requirements outlined in Buyer's specification 24590-WTP-3PS-PS02-T0001, *Specification for Shop Fabrication of Piping.*

6.2 Dimensional Inspections

6.2.1 The Seller shall develop and implement a procedure to dimensionally inspect each fabricated item. The procedure shall include the type of measuring device(s) to be used and identify how they will be checked for calibration status.

6.2.2 The Seller shall record all dimensional data, indicating the actual dimensions, the temperature, the date and time of inspections, and signatures of the certified inspection personnel.

6.2.3 The Seller shall notify the Buyer in advance of dimensional inspections. The Buyer may send representatives to witness the inspections or perform an independent inspection.

6.2.4 Deleted.

6.3 Visual Weld Inspections

6.3.1 The Seller shall develop and implement a procedure to perform visual weld inspections (visual tests, VT) to inspect each weld. The inspection procedure shall be developed in accordance with Buyer's specification 24590-WTP-3PS-MVB2-T0001, *Specification for Welding Pressure Vessels, Heat Exchangers and Boilers* and ASME B31.3 1996, and shall include inspection materials and acceptance criteria.

6.3.2 Acceptance criteria for visual weld inspections for the separator vessel and heat exchangers shall be in accordance with Buyer's specification 24590-WTP-3PS-MVB2-T0001, *Specification for Welding Pressure Vessels, Heat Exchangers and Boilers* and for pipework shall be in accordance with ASME B31.3 1996.

6.3.3 The Seller shall prepare a visual weld inspection report for each fabricated item, which records inspection results, the date and time of inspections, and signatures

of certified inspection personnel performing the inspections. Each inspected weld shall be assigned a unique number.

6.3.4 The visual weld inspection report and weld map shall be included in the required documentation packages.

6.3.5 The Seller shall summarize the VT results in the weld map report for each item.

6.3.6 The Seller shall notify the Buyer in advance of inspections. The Buyer may send representatives to witness inspections or perform independent inspections.

6.4 Liquid Penetrant Test

6.4.1 The Seller shall develop and implement a procedure to perform a liquid penetrant test (PT) to inspect each weld. The procedure shall be developed in accordance with Buyer's specification 24590-WTP-3PS-MVB2-T0001, *Specification for Welding Pressure Vessels, Heat Exchangers and Boilers* and ASME B31.3 1996, and shall include inspection materials, dwell time for dye and developer, and acceptance criteria.

6.4.2 Acceptance criteria for PT inspection shall be in accordance with Buyer's specification 24590-WTP-3PS-MVB2-T0001, *Specification for Welding Pressure Vessels, Heat Exchangers and Boilers* and for pipework shall be in accordance with ASME B31.3 1996.

6.4.3 The Seller shall prepare a liquid penetrant test report for each weld connection on each fabricated item, which will record PT inspection results, the weld number, the date and time of inspections, and signatures of the certified inspection personnel performing the tests.

6.4.4 The Seller shall include the liquid penetrant test reports in the required documentation packages.

6.4.5 The Seller shall summarize the PT results in the weld map report for each item.

6.4.6 The Seller shall notify the Buyer in advance of testing. The Buyer may send representatives to witness testing.

6.5 Radiography

6.5.1 Radiographic examinations shall be carried out on all primary containment pipework butt-welds using 100 % radiography for QL components.

6.5.2 The Seller shall develop and implement a procedure to perform radiographic weld examinations of piping butt-welds. The procedure shall be developed in accordance with ASME B31.3 1996, and shall include examination materials and acceptance criteria.

6.5.3 The Seller shall prepare a weld examination report for fabricated piping systems, which records examination results, the date and time of the examinations, and signatures of certified personnel performing the examinations.

6.5.4 The weld examination report and weld map shall be included in the required documentation packages.

6.5.5 The Seller shall summarize the radiography results in the weld map report for each item. The Seller shall provide radiographic film with technique and reader sheets.

6.5.6 The Seller shall notify the Buyer in advance of examinations. The Buyer may send representatives to witness examinations.

6.6 Final Inspection

6.6.1 The Seller shall develop and implement a procedure for final inspection of each fabricated item. The inspections shall be performed after completion of all fabrication, cleaning, and testing, and just prior to final packaging. The inspections shall include inspection of all surfaces for contamination. Visible evidence of contamination is not acceptable.

6.6.2 The Seller shall prepare a final inspection report for each item, which documents the results of the final inspection. The Seller shall include the final inspection report in the documentation package for each piece.

6.7 Inspection and Test Status

The Seller shall maintain a positive system for identifying inspection and testing status of items and systems.

6.8 Control of Nonconforming Items

The Seller shall use the Supplier Deviation Disposition Request per MR section 2 to notify the Buyer of fabricated items and fabrication activities not conforming to the requirements. Any nonconforming work shall be redone by the Seller at Seller's cost.

7 Testing

7.1 Shop Tests

7.1.1 The Buyer reserves the right to witness all shop tests and shall be given a minimum of 10 working days written notice prior to each test date.

7.1.2 All pipework shall be hydrostatically tested in accordance with ASME B31.3 1996. Test water used for hydrostatic testing shall be tested for chlorides. The chloride content of the test water shall not exceed 50 ppm and the water temperature shall not exceed 120 °F. Buyer shall review all test pressures prior to commencement of any testing. The testing results shall be documented and provided to Buyer.

7.1.3 Testing of vessels shall be performed in accordance with Buyer's specification 24590-WTP-3PS-MV00-TP001, *Specification for Pressure Vessel Design and Fabrication.*

7.1.4 Functional tests of evaporator equipment/skids shall be performed by the Seller.

7.1.5 Seller shall demonstrate and record on VHS format video tape demister pad removal. Test shall be done with equipment representative of what will actually be installed and utilized in the Buyer's facility.

7.1.6 Buyer will furnish lifting yokes details for the separator vessel, reboiler, and recirculation pump. All Seller supplied lifting yokes shall be load tested to 1.5 times the design load.

7.1.7 Each evaporator equipment skid shall be lift tested by the Seller to demonstrate proper vertical orientation using the Seller-supplied tooling and fixtures. This testing includes verification of all tilt up features. During the lift test the deflection at the midpoint of each skid shall be monitored and recorded to ensure that proper alignment is maintained. The centerline of the evaporator skid shall be within ±1 inch of true vertical when measured from the lift point. Permanent deflection or a change in the evaporator skid alignment is unacceptable.

7.1.8 Seller shall furnish blind flanges or other acceptable closures for the nozzles, as required for hydrotesting. Closures shall be removed after testing, unless they are required for shipment.

7.1.9 The Demister Pad Removal System/Manipulator shall be functionally tested prior to shipment. Two lengths of rail shall be used to verify performance of the manipulator on the rails. The support posts for these rails will be mounted to temporary base plates at Seller's shop during the test to provide stability.

7.1.10 All test results shall be documented, certified, and submitted to the Buyer for review.

7.2 Integrated Acceptance Tests

An Integrated Acceptance Test will be performed by the Buyer at the Buyer's site on the fully assembled evaporator system to verify that the functional requirements and process control requirements of this specification have been met. Tests shall be performed per Buyer's testing program. Seller shall provide the Buyer procedures suggesting how the evaporator system shall be functionally tested. The Seller shall be responsible for equipment performance during the tests. The procedures shall include the following:

7.2.1 Performance Testing

7.2.1.1 Limiting the entrainment of radionuclides from the evaporator rectifier to the primary condenser is an important safety function. During cold commissioning, the performance of the evaporator system will be measured using surrogate chemicals to determine the degree of entrainment from the evaporator to the primary condenser. Stable (nonradioactive) cesium will be the surrogate of choice for simulating radionuclide carryover to the condensing system.

7.2.1.2 Steady state operation is defined as:

- Liquid density of the concentrate ranges from 72.4 to 85.5 lbm/ft^3 at operating temperature.
- Sodium cation and nitrate, chloride anions are the predominate soluble chemical analytes in the concentrate.
- The soluble concentration of stable (nonradioactive) cesium in the rectifier bottoms (recovered nitric acid) is no greater than 5E-5 milligrams per liter.

7.2.1.3 The following criteria must be met prior to final acceptance of the evaporator system design:

- At steady state operation, the stable (nonradioactive) cesium carry-over from the evaporator to the recovered eluant must be 5E-5 milligrams per liter or less over each eluant recovery cycle over the batch concentration cycle for the evaporator.
- At steady state operation, the instantaneous mass rate of stable (nonradioactive) cesium carry-over from the evaporator to the recovered eluant shall not exceed 5E-5 milligrams per liter in any one (1) hour period.

7.2.1.4 The performance testing and acceptance criteria shall apply over a boil-off range from 6.9 gpm to 10 gpm of total condensate, as measured in the condensate receiver vessel and recovered nitric acid collection vessel.

7.2.1.5 Performance testing shall be corrected for uncertainty in instrument and analytical measurements.

7.2.2 A full simulation of abnormal shutdown conditions.

8 Preparation for Shipment

8.1 General Requirements

8.1.1 The evaporator equipment/skids shall be packaged/prepared for shipment, handled, and stored in accordance with the following requirements in

- Material Requisition.
- Buyer's Specification 24590-WTP-3PS-G000-T0003, *General Specification for Packaging, Handling, and Storage Requirements.*
- Buyer's Specification 24590-WTP-3PS-PS02-T0001, *Specification for Shop Fabrication of Piping.*
- Buyer's Specification 24590-WTP-3PS-MV00-TP001, *Pressure Vessel Design and Fabrication.*

8.1.2 Seller shall ensure that appropriate documentation is prepared and, if required, signed by the appropriate person(s). The shipping documentation shall accurately reflect specific traceability to the items being shipped.

8.1.3 Seller shall ensure that appropriate documentation is prepared for the evaporator equipment/skids. At a minimum, documentation shall include the following information, as applicable:

- Manufacturer name, model number, and serial number.
- Skid number.
- Plant item number.

8.1.4 Solvents and cleaning solutions used on stainless steel shall have a halogen content of less than 200 ppm.

8.1.5 The reboiler and recirculation pump will be shipped installed in their structural support frames for installation. The reboiler shall be transported from the Seller site to the Buyer site in the horizontal orientation due to air lock size limits.

8.1.6 The separator vessel will be shipped on its installation skid including any temporary shipping skids required.

8.1.7 Lifting weight shall be clearly marked on both the equipment skid and its shipping documentation.

8.2 Painting

All exposed ferrous surfaces, other than corrosion resistant stainless steel and finished machined mating surfaces, may be prepared coated using the manufacturers' standard. Buyer's specification 24590-WTP-3PS-AFPS-T0001, *Engineering Specification for Shop Applied Special Protective Coating for Steel Items and Equipment* may also be used at the Seller's discretion.

8.3 Tagging

8.3.1 Tagging of evaporator components, equipment, and skids shall be per this specification and the applicable documents listed in section 2 of this specification. Plant item numbers for evaporator component/equipment shall be per the data sheets that are in section 2 of the MR.

8.3.2 Instruments shall have nameplates installed per section 8 of Buyer's specification 24590-WTP-3PS-JQ07-T0001, *Engineering Specification for Instrumentation for Package Systems*.

8.3.3 The recirculation pump motor shall have a nameplate per section 3 of Buyer's specification 24590-WTP-3PS-MUMI-T0002, *Engineering Specification for Low Voltage Induction Motors.*

8.3.4 Packages shall be suitably marked on the outside to facilitate identification of the purchase order, the procurement specification, the package contents, and any special handling instructions.

8.3.5 Slinging points and orientation for storage shall be clearly marked.

8.3.6 Deleted.

8.3.7 A stainless steel nameplate shall be rigidly attached to the evaporator equipment skid packages in a prominent position for ease of visibility, and shall include the following:

- Manufacturer's name.
- Shop location.
- Date of manufacture.
- Serial number.
- Equipment rating (pressure, temperature and flow).
- Skid number.
- Plant item number.
- Weight of assembly.
- Purchase order number.

9 Quality Assurance

9.1 General Commercial Designation (CM) Requirements

9.1.1 The Seller's Quality Assurance Program (QAP) Requirements are included in 24590-WTP-3PS-G000-T0001, *Supplier Quality Assurance Program.*

9.1.2 Seller's QAP Manual shall be submitted to buyer for review in accordance with 24590-WTP-3PS-G000-T0001, *Supplier Quality Assurance Program.*

9.1.3 Seller's QAP, as a minimum, shall contain the requirements of DOE Order 414.1A as detailed in the Supplier Quality Assurance Program Requirements Data Sheets listed in section 2 of the MR. The very same requirements shall be passed down to any lower tier subcontractor.

9.2 Quality Level (QL) Requirements

9.2.1 Seller shall have in place a QA program meeting the requirements marked as applicable in the Supplier Quality Assurance Program Requirements Data Sheet(s) attached to the MR, and Buyer's specification 24590-WTP-3PS-G000-T0001.

9.2.2 Seller shall demonstrate that its quality program is in compliance with the procurement quality requirements listed in the Supplier Quality Assurance Program Requirements Data Sheet(s). The Supplier shall allow the Buyer, its agent, and DOE access to their facilities and records pertaining to this purchase order for the purpose of QA Audits and Surveillance at mutually agreed times.

9.2.3 All items shall be manufactured in accordance with the Supplier's Quality Assurance Program that has been previously evaluated and accepted by the RPP-WTP Quality Organization. The very same requirements shall be passed down to any lower tier subcontractor.

9.2.4 Seller shall submit their QA program and work plan to Buyer for review prior to commencement of work. The plan shall include documents and procedures to

implement the work and include a matrix of essential Quality Assurance elements cross referenced with the documents/procedures.

10 Configuration Management

Equipment and/or components covered by this specification are identified with Plant Item Numbers shown in the attached data sheets in section 2 of the MR. Each item shall be identified in accordance with section 8.3 of this specification.

11 Documentation and Submittals

11.1 General

11.1.1 Seller shall submit to Buyer all detailed designs, drawings, documentation, procedures, instructions, calculations, analyses, manufacturer documentation, manufacturer data, inspection reports, test reports, certifications, certificates, manuals, MSDSs, video tapes, and drawings required per this specification, the applicable codes, standards, and reference documents in section 2 of this specification, and the MR.

11.1.2 All detailed designs, drawings, assembly drawings, shop drawings, final P&IDs, MDSs, supporting calculation, supporting analyses, and all other requirements in the 60 % design stage shall be issued to the Buyer for review prior to fabrication of evaporator vessels and equipment.

11.1.3 Seller shall submit to Buyer Engineering and Quality Verification documents in the forms and quantities shown in Form G-321-E, *Engineering Document Requirements*, and Form G-321-V, *Quality Verification Document Requirements* attached to the MR, section 3.

11.1.4 Seller shall submit a report identifying any deviations and/or conflicts per section 2 of the MR to the Buyer for review.

11.1.5 Each documentation transmittal package shall have a documentation inventory sheet attached listing all documents and the number of pages each.

11.1.6 All documents submitted for review (e.g., General Arrangement, Shop Details, Calculations must contain their own unique NAME AND IDENTIFICATION NUMBER) Example:

Calculations for Item:
Document No: Calc TLP-PMP-00001-0001

11.1.7 Data sheets in section 2 of the MR shall be marked up by the Seller and submitted to the Buyer for review with the detailed design. Seller shall fill in all information that is marked as asterisk or TBD and markup actual overall

dimensions for each evaporator component, equipment, and skid based on the detailed design.

11.1.8 All drawings shall be produced per the drawing practices set forth in ASME Y14.100, Engineering Drawing Practices.

11.2 Calculations

All calculations to be provided shall be orderly, complete, and sufficiently clear to permit verification. The body of the calculations shall include:

- A concise statement of the purpose of the calculation.
- Input data, applicable criteria, and stated assumptions.
- A list of references used, including drawings, codes, standards, and computer programs (indicate the version or issue date).
- A discussion of rationale used for design assumption basis.
- Equations used for all computations.
- Numerical calculation including identification of units used.
- A concise statement addressing the calculation results and/or recommendations.
- A table of contents for complex calculations.

11.3 As-Built Drawings

11.3.1 Progress As-Builts

During construction, the Seller shall keep an updated marked-up set of progress as-built drawings on the jobsite as an accurate record of all deviations between the work, as shown on the Buyer reviewed drawings, and work as fabricated. These drawings shall be available to the Buyer for inspection at any time during regular business hours.

11.3.2 Final As-Builts

Seller shall furnish to Buyer final as-built drawings with AS-BUILT clearly printed on each sheet for all final work left in place. Seller shall accurately and neatly transfer all deviations from progress as-builts to final as-builts.

11.4 Dimensional Record Drawings

Seller shall furnish to Buyer dimensional record drawings for the separator vessel, reboiler, and recirculation pump with all their associated lifting yokes and/or lifting lugs.

11.5 Project Start

Seller shall submit drawing index and detailed schedule of engineering document submittals, material purchases, fabrication, shop test, and ready for shipment. Include bar charts or critical path method diagrams, which detail the chronological sequence of activities.

11.6 30 % Design Review

11.6.1 Provide drawings with outline dimensions, services, foundations, and mounting details of the evaporator system. Drawings shall show external envelope, including lugs, centerline(s), location and size for electrical cable, conduit, fluid, other service connections, isometrics, and details related to foundations and mountings.

11.6.2 Provide preliminary dimension, location, and layout for all evaporator components, equipment, and skids.

11.6.3 Provide preliminary design of the demister pad replacement methodology.

11.6.4 Provide preliminary system description. Describe general system functions and basis of design. It shall include a systematic process flow diagram for system operation.

11.6.5 Provide preliminary Piping and Instrumentation Diagrams (P&IDs).

11.6.6 Provide preliminary instrument control requirements. Include system interlocks and control philosophy. Provide flow charts, schematics, logic diagrams, or function diagrams showing the equipment functional controls.

11.6.7 Provide document that describes the proposed equipment skids, including sketches of typical skids indicating skid-to-skid and skid-to-building interfaces, as well as the components included.

11.6.8 Identify all large and heavy items of equipment to ensure lifting capability during construction, maintenance, and decommissioning.

11.6.9 Provide motor data sheets per Buyer's specifications 24590-WTP-3PS-MUMI-T0002 and 24590-WTP-3PS-EKP0-T0001.

11.7 60 % Design Review

11.7.1 Provide final P&IDs.

11.7.2 Provide final skid constructability study.

11.7.3 Provide final evaporator component, equipment, skid size, and layout.

11.7.4 Provide assembly drawings.

11.7.5 Provide shop detail drawings with sufficient detail to facilitate fabrication, manufacture, or installation. This includes a complete Bill of Materials (BOM), pipe spool drawings, internal piping and wiring details, cross-section details, and structural details.

11.7.6 Deleted.

11.7.7 Submit completed Instrument and Mechanical data sheets for all instruments and equipment, utilizing Buyer's supplied instrument data sheets attached in section 2 of the MR as templates.

11.7.8 Provide functional test setpoints and recommended operating set points for the instrumentation and control packaged systems.

11.7.9 Provide final instrument control requirements including control definitions, system interlocks, alarms, and control philosophies. Control and sequencing requirements of the system and its components shall be detailed as described in section 3.5 of 24590-WTP-3PS-JQ07-T0001, *Engineering Specification for Instrumentation for Package Systems*.

11.7.10 Submit all final detailed drawings, calculations, analyses, and information necessary for evaporator vessels and equipment fabrication.

11.7.11 Submit all FMEA documentation.

11.7.12 Provide final motor data sheets and nameplates per Buyer's specifications 24590-WTP-3PS-MUMI-T0002 and 24590-WTP-3PS-EKP0-T0001.

11.8 90 % Design Review

11.8.1 Provide detailed written procedures, instructions, and drawings (including all lifting requirements) for evaporator system erection/installation.

11.8.2 Provide complete remote installation instructions for the utilization of the hot cell existing cranes for the needed reorientation, installation, and extraction of the reboiler.

11.8.3 Deleted.

11.8.4 Provide list of required spares.

11.8.5 Provide startup and commissioning spares list, including all components or equipment that may be needed during startup and commissioning.

11.8.6 Provide operation manuals with detailed written instructions describing how the evaporator systems and components should be operated. Manuals shall include specific instructions, procedures, and illustrations for the following:

11.8.6.1 Safety Precautions – List personnel hazards and equipment or product safety precautions for all operating conditions.

11.8.6.2 Operator Prestart – Include requirements to set up and prepare the system for use.

11.8.6.3 Startup, Shutdown, and Post-shutdown Procedures – Include a control sequence for each of these operations.

11.8.6.4 Normal Operations – Include control diagrams with data to explain operation and control of systems and specific equipment.

11.8.6.5 Emergency Operations – Include emergency procedures for equipment malfunctions to permit a short period of continued operation or to shut down the equipment to prevent further damage to systems and equipment. Include emergency shutdown instructions for fire, over-pressure, spills, or other foreseeable contingencies. Provide guidance on emergency operations of all utility systems including valve locations and portions of systems controlled.

11.8.6.6 Operator Service Requirements – Include instructions for services to be performed by the operator, such as lubrication, adjustments, and inspections.

11.8.6.7 Environmental Conditions – Include a list of environmental conditions (temperature, humidity, and other relevant data) which are best suited for each product or piece of equipment and describe conditions under which equipment should not be allowed to run.

11.8.6.8 Lay-up Instructions – Include step-by-step instructions for lay-up.

11.8.7 Provide maintenance manuals with detailed written instructions to disassemble, reassemble, and maintain systems or components in an operating condition. Manuals shall include specific instructions, procedures, and illustrations for the following phases of maintenance:

11.8.7.1 Preventive Maintenance - Include the following information for preventive and scheduled maintenance to minimize corrective maintenance and repair:

11.8.7.1.1 Lubrication Data – Include lubrication data, other than instructions for lubrication, in accordance with operator service requirements to be included in operation manuals.

11.8.7.1.2 Preventive Maintenance Plan and Schedule – Include manufacturer's schedule for routine preventive maintenance, inspections, testing, and adjustments required to ensure proper and economical operation and to minimize corrective maintenance and repair. Provide manufacturer's projection of preventive maintenance frequency of work, and hours to complete the task. Provide surveillance and in-service inspection recommendations.

11.8.7.2 Corrective Maintenance – Include manufacturer's schedule for procedures and instructions for correcting problems and making repairs. Include the following information for performing corrective maintenance:

11.8.7.2.1 Troubleshooting Guide and Diagnostic Techniques – Include step-by-step procedures to promptly isolate the cause of typical malfunctions. Describe clearly why the checkout is performed and what conditions are to be sought. Identify tests or inspections and test equipment required to determine whether parts and equipment may be reused or require replacement.

11.8.7.2.2 Deleted.

11.8.7.2.3 Maintenance and Repair Procedures – Include instructions and list tools required to restore product or equipment to proper condition or operating standards.

11.8.7.2.4 Removal and Replacement Instructions – Include step-by-step procedures and list required tools and supplies for removal, replacement, disassembly, and assembly of components, assemblies, subassemblies, accessories, and attachments. Provide all tolerances, dimensions, settings, and adjustments required. Instructions shall include a combination of text and illustrations.

11.8.7.2.5 Recommended Spare Parts and Supply Lists – Include list of spare parts and supplies required for maintenance and repair to ensure continued service or operation without unreasonable delays. Include the cost of each item.

11.8.7.2.6 MSDSs – Include MSDSs for all chemicals and hazardous materials supplied as part of the product, system, or equipment. In addition, include MSDSs for all chemicals and hazardous materials required to be added (lubricants, antifreeze, etc.).

11.8.7.2.7 Parts Identification – Provide identification and coverage for all parts of each component, assembly, subassembly, and accessory of the end items subject to replacement. Include special hardware requirements, such as requirement to use high-strength bolts and nuts. Identify parts by make, model, serial number, and source of supply to allow reordering without further identification. Provide clear and legible illustrations, drawings, and exploded views to enable easy identification of the items. When illustrations omit the part numbers and description, both the illustration and separate listing shall show the index, reference, or key number which will cross-reference the illustrated part to the listed

part. Parts shown in the listings shall be grouped by components, assemblies, and subassemblies.

11.8.7.2.8 Other than Seller's Commercial Practice – End item manufacturer may add a cross-reference to implement component assemblies and parts requirements when implementation in manual form varies significantly from the style, format, and method of Seller's standard commercial practice.

11.8.7.2.9 Warranty Information – List and explain the various warranties and include the servicing and technical precautions prescribed by the Seller or contract documents to keep warranties in force.

11.8.7.2.10 Personnel Training Requirements – Provide information available from the Seller to use for training designated personnel to operate and maintain the equipment and systems properly.

11.8.7.3 Calibration Testing Equipment and Special Tool Information – Include information on test equipment required to perform specific tests and on special tools needed for the operation, maintenance, and repair of components.

11.8.8 Provide system, component, and instrumentation descriptions as identified below:

11.8.8.1 System Descriptions - Include comprehensive system description describing, in detail, how the overall system functions, and the basic design basis. Include component interfaces and interactions. Provide a systematic process flow diagram for system operation.

11.8.8.2 Component Descriptions – Include comprehensive component descriptions describing, in detail, how each individual process component functions and the basic design basis. Include other component interfaces and interactions. Provide a systematic process flow diagram for component operation.

11.8.8.3 Instrument Descriptions – Include a list or table describing instrument ID number, ID name, location, and basic operating function. Include separately, in systematic descriptive detail, instrument controls and logic that correspond to instrumentation and logic diagrams.

11.8.9 Provide design and operational requirements per the following:

11.8.9.1 Design requirements – Include a list or table describing the maximum design limits and conditions required to safely operate the equipment (i.e., temperatures, pressures, etc.).

11.8.9.2 Operational requirements – Include a list or table describing the normal operating ranges for equipment (i.e., temperatures, pressures, etc.).

11.8.10 Provide analysis and design reports, including analytical data (stress, electrical loading, fluid dynamics, etc.) which demonstrates that an item satisfies all specified requirements.

11.8.11 Provide seismic analysis or test data reports providing data and demonstrating suitability of materials, components, or systems in relation to the conditions imposed by the stated seismic criteria.

11.8.12 Provide thermal stress analysis or test data reports providing data and demonstrating suitability of materials, components, or systems in relation to the conditions imposed by thermal stresses.

11.8.13 Provide site storage and handling manuals including the requirements and time period for lubrication, rotation, heating, lifting, or other handling requirements to prevent damage or deterioration during storage and handling at job site. Include return shipping instructions.

11.8.14 Provide inspection and test plan including detailed descriptions of the inspections and tests planned during the receipt, manufacturing, and conformance verification activities. Include identification of witness and hold points.

11.8.15 Provide welding procedures, specifications, and supporting qualification records required for welding, hard facing, overlaying, brazing, and soldering.

11.8.16 Provide material control procedures including controlling issuance, handling, storage, and traceability of materials such as weld rod.

11.8.17 Provide PMI procedures for performing PMI testing of materials.

11.8.18 Provide repair procedures including controlling material removal and replacement by welding, brazing, etc., subsequent thermal treatments, and final acceptance inspection.

11.8.19 Provide pressure testing procedures including hydro, air, leak, separation, or vacuum test procedures for performing hydrostatic or pneumatic structural integrity and leakage tests.

11.8.20 Provide inspection procedures for the purpose of determining that specified requirements (i.e., dimensions, properties, performance results, etc.) are met.

11.8.21 Provide radiographic testing procedures for identifying the presence and certain characteristics of discontinuities and inclusions in materials by x-ray or gamma ray exposure of photographic film.

11.8.22 Provide liquid penetrant testing procedures for detection of surface discontinuities in materials by application of a penetrating liquid in conjunction with suitable developing techniques.

11.8.23 Provide functional shop test procedures to demonstrate that design function and operational parameters are met (e.g., pump performance data, valve stroking, load, temperature rise, calibration, environment, etc.).

11.8.24 Provide integrated acceptance test requirements document per engineering specifications to demonstrate design function and operational parameters for the complete assembled evaporator systems.

11.8.25 Deleted.

11.8.26 Provide shipping preparation procedures for cleaning, packaging, and handling.

11.9 Final Design Review

Provide final design report including all design documents, manuals, and drawings that are specified in this specification. All procedures and instructions shall be completed and submitted to the Buyer a minimum of eight (8) weeks prior to evaporator components, equipment, and skid shipment.

APPENDIX A

EVAPORATOR STREAM DATA

Cesium Concentrate Product Stream

	Units	
Total	kg/day	8.10E+03
SpG		1.46E+00
Volume	liters	5.67E+03
Liquids		
Total	kg	8.10E+03
Na Molarity	gmol/liter	5.08E+00
SpG		1.46E+00
Volume	liters	5.67E+03
pH		
129-I	kg	3.42E-03
134-Cs	kg	1.16E-05
137-Cs	kg	1.00E+01
14-C	kg	6.02E-06
126-Sn	kg	9.73E-05
233-U	kg	1.51E-05
235-U	kg	2.75E-02
152-Eu	kg	8.83E-08
154-Eu	kg	1.31E-05
155-Eu	kg	7.56E-07
237-Np	kg	4.28E-03
238-Pu	kg	2.36E-07
239-Pu	kg	3.51E-04
240-Pu	kg	2.45E-05
241-Am	kg	2.68E-04
241-Pu	kg	3.23E-06
242-Cm	kg	1.26E-08
243-Am	kg	3.97E-07
243-Cm	kg	2.09E-07
244-Cm	kg	1.74E-06
3-H	kg	5.63E-09
60-Co	kg	9.79E-09
90-Sr	kg	1.27E-04
99-Tc	kg	7.62E-01
Ag+	kg	5.45E-03
Al+3	kg	2.80E+01
B+3	kg	3.39E-02
Ba+2	kg	1.46E-02
Bi+3	kg	3.15E-02
Ca+2	kg	1.09E-01
Cd+2	kg	5.06E-03
Cl-	kg	6.40E+00
CO3-2	kg	4.74E+01
Cr(TOTAL)	kg	1.20E+00

Cs+	kg	5.36E+00
F-	kg	6.33E+00
Fe+3	kg	1.61E-01
Hg+2	kg	6.64E-03
K+	kg	1.23E+01
La+3	kg	3.03E-03
Li+	kg	4.35E-03
Mg+2	kg	1.99E-02
Mn+4	kg	1.04E-02
Mo+6	kg	2.64E-02
Na+	kg	6.62E+02
NH3	kg	3.72E+00
Ni+2	kg	3.13E-02
NO2-	kg	9.86E+01
NO3-	kg	2.79E+03
OH(BOUND)	kg	4.41E+01
OH-	kg	5.83E+01
Pb+2	kg	8.38E-02
Phosphor containing components	kg	1.07E+01
Se+6	kg	2.07E-02
Si+4	kg	6.80E-01
SO4-2	kg	6.87E+00
Sr+2	kg	6.90E-03
Ti+4	kg	1.95E-03
TOC	kg	5.58E+00
U(TOTAL)	kg	3.81E-02
Zn+2	kg	4.49E-03
Zr+4	kg	3.10E-01
H2O	kg	4.25E+03
H+	kg	4.50E+01
CO2	kg	0.00E+00

Cesium Eluate Stream

	Units	Eluate Stream Sent to the Evaporator	Rinse Stream displaced to Evaporator
Total	kg/day	1.72E+04	3.29E+03
SpG		1.02E+00	1.02E+00
Volume	liters/day	1.68E+04	3.24E+03
Liquids			
Total	kg/day	1.72E+04	3.29E+03
Na Molarity	gmol/liter	9.24E-02	3.97E-02
SpG		1.02E+00	1.02E+00
Volume	liters/day	1.68E+04	3.24E+03
pH		3.74E-01	5.17E-01
129-I	kg/day	1.90E-04	5.46E-08
134-Cs	kg/day	6.44E-07	3.40E-13
137-Cs	kg/day	5.57E-01	2.94E-07
14-C	kg/day	3.34E-07	9.63E-11
126-Sn	kg/day	5.40E-06	1.56E-09
233-U	kg/day	8.37E-07	2.41E-10
235-U	kg/day	1.53E-03	4.39E-07
152-Eu	kg/day	4.91E-09	1.41E-12
154-Eu	kg/day	7.26E-07	2.09E-10
155-Eu	kg/day	4.20E-08	1.21E-11
237-Np	kg/day	2.38E-04	6.84E-08
238-Pu	kg/day	1.31E-08	3.78E-12
239-Pu	kg/day	1.95E-05	5.61E-09
240-Pu	kg/day	1.36E-06	3.91E-10
241-Am	kg/day	1.49E-05	4.29E-09
241-Pu	kg/day	1.79E-07	5.16E-11
242-Cm	kg/day	6.97E-10	2.01E-13
243-Am	kg/day	2.21E-08	6.36E-12
243-Cm	kg/day	1.16E-08	3.35E-12
244-Cm	kg/day	9.65E-08	2.78E-11
3-H	kg/day	3.12E-10	9.00E-14
60-Co	kg/day	5.43E-10	1.57E-13
90-Sr	kg/day	7.05E-06	2.03E-09
99-Tc	kg/day	4.23E-02	1.22E-05
Ag+	kg/day	3.03E-04	8.71E-08
Al+3	kg/day	1.56E+00	4.48E-04
B+3	kg/day	1.88E-03	5.41E-07
Ba+2	kg/day	8.14E-04	2.34E-07
Bi+3	kg/day	1.75E-03	5.03E-07
Ca+2	kg/day	6.08E-03	1.75E-06

Cd+2	kg/day	2.81E-04	8.09E-08
Cl-	kg/day	3.55E-01	1.02E-04
CO3-2	kg/day	2.63E+00	7.58E-04
Cr(TOTAL)	kg/day	6.64E-02	1.91E-05
Cs+	kg/day	2.98E-01	1.57E-07
F-	kg/day	3.52E-01	1.01E-04
Fe+3	kg/day	8.92E-03	2.57E-06
Hg+2	kg/day	3.69E-04	1.06E-07
K+	kg/day	6.83E-01	1.97E-04
La+3	kg/day	1.68E-04	4.85E-08
Li+	kg/day	2.42E-04	6.96E-08
Mg+2	kg/day	1.10E-03	3.18E-07
Mn+4	kg/day	5.75E-04	1.66E-07
Mo+6	kg/day	1.47E-03	4.23E-07
Na+	kg/day	3.68E+01	4.73E-03
NH3	kg/day	2.07E-01	5.95E-05
Ni+2	kg/day	1.74E-03	5.01E-07
NO2-	kg/day	5.48E+00	1.58E-03
NO3-	kg/day	4.58E+02	6.14E+01
OH(BOUND)	kg/day	2.45E+00	7.06E-04
OH-	kg/day	3.24E+00	9.32E-04
Pb+2	kg/day	4.65E-03	1.34E-06
Phosphor containing components	kg/day	5.97E-01	1.72E-04
Se+6	kg/day	1.15E-03	3.31E-07
Si+4	kg/day	3.78E-02	1.09E-05
SO4-2	kg/day	3.82E-01	1.10E-04
Sr+2	kg/day	3.83E-04	1.10E-07
Ti+4	kg/day	1.08E-04	3.12E-08
TOC	kg/day	3.10E-01	8.92E-05
U(TOTAL)	kg/day	2.12E-03	6.10E-07
Zn+2	kg/day	2.49E-04	7.18E-08
Zr+4	kg/day	1.72E-02	4.96E-06
H2O	kg/day	1.67E+04	3.23E+03
H+	kg/day	7.16E+00	9.92E-01
CO2	kg/day	0.00E+00	0.00E+00

APPENDIX B

CNP Nitric Acid Recovery Forced Circulation Vacuum Evaporator Thru-Put Flow Chart

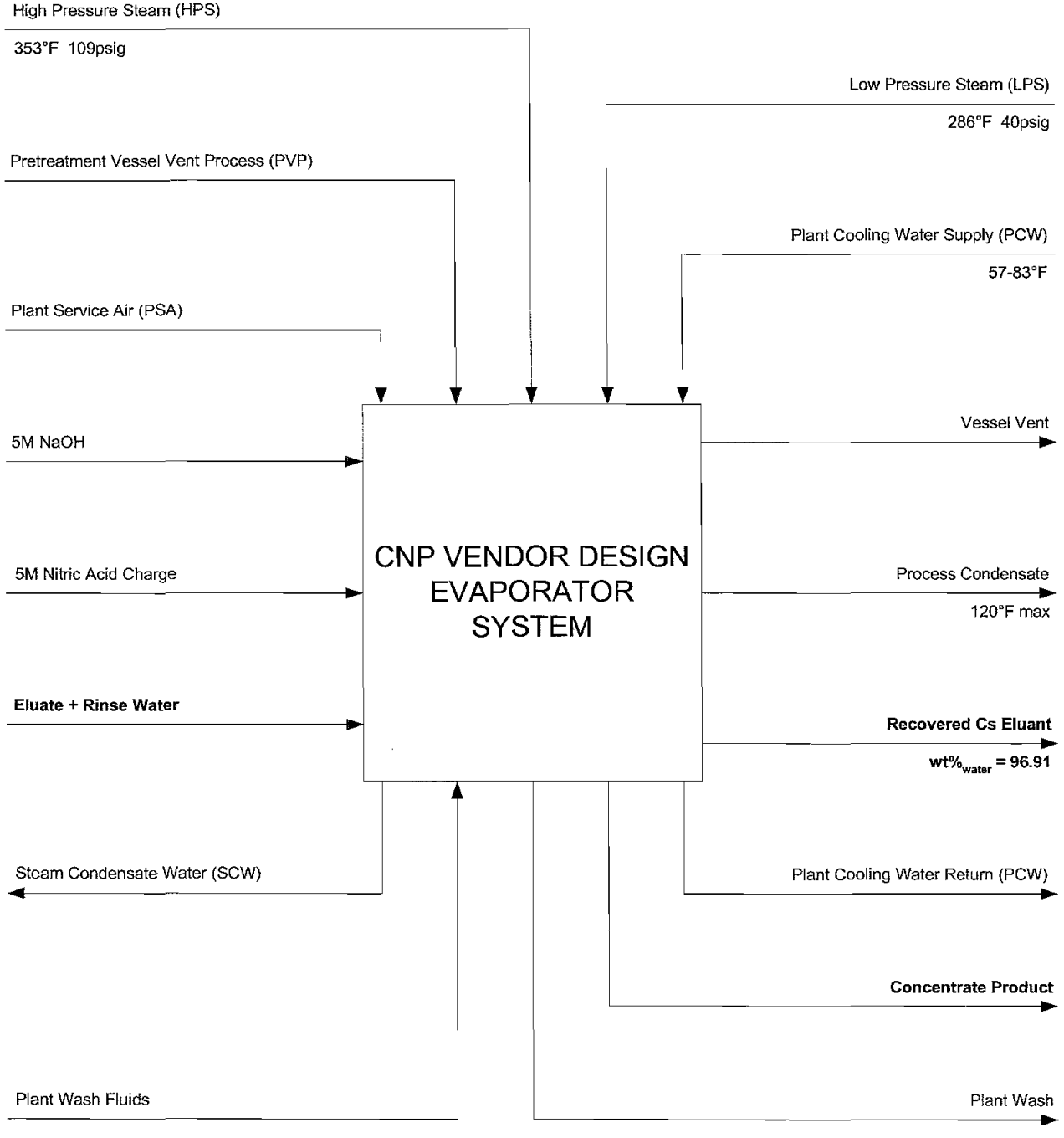

APPENDIX C

EVAPORATOR PROCESS DATA

PROCESS DATA SHEET: Evaporator			PLANT ITEM No. 24590-PTF-CNP-EVAP-00001
Project:	RPP-WTP	System:	CNP
Project No:	24590	Description:	Cs Nitric Acid Recovery Evaporator
Site:	Hanford	Supporting Calcs No.	
Building No.:	10	Associated Drawings:	24590-PTF-M5-V17T-000014, Rev. B

UTILITIES DATA	Units	Cooling Water	Low Pressure Steam	High Pressure Steam	Compressed Air	Instrument Air
Temperature	°F	83	286	343	60	60
Pressure	psig	65	40	109	150	100

		Feed to Evaporator		Acid Charge			Concentrate			Evaporator Overheads		Recovered Eluant		Condensate Product	
PROCESS DATA	Units	Minimum	Maximum	Minimum	Normal	Maximum	Minimum	Normal	Maximum	Minimum (Note 6)	Maximum (Note 6)	Minimum (Note 6)	Maximum (Note 6)	Minimum (Note 6)	Maximum (Note 6)
Fluid Flow (Note 4)	lb_m /hr	3,600	5,100	Note 4	Note 4	Note 4	Note 4	Note 4	Note 4	3600	5,100	3,000	4,500	600	600
Liquid Flow (Note 4)	gpm	6.9	10.0	Note 4	Note 4	Note 4	Note 4	Note 4	Note 4	N/A	N/A	5.9	8.9	1.2	1.22
Vapor Flow	lb_m /hr	N/A	N/A	N/A	N/A	N/A	N/A	N/A	N/A	3600	5100	N/A	N/A	N/A	N/A
Temperature (Note 6)	°F	59	77	59	77	113	59	122 - 140	230	130	140	115	140	63	140
HNO3 Molarity	gmol/l	0.4	0.5	5	7.2	8	4.2	Note 2	8	0.4	0.5	0.45	0.55	0	0
Na Molarity	gmol/l	0	0.1 (Note 5)	0	0	0	0	Note 2	2.6	0	0	0	0	0	0
Density	lb_m /ft^3	62.2	64.4	72.4	76.7	78.0	72.4	Note 2	85.5	0.0045	0.0071	63.3	63.6	61.4	62.4
Specific Gravity		0.996	1.03	1.16	1.23	1.25	1.16	Note 2	1.37	N/A	N/A	0.998	1.02	0.98	1
Viscosity	cP	0.85	1.0	1.25	1.47	1.57	1.25	Note 2	2.46	0.0099	0.0103	0.55	1.18	0.46	0.95
Specific Heat	BTU/lb_m°F	0.97	1	0.68	0.69	0.75	0.68	Note 2	0.83	0.45	0.46	0.97	1	0.97	1.00
Thermal Conductivity	BTU/hr ft °F	0.32	0.37	0.27	0.28	0.33	0.27	Note 2	0.32	0.012	0.013	0.32	0.37	0.34	0.38
Latent Heat	BTU/lb_m									1,030	1,090				

Notes:
1. Minimum and maximum fluid properties are not associated with minimum and maximum fluid flow rates.
2. The evaporator concentrates in batches, thus every cycle the concentrate should range from minimum to maximum fluid properties listed, or vice versa depending on the property.
3. Vacuum system enables concentration of feed at reduced temperature.
4. The Cs concentrate is transfered out and replaced by a fresh acid charge when NaNO3 is at 80% of its solubility limit. The estimated frequency for transfering a 1500 gallon batch of concentrate is 15 elution cycles (33 h per cycle) 495 h. Flow rate is approximately 60 gpm.
5. Highest expected value shown. Normal concentration of Na+ in eluate is expected to be 0.043 M.
6. The fluid property ranges shown are the expected operating minimum and maximums. The vedor design will depict the normal operating ranges based on the designed pressure drops through the system. The maximum temperature that may be seen under accident scenario (self boiling) is 230F
7. Only a portion of the condensed vapor is condensate, the remainded of the condensate is refluxed to the rectifier.
8. The normal operating pressure is 1.45 psia in the separator vessel.

APPENDIX D

SEPARATOR VESSEL SKID EMBED LAYOUT

FIGURES DELETED

APPENDIX E

HOT CELL REMOTE IMPACT WRENCH

FIGURES DELETED

APPENDIX F

EVAPORATOR EQUIPMENT SKIDS LOCATION AND LAYOUT SKETCHES

FIGURES DELETED

APPENDIX G

MINIMUM NOZZLE DESIGN LOADS

FIGURES DELETED

APPENDIX H

EVAPORATOR EQUIPMENT GENERAL ARRANGEMENT

CNP EVAPORATOR GENERAL LAYOUT

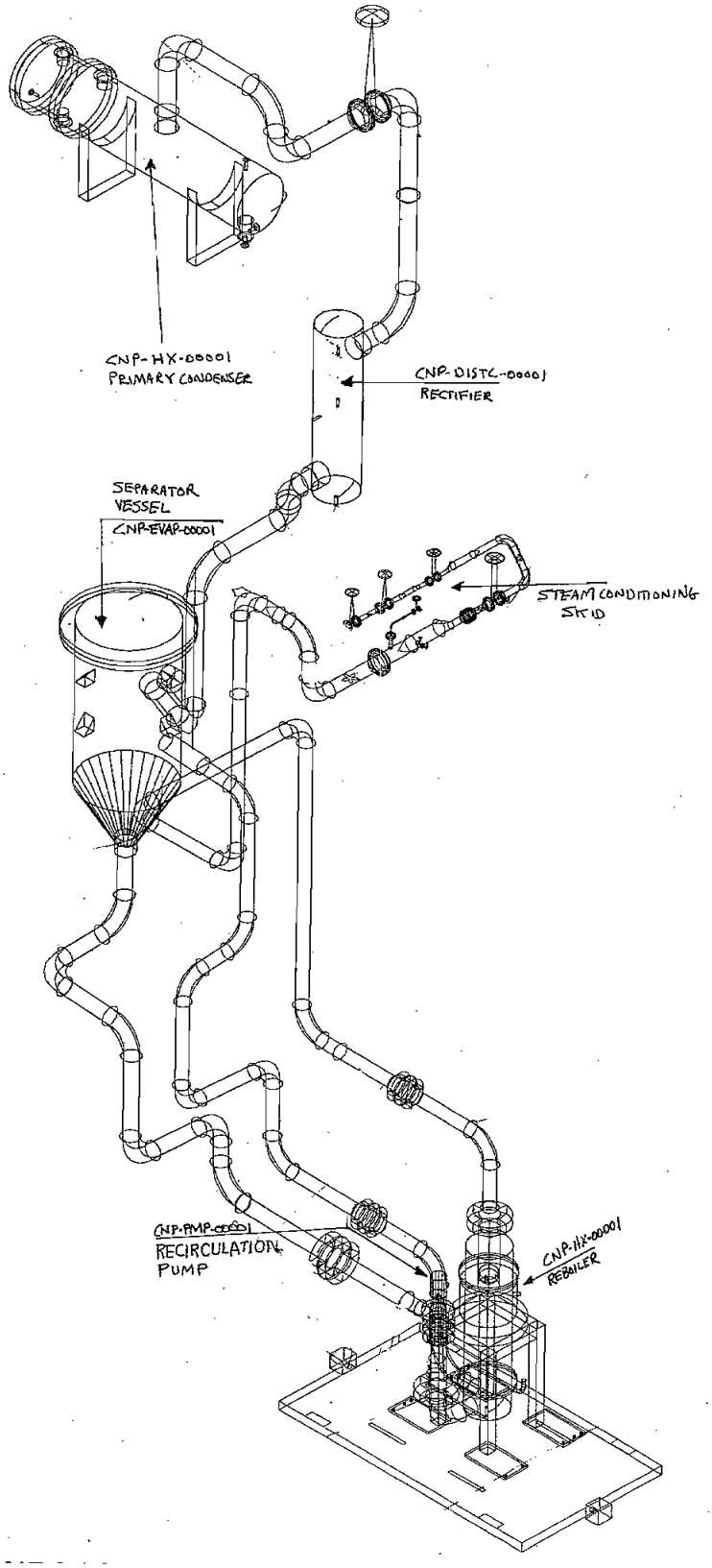

SEPARATOR VESSEL & SUPPORT FRAME

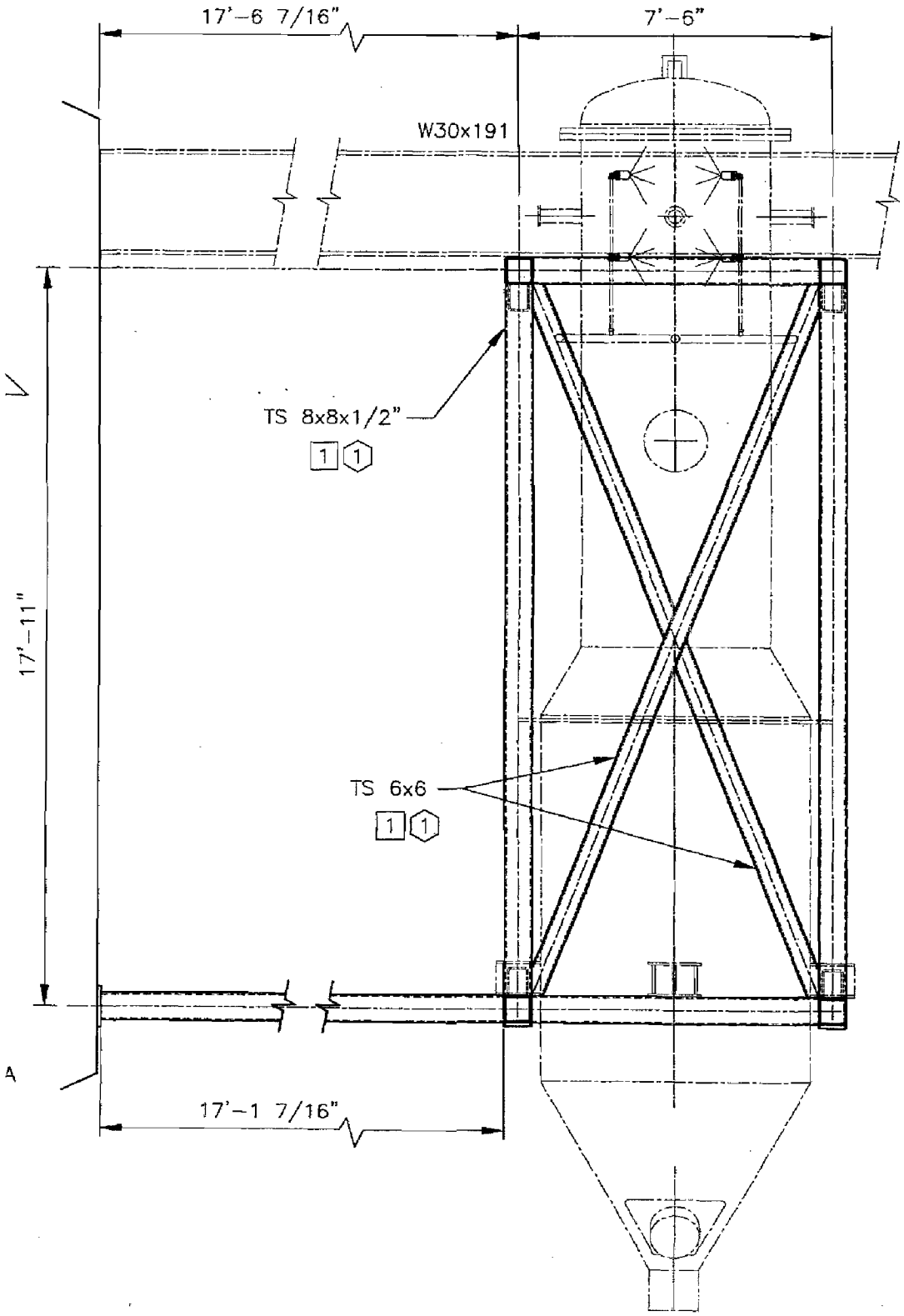

REBOILER & SUPPORT FRAME

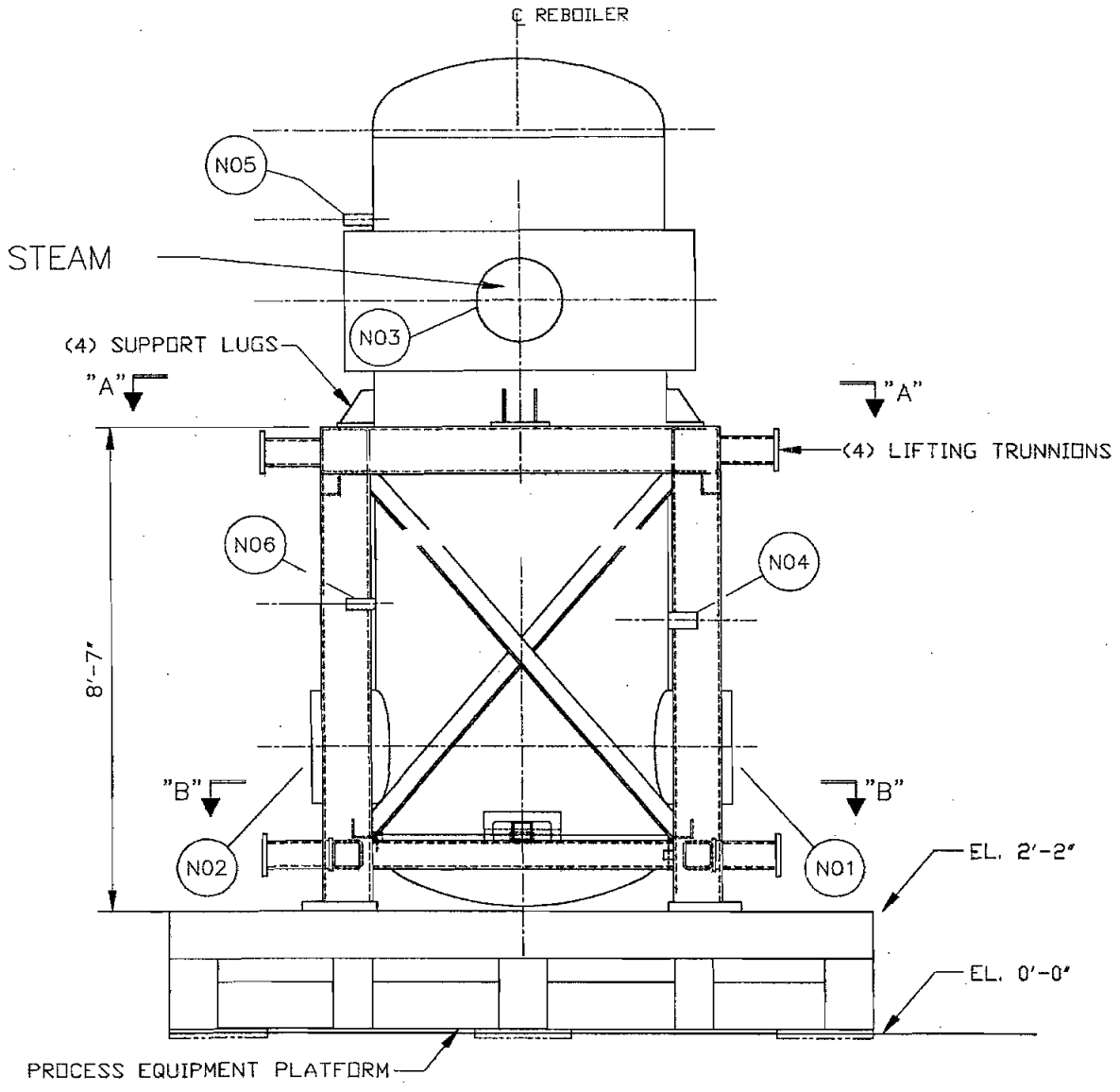

RECTIFIER/DISTILLATION COLUMN & SUPPORT FRAME

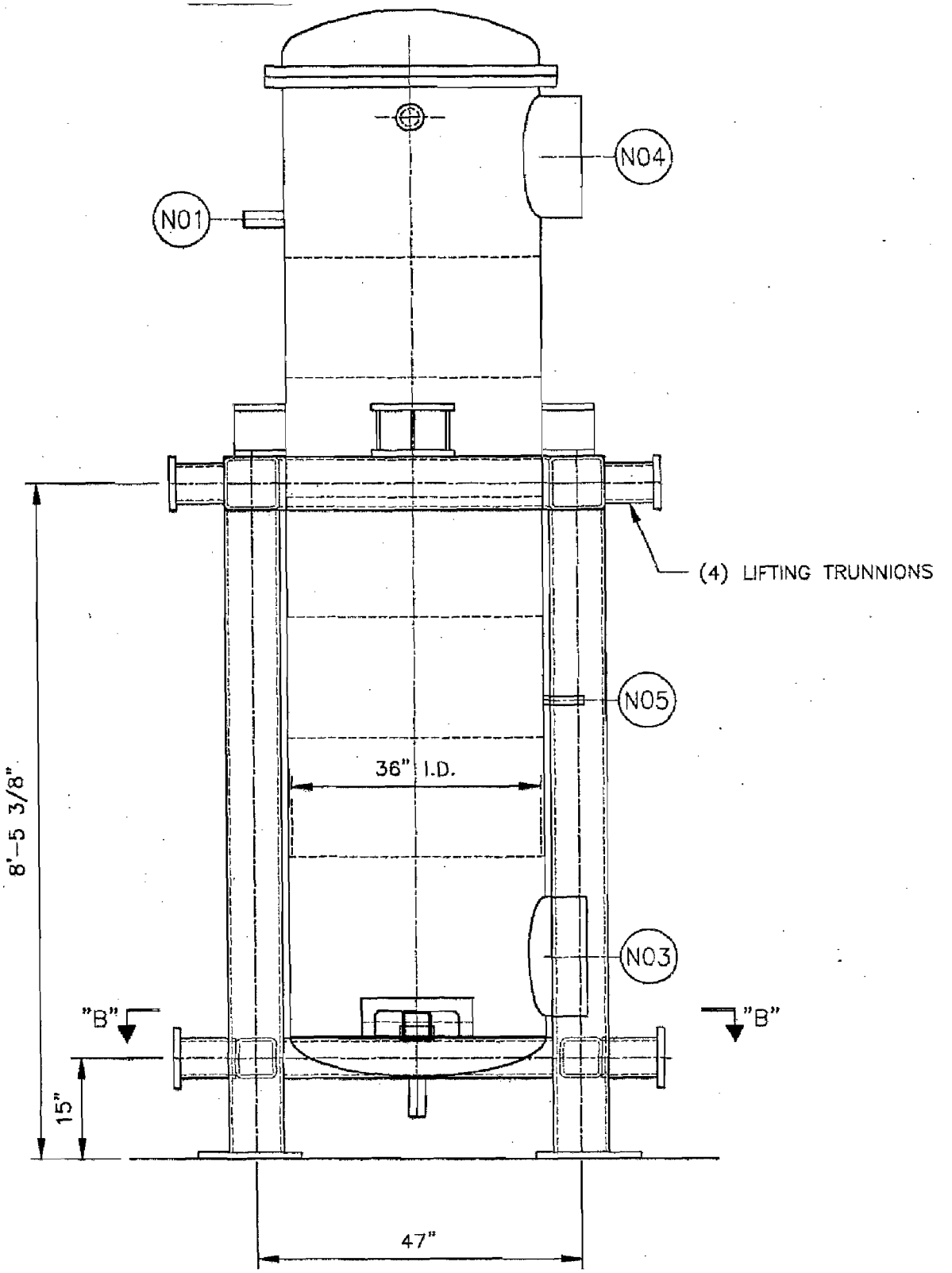

CONDENSER SKID

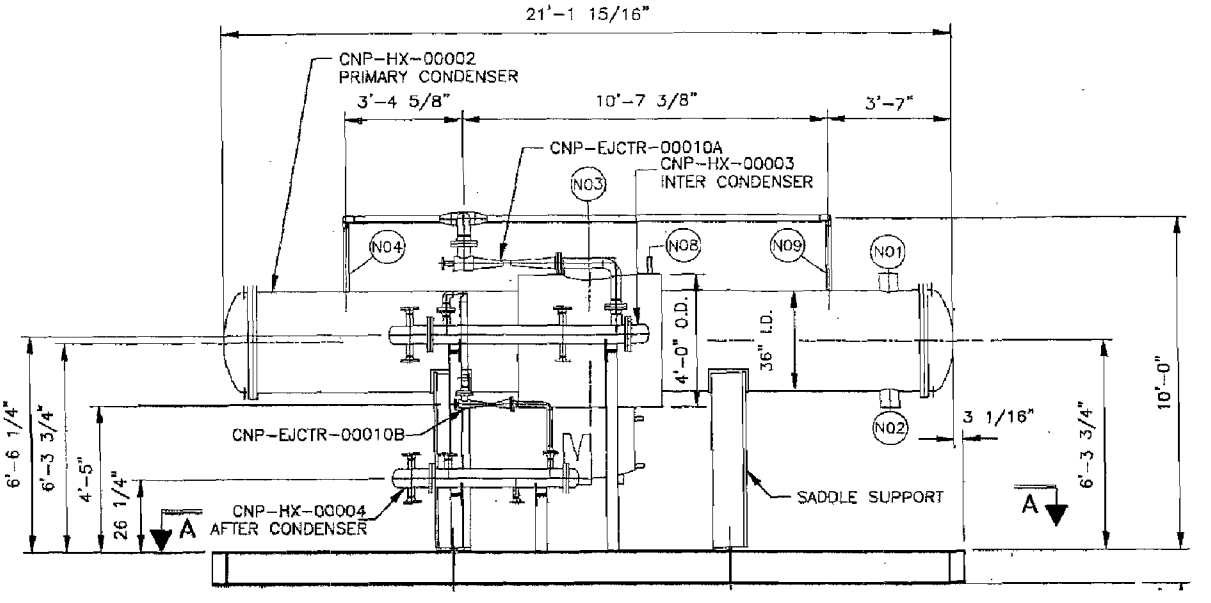

STEAM CONDITIONING SKID

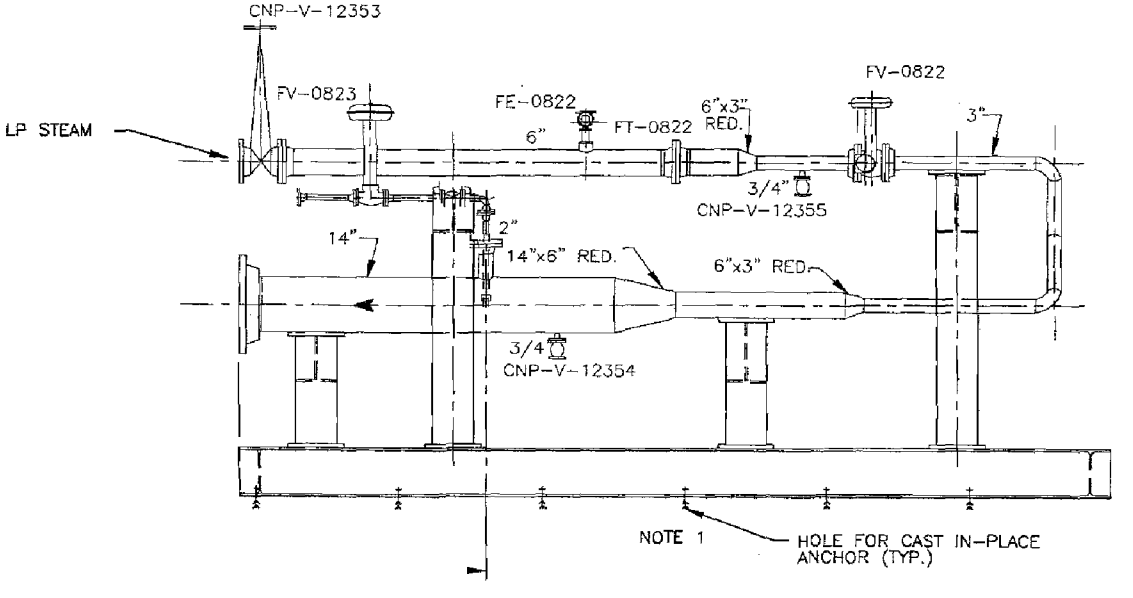

R10700107

RIVER PROTECTION PROJECT – WASTE TREATMENT PLANT

ENGINEERING SPECIFICATION

FOR

PTF Vessel Vent Caustic Scrubber

ISSUED BY
RPP-WTP PDC

Content applicable to ALARA? ☒ **Yes** ☐ **No**

ADR No.
24590-PTF-ADR-M-02-057

Rev
1

Quality Level
Q
DOE Contract No. DE-AC27-01RV14136

NOTE: Contents of this document are Dangerous Waste Permit affecting.

REV	DATE	BY	CHECK	REVIEW	E&NS	QA	DPEM
1	7/24/06	D Rickettson	L Donovan	B Makadia	J Hendricks	W Dey for S. Akerman	J Julyk
0	07/24/03	Kar Wei Chin	N Sentanu	C Morley	N/A	G Warner	M Hoffman for G Duncan

SPECIFICATION No.
24590-PTF-3PS-MKAS-T0001

Rev
1

Revision History

Revision	Reason for Revision
0	Issued for Purchase
1	Incorporated SCN's, 24590-PTF-3PN-MKAS-00001, 24590-PTF-3PN-MKAS-00002, & 24590-PTF-3PN-MKAS-00003. Added ANSI / AISC N690 NDE for ring beam, specifications for lateral restraint and Seismic Anchor Motions (SAM). Added Specification for Pressure Vessel Fatigue Analysis.

Contents

1 Scope 1
1.1 Project Description and Location 1
1.2 Equipment, Material, and Services Required 1
1.3 Work by Others 1
1.4 Acronyms, Abbreviations and Definitions 2
1.5 Safety/Quality Classifications 3
2 Applicable Documents 4
2.1 General 4
2.2 Codes and Standards 4
2.3 Reference Documents/Drawings 4
3 Design Requirements 5
3.1 General 5
3.2 Basic Description 7
3.3 Performance 8
3.4 Scrubber Design and Standard Details 9
3.5 Environmental Conditions 9
3.6 Loading 10
3.7 Instrumentation and Control Requirements 10
3.8 Accessibility and Maintenance 10
4 Materials 12
4.1 General 12
4.2 Prohibited Materials 12
5 Fabrication 12
5.1 General 12
5.2 Welding 13
6 Tests and Inspections 13
6.1 General 13
7 Preparation for Shipment 14
7.1 General 14
7.2 Tagging 14
7.3 Shipping, Handling and Storage Instructions 15
8 Quality Assurance 15
8.1 General Requirements 15

8.2 Quality Related Components 15
9 Configuration Management 16
10 Documentation and Submittals 16
10.1 General 16
10.2 Calculations 16
10.3 Schedules 17

1 Scope

1.1 Project Description and Location

The Hanford Tank Waste Treatment and Immobilization Plant (WTP) is a complex of waste treatment facilities where the US Department of Energy (DOE) Hanford Site tank waste will be pretreated and immobilized into a stable glass form via vitrification. The WTP contractor will design, build, and start up the WTP pretreatment and vitrification facilities for the DOE Office of River Protection (ORP).

The Hanford Site occupies an area of about 560 square miles along the Columbia River, north of Richland, WA in the USA. The WTP facilities will be constructed at the 200 East Area of the Hanford Site. The site elevation varies from 662 feet to 684 feet above mean sea level.

1.2 Equipment, Material, and Services Required

This specification establishes the minimum requirements for the performance, design, analysis, materials, fabrication, testing, inspection, quality assurance (QA), qualification, documentation, and preparation for shipment of the Vessel Vent Caustic Scrubber, plant item number 24590-PTF-MK-PVP-SCB-00002, for use in the WTP Pretreatment Facility (PTF).

The scope of work for the Seller includes all work specifically defined in this specification and its addenda and attachments. Work shall include, but shall not be limited to the following:

1.2.1 Provide design, materials, fabrication, testing, inspection, preparation for shipment, documentation, and submittals of a Vessel Vent Caustic Scrubber, plant item number 24590-PTF-MK-PVP-SCB-00002 in accordance with this specification, its addenda and attachments, material requisition # 24590-QL-MRA-MKAS-00002, and referenced codes, standards and Buyer documents.

1.2.2 Provide written (process, mechanical and hydraulic) guarantee that all equipment and components supplied by the Seller shall perform to the requirements of this specification, material requisition # 24590-QL-MRA-MKAS-00002, and referenced codes, standards and Buyer documents.

1.2.3 Perform the NDE for the ring beam as specified on the Mechanical Data Sheet, 24590-PTF-MKD-PVP-00002.

1.2.4 Provide design, materials, fabrication, testing, inspection, preparation for shipping, documentation, and submittals for the Vessel Vent Caustic Scrubber lateral restraint.

1.2.5 Provide Seismic Anchor Motion (SAM) for each vessel nozzle.

1.3 Work by Others

Any item not specifically listed as being supplied by the Buyer shall be provided by the Seller. The Buyer shall supply the following:

1.3.1 Shipping of the Vessel Vent Caustic Scrubber.

1.3.2 Unloading, storage and installation labor of all materials and equipment at the Buyer's job-site.

1.3.3 Supply and installation of instrumentation and controls.

1.3.4 The Buyer is responsible for the design of the ring beam for the vessel support.

1.3.5 Embeds will be provided at elevation 41'-6" for the lateral restraint.

1.3.6 Field welding of the lateral restraint to the embed plates at elevation 41'-6".

1.4 Acronyms, Abbreviations and Definitions

1.4.1 Acronyms and Abbreviations

APC	**Additional Protection Class**
ASME	American Society of Mechanical Engineers
DBE	Design Basis Earthquake
DF	Decontamination Factor
DOE	US Department of Energy
HEME	High Efficiency Mist Eliminator
ITS	Important to Safety
MDS	Mechanical Data Sheet
MR	Material Requisition
MSDS	Material Safety Data Sheet
NO_X	Nitrogen Oxides
ORP	Office of River Protection
PTF	Pretreatment Facility
PVP	Pretreatment Vessel Vent Process System
QA	Quality Assurance
QAP	Quality Assurance Program
QL	Quality Level
SC	**Safety Class**
SDC	Safety Design Class
SDS	Safety Design Significant
SS	**Safety Significant**
SSC	System, Structure, and Component
WG	Water Gauge
WTP	Hanford Tank Waste Treatment and Immobilization Plant

1.4.2 Quality Level (**Q**)

The quality level identifies the quality requirements to be applied to the equipment. The identified quality levels are Q, and CM (Commercial). Quality requirements are specifically defined on the associated mechanical data sheets (MDSs) and supplier quality assurance program (QAP) requirements data sheets.

1.4.3 Seismic Category (SC)

Specific requirements for each seismic category are defined in reference documents listed in section 2.3 of this specification.

1.4.4 Other Definitions

Black Cell (R5·C5): Is a sealed concrete structure containing very high radiation and contamination where human access is normally prohibited during the normal operating lifetime of the cell and maintenance is generally not performed in the cell.

C5: Contamination classification for plant areas that are considered high contamination areas. Access to C5 areas is not normally permitted.

Decontamination Factor (DF): Equals the ratio of the concentration of a component in the inlet gas versus the concentration of the same component in the outlet gas.

Design Basis Earthquake (DBE): A specification of the ground motion at the site. For the WTP site, the DBE is defined by horizontal and vertical acceleration response spectra; **refer to section 2 of the MR for the attached In-Structure Acceleration Response Spectra.**

Important to Safety (ITS): Systems, structures, and components (SSCs) that serve to provide reasonable assurance that the facility can be operated without undue risk to the health and safety of the workers and the public. ITS encompasses the broad class of facility features addressed (not necessarily explicitly) in the top-level radiological, nuclear, and process safety standards and principles that contribute to the safe operation and protection of workers and the public during all phases and aspects of facility operations (i.e., normal operation as well as accident mitigation). ITS includes SSCs designated as Safety Design Class (SDC) / **Safety Class (SC)**, Safety Design Significant (SDS) / **Safety Significant (SS)**, and Risk Reduction Class (RRC) / **Additional Protection Class (APC)**.

MDS: Refers to the mechanical data sheet for the Vessel Vent Caustic Scrubber, Buyer document number 24590-PTF-MKD-PVP-00002.

MR: Refers to the material requisition for the Vessel Vent Caustic Scrubber, Buyer document number 24590-QL-MRA-MKAS-00002.

R5: Radiation classification for areas considered to be high or very high radiation areas.

Scrubber: Refers to the PTF Vessel Vent Caustic Scrubber, plant item number 24590-PTF-MK-PVP-SCB-00002.

1.5 Safety/Quality Classifications

Refer to the MDS for the quality level and seismic category designations of the Scrubber.

2 Applicable Documents

2.1 General

2.1.1 Work shall be done in accordance with the referenced codes, standards, and documents listed below, which are an integral part of this specification.

2.1.2 When specific chapters, sections, parts, or paragraphs are listed following a code, industry standard, or reference document, only those chapters, sections, parts, or paragraphs of the document are applicable and shall be applied. If a date or revision is not listed in section 2, the latest issue, including addenda, at the time of Request for Quote shall apply. The dates and revisions listed in section 2 shall apply to subsequent references to codes and standards within this specification. When more than one code, standard, or referenced document covers the same topic, the requirements for all must be met with the most stringent governing.

2.2 Codes and Standards

2.2.1 ASME Boiler and Pressure Vessel Code, Section VIII, Division 1, *Rules for Construction of Pressure Vessels.*

2.2.2 ASME AG-1-1997 Article AA, *Code on Nuclear Air and Gas Treatment.*

2.2.3 ASME-NQA-1-1989, *Quality Assurance Program Requirements for Nuclear Facilities.*

2.2.4 10 CFR 835, *Occupational Radiation Protection.*

2.2.5 **ANSI/AISC N690-1994*** ***Specification for the Design, Fabrication, and Erection of Steel Safety-Related Structures for Nuclear Facilities.***
*** This standard is tailored in Appendix C of the SRD (2.3.22). Engineering Specification is in accordance with the tailoring in Appendix C.**

2.3 Reference Documents/Drawings

2.3.1 24590-PTF-MKD-PVP-00002, *Mechanical Data Sheet for the Vessel Vent Caustic Scrubber.*

2.3.2 24590-WTP-3PS-G000-T0001, *General Specification for Supplier Quality Assurance Program Requirements.*

2.3.3 24590-WTP-3PS-G000-T0002, **Engineering** *Specification for Positive Material Identification* ***(PMI) for Shop Fabrication.***

2.3.4 24590-WTP-3PS-G000-T0003, ***Engineering*** *Specification for Packaging, Handling and Storage Requirements.*

2.3.5 24590-WTP-3PS-MV00-T0001, *Engineering Specification for Pressure Vessel Design and Fabrication.*

2.3.6 24590-WTP-3PS-MV00-T0002, *Engineering Specification for Seismic Qualification Criteria for Pressure Vessels.*

2.3.7 24590-WTP-3PS-MVB2-T0001, *Specification for Welding of Pressure Vessels, Heat Exchangers and Boilers.*

2.3.8 24590-WTP-3PS-SS00-T0002, *Specification for Welding of Structural Stainless Steel and Welding of Structural Carbon Steel to Structural Stainless Steel.*

2.3.9 24590-WTP-MV-M59T-00001, *Pressure Vessel Tolerances Standard Details.*

2.3.10 24590-WTP-MV-M59T-00007, *Thermowell Connection Standard Details.*

2.3.11 24590-WTP-MV-M59T-00009, *Lifting Lugs Standard Details.*

2.3.12 24590-WTP-MV-M59T-00010, *Tailing Lug Standard Details.*

2.3.13 24590-WTP-MV-M59T-00012, *Grounding Lug Standard Details.*

2.3.14 24590-WTP-MV-M59T-00016001, *Vessel Connections Standard Details Sheet 1 of 3.*

2.3.15 24590-WTP-MV-M59T-00016002, *Vessel Connections Standard Details Sheet 2 of 3.*

2.3.16 **Deleted**

2.3.17 24590-WTP-MV-M59T-00018, *Vessel Name Plate Standard Details.*

2.3.18 24590-WTP-PW-P30T-00001, *WTP End Prep Detail for Field Butt Welds.*

2.3.19 24590-WTP-3PS-SS90-T0001, Engineering Specification for Seismic Qualification of Seismic Category I/ II Equipment and tanks.

2.3.20 24590-WTP-DC-ST-01-001, Structural Design Criteria.

2.3.21 24590-WTP-DC-ST-04-001, Seismic Analysis and Design Criteria.

2.3.22 24590-WTP-SRD-ESH-01-001-02, Safety Requirements Document, Volume II
2.3.23* 24590-WTP-3PS-MV00-T0003, *Engineering Specification for Pressure Vessel Fatigue Analysis.

3 Design Requirements

3.1 General

3.1.1 As Low As Reasonably Achievable (ALARA) principles shall be applied to the design of the Scrubber per 10 CFR 835, *Occupational Radiation Protection.*

3.1.2 Seller shall design the Scrubber to the requirements of

- this specification
- applicable codes, standards and documents in section 2 of this specification
- Buyer document # 24590-WTP-3PS-MV00-T0001, *Engineering Specification for Pressure Vessel Design and Fabrication*
- ASME AG-1-1997 Article AA-4000, *Code on Nuclear Air and Gas Treatment*
- the MDS (mechanical data sheet # 24590-PTF-MKD-PVP-00002)
- the MR (material requisition # 24590-QL-MRA-MKAS-00002)

3.1.3 The Scrubber, including the packed section and dry packing section, shall be designed to operate continuously for a minimum service life of 40 years without access for maintenance. Seller shall provide documentation, including but not limited to calculations and analyses, to support their design and performance of the equipment.

3.1.4 Seller shall provide a written performance guarantee for the Scrubber which shall include, but shall not be limited to, process and design calculations.

3.1.5 The main components of the Scrubber shall include, but shall not be limited to, the following:

- A ring beam for vessel support
- A vertical cylindrical scrubber sump vessel with a vessel skirt and associated nozzles
- A cylindrical column above the scrubber sump vessel. The column consists of the following:
  - A packed section (which may have one or more packed beds) filled with Raschig Rings, Intalox Saddles, or other similar packing, random or structured, for offgas scrubbing
  - A distribution system for the scrubbing solution above the packed section **(irrigation and recirculation)**
  - A dry packing section above the packed section for the removal of fine mists
  - Wash system for the dry packing and the packed section
  - Associated nozzles

- **Lateral Restraint**

3.1.6 **Deleted**

3.1.7 Seller shall identify all interfaces and requirements for external connections supplied by the Buyer. The type and location of interfaces shall be reviewed and approved by the Buyer prior to fabrication.

3.1.8 Seller shall design the Scrubber and its internals, particularly the packed sections, to meet the requirements of testing, packaging, shipping (in the vertical and horizontal positions), handling, storage, installation, and operation of the Scrubber.

3.1.9 Corrosion allowance is specified in the MDS and shall be applied to all surfaces exposed to process vapor or liquid.

3.1.10 Deleted.

3.1.11 Seller shall provide a report containing equipment reliability figures for all major components and sub-components of the Scrubber. The report shall be submitted to the Buyer for review per Form G-321-E of the MR. The reliability figures shall include, as a minimum, the following:

- Failure rate, or mean time between failure (whichever is available).
- Estimated modes of failure (example, vessel failure, packing failure, nozzle failure, etc.). This may be delineated in a Failure Mode and Effect Analysis (FMEA). The method used to perform the FMEA (example, MIL-STD-1629) and the year shall be specified. All assumptions used to perform the FMEA shall be clearly stated.
- Recommended maintenance and frequency, as applicable.
- Estimated time to perform the recommended maintenance, as applicable.

The data above shall be based on the physical and environmental conditions delineated in this specification. Where possible, the Seller shall compare the figures for the equipment in this specification to similar equipment sold and serviced by the Seller. The source for all estimates and any underlying assumptions shall be stated. If software is used to perform the FMEA, the Seller shall specify the software and the version used (example software, Relex, Isogen, Reliasoft, etc.).

3.2 Basic Description

The Scrubber treats the combined vent offgas collected from process vessels located in the PTF primarily to absorb Nitrogen Oxides (NO_X) gases and other acidic gases and removes large particulates from the feed gases.

The vent offgas flows up through the packed section of the Scrubber. The packed section shall be filled with either Raschig Rings, Intalox Saddles, or other similar random or structured packing, to provide efficient contact between the vent offgas and the alkaline scrubbing solution flowing down through the packed section. Part of the NO_X gases and other acidic gases, i.e. carbon dioxide, present in the vent offgas react with the alkaline scrubbing solution to form sodium salts. The scrubbing solution is collected in the scrubber sump vessel below the packed section. The pH level of the scrubbing solution shall be monitored and maintained within the operating pH limits by intermittent addition of fresh 5 molar caustic solution to the scrubber sump vessel.

The Scrubber shall remove some radioactive aerosols and reduce the radioactive particulate loading on the vessel vent High Efficiency Mist Eliminators (HEMEs) located downstream of the Scrubber. The Scrubber must achieve a decontamination factor (DF) of at least 1.8 for the removal of NO_X gases and a DF of at least 3.5 for the removal of large particulates for particulate sizes of 2 μm and larger.

The scrubber sump vessel batch volume **shall be based on the sump vessel dimensions specified in the MDS and the** total **addition of** caustic, the maximum condensate collected from contacting with the scrubber inlet offgases, and the runback volume of scrubbing solution in the event of stoppage of the vessel vent scrubber recirculation pumps. **Total number of transfers per day, corresponding volume, and operating time shall be determined by Seller.**

The vessel vent scrubber recirculation pumps, PVP-PMP-00001A/B (one operating, one standby), shall supply part of the scrubbing solution to the top of the packed section. The rest **of the scrubber solution is** recirculated back to the scrubber sump vessel to provide adequate mixing.

A heat exchanger designed and provided by the Buyer will maintain the temperature of the solution recirculated to the packed section at 70 degrees F. The Buyer will provide the pumps per the Seller**'s confirmation of** scrubbing solution flow rates and supply pressure **specified on the MDS**.

Demineralized water shall be added intermittently to the Scrubber, via the wash system, either to clean and reduce the operating pressure drop across the packings, or to supply makeup requirements for maintaining liquid level in the scrubber sump vessel.

The vessel vent scrubber recirculation pumps also transfer scrubbing solution to the receipt vessel, PWD-VSL-00044. This is currently planned once a day (or upon a high level condition in the scrubber sump vessel) to maintain the liquid level of the scrubber sump vessel within the operating limits. An overflow line shall be provided to accommodate overflow of the scrubber sump vessel to the plant overflow vessel, PWD-VSL-00033.

Paragraph deleted.

Outlet offgases from the Scrubber flow to the vessel vent HEMEs. The Scrubber is located upstream of the HEMEs to saturate the offgas, thus avoiding any damage to the HEME elements from dry operation. The Scrubber shall provide for the removal of condensate and cool the offgas stream during the upset event of loss of chilled water supply.

3.3 Performance

3.3.1 Refer to the MDS for performance requirements and amount of NO_2 (Nitrogen Dioxide), NO (Nitric Oxide) and CO_2 (Carbon Dioxide) in the offgas inlet. Seller shall update the MDS per Form G-321-E of the MR with the required information for review by the Buyer.

3.3.2 Seller shall recommend additional operating parameters that must be monitored for the Scrubber to achieve the required performance.

3.3.3 Seller shall provide the optimum operating pH range for the scrubbing solution to achieve the required performance.

3.3.4 Seller shall provide the optimum operating and maximum rates of recirculation and delivery pressures of scrubbing solution for scrubbing and mixing purposes.

3.3.5 The Scrubber shall achieve a minimum DF of 1.8 for the removal of NO_X.

3.3.6 The Scrubber shall achieve a minimum DF of 3.5 for the removal of large particulates for particulate sizes of 2 μm and larger. Seller shall provide the DF for particle sizes of 1 μm and above as well as the DF for particle sizes of 0.5 μm and above.

3.3.7 Seller shall provide detailed operating instructions, in the form of a manual or similar, describing how to operate the Scrubber for all conditions (startup, normal, abnormal, shutdown) to achieve the required performance.

3.3.8 Seller shall provide the required flow rates and supply pressures of the demineralized water for wet packing and dry packing flushing.

3.3.9 **Refer to the MDS for the maximum** allowable pressure drop across the Scrubber,

3.4 Scrubber Design and Standard Details

3.4.1 Refer to the MDS for the dimensional constraints and design conditions of the Scrubber. Seller shall provide the outline dimensions, dry weight, test weight, and operating weight for the Scrubber in the form of a drawing or similar per Form G-321-E of the MR.

3.4.2 Ring beam design and fabrication shall comply with the ring beam detail in the MDS.

3.4.3 Nozzle design shall be in accordance with section 3.6 of Buyer document # 24590-WTP-3PS-MV00-T0001, *Engineering Specification for Pressure Vessel Design and Fabrication.*

3.4.4 Nozzle loading and reinforcement requirements shall be in accordance with sections 3.7 and 3.8 of Buyer document # 24590-WTP-3PS-MV00-T0001, *Engineering Specification for Pressure Vessel Design and Fabrication.*

3.4.5 Lifting lug design shall be in accordance with Buyer document # 24590-WTP-MV-M59T-00009, *Lifting Lugs Standard Details.*

3.4.6 Tailing lug design shall be in accordance with Buyer document # 24590-WTP-MV-M59T-00010, *Tailing Lug Standard Details.*

3.4.7 Grounding lug design shall be in accordance with Buyer document # 24590-WTP-MV-M59T-00012, *Grounding Lug Standard Details.*

3.4.8 **Deleted**

3.4.9 Seller shall provide a nameplate for the Scrubber in accordance with Buyer document # 24590-WTP-MV-M59T-00018, *Vessel Name Plate Standard Details.* General note 6 of 24590-WTP-MV-M59T-00018 does not apply.

3.4.10 Match mark the ring beam and the vessel skirt, using a line of welding bead, relative to north orientation after best fit.

3.5 Environmental Conditions

3.5.1 The Scrubber shall be stored outdoors prior to installation at ambient temperature ranging from –23°F to 113°F with relative humidity ranging from 5% to 100%.

3.5.2 The Scrubber will be located in room number P-0104, a Black Cell (R5·C5), at 0'-0" elevation of the pretreatment facility. The room will be maintained between 59°F dry bulb and 113°F dry bulb with **an average** relative humidity **of 10.7%**. The pressure in the room is between -1.0"WG and -1.4 "WG. Radiation dose rate is expected to be 100,000 mRad/hr.

3.5.3 Environment Qualification is not applicable to the PTF Vessel Vent Caustic Scrubber. The scrubber and scrubber internals are constructed from metal.

3.6 Loading

3.6.1 Seller shall design the Scrubber to be capable of handling the loads and stresses imposed on the Scrubber during testing, packaging, shipping (in the vertical and horizontal positions), handling, storage, installation, operation, and a Design Basis Earthquake (DBE).

3.6.2 Seller shall perform seismic analysis per the requirements of Buyer document # 24590-WTP-3PS-MV00-T0002, Engineering Specification for Seismic Qualification Criteria for Pressure Vessels and 24590-WTP-3PS-SS90-T0001, Engineering Specification for Seismic Qualification of Seismic Category I/II Equipment and Tanks. Refer to Section 2 of the MR for the attached In-Structure Acceleration Response Spectra.

3.6.3 Seller shall provide the dead weight, operating weight, and center of gravity for the column section, sump vessel, and the entire Scrubber per Form G-321-E of the MR.

3.6.4 Seller shall provide the base reaction (with seismic load combinations) of the Scrubber per Form G-321-E of the MR.

3.7 Instrumentation and Control Requirements

3.7.1 Seller shall recommend instrumentation and controls required for the Scrubber to achieve its required performance.

3.7.2 Seller shall provide functional test set points and recommended operating set points for the Scrubber.

3.7.3 Seller shall design, fabricate and install the necessary components for Buyer supplied and installed instrumentation. The components include, but are not limited to, thermowells, dip legs, dip pipes, and nozzles.

3.7.4 Thermowell design shall be in accordance with Buyer document # 24590-WTP-MV-M59T-00007, *Thermowell Connection Standard Details*.

3.7.5 Scrubber connection design shall be in accordance with Buyer document numbers 24590-WTP-MV-M59T-00016001, *Vessel Connections Standard Details Sheet 1 of 3*, and 24590-WTP-MV-M59T-00016002, *Vessel Connections Standard Details Sheet 2 of 3*.

3.8 Accessibility and Maintenance

3.8.1 The Scrubber will not be accessible for maintenance once it is put in operational service. Seller shall consider and recommend all necessary features to ensure the Scrubber does not fail for a minimum service life of 40 years.

3.8.2 Seller shall design and install a wash system to clean the dry packing and packed section as and when required. Seller shall recommend the frequency and period of cleaning as preventive maintenance for the given duty conditions. The wash system will be supplied with demineralized water.

3.9 Lateral Restraint for scrubber at elevation 41'-6"

3.9.1 The Buyer will provide embeds at 41'-6" elevation to support the use of a lateral restraint to reduce the bending moments in the upper column, to lower vessel junction and to reduce moments at the base. The seller shall design, fabricate, and inspect the lateral restraint.

3.9.2 The lateral restraint shall be designed in accordance with 24590-WTP-DC-ST-01-001, Structural Design Criteria and 24590-WTP-DC-ST-04-001, Seismic Analysis and Design Criteria.

3.9.3 This specification section takes precedence over section 1.3, "Analysis and design of equipment/ tank supports to be furnished by the Buyer", 24590-WTP-3PS-SS90-T0001, Seismic Qualification of Seismic Category I / II Equipment and Tanks.

3.9.4 The seller shall provide a calculation for the lateral restraint including: loads on the embed plate, size of field weld at the embed plate, and sizing of the lateral restraint support members.

3.9.5 The lateral restraint design shall take in to account the Relative Displacement values specified in attachment 5 of the Material Requisition.

3.9.6 The lateral restraint design shall include field trim or adjustability to account for the vessel elevation and wall construction tolerances.
- **Vessel construction elevation tolerance is; plus 0 inches, minus 1/4 inches**
- **Vessel location with respect to the black cell walls is; plus or minus 1 inch**

Seismic Anchor Motion (SAM)

3.9.7 Provide the following information in the seismic report for the Vessel Vent Caustic Scrubber:
- **For nozzles which are currently modeled in the finite element model the x, y and z displacements at the nozzle / shell / head intersection. The coordinates x, y and z are to be aligned with or referenced to the plant coordinate system identified on your fabrication drawings.**
- **For nozzles not currently modeled in the finite element model the same information is required as above.**
- **Stiffness coefficients for each nozzle currently modeled in the finite element model. Stiffness coefficients shall be reported as follows:**
  - **<u>Cylindrical shell mounted nozzles</u>**
    - **In plane shall be presented as longitudinal plane**
    - **Out plane shall be represented as circumferential plane**
    - **Torsional**
  - **<u>Spherical shell (head) mounted nozzles</u>**
    - **In plane shall be presented as meridional plane**
    - **Out plane shall be presented as latitudinal plane**

- **Torsional**

4 Materials

4.1 General

4.1.1 All materials of construction for the Scrubber shall conform to the requirements of:
- this specification
- Buyer document # 24590-WTP-3PS-MV00-T0001, *Engineering Specification for Pressure Vessel Design and Fabrication*
- Buyer document # 24590-WTP-3PS-G000-T0002, *Specification for Positive Material Identification*
- the MDS
- the MR
- ASME AG-1-1997 Article AA-3000, *Code on Nuclear Air and Gas Treatment*

4.1.2 Seller shall provide Material Safety Data Sheets (MSDSs) for all applicable materials used in the construction of the Scrubber.

4.1.3 All materials used in the construction of the Scrubber shall be resistant to the radiation dose rate indicated in section 3.5 of this specification.

4.1.4 The lateral restraint shall be stainless steel in accordance with section 7.1.2, 24590-WTP-DC-ST-01-001, Structural Design Criteria.

4.2 Prohibited Materials

4.2.1 Mercury and other low melting point metals, their alloys, or materials containing such metals as their basic constituents shall not be used in the construction of the Scrubber.

4.2.2 Sulfides and halides shall not be used in direct contact with stainless steel.

4.2.3 Asbestos shall not be included in any component of the Scrubber.

4.2.4 Carbon steel shall not be included in any component in contact with fluid and the vessel.

4.2.5 Halide containing materials shall not be used in any component of the Scrubber.

5 Fabrication

5.1 General

5.1.1 Fabrication of the Scrubber shall conform to the requirements of:
- this specification

- Buyer document # 24590-WTP-3PS-MV00-T0001, *Engineering Specification for Pressure Vessel Design and Fabrication*
- the MR
- ASME AG-1-1997 Article AA-6000, *Code on Nuclear Air and Gas Treatment*

5.1.2 Fabrication tolerances shall conform to the requirements of ASME Boiler and Pressure Vessel Code, Section VIII, Division 1, *Rules for Construction of Pressure Vessels*, and Buyer document # 24590-WTP-MV-M59T-00001, *Pressure Vessel Tolerances Standard Details*.

5.1.3 End preparations of field butt welds shall be in accordance with Buyer document # 24590-WTP-PW-P30T-00001, *WTP End Prep Detail for Field Butt Welds.*

5.2 Welding

5.2.1 Welding of the Scrubber shall conform to the requirements of the documents listed in section 5.1.1 of this specification and Buyer document # 24590-WTP-3PS-MVB2-T0001, *Specification for Welding of Pressure Vessels, Heat Exchangers and Boilers.*

5.2.2 Welding of structural steel shall conform to the requirements of Buyer document # 24590-WTP-3PS-SS00-T0002, *Specification for Welding of Structural Stainless Steel and Welding of Structural Carbon Steel to Structural Stainless Steel.*

6 Tests and Inspections

6.1 General

6.1.1 Seller shall conduct and be responsible for all testing and inspections of the Scrubber per the requirements of:

- this specification
- ASME Boiler and Pressure Vessel Code, Section VIII, Division 1, *Rules for Construction of Pressure Vessels*
- Buyer document # 24590-WTP-3PS-MV00-T0001, *Engineering Specification for Pressure Vessel Design and Fabrication*
- the MR
- ASME AG-1-1997 Article AA-5000, *Code on Nuclear Air and Gas Treatment*

6.1.2 Nondestructive Examination requirements shall be in accordance with sections 6.1, 6.2, and 7.2 of Buyer document # 24590-WTP-3PS-MV00-T0001, *Engineering Specification for Pressure Vessel Design and Fabrication.*

6.1.3 Seller shall develop and submit detailed test and inspection procedures for conducting all testing and inspections required per this specification, applicable codes, standards, and reference documents for review by the Buyer prior to fabrication of the Scrubber.

6.1.4 Seller shall complete and submit reports of all testing and inspections. Reports shall identify the component tested or inspected, date performed, applicable procedures,

acceptance criteria, person performing the test or inspection, results, and conclusions. Drawings of test setups shall be included. All testing and inspection results shall be certified.

6.1.5 Control and calibration of measuring and test equipment shall be in accordance with ASME AG-1-1997 Article AA-5130, *Code on Nuclear Air and Gas Treatment.*

6.1.6 Nondestructive Examination for the ring beam shall meet the additional requirements of ANSI/AISC N690, section 11, 24590-WTP-3PS-SS00-T0002, Welding of Structural Stainless Steel and Welding of Structural Carbon Steel to Structural Stainless Steel. All ring beam welds are considered critical welds. Section 11 is mandatory even if the web to flange weld NDE is not indicated on a drawing.

6.1.7 Nondestructive Examination for the lateral restraint shall meet the additional requirements of ANSI/AISC N690, section 11, 24590-WTP-3PS-SS00-T0002, Welding of Structural Stainless Steel and Welding of Structural Carbon Steel to Structural Stainless Steel.

7 Preparation for Shipment

7.1 General

7.1.1 The Scrubber shall be prepared for shipment in accordance with:

- Buyer document # 24590-WTP-3PS-MV00-T0001, *Engineering Specification for Pressure Vessel Design and Fabrication*
- Buyer document # 24590-WTP-3PS-G000-T0003, *General Specification for Packaging, Shipping, Handling and Storage Requirements*
- ASME AG-1-1997 Article AA-7000, *Code on Nuclear Air and Gas Treatment*

7.1.2 All results of shop tests and inspections for the Scrubber shall be reviewed by the Buyer prior to preparing and packaging it for shipment.

7.1.3 Seller shall verify, by calculation, that the Scrubber and its internals will withstand loads occurring during shipping, handling and installation.

7.2 Tagging

7.2.1 All packages shall be clearly and suitably tagged to at least show the Seller's name, Buyer's name, plant item number, purchase order number, package contents, parts list (for each package), and handling instructions.

7.2.2 The Scrubber shall be identified using a nameplate as specified in section 3.4.9 of this specification.

7.3 Shipping, Handling and Storage Instructions

Seller shall submit shipping weights as well as detailed shipping, handling, and storage instructions for the Scrubber prior to its shipment per Form G-321-E of the MR.

8 Quality Assurance

8.1 General Requirements

8.1.1 Seller's Quality Assurance Program (QAP) requirements are specified in Buyer document # 24590-WTP-3PS-G000-T0001, *General Specification for Supplier Quality Assurance Program Requirements.*

8.1.2 Seller's QAP manual shall be submitted to the Buyer for review in accordance with Buyer document # 24590-WTP-3PS-G000-T0001, *General Specification for Supplier Quality Assurance Program Requirements.*

8.1.3 Seller's QAP, as a minimum, shall contain the requirements detailed in the Supplier Quality Assurance Program Requirements data sheet listed in section 2 of the MR.

8.2 Quality Related Components

8.2.1 Seller shall have in place a QAP meeting the requirements of ASME-NQA-1-1989, marked as applicable in Supplier Quality Assurance Program Requirements Data Sheet attached to the MR, and Buyer document # 24590-WTP-3PS-G000-T0001, *General Specification for Supplier Quality Assurance Program Requirements.*

8.2.2 The successful bidder must pass a pre-award survey by the Buyer. Seller shall demonstrate that its quality program is in compliance with the procurement quality requirements listed in the Supplier Quality Assurance Program Requirements Data Sheet. Seller shall allow the Buyer, its agents, and DOE access to their facility and records pertaining to this purchase order for the purpose of QA audits and surveillance at mutually agreed times.

8.2.3 All items shall be manufactured in accordance with Seller's QAP that meets the requirements of ASME NQA-1-1989, and has been previously evaluated and accepted by the WTP Quality Assurance Organization.

8.2.4 Seller shall submit their QAP and work plan to the Buyer for review prior to commencement of work. The plan shall include documents and procedures to implement the work and include a matrix of essential QA elements cross referenced with the documents or procedures.

9 Configuration Management

9.1 The equipment covered by this specification is identified with the plant item number shown in the MDS. The equipment shall be identified in accordance with section 7.2, Tagging, of this specification.

9.2 Substitutions and deviations shall be in accordance with section 2.6 of the MR.

10 Documentation and Submittals

10.1 General

10.1.1 Seller shall submit to Buyer all detailed designs, documentation, procedures, instructions, calculations, analyses, manufacturer data, inspection reports, test reports, certifications, certificates, manuals, MSDSs, and drawings required per this specification, its addenda and attachments, the MR, and referenced codes, standards and Buyer documents.

10.1.2 Seller shall submit to Buyer the Engineering and Quality Verification documents in the forms, quantities, and timing shown in Form G-321-E, *Engineering Document Requirements*, and Form G-321-V, *Quality Verification Document Requirements*, in section 3 of the MR.

10.1.3 Section 2.6 of the MR applies for substitutions and deviations.

10.1.4 Each documentation transmittal package shall have a documentation inventory sheet attached listing all documents and the number of pages in each.

10.1.5 The seller shall submit to the buyer all detail designs, documentation, calculations, analysis, inspection reports, test reports, certifications, certificates, and shop detail drawings for the lateral restraint.

10.2 Calculations

All calculations to be provided to the Buyer shall be orderly, complete, and sufficiently clear to permit verification. The body of the calculations shall include:

- a concise statement of the purpose of the calculation
- input data, applicable criteria, and stated assumptions
- a list of references used, including drawings, codes, standards, and computer programs (indicate the version or issue date)
- a discussion of rationale used for design assumption basis
- equations used for all computations
- numerical calculations including identification of units used
- a concise statement addressing the calculation results and/or recommendations
- a table of contents for complex calculations

10.3 Schedules

10.3.1 A detailed schedule of engineering, document submittals, material purchases, fabrication, shop tests, and shipment shall be submitted using Form 15EX in section 3 of the MR.

10.3.2 Deleted

R10157214

RIVER PROTECTION PROJECT – WASTE TREATMENT PLANT

ENGINEERING SPECIFICATION

FOR

Ultrafilters

ISSUED BY
RPP-WTP PDC
DAS 11/13/03
INIT DATE

MARK W. HOFFMANN
STATE OF WASHINGTON
0030952
REGISTERED
PROFESSIONAL ENGINEER
11/13/03
EXPIRES 12/10/04

This bound document contains a total of 22 pages

Content applicable to ALARA? ☐ **Yes** ☐ **No**

ADR No. **Rev**

Quality Designator
QL
DOE Contract No. DE-AC27-01RV14136

NOTE: Contents of this document are Dangerous Waste Permit affecting.

REV	DATE	REASON FOR REVISION	BY	CHECK	REVIEW	QA	APEM/DEM
1	11/13/03	Issued for Permitting Use	J. Hickman	G. Butt	N/A	N/A	M.Hoffmann
0	10/4//02	Issued for Permitting Use	J.Jackson	C.Morley	N/A	N/A	M.Hoffmann

SPECIFICATION No. 24590-PTF-3PS-MLFP-TP001 **Rev** 1

11/13/03
☒ Processed Data Entry ☐ Copied QA ☒ Scanned ☐ Filed
11/13/03 ME

Note: Please note that source, special nuclear and byproduct materials, as defined in the Atomic Energy Act of 1954 (AEA), are regulated at the U.S. Department of Energy (DOE) facilities exclusively by DOE acting pursuant to its AEA authority. DOE asserts, that pursuant to the AEA, it has sole ad exclusive responsibility and authority to regulate source, special nuclear, and byproduct materials at DOE-owned nuclear facilities. Information contained herein on radionuclides of provided for process description purposes only.

Contents

1 Scope 1
1.1 Project Description and Location 1
1.2 Equipment, Material, and Services Required 1
1.3 Work by Others 1
1.4 Acronyms and Definitions 2
1.5 Safety/Quality/Seismic Classifications 3
2 Applicable Documents 3
2.3 Codes 3
2.4 Related Documents and Drawings 3
3 Design Requirements 4
3.1 General Requirements 4
3.2 Technical Requirements 5
3.3 Environmental Conditions 7
3.4 Lifting Requirements 7
3.5 Seismic Analysis 7
4 Materials 8
5 Fabrication 8
5.1 General 8
5.2 Welding 8
6 Special Tools 8
7 Inspection and Examination 9
8 Testing 10
8.1 General 10
8.2 Pneumatic Testing 10
8.3 Tube Testing 10
9 Cleaning and Painting 10
10 Marking 11
11 Instruction Manuals and Drawings 11
12 Quality Assurance 11
13 Compliance Matrix 12
14 Preparation for Delivery 12
15 Seller Documentation Submittals 12

15.1 General 12
15.2 Calculations 13
15.3 As-Built Drawings 13
15.4 Project Start 14
15.5 30 % Design Review 14
15.6 60 % Design Review 14
15.7 90 % Design Review 14
15.8 Final Design Review 17

Figures

Figure 1 Ultrafilter Schematic 18

1 Scope

1.1 Project Description and Location

The River Protection Project-Waste Treatment Plant (RPP-WTP) is a complex of waste treatment facilities where the US Department of Energy (DOE) Hanford Site tank waste will be pretreated and immobilized into stable glass form via vitrification. The WTP Contractor will design, build, and start-up the RPP-WTP pretreatment and vitrification facilities for the DOE Office of River Protection (ORP). The waste treatment facilities will pretreat and immobilize the low-activity waste (LAW) and high-level waste (HLW) currently stored in underground storage tanks at the Hanford Site.

The Hanford Site occupies an area of about 560 square miles and is located along the Columbia River, north of Richland, WA in the U.S.A. The RPP-WTP Facility will be constructed at the east end of the 200 East Area of the Hanford Site. The counties of Benton, Franklin, and Grant surround the Hanford Site.

1.2 Equipment, Material, and Services Required

Crossflow Ultrafiltration will be employed in the pretreatment facility. These filters are similiar in design to heat exchangers of the single-pass shell-and-tube type. The Ultrafilters incorporate porous filter tubes whereby suspended solids are concentrated.

Three ultrafilter assemblies will be operating in series. The second and third assembly will have lower slurry feed rate and lower inlet pressures.

This specification provides the requirements for the design, configuration, analysis, fabrication, quality assurance, inspection, testing and delivery of Ultrafilters and special tools for use in the RPP-WTP facility. The scope of work for the Seller includes all work specifically defined in this specification. Work shall include but is not limited to the following:

1.2.1 Provide fully detailed designs, drawings, supporting calculations, supporting analyses, procedures, and all labor, materials, tooling, shop drawings and services necessary to manufacture, inspect, test, package and ship Ultrafilters.

1.2.2 Provide certified material test reports, welding procedures, welder qualifications, testing procedures, testing results, quality assurance procedures, quality assurance inspection results, and all other procedures and documentation required per this specification.

1.2.3 Design Reviews will be held between buyer and seller representatives at 30%, 60% and 90% design stages.

1.3 Work by Others

The Buyer shall supply the following:

1.3.1 Unloading and storage of all material at jobsite.

1.3.2 Installation labor, valves and controls, and all piping to and from the Ultrafilter assemblies.

1.3.3 Remotely removable structural support frames.

1.3.4 Remotely removable piping connectors and remote connecting nozzles.

1.3.5 Supply of backflush reservoirs.

1.4 Acronyms and Definitions

1.4.1 Acronyms

ANSI	American National Standards Institute
ASME	American Society of Mechanical Engineers
BBPt	Bubble Point
CCTV	Closed Circuit Television
CG	Center of Gravity
DOE	Department of Energy
HLW	High Level Waste
ID	Inside Diameter
LAW	Low Activity Waste
M	Molarity
MDS	Material Data Sheet
MT	Magnetic Particle Inspection
MTBF	Mean Time Between Failures
MR	Material Request
NaOH	Sodium Hydroxide
OD	Outside Diameter
O&M	Operating and Maintenance
ORP	Office of River Protection
PFD	Process Flow Diagram
PT	Liquid Penetrant
RFQ	Request for Quote
RPP	River Protection Project
SC	Seismic Category
SS	Stainless Steel
TBD	To Be Determined
WTP	Waste Treatment Plant

1.4.2 Definitions.

Hot Cell :One of the parts of the plant that is restricted from personnel. The hot cell is composed of concrete walls with an internal stainless steel liner. Process equipment located in the hot cell will be subjected to a radiation field, and must be designed with remote maintenance capabilities.

Seismic Category: Classification of vessels defining the required condition, status, and operating function after a seismic event. The seismic category states the analysis method and acceptance criteria appropriate for the intended service and safety function of the vessel. Refer to 24590-WTP-3PS-MV00-TP002, *Seismic Qualification Criteria for Pressure Vessels*, for further definitions and procedures. Buyer assigns category level.

Sr: Strontium

Targeting: Refers to aligning dowels with dowel holes to correctly position parts.

TRU: Transuranic.

1.5 Safety/Quality/Seismic Classifications

For conservatism, the ultrafilter shall be designed and fabricated to satisfy Seismic Category 1 and Quality Level 1 requirements.

2 Applicable Documents

2.1 Work shall be done in accordance with the referenced codes, standards, and documents listed below, which are an integral part of this specification.

2.2 When specific chapters, sections, parts, or paragraphs are listed following a code, industry standard, or reference document, only those chapters, sections, parts or paragraphs of the document are applicable and shall be applied. For codes and standards listed below, the specific revisions or effective dates identified, as well as the specific revisions or effective dates of codes and standards that they incorporate by reference (daughter codes and standards), shall apply. If a date or revision is not listed, the latest issue, including addenda, at the time of Request for Quote (RFQ) shall apply. When more than one code, standard, or referenced document covers the same topic, the requirements for all must be met with the most stringent governing.

2.3 Codes

ASME B&PV Section VIII with Addenda, *Pressure Vessels*

ASME B&PV Section IX with Addenda, *Welding and Brazing Qualifications*

ASME B&PV Section V with Addenda, *Nondestructive Examination*

ASME B&PV Section II with Addenda, *Materials*

ASME NQA-1-1989 Quality Assurance Program Requirements for Nuclear Facility Applications

2.4 Related Documents and Drawings

24590-WTP-3PS-G000-T0001, *Supplier Quality Assurance Program Requirements*

24590-WTP-3PS-G000-T0003, *Packaging, Shipping, Handling and Storage Requirements*

24590-WTP-3PS-MVB2-T0001, *Welding of Pressure Vessels, Heat Exchangers and Boilers*

24590-WTP-3PS-MV00-TP001, *Pressure Vessel Design and Fabrication*

24590-WTP-3PS-MV00-TP002, *Seismic Qualification Criteria for Pressure Vessels*

24590-WTP-3PS-SS90-T0001, *Seismic Qualification of Seismic Category I/II Equipment and Tanks*

24590-PTF-M5-V17T-P0010, *Process Flow Diagram Ultrafiltration System UFP*

24590-WTP-3PS-PX04-T0004, *Epoxy Coating of Stainless Steel Items That Are Buried, Embedded, or Insulated*

3 Design Requirements

3.1 General Requirements

3.1.1 Unless otherwise specified, the Ultrafilter assembly shall be designed and fabricated per applicable documents listed in paragraph 2.0. No changes, substitutions, or deviations may be made without prior written approval of the Buyer.

3.1.2 The Ultrafilter assembly unit shall be designed for use in a horizontal orientation, as shown in the Figure 1 schematic. The assembly shall be sloped to allow for draining.

3.1.3 Design of the Ultrafilter assembly shall incorporate the latest and best proven technology, components, and materials for the required service conditions and performance.

3.1.4 The Seller shall provide an MTBF analysis for operating life showing all assumptions and references.

3.1.5 The Ultrafilter assembly shall be able to have the permeate (area outside the tubes) drained readily. Pockets or voids that could entrain the process fluid shall not be allowed.

3.1.6 All porous tube passages shall be capable of being back-flushed.

3.1.7 The Seller shall specify the dry weight of the Ultrafilter assembly and any tooling furnished.

3.1.8 Ultrafilters will be operated by the Buyer in a hot cell and removed remotely utilizing an overhead crane and CCTV camera. The Ultrafilters shall be designed to be easily installed and removed from the hot cell. The Ultrafilter lifting yoke (Seller provided) shall be designed to interface with the hot cell maintenance tools (Buyer provided). Buyer will provide drawings for remote crane interface, remotely removable jumper piping interface and ultrafilter saddle mounting interface.

3.1.9 The Ultrafilter assembly shall be designed to retain structural integrity for a drop on its bottom (saddle side) exhibiting 2.1 g deceleration. Verification will be by analysis only.

3.1.10 All design drawings, fabrication drawings, and procedures shall be submitted for review prior to release of manufacturing. This includes outline and assembly drawings, component fabrication drawings, weld maps, fitup, and assembly procedures.

3.2 Technical Requirements

3.2.1 For process conditions refer to the *Mechanical Systems Data Sheet* 24590-PTF-MLD-UFP-P0007 in section 2 of the Material Requisition.

3.2.2 The Ultrafilter assembly shall be furnished to Buyer with 10 in. eccentric pipe stubs prepared for butt-welding at each end. The Buyer will attach remote connectors or process piping as necessary to each end of the 10 in. pipe. Three pipe stubs prepared for butt-welding shall be installed on the shell side. The Buyer will attach remote connectors as necessary. One 1 in. pipe stub is located on top of the filter for tube inlet pressure. The second pipe stub (4 in.) is also located on top and serves as permeate-outlet/backflush-inlet. The third pipe stub (1 in.) is located on the bottom at the low point of the shell, and is a permeate drain (volume outside of tubes).

3.2.3 Nozzle Loads: Refer to the *Nozzles and Manways* section of specification 24590-WTP-3PS-MV00-TP001, *Pressure Vessel Design and Fabrication.*

3.2.4 Porous Tube and Element Specifications

3.2.4.1 Porous tube herein applies to the part that is sintered in one piece. A filter element will be made up of a single piece if possible, with metal end connectors at each end. If multiple lengths are required in order to achieve the required length, the pieces shall be welded. Tube end connectors shall have the same ID as the tubes and shall be of the same material as the tubes. Length of the end connector shall be approximately 2 in. long. A tube bundle shall be comprised of filter elements that are welded into a bundle and inserted into a containment shell.

3.2.4.2 The metal powder used for the porous tubes shall be 316L SS.

3.2.4.3 The tube dimensions shall be as specified in the Seller's base proposal. Seller shall submit tolerances for these dimensions for review by Buyer prior to proceeding with fabrication.

3.2.4.4 The permeate-out/backflush-inlet nozzle shall be located at the high point of the ultrafilter to facilitate back pulse operations (no air volume is permitted).

3.2.4.5 Filter tubes that are made up of welded assemblies shall have a finished length of 96 in. The Seller shall submit tolerances for overall length of the element and its straightness.

3.2.4.6 The sintered tube bundle shall have a minimum usable surface area of 237 sq ft (252 sq ft nominal) a pore size of 0.1 micron (nominal), and a bubble point minimum of 7-9 in. Hg +/- 1 in. Hg.

3.2.5 Service Conditions

- Ultrafilter Design pressure/ temperature: 200 psig @ 200 F
- Normal system operating pressure/ temperature: 100 psig @ 77± 9 °F

During filtration (normal operating mode), the tubes have 100 psig inner pressure, and 50 psig outside pressure, for a resultant trans-membrane pressure of 50 psi. The trans-membrane pressure will fluctuate between 30 and 70 psi.

During backpulsing, the outside tube pressure will be 40 psig over the inside tube pressure or 100 psig plus 40 psig which results in a total outside tube pressure of 140 psig.

- Maximum backpulsing pressure: 180 psig
- Maximum slurry flow rate entering element bundle: 2400 gpm

3.2.6 Operating Functions

3.2.6.1 The Ultrafilter shall perform the following operating functions: separate, wash, or treat feed suspensions. The normal system operating temperature for these functions is 77 ±9 °F with an internal filter tube pressure of 100 psig. Before separating, the slurry solid content will range from 0.41 % insoluble solids to 8.11 % insoluble solids. After separating, the slurry solid content will range from 15 % insoluble solids to 25 % insoluble solids. Design slurry flow rate into the Ultrafilter assembly is 2200 gpm, maximum is 2400gpm with a linear tube velocity of 12-15 ft per sec. The process flow is shown in 24590-PTF-M5-V17T-P0010, *Process Flow Diagram Ultrafiltration System UFP.*

3.2.6.2 Paragraph Deleted.

3.2.6.3 Another operating function is the separation of solids from wash solutions. The wash is diluted caustic (0.01 M NaOH (sodium hydroxide) solution) or process condensate. The solids may be treated by adding 19 M sodium hydroxide to the feed vessel to make the liquid 3 M NaOH which has a normal operating temperature of 85°C. This solution will be filtered by the Ultrafilter.

3.2.6.4 During the filtration cycle the Ultrafilter tubes may come in contact with 2 M nitric acid, and/or 2 M caustic. In addition, the Ultrafilter will require cleaning by backpulsing (reverse flow) and backflowing. There are 3 mechanisms for cleaning. The first method requires backpulsing with process air at 140 psig. The second method is to wash the Ultrafilter loop and it involves backflowing with 2 M nitric acid at 40 psig over slurry pressure. The third method is to backflow with 2 M caustic at 40 psig over slurry pressure.

3.2.7 Design Standardization

The Ultrafilters shall be standardized to the fullest extent by detailed mechanical design and fabrication methods.

3.2.8 The Ultrafilter assembly shall meet or exceed a 10-year design life. The design basis shall be provided by the Seller.

3.2.9 Each ultrafilter assembly shall be designed to ASME Section VIII including "U" Stamping and board registration.

3.3 Environmental Conditions

The Ultrafilters shall be able to withstand the following environmental conditions inside the hot cell:

Temperature	59 to 113 °F
Relative Humidity	0 to 100 %
Radiation Exposure in Rads	Per hour - 5.5e02 R 5 years - 2.4e07 R

3.4 Lifting Requirements

3.4.1 Installation of the Ultrafilter assembly into the hot cell will be by a single crane operation and a rigid lifting yoke (Seller-furnished). The Ultrafilter assembly will be lifted using the lifting yoke. Handling procedures shall accompany the submittal data and be included in the Seller's instruction manual. "C G"(Center of Gravity) shall be marked on the lifting yoke.

3.4.2 The Seller shall provide 2 lifting points per Ultrafilter unit, as specified by the Buyer-furnished drawings, and that are compatible with the remote crane.

3.4.3 All lifting attachments shall have either a safety factor of 3, based on the material yield strength, or 5, based on the material ultimate strength, whichever is most conservative.

3.4.4 The lifting lugs and yoke shall be designed to permit lifting the Ultrafilter unit without distortion or damage to the components of the Ultrafilter assembly.

3.4.5 The Lifting lugs shall be designed to meet or exceed the requirements of 24590-WTP-3PS-G000-T0003, *Packaging, shipping, Handling, and Storage Requirements.*

3.5 Seismic Analysis

3.5.1 Ultrafilters shall be designed and fabricated to SC-1 and seismic analysis shall be performed per the requirements of specifications 24590-WTP-3PS-MV00-TP001, *Pressure Vessel Design and Fabrication;* 24590-WTP-3PS-SS90-T0001, S*eismic Qualification of Seismic Category I/II Equipment and Tanks;* and 24590-WTP-3PS-MV00-TP002, *Seismic Qualification Criteria for Pressure Vessels.*

3.5.2 The detail and extent of the criteria for acceptance are as follows: The contents of the Ultrafilter assembly are to be retained; no permanent deformation of body, supports, or mountings; and no attachment (pipework, nozzles, brackets) deformation that will prevent retrieval of the Ultrafilter assembly by the normal operating procedures for the event.

3.5.3 A vibration analysis shall be performed in addition to the seismic analysis to ensure the design is adequate when the seismic event is combined with the 2400 gallon per minute slurry flow.

3.5.4 A vibration and seismic analysis shall be performed under normal operating conditions to ensure the design is adequate.

4 Materials

Materials shall be furnished to the specifications and grades shown on 24590-PTF-MLD-UFP-P0007 Ultrafilter MDS, and as specified per 24590-WTP-3PS-MV00-TP001, *Pressure Vessel Design and Fabrication.*

5 Fabrication

The Seller shall obtain written Final Design Review from the Buyer prior to the start of fabrication activities.

5.1 General

5.1.1 Fabrication shall be as specified per 24590-WTP-3PS-MV00-TP001, *Pressure Vessel Design and Fabrication.*

5.1.2 Metallic material handling devices in contact with stainless steel shall be made of stainless steel. Surfaces resulting from the removal of temporary welded attachments shall be ground flush. It is acceptable to use high-strength carbon steel clamping devices such as machine chuck jaws on stainless steel, provided the Seller has a program or procedure for ensuring that the stainless steel has not been contaminated by the carbon steel. This procedure shall be available at the Seller's facility for the Buyer's review.

5.1.3 The Seller shall develop, and have reviewed by the Buyer, a fabrication, inspection, and examination plan. Inspections and examinations shall be documented and reviewed at random by the Buyer.

5.2 Welding

Welding of piping, pressure containing parts, and wetted parts (except structural items), as well as any weld repairs to such parts, shall be performed and inspected in accordance with ASME Section VIII Division 1, and specification 24590-WTP-3PS-MVB2-T0001, *Welding of Pressure Vessels, Heat Exchangers, and Boilers.* No surface preparation such as descaling, etc is required or applicable.

6 Special Tools

Each special tool shall be labeled with a drawing number and its intended use, with instructions in the manual on its use.

7 Inspection and Examination

7.1 Inspection and examination of the Ultrafilter shall be in accordance with ASME Section VIII and specification 24590-WTP-3PS-MV00-TP001 *Pressure Vessel Design and Fabrication.*

7.2 Liquid penetration examination shall be in accordance with the ASME Section V. All defects found shall be repaired and re-examined by the Seller. The Seller shall use an approved procedure for all liquid penetrant examination. This procedure shall be submitted to the Buyer for review prior to fabrication.

7.3 The welds between tube elements and tube sheets of the tube bundles shall be liquid penetrant tested at final assembly.

7.4 Seller shall perform onsite inspection at his place of fabrication for the following items:

7.4.1 First tube production

7.4.2 Bubble point testing (BBPt)

7.4.3 Gas flow testing

7.4.4 Tensile testing

7.4.5 First element production welding

7.4.6 First element bubble point testing

7.5 Surveillance inspection of the Ultrafilters during fabrication, assembly, and testing shall be performed by the Buyer as described in Section 5.1 of the MR.

7.6 All lifting yoke and lifting attachment welds shall be liquid penetrant (PT) or magnetic particle (MT) inspected in accordance with ASME Section V.

7.7 The Seller shall inspect all welds inside the filter elements including porous to solid connector welds using a borescope, closed circuit television camera and Cathode Ray Tube. The Seller shall also select and similarly inspect approximately 10 % of the elements. In addition, 1 % of the porous to porous welds shall be tensile tested to destruction.

7.8 Welds which are rejected must have the entire filter element discarded.

7.9 Records of the PT and MT and other tests shall be submitted to the Buyer as described in G-321-E included in document, 24590-QL-MRA-MVEF-00001.

8 Testing

8.1 General

8.1.1 The Seller shall submit the test procedures to the Buyer for review. Any deviations to the specified test requirements require Buyer review before the tests are started.

8.1.2 The Buyer reserves the right to witness all tests and shall be given a minimum of 72 hours written notice prior to each test date.

8.1.3 The lifting yoke shall be load tested to 1.5 times the design load.

8.2 Pneumatic Testing

8.2.1 Pneumatic testing shall be conducted with the Ultrafilter fully assembled with the filter bundle installed in the filter housing Dry, filtered and oil-free gas shall be used.

8.2.2 The Ultrafilter assembly shall be pneumatically tested in accordance with ASME Section VIII. The results shall be recorded, documented, and submitted to the Buyer for review.

8.3 Tube Testing

8.3.1 All tubes shall be bubble point tested (BBPt) and seller will submit BBPt data and the procedure for liquid filtration in 0.1 micron grade media in stainless steel to Buyer for review. In addition, the assembled element comprising 4 tubes and two end connectors shall be BBPt tested to assure that the joining and welding does not create holes larger than specified. The minimum BBPt is 7-9 inches Hg and the wetting fluid shall be isopropyl alcohol solution. 100 % of the tubes and filter elements shall be bubble tested.

8.3.2 The finished tubes shall be gas-flow tested for both performance and integrity. Seller shall submit procedures and data for review. 100 % of the tubes shall be gas-flow tested.

8.3.3 Tubes shall be tested for tensile strength at a rate of 1 % per batch sintered. Seller shall submit data on tensile strengths.

8.3.4 All powders used in the sintering shall be documented by lot for their chemical composition and powder fraction sizes and certified.

9 Cleaning and Painting

9.1 The Ultrafilter, including parts, shall be delivered to the Hanford Site clean and free of any oils, tape adhesives, weld splatter, dirt, loose debris, and other contaminants.

9.2 Solvents and cleaning solutions used on stainless steel shall be chloride free.

9.3 A 1 1/2 in. yellow band shall be painted around the top of dowel holes for targeting. The requirements for the epoxy coating, surface preparation, application, testing, and inspection

shall be per 24590-WTP-3PS-PX04-T0004, *Epoxy Coating of Stainless Steel Items That Are Buried, Embedded, or Insulated.*

9.4 Stainless steel components do not require painting except as needed for identification or for targeting.

9.5 The top 8 in. of lifting attachments shall be painted yellow.

10 Marking

10.1 The Ultrafilter shall have a manufacturer's name plate with information identified in ASME Section VIII. In addition to the information required by ASME, the name plate shall include the assembly weight (dry and wet), purchase order number, and plant item number.

10.2 All attached plates and their attachment hardware shall be of corrosion resistant metal with stamped or etched characters.

11 Instruction Manuals and Drawings

11.1 The Seller shall prepare and provide copies of operating and maintenance manuals (O&M), including: operating and maintenance instructions for all the equipment supplied; parts list; arrangement drawings; recommended spares; and preventive maintenance for 10 years of operation.

11.2 Instruction manuals shall be provided for container storage, installation, startup, and maintenance instructions for the Ultrafilter and all associated equipment.

11.3 Ultrafilter lifting requirements shall be provided in detail along with any special precautions related to either handling or operating the equipment furnished. The use of any special tooling provided shall be explained in detail. All drawings and procedures required for Ultrafilter installation and operation shall be included in the manual for quick reference.

11.4 Any assembly methods shall be demonstrated to the Buyer. These methods shall be explained in detail in the Seller's instruction manual and the process recorded on video for future training purposes.

11.5 All drawings shall be provided to the Buyer as specified in Section 15 of this specification.

12 Quality Assurance

12.1 QA requirements specific to item(s) or service

12.1.1 The Seller shall have in place a QA program meeting the requirements of ASME-NQA-1-1989, marked as applicable in Supplier Quality Assurance Program Requirements Data Sheet attached to the MR, and Buyer specification 24590-WTP-3PS-G000-T0001. The Seller shall submit its Quality Assurance Manual with its bid.

12.1.2 The successful bidder must pass a pre-award survey by the Buyer. Seller shall demonstrate that its quality program is in compliance with the procurement quality requirements listed in the Supplier Quality Assurance Program Requirements Data Sheet. The Seller shall allow the Buyer, its agent, and DOE access to their facility and records pertaining to this purchase order for the purpose of QA Audits and Surveillance at mutually agreed times.

12.1.3 All items shall be manufactured in accordance with the Seller's Quality Assurance Program that meets the requirements of ASME NQA-1-1989, and has been previously evaluated and accepted by the RPP-WTP Quality Assurance organization.

12.1.4 Seller shall submit their QA program and work plan to Buyer for review prior to commencement of work. The plan shall include documents and procedures to implement the work and include a matrix of essential Quality Assurance elements cross referenced with the documents/procedures.

13 Compliance Matrix

A compliance matrix shall be provided with the proposal indicating how each specification requirement will be met by the seller.

14 Preparation for Delivery

Preparation for delivery shall be in accordance with 24590-WTP-3PS-G000-T0003, *Specification for Packaging, Shipping, Handling, and Storage Requirements*.

15 Seller Documentation Submittals

15.1 General

15.1.1 Seller shall submit to Buyer all detailed designs, drawings, documentation, procedures, instructions, calculations, analyses, manufacturer documentation, manufacturer data, inspection reports, test reports, certifications, certificates, manuals, MSDSs, video tapes, and drawings required per the MR (see G-321-E &/or G-321-V), the applicable codes, standards, and reference documents in section 2 of this specification.

15.1.2 All detailed designs, drawings, assembly drawings, shop drawings, MDSs, supporting calculation, supporting analyses, and all other requirements in the 60 % design stage shall be issued to the Buyer for review prior to fabrication of Ultrafilters and equipment.

15.1.3 Seller shall submit to Buyer Engineering and Quality Verification documents in the forms and quantities shown in Form G-321-E, *Engineering Document Requirements*, and Form G-321-V, *Quality Verification Document Requirements* attached to the MR, section 3.

15.1.4 Seller shall submit a report identifying any deviations and/or conflicts per section 2 of the MR to the Buyer for review.

15.1.5 Each documentation transmittal package shall have a documentation inventory sheet attached listing all documents and the number of pages each.

15.1.6 All documents submitted for review (e.g., General Arrangement, Shop Details, Calculations must contain their own unique NAME AND IDENTIFICATION NUMBER) Example:

Calculations for Item:
Document No: Calc UFP-FLT-00001-0001

15.1.7 Data sheets in section 2 of the MR shall be marked up by the Seller and submitted to the Buyer for review with the detailed design.

15.1.8 All drawings shall be produced per the drawing practices set forth in ASME Y14.100, Engineering Drawing Practices.

15.2 Calculations

All calculations to be provided shall be orderly, complete, and sufficiently clear to permit verification. The body of the calculations shall include:

- A concise statement of the purpose of the calculation.
- Input data, applicable criteria, and stated assumptions.
- A list of references used, including drawings, codes, standards, and computer programs (indicate the version or issue date).
- A discussion of rationale used for design assumption basis.
- Equations used for all computations.
- Numerical calculation including identification of units used.
- A concise statement addressing the calculation results and/or recommendations.
- A table of contents for complex calculations.

15.3 As-Built Drawings

15.3.1 Progress As-Builts

During construction, the Seller shall keep an updated marked-up set of progress as-built drawings on the jobsite as an accurate record of all deviations between the work, as shown on the Buyer reviewed drawings, and work as fabricated. These drawings shall be available to the Buyer for inspection at any time during regular business hours.

15.3.2 Final As-Builts

Seller shall furnish to Buyer final as-built drawings with AS-BUILT clearly printed on each sheet for all final work left in place. Seller shall accurately and neatly transfer all deviations from progress as-builts to final as-builts.

15.4 Project Start

Seller shall submit drawing index and detailed schedule of engineering document submittals, material purchases, fabrication, shop test, and ready for shipment. Include bar charts or critical path method diagrams, which detail the chronological sequence of activities.

15.5 30 % Design Review

15.5.1 Provide drawings with outline dimensions. Drawings shall show external envelope, including lugs, centerline(s), isometrics, and details related to mountings.

15.5.2 Provide preliminary dimension, location, and layout for components.

15.5.3 Identify all items of equipment to ensure lifting capability during construction, maintenance, and decommissioning.

15.6 60 % Design Review

15.6.1 Provide assembly drawings.

15.6.2 Provide shop detail drawings with sufficient detail to facilitate fabrication, manufacture, or installation. This includes a complete Bill of Materials (BOM), pipe spool drawings, internal piping details, cross-section details, and structural details.

15.6.3 Submit all final detailed drawings, calculations, analyses, and information necessary for equipment fabrication.

15.6.4 Submit all FMEA documentation.

15.7 90 % Design Review

15.7.1 Provide detailed written procedures, instructions, and drawings (including all lifting requirements) for system installation.

15.7.2 Provide list of required spares.

15.7.3 Provide startup and commissioning spares list, including all components or equipment that may be needed during startup and commissioning.

15.7.4 Provide operation manuals with detailed written instructions describing how the unit and components should be operated. Manuals shall include specific instructions, procedures, and illustrations for the following:

15.7.4.1 Safety Precautions – List personnel hazards and equipment or product safety precautions for all operating conditions.

15.7.4.2 Operator Service Requirements – Include instructions for services to be performed by the operator, such as adjustments, and inspections.

15.7.4.3 Environmental Conditions – Include a list of environmental conditions (temperature, humidity, and other relevant data) which are best suited for each product or piece of equipment and describe conditions under which equipment should not be allowed to run.

15.7.4.4 Lay-up Instructions – Include step-by-step instructions for lay-up.

15.7.5 Provide maintenance manuals with detailed written instructions to disassemble, reassemble, and maintain systems or components in an operating condition. Manuals shall include specific instructions, procedures, and illustrations for the following phases of maintenance:

15.7.5.1 Preventive Maintenance - Include the following information for preventive and scheduled maintenance to minimize corrective maintenance and repair:

15.7.5.1.1 Preventive Maintenance Plan and Schedule – Include manufacturer's schedule for routine preventive maintenance, inspections, testing, and adjustments required to ensure proper and economical operation and to minimize corrective maintenance and repair. Provide manufacturer's projection of preventive maintenance frequency of work, and hours to complete the task. Provide surveillance and in-service inspection recommendations.

15.7.5.2 Corrective Maintenance – Include manufacturer's schedule for procedures and instructions for correcting problems and making repairs. Include the following information for performing corrective maintenance:

15.7.5.2.1 Maintenance and Repair Procedures – Include instructions and list tools required to restore product or equipment to proper condition or operating standards.

15.7.5.2.2 Removal and Replacement Instructions – Include step-by-step procedures and list required tools and supplies for removal, replacement, disassembly, and assembly of components, assemblies, subassemblies, accessories, and attachments. Provide all tolerances, dimensions, settings, and adjustments required. Instructions shall include a combination of text and illustrations.

15.7.5.2.3 Recommended Spare Parts and Supply Lists – Include list of spare parts and supplies required for maintenance and repair to ensure continued service or operation without unreasonable delays. Include the cost of each item.

15.7.5.2.4 Parts Identification – Provide identification and coverage for all parts of each component, assembly, subassembly, and accessory of the end items subject to replacement. Include special hardware requirements, such as requirement to use high-strength bolts and nuts. Identify parts by make, model, serial number, and source of supply to allow reordering

without further identification. Provide clear and legible illustrations, drawings, and exploded views to enable easy identification of the items. When illustrations omit the part numbers and description, both the illustration and separate listing shall show the index, reference, or key number which will cross-reference the illustrated part to the listed part. Parts shown in the listings shall be grouped by components, assemblies, and subassemblies.

15.7.5.2.5 Other than Seller's Commercial Practice – End item manufacturer may add a cross-reference to implement component assemblies and parts requirements when implementation in manual form varies significantly from the style, format, and method of Seller's standard commercial practice.

15.7.5.2.6 Warranty Information – List and explain the various warranties and include the servicing and technical precautions prescribed by the Seller or contract documents to keep warranties in force.

15.7.5.2.7 Personnel Training Requirements – Provide information available from the Seller to use for training designated personnel to operate and maintain the equipment properly.

15.7.5.3 Calibration Testing Equipment and Special Tool Information – Include information on test equipment required to perform specific tests and on special tools needed for the operation, maintenance, and repair of components.

15.7.5.4 Provide Component Descriptions – Include comprehensive component descriptions describing, in detail, how each individual process component functions and the basic design basis.

15.7.6 Provide design and operational requirements per the following:

15.7.6.1 Design requirements – Include a list or table describing the maximum design limits and conditions required to safely operate the equipment (i.e., temperatures, pressures, etc.).

15.7.6.2 Operational requirements – Include a list or table describing the normal operating ranges for equipment (i.e., temperatures, pressures, etc.).

15.7.7 Provide analysis and design reports, including analytical data (stress, fluid dynamics, etc.) which demonstrates that an item satisfies all specified requirements.

15.7.8 Provide seismic analysis or test data reports providing data and demonstrating suitability of materials, components, or systems in relation to the conditions imposed by the stated seismic criteria.

15.7.9 Provide thermal stress analysis or test data reports providing data and demonstrating suitability of materials and components, in relation to the conditions imposed by thermal stresses.

15.7.10 Provide site storage and handling manuals including the requirements for lifting, or other handling requirements to prevent damage or deterioration during storage and handling at job site. Include return shipping instructions.

15.7.11 Provide inspection and test plan including detailed descriptions of the inspections and tests planned during the receipt, manufacturing, and conformance verification activities. Include identification of witness and hold points.

15.7.12 Provide welding procedures, specifications, and supporting qualification records required for welding, hard facing, overlaying, brazing, and soldering.

15.7.13 Provide material control procedures including controlling issuance, handling, storage, and traceability of materials such as weld rod.

15.7.14 Provide PMI procedures for performing PMI testing of materials.

15.7.15 Provide repair procedures including controlling material removal and replacement by welding, brazing, etc., subsequent thermal treatments, and final acceptance inspection.

15.7.16 Provide pressure testing procedures including hydro, air, leak, separation, or vacuum test procedures for performing hydrostatic or pneumatic structural integrity and leakage tests.

15.7.17 Provide inspection procedures for the purpose of determining that specified requirements (i.e., dimensions, properties, performance results, etc.) are met.

15.7.18 Provide radiographic testing procedures for identifying the presence and certain characteristics of discontinuities and inclusions in materials by x-ray or gamma ray exposure of photographic film.

15.7.19 Provide liquid penetrant testing procedures for detection of surface discontinuities in materials by application of a penetrating liquid in conjunction with suitable developing techniques.

15.7.20 Provide functional shop test procedures.

15.7.21 Provide integrated acceptance test requirements document per engineering specifications to demonstrate design function and operational parameters for the complete Ultrafilter.

15.7.22 Provide shipping preparation procedures for cleaning, packaging, and handling.

15.8 Final Design Review

Provide final design report including all design documents, manuals, and drawings that are specified in this specification. All procedures and instructions shall be completed and submitted to the Buyer a minimum of eight (8) weeks prior to Ultrafilter components and skid shipment.

Figure 1 **Ultrafilter Schematic**

Note: 10-in inlet and outlet shall be eccentric i.e. flush with bottom of shell for proper draining.

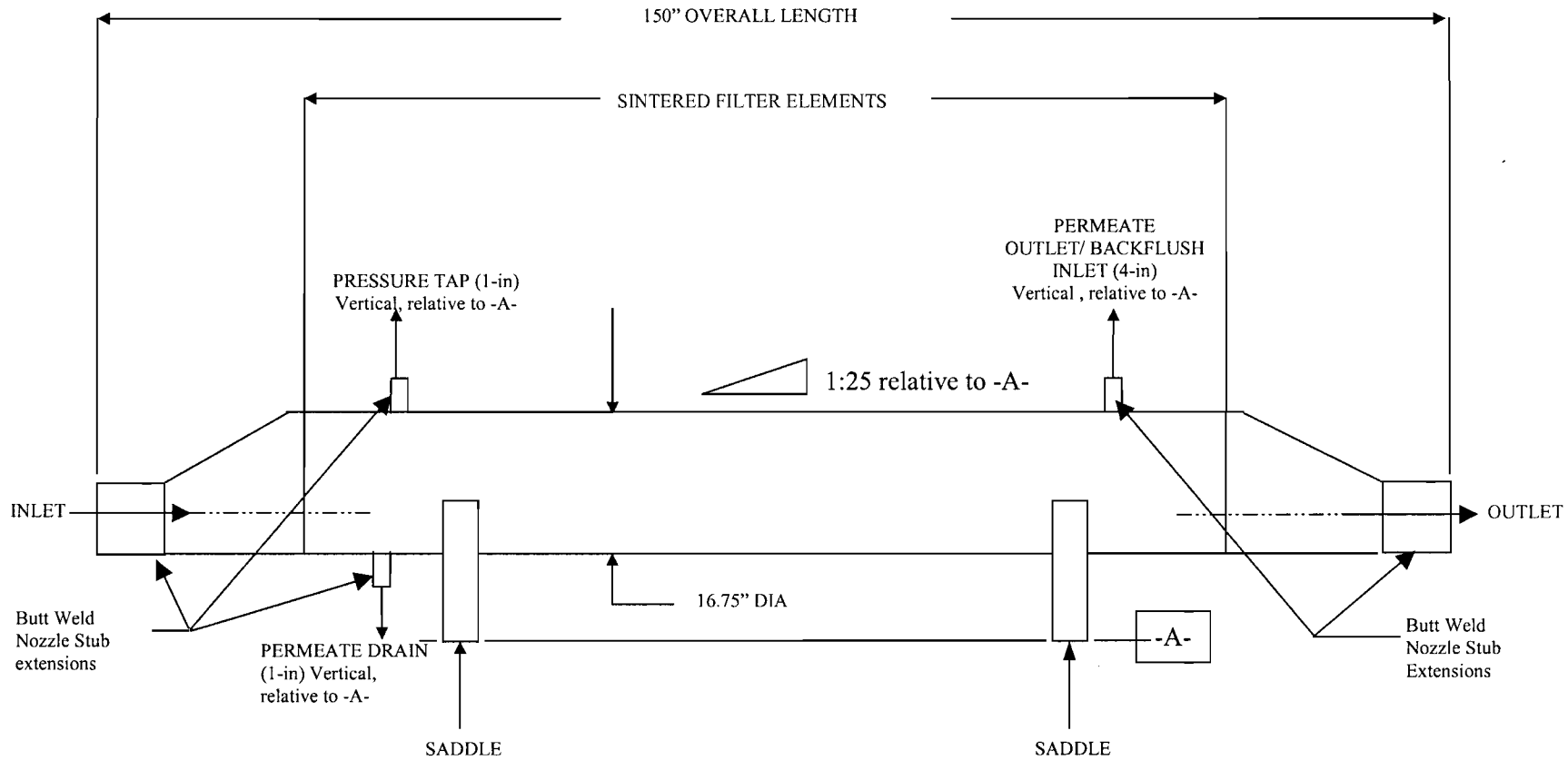

R10330982

RIVER PROTECTION PROJECT – WASTE TREATMENT PLANT

ISSUED BY RPP-WTP PMC INIT 7/23/04 DATE

ENGINEERING SPECIFICATION

FOR

RDP Spent Resin Dewatering Equipment Package

Best Available Copy

GERALD RUSSEL CHIARAMONTE STATE OF WASHINGTON 028043 REGISTERED PROFESSIONAL ENGINEER

7-22-04

EXPIRES. 11/9/2004

This bound document contains a total of 39 pages

Content applicable to ALARA? ☒ **Yes** ☐ **No**

ADR No. N/A **Rev**

Quality Designator
CM
DOE Contract No. DE-AC27-01RV14136

NOTE: Contents of this document are Dangerous Waste Permit Affecting.

REV	DATE	REASON FOR REVISION	BY	CHECK	REVIEW	QA	APEM/DEM
1	7/21/04	Issued for Permitting Use.	J. Hickman	S. Crow	N/A	N/A	R. Voke
0	5/4/04	Issued for Permitting Use. Incorporates 24590-PTF-3PN-MWD0-00001, 24590-PTF-3PN-MWD0-00002, 24590-PTF-3PN-MWD0-00003.	J. Hickman	G. Butt	N/A	N/A	M.Hoffmann

SPECIFICATION No. 24590-PTF-3PS-MWD0-TP003 **Rev** 1

Note: Please note that source, special nuclear and byproduct materials, as defined in the Atomic Energy Act of 1954 (AEA), are regulated at the U.S. Department of Energy (DOE) facilities exclusively by DOE acting pursuant to its AEA authority. DOE asserts, that pursuant to the AEA, it has sole and exclusive responsibility and authority to regulate source, special nuclear, and byproduct materials at DOE-owned nuclear facilities. Information contained herein on radionuclides of provided for process description purposes only.

Contents

1 Scope 1
1.1 Project Description and Location 1
1.2 System Description 1
1.3 Work by Others 1
1.4 Definitions 2
1.5 Mechanical Data Sheets 3
2 Applicable Documents 3
2.1 Government Documents 3
2.2 Industry Standards 4
2.3 Reference Documents/Drawings 4
3 Design Requirements 5
3.1 Basic Function 5
3.2 Performance 6
3.3 Environmental Conditions 7
3.4 Mechanical Design 7
3.5 Electrical Design 13
3.6 Instrumentation and Control Design 13
4 Materials 14
4.1 Material Requirements 14
5 Fabrication 15
5.1 Welding 15
6 Inspections and Examinations 15
6.1 Non-Destructive Examinations 16
6.2 Dimensional Inspections 16
6.3 Visual Weld Inspections 16
6.4 Liquid Penetrant Test 16
6.5 Radiography 16
6.6 Final Inspection 16
7 Testing 17
7.1 Shop Tests 17
7.2 Site Tests 17
8 Preparation for Shipment 17
8.1 Special Protective Coating 17
8.2 Tagging 17

8.3 Cleanliness 18
9 Quality Assurance 18
9.1 Quality Assurance Requirements 18
9.2 Supplier Deviations 18
10 Configuration Management 18
11 Documentation, Submittals, and Design Reviews 18
11.2 Vessel Documentation 19
11.3 Piping and Instrumentation Diagrams 19
11.4 Electrical 19
11.5 Instrumentation and Controls 19
11.6 Welding 19
11.7 Performance Test Reports 19
11.8 Equipment Mounting Details 20

Figures

Figure 1: Dewatering Equipment Skid Plan View 20
Figure 2: Dewatering Equipment Skid Side View Located in Room P-0119 21
Figure 3: Dewatering Skid Location Along South Wall in Room P-0119 22
Figure 4: Vessel Name Plate Drawing. 23
Figure 5: Spend Resin Dewatering P&ID 24

Tables

Table I: Equipment List 6
Table II: Pipe size & Associated Flow Rate 7

Appendices

Appendix A 25

1 Scope

1.1 Project Description and Location

The River Protection Project-Waste Treatment Plant (RPP-WTP) is a complex of waste treatment facilities where the US Department of Energy (DOE) Hanford Site tank waste will be pretreated and immobilized into a stable glass form via vitrification. The WTP Contractor will design, build, and start-up the RPP-WTP pretreatment and vitrification facilities for the DOE Office of River Protection (ORP). The waste treatment facilities will pretreat and immobilize the low-activity waste (LAW) and high-level waste (HLW) currently stored in underground storage tanks at the Hanford Site.

The Hanford Site occupies an area of about 560 square miles and is located along the Columbia River, north of Richland in the state of Washington. The RPP-WTP Facility will be constructed at the East End of the 200 East Area of the Hanford Site. The counties of Benton, Franklin, and Grant surround the Hanford Site.

1.2 System Description

The Spent Resin Collection and Dewatering Process System (RDP) supports the Cesium Ion Exchange Process System by removing spent ion exchange (IX) resin from the IX columns. The RDP system is the point of verification that spent IX resin meets waste acceptance criteria and can be transferred out of the facility for disposal as regulated mixed (radioactive and dangerous) waste. The process consists of removing the spent resin from IX columns, suspending and sampling the resin, and transferring it to a disposable dewatering container (DWC). The RDP system also includes the process for dewatering the resin once it is in the DWC.

This specification establishes the requirements for the design, fabrication, quality assurance, inspection, testing, qualification, and labeling of the Spent Resin Dewatering Equipment Package for use in the RPP-WTP Pretreatment Facility. This specification also provides the interface information for the RWH (Radioactive Solid Waste Handling) system for handling the dewatering container, shipping cask, fill head and any handling occurring during process (see Appendix A). This specification permits cost effective alternative design proposals. Alternatives may be proposed that provide enhancements affecting equipment in configuration, size, number, and function.

The scope of work for the Seller includes all work defined in this specification and its addenda and attachments. Work shall include, but is not limited to, the following. Provide fully detailed designs, drawings, supporting calculations, supporting analyses, procedures, and all labor, materials, fasteners, tooling, equipment, apparatus, instrumentation, shop drawings, and services necessary to manufacture, test, inspect, label, package and ship the Spent Resin Dewatering Equipment Package in accordance with (IAW) this specification and Section 2 of the Material Requisition (MR).

1.3 Work by Others

The Seller will not provide the following components or services:

- Transportation
- Material unloading and storage at job site
- Installation labor
- Piping and ductwork external to the equipment skid

- Service air
- Service water
- Electric power supply and wiring external to the equipment skid
- System programmable logic controller

1.4 Definitions

Buyer: Bechtel National, Inc. for the River Protection Project – Waste Treatment Plant.

Seller: Manufacturer, assembler, fabricator, vendor, supplier, or equal who provides equipment, systems, components, services, or other products for delivery or direct benefit to the Buyer.

Manufacturer: Refers to any company manufacturing equipment.

Modularization: A module is a group of components that can be manufactured and installed as a unit. These modular units are structurally self-supporting, allowing the module to be handled by crane. Whenever practical, modules will contain all the equipment associated with the process, including vessels, piping, and supports.

1.4.1 Acronyms

- AISC — American Institute of Steel Construction
- AMCA — Air Movement and Control Association
- ANSI — American National Standards Institute
- ASD — Manual of Steel Construction (Allowable Stress Design)
- ASME — American Society of Mechanical Engineers
- ASTM — American Society for Testing and Materials
- AWS — American Welding Society
- cfm — Cubic Feet Per Minute
- CFR — Code of Federal Regulations
- DBE — Design Basis Earthquake
- DOE — Department of Energy
- DOT — Department of Transportation
- DWC — Disposable Dewatering Container
- fps — Feet Per Second
- gpm — Gallons Per Minute
- HLW — High Level Waste
- IAW — In Accordance With
- ICN — Integrated Control Network
- in — Inch(es)
- IX — Ion Exchange
- LAW — Low Activity Waste
- MDS — Mechanical Data Sheet
- MR — Material Requisition
- MSDS — Material Safety Data Sheet
- NEC — National Electric Code
- NEMA — National Electrical Manufacturers Association
- NQA — Nuclear Quality Assurance
- ORP — Office of River Protection
- P&ID — Piping and Instrumentation Diagram
- psig — Pounds Per Square Inch Gauge (pressure measurement)

- PTF — Pretreatment Facility
- QAM — Quality Assurance Manual
- QAP — Quality Assurance Program
- QL — Quality Level
- RCRA — Resource Conservation And Recovery Act of 1976
- RDP — Spent Resin Collection and Dewatering Process System
- RFQ — Request For Quote
- RPP-WTP — River Protection Project-Waste Treatment Plant
- RWH — Radioactive Solid Waste Handling
- SC — Seismic Category
- SDDR — Supplier Deviation Disposition Request
- SSC — Structure, System, and/or Component
- UBC — Uniform Building Code
- UL — Underwriters' Laboratories, Inc.
- US NRC — United States Nuclear Regulatory Commission

1.5 Mechanical Data Sheets

Vendor will provide mechanical, electrical and instrument Mechanical Data Sheets (MDS). The data indicated on the MDS shall be used only for mechanical design considerations, such as materials of construction, vessel wall thickness calculations, stress and fatigue analyses. The Seller shall complete all MDS's for Buyer's review. The process design of the Spent Resin Dewatering Equipment Package shall be based on the process data provided in this specification.

2 Applicable Documents

Work shall be performed IAW the referenced codes, standards, and documents listed below which are an integral part of this specification. When specific chapters, sections, parts, or paragraphs are listed following a code, industry standard, or reference document, only those chapters, sections, parts, or paragraphs of the document are applicable and shall be applied. If a date or revision is not listed, the latest issue, including addenda, shall apply. When more than one code, standard, or referenced document covers the same topic, the requirements for all must be met with the most stringent governing.

2.1 Government Documents

Federal

HNF-EP-0063	Hanford Site Solid Waste Acceptance Criteria
DOE-RL-92-36	Hanford Site Hoisting and Rigging Manual
DOE-RL-2002	Hanford Sitewide Transport Safety Document

U.S. Nuclear Regulatory Commission (NRC)

10 CFR-71	Packaging And Transportation Of Radioactive Material
10 CFR-835	Occupational Radiation Protection
NUREG/CR-3854	Fabrication Criteria for Shipping Containers

NUREG/CR-3019	Recommended Welding Criteria For Use in the Fabrication of Shipping Containers for Radioactive Materials shall be followed.
NRC Regulatory Guide 7.11	Fracture Toughness Criteria of Base Material for Ferritic Steel Shipping Cask Containment Vessels with a Maximum Wall Thickness of 4 inches (0.1 m), as applicable.
NRC Regulatory Guide 7.12	Fracture Toughness Criteria of Base Material for Ferritic Steel Shipping Cask Containment Vessels with a Wall Thickness Greater Than 4 Inches (0.1 m) But Not Exceeding 12 Inches (0.3 m), as applicable.

2.2 Industry Standards

American Society for Testing and Materials (ASTM)

ASTM A-36	Material Tests for Structural Metal Shapes and Plates
ASTM 500 Grade B	Material Tests for Structural Metal Tubes
ASTM A-570 Grade 50	Material Tests for Sheet Metal

American Society for Mechanical Engineers (ASME)

ASME B16.5	Steel Pipe Flanges
ASME B31.3-1996	Process Piping

ASME Boiler & Pressure Vessel Code

American National Standards Institute (ANSI)

ANSI N14.5-1997	Leakage Tests on Packages for Shipment
ANSI N14.6	Special Lifting Devices for Shipping Containers Weighing 10,000 Pounds or More

Underwriters Laboratories, Inc. (UL)

UL-508	Industrial Control Equipment

Air Movement And Control Association International, Inc. (AMCA)

AMCA 99-86	Standards Handbook

2.3 Reference Documents/Drawings

The latest revision of the following documents shall be used unless otherwise noted in Section 2 of the MR.

SPECIFICATIONS

Bechtel National

24590-WTP-PW-P30T-00001	WTP End Prep Detail For Field Butt Welds
24590-PTF-M6-RDP-P0002	Ion Exchange Spent Resin Collection And Dewatering

24590-WTP-3PS-FB01-T0001	Engineering Specification for Structural Design Loads for Seismic Category III & IV Equipment and Tanks
24590-BOF-3PS-ME00-T0001	Engineering Specification for Water Cooled Centrifugal Chillers
24590-WTP-3PS-P000-T0001	Engineering Specification for Piping Material Classes
24590-WTP-3PS-MV00-TP002	Engineering Specification for Seismic Qualification Criteria for Pressure Vessels
24590-WTP-3PS-MV00-TP001	Engineering Specification for Pressure Vessel Design and Fabrication
24590-WTP-3PS-MVB2-T0001	Specification for Welding of Pressure Vessels, Heat Exchangers and Boilers
24590-WTP-3PS-SS00-T0002	Welding of Structural Stainless Steel and Welding of Structural Carbon Steel To Structural Stainless Steel
24590-WTP-3PS-MUMI-T0002	Engineering Specification for Low Voltage Induction Motors
24590-WTP-3PS-NWP0-T0001	General Welding and NDE Requirements for Supplier Fabricated Piping
24590-WTP-3PS-PS02-T0001	Engineering Specification for Shop Fabrication of Piping
24590-WTP-3PS-AFPS-T0001	Engineering Specification for Shop Applied Special Protective Coatings for Steel Items and Equipment
24590-WTP-3PS-M000-T0002	Engineering Specification for General Specification for Mechanical Handling Equipment Design and Manufacture
24590-WTP-3PS-G000-T0003	Packing, Handling and Storage Requirements
24590-WTP-3PS-G000-T0001	General Specification for Supplier Quality Assurance Program Requirements
24590-WTP-3PS-JQ07-T0001	Engineering Specification for Instrumentation for Package Systems
24590-WTP-3PS-EKP0-T0001	Engineering Specification for Electrical Requirements for Packaged Equipment
24590-WTP-3PS-G000-TP002	Engineering Specification for Positive Material Identification (PMI)
24590-WTP-3PS-SS00-T0001	Engineering Specification for Welding of Carbon Structural Steel

3 Design Requirements

3.1 Basic Function

3.1.1 The dewatering equipment package serves the following functions in the RDP system:

- Provides bulk dewatering of spent IX resin in the DWC simultaneous to filling of the DWC from Spent Resin Slurry Vessels (RDP-VSL-00002A/B/C).

- Provides final dewatering of spent IX resin in dewatering container to required water content (less than 1% vol./vol. free water).
- Provides transfer of all dewatered transport liquid back to the Spent Resin Slurry Vessels.

3.1.2 The Dewatering Equipment Package shall demonstrate the ability to backflush piping and equipment components. All trapped residuals shall be removed minimizing potentially contaminated areas.

3.1.3 The package shall dewater SuperLig SL-644 resin (registered trademark of IBC Advanced Technologies, Inc.) for Cesium (Cs) ion exchange.

3.1.4 The components of the Spent Resin Dewatering Equipment Package are found in Table I.

Table I: Equipment List

ITEM	PLANT ITEM NUMBER
Dewatering Pump	RDP-PMP-00011
Condenser Vessel	RDP-VSL-00004
Chiller Unit	RDP-CCL-00001 & RDP-CHU-00001
Blower	RDP-BLWR-00001
Piping	See Figure 5
Dewatering Container	"Not Tagged"
Container Fill-Head	24590-PTF-PY-RDP-SP-00001
Transportation Cask	24590-PTF-HC-RDP-CASK-00001
Skid Structure	"Not Tagged"
Instrumentation & Controls	See Figure 5
Valves	See Figure 5
Electrical Equipment	"Not Tagged"

3.1.5 The Seller shall provide the following:

- An analysis of operating life for all components that are subject to service conditions. Show all assumptions and references.
- All special lifting equipment required for installation and maintenance of the Spent Resin Dewatering Equipment Package.
- Design envelope parameters (differential pressure and flow rates) to be used in design of the dewatering skid package.
- One lot of any special tools required for installation and maintenance.
- Procure all materials and equipment unless otherwise stated by the Buyer.
- Identify all interfaces for external connections with equipment and services supplied by the Buyer.
- All special lifting equipment required for handling the dewatering container, cask before, during and after the dewatering process.

3.2 Performance

3.2.1 The dewatering package shall process 7,500 gallons of resin slurry delivered in a batch process. Batch delivery shall be continuous uninterrupted flow based off Table II, with simultaneous bulk dewatering to prevent resin from settling in transfer lines between slurry vessels and the DWC. The flow rate, depending on the pipe size, can be determined in Table II.

Table II: Pipe size & Associated Flow Rate

Pipe Size (in)	Min: (gpm)	Max: (gpm)
1.5	38.07	57.11
2	62.76	94.13
2.5	89.54	134.31
3	138.26	207.38

3.2.2 Due to processing timing requirements in other parts of the RDP system, the dewatering process duration shall be kept to a minimum and shall not exceed 3 days to complete.

3.2.3 The slurry delivered to the dewatering container will contain 2 to 15% vol./vol. Solids. It will be delivered up to 140 gpm with a velocity of 5 to 8 fps. Delivery pressure shall not exceed 50 psig.

3.2.4 Cooling water will be supplied at 55 psig and 80 °F. It shall be returned at no less than 45 psig, and not above 95 °F. Demineralized flush water shall be supplied at 72.5 psig and 77 °F.

3.2.5 The equipment package components shall be compatible with the regulated mixed (radioactive and dangerous) spent resin waste containing residual Cesium 137 of a maximum 60 microcuries per gram. The normal total-batch-activity is approximately 66 Ci (Curie's) of Cesium 137.

3.2.6 The Equipment Skid and sub components, Fill Head, Containers and Cask shall be load tested at 150% of the measured weight as follows:

- The assembly lifting lugs
- After completion of the load test, the lifting lug attachment welds shall be inspected by dye penetrant examination.

3.3 Environmental Conditions

3.3.1 The Dewatering Equipment Package will be located indoors in plant rooms maintained between 59 °F min. and 113 °F max. with a relative humidity of 10-95% during normal operation.

3.3.2 The Dewatering Equipment Package components, properly protected, may be stored outdoors at ambient extreme temperature range of -23 °F to 113 °F and relative humidity of 5-100%.

3.4 Mechanical Design

3.4.1 Dewatering Skid (RDP-SKID-00001)

3.4.1.1 The dewatering skid shall be installed in a room adjacent to the dewatering container. See Figures 1-3 for the Layout Schematics identifying equipment locations. Skid dimensions shall not exceed 8 feet in width, 10 feet in height, and 14 feet in length.

3.4.1.2 The dewatering skid shall be shipped preassembled or as convenient modular units as determined by the Seller.

3.4.1.3 The Dewatering Equipment Package shall be designed as a completely assembled package with its accessories and auxiliary equipment forming an integral unit in which all components are properly matched. Except for minor modifications, the package shall include standard manufactured products commercially available.

3.4.1.4 The Dewatering Equipment Package and appurtenances will be used in a plant that has a design life of 40 years. All components that require maintenance or replacement during the design life shall be identified. The Dewatering Equipment Package shall be designed to facilitate ease of "hands on" maintenance and replacement of components prone to wear.

3.4.1.5 Maintenance will be performed after the Dewatering Equipment Package has been flushed and decontaminated while in shutdown mode. Any equipment components prone to failure must possess features to allow decontamination prior to maintenance reducing radiation exposure.

3.4.1.6 The dewatering equipment skid and individual equipment components shall be self-supporting, capable of carrying all static loads and the stress imposed during shipment, installation, and operation. The Seller shall identify the structural components seismic requirements and provide lateral supports for seismic restraint of the dewatering equipment skid. The equipment package skid weight shall not exceed 50,000 lbs.

3.4.1.7 The Condenser vessel, dewatering pump, blower unit, chilling equipment, and skid structure shall be designed to meet seismic category III. Seismic category III equipment shall be IAW AISC ASD and UBC (Zone 2B). The Seller shall perform thermal and static stress analyses for all structures, systems, and components. The Seller shall provide design calculations IAW 24590-WTP-3PS-FB01-T0001. The Seller shall specify the installation requirements including bolt sizes, location, and loads. Skid Anchor points are identified in the Figures 1-3 for the equipment skid.

3.4.2 Dewatering Pump

3.4.2.1 The dewatering pump shall return transport liquid to vessels RDP-VSL-00002A, 2B, and 2C through approximately 350 feet of pipe and an elevation increase of approximately 30 feet. The pump suction lift from the dewatering container is approximately 10 feet with approximately 50 feet of pipe on the suction side. The pump shall be capable of self priming. The dewatering pump capacity shall be sufficient to support a continuous feed to the dewatering container.

3.4.2.2 The pump drive motor shall be IAW 24590-WTP-3PS-MUMI-T0002.

3.4.2.3 The Seller shall provide data sheets showing pump capacity, flowrates, pressures, and all relevant characteristics.

3.4.2.4 The pump shall be located and installed on RDP-SKID-00001.

3.4.3 Condenser Vessel

3.4.3.1 The Condenser Vessel shall condense and separate water vapor from air that is drawn from the DWC via RDP-BLWR-00001. The collected water shall be transferred to vessels RDP-VSL-00002A, 2B, and 2C by the dewatering pump. The internal maximum pressure created by the operating process shall be incorporated into the design of the vessel. The Condenser Vessel shall include chilling lines used in moisture separation. The pressure inside the chilling lines must exceed the working pressure within the Condenser Vessel to minimize the effects of utilities contamination in the event of pipeline failure.

3.4.3.2 The Condenser Vessel shall include a de-entrainment system to separate water droplets from the moving airstream. Qualification parameters shall include efficiency of de-entrainment system and differential pressure-performance characteristics.

3.4.3.3 The Condenser Vessel shall be designed IAW the Buyer's MDS, 24590-WTP-3PS-MV00-TP001, 24590-WTP-3PS-MV00-TP002 and 24590-WTP-3PS-FB01-T0001.

3.4.3.4 Vessel configuration, materials, pressures, temperatures, and all relevant characteristics shall be provided. A Vessel name plate shall be attached (see Figure 4).

3.4.3.5 The vessel shall be located and installed on RDP-SKID-00001.

3.4.4 Chiller Unit

3.4.4.1 The Chiller must be an off-the-shelf air-cooled unit utilized and manufactured in commercial industry. The pressure inside the chilling lines must exceed the working pressure within the Condenser Vessel. The working pressure of the coolant shall exceed the pressure requirements of the chiller lines to minimize the effects of cross contamination in the event of pipeline failure. The Chiller Unit includes RDP-CCL-00001 and RDP-CHU-00001. The airstream passes over the chilling lines dropping in temperature causing water condensation.

3.4.4.2 Deleted.

3.4.4.3 The Seller shall provide data sheets showing chiller configuration, materials, pressures, temperatures, and relevant characteristics.

3.4.5 Blower

3.4.5.1 The blower circulates air through the DWC evaporating liquid, and routes the vapor through the condenser vessel (liquid removal before returning to the blower). The blower housing shall incorporate a barrier to limit damage from foreign materials contacting rotating vanes, lobes, or fins (As applicable to type of blower utilized). The blower shall be separated from the drive motor by mechanical barrier such that no shared airspace exists.

3.4.5.2 The blower drive motor shall be IAW 24590-WTP-3PS-MUMI-T0002.

3.4.5.3 If centrifugal style, the blower shall be IAW AMCA 99-86.

3.4.5.4 The Seller shall provide data sheets showing blower capacity, flowrates, pressures, volume, temperatures, weights, and relevant characteristics.

3.4.5.5 The blower shall be located and installed on RDP-SKID-00001.

3.4.6 Piping

3.4.6.1 The Seller shall furnish and install pipe and pipe supports as required within the equipment skid (Section 3.4). Pipe bending tolerances shall be within 5 degrees to nominal bend radius. Piping shall be seismically designed to accommodate and interface with equipment components.

3.4.6.2 Pipe flanges shall be IAW ASME B16.5.

3.4.6.3 The Seller shall furnish thermowells and thermal insulation as required to support design and operations plan.

3.4.6.4 Piping and Pipe materials shall be IAW ASME B31.3-1996 and 24590-WTP-3PS-P000-T0001.

3.4.7 Dewatering Container & Fill Head

3.4.7.1 The Dewatering Container shall separate water from the resin. The collected water shall be transferred to vessels RDP-VSL-00002A, 2B, and 2C by the dewatering pump. All dewatering is to take place in the dewatering container. Designs that are compatible with that approach are acceptable. The dewatering package shall dewater the resin to less than 1% vol./vol. free water. The process may be qualified with an initial check. In addition, a standard operational procedure/manual is to be provided in order to ensure that the less than 1% vol./vol. free of water requirement is achieved during routine dewatering processes.

3.4.7.2 The initial contract during cold start up will require 5 containers. During commissioning the containers will be replaced when filled (semi-monthly). The projection for the entire plant life (40 years) will use roughly 1,000 containers approximately one every two weeks.

3.4.7.3 The free liquid will largely be pumped out through the screens in the dewatering container. The remainder will be removed by evaporation. The amount of removal in each step depends on screen locations in the dewatering container and the capabilities of the dewatering pump.

3.4.7.4 The internal maximum pressure created by the operating process shall be incorporated into the design of the container.

3.4.7.5 SuperLig® 644 resin used in small-scale columns to separate cesium from AW-101 and AN-107 waste samples (feed envelopes A and C) were fully eluted, washed with deionized water and washed with 0.1 M NaOH. The samples were then analyzed to determine the concentration of Resource Conservation And Recovery Act of 1976 (RCRA) listed metals, radionuclides, and inorganic cations in spent resin. The analytes detected at levels above the minimum reportable quality include Cr (670 μg/g), K (220 μg/g), Na (83,800 μg/g), ^{99}Tc (6.74 μg/g), ^{238}U (14.8 μg/g), ^{60}Co (1.31 μCi/g), and ^{137}Cs (60 μCi/g).

3.4.7.6 The dewatering container shall fit within the transportation cask (see cask requirements for size constraints). The dewatering container shall be filled to 90% of it's total internal volume with either resin or void filler. Any void space filling material shall be selected and used IAW Appendix E of the Hanford Site Solid Waste Acceptance Criteria (HNF-EP-0063). The dewatering container's minimum volume is 665 gallons.

3.4.7.7 The Dewatering Container shall be designed IAW the Sellers MDS and 24590-WTP-3PS-FB01-T0001.

3.4.7.8 The dewatering container and burial shall meet the requirements of "Hanford Site Solid Waste Acceptance Criteria" (HNF-EP-0063) chapter 4.

3.4.7.9 Lifting attachments shall be provided for removing the container from the cask, and for removing the lid from the container and replacing it back again. The lifting attachment shall be designed to be removed from the crane hook remotely without operator assistance, thereby, allowing for total remote operation of container lid removal. Lifting attachments shall be designed per ANSI N14.6 and DOE-RL-92-36.

3.4.7.10 Dewatering container and fill-head design and operations shall be compatible with remote handling equipment provided by system RWH within the available space of the dewatering room (see Appendix A).

3.4.7.11 The Buyer's MDS shall be completed and include container configuration, materials, pressures, temperatures, and all relevant characteristics shall be provided.

3.4.7.12 Implementing a fill-head is recommended, but not required. The fill head needs to be positioned on the container and cask though remote means.

3.4.8 Transportation Cask

3.4.8.1 The cask shall overwrap the dewatering container and shield the contents. It will be reusable and is not disposed with the dewatering container. The cask consists of the cask shell, bottom, and lid. The cask must be able to comply with transport requirements including 49 CFR 178.350, specifications for packaging. The design is based on Standard Industrial Packaging 2 (IP2) with applicable waivers established under the Hanford Sitewide Transport Safety Document, DOE-RL-2002. The service life of the cask shall be forty (40) years.

3.4.8.2 The cask shall not exceed 88 inches square by 112 inches high including lifting brackets. The weight of a cask with a loaded Dewatering Container will not exceed 35 tons (70,000 lb).

3.4.8.3 The cask shall be capable of shielding personnel. Personnel shall not receive more than 10 mrem/hr with a target of 2.5 mrem/hr or lower at 30 cm from the cask.

3.4.8.4 The internal dimensions for the cask shall be sufficient to accommodate the dewatering container.

3.4.8.5 The lifting device for the cask shall be in the same orientation as the Dewatering Container.

3.4.8.6 Transportation cask design and operations shall be compatible with system RWH within the available space of the dewatering room (see Appendix A).

3.4.8.7 The materials shall be compatible with, or provide adequate resistance to, the corrosive effects of materials (liquids, vapors, gases, solids, and byproducts) that they shall be in contact with throughout their life cycle. The materials shall also be selected to minimize chemical-galvanic reactions between the payload constituents and the cask.

3.4.8.8 The Cask shall be fabricated equivalent to ASME Boiler & Pressure Vessel Code, up to, but not including, the code stamp. The materials of construction shall meet the fracture toughness requirements of NRC Regulatory Guide 7.11 and NRC Regulatory Guide 7.12.

3.4.8.9 Seals and Gaskets shall be selected to withstand the radiological, chemical, thermal, and physical properties of the payload.

3.4.8.10 Deleted

3.4.8.11 The buyer must approve all fabrication drawings and travelers.

3.4.8.12 All welds shall be smoothed to 125 Root Mean Square (RMS). All welds and weld joints shall comply with ASME Boiler & Pressure Vessel Code, up to, but not including, the code stamp.

3.4.8.13 Lifting attachments shall be provided for removing the cask from the trailer, and for removing the lid from the cask and replacing it back on the cask. The lifting attachment shall be designed to be removed from the crane hook remotely without operator assistance, thereby allowing for total remote operation of cask lid removal once the cask bolts are removed. Lifting attachments shall be designed per ANSI N14.6 and DOE-RL-92-36.

3.4.8.14 A tiedown system shall be designed to secure the cask system to the trailer. The tiedown system shall meet the requirements of 10 CFR 71.45. The tiedown system shall be designed to allow for the safe inspection, minor repairs, and replacement of the cask lid gaskets and seals (e.g., operator does not have to go under cask lid to replace the seals).

3.4.8.15 The cask design and payload shall prevent a flammable gas mixture in the headspace and annulus during a period of time twice the maximum expected shipping time. Estimated maximum shipping time is 48 hours. There must be a designed provision for safely inerting or purging the container and cask.

3.4.8.16 Deleted

3.4.8.17 During, and subsequent to accident conditions, the release of materials from the cask, including the venting system shall not exceed the limits set in Paragraph 3.4.8.21.

3.4.8.18 Instrumentation used to verify leak-tightness shall be calibrated to national standards before and after testing.

3.4.8.19 The cask design shall incorporate two (2) emergency vent ports for releasing gas. These ports shall be designed to be opened with a designed special device and to vent pressure away from the operator. The design shall also eliminate radiation streaming. These vents shall be designed for helium purging of the cask interior prior to transport and receipt at lined portions of the low level burial grounds.

3.4.8.20 The cask lid shall be designed to be a positive fastening device that cannot be opened unintentionally. The lid design shall incorporate tamper-indicating devices.

3.4.8.21 Deleted

3.4.8.22 Deleted

3.5 Electrical Design

3.5.1 The dewatering skid and equipment shall be completely factory pre-wired. Hard wiring interfaces shall be identified in the electrical drawings for Buyer to locate and place utilities. Electrical and control cabinets shall be installed on the dewatering equipment skid. The Dewatering Equipment Electrical Package shall be designed and fabricated IAW UL-508 and 24590-WTP-3PS-EKP0-T0001.

3.5.2 Electric motors shall be determined by the Seller and motor data sheets shall be submitted to the buyer. The electric motors shall be IAW specification 24590-WTP-3PS-MUMI-T0002.

3.6 Instrumentation and Control Design

3.6.1 All instrumentation systems and related equipment (cabinets, racks, conduits, etc) shall meet the requirements specified in Specification 24590-WTP-3PS-JQ07-T0001. See the Purchase Order Technical Notes for exceptions.

3.6.2 All instrumentation for the Dewatering Equipment Package shall be provided by the Seller, including switches, sensors, detectors, transmitters, and interlocks for control and monitoring of the Seller's equipment.

3.6.3 Provide the following for instrumentation and controls:

- instrument data sheets
- installation details
- functional test setpoints
- operating parameter setpoints
- control requirements
- control system block diagram schematics

3.6.4 Packaged systems will be integrated into the WTP Integrated Control Network (ICN). The Buyer will provide a control platform on behalf of the Seller. The Buyer supplied control platform will regulate and operate the Dewatering Equipment Package. The Seller will provide the instrumentation fully wired up to the terminal blocks (Foundation Fieldbus spur blocks). The seller shall provide a RIO enclosure or panel to wire non fieldbus instrumentation (Classic I/0: AI/AO/DI/DO). The following ABB or buyer approved equivalent equipment should be included in the seller provided RIO enclosure or panel:

1) Redundant CI840 Fieldbus Communication Interface Profibus DP/V1

2) AI810 Analog Input Module (if required)

3) AO810 Analog Output Module (if required)

4) DI810 Digital Input Module (if required)

5) DO810 Digital Output Module (if required)

6) TU810 Compact Module Termination Units (as required)

7) Profibus to Fiber Converter (Hirschmann OZD-Profl 12M G12 or buyer approved equivalent)

8) Redundant Power Supplies (SD823 24vdc 10A and SD822 24vdc 5A) (2 each)

9) SS822 Voting Unit (2)

The RIO enclosure should be mounted as part of the dewatering skid.

The seller shall follow 24590-WTP-3PS-JQ07-T0001, *Instrumentation for Package Systems* For enclosure requirements

The seller will also provide all of the functional and performance requirements for development of the software as specified in Section 3.5 of 24590-WTP-3PS-JQ07-T0001, *Instrumentation for Package Systems*. The Buyer will provide the control cabinet (with the controllers and software pre-programmed into the controllers) to the Seller to perform the factory acceptance tests at the vendor's facilities. The Buyer will provide any ABB-manufactured equipment listed above to the Seller for installation into the Seller's I/O cabinet.

3.6.5 All software will be provided on the Buyer's control platform. Development of software will be performed by the Buyer. The Seller shall provide to the Buyer all functional and performance requirements for software development in the Dewatering Equipment Package.

3.6.6 The Seller shall interface with the control platform and perform factory acceptance tests at the Seller's facility. The factory acceptance tests shall be IAW Specification 24590-WTP-3PS-JQ07-T0001.

3.6.7 All instrumentation equipment shall be fully assembled, wired, and mounted before delivery.

3.6.8 The Instrumentation for the Dewatering Equipment Package shall be IAW the Pipe Schematic (see Figure 5) and include the following:

- Dewatering pump shut-off signal caused by DWC screen plug-up and low moisture indication as well as pump protection controls for high pressure or high temperature.
- Dewatering pump and flow control valve shut-off interlock on container fill-up, screen plug-up, differential pressure, and resin overflow signal.
- The resin slurry level and water level in the DWC shall be maintained by control-valve and dewatering-pump signals.
- Level measurement shall be performed in RDP-VSL-00004. The instrumentation shall monitor level and provide signals to initiate and shutdown liquid transfer via the dewatering pump.
- Pressure measurement shall be performed to assess condition and performance.
- Moisture measurement shall be performed to identify completion of resin dewatering to required conditions (1 % vol/vol free water in the DWC).

4 Materials

4.1 Material Requirements

4.1.1 Certified Material Test Reports (CMTR) and Certificates of Conformance (C of C) will be required for all materials.

4.1.2 Piping, pumps, valves, and other components which come in contact with the transport liquid shall follow the recommendations listed in 24590-WTP-3PS-M000-T0002 (Appendix C "Radiation Resistant Materials").

4.1.3 All structural metal shapes and plates shall be ASTM A-36. All structural metal tubes shall be ASTM-500 Grade B. Sheet metal shall be ASTM A-570 Grade 50.

4.1.4 All materials used to fabricate the Dewatering Equipment Package shall be able to withstand the radiation levels expected as specified in this specification.

4.1.5 The Seller shall show material designation on relevant submittal drawings.

5 Fabrication

The Seller shall obtain written notice from the Buyer prior to the start of fabrication activities. Fabrication of vessels, pipework, and mechanical handling shall be performed IAW 24590-WTP-3PS-MV00-TP001, 24590-WTP-3PS-PS02-T0001 and 24590WTP-3PS-M000-T0002. Lap joints for vessel construction are not permitted.

5.1 Welding

5.1.1 Use of backing strips on vessel welds and nozzle rings on nozzle welds are not permitted. Welding shall be performed IAW the following specifications:

Welding of vessels:

24590-WTP-3PS-MV00-TP001 and 24590-WTP-3PS-MVB2-T0001

Welding of piping:

24590-WTP-3PS-NWP0-T0001 and 24590-WTP-3PS-PS02-T0001

Welding of structural stainless steel:

24590-WTP-3PS-SS00-T0002

Welding of carbon structural steel:

24590-WTP-3PS-SS00-T0001

5.2 Preparation of nozzles for field welding

5.2.1 Preparation of nozzles for field welding shall be IAW 24590-WTP-PW-P30T-0001.

5.2.2 Nozzles for field welding shall be no less than 3.5 inches to the edge for compatibility with the automatic welders.

6 Inspections and Examinations

All inspections and examinations shall be performed meeting the requirements of the references in this specification. Specific inspection and examination methods identified as optional in the references shall not be performed unless required below. The Seller shall notify the Buyer in advance of examinations or

tests. The Buyer may send representatives to witness or perform independent examinations or tests. The Seller shall maintain a positive system for identifying inspection and testing status of items and systems.

6.1 Non-Destructive Examinations

6.1.1 Vessel NDE shall be IAW the requirements in specification 24590-WTP-3PS-MV00-TP001.

6.1.2 Pipework welds shall be inspected IAW the requirements outlined in specification 24590-WTP-3PS-PS02-T0001.

6.1.3 Hydrotesting shall be performed before acceptance testing.

6.2 Dimensional Inspections

6.2.1 The Seller shall develop and implement a procedure to dimensionally inspect each fabricated item IAW the applicable references in this specification. The procedure shall include the type of measuring device(s) to be used and identify how they will be checked for calibration status. Dimensions shall be within tolerances identified on the skid construction drawings.

6.2.2 The Seller shall record all dimensional data, indicating the actual dimensions, the temperature, the date and time of inspections, and signatures of the certified inspection personnel.

6.3 Visual Weld Inspections

6.3.1 Visual weld inspections shall be performed and comply with specifications:

Carbon structural steel:

24590-WTP-3PS-SS00-T0001

Structural stainless steel:

24590-WTP-3PS-SS00-T0002

6.4 Liquid Penetrant Test

6.4.1 Dye penetrant examinations shall be performed and comply with specifications:

Carbon structural steel:

24590-WTP-3PS-SS00-T0001

Structural stainless steel:

24590-WTP-3PS-SS00-T0002

6.5 Radiography

6.5.1 Radiographic examinations shall be IAW the applicable references identified in this specification.

6.6 Final Inspection

6.6.1 The Seller shall develop and implement a procedure for final inspection of each fabricated item. The inspections shall be performed after completion of all fabrication, cleaning, and testing, and just prior to final packaging. The inspections shall include inspection of all surfaces for contamination. Visible evidence of contamination is not acceptable. The Seller

shall prepare a final inspection report for each item, which documents the results of the final inspection. The Seller shall include the final inspection report in the documentation package for each piece.

7 Testing

All testing shall be performed meeting the requirements of the references in this specification. Specific testing methods identified as optional or non-mandatory in the references shall not be performed unless required below. Functional and performance tests of all mechanical equipment shall be performed by the Seller. Testing procedures shall be submitted for Buyer's review. The Buyer reserves the right to witness all shop tests and shall be given a minimum of 10 days written notice prior to each test date. All Seller supplied lifting yokes shall be load tested to 3 times the design load.

7.1 Shop Tests

7.1.1 Shop tests shall be performed IAW the following Buyer specifications:

A "Full Test" shall be performed on each electrical motor:

24590-WTP-3PS-MUMI-T0002

Testing of instrumentation and controls systems:

24590-WTP-3PS-JQ07-T0001

Vessel testing criteria:

24590-WTP-3PS-MV00-TP001

7.2 Site Tests

7.2.1 Buyer's startup personnel will perform tests after initial installation. Buyer may request Seller's assistance during testing and startup.

8 Preparation for Shipment

The fabricated equipment package shall be shipped as a single skid. The delivered package shall include all equipment and accessories fully assembled, wired, and skid mounted requiring only connection to the Buyer's electrical and control systems, and piping. If shipping size is a limitation, units may be fabricated and delivered in sections or subassemblies after permission to proceed has been obtained from the Buyer.

Specific shipping-preparation requirements as identified in the applicable references of this specification shall be followed. All remaining equipment included in this specification shall be packaged, shipped, and stored IAW 24590-WTP-3PS-G000-T0003.

8.1 Special Protective Coating

8.1.1 Seller fabricated equipment and components shall be prepared and coated IAW specification 24590-WTP-3PS-AFPS-T0001.

8.2 Tagging

8.2.1 Tagging shall be IAW 24590-WTP-3PS-G000-T0003.

8.2.2 Instruments shall also be identified with Buyer provided tag numbers if applicable.

8.3 Cleanliness

8.3.1 Remove all dirt, oil, and grease, loose mill scale, weld spatter and other foreign matter on surfaces to be painted.

9 Quality Assurance

9.1 Quality Assurance Requirements

9.1.1 Seller's Quality Assurance Program (QAP) Manual shall be submitted to buyer for review and shall contain the requirements detailed in the Supplier Quality Assurance Program Requirements Data Sheets listed in Section 2 of the MR. The Seller's QAP Requirements are included in specification 24590-WTP-3PS-G000-T0001.

9.1.2 The successful bidder must pass a pre-award survey by the Buyer. Seller shall demonstrate that its quality program is in compliance with the procurement quality requirements listed in the Supplier Quality Assurance Program Requirements Data Sheet. The Seller shall allow the Buyer, its agent, and DOE access to their facility and records pertaining to this purchase order for the purpose of QA Audits and Surveillance at mutually agreed times.

9.2 Supplier Deviations

9.2.1 Each Supplier shall be required to identify and promptly document all deviations from the requirements of the procuring documents. In addition, the Supplier shall be required to describe the recommended disposition based on appropriate analysis. Submittals of request for deviations from lower-tier suppliers shall be through the Seller to RPP-WTP. Seller-proposed deviations from procurement documents shall be initiated by use of Supplier Deviation Disposition Request (SDDR) form attached to the MR.

10 Configuration Management

The Dewatering Equipment Package components covered by this specification are identified with Equipment Numbers shown in the drawings submitted with the Material Requisition.

11 Documentation, Submittals, and Design Reviews

The Seller shall submit all detailed designs, drawings, documentation, procedures, instructions, calculations, analyses, manufacturer documentation, manufacturer data, inspection reports, test reports, certifications, certificates, manuals and MSDS, including applicable codes, standards, drawings and reference documents of this specification and MR. The Buyer will Provide 30%, 60%, 90%, and Final Design Reviews. All major repairs shall be documented in a verification report and submitted to the Buyer for review. The Seller shall submit a schedule and Quality Verification documents to Buyer Engineering according to the quantities shown in Forms:

G-321-E Engineering Document Requirements
G-321-VQuality Verification Document Requirements attached to the MR.

11.1 Installation and Handling Documentation

11.1.1 The seller shall provide installation manual/documents IAW 24590-WTP-3PS-G000-T0003.

11.1.2 The seller shall provide site storage and handling manual IAW 24590-WTP-3PS-G000-T0003.

11.2 Vessel Documentation

All Documentation and Submittals pertaining to pressure vessel fabrication shall be submitted IAW 24590-WTP-3PS-MV00-TP001 (See Paragraph 11.5 for vessel welding submittals).

11.3 Piping and Instrumentation Diagrams

11.3.1 Piping and Instrumentation Diagrams (P&IDs) and line size calculations shall be submitted for Buyer's review. Pipe line material number and size shall be identified and selected from specification 24590-WTP-3PS-P000-T0001.

11.4 Electrical

11.4.1 All Documentation and Submittals pertaining to Electrical Components shall be submitted IAW Specifications 24590-WTP-3PS-EKP0-T0001 and 24590-WTP-3PS-MUMI-T0002.

11.5 Instrumentation and Controls

11.5.1 All Documentation and Submittals pertaining to Instrumentation and Controls shall be submitted IAW Specification 24590-WTP-3PS-JQ07-T0001.

11.6 Welding

11.6.1 All Documentation and Submittals pertaining to welding shall be submitted IAW Specifications:

Pressure vessels:

24590-WTP-3PS-MVB2-T0001

Carbon structural steel:

24590-WTP-3PS-SS00-T0001

Structural stainless steel:

24590-WTP-3PS-SS00-T0002

11.6.2 Visual Inspection and Dye Penetrant Examination Records shall be submitted for structural stainless steel work. These records pertain to the examinations required from 24590-WTP-3PS-SS00-T0002.

11.6.3 All Documentation and Submittals for Seller fabricated piping shall be submitted IAW the following specifications 24590-WTP-3PS-NWP0-T0001 and 24590-WTP-3PS-PS02-T0001.

11.7 Performance Test Reports

Functional and Performance tests of all mechanical equipment shall be documented in report format and submitted to the Buyer.

11.8 Equipment Mounting Details

Anchor, attachment, and mounting details for all equipment skid components shall be provided for Buyer's review.

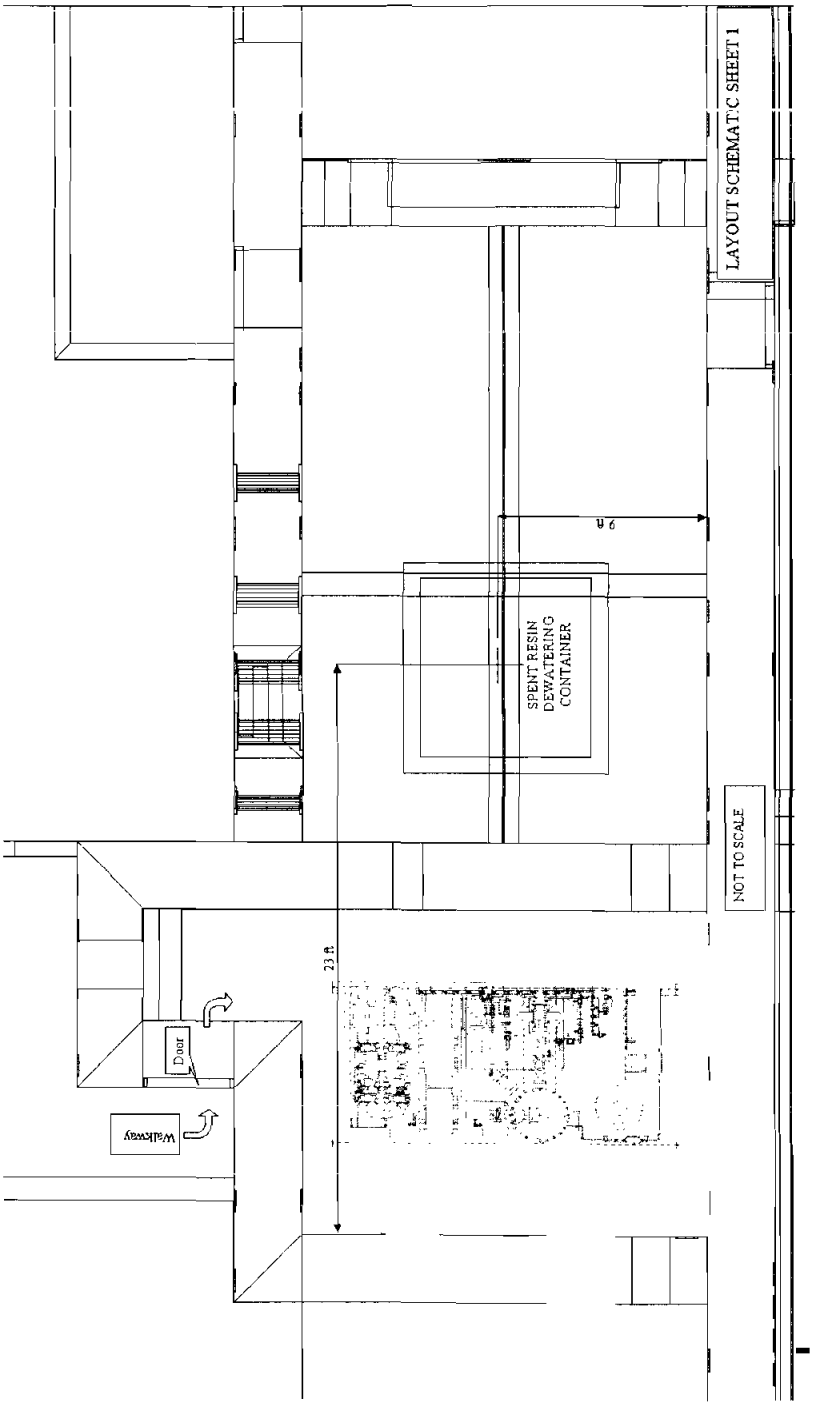

Figure 1: Dewatering Equipment Skid Plan View

DEWATERING EQUIPMENT SKID SIDE VIEW

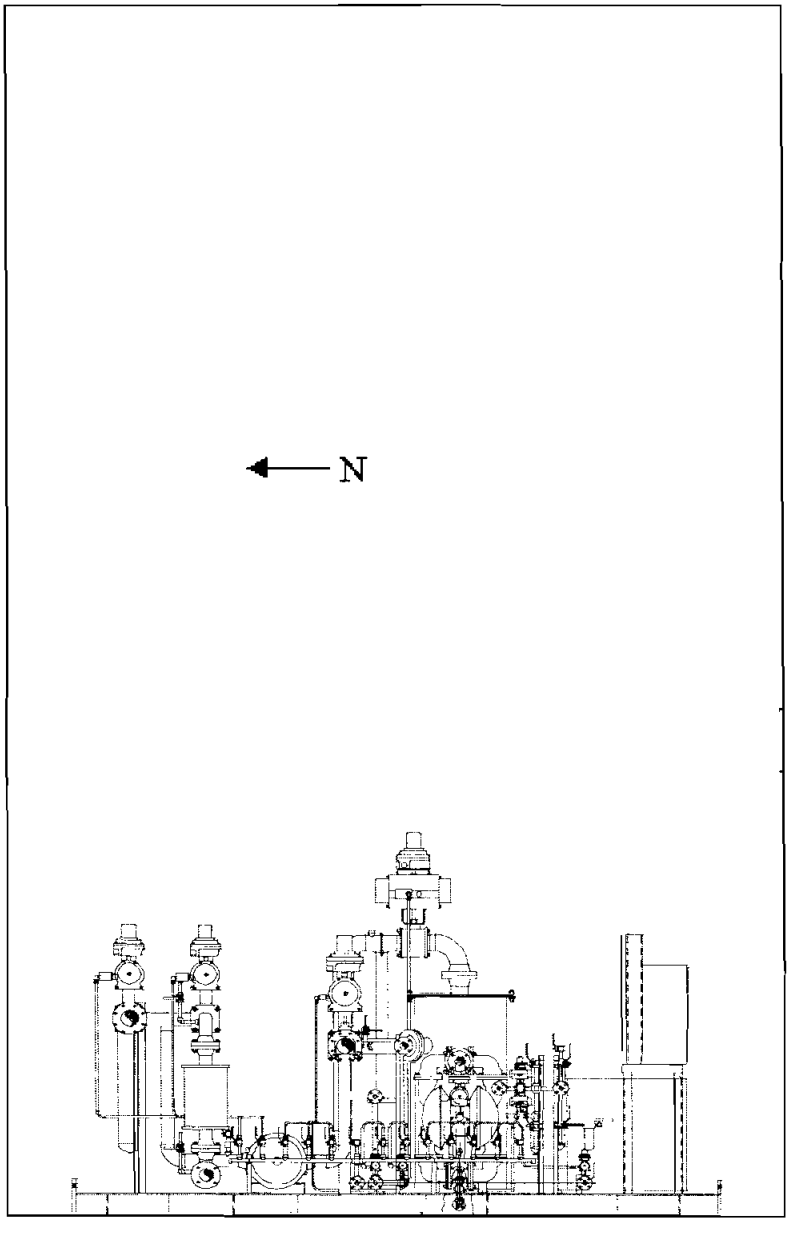

Figure 2: Dewatering Equipment Skid Side View Located in Room P-0119

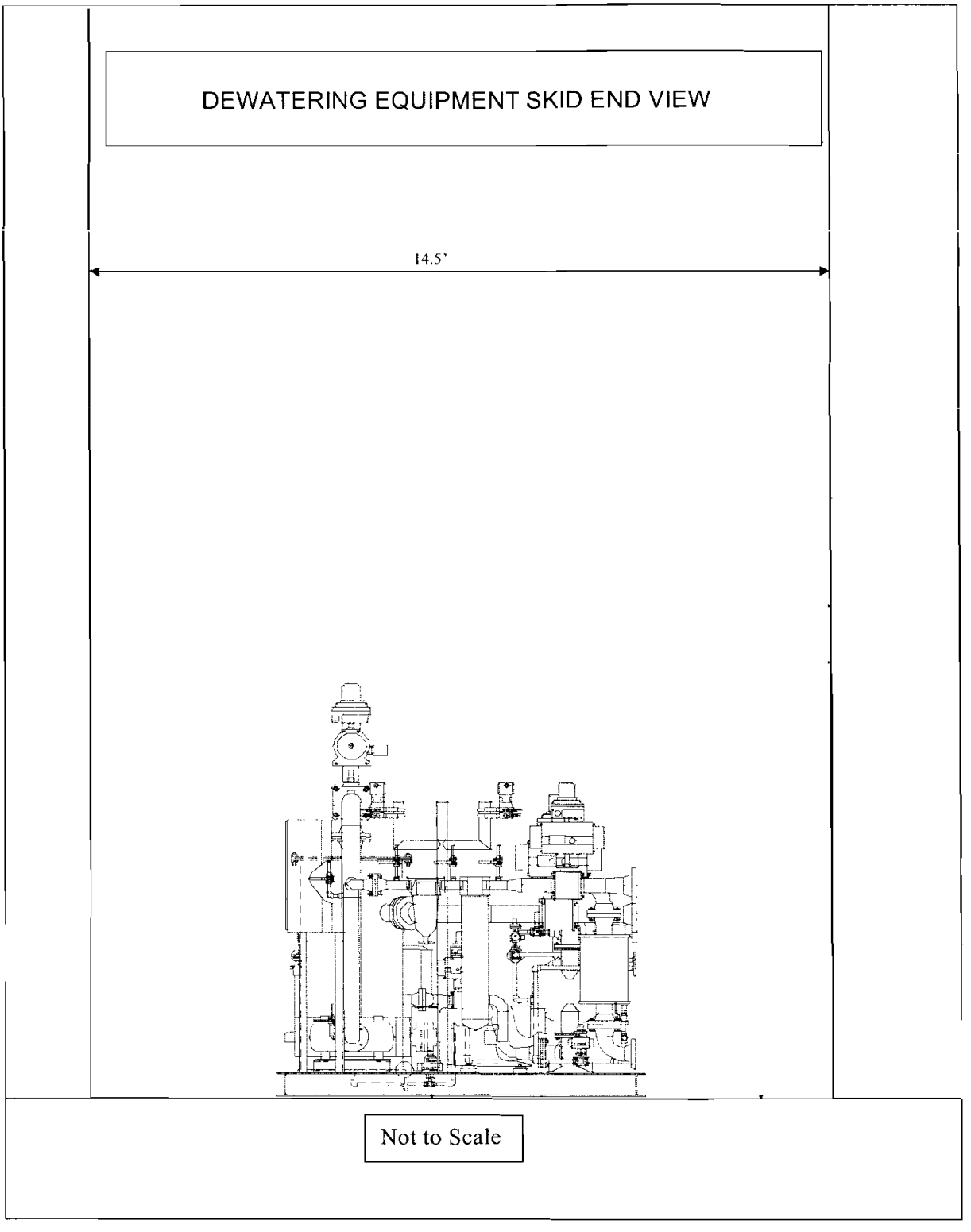

Figure 3: Dewatering Skid Location Along South Wall in Room P-0119

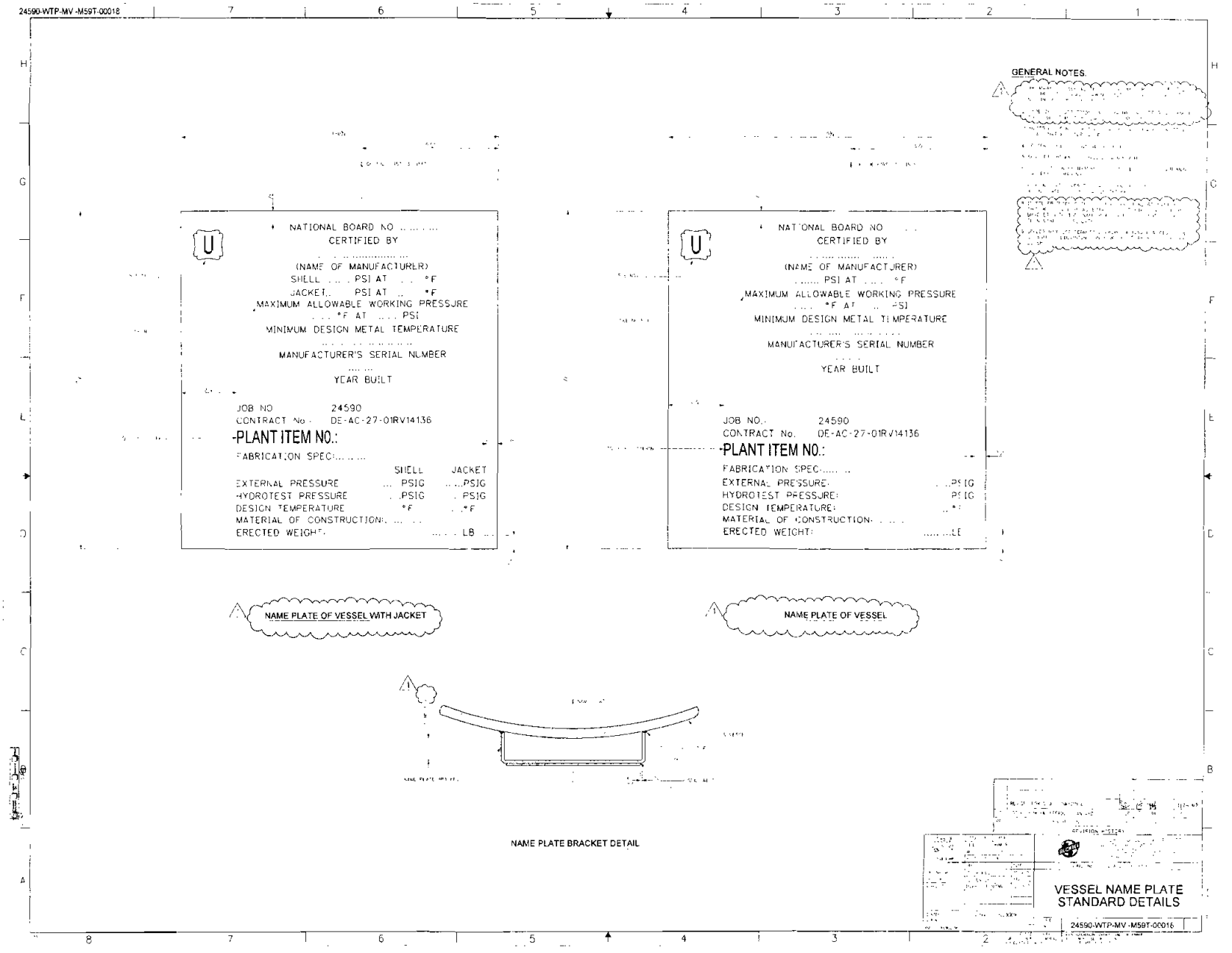

Figure 4: Vessel Name Plate Drawing.

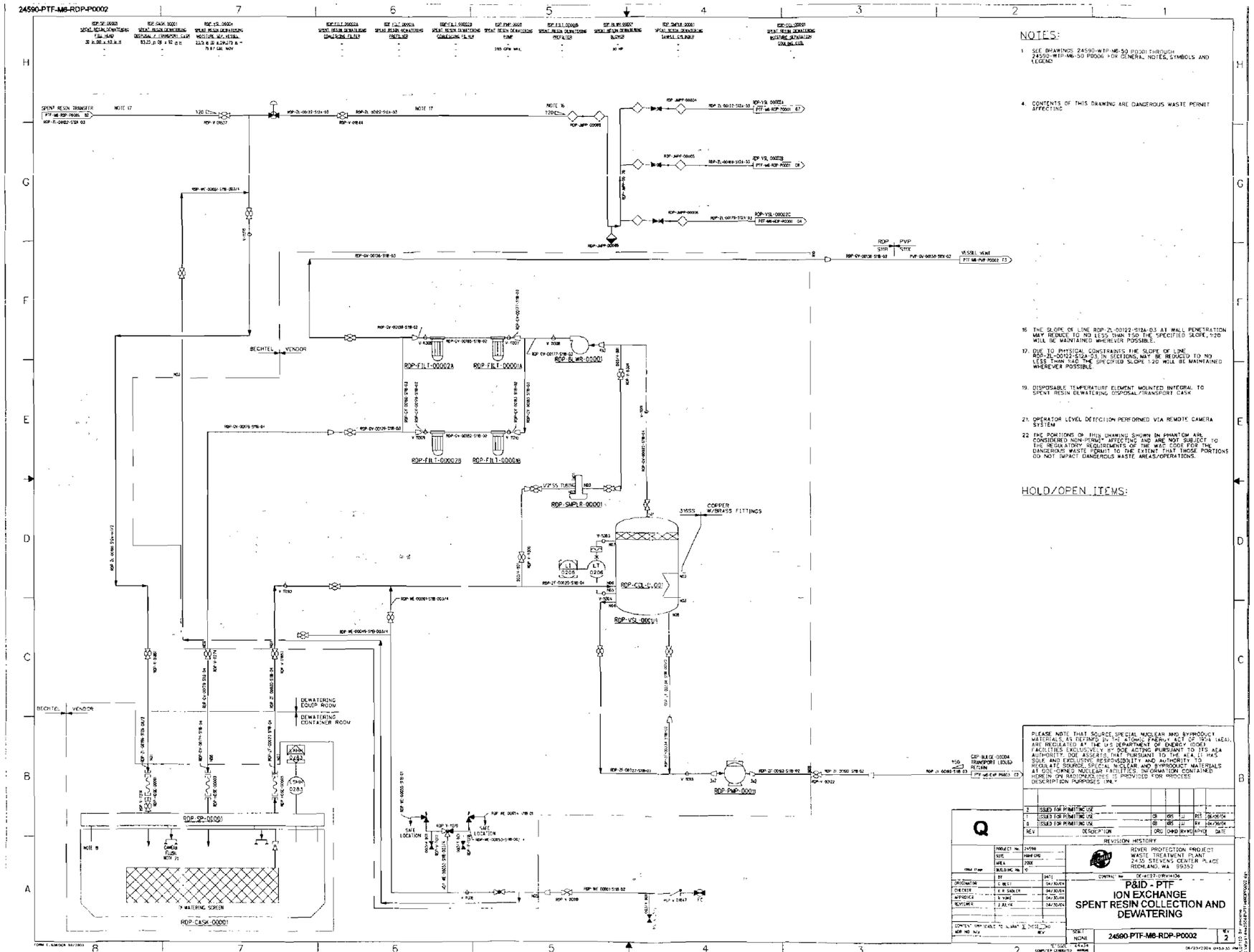

Figure 5: Spend Resin Dewatering P&ID

Appendix A

NOZZLE SCHEDULE

MARK	QTY	SERVICE	SIZE	SCHEDULE	REMARKS	PART NO.
NO1	1	VAPOR OUT (D)	4"	40S	WELD-NECK, 150#	-
NO2	1	REFRIGERATION	1/2"	-	SET TIE-INS	-
NO3	1	REFRIGERATION	1/2"	-	SET TIE-INS	-
NO4	1	LIQUID OUT (B)	2"	40S	WELD-NECK, 150#	-
NO5	1	LEVEL TRANSMITTER	2"	40S	WELD-NECK, 150#	-
NO6	1	INLET	4"	40S	WELD-NECK, 150#	-
NO7	1	LEVEL SWITCH	2"	40S	WELD-NECK, 150#	-
NO8	1	DRAIN	1/2"	40S	-	-
-	-	-	-	-	-	-
-	-	-	-	-	-	-

RDP-VSL-00004 VESSEL DETAILS

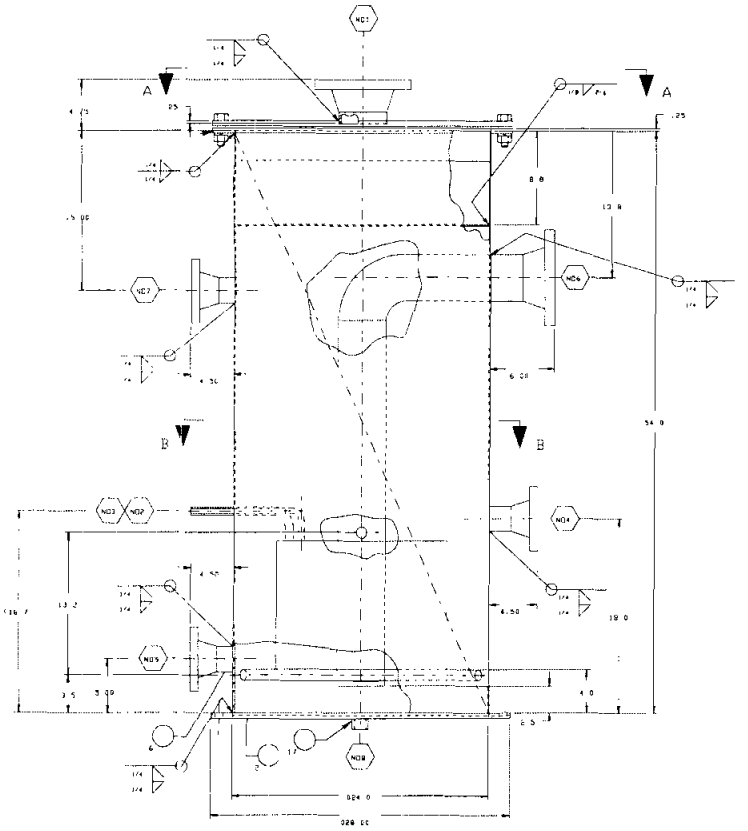

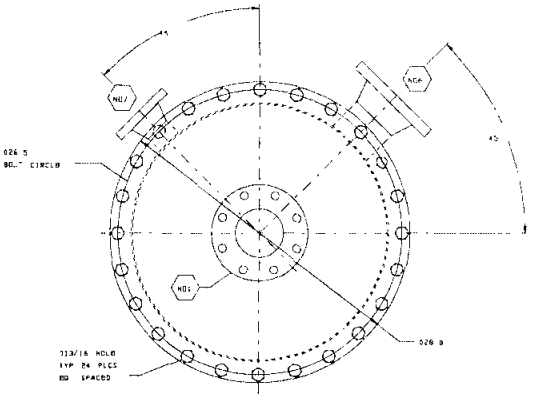

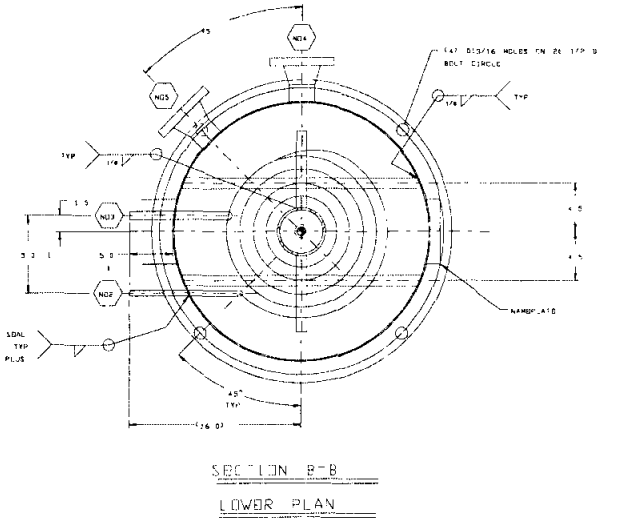

LAYOUT FOR SPENT RESIN DEWATERING ROOM P-121A

Please bear in mind that these sketches are relatively rough with regard to some of the strange lines, features, and alignment that may appear. However, these sketches were extracted from our plant model and are to scale. They show equipment and room features as close to the current design as we have right now. Please contact us if anything is unclear.

The following sheets contain room P-0121A, Spent Resin Dewatering Room where the dewatering container is positioned during the process operation.

The sketches are:

- General Plan view of the Spent Resin Export Path.
- Plan view of the Resin Dewatering Room (P-0121A) including its location with respect to the dewatering room skid to the west.
- Section view of the Resin Dewatering Room looking North.
- Section view of the Resin Dewatering Room looking South
- Section view of the Resin Dewatering Room looking East
- Section view of the Resin Dewatering Room looking West

Notes:
The container/cask shown in the sketches was a concept cask sized at 88" sq. x 100" high. You have provided actual dimensions which have not yet been incorporated into our design.

LOI - Local Operator Interface
MCC - Monorail Crane Control

Following the sketches are some rendered 3D visualizations of the Dewatering room. Important to note, these 3D images are about one year old and do not fully represent the current design in the DW room.

Sometimes we make reference within this layout to only the "container" or only the "cask". It is understood that the empty HIC is added to the shipping cask at the PTF dock and is handled together throughout the dewatering, export, and shipment to disposal process.

This first sketch is a general plan view of the Spent Resin Export Path from the container dewatering room (circled in red) to the loading dock. The empty container/cask and bogie travels west from the loading dock through a rollup door into a corridor. Proceeding west through another rollup door into an airlock. Once the bogie is in the airlock, the rollup door closes and the 10' x 12' shielded airlock door opens. The bogie proceeds through the shielded aperture into the dewatering room, P-0121A.

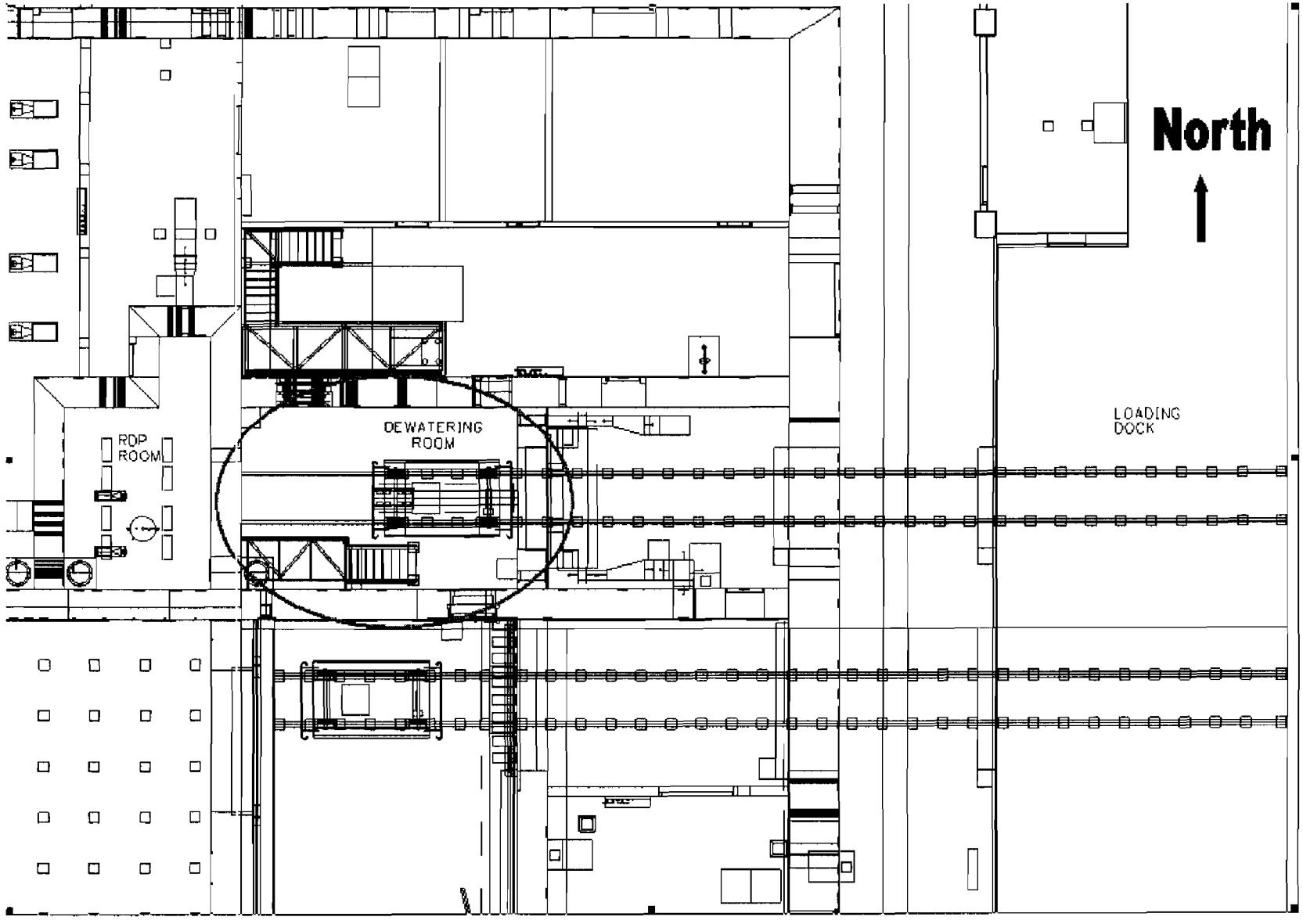

General Plan view of the Spent Resin Export Path

This next sketch shows an expanded view of the dewatering container room (with the bogie – P-0121A) and the dewatering equipment room (P-0119). Room length east to west is 27'-6"; width north to south is 18'-0". The LOI is the Local Operator Interface for remote control and camera monitors outside the room with a shielded viewing window. The MCC is the Monorail Crane Control within the room at the access platform. This control station could potentially allow operation of other equipment from within the room.

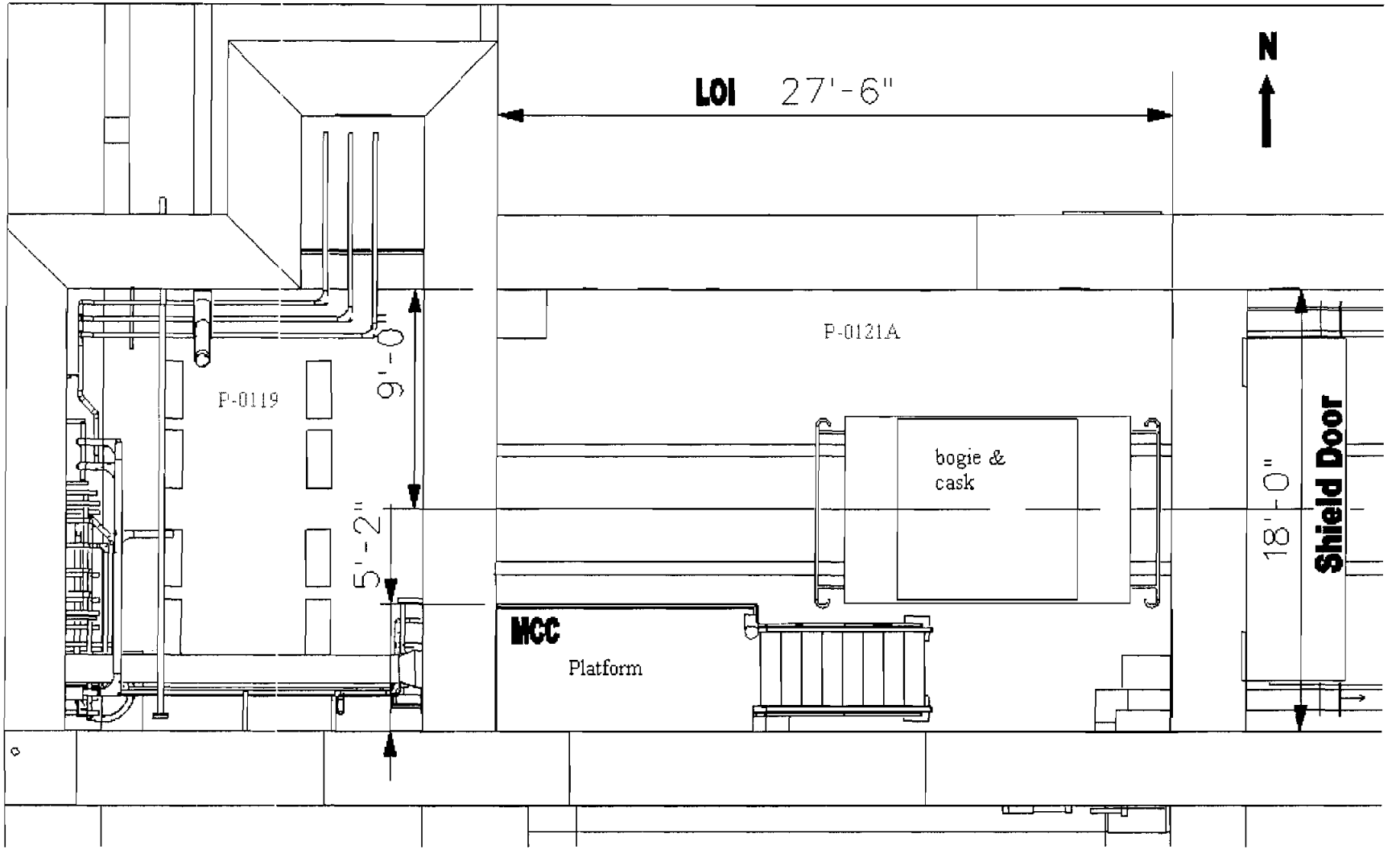

Plan view of the Resin Dewatering Room (P-0121A) including its location with respect to the dewatering room skid to the west

This sketch is a section view looking north showing the cask/container and bogie along with the monorail crane which is centered on the length of room axis Note the high hook height and hook approaches for the monorail. The monorail crane trolley is a concept only and is not portrayed to scale.

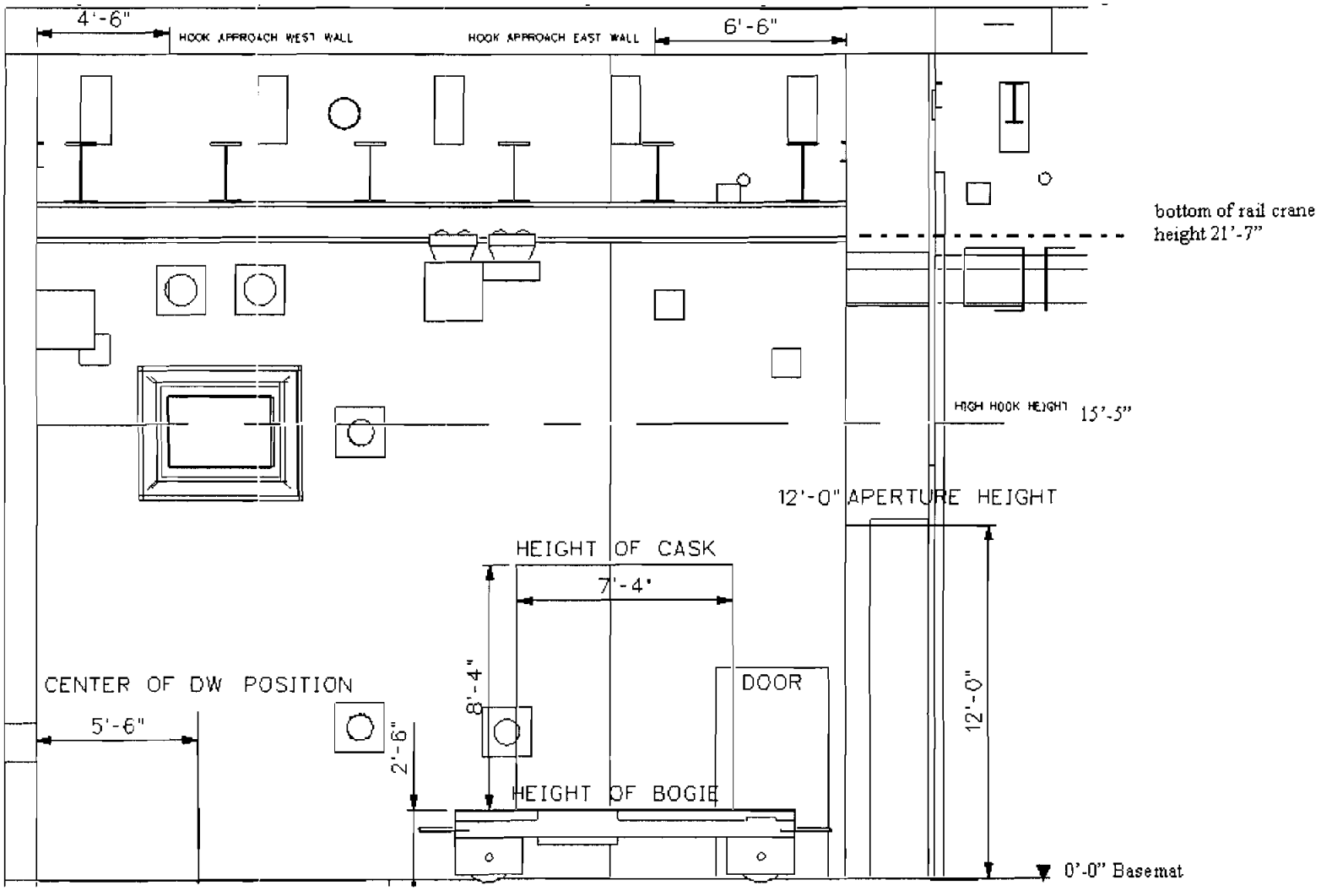

Section view of the Resin Dewatering Room looking North

This sketch is a section view looking south showing the cask/container and bogie along with the monorail crane and the access platform. This sump piping shown enters the room through the west wall and under the platform.

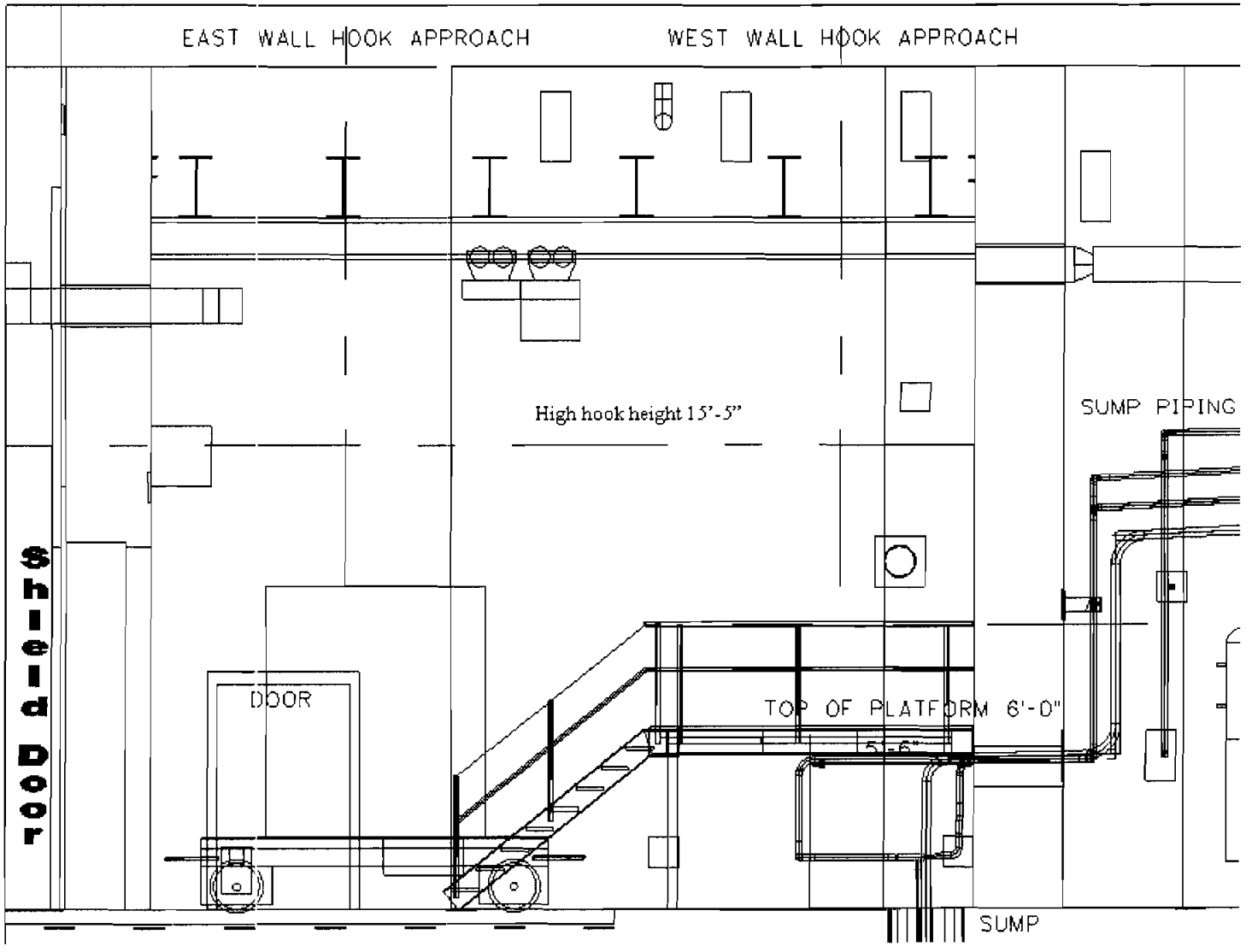

Section view of the Resin Dewatering Room looking South

This sketch is a section. view looking east showing the cask/container and bogie along with the monorail crane which is centered on the length of room axis.

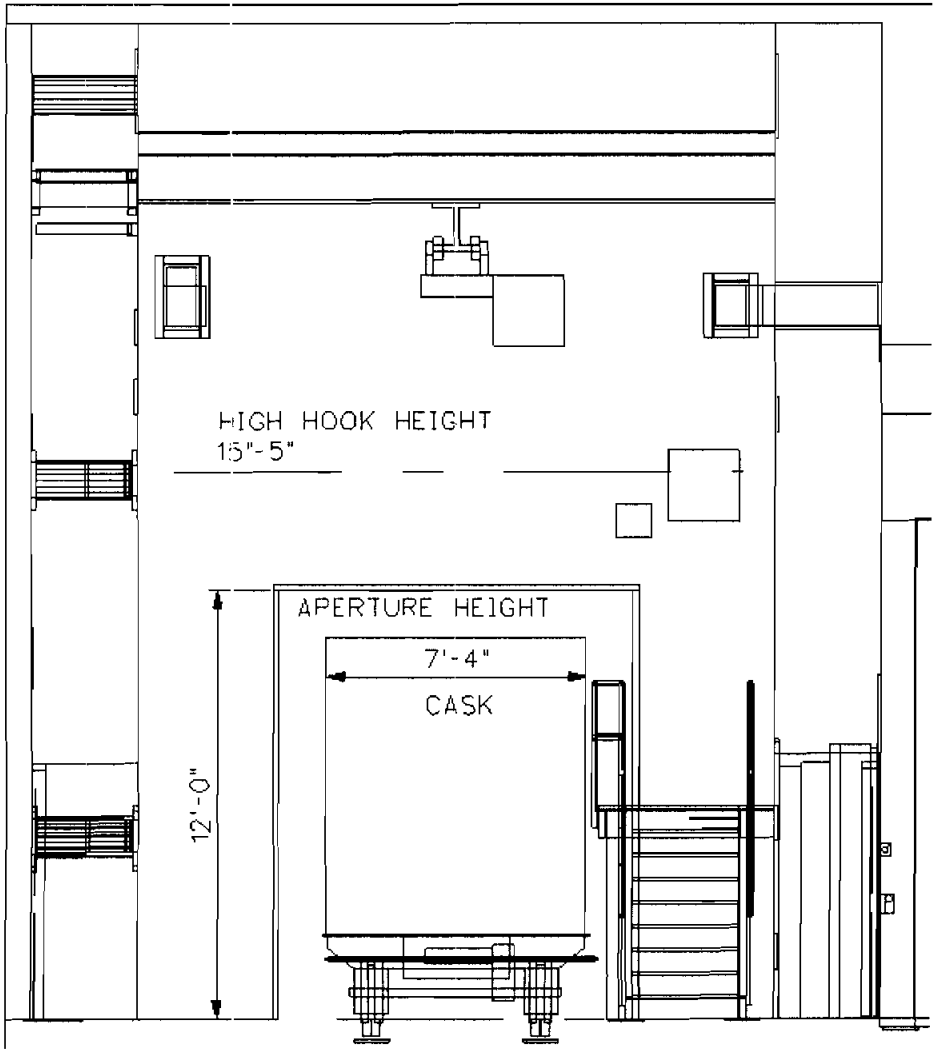

Section view of the Resin Dewatering Room looking East

This sketch is a section view looking west showing the cask/container and bogie along with the monorail crane. Note the wall penetration sleeves for the process lines coming from P-0.19, the DW equipment room. Also shown is the outcell observation and control platform north of the container room.

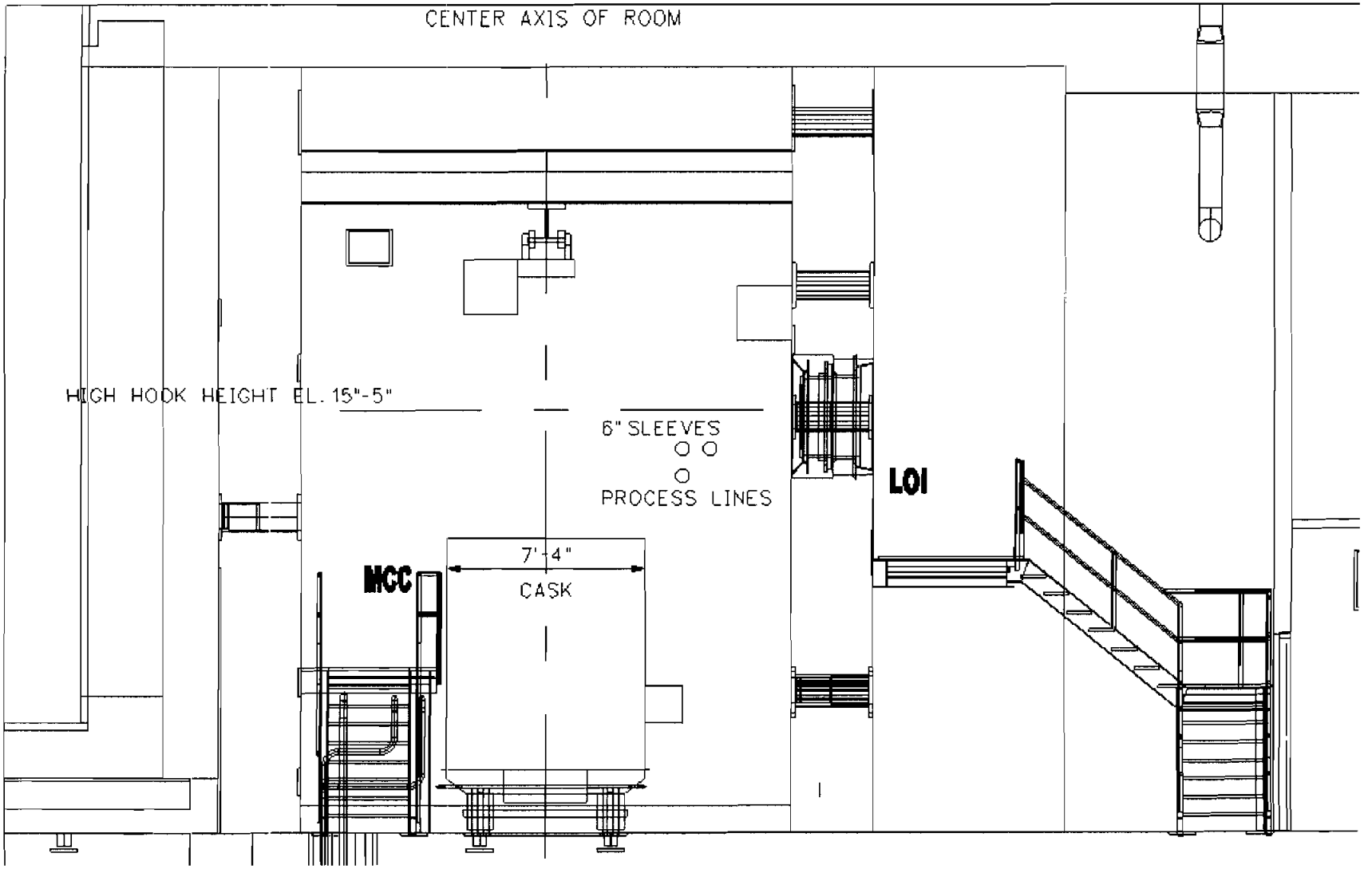

Section view of the Resin Dewatering Room looking West

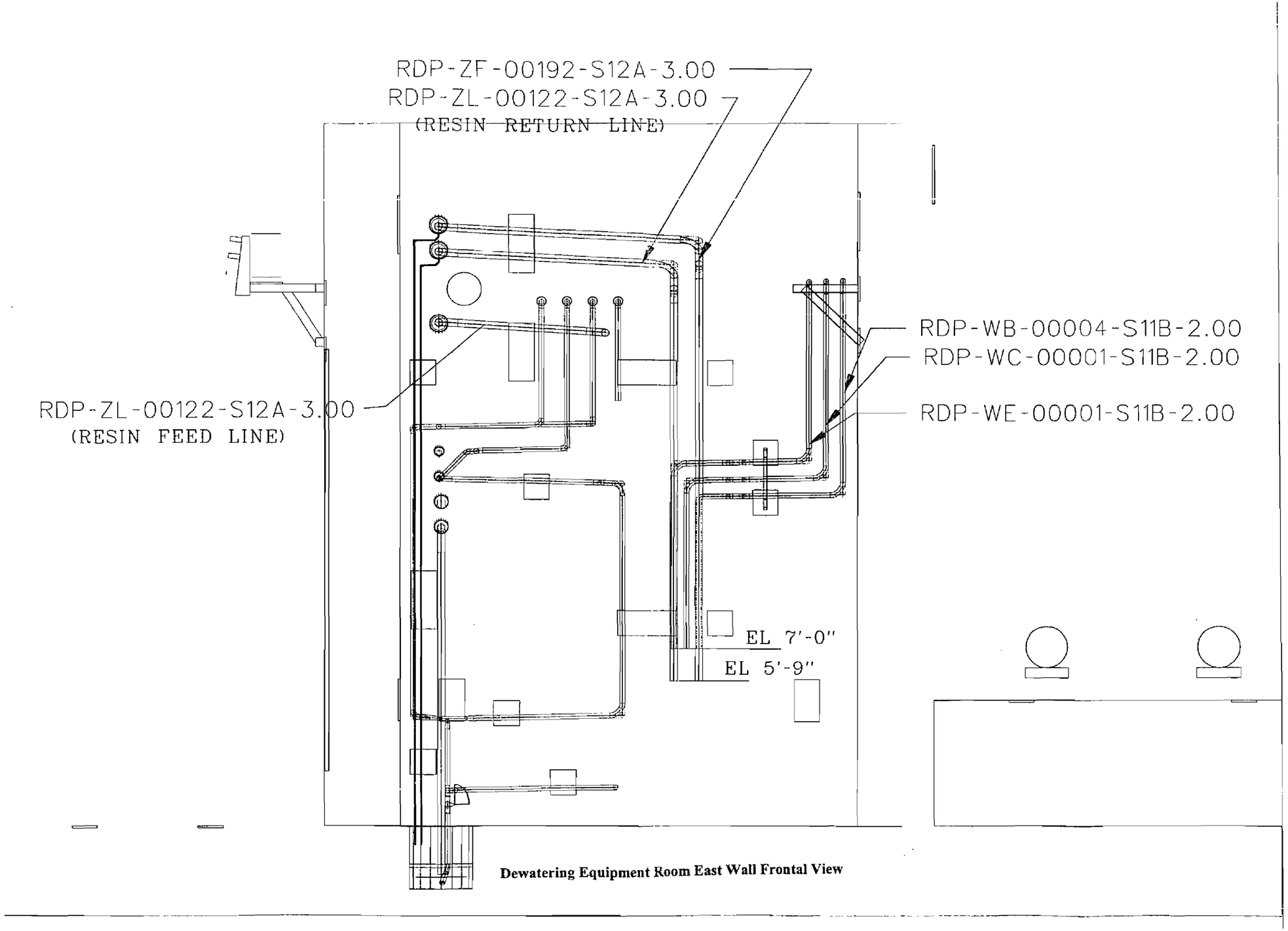

Dewatering Equipment Room East Wall Frontal View

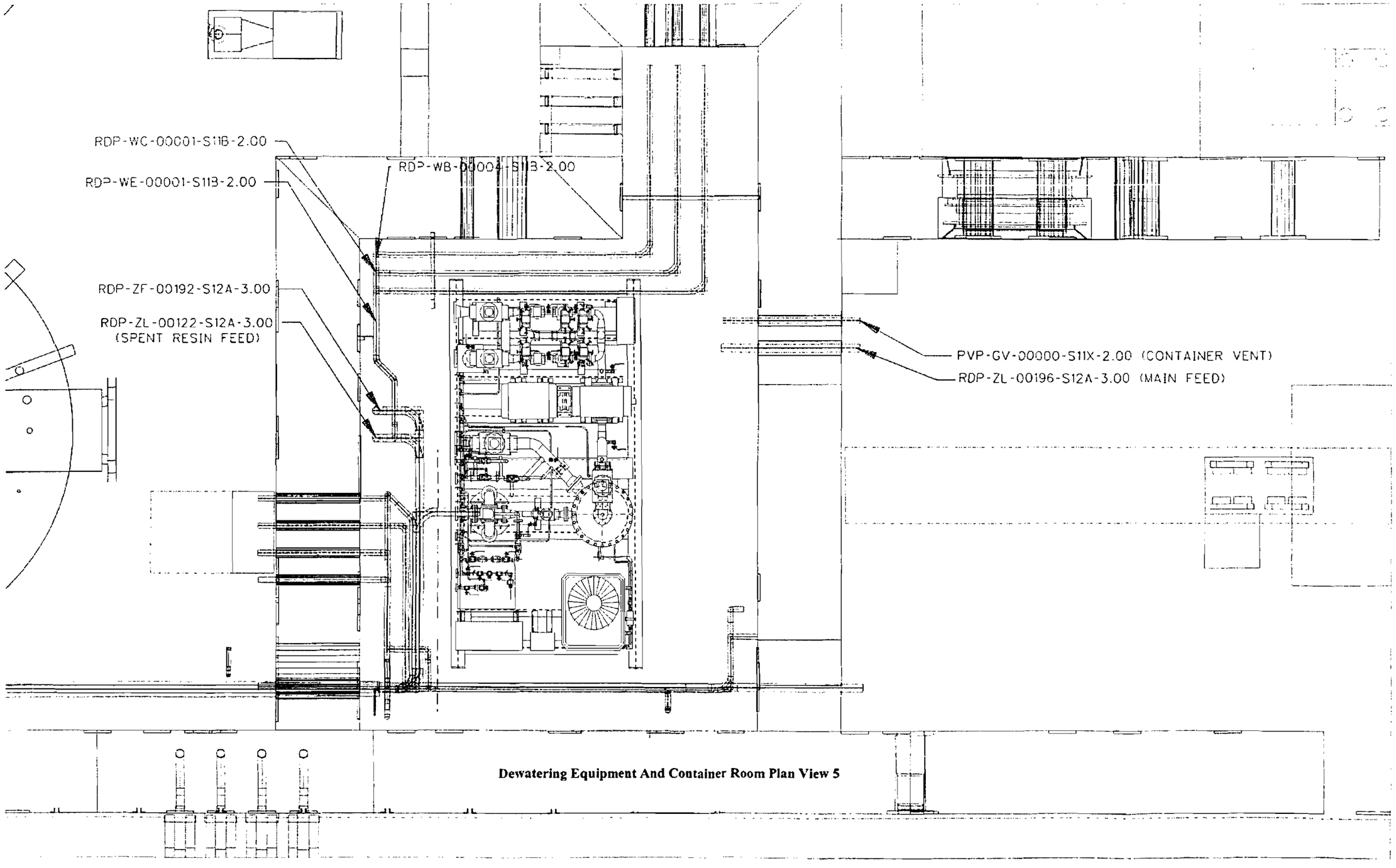

Dewatering Equipment And Container Room Plan View 5

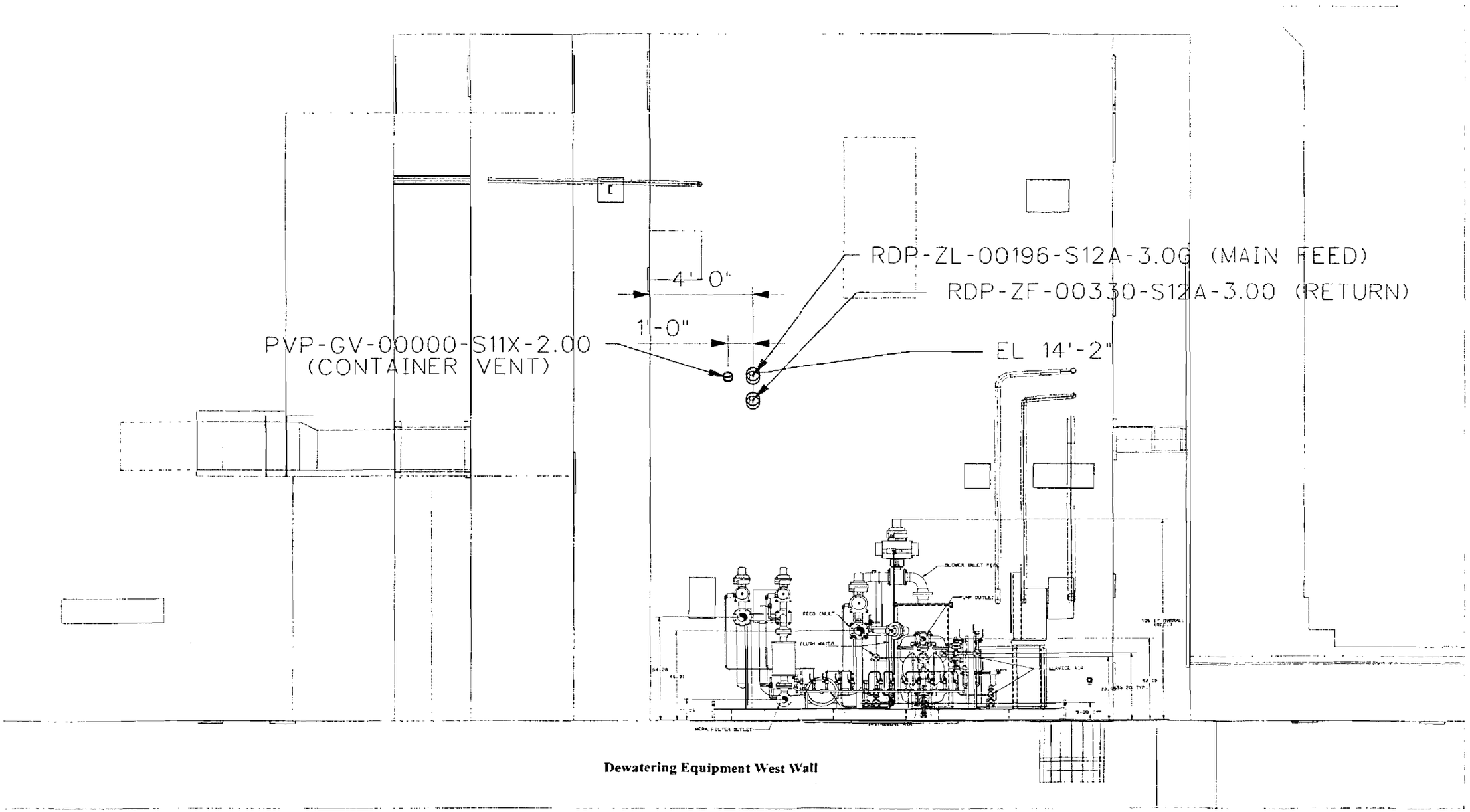

Dewatering Equipment West Wall

ISSUED BY
RPP-WTP PDC
INIT DATE 3/22/04

R10273166

Permit Equivalency Notice

PDC Number:	24590-WTP-PEN-ENV-04-0001		
PEN Title:	Changes to Permit Specification 24590-WTP-3PS-MV00-TP001, Rev. 1, Engineering Specification for Pressure Vessel Design and Fabrication		
Date Prepared:	3/19/2004	Originator:	JE Lesser

Source Document Driving Equivalency Determination (If Applicable)

Source Document Number	Rev	Source Document Name
24590-WTP-3PS-MV00-T0001	1	Engineering Specification for Pressure Vessel Design and Fabrication
24590-WTP-3PN-MV00-00006	-	Specification Change Notice for 24590-WTP-3PS-MV00-T0001, Rev. 1

Affected Permit Information

Permit Number:	WTP Final Dangerous Waste Permit WA7890008967	Revision:	03/12

Permit Equivalence Information

Specific Section(s)/Condition(s) Affected:

24590-WTP-3PS-MV00-TP001, Rev. 1 included in Attachment 51, Appendix 7.7 of the Dangerous Waste Permit.

Description of Substitution/Equivalence: (Attach supplemental information)

Make changes to the identified sections as follows:

Section 1.2.6: Replace definition of Primary Boundary with definition of Primary Confinement as follows:

> Primary Confinement - The boundary within which the process fluids, gasses and vapors are contained and confined during the plant process operation. In this document, the entire process vessel and nozzle walls are generally referred to as the Primary Confinement.

Section 6: Delete "by Quality Level" from the heading.

Add Section 6.5 as follows:

6.5 Additional Requirements for Vessels Located in a Black Cell

6.5.1 If a vessel is locate in a black cell, it shall be noted on the MDS.

6.5.2 All nozzle reinforcement shall be integral regardless of Quality Level. Using additional reinforcing elements, such as reinforcing rings or pads, is prohibited. Reinforcing material shall be taken as excess thickness on the shell or head and nozzle neck. Additional reinforcing material may be provided, when required, by increasing the shell, head or nozzle thickness, or by providing a thicker insert plate of a suitable diameter, butt welded into the shell or the head.

Description of Substitution/Equivalence: (Attach supplemental information)
6.5.3 All welds joining components of the Primary Confinement shall be subject to full volumetric testing. Radiography is the preferred method of volumetric testing. If it is considered impractical to perform radiographic examination, the Seller may propose ultrasonic examinations.
WTP Environmental Permits Lead Approval
Signer: Brad Erlandson (*Print/Type Name*) Brad Erlandson (*Signature*) 3-19-04 (*Date*)

Attachment 51 – Appendix 8.8
Pretreatment Building
Engineering Calculations

Where information regarding treatment, management, and disposal of the radioactive source, byproduct material, and/or special nuclear components of mixed waste (as defined by the Atomic Energy Act of 1954, as amended) has been incorporated into this permit, it is not incorporated for the purpose of regulating the radiation hazards of such components under the authority of this permit and chapter 70.105 RCW. In the event of any conflict between Permit Condition III.10.A. and any statement relating to the regulation of source, special nuclear, and byproduct material contained in portions of the permit application that are incorporated into this permit, Permit Condition III.10.A. will prevail.

Additional appendices will be added to this appendix as new information is incorporated into this permit.

Drawings and Documents

Attachment 51 – Appendix 8.8
Pretreatment Building
Engineering Calculations

The following drawings have been incorporated into Appendix 8.8 and can be viewed at the Ecology Richland Office. **New drawings are in bold lettering.**

Drawing/Document Number	**Description**
24590-PTF-PER-M-02-005, Rev 7	Flooding Volume for PT Facility
24590-PTF-PER-M-03-001, Rev 0	Flooding Volume for 28 Ft Level in PT Facility
24590-PTF-PER-M-04-001, Rev 0	Flooding Volume for 56 Ft Level in PT Facility
24590-PTF-PER-M-04-0003, Rev 0	Flooding Volume for 77 Ft Level in PT Facility
24590-PTF-PER-M-04-0006, Rev 0	Leak Detection for Underground Transfer Lines
24590-PTF-PER-M-04-0008, Rev 1	Flooding Volume for Room P-0150 in PT Facility
RESERVED	RESERVED

R10012622

DOCUMENT INFORMATION

Please complete the following information when submitting a document to PDC.

Correspondence (CCN) No: NA	**Rev: N/A**
Document No: 24590-PTF-PER-M-02-005	**Rev:** 7

Project Information (Check Applicable Box)

- ☐ Balance of Facilities
- ☒ Pretreatment
- ☐ HLW Vitrification
- ☐ LAW Vitrification
- ☐ Analytical
- ☐ External Interfaces
- ☐ Across all areas

Document is applicable to ALARA? ☐ Yes ☒ No

Applicability to ALARA means that the item has the potential to affect doses, contamination levels, or releases to the environment. (See 24590-WTP-GPP-SRAD-002, *Application of ALARA in the Design Process*, sections 4.1 and 4.2 for more information.)

Additional Information for Correspondence

Subject Code(s) _____

Action Item Information. (This section does not apply to Meeting Minutes.)

- ☒ No Action Item within the correspondence
- ☐ Action(s): (Give a brief description of actions in the following space [optional])

_____

Due Date: _____ (If no due date is indicated, a 2-week period will be assigned.)

Action Owed to: _____

Actionee(s)			

This correspondence closes action on Correspondence Number _____

- ☐ Subcontract Files _____ Copies
- ☐ PAAA Coordinator MSII-B
- ☐ Contains SENSITIVE Information

Document title: **Flooding Volume for PT Facility**

Contract number: DE-AC27-01RV14136

Department: Mechanical Systems

Author(s): J. L. Julyk R. E. Stevens

ISSUED BY
RPP-WTP PDC
Dm 3-5-03
INIT DATE

Principal author signature:

Document number: 24590-PTF-PER-M-02-005, Rev 7

Checked by: Paul Aviguetero

Checker signature:

Date of issue: 05 March 2003

Issue status: Issued for Permitting Use

Approved by: S. Grabowski

Approver's position: Area Project Engineering Manager

Approver signature:

Approved by: M. W. Hoffman

Approver's position: Manager (Acting), Mechanical Systems

Approver signature:

MARK W. HOFFMANN
STATE OF WASHINGTON
0030952
REGISTERED
PROFESSIONAL ENGINEER

3/5/03

EXPIRES 12/10/04

This bound document contains a total of 42 sheets

River Protection Project
Waste Treatment Plant
3000 George Washington Way
Richland, WA 99352
United States of America
Tel: 509 371 3500
Fax: 509 371 3504

History Sheet

Rev	Date	Reason for Revision	Revised By
0	7/01/02	Issued for Permitting Use	H. Woodworth
1	8/07/02	Issued for Permitting Use	H. Woodworth/D. C. Pfluger
2	10/08/02	Issued for Permitting Use	K. Chandrasekaran
3	10/14/02	Issued for Permitting Use	K. Chandrasekaran
4	1/22/03	Major Revision, Updated Appendix A and C Added Appendix D and E, Issued for Permitting Use	H. R. Woodworth
5	2/03/03	Major Revision, Issued for Permitting Use	J. L. Julyk/R. E. Stevens
6	2/10/03	Incorporation of Comments, Issued for Permitting Use	J. L. Julyk/R. E. Stevens
7	3/05/03	Incorporation of comments per CCN# 052355, Issued for Permitting Use	J. L. Julyk/ R. E. Stevens

Contents

1 Introduction 1
2 Applicable Documents 1
3 Description 1
3.1 Flooding Volume for -45 ft, 0 in. Elevation Pit 2
3.2 Flooding Volume for -19 ft, 0 in. Elevation Pit 2
3.3 Flooding Volume for 0 ft, 0 in. Elevation 3

Appendices

Appendix A Flood Volume Calculation for PT Pit at -45 ft, 0 in. Elevation A-1
Appendix B Flood Volume Calculation for PT Pit at -19 ft, 0 in. Elevation B-1
Appendix C Flood Volume Calculation for PT (Hot Cell and Black Cells) at 0 ft, 0 in. Elevation C-1
Appendix D Flood Volume Calculation for PT (Room P-0118) at 0 ft, 0 in. Elevation D-1
Appendix E Flood Volume Calculation for PT (Rooms P-0105, P-0105A, P-0105B, and P-0105C) at 0 ft, 0 in. Elevation E-1

1 Introduction

The Washington Administrative Code [WAC 173-303-640(4)(e)] addresses tank systems containing dangerous waste. This code requires that secondary containment systems must be designed to contain 100 % of the capacity of the largest tank within its boundary. Also included in this report is the containment of the fire water discharge, where applicable, within the boundary of the secondary containment.

This report specifically addresses flooding scenarios to be contained within the pretreatment (PT) facility for elevation 0 ft, 0 in. and below and establishes the minimum requirements for secondary containment.

2 Applicable Documents

WAC 173-303. *Dangerous Waste Regulations*. Washington Administrative Code.

3 Description

The PT facility receives low-activity waste (LAW) and high-level waste (HLW) from the Hanford tank farms contractor (TFC). The TFC currently maintains mixed waste for the US Department of Energy (DOE). These wastes are stored in underground storage tanks at the Hanford Site.

The purpose of the PT facility is to prepare the waste received from the TFC and transfer it to the LAW and the HLW vitrification facilities. Within the LAW and HLW vitrification facilities the waste is formed into glass logs for final long-term disposal.

LAW and HLW are pumped through double-walled underground transfer lines to the PT facility. Within the PT facility, the LAW feed is transferred to the waste feed receipt (FRP) vessels (FRP-VSL-00002A/B/C/D), while the HLW feed is sent to the HLW feed receipt vessel (HLP-VSL-00022). These wastes are temporarily stored in the vessels before being pumped and treated by the PT processing equipment.

These vessels are located in "black cells" and are not accessible. The black cells are arranged in a "U" shape around a central "hot cell" in the PT facility, where major processing equipment is located.

The hot cell is remotely maintainable with the use of a crane system. Below the center of the hot cell are 2 adjacent rooms in the deep pit at the -45 ft, 0 in. elevation. This is the low point for the PT facility. Within these rooms are the plant wash and disposal (PWD) ultimate overflow vessel (PWD-VSL-00033) and the HLW effluent transfer vessel (PWD-VSL-00043).

The FRP vessels are the largest in the PT facility. The flood scenario addresses a postulated failure of 1 FRP vessel and the movement of its fluid from a black cell to the hot cell, and then to the -45 ft, 0 in. elevation pit. The flooding scenario also addresses the fire water pit at the -19 ft, 0 in. elevation and areas at the 0 ft, 0 in. elevation, as required, for secondary containment.

3.1 Flooding Volume for -45 ft, 0 in. Elevation Pit

There are 2 rooms at the -45 ft, 0 in. elevation pit; 1 room contains the PWD ultimate overflow vessel and 1 room contains the HLW effluent transfer vessel. Each vessel has a total volume of 5,567 ft^3 and a maximum operating volume of 3,954 ft^3(see Appendix A, section 2). The combined available flood volume of these 2 rooms below the pipe tunnel at the -21 ft, 0 in. elevation is 72,107 ft^3 (see Appendix A, section 7.1). The rooms are hydraulically connected by a 3 ft wide by 8 ft, 6 in. high opening. The 2 vessels are assumed to be full, up to the overflow line, at the time of the postulated flood scenario.

The flood scenario assessed is the postulated failure of a process line in a black cell, allowing material to flow into the hot cell from 1 FRP vessel at the 0 ft, 0 in. elevation. The total volume of 1 FRP vessel is 63,361 ft^3 (see Appendix A, section 2). The entire contents of 1 FRP vessel is assumed to flow into the hot cell, and to travel to a collection drain system. The quantity of liquid retained on the black cell and hot cell floors is ignored for conservatism. The slope of the hot cell floor and drain system divert the waste into the PWD ultimate overflow vessel and the HLW effluent transfer vessel. The volume available to contain the flood in the pit was adjusted to compensate for vessel volumes, grout (used to slope the cell floor), hydraulic connections, submerged equipment, and structures.

The -45 ft, 0 in. elevation rooms interface with 2 piping tunnels: a south tunnel, P-B001 and P-B001A, at the -21 ft, 0 in. elevation; and a north tunnel, P-B004, at the -18 ft, 0 in. elevation. The tunnels provide piping access from the underground transfer lines into the PT facility. The underground piping consists of a series of pipes, each with 2 concentric pipes providing primary and secondary containment. This double-walled pipe ends 1 ft inside the tunnel. Each tunnel is sloped (1 % grade) back to the pit at the -45 ft, 0 in. elevation. The tunnels are not within the secondary containment boundary for the flood scenario, and therefore no volume calculation is required for the tunnels.

Based on the volume available to contain the flood in the pit (72,107 ft^3) and the maximum postulated flood volume (63,361 ft^3), the recommended liner height is 23 ft, 0 in. ht. above top of concrete (see Appendix A, section 7.4).

To accommodate secondary containment of the piping tunnels and the -45 ft, 0 in. elevation pit (rooms P-B002 and P-B003), the stainless steel liner extends up to the tunnel openings. For further details refer to Appendix A.

3.2 Flooding Volume for -19 ft, 0 in. Elevation Pit

The C2 floor drain collection vessel (PWD-VSL-00045) and the C3 floor drain collection vessel (PWD-VSL-00046) each contain a volume of 666 ft^3 (see Appendix B, section 7), and are located in the pit at the -19 ft, 0 in. elevation. The available volume in the pit is approximately 18,026 ft^3 (see Appendix B, Figure B-1).

Flooding volume is calculated from fire water, since it represents a larger volume than either of the vessels in the pit. The drain collection vessels are assumed to be full at the time of a fire. A total of 4,679 ft^3 (see Appendix B, Figure B-1) of fire fighting water would flow into the pit, after overflowing from either of the C2 or C3 drain vessels. A fire fighting sprinkler duration of 30 minutes is used. A flooding volume of 4,679 ft^3 requires a minimum liner height of 4.5 ft (54 in.). The flood volume was adjusted to compensate for vessel volumes, submerged equipment, and structures. For further details refer to Appendix B.

3.3 Flooding Volume for 0 ft, 0 in. Elevation

3.3.1 Black Cells and Hot Cell

The black cells and hot cell are located at the 0 ft, 0 in. elevation and are identified on the PT facility general arrangement drawings. The black cells are located around the hot cell and provide enclosure for mixed waste vessels. Hydraulic connections between black cells, and between selected black cells and the hot cell, are used to cascade flow between cells once the black cell holdup volume is exceeded. The black cell floors and lower portions of the walls have stainless steel liners to provide secondary containment.

In order to evaluate the required liner height, a maximum proposed leak rate was established. The maximum leak rate scenario is the failure of the largest nozzle at the lowest point on the largest vessel in a containment area. Under this condition, the calculated leak rate is 885 gallons per minute (gpm) at the moment of the break (see Appendix C, section 7.1). As the level of the tank decreases, the leak rate decreases markedly. However, for conservatism, the peak flow rate is assumed throughout this scenario.

The calculated leak flow rate of 885 gpm will flow from one black cell to the next cell and finally into the hot cell. As the liquid level cascades from cell to cell, a liquid level differential occurs between the cells such that the flow of 885 gpm is maintained. This liquid differential is due to head losses through the hydraulic connections. The liquid level in the hot cell is lower than the level in the preceding black cells. To accommodate the maximum flow rate, each black cell-to-black cell and the black cell-to-hot cell hydraulic connections are provided with four 6 in. diameter pipes (see Appendix C, Figure C-3). The highest liquid level in the cells determines the height of the liner. Therefore, the top of the liner is at 2 ft, 1 in. (25 in.) elevation for both the hot cell and the black cells.

Each black cell is provided with a level detection sump and an emptying ejector. Fluids from all black cell sumps are pumped by a steam ejector into the plant wash vessel (PWD-VSL-00044) located at the 0 ft, 0 in. elevation.

The black cell floor liner is sloped toward several low-point sumps with level detection and steam ejectors. These ejectors discharge into the PWD plant wash vessel. There are 4 access openings from the hot cell floor into the -45 ft, 0 in. elevation. Around the perimeter of the hot cell access opening to the pit is a curb and gutter arrangement. Drain lines in the curbs around the access openings allow liquid to drain from the hot cell floor into the PWD ultimate overflow vessel. The top of the liner is at 2 ft, 1 in. (25 in.) elevation. The curb height around the opening in the hot cell floor also is at 2 ft, 1 in. (25 in.) elevation.

The maximum postulated flood considered is the total volume of 1 FRP vessel (63,361 ft^3) released to the associated black cell. After the liquid fills the cell, to the bottom of the hydraulic connections, it flows to the adjacent black cells and the hot cell. The liquid level in the hot cell, after reaching the top of the curb and gutter, cascades through the drain lines in the curbs around the access openings into the HLW effluent transfer vessel. Once the HLW effluent transfer vessel is full, liquid will flow into the PWD ultimate overflow vessel through the common overflow line between the vessels. With both vessels full, the liquid overflows into the pit. For further details refer to Appendices A and C.

3.3.2 Room P-0118

Room P-0118 is located in the northeast quadrant of the PT facility at elevation 0 ft, 0 in. It contains 3 vessels and associated pumps. The 3 vessels are the radioactive liquid waste disposal (RLD) alkaline

effluent vessels (RLD-VSL-00017A/B) and the treated LAW evaporation process (TLP) condensate vessel (TLP-VSL-00002).

A stainless steel liner provides secondary containment to accommodate the total volume of the largest vessel (5,741 ft^3; see Appendix D, section 2) in the area, plus 20 minutes of fire sprinkler water. The liner height is 66 in. (5 ft, 6 in.) above the floor.

Sump PWD-SUMP-00036, which is provided with a level detection instrument and an emptying ejector to remove the contained liquid, is located in room P-0118. Fluid released or spilled into the room is detected in the low-point sump and pumped by an ejector to the PWD plant wash vessel, via a breakpot. The sump is located in the southeast corner of room P-0118. For further details refer to Appendix D.

3.3.3 Rooms P-0105, P-0105A, P-0105B, and P-0105C

Rooms P-0105, P-0105A, P-0105B, and P-0105C are located in the southwest quadrant of the PT facility and contain 1 waste feed evaporation process (FEP) condensate vessel (FEP-VSL-00005), a bulge, and various equipment. The area is composed of 4 connected rooms bordered by the black cells on one side and the corridor on the other side. Floor drains are provided to move any release or spill into the C3 floor drain collection vessel, located at the -19 ft, 0 in. elevation.

The postulated flood volume, for this containment area, is the total volume of the FEP vessel plus 20 minutes of fire sprinkler water. A curb has been provided between this containment area, the PC0101 corridor, room P-0107, and room P-0103. The floor and the curbing of the rooms are lined with an appropriate special protective coating to a minimum height of 3 in. For further details refer to Appendix E.

Appendix A

Flood Volume Calculation for PT Pit at -45 ft, 0 in. Elevation

1 Objective

Determine the liner elevation for rooms P-B001, P-B001A, P-B002, P-B003, and P-B004 in the pretreatment (PT) facility.

2 Inputs

The following inputs are used in the determination of the liner elevation for rooms P-B001, P-B001A, P-B002, P-B003, and P-B004.

- Total volume of 1 FRP vessel (FRP-VSL-00002A) is equal to 474,000 gallons (63,361 ft^3).
- Total volume of each of the PWD ultimate overflow and HLW effluent transfer vessels (PWD-VSL-00033 and PWD-VSL-00043) is equal to 41,650 gallons (5,567 ft^3). The maximum operating volume (MOV), or volume below the overflow level for each of the vessels is 29,580 gallons (3,954 ft^3).

Dimensions and details of the building.

- The dimensions of rooms P-B002 and P-B003 are 35.5 ft by 49 ft and 35.5 ft by 49 ft, respectively.
- The available volume is the space from the -45 ft, 0 in. elevation pit floor to the -21 ft, 0 in. elevation tunnel.
- The hydraulic opening connecting rooms P-B002 and P-B003 is 3 ft wide by 8 ft, 6 in. high in a 6 ft thick wall separating the 2 rooms.

3 Background

The black cells consist of the following rooms: P-0102, P-0102A, P-0104, P-0106, P-0108, P-0108A, P-0108B, P-0108C, P-0109, P-0111, P-0112, P-0113, P-0114, P-0117, and P-0117A.

The hot cell consists of only 1 room: P-0123.

The -45 ft, 0 in. elevation pit consists of rooms P-B002 and P-B003. Connecting to rooms P-B002 and P-B003 are 2 pipe tunnels. The south tunnel (rooms P-B001 and P-B001A) is located at the -21 ft, 0 in. elevation while the north tunnel (room P-B004) is located at the -18 ft, 0 in. elevation.

The secondary containment in the PT facility is designed and operated to contain 100 percent of the capacity of the largest tank within its boundary. This calculation determines the flood volume and

assesses the effects on the PT facility. The liner height for rooms P-B001, P-B001A, P-B002, P-B003, and P-B004 is based on the calculated flood volumes.

The flood scenario assumes the total volume of 1 FRP vessel is released into 1 of the black cells. The postulated flood volume is determined by using the total volume (volume of the shell and both heads) for the largest vessel (FRP-VSL-00002A) in the containment area.

Hydraulic openings between the black cells and the hot cell allow the flood to move into the hot cell and travel to the -45 ft, 0 in. elevation pit.

A curb and gutter arrangement is provided in the hot cell that will allow liquid to move from the floor of the hot cell to the PWD vessels in the –45 ft, 0 in. elevation pit.

The flood travels from the black cells, into the hot cell, through the curb and gutter collection system, and into the HLW effluent transfer vessel (PWD-VSL-00043). Once the capacity of the vessel is reached, an overflow line allows the flood to move into the PWD ultimate overflow vessel (PWD-VSL-00033). When the maximum operating volume (MOV) of both vessels is reached, an overflow line directs the flood into rooms P-B002 and P-B003, where a sump and leak detection system are located. The full volume is assumed to move into rooms P-B002 and P-B003.

The tunnels provide containment for the waste transfer lines that are routed through the tunnels. These tunnels are sloped to the pit at a 1 % grade and are provided with stainless steel floor and wall lining for containment of leaks and spills.

4 Applicable Codes and Standards

- WAC 173-303. *Dangerous Waste Regulations.* Washington Administrative Code.
- UBC 1997. *Uniform Building Code,* International Conference of Building Officials, Whittier, California, USA.

5 Methodology

In order to calculate the liner elevations the following is determined:

1 The area and available volume for rooms P-B002 and P-B003.
2 The volume of the maximum postulated flood.
3 The depth of the maximum postulated flood in rooms P-B002 and P-B003.
4 The minimum liner height for rooms P-B002 and P-B003 from the depth of the maximum postulated flood.
5 The liner height for the pipe tunnels (rooms P-B001, P-B001A, and P-B004).

6 Assumptions

6.1 Assumptions Not Requiring Verification

- The postulated flood is the total volume (63,361 ft^3) for 1 of the FRP vessels (FRP-VSL-00002A).

- It is assumed that, at the time of the postulated flood, the 2 vessels (PWD-VSL-00033 and PWD-VSL-00043) in the -45 ft, 0 in. elevation pit are full up to the MOV.

6.2 Assumptions to be Verified

- Associated equipment, vessel shells, piping, and supports are estimated to displace 1 % of the postulated flood volume.

7 Calculations

7.1 Determine the Area and Available Volume of Rooms P-B002 and P-B003

The total combined area for rooms P-B002 and P-B003 is:

(35.5 ft × 49 ft) + (35.5 ft × 49 ft) = 3,479 ft^2.

The available height, at top of concrete, is:

(-21 ft, 0 in. el.) - (-45 ft, 0 in. el.) = 24 ft.

The volume of the connection opening between P-B002 and P-B003 (see Figure A-2) is:

3 ft × 8.5 ft × 6 ft = 153 ft^3.

The volume of the grout in the pit (see Figure A-2) is conservatively calculated as 2,760 ft^3. This is rounded up to 3,000 ft^3 (Note: This volume is not available for containment).

The displaced volume of submerged piping, vessel shells, supports, and equipment (1 % of the postulated flood volume of 63,361 ft^3) is 634 ft^3.

The maximum operating volume (MOV), or volume below the overflow level for each of the PWD vessels, is 3,954 ft^3. There are 2 vessels (PWD-VSL-00033 and PWD-VSL-00043).

The total available volume in rooms P-B002 and P-B003 below the -21 ft, 0 in. el. pipe tunnel is calculated by taking the combined area of rooms P-B002 and P-B003 multiplied by the available height to the tunnel, plus the volume of the connection opening, minus the grout volume, minus the displaced volume of submerged equipment, minus the maximum operating volume for the 2 vessels. This is calculated as:

(3,479 ft^2 × 24 ft) + 153 ft^3 - 3,000 ft^3 - 634 ft^3 – (2 × 3, 954 ft^3) = 72,107 ft^3.

7.2 Determine the Volume of the Maximum Postulated Flood

The maximum postulated flood volume is the total volume of 1 FRP vessel (FRP-VSL-0002A). This is:

63,361 ft^3.

7.3 Determine the Height of the Maximum Postulated Flood in Rooms P-B002 and P-B003

The differential volume between the total available volume and flood volume is:

(72,107 ft^3 - 63,361 ft^3) = 8,746 ft^3.

The differential height between the total available volume and the flood volume is:

(8,746 ft^3/3,479 ft^2) = 2 ft, 6 in. differential ht.

The flood elevation is:

(-21 ft, 0 in. el. - 2 ft, 6 in. differential ht.) = -23 ft, 6 in. el.

Therefore, the height of the maximum postulated flood, above top of concrete is:

(-23 ft, 6 in. el.) - (-45 ft, 0 in. el.) = 21 ft, 6 in. ht.

7.4 Determine the Liner Height for Rooms P-B002 and P-B003

The flood elevation is -23 ft., 6 in. el. For conservatism, it is recommended the liner elevation be -22 ft, 0 in. el. (liner height of 23 ft, 0 in. ht. above top of concrete). In addition, where the pit and tunnels interface, the pit liner will extend beyond this recommended height and join with the tunnel liners.

7.5 Determine the Recommended Liner Height for Rooms P-B001, P-B001A, and P-B004

The postulated flood level does not reach the pipe tunnel at the -21 ft, 0 in. elevation. Double containment of the transfer lines, located in the pipe tunnel, ends 1 ft into the building and single walled lines extend throughout the remainder of the tunnels and pit. As a result, secondary containment for leaks and spills from these lines is provided by a stainless steel liner. For these reasons, it is recommended that 100 percent of the floors and walls be lined for the south tunnel (rooms P-B001 and P-B001A) and the north tunnel (room P-B004).

8 Results and Conclusion

The maximum flood elevation for rooms P-B002 and P-B003 is -23 ft, 6 in. el. It is conservatively recommended that the liner height be 23 ft, 0 in. ht. above top of concrete. This corresponds to a liner elevation of -22 ft, 0 in. el.

The pit wall liner will be extended beyond this recommended height at the pit and tunnel interfaces to join with the tunnel liners.

The floors and walls of the south tunnel (rooms P-B001 and P-B001A) and the north tunnel (room P-B004) will be fully lined.

9 List of Figures and Tables

Figure A-1. Simplified PT Building Layout at -45 ft, 0 in. Elevation.

Figure A-2. Grout Volume for Rooms P-B002 and P-B003.

Figure A-1 Simplified PT Building Layout at -45 ft, 0 in. Elevation

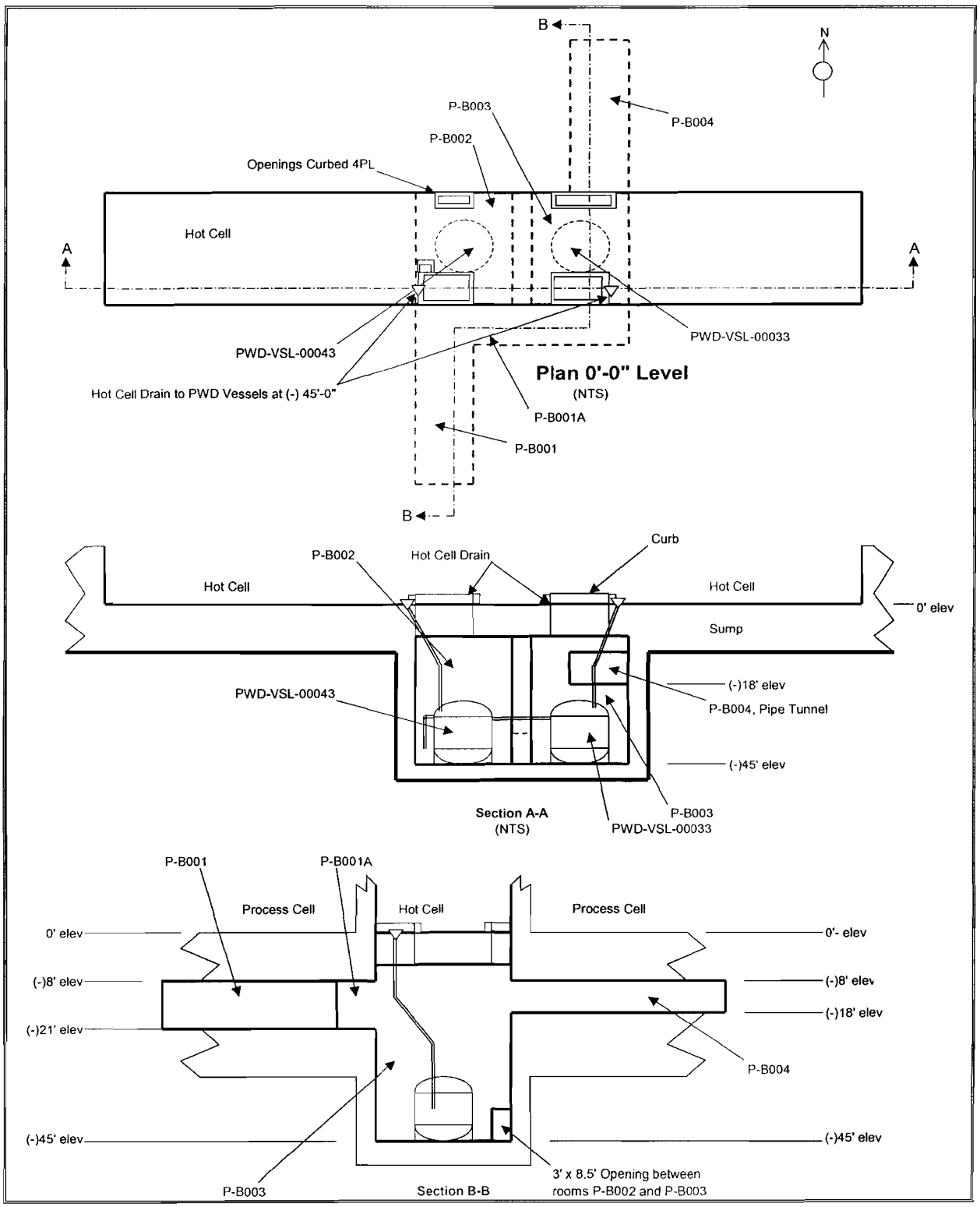

Figure A-2 Grout Volume for Rooms P-B002 and P-B003

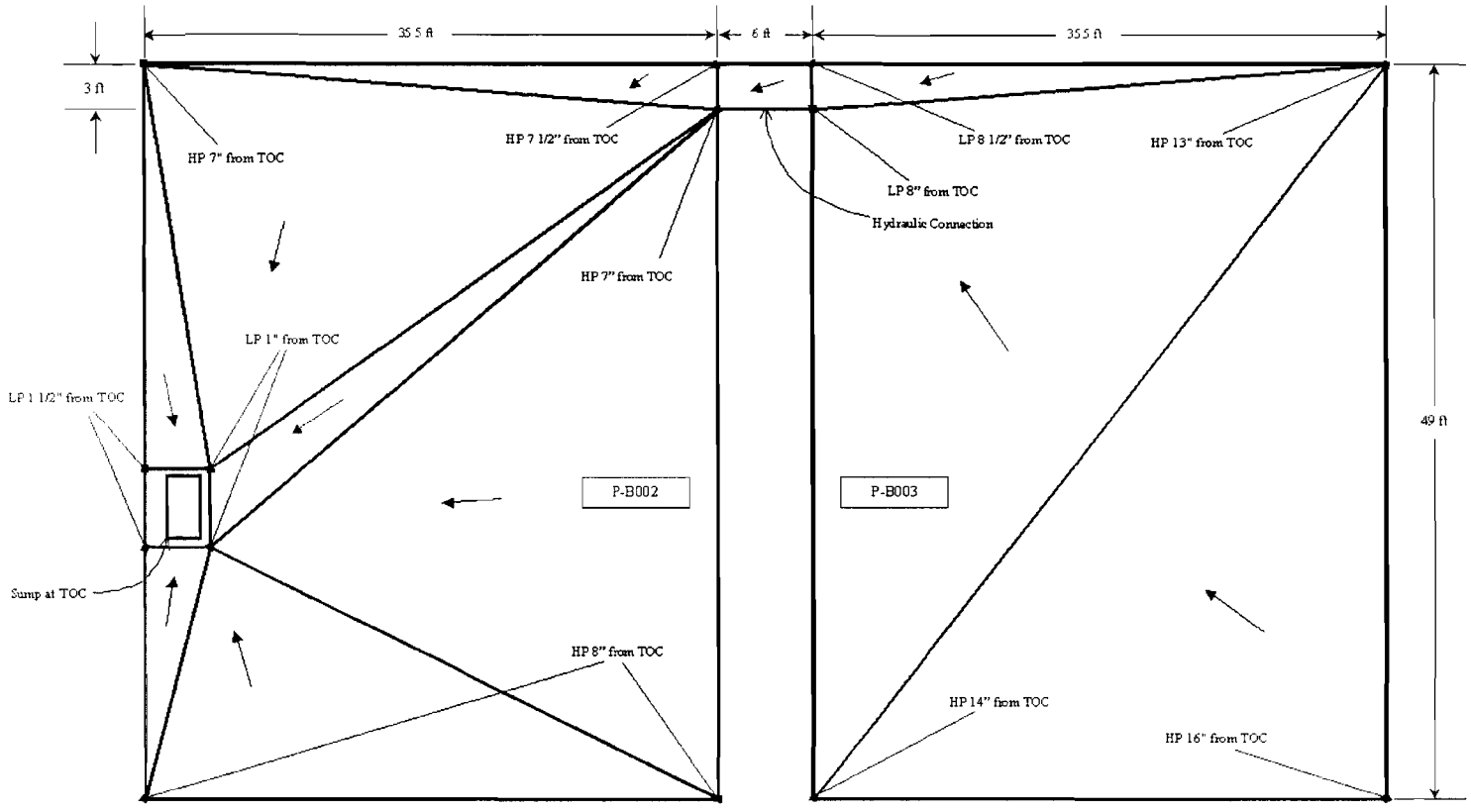

Estimated Average Grout Depth

Room P-B002: 2/3 × (8 in. – 1 in.) + 1 in. = 5.67 in. = 0.47 ft
Hydraulic Connection: 8.00 in. = 0.67 ft
Room P-B003: 2/3 × (16 in. – 8 in.) + 8 in. = 13.33 in. = 1.11 ft

Volume of Grout

(35.5 ft × 49 ft × 0.47 ft) + (3 ft × 6 ft × 0.67 ft) + (35.5 ft × 49 ft × 1.11 ft) = **2,760 ft^2**

Appendix B

Flood Volume Calculation for PT Pit at -19 ft, 0 in. Elevation

1 Objective

Determine the minimum liner height for room P-B005 at the -19 ft, 0 in. elevation C2/C3 floor drain pit within the pretreatment (PT) facility.

2 Inputs

- Room P-B005 is 49 ft long by 22 ft wide, and 8 ft long by 17 ft wide (see Figure B-1).
- The floor-to-ceiling height is 16 ft.

From the PT vessel data sheets and equipment assembly drawings:

- C2 floor drain collection vessel (PWD-VSL-00045) has a total volume of 4,982 gallons, 8 ft ID by 10 ft, 7 in. Tan/Tan, with 2:1 semi-elliptical heads.
- C3 floor drain collection vessel (PWD-VSL-00046) has a total volume of 4,982 gallons, 8 ft ID by 10 ft, 7 in. Tan/Tan, with 2:1 semi-elliptical heads.
- The saddles for both vessels maintain vessel bottom elevations of 1 ft, 0 in. above the floor.

3 Background

Fire-fighting sprinklers are to be located in the C2 and C3 areas of the PT facility. In the event of a fire, a large amount of fire fighting water must be collected and contained within the building. The floor drain system will route the water into the -19 ft, 0 in. elevation pit. This pit will be lined with an appropriate special protective coating.

The C2 floor drain collection vessel (PWD-VSL-00045) and the C3 floor drain collection vessel (PWD-VSL-00046) are provided to collect water from fire fighting. During normal operating conditions, the floor drains collect other surface water such as from a safety shower. Both are located in the -19 ft, 0 in. elevation pit. The capacity of both these vessels is adequate for normal operations. During the design basis fire accident, the volume of fire fighting water is estimated to be 35,000 gallons. This exceeds the capacities of both vessels, therefore each vessel is provided with an overflow into the -19 ft, 0 in. elevation pit. For conservatism, this calculation assumes these vessels will be full at the time of the event. This calculation demonstrates that this pit has ample capacity to contain this volume of fire fighting water.

4 Applicable Codes and Standards

- WAC 173-303. *Dangerous Waste Regulations*. Washington Administrative Code.
- UBC 1997. *Uniform Building Code,* International Conference of Building Officials, Whittier, California, USA.
- NFPA 801. *Standard for Fire Protection for Facilities Handling Radioactive Materials,* National Fire Protection Association, 1998 Edition.

5 Methodology

- The total flood volume is divided by the floor area to obtain the height of the flood water.
- The total flood volume is adjusted to account for both the submerged portions of the vessels and the estimated volume of the submerged piping, supports, and equipment.
- To determine the volume of the submerged portion of the vessels, the height of the total flood volume must be known. Therefore, an iterative calculation method will be used to solve for the height.
- The calculated height, once determined, is rounded up to the nearest 1/2 ft.

6 Assumptions

6.1 Assumption Not Requiring Verification

- The C2 floor drain collection vessel (PWD-VSL-00045) and the C3 floor drain collection vessel (PWD-VSL-00046) are assumed to be full at the time of the event.
- The duration of sprinklers operating is 30 minutes. This is based on the requirements for drainage of the effected area of the facility to be sized to accommodate this duration of time.

6.2 Assumption to be Verified

- The volume of the submerged piping, supports, and equipment is estimated to be 5 % of the combined vessel volumes.
- The sprinkler flow rate density is 0.2 gallons per minute (gpm) per ft^2. This is conservative and bounding, based on engineering judgement for the entire facility.
- The operating area for sprinklers is 3,000 ft^2.
- An estimated hydraulic imbalance factor of 1.4 is used for the sprinkler density. This is conservative and bounding, based on engineering judgement.
- Additional water from a hose stream is 250 gpm for the sprinklers operating duration.

7 Calculations

The volume of each vessel is 4,982 gallons (see Appendix B, page B-4). This converts to:
(4,982 gal) / (7.48 gal/ft^3) = 666 ft^3.

The total fire-fighting water collection volume is calculated as follows:

- Sprinklers: (0.2 gpm per ft^2) × (3000 ft^2) × (30 min) × (1.4 factor for hydraulic imbalance) = 25,200 gallons
- Hose Stream: (250 gpm) × (30 min) = 7,500 gallons

Total = 32,700 gallons

Rounded up to = 35,000 gallons

This converts to 4,679 ft^3 (see Appendix B, page B-4).

The combined floor surface area of room P-B005 is 1,214 ft^2 (see Appendix B, page B-4).

The volume of the submerged portions of piping, supports, and equipment, 67 ft^3 (498 gallons), is 5% of the total combined volume for vessels PWD-VSL-00045 and PWD-VSL-00046 (see Appendix B, page B-4).

Using an iterative calculation method, the submerged volume of the vessels is calculated to be 521 ft^3 (3,872 gallons).

The adjusted total volume is the sum of these 3 volumes: 4,679 ft^3 + 67 ft^3 + 521 ft^3 = 5,267 ft^3.

This adjusted total volume divided by the combined floor surface area of room P-B005 yields the calculated flood height: (5,267 ft^3) / (1,214 ft^2) = 4.3 ft. Rounding up to the nearest 1/2 ft yields 4.5 ft or 54 in. for the calculated flood height.

8 Results and Conclusion

The minimum required liner height for room P-B005 at the -19 ft, 0 in. elevation is 54 in.

9 List of Figures

Figure B-1. Estimate of Liquid Level in the C2/C3 Floor Drain Pit Room P-B005.

Figure B-1 Estimate of Liquid Level in the C2/C3 Floor Drain Pit Room P-B005

Assumptions:
Design fire load = 35,000 gal
1 ft^3 = 7.481 gal

Room Dimensions 49'-0" X 22'-0",
and 17'-0" X 8'-0", see Figure (1)
All Vessels and piping full at time of fire
Volume of Fire Water:

35,000	gal =
4,679	ft^3

Flooded Area Dimensions:

49	ft Length 1
22	ft Wide 1
8	ft Length 2
17	ft Wide 2
1,214	ft^2 (Pit Area)
16	ft Height

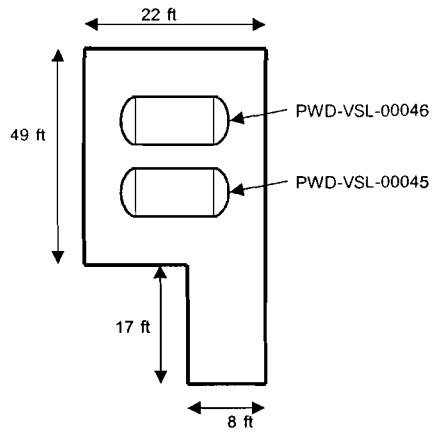

Figure (1), C2/C3 Floor Drain Pit (Plan)
NTS

Vessel Data: (one vessel)

4,982	gal = Vessel total volume
96	in = Vessel diameter (D)
175	in = Vessel length (Crown to Crown)
127	in = Vessel length (Tan to Tan)
12	in = Height of vessel saddle

Estimated deduction of submerged piping, supports, and equip.:

66.6	ft^3	(5% of the Total combined volume of
498	gal	each vessel; 2 x 666 ft^3)

18,026	ft^3 equal the available volume in the pit

Estimates:

52.02	(in) = Estimated height of water in Pit
52.02	(in) = Calculated height of water in Pit

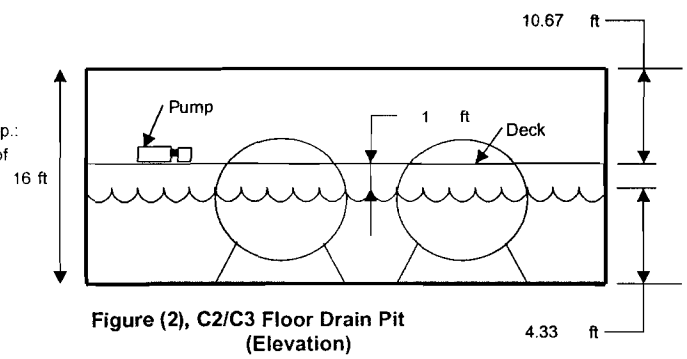

Figure (2), C2/C3 Floor Drain Pit (Elevation)
NTS

Determine deductions for submerged vessels:

40.02	(in) = h of vessel under water
362,919	(in^3) = Volume of a Shell under water
43,620	(in^3) = Volume of a Head under water

900,318	(in^3) = Total volume of vessels under water	(two vessels)
3,898	(gal) = Total volume of vessels under water	(two vessels)
521	(ft^3) = Total volume of vessels under water	(two vessels)

588	(ft^3) = Total deductions
4,396	gal

Appendix C

Flood Volume Calculation for PT (Hot Cell and Black Cells) at 0 ft, 0 in. Elevation

1 Objective

Determine the minimum required liner elevation in the hot cell, the black cells, and curbing around the access openings in the hot cell floor of the pretreatment (PT) facility at elevation 0 ft, 0 in. Verify the design of the hydraulic connections, as shown in Figure C-3, are adequate to account for the flooding case analyzed.

2 Inputs

The following general inputs apply to the physical dimensions of the cell and vessel data

- The width of the wall between rooms P-108A and P-108B is 2 ft, 3 in.
- The width of the wall between rooms P-108 and P-108A is 4 ft.
- The width of the wall between room P-108B and the hot cell is 3 ft.
- The largest side-mounted nozzle on vessel FRP-VSL-00002A (N63) is a 4 in. sch 160 pipe connection with an inside diameter (d) of 3.438 in. (0.2865 ft).

The following general inputs apply to physical constants and properties:

- The acceleration of gravity (g) is 32.2 feet per second-second (ft/s^2).
- The absolute viscosity (μ) and weight density (ρ) of water at 60 °F and 1 atm are 1 centipoise (cp) and 62.4 lbs/ft^3, respectively.

3 Background

Secondary containment in the black cells and hot cell areas is designed with hydraulic connections. The purpose of these connections is to allow large amounts of fluid to move from the black cells into the hot cell and subsequently drain into the – 45 ft, 0 in. elevation pits. The size of the postulated flood is defined as the total volume (capacity of the shell and both heads) of the largest vessel in the containment area.

The cell-to-cell hydraulic connections in the PT Facility have been placed to create black cell containment areas (see Figure C-1). Should a leak occur, the spill will spread into each room of the black cell containment areas before eventually spreading into the hot cell. The cells on the south side of the hot cell, P-0102, P-0102A, P-0104, and P-0106, are connected to create one black cell containment area. The cells on the north side of the hot cell, P-0109, P-0111, P-0112, P-0113, P-0114, P-0117, and P-0117A, form another containment area. The cells containing the FRP vessels, P-0108, P-0108A, P-0108B, and

P-0108C, also form a containment area. The pits below the 0 ft, 0 in. elevation form a collection area for major leaks and spills.

A curb and gutter system is provided to facilitate the flow of fluid from the hot cell into the drains that convey the fluid to the vessels in the –45 ft, 0 in. elevation pits. See Figure C-1 for an illustration of a typical configuration of the curb and gutter system.

The black cells consist of rooms P-0102, P-0102A, P-0104, P-0106, P-0108, P-0108A, P-0108B, P-0108C, P-0109, P-0111, P-0112, P-0113, P-0114, P-0117, and P-0117A. The hot cell consists of only room P-0123.

This calculation determines the minimum liner height for the black cells and hot cell by addressing a steady-state condition for the emptying of the postulated flood volume. A minimum curb height will also be determined and verification of the hydraulic connections between cells.

4 Applicable Codes and Standards

- NA

5 Methodology

5.1 Determine a Maximum Leak Rate

The first step in determining the steady-state condition, which dictates the liner height for the hot cell and black cells, is to calculate the maximum flow rate entering the greater containment area. The flood scenario is the emptying of the total volume of the largest vessel in the containment area (1 FRP vessel FRP-VSL-00002A)).

The greatest flow rate entering the containment area is the maximum leak rate from FRP-VSL-00002A (see Figure C-2). The solution for the leak rate is an iterative process, where first the velocity of the flow is estimated, and then the Reynolds number is calculated using equation 1.

$$Re := 123.9 \frac{\rho \cdot v \cdot d}{\mu}$$ Reynolds number (Equation 1).

The friction factor is then derived from the Reynolds number using Figure C-4 and the resistance coefficient for flow through the pipe (Equation 2) is solved.

$$K := f \cdot \frac{L}{D}$$ resistance coefficient (Equation 2).

Next, the resistance coefficients for flow through the pipe, entrance and exit losses, are summed to determine the total resistance coefficient (Equation 3). The result of equation 3 is the maximum leak rate from FRP-VSL-00002A.

Maximum leak rate (Equation 3).

$$Q := 19.65 \cdot d^2 \cdot \sqrt{\frac{h}{K}}$$

Lastly, the flow rate is divided by the pipe area, using consistent units, to verify the initial estimated velocity and iterated as required.

The following nomenclatures are defined for equations 1, 2, and 3 above:

Q = flow rate through a failed nozzle (gpm).
K = resistance coefficient.
d = internal diameter of nozzle or pipe (in).
h = static head of the fluid above the outlet nozzle (ft).
ρ = weight density of fluid (lbs/ft^3).
v = mean velocity of flow (ft/s).
μ = absolute (dynamic) viscosity (cp).
f = friction factor.
D = internal diameter of pipe (ft).
L = length of pipe (ft).

5.2 Determine the Maximum Level of Fluid in Black Cells and Hot Cell

The maximum level of fluid in the black cells and hot cells is the level at which the fluid migrates through the hydraulic connections, the curb and gutter system, and into the pit at a flow rate equal to the maximum leak rate.

The details of the black cell-to-hot cell connections are shown in Figure C-3. The required velocity through the connections is solved by converting the leak rate from gpm to ft^3/sec. Next divide by the total area of the hydraulic connection openings. Solve for the fluid depth as required. Solve equation 4 for the entrance and exit losses and equation 5 for the loss in the length of pipe. The sum of these losses, when added to the elevation of the center of the black cell to hot cell connections, then determines the maximum fluid depth that the flood will reach in room P-108B.

$$h := K \cdot \frac{v^2}{2g}$$

The entrance and exit losses (Equation 4).

$$h := f \cdot \frac{L}{D} \cdot \frac{v^2}{2g}$$

Darcy's equation for losses in piping (Equation 5).

The following are defined for the above equations 4 and 5:

h = static head of the fluid above the outlet nozzle (ft).
K = resistance coefficient.
v = mean velocity of flow through pipe (ft/s).
f = friction factor
D = internal diameter of pipe (ft).

L = length of pipe (ft).
g = acceleration of gravity (32.2 ft/s^2).

Due to the pressure drops for flow through the black cell to black cell connections, a higher level is present in room P-108A. Because of the similarities between connections, the velocity, friction factor, diameter, and the results of equation 4 remain the same. Input of the correct wall width as the length of pipe to equation 5 gives the head loss due to flow. Adding the results of equation 4 and 5 to the elevation of fluid in room P-108B will yield the elevation of fluid in room P-108A. These steps are repeated to find the elevation of fluid in room P-108, the maximum flood elevation in the hot cell and black cells.

6 Assumptions

6.1 Assumptions Not Requiring Verification

- The maximum postulated flood is the total volume of 1 of the FRP vessels (FRP-VSL-00002A/B/C/D).
- The nature of the leak calculated is the shearing of the largest nozzle (N63) at the lowest part of the FRP vessel FRP-VSL-00002A. The leak rate is assumed to be sustained as the vessel empties.
- The liquid fluid properties has the same properties as water. Using fluid properties of water instead of the waste properties entail less flow resistance and therefore higher flow rate.
- All piping have properties similar to commercial steel pipe with a relative roughness of 0.00052 for 4 in sch 160 pipe and a relative roughness of 0.0003 for 6 in sch 40 pipe.
- The flow path neglects those hydraulic connections which would carry additional fluid to room P-108C.

6.2 Assumptions to be Verified

- The amount of liquid head (h) across the failed nozzle, where the leak takes place, is the height from the nozzle to the top of the vessel shell is 34.7 ft.
- The length of pipe extending into FRP-VSL-00002A from nozzle N63 is estimated (see Figure C-2) at a length (L) of 10 ft.
- The Hydraulic connection configuration is illustrated in Figures C-1 and C-3.
- The elevations of the center line of the hydraulic connections are 19 in. for black cell to hot cell and 16 in. for other black cell to black cell connections.
- Inside diameter (d_h) of the hydraulic connections from cell to cell is 6.065 in. (6 in. sch 40).

7 Calculations

7.1 Maximum Leak Rate

The initial flow velocity through the pipe and nozzle is v_1 = 30.6 ft/s. This is verified through iteration, as required. The inside diameter (d) of the 4 in sch 160 pipe and properties of the liquid are stated in the inputs and assumptions, sections 2 and 6, respectively.

The Reynolds number (Equation 1) is calculated as follows:

$$Re := 123.9 \frac{\rho \cdot v_1 \cdot d}{\mu}$$ Hence, Re = 8.134 x 10^5

This corresponds to a friction factor (f) of 0.0175 using the above Reynolds number and Figure C-4.

The resistance coefficient (Equation 2) for flow through the hydraulic connection pipe is determined using the length of pipe extending into FRP-VSL-00002A from nozzle N63 of 10 ft, the internal diameter of the FRP nozzle 0.2865 ft (4 in. sch 160), and a friction factor of 0.0175 (as stated above).

$$K_p := f \cdot \frac{L}{D}$$ Hence, $K_p = 0.611$

The resistance coefficient for entrance losses with an inward projecting pipe is equal to $K_0 = 0.78$, while the exit losses is $K_1 = 1$.

The sum of the resistance coefficients is $K = K_p + K_0 + K_1 = 2.39$

Using the fluid head (h) of 34.7 ft and the diameter of the FRP nozzle (N63), the maximum leak rate (equation 3) is as follows:

$$Q := 19.65 \cdot d^2 \cdot \sqrt{\frac{h}{K}}$$

Hence, Q = 884.81 gpm. Converting (Q) to ft^3/s results in q = 1.97 ft^3/s.

Dividing the maximum leak rate by the internal area of the 4 in sch 160 (area is 0.0645 ft^2), the flow velocity is calculated and compared against an initial estimate of 30.6 ft/s.

$$v := \frac{q}{A}$$ Hence, v = 30.5 ft/s.

Therefore, the calculated maximum leak rate matches the original assumption and is the solution.

7.2 Maximum Fluid Level

The flow velocity through the hydraulic connections is determined using the calculated flow rate (q = 1.97 ft^3/s) and dividing by the internal area of the 6 in sch 40 pipe (A_h = 0.2006 in) and the number of pipes connecting one black cell containment area to the hot cell (n = 4).

$$v_h := \frac{q}{n \cdot A_h}$$ Flow velocity through are hydraulic connection is v_h = 2.5 ft/s.

Summing the entrance loss coefficient for sharp entrances (K_{0h} = 0.5) and exit loss (K_{1h} = 1) results in the loss through the four hydraulic connections as $K_h = K_{0h} + K_{1h} = 1.5$.

The head loss due to the entrance and exit losses (Equation 4) is then determined as follows:

$$h_0 := K_h \cdot \frac{v_h^2}{2g}$$ Hence, $h_0 = 0.15$ ft.

Using the same methodology as for the FRP nozzle, the Reynolds number (Equation 1) of flow through the hydraulic connections is determined. The inside diameter (d_h) and properties of the liquid are stated in the inputs and assumptions sections 2 and 6, respectively.

$$Re_h := 123.9 \frac{\rho \cdot v_h \cdot d_h}{\mu}$$ Hence, Re = 1.172×10^5.

This corresponds to a friction factor (f_h) of 0.0192 using the above Reynolds number and Figure C-4.

The head loss (Equation 5) through the hydraulic connections is determined using the friction factor (f_h), the width of wall between P-108B and the hot cell ($L_h = 3$ ft), the hydraulic pipe diameter ($D_h = 0.5054$ ft), gravity, and the flow velocity ($v_h = 2.5$ ft/s).

$$h_p := f_h \cdot \frac{L_h}{D_h} \cdot \frac{v_h^2}{2g}$$ Hence, $h_p = 0.011$ ft.

The elevation at the center line of black cell to hot cell connections, see section 6, is $E_{hc} = 19$ in. The fluid elevation relative to 0 ft, 0 in. in cell P-108B required to sustain flow to the hot cell is then calculated as follows:

$E = (h_0 + h_p) \times 12$ in. $+ E_{hc} =$ 20.9 in.

The head loss (Equation 5) between walls P-108A and P-108B (width of wall is $L_{8a} = 2.25$ ft) through the pipe is:

$$h_{8a} := f_h \cdot \frac{L_{8a}}{D_h} \cdot \frac{v_h^2}{2g}$$ Hence, $h_{8a} = 0.008$ ft.

The fluid elevation relative to 0 ft, 0 in. in cell P-108A required to sustain flow to P-108B at level calculated above is $E_{8a} = (h_0 + h_{8a}) \times 12$ in. $+ E = 22.7$ in.

By changing only the width of the wall ($L_8 = 4$ ft), the head loss between P-108 and P-108A is determined using Equation 5.

$$h_8 := f_h \cdot \frac{L_8}{D_h} \cdot \frac{v_h^2}{2g}$$ Hence, $h_8 = 0.015$ ft.

The fluid elevation relative to 0 ft, 0 in. in cell P-108 required to sustain flow to P-108A at a level calculated above is $E_8 = (h_0 + h_8) \times 12$ in. $+ E_8 = 24.7$ in.

8 Results and Conclusion

The maximum fluid elevation has been calculated to be approximately 24.7 in. above the top of the concrete floor at elevation 0 ft, 0 in. It is recommended that the liner for the black cells and hot cell extend to 25 in from elevation 0 ft, 0 in. In addition, the curbs, which interface with the liner, are also recommended to be placed at an elevation of 25 in. Therefore, the minimum required liner elevation in the hot cell, the black cells, and required curb height for the PT facility is 25 in. above the 0 ft, 0 in. elevation.

The adequacy of the hydraulic connections to dissipate a potential flood has been demonstrated. The design of the hydraulic connections are recommended to be configured as shown in Figures C-1 and C-3.

9 List of Figures

Figure C-1. Hydraulic Connections at Elevation 0 ft, 0 in.

Figure C-2. Simplified Vessel Configuration for FRP-VSL-00002A/B/C/D.

Figure C-3. Hydraulic Connection Details.

Figure C-4. Friction Factors.

Figure C-1 Hydraulic Connections at Elevation 0'-0"

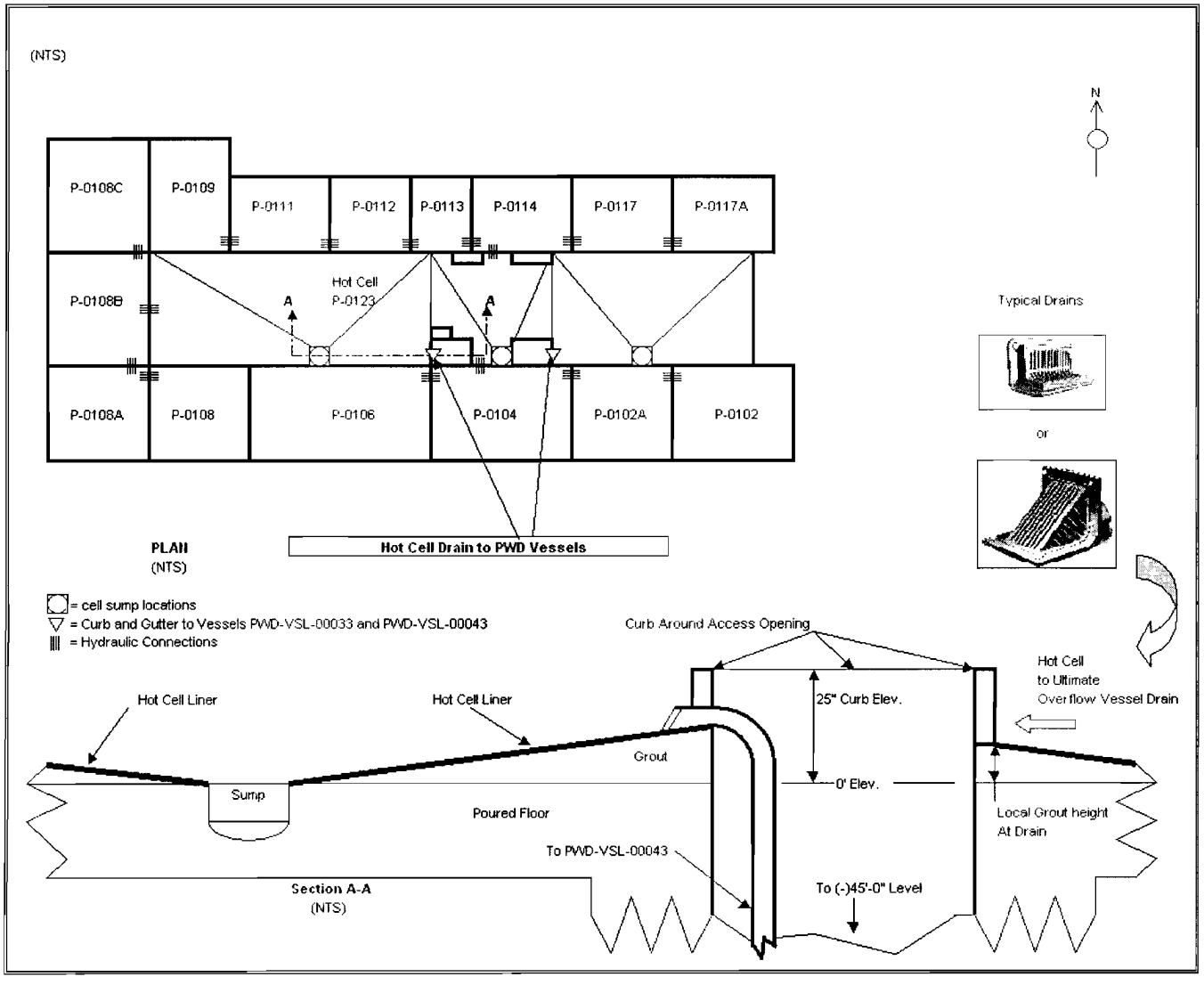

Best Available Copy

Figure C-2 Simplified Vessel Configuration for FRP-VSL-00002A/B/C/D.

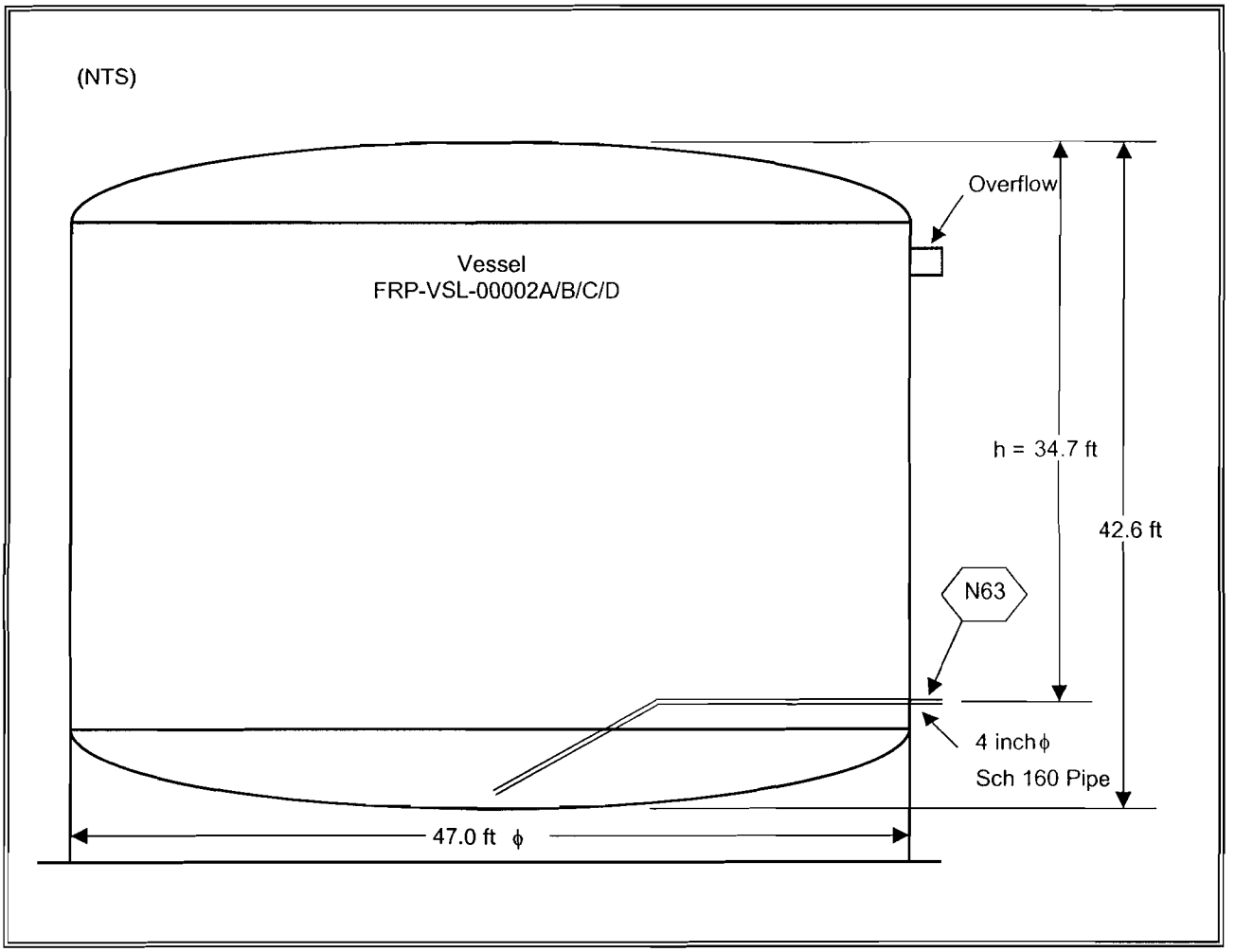

Figure C-3 Hydraulic Connection Details

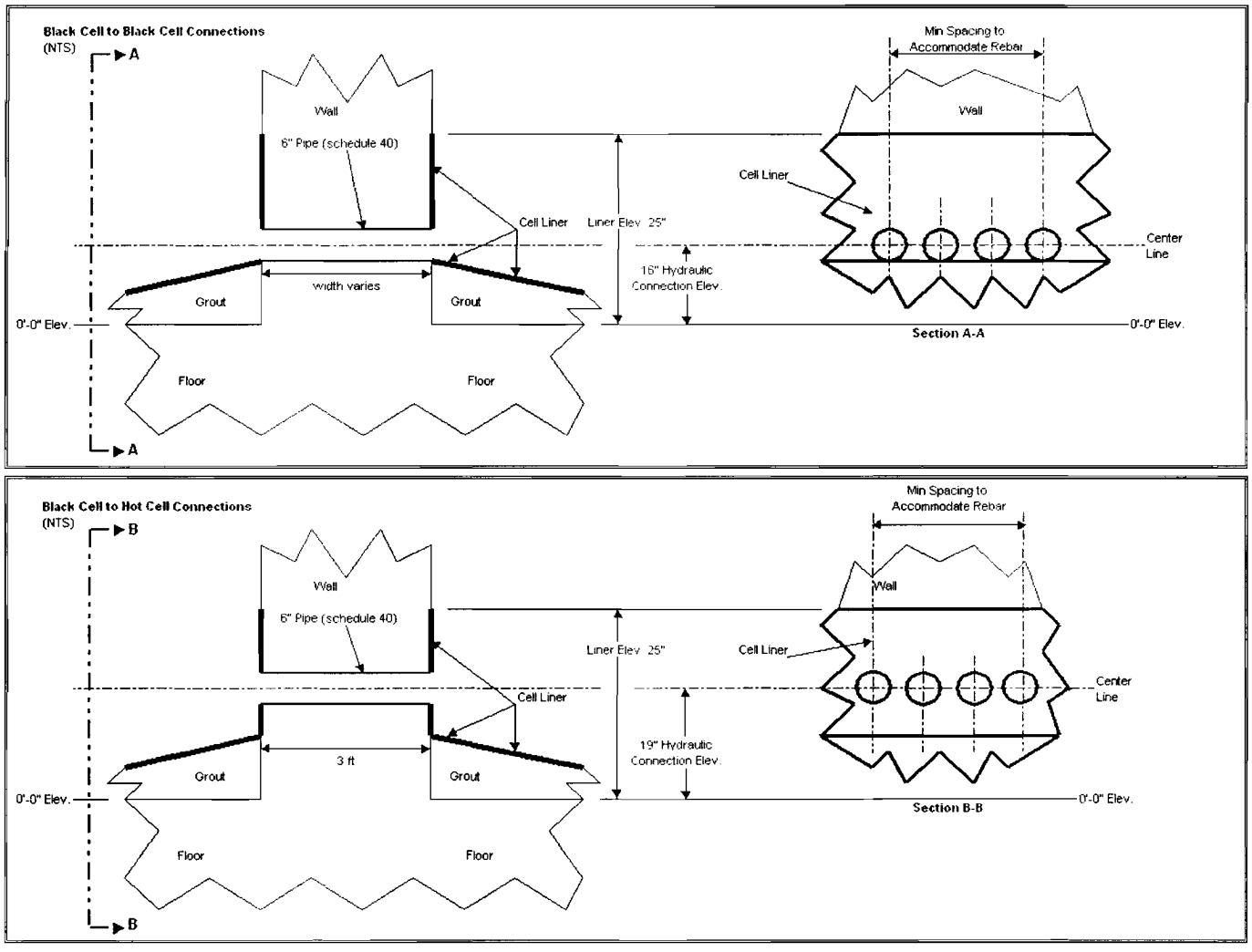

Figure C-4 Friction Factors

Friction Factors for Any Type of Commercial Pipe[18]

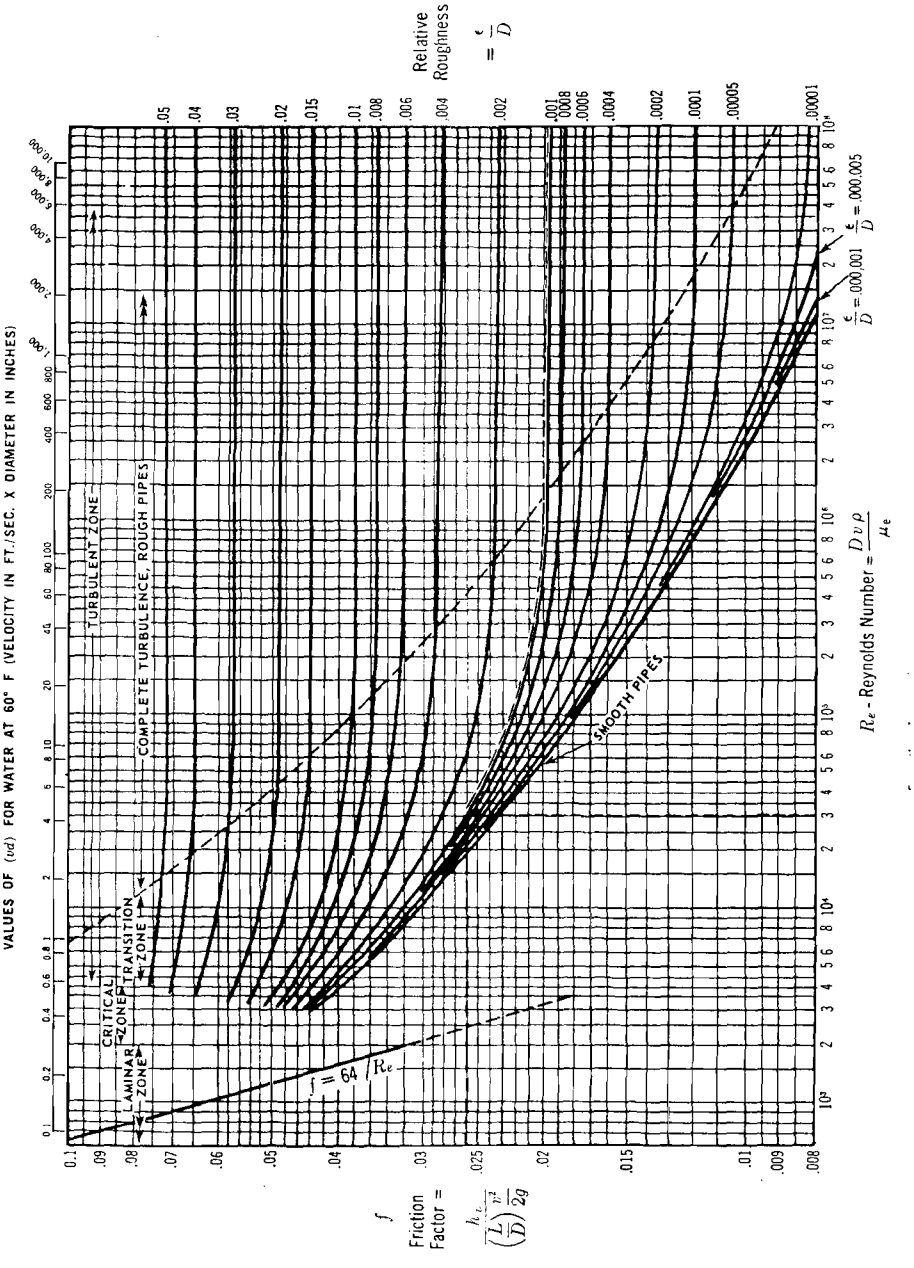

Best Available Copy

Appendix D

Flood Volume Calculation for PT (Room P-0118) at 0 ft, 0 in. Elevation

1 Objective

Determine the minimum required liner elevation of room P-0118 in the pretreatment (PT) facility at elevation 0 ft, 0 in.

2 Inputs

The total volume for 1 of the radioactive liquid waste disposal (RLD) alkaline effluent vessels is equal to 42,950 gallons (5,741 ft^3).

The diameter of the RLD alkaline effluent vessels (RLD-VSL-0017A/B) is 16 ft.

The diameter of the TLP treated LAW evaporator condensate vessel (TLP-VSL-00002) is 6 ft.

The dimension of room P-0118 is 54 ft, 4 in. long by 30 ft, 6 in. wide, with a 21 ft, 0 in. by 4 ft, 6 in. corner removed.

3 Background

The location of room P-0118 per the general arrangement drawings is in the northeast section of the PT facility. The secondary containment for Room P-0118 is designed to include a low point sump and stainless steel liner. Room P-0118 does not have floor drains and when flooded, the method of removal of liquid from the room is through steam ejectors provided at the floor sump. The room is also protected by a fire protection system in case of fire.

The largest vessel in the containment area is one of the RLD alkaline effluent vessels (RLD-VSL-00017A/B).

This calculation supports the design of the cell liner and documents the method used to estimate the minimum liner elevation and requirements.

4 Applicable Codes and Standards

- WAC 173-303. *Dangerous Waste Regulations.* Washington Administrative Code.
- UBC 1997. *Uniform Building Code,* International Conference of Building Officials, Whittier, California, USA.

5 Methodology

The minimum required liner elevation for room P-0118 is determined as follows:

1 Calculate the area of room P-0118.
2 Calculate the maximum flood volume (combination of the largest vessel content and fire sprinkler protection system).
3 Estimate the volume of the submerged piping and supports.
4 Calculate the liner elevation.

Figure D-1 shows a representation of a typical room liner and defines the terms "grout height", "liner height", and "liner elevation". The configuration and dimensions of room P-0118 are provided in Figure D-2. Areas within the room that reduce the available volume for the flood are subtracted from the total volume. The total postulated flood is determined by calculating the total volume for one of the RLD alkaline effluent vessels and adding the accumulation of 20 minutes of fire sprinkler system. The volume of the internal equipment within the vessel is ignored. The total content of vessel RLD-VSL-00017A is released into the cell, while vessel RLD-VSL-00017B maintains its content.

The largest postulated flood is then defined as the total volume of the largest vessel in the containment area plus the accumulation of 20 minutes of fire protection sprinkler discharge water.

6 Assumptions

6.1 Assumptions Not Requiring Verification

- The duration of a sprinkler discharge is 20 minutes.
- Figure D-1 represents a simplified liner configuration of room P-0118. The liner height is defined as the cladding on the walls. The grout height is defined as the depth of grout necessary to maintain a 1 % slope for the longest leak path in the room. The liner elevation is the sum of the liner height and the grout height. This represents the elevation of the liner above the 0 ft, 0 in. elevation.
- The flood liquid has the same properties as water.
- Vessel TLP-VSL-00002 is full at the beginning of the flood scenario.

6.2 Assumptions to be Verified

- The sprinkler flow rate density is 0.17 gallons per minute (gpm) per ft^2.
- The room contains equipment and piping that would be submerged during flooding. To account for this, the postulated flood volume is increased by 5 %.

7 Calculations

7.1 Calculate the Area of the Room

The longest path for the waste to travel in the room is from the northwest corner to the sump. The distance to the sump is 60.2 ft. With a 1 % slope, the maximum grout height is 0.602 ft (~8 in.).

The floor area is equal to: (54.33 ft × 30.5 ft) - (21 ft × 4.5 ft) = ~1,563 ft^2.

Vessel TLP-VSL-00002 is assumed to be full at the time of the event. Excluding the footprint of the vessel from the area of the room will ensure that the calculation is conservative.

The vessel footprint area is then equal to $\pi/4 \times d^2 = \sim 29$ ft^2. (Where d = 6 ft)

The volume of vessel RLD-VSL-00017B must be excluded from the calculation; it is assumed that the vessel is intact at the time of the event. The bottom head of the vessel is 44 in. (3 ft, 8 in.) above the 0 ft, 0 in. level of the cell. The area beneath the head will be flooded.

The vessel footprint area is then equal to: $\pi/4 \times d^2 = \sim 201$ ft^2. (Where d = 16 ft)

<u>To determine the available flood areas, the following values are used:</u>

- The volume of the depression in the liner below the grout height (0 ft, 8 in. level) is calculated in Figure D-3.
- The volume of the sump is calculated in Figure D-4.
- The volume of the room below the 0 ft, 8 in. level is 342 ft^3. See Figure D-3.
- For the zone above the 0 ft, 8 in. level and below the 3 ft, 8 in. level, the area available is the area of the room minus the footprint of vessel TLP-VSL-00002. The room area is equal to the following: (1,563 ft^2 - 29 ft^2) = 1,534 ft^2. This area is shown shaded in Figure D-1.
- For the zone above the 3 ft, 8 in. level, the volume of RLD-VSL-00017B is excluded. The displaced vessel area is 201 ft^2. The room area is then equal to the following: (1,534 ft^2 - 201 ft^2) = 1,333 ft^2. Note that this volume of the vessel is for a flat bottom cylinder, which is conservative.

7.2 Calculate the Flood Volume

- The total volume of RLD-VSL-00017A is equal to 42,952 gallons (5,741 ft^3).
- The flow rate of the fire protection system is equal to: (0.17 gpm/ft^2) × (1,563 ft^2) = 266 gpm.
- The total volume accumulated over the duration of the fire suppression event is then the following: (266 gpm) × (20 min) = 5,320 gallons (711 ft^3).

Therefore, the total volume of the vessel flood volume is equal to (711 ft^3) + (5,741 ft^3) = 6,451 ft^3.

7.3 Add the Design Allowances

To account for other auxiliary components (submerged piping and equipment) that are not inside the main vessels, a design allowance of 5 % is applied to the total volume. Therefore, the maximum postulated flood volume is the following: 6,452 ft^3 + 5 % (6,452 ft^3) = 6,775 ft^3.

7.4 Calculate the Liner Elevation Dimension

- The volume within the room below the 0 ft, 8 in. level is 342 ft^3 (see Figure D-3).
- The volume above the 0 ft, 8 in. level and below the 3 ft, 8 in. level is equal to 1,534 $ft^2 \times 3$ ft = 4,602 ft^3.
- The total volume of the room below the 3 ft, 8 in. level is equal to 4,602 ft^3 + 342 ft^3 = 4,944 ft^3.
- The remaining volume is the following: 6,775 ft^3 - 4,944 ft^3 = 1,831 ft^3.
- Dividing the remaining volume by the area available in the cell above the 3 ft, 8 in. level is then equal to: (1,831 ft^3) / (1,333 ft^2) = 1.37 ft or ~1 ft, 5 in.

Therefore, the liner elevation is equal to the following: (0 ft, 8 in.) + (3 ft, 0 in.) + (1 ft, 5 in.) = 5 ft, 1 in. or 61 in. Rounded to the nearest 1/2 foot equals 5 ft, 6 in. (66 in.).

8 Results and Conclusion

The minimum liner elevation is 66 in. or 5 ft, 6 in.

9 List of Figures

Figure D-1. Simplified Room Liner Detail for Room P-0118 in the PT Facility

Figure D-2. Room P-0118 Floor and Sump Configuration

Figure D-3. Room P-0118 Grout Estimation

Figure D-4. Pretreatment Sump

Figure D-1 Simplified Room Liner Detail for Room P-0118 in the PT Facility

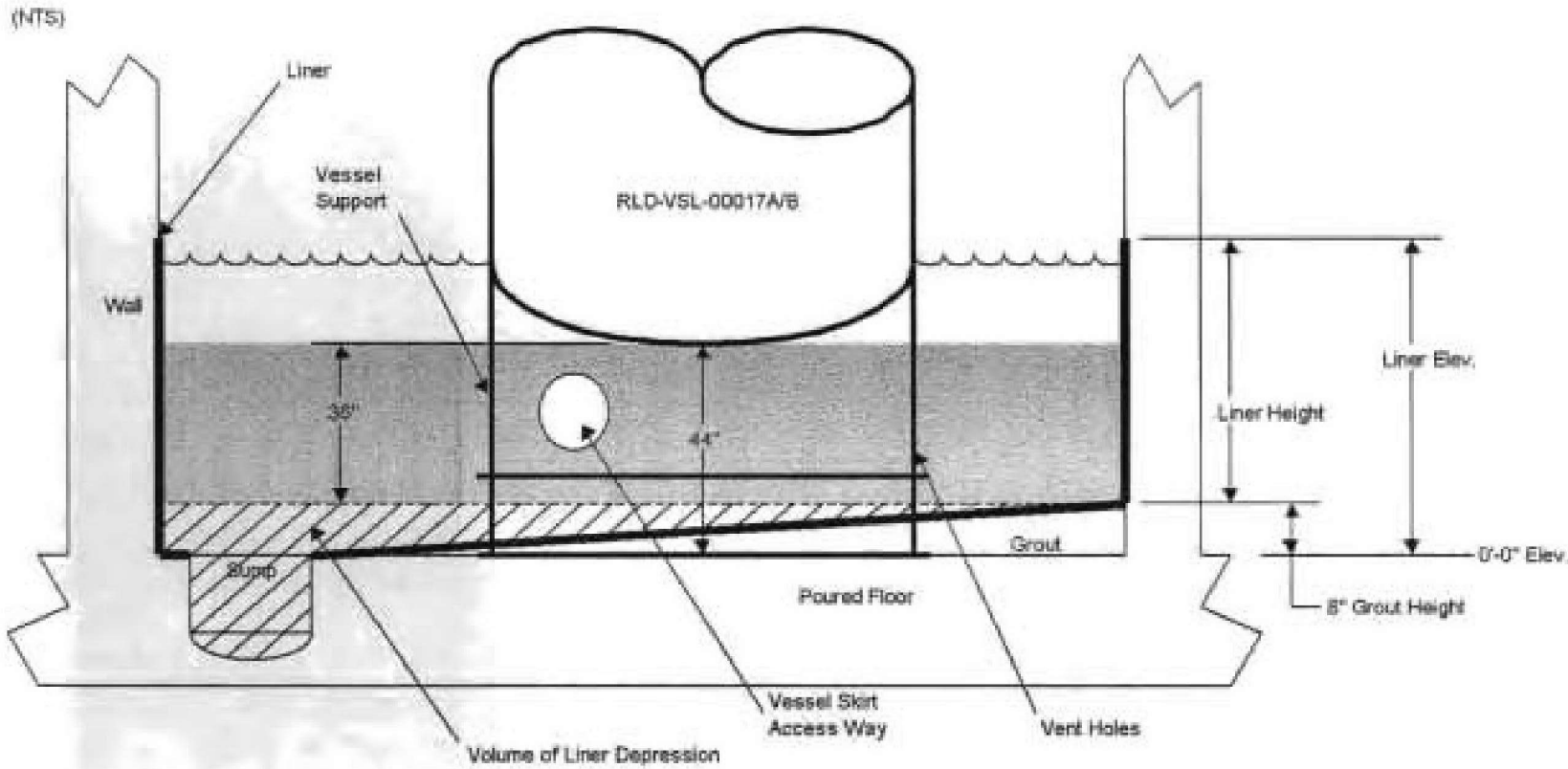

Best Available Copy

Figure D-2 Room P-0118 Floor and Sump Configuration

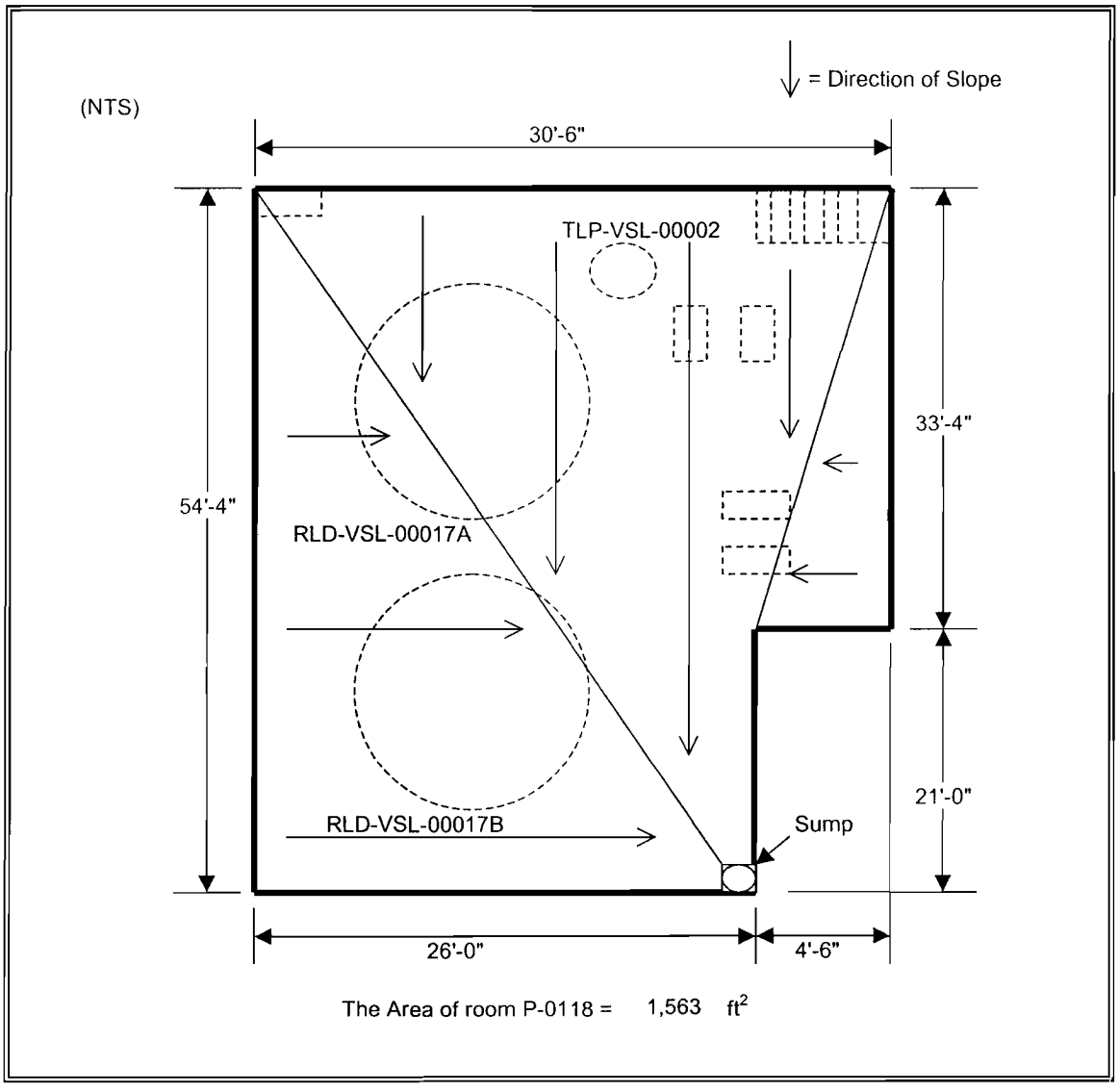

Figure D-3 Room P-0118 Grout Estimation

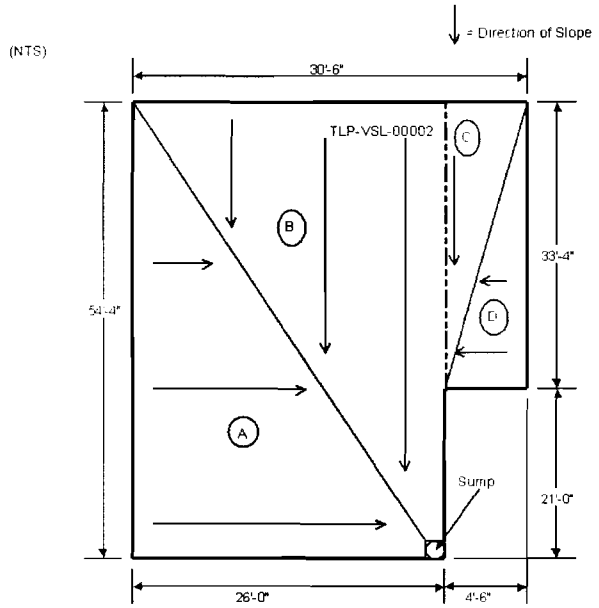

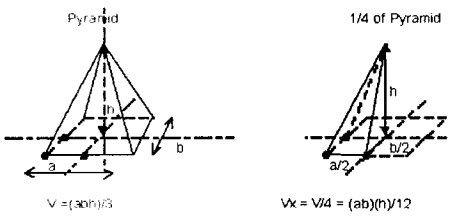

The Volume of the Sump is. (See Figure D-4)
Vsump = 9.41 ft^3

The Volume of the room below the Maximum Grout Height is:
Vroom = Floor Area x Maximum Grout Height
Vroom = 1,047 ft^3

The Total Volume of the Grout is:
V total = Va + Vb + Vc + Vd
V total = 714 ft^3

The Volume of the Void Space below the Maximum Grout Height is equal to:
Void = (Vroom - V total) + Vsump
Void = 342 ft^3

A

a/2 = 54.33 ft
a = 108.66 ft Va = 315.48 ft^3
b/2 = 0.67 ft
b = 1.34 ft
h = 26.00 ft
Va = Volume of Grout in section A

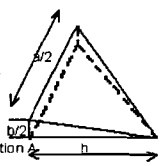

B

a/2 = 26.00 ft
a = 52.00 ft Vb = 315.48 ft^3
b/2 = 0.67 ft
b = 1.34 ft
h = 54.33 ft
Vb = Volume of Grout in section B

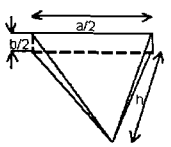

C

a/2 = 4.50 ft
a = 9.00 ft Vw = 17.00 ft^3
b/2 = 0.34 ft
b = 0.68 ft Vstep = 24.75 ft^3
h = 33.33 ft
Vc = Vw + Vstep = 41.75 ft^3
Vc = Volume of Grout in section C

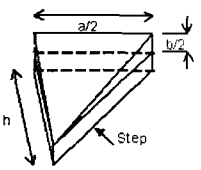

D

a/2 = 33.33 ft
a = 66.66 ft Vw = 17.00 ft^3
b/2 = 0.34 ft
b = 0.68 ft Vstep = 24.75 ft^3
h = 4.50 ft
Vd = Vw + Vstep = 41.75 ft^3
Vd = Volume of Grout in section D

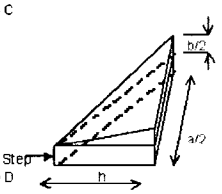

V total = Va + Vb + Vc + Vd = 714 ft^3 = Total Volume of the Grout

Figure D-4 Pretreatment Sump

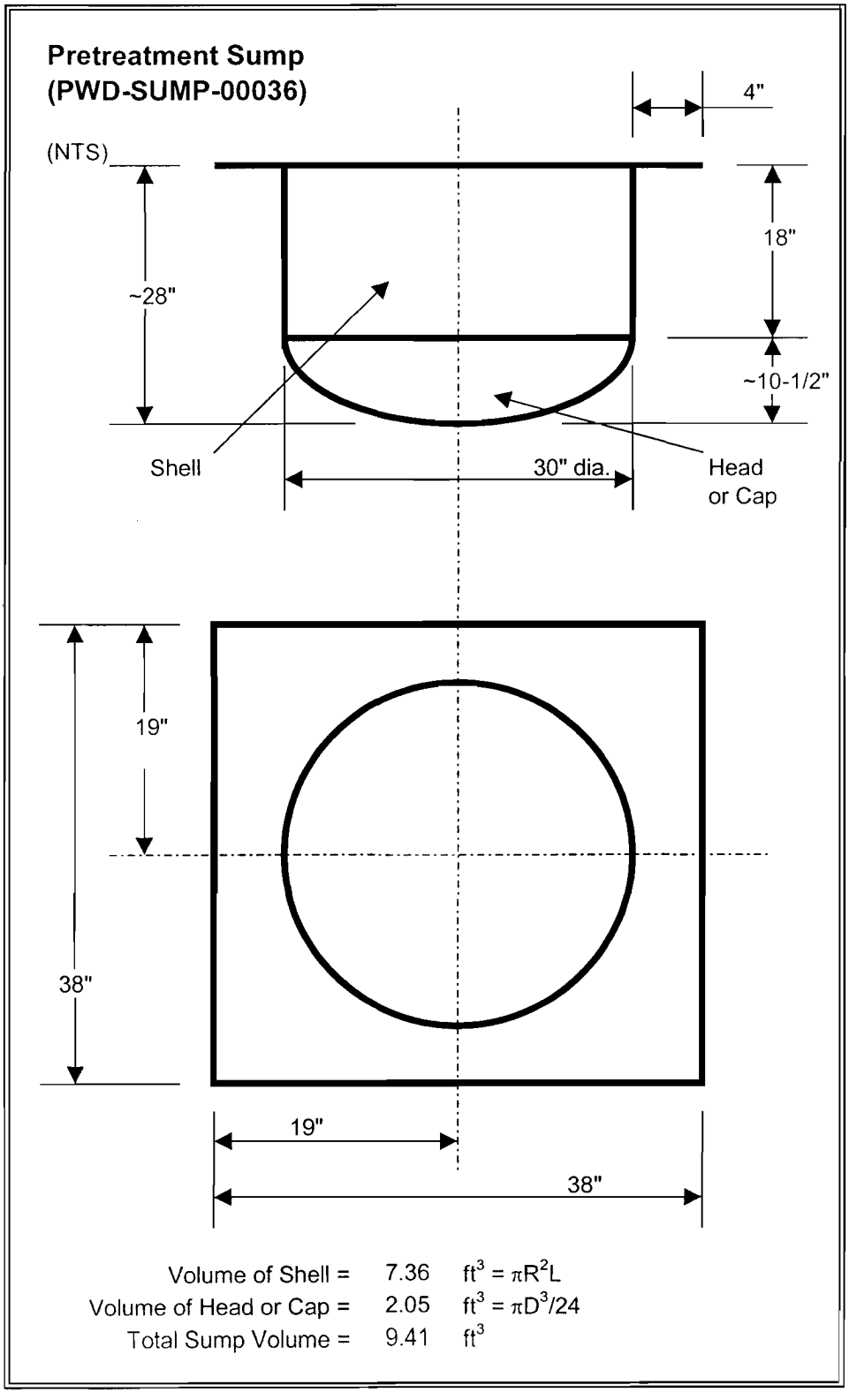

Appendix E

Flood Volume Calculation for PT (Rooms P-0105, P-0105A, P-0105B, and P-0105C) 0 ft, 0 in. Elevation

1 Objective

Determine the minimum liner elevation and minimum required curb height for rooms P-0105, P-0105A, P-0105B, and P-0105C at elevation 0 ft, 0 in. of the pretreatment (PT) facility.

2 Inputs

The combined dimension of rooms P-0105, P-0105A, P-0105B, and P-0105C is 252.5 ft long by 22.67 ft wide. The length and width of the walls between the rooms are as follows (rounded to the nearest 1 foot):

- At column line 4 the wall is 4 ft × 18 ft
- At column line 7.2 the wall is 4 ft × 18 ft
- At column line 12.4 the wall is 7 ft × 18 ft
- At column line 17 the wall is 3 ft × 18 ft

The waste feed evaporator process system (FEP) condensate vessel (FEP-VSL-00005) has a total volume of 5,022 gallons (671 ft^3).

The maximum drainage rate with all floor drains open is 987 gallons per minute (gpm), at a depth of 2 inches.

3 Background

Rooms P-0105, P-0105A, P-105B, and P-105C have flat floors and floor drains. The floor for each room is coated with an appropriate special protective coating.

A curb is provided between rooms P-0107 and P-0105C (column line 3, from row L to row M.8), and between rooms P-0105, P-0105A, P-0105B, P-0105C and corridor PC0101, (row M.8, from column line 3 to column 17). A curb is also provided between rooms P-0105 and P-0103.

The postulated flooding scenario is the combination of the largest vessel rupturing plus the discharge of the fire protection sprinkler system. The only vessel within this area is the FEP condensate vessel.

This calculation supports the design of the curb and documents the method used to estimate the curb heights and requirements.

4 Applicable Codes and Standards

- WAC 173-303. *Dangerous Waste Regulations.* Washington Administrative Code.
- UBC 1997. *Uniform Building Code*, International Conference of Building Officials, Whittier, California, USA.

5 Methodology

The minimum liner and curb elevation is determined as follows:

1 Calculate the floor area of the affected rooms.
2 Calculate the maximum flood volume (combination of the largest vessel and fire protection system).
3 Estimate the volume of the submerged piping and supports.
4 Determine the curb elevation with the floor drains working.

6 Assumptions

6.1 Assumptions not Requiring Verification

- The duration of a sprinkler discharge is 20 minutes.
- The flood liquid has the same properties as water.

6.2 Assumptions to be Verified

- The sprinkler flow rate density is 0.17 gpm per ft^2.
- The room includes equipment and piping which will be submerged during flooding. To account for this, the postulated flood volume is increased by 5 %.

7 Calculations

7.1 Calculate the Floor Area

The floor area for rooms P-0105, P-0105A, P-0105B, and P-0105C is determined as follows:

$A_{P\text{-}0105,\ P\text{-}0105A,\ P\text{-}0105B,\ P\text{-}0105C} = (252.5\ ft) \times (22.67\ ft) = 5{,}724\ ft^2$.

There are 4 walls occupying floor space within the above rooms. The area of occupied floor space for the 4 walls is determined as follows:

$A_{4Walls} = [(4\ ft) \times (18\ ft) + (4\ ft) \times (18\ ft) + (7\ ft) \times (18\ ft) + (3\ ft) \times (18\ ft)] = 324\ ft^2$.

Therefore, the total floor area is equal to the area of the room minus the wall protrusions:

$(5{,}724\ ft^2) - (324\ ft^2) = 5{,}400\ ft^2$

7.2 Calculate the Postulated Flood

The maximum flood volume is a combination of the total volume of the largest vessel in the containment area and the volume added by the discharge of the fire protection system.

The flood volume equals:
$(671\ ft^3) + (0.17\ gpm/ft^2) \times (5{,}400\ ft^2) \times (20\ min) / (7.481\ gallon/ft^3) = 3{,}125\ ft^3$.

7.3 Calculate the Contingency for Submerged Equipment

The room includes equipment and piping that may be submerged during flooding. To account for this, 5 % of the postulated flood volume is added: $(3{,}125\ ft^3) \times 5\% = \sim 156\ ft^3$.

The maximum postulated flood volume is 3,125 ft^3 plus 156 ft^3, which equals 3,281 ft^3.

7.4 Determine the Curb and Liner Elevation without Floor Drains

According to section 7.1 and section 7.3, the floor area is equal to 5,400 ft^2 and the maximum postulated flood is equal to 3,281 ft^3, respectively.

Therefore, the curb and liner height without floor drains operational is:
$(3{,}281\ ft^3)/(5{,}400\ ft^2) = 0.61\ ft$ (7.3 in.).

7.5 Determine the Curb and Liner Elevation with Floor Drains

It is assumed that the total volume of the waste feed evaporator condensate vessel (FEP-VSL-00005) is released and distributed into the rooms.

The flood height in the room is then equal to $(671\ ft^3)/(5{,}400\ ft^2) = 0.12\ ft$ (1.5 in.)

The fire suppression system will then contribute $(0.17\ gpm/ft^2) \times (5{,}400\ ft^2) = 918\ gpm$ over the next 20 minutes.

As the depth of the liquid in the rooms increases, so does the flow rate through the drain system. The main drain header is designed to accommodate 987 gpm at a depth of 2 in. The depth or head over the drains will increase until the flow through the drains matches the flow into the rooms. Due to the instantaneous vessel rupture, a sustained inflow of 918 gpm (sprinklers flow rate), and a drain capacity of 987 gpm (at a depth of 2 in.), the level in the room does not exceed 2 in.

Therefore, the minimum recommended liner and curb height, with a 50 % contingency, is 3 in. (see Figure E-1). This recommendation is based on a fully operational floor drain system during the postulated flooding scenario.

8 Results and Conclusion

The minimum curb and liner elevation for rooms P-0105, P-0105A, P-0105B, and P-0105C is 3 in.

9 List of Figures

Figure E-1. Dimensions and Details for Rooms P-0105, P-0105A, P-0105B, and P-105C

Figure E-1 Dimensions and Details for Rooms P-0105, P-0105A, P-0105B, and P-0105C

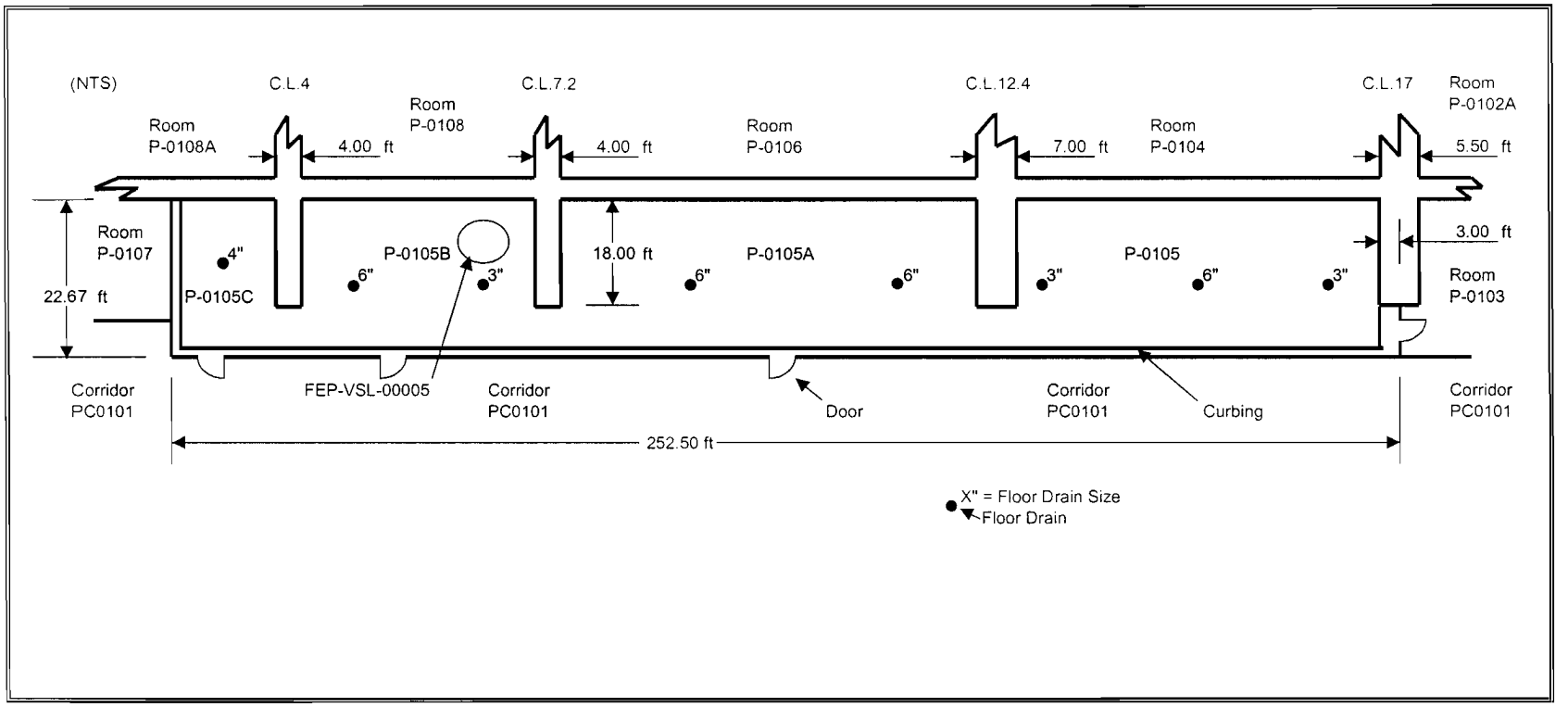

R10077763

DOCUMENT INFORMATION

The following information is required when submitting a document to PDC for issuance.	**Correspondence (CCN) No:** _____
	Document No: 24590-PTF-PER-M-03-001
	Rev: 0

Project Information (Check Applicable Box)

☐ Balance of Facilities ☐ HLW Vitrification ☐ Analytical Laboratory ☐ Across all areas

☒ Pretreatment ☐ LAW Vitrification ☐ External Interfaces

Document is applicable to ALARA (as determined by the originator)? ☐ Yes ☒ No

Applicability to ALARA means that the item has the potential to affect doses, contamination levels, or releases to the environment. (See 24590-WTP-GPP-SRAD-002, *Application of ALARA in the Design Process*, sections 4.1 and 4.2 for more information.)

Subject code(s): _____ (for correspondence only)

ACTION ITEM INFORMATION (for correspondence other than meeting minutes)

Commitments: ☐ Yes ☒ No (if yes, brief description below)

_____

_____

Tracked by RITS

Commitment Owed to: _____ Due Date: _____

Actionee(s)			

Tracked by PADC

Written Response Required: ☐ Yes ☒ No

Owed to: _____ Due Date: _____

This correspondence closes action on Correspondence Number _____

☐ Subcontract Files _____ Copies

☐ PAAA Coordinator MS14-4B

☐ Contains SENSITIVE Information

Additional Departmental Info (to facilitate keyword search)

Internal ☐ DNFSB ☐ ORP ☐ OSR ☐ WDOE ☐ WDOH ☐ Other _____

Special Instructions for PDC

6/24/03

☒ Processed Data Entry ☐ Copied QA ☐ Scanned ☐ Filed

Document title: **Flooding Volume for 28 Ft Level in PT Facility**

Contract number: DE-AC27-01RV14136

Department: Mechanical Systems

Author(s): S Arora

ISSUED BY
RPP-WTP PDC
INIT 6/24/03
DATE 6/24/03

Principal author signature: S Arora

Document number: 24590-PTF-PER-M-03-001, Rev 0

Checked by: R Stevens

Checker signature: Robert E. Stevens

Date of issue: 16 June 2003

Issue status: Issued for Permitting Use

Approved by: S Grabowski

Approver's position: Area Project Engineering Manager

Approver signature: S. Grabowski

MARK W. HOFFMANN
STATE OF WASHINGTON
0030952
REGISTERED
PROFESSIONAL ENGINEER
6/23/03
EXP. RES 12/10/04

This bound document contains a total of 7 sheets

River Protection Project
Waste Treatment Plant
2435 Stevens Center Place
Richland, WA 99352
United States of America
Tel: 509 371 2000

Notice

Please note that source, special nuclear, and byproduct materials, as defined in the Atomic Energy Act of 1954 (AEA), are regulated at the US Department of Energy (DOE) facilities exclusively by DOE acting pursuant to its AEA authority. DOE asserts, that pursuant to the AEA, it has sole and exclusive responsibility and authority to regulate source, special nuclear, and byproduct materials at DOE-owned nuclear facilities. Information contained herein on radionuclides is provided for process description purposes only.

History Sheet

Rev	Date	Reason for revision	Revised by
0	6/16/03	Issued for Permitting Use	S. Arora

Contents

Notice ii
History Sheet iii
Acronyms and Abbreviations v
1 Introduction 1
2 Applicable Documents 1
3 Description 1
3.1 Elevation 28 Ft 2

Acronyms and Abbreviations

AEA	Atomic Energy Act of 1954
DOE	US Department of Energy
FRP	feed receipt process
HLW	high-level waste
LAW	low-activity waste
PT	pretreatment
PWD	plant wash and disposal
WAC	Washington Administrative Code

1 Introduction

The Washington Administrative Code, WAC 173-303-640(4)(e), addresses tank systems containing dangerous waste. This code requires that secondary containment systems be designed to contain 100 % of the capacity of the largest tank within its boundary. Also included in this report is the containment of the fire water discharge, where applicable, within the boundary of the secondary containment.

This report specifically addresses flooding scenarios to be contained within the pretreatment (PT) facility for 28 ft elevation and establishes the minimum requirements for secondary containment.

2 Applicable Documents

WAC 173-303. *Dangerous Waste Regulations*. Washington Administrative Code.

3 Description

The PT facility receives low-activity waste (LAW) feed and high-level waste (HLW) feed from the Double-Shell Tank System. LAW feed and HLW feed are pumped through double-walled underground transfer lines to the PT facility.

The purpose of the PT facility is to pretreat the waste received from the Double-Shell Tank System and transfer it to the LAW and the HLW vitrification facilities. Within the LAW and HLW vitrification facilities the waste is formed into glass logs suitable for long-term disposal.

Within the PT facility, the LAW feed is transferred to the waste feed receipt process (FRP) vessels (FRP-VSL-00002A/B/C/D), while the HLW feed is sent to the HLW feed receipt vessel (HLP-VSL-00022). These wastes are temporarily stored in the vessels before being pumped and treated by the PT processing equipment.

These vessels are located in black cells and are not accessible. The black cells are arranged in a "U" shape around a central hot cell in the PT facility, where major processing equipment is located.

The hot cell is remotely maintainable with the use of a crane system. Below the center of the hot cell are 2 adjacent rooms in the deep pit at the -45 ft elevation. This is the low point for the PT facility. Within these rooms are the plant wash and disposal (PWD) ultimate overflow vessel (PWD-VSL-00033) and the HLW effluent transfer vessel (PWD-VSL-00043).

The FRP vessels are the largest in the PT facility. The flood scenario at 0 ft elevation addressed a postulated failure of 1 FRP vessel and the movement of its fluid from a black cell to the hot cell, and then to the -45 ft elevation pit in *Flooding Volume for PT Facility* (24590-PTF-PER-M-02-005, Rev 7). The flooding scenario also addressed the fire water pit at the -19 ft elevation. This document addresses areas at the 28 ft elevation for secondary containment.

3.1 Elevation 28 Ft

3.1.1 Rooms P-0201, P-0201A, P-0203, P-0203A, P-0203B, P-0204, P-0206, P-0207, P-0208, P-0209, P-0210, and P-0212

There are no regulated tanks or vessels located on the 28 ft elevation in this facility.

Rooms P-0201, P-0201A, P-0203, P-0203A, P-0203B, and P-0204 are located in the south side of the PT facility and contain various items of regulated system ancillary equipment.

Rooms P-0206, P-0207, P-0208, P-0209, P-0210, and P-0212 are located in the north side of the PT facility and contain a regulated bulge and various items of regulated system ancillary equipment.

Floor drains are provided to direct any potential leakage or spillage from the ancillary equipment in the above regulated areas to the C3 floor drain collection vessel (PWD-VSL-00046). A curb has been provided at the walls between the dangerous waste regulated and non-regulated areas to prevent leakage from regulated areas to C2 areas. Entries to containment areas have drainage trenches immediately in front of them to prevent fire water or other material from flowing into C2 areas.

The flood volume for these regulated areas is based principally on the discharge of the fire protection sprinkler system with only minimal contribution from leakage of ancillary equipment. Therefore, no formal calculation for flood height is provided in this document. The floor drains and curbs are sized for 20 minutes of fire sprinkler water. The floor and curbing for the regulated areas are lined with a special protective coating to a minimum height of 3 inches.

MASTER DISTRIBUTION SCHEDULE

Document Number	Rev
24590-PTF-PER-M-03-001	0

Insert rows as necessary using tab key ↑

Name	MSIN	Controlled	Uncontrolled	Size						Comments
				8 ½ x 11 (A)	11 x 17 (B)	Drawings			As Is	
						C	D	E		
Grabowski, Steve	MS9-A		X						X	
Chiaramonte, Jerry	MS9-A		X						X	
Erlandson, Brad	MS4-C1		X						X	
Markillie, Jeff	MS4-C1		X						X	
Normandin, Greg	MS4-C1		X						X	
Julyk, John	MS8-B		X						X	
Hoffmann, Mark	MS4-B2		X						X	
Hendricks, Gerry	MS9-A		X						X	
Stevens, Robert	MS8-B		X						X	
Arora, Sam	MS8-B		X						X	

Approver John Julyk (*Print Name*) — (*Signature*) — 6/17/03 (*Date*)

R10314521

ISSUED BY
RPP-WTP PDC
INIT 5/26/04 DATE

Document title: **Flooding Volume for 77 Ft Level in PT Facility**

Contract number: DE-AC27-01RV14136

Department: Mechanical Systems

Author(s): D Reinemann

Principal author signature:

Document number: 24590-PTF-PER-M-04-0003, Rev 0

Checked by: R Stevens

Checker signature:

Date of issue: 26 May 2004

Issue status: Issued for Permitting Use

Approved by: R Smith

Approver's position: Area Project Engineering Manager

Approver signature:

MARK W. HOFFMANN
STATE OF WASHINGTON
0030952
REGISTERED
PROFESSIONAL ENGINEER
5/26/04
EXPIRES 12/10/04

This bound document contains a total of 7 sheets

River Protection Project
Waste Treatment Plant
2435 Stevens Center Place
Richland, WA 99352
United States of America
Tel: 509 371 2000

Notice

Please note that source, special nuclear, and byproduct materials, as defined in the Atomic Energy Act of 1954 (AEA), are regulated at the US Department of Energy (DOE) facilities exclusively by DOE acting pursuant to its AEA authority. DOE asserts, that pursuant to the AEA, it has sole and exclusive responsibility and authority to regulate source, special nuclear, and byproduct materials at DOE-owned nuclear facilities. Information contained herein on radionuclides is provided for process description purposes only.

History Sheet

Rev	Date	Reason for revision	Revised by
0	5/26/04	Issued for Permitting Use	D. Reinemann

Contents

Notice ii
History Sheet iii
Acronyms and Abbreviations v
1 Introduction 1
2 Applicable Documents 1
3 Description 1
3.1 Elevation 77 Ft 2

Acronyms and Abbreviations

AEA	Atomic Energy Act of 1954
CNP	cesium nitric acid recovery process
DOE	US Department of Energy
FRP	feed receipt process
HLP	HLW lag storage and feed blending process
HLW	high-level waste
LAW	low-activity waste
PT	pretreatment
PWD	plant wash and disposal
WAC	Washington Administrative Code

1 Introduction

The Washington Administrative Code, WAC 173-303-640(4)(e), addresses tank systems containing dangerous waste. This code requires that secondary containment systems be designed to contain 100 % of the capacity of the largest tank within its boundary. Also included in this report is the containment of the fire water discharge, where applicable, within the boundary of the secondary containment.

This report specifically addresses flooding scenarios to be contained within the pretreatment (PT) facility for 77 ft elevation and establishes the minimum requirements for secondary containment.

2 Applicable Documents

WAC 173-303, *Dangerous Waste Regulations*, Washington Administrative Code

3 Description

The PT facility receives low-activity waste (LAW) feed and high-level waste (HLW) feed from the Double-Shell Tank System. This mixed waste feed is pumped through double-walled underground transfer lines to the PT facility.

The purpose of the PT facility is to pretreat the waste received from the Double-Shell Tank System and to transfer it to the LAW and the HLW vitrification facilities. Within the LAW and HLW vitrification facilities, the waste is formed into glass logs suitable for long-term disposal.

Within the PT facility, the LAW feed is transferred to the waste feed receipt process (FRP) vessels (FRP-VSL-00002A/B/C/D), while the HLW feed is sent to the HLW feed receipt vessel (HLP-VSL-00022). These wastes are temporarily stored in the vessels before being pumped and treated by the PT processing equipment.

These vessels are located in black cells and are not accessible. The black cells are arranged in a "U" shape around a central hot cell in the PT facility, where major processing equipment is located.

The hot cell is remotely maintainable with the use of a crane system. Below the center of the hot cell are 2 adjacent rooms in the deep pit at the -45 ft elevation. This is the low point for the PT facility. Within these rooms are the plant wash and disposal (PWD) ultimate overflow vessel (PWD-VSL-00033) and the HLW effluent transfer vessel (PWD-VSL-00043).

The FRP vessels are the largest in the PT facility. The flood scenario at 0 ft elevation addressed a postulated failure of 1 FRP vessel and the movement of its fluid from a black cell to the hot cell, and then to the -45 ft elevation pit in *Flooding Volume for PT Facility* (24590-PTF-PER-M-02-005). The flooding scenario also addressed the fire water pit at the -19 ft elevation.

The flood scenario at 28 ft elevation addressed containment of dangerous waste releases and discharge of fire protection equipment in *Flooding Volume for 28 Ft Level in PT Facility* (24590-PTF-PER-M-03-001).

The flood scenario at 56 ft elevation addressed containment of dangerous waste releases and discharge of fire protection equipment in *Flooding Volume for 56 Ft Level in PT Facility* (24590-PTF-PER-M-04-001).

This document addresses areas at the 77 ft elevation for secondary containment.

3.1 Elevation 77 Ft

3.1.1 Rooms P-0402, P-0407, P-0410, P-0411, P-0415, P-0415A, P-0422A, P-0423, P-0425, P-0426, P-0430, and P-0431A

There are no regulated tanks or vessels located on the 77 ft elevation in this facility.

Rooms P-0402, P-0422A, P-0423, P-0425, and P-0426 are located in the south side of the PT facility and contain regulated bulges and various items of regulated system ancillary equipment.

Room P-0407 is located in the west side of the PT facility and contains various items of regulated system ancillary equipment.

Rooms P-0410, P-0411, P-0415, and P-0415A are located in the north side of the PT facility and contain regulated bulges and various items of regulated system ancillary equipment.

Room P-0430 is located in the north side of the PT facility and contains regulated miscellaneous units for the cesium nitric acid recovery system. The cesium evaporator primary condenser (CNP-HX-00002), the cesium evaporator inter-condenser (CNP-HX-00003), the cesium evaporator after-condenser (CNP-HX-00004), and various items of regulated system ancillary equipment are located in this cell. All three of the heat exchangers are free flowing units designed not to retain dangerous waste.

Room P-0431A is located in the interior of the PT facility and contains various items of regulated system ancillary equipment.

Floor drains are provided to direct any potential leakage or spillage from the ancillary equipment in the above regulated areas to the C3 floor drain collection vessel (PWD-VSL-00046). A curb has been provided at the walls between the dangerous waste regulated and non-regulated areas to prevent waste migration from regulated areas to C2 areas. Entries to containment areas have drainage trenches immediately in front of them to prevent dangerous waste or other liquids (such as firewater) from flowing into C2 areas.

The flood volume for these regulated areas is based principally on the discharge of the fire protection sprinkler system. Minimal contribution from leakage of ancillary equipment and miscellaneous treatment units is considered because these plant items are designed not to retain dangerous waste, and because the floor drains direct potential leakage to PWD-VSL-00046. Therefore, no formal calculation for flood height is provided in this document. The floor drains and curbs are sized for 20 minutes of fire sprinkler water. The floor and curbing for the regulated areas are lined with a special protective coating to a minimum height of 3 inches.

ISSUED BY
RPP-WTP PDC

R10397920

Document title: **Leak Detection for Underground Transfer Lines**

Contract number: DE-AC27-01RV14136

Department: Mechanical Systems

Author(s): G. Chiaramonte

Principal author signature:

Document number: 24590-PTF-PER-M-04-0006, Rev 0

Checked by: J. Julyk

Checker signature:

Date of issue: 23 September 2004

Issue status: Issued for Permitting Use

Approved by: R. Smith

Approver's position: Area Project Engineering Manager

Approver signature:

GERALD RUSSEL CHIARAMONTE
STATE OF WASHINGTON
036043
REGISTERED
PROFESSIONAL ENGINEER
EXPIRES: 11/9/2004

10-6-04

This bound document contains a total of 12 sheets

River Protection Project
Waste Treatment Plant
2435 Stevens Center Place
Richland, WA 99354
United States of America
Tel: 509 371 2000

Notice

Please note that source, special nuclear, and byproduct materials, as defined in the Atomic Energy Act of 1954 (AEA), are regulated at the US Department of Energy (DOE) facilities exclusively by DOE acting pursuant to its AEA authority. DOE asserts, that pursuant to the AEA, it has sole and exclusive responsibility and authority to regulate source, special nuclear, and byproduct materials at DOE-owned nuclear facilities. Information contained herein on radionuclides is provided for process description purposes only.

History Sheet

Rev	Date	Reason for revision	Revised by
0	9/23/04	Issued For Permitting Use	G. Chiaramonte

Contents

Notice ii
History Sheet iii
Acronyms v
1 Summary 1
2 Objective 1
3 Description 1
4 Assumptions 2
5 Analysis 2
6 Detectable Leak Rates 3
7 Bounding Calculations 4
7.1 Methodology 4
7.2 Bounding Calculation 5
8 References 7

Acronyms

AEA	Atomic Energy Act of 1954
DOE	US Department of Energy
ETF	Effluent Treatment Facility
HLW	high-level waste
LAW	low-activity waste
LAB	laboratory facility
LDB	leak detection box
LERF	Liquid Effluent Retention Facility
PT	pretreatment
PWD	plant wash and disposal
TFC	tank farm contractor
WAC	Washington Administrative Code

1 Summary

The minimum leak rates that can be detected within 24 hours are estimated for each of the double-walled underground transfer lines in the WTP facility. There are a total of 21 transfer lines whose encasements range in length from 289 ft to 1078 ft. Eight of the lines have a slope of 1:50, and the remaining 13 lines have a 1:200 slope.

The minimum leak rates (given to three significant figures) that can be detected within a 24 hour period range from 0.034 gal/hr for the shortest line to 0.141 gal/hr for the longest line, assuming that the leak is at the most remote location from the leak detection box.

The leak detection calculations reveal that the largest single component of the minimum detectable flow rate relates to the volume of leaked liquid required to wet the pipe (i.e., pipe holdup). For the longest line, this represents over 80% of the total minimum detectable flow rate. It is believed that holdup time due to wetting would not be significantly influenced by slope. If this is true, then the detectable leak rate varies primarily with the length of the line. Further, since the test data upon which wetting holdup time is based is accurate to only one significant figure, an estimate for the minimum detectable leak rate can be accurate to only one significant figure, i.e., the minimum detectable leak rate $\approx$0.1 gal/hr

2 Objective

This report addresses leak detection capability for all interfacility double-walled underground transfer lines within the WTP.

3 Description

The Preatreatment (PT) facility receives low-activity waste (LAW) feed and high-level waste (HLW) feed from the underground Double-Shell Tank System. This mixed waste feed is pumped through three double-walled underground transfer lines to the PT facility from the Tank Farm Contractor (TFC).

The PT facility pretreats the waste received from the Double-Shell Tank System and pumps it to the LAW vitrification facility through three double-walled underground transfer lines and to the HLW vitrification facility through four double-walled underground transfer lines. Secondary waste from the LAW facility is returned by pumped flow to the PT facility through four lines and by gravity flow from the HLW facility to the PT facility through four lines.

Analytical services are provided to each facility by the Laboratory Facility (LAB). Secondary wastes from the LAB are pumped to the PT facility for treatment and disposal through one double-walled underground transfer line.

Secondary waste is generated within the PT facility and pumped through two double-walled underground transfer lines to the Liquid Effluent Retention Facility (LERF)/Effluent Treatment Facility (ETF).

The regulatory requirements for leak detection are contained in WAC-173-303-640, Tank Systems, Section 4, Containment and Detection of Releases (Ref. 1). The regulatory requirements are restated as follows:

(b) Secondary Containment systems must be:

(ii) Capable of detecting and collecting releases and accumulated liquids until the collected material is removed.

(c) To meet the requirements of (b) of this subsection, secondary containment systems must be at a minimum:

(iii) Provided with a leak detection system that is designed and operated so that it will detect the failure of either the primary or secondary containment structure or the presence of any release of dangerous waste or accumulated liquid in the secondary containment system within twenty-four hours, or at the earliest practicable time if the owner or operator can demonstrate to the department that the existing detection technologies or site conditions will not allow detection of a release within twenty-four hours.

In addition, the Waste Treatment Plant Dangerous Waste Permit (Ref. 2), ID No: DWP-2003-0371, Condition No: III.10.E.9.e.ii requires submittal of:

> Detailed plans and descriptions, demonstrating the leak detection system is operated so that it will detect the failure of either the primary or secondary containment structure or the presence of any release of dangerous and/or mixed waste, or accumulated liquid in the secondary containment system within twenty-four (24) hours. Detection of a leak of at least 0.1 gallons per hour within twenty-four (24) hours is defined as being able to detect a leak within twenty-four (24) hours. Any exceptions to this criteria must be approved by Ecology [WAC 173-303-640(4)(c)(iii), WAC 173-303-806(4)(c)(vii)];

4 Assumptions

Assumptions used for this assessment of underground transfer line leak detection are listed as follows. These assumptions are derived from Ref. 3.

- The liquid leaking is water at a temperature of 100 °F.
- The leak is at a constant rate over the twenty-four hour period.
- The leak is assumed to occur at the farthest point from the leak detection box (LDB).
- No evaporation will occur.
- The liquid does not foam in the LDBs.
- Hold-up in piping will be considered. Hold-up is defined as wetting of the pipe surface. Holdup due to spacers or other desgin features is not considered because. at low flow rates, spacers would not impede flow.
- Level detection instruments will be properly installed and calibrated upon installation. Periodic, normal maintenance and calibration will be performed on level instruments during operation of the facility and the instruments will be maintained in an operable condition.
- Leak detection instruments have not been purchased yet. The purchased unit will have a performance capability of positively detecting the liquid level of ½ inch.

5 Analysis

All underground transfer lines are double-walled pipe containing a 3-inch nominal stainless steel carrier pipe inside a 6-inch nominal carbon steel encasement pipe. All lines except the LERF/ETF lines are

sloped toward the PT facility and the encasements terminate in the LDBs located within the PT facility pipe tunnels. The LERF/ETF lines slope toward the LERF/ETF facility and LDBs are located at the WTP facility boundary. Line slopes are indicated on the piping and instrument diagrams (Ref. 4, 5).

Pipe lengths and slopes are summarized as follows. Pipe lengths include 6 ft of piping to account for the drain portion leading from the encasement pipe to the LDB.

Transfer Line	Number of Lines	Line Length (ft)	Slope (ft/ft) [Ref]
HLW	8	289	1:50 [4]
Tank Farms	3	395	1:200 [4]
LERF/ETF	2	760	1:200 [5]
LAW	7	881	1:200 [5]
LAB	1	1078	1:200 [5]

The leak detection method employs LDBs at the low points of co-axial underground transfer lines in such a way that the outer pipe drains into them in the event that the primary inner pipe leaks. In each of the LDBs is a thermal conductivity type level instrument to detect the leak. There are a total of 19 LDBs within the PT facility servicing lines from the Tank Farms, to and from the HLW Facility, to and from the LAW Facility, and from the LAB Facility. LDBs for the lines to the LERF/ETF lines are located at the WTP facility boundary. Leak detection in secondary containment systems including buried co-axial transfer lines is described in Ref. 6.

6 Detectable Leak Rates

Detectable leak rate is the minimum leak rate that can be detected within 24 hours after the leak starts. As discussed in Section 7, this is primarily driven by the holdup (wetting) in the encasement line because this is a relatively large volume compared to the detectable volume in the LDB. It is believed that holdup time due to wetting would not be significantly influenced by slope. If this is true, then the detectable leak rate varies primarily with the length of the line. Illustration of these relationships are provided in Section 7, Bounding Calculations.

Results of the detectable leak rate analysis for each of the transfer lines, assuming that the leak is at the most remote location from the LDB, are summarized as follows. Note that the leak rates are stated with three significant figure accuracy, whereas the permit criteria (see Section 3) is stated with one significant figure, and test data upon which wetting holdup time is based is accurate to only one significant figure.

Transfer Line	Minimum Leak Rate Detectable Within 24 hours, gallons/hr
HLW	0.034
Tank Farms	0.047
LERF/ETF	0.097
LAW	0.113
LAB	0.141

7 Bounding Calculations

7.1 Methodology

The volume of water from a line leak that is required to accumulate within the transfer line and be detected within the LDB is the sum of three components:

- V_1 is the volume of the liquid (in gallons) which is required to accumulate within the LDB before it is detected by the leak detection instrumentation.
- V_2 is the volume of liquid that is accumulated within the pipe before it reaches the LDB. This is referred to as "holdup" and is the thin film of liquid that wets a small portion of the surface at the bottom of the pipe. This wetting occurs before any liquid is transported to the LDB.
- V_3 is the volume of liquid that is conveyed down the pipe to the leak detector after the pipe is wetted. This volume is based on the length and slope of the pipe.

V_1 is determined by calculating the quantity of liquid in the LDB that is required to trip the detector. This volume is determined from the geometry of the LDB and the assumed depth of liquid. The LDB consists of a 24-inch long section of an 8-in nominal Schedule 40S pipe with 8-inch standard pipe caps welded on each end. Each end cap consists of a straight cylindrical section and a 2:1 semi-ellipsoidal head. The leak detection chamber is isolated from the remainder of the box by a weir that is located 11-inches from one end (measured from the body/cap weld). The minimum quantity of liquid in the LDB that can be detected is based on a depth of liquid of 1/2-inch. The calculation of volume in the LDB involves use of standard handbook formulas for calculating the volumes of a partially filled pipe and the volume of a partially filled 2:1 semi-ellipsoidal head.

V_2, the "wetting" holdup is determined from test results on a 6-inch diameter Schedule 40 carbon steel pipe sloped at 1:400 (Ref. 7). The test results determined that 8 fluid ounces of water was required to wet the bottom of a 25 ft length of pipe (0.32 fluid oz per linear foot) before flow out of the pipe can occur.

$$V_{wet} = 0.32 \frac{oz}{ft}$$

V_2 is calculated by multiplying the quantity (V_{wet}) of liquid that it will take to wet a linear foot of pipe by the total length of the pipe (L).

$$V_2 = \frac{V_{wet} * L}{128} \qquad 1 \text{ gal} = 128 \text{ oz}$$

The flow rate Q_2 in gal/hr is V_2/24 hr, where Q_2 is the flow required to wet the bottom of the pipe in 24 hours.

V_3 is the volume required to "convey" the leaked fluid down the pipe to the leak detector. This component of the flow can be thought of as a thin layer of fluid that is in excess of the quantity of fluid that represents the wetting film (V_2). This component of the flow is a flow boundary layer and is

calculated using the boundary layer theory for uniform flow down an inclined plane. The velocity of flow, u, is determined according to the relationship (Ref. 8):

$$u = \frac{1}{3 * \upsilon}(g * So * d^2) \qquad \text{Equation 7.1}$$

Where u = average flow velocity (ft/sec)
υ = kinematic viscosity (ft^2/sec)
g = gravitational constant (32.17 ft/sec^2)
d = depth of flow (ft)
So = Slope of the incline (dimensionless)

The depth of flow can be found by solving for d

$$d = \sqrt{\frac{3 * \upsilon * u}{g * So}} \qquad \text{Equation 7.2}$$

An initial value for the average flow velocity u is calculated by dividing the pipe length by 24 hours. The depth of flow is then calculated from the above equation; then the cross sectional flow area of the liquid flow is calculated as follows (Ref. 9):

$$A_3 = d * \sqrt{1.766 * D * d - d^2} \qquad \text{Equation 7.3}$$

where D is the inside diameter of the encasement pipe

The boundary layer flow rate Q_3 is calculated as the product of the cross sectional flow area A_3 and the average velocity u.

That is, $Q_3 = A_3 * u$ converted to gal/hr

The flow components Q_2 and Q_3 are added to obtain the total minimum detectable leak rate Q.

The calculation is repeated by adjusting for the time required to activate the leak detection alarm. The activation time is calculated by dividing the volume V_1 by the sum of flow components Q_2 and Q_3. This time is subtracted from 24 hours to calculate a revised average velocity u. Values of d, A_3, and Q_3 are recalculated based on the revised value of u. This iteration procedure is closed when repeatable values of u are calculated. The final sum of flows Q_2, and Q_3 is then the minimum detectable leakage rate in a 24-hour period.

7.2 Bounding Calculation

Using the methodology described in Section 7.1, calculation of the minimum leak rate detected within 24 hours is shown below for the longest line, the LAB transfer line encasement which is 1078 ft in length. Although slope of this transfer line is 1:200, for conservatism, the slope used in the calculation is 1:400, which corresponds to the slope used in the wetting holdup test.

7.2.1 Calculate the LDB Volume Required to Trip the Leak Detector

Using the calculation procedure discussed in Section 7.1, the calculated volume of liquid required to set off the leak detection alarm is determined to be 0.077 gal.

7.2.2 Calculate the Leak Rate Required to Wet the Surface

The component of the leak rate required to wet the surface is calculated as follows.

From the test data, the wetting holdup in the pipe at a 1:400 slope was determined to be 0.32 fluid oz/ft = V_{wet}

L = 1078 ft for the longest line (LAB)

$V_2 = V_{wet} * L / 128 = 2.70$ gal

$Q_2 = V_2/24 = 0.112$ gal/hr

7.2.3 Calculate the Leak Rate Required to Form the Flow Boundary Layer

Determine the component of the flow rate Q_3. This is the uniform flow rate necessary to convey the leakage to the LDB determined using the boundary layer theory for uniform flow on an inclined plane. The boundary layer theory (see Section 7.1) considers the properties of the liquid as well as the slope of the pipe.is the flow required to wet the bottom of the pipe in 24 hours.

Kinematic viscosity, υ, of water at 100F = 7.37E-6 ft^2/sec
Slope, $S_0 = 0.0025$ ft/ft
g = 32.17 ft/sec^2
D = 0.505 ft (inside diameter of encasement)

Equation 7.1 is used to calculate the initial iteration of the average velocity u. Then the first iteration of depth d (using Equation 7.2), the area A3 (using Equation 7.3), and Q3 are calculated. Total leakage rate is then calculated as Q = Q2 + Q3. The time to set off the leak detection alarm in the LDB is calculated as $t = V_1/Q$. This time is subtracted from 24 hours and the velocity u, in ft/sec, adjusted according to u = L/ ((24-t)/3600). Values of d, A3 and Q3 are recalculated until the iterations converge. In the final iteration, Q2 is determined to be 0.115 gal/hr and,

Q = 0.141 gal/hr

Note that the largest portion of the total required leak rate is to satisfy pipe wetting (0.115 gal/hr/0.141 gal/hr) or about 82% of the total flow required. Since the test data upon which wetting holdup time is based is accurate to only one significant figure, an estimate for Q can be accurate to only one significant figure, i.e.,

$Q \approx 0.1$ gal/hr

8 References

1. WAC 173-303, *Dangerous Waste Regulations*, Washington Administrative Code

2. WA 7890008967, *Dangerous Waste Portion of the Hanford Facility Resource Conservation and Recovery Act Permit for the Treatment, Storage, and Disposal of Dangerous, Waste,* Chapter 10 and Attachment 51, "Waste Treatment and Immobilization Plant."

3. CCN 097799, Leak Detection Capability Scope Statement, Revision 6, 8/19/04

4. 24590-PTF-M6-PWD-P0057, Rev 0, P&ID Plant Wash and Disposal System Underground Transfer Lines

5. 24590-PTF-M6-PWD-P0058, Rev. 1, P&ID Plant Wash and Disposal System Underground Transfer Lines

6. 24590-WTP-PER-J-02-002, Rev. 1, *Low Point Leak Detection in Secondary Containment Systems Including Buried Co-Axial Transfer Lines*

7. CCN 093156, Calculation W314-P-039, Rev. 0, "Encasement Leak Detection, " , J.R. Collins, Fluor Daniel Northwest, 10/19/98.

8. Robertson/Crowe, *Engineering Fluid Mechanics,* John Wiley and Sons, Inc., 5th Edition

9. Nayyar, Mohinder L., *Piping Handbook,* Mc-Graw-Hill, 7th Edition

R10591991

Document title: **Flooding Volume for Room P-0150 in the PT Facility**

Contract deliverable number:

ISSUED BY RPP-WTP PDC

Contract number: DE-AC27-01RV14136

Department: Mechanical Systems

Author(s): Lisa Han Dana F. Miller

Principal author signature:

Document number: 24590-PTF-PER-M-04-0008, Rev 1

Checked by: Dave Reinemann

Checker signature:

Date of issue: 11/28/05

Issue status: Issued for Permitting Use

Approved by: Robert Voke

Approver's position: Discipline Production Engineering Manager

Approver signature: for

ERIC B. ISERN
STATE OF WASHINGTON
33449
REGISTERED PROFESSIONAL ENGINEER
11/28/05
EXPIRES: 07/28/07

This bound document contains a total of 13 sheets

River Protection Project
Waste Treatment Plant
2435 Stevens Center Place
Richland, WA 99354
United States of America
Tel: 509 371 2000

Notice

Please note that source, special nuclear, and byproduct materials, as defined in the Atomic Energy Act of 1954 (AEA), are regulated at the US Department of Energy (DOE) facilities exclusively by DOE acting pursuant to its AEA authority. DOE asserts, that pursuant to the AEA, it has sole and exclusive responsibility and authority to regulate source, special nuclear, and byproduct materials at DOE-owned nuclear facilities. Information contained herein on radionuclides is provided for process description purposes only.

History Sheet

Rev	Date	Reason for revision	Revised by
0	4/15/05	Issued for Permitting Use	G. Chiaramonte
1	11/28/05	Issued for Permitting Use. Major Revision.	Lisa Han

Contents

Notice ii
History Sheet iii
Contents iv
Acronyms and Abbreviations v
1 Introduction 1
2 Applicable Documents 1
3 Description 1
3.1 Background 1
3.2 Room P-0150 Flooding Volume 2
3.3 Calculation of the Minimum Height of the Secondary Containment Wall 2
3.4 Results 3

Appendices

Appendix A Evaluation of Flooding Volume for Room P-0150 ..... A-i

Acronyms and Abbreviations

AEA	Atomic Energy Act of 1954
DOE	US Department of Energy
ETF	effluent treatment facility
FRP	feed receipt process
HLP	HLW lag storage and feed blending process
HLW	high-level waste
LAW	low-activity waste
LERF	liquid effluent retention facility
PT	pretreatment
PWD	plant wash and disposal
RLD	radioactive liquid waste disposal
WAC	Washington Administrative Code

1 Introduction

The Washington Administrative Code, WAC 173-303-640(4)(e), addresses tank systems containing dangerous waste. This code requires that secondary containment systems be designed to contain 100 % of the capacity of the largest tank within its boundary. Because the tank system addressed in this document is in an outdoor uncovered area, also included is the containment of the rainfall.

Flooding scenarios for rooms within the PT facility have been addressed in prior issued documents. This report specifically addresses flooding scenarios for Room P-0150, a tank containment area located outside the PT building, which contains the Radioactive Liquid Waste Disposal (RLD) tanks RLD-TK-00006A and RLD-TK-00006B. The flooding scenario addressed in this document establishes the minimum requirements for secondary containment in Room P-0150.

2 Applicable Documents

WAC 173-303, *Dangerous Waste Regulations*, Washington Administrative Code

3 Description

3.1 Background

The PT facility receives low-activity waste (LAW) feed and high-level waste (HLW) feed from the Double-Shell Tank System. This mixed waste feed is pumped through double-walled underground transfer lines to the PT facility.

The purpose of the PT facility is to pretreat the waste received from the Double-Shell Tank System and to transfer it to the LAW and the HLW vitrification facilities. Within the LAW and HLW vitrification facilities, the waste is formed into glass logs suitable for long-term disposal.

Within the PT facility, the LAW feed is transferred to the waste feed receipt process (FRP) vessels (FRP-VSL-00002A/B/C/D), while the HLW feed is sent to the HLW feed receipt vessel (HLP-VSL-00022). These wastes are temporarily stored in the vessels before being pumped and treated by the PT processing equipment.

These vessels are located in black cells and are not accessible. The black cells are arranged in a "U" shape around a central hot cell in the PT facility, where major processing equipment is located.

The hot cell is remotely maintainable with the use of a crane system. Below the center of the hot cell are two adjacent rooms in the deep pit at the -45 ft elevation. This is the low point for the PT facility. Within these rooms are the plant wash and disposal (PWD) ultimate overflow vessel (PWD-VSL-00033) and the HLW effluent transfer vessel (PWD-VSL-00043).

The FRP vessels are the largest in the PT facility. The flood scenario at 0 ft elevation addressed a postulated failure of one FRP vessel and the movement of its fluid from a black cell to the hot cell, and then to the -45 ft elevation pit in *Flooding Volume for Below Grade and 0 Ft Elevation in PT Facility*

(24590-PTF-PER-M-02-005). The flooding scenario also addressed the fire water pit at the -19 ft elevation.

The RLD tanks RLD-TK-00006A and RLD-TK-00006B, located in Room P-0150 (a concrete containment area) outside of the PT building, receive, sample, and discharge low activity effluent. The majority of the inventory contained in these tanks is process condensate generated in the PT facility evaporators, but these tanks also receive and store alkaline scrubber and other low activity liquids routed from RLD-VSL-00017A/B located in the PT facility. Liquid effluents stored in RLD-TK-00006A/B are pumped to the Liquid Effluent Retention Facility (LERF) and Effluent Treatment Facility (ETF) for further treatment prior to disposal.

3.2 Room P-0150 Flooding Volume

Room P-0150 is a concrete containment area located outside the PT building on the northeast side of the building. It provides secondary containment for tanks RLD-TK-00006A/B, which are the only tanks within this containment area. The room is completely enclosed by the walls and there is no overhead covering or roof.

Each tank sits on a pedestal that is octagonal in shape. Also located in this room are six pumps on individual pedestals, with associated piping. There are 12 concrete posts in the room. The secondary containment includes a low point sump (RLD-SUMP-00003). The floor of the containment area also includes a covered trench between each tank and a sump. The floor and the trench are sloped towards the sump. The room's concrete walls and floor are provided with a special protective coating to contain liquid in case of leakage. For simplicity, these walls and the floor will be referred to as the "secondary containment".

The minimum height for the secondary containment is based on the flooding volume. The basic methodology used to calculate the minimum secondary containment height is to divide resulting volume by the available room area. The available room area is reduced by the area of the tank and pump pedestals. The height of the secondary containment is determined from the top of the floor but for conservatism, no credit is taken for the volume created by the slope of the floor.

3.3 Calculation of the Minimum Height of the Secondary Containment Wall

For calculating the minimum height of the secondary containment walls, the following scenario is considered.

The total volume of the fluid contained in one of the two tanks is discharged by leakage or spillage into the secondary containment. Added to this volume of fluid is the maximum accumulation of rainwater for duration of 24 hours. Refer to Appendix A for basis of rainwater. Therefore, the secondary containment wall is sized to handle the volume of rainwater in addition to the 100 % capacity of the tank.

The secondary containment is calculated in three parts:

Part 1 Determination of Flooding Volume

a) Determine the volume of the tank (V_{tank}) by adding the sum of the volumes of the cylindrical section and the cone roof section. The volume of the entire conical section is included with the cylindrical section volume for conservatism.

b) Determine the volume of the rainwater (V_w) for the area of the room.

c) Determine the total flooding volume (V_{flood}) by adding V_{tank} and V_w.

Part 2 Allowance for Other Components

a) To account for space that is unavailable due to other auxiliary components (piping and structural posts) in the room, a design allowance of 5 % is added to V_{flood}.

b) The volume of sump RLD-SUMP-00003 (78 cu ft) is considered negligible compared to V_{flood} (calculated in Appendix A).

c) The liquid in the failed tank empties or leaks down to the secondary containment height, as the liquid level equalizes. This assumption also applies to a failed nozzle or pipe connected to the bottom of the tank. The flood volume will occupy the area of the failed tank.

Part 3 Determination of Containment Height

The minimum height of the secondary containment wall is calculated incrementally, taking into account the tank pedestals, the pumps, and the results from Parts 1 and 2 above.

Step 1. Calculate the area of available secondary containment up to the thickest part of the tank pedestal, 1 ft 4 in. This step subtracts the tank pedestals and the six pumps from the available area. The tank pedestals are conservatively assumed flat (not sloped) and with an area assumed 25 % larger than the tank footprint. The pumps are conservatively considered rectangular shapes, using the cross-sectional area of the largest concrete pump pedestal. The area determined by this step can be multiplied by 1 ft 4 in to get the volume of liquid contained by the 1 ft 4 in high containment wall section.

Step 2. The available area of the room in this step is the (area of the room) minus (area of remaining intact tank) minus (area of the six pumps).

Calculate the additional height of the secondary containment wall (above the first 1 ft 4 in) required to accommodate the remaining V_{flood} by: subtracting the volume calculated in Step 1, from V_{flood}, and dividing by the available area of the room (in this step above).

Step 3: To determine the minimum secondary containment wall height, add the heights from Step 1 and Step 2 above.

3.4 Results

The minimum secondary containment height required is 7.27 ft above the top of the concrete floor.

Appendix A

Evaluation of Flooding Volume for Room P-0150

Appendix A
Evaluation of Flooding Volume for Room P-0150

Description

Room P-0150 is a concrete containment area located outside the PT building on the northeast side of the building. It provides secondary containment for tanks RLD-TK-00006A/B, which are the only tanks within this containment area. The secondary containment includes low point sump (RLD-SUMP-00003). The floor of the containment area also includes a covered trench between each tank and RLD-SUMP-00003. The floor and interior walls of the containment area including the trench are treated with a special protective coating. The floor and the trench are sloped towards the sump.

This evaluation determines the flooding volume for Room P-0150 and determines the minimum height for the secondary containment structure.

Basis and Assumptions

- The dimensions of Room P-0150 are 113 ft by 77 ft (inside dimensions).
- The dimensions of both RLD-TK-00006A and -00006B are 42 ft inside diameter by 32 ft tall (cylindrical section).
- The thickness of each tank wall is assumed to be 1 inch, therefore the outside diameter will be 42 ft 2 in or 42.17 ft.
- The tanks are flat bottom and each tank contains a cone roof with a center height of 42 inches measured from the top of the cylindrical section.
- The tank pedestals are octagonal and are assumed 25 % larger than the footprint of the tank.
- The volume of RLD-SUMP-00003 is 583 gallons (78 cu ft) and is considered negligible.
- The trenches in the concrete floor are not credited in this flooding volume for conservative purposes.
- The six pump pedestals are conservatively considered rectangular, each with a cross-sectional area equal to that of the largest pump pedestal and the height equal to the containment wall.
- The 24 hour rainfall is 1.27 inches (a 24-hour, 25 year storm, i.e. the storm that occurs once in 25 years.) Rainfall data is derived from Table 7.3 of PNNL 14242, *Hanford Site Climatological Data Summary, 2002 with Historical Data.* The volume of rain for 24 hrs is conservatively estimated.
- To account for room area that is unavailable due to other auxiliary components (piping and structural posts) in the room, a design allowance of 5 % is added to total flood volume.
- The liquid level of the failed tank empties or leaks down to a wall height, where the liquid level equalizes between the outside and inside of the tank. The area of the failed tank is included in the available area of the room. This assumption also applies to a failed nozzle or pipe connected to the bottom of the tank.
- Numbers in excess of 4 significant figures were rounded to the nearest integer.

Determination of Flood Volume

From the dimensions of RLD-TK-00006A/B (both tanks are the same size), the tank volume contribution to flooding volume, V_{tank}, is the sum of the volume of the straight cylindrical section V_{cyl} plus the volume of the cone roof, V_{cone}:

$$V_{tank} = V_{cyl} + V_{cone}$$

$$V_{cyl} = \pi/4 \times D_{tank}^2 \times H_{cyl}$$

Where:

D_{tank} = Tank diameter, feet = 42 ft

H_{cyl} = Tank cylindrical height, feet = 32 ft

Then

$$V_{cyl} = \pi/4 \times (42 \text{ ft})^2 \times (32 \text{ ft}) = 44{,}334 \text{ cu ft}$$

$$V_{cone} = \pi/12 \times D_{tank}^2 \times H_{cone}$$

Where H_{cone} = height of the conical section measured in the tank center from the top of the cylindrical section = 42 inches

Then

$$V_{cone} = \pi/12 \times (42)^2 \text{ sq ft} \times (42 \text{ in}/12 \text{ in/ft})$$

$$V_{cone} = 1616 \text{ cu ft}$$

$$V_{tank} = 44{,}334 \text{ cu ft} + 1616 \text{ cu ft} = 45{,}950 \text{ cu ft}$$

To determine the volume of rainwater, the total room area, A_t, is determined from:

$$A_t = L_r \times W_r$$

Where:

L_r = room length, ft = 113 ft

W_r = room width, ft = 77 ft

A_t = 113 ft x 77 ft = **8701 sq ft**

Then, the volume of rainwater, V_w, is given by:

$$V_w = (1.27 \text{ inches}/12 \text{ inches/ft}) \times 8701 \text{ sq ft}$$

$$V_w = 921 \text{ cu ft}$$

The flooding volume, V_{flood}, is the sum of these quantities plus 5 % to allow for auxiliary components (such as piping and posts):

$V_{flood} = (V_{tank} + V_w) \times 1.05$

$V_{flood} = (45{,}950 \text{ cu ft} + 921 \text{ cu ft}) \times 1.05$

$V_{flood} = (46{,}871 \text{ cu ft}) \times 1.05 =$ **49,215 cu ft**

Determination of Containment Height

As stated in the method section, for conservatism, the volume created within the sloped area of the floor is neglected.

The pump pedestal dimensions, six each, are as follows: 3.5 ft by 7 ft.

The pumps are conservatively considered to occupy the space above the pump pedestals to the height of the secondary containment wall.

The room dimensions are 113 ft by 77 ft.

Step 1: Secondary Containment Volume (Vc_1) from floor level (0 ft) to top of tank pedestal (1.33 ft).

The secondary containment area has two tank pedestals that are 1.33 ft high. The area of each pedestal is assumed to be 25 % larger than the footprint of the tank.

Cross sectional area of octagonal tank pedestal is conservatively assumed as:

$A_{ped} = A_{tank,\,out} \times 1.25$ where

$A_{tank,\,out} = (\pi/4 \times D_{tank,\,out}^2)$

$A_{tank,\,out} = \pi/4 \times (42.17 \text{ ft})^2 = 1397 \text{ sq ft}$

$A_{ped} = 1397 \text{ sq ft} \times 1.25 = 1746 \text{ sq ft}$

Total cross sectional area of the room is the length of the room times the width of the room:

$A_t = L_r \times W_r$

$A_t = 113 \text{ ft} \times 77 \text{ ft} = 8701 \text{ sq ft}$

Cross sectional area of pumps:

$A_{pump} = 3.5 \text{ ft} \times 7 \text{ ft} = 24.5 \text{ sq ft}$

Area of the room available for secondary containment up to 1.33 ft height is:

$Ac_1 = [A_t - 2A_{ped} - 6A_{pump}]$

$Ac_1 = [8701 \text{ sq ft} - 2(1746 \text{ sq ft}) - 6(24.5 \text{ sq ft})]$

$Ac_1 = 8701 \text{ sq ft} - 3492 \text{ sq ft} - 147 \text{ sq ft} = 5062 \text{ sq ft}$

Volume of liquid contained by 1.33 ft high secondary containment wall is:

$Vc_1 = Ac_1 \times H_1$

$Vc_1 = 5062 \text{ sq ft} \times 1.33 \text{ ft} =$ **6732 cu ft**

Step 2: The height of the secondary containment wall required to accommodate the remaining total tank volume (above the first 1.33 ft).

This wall height (H_2) is determined by subtracting the volume contained in the first 1.33 ft from the total flooding volume and dividing by the available cross sectional area of this space.

$Vc_2 = V_{flood} - Vc_1$

$Vc_2 = 49{,}215 \text{ cu ft} - 6732 \text{ cu ft} = 42{,}483 \text{ cu ft}$

The available cross sectional area for this space is:

$Ac_2 = A_t - A_{tank,\,out} - 6(A_{pump})$

$Ac_2 = 8701 \text{ sq ft} - 1397 \text{ sq ft} - 6(24.5 \text{ sq ft})$

$Ac_2 = 8701 \text{ sq ft} - 1397 \text{ sq ft} - 147 \text{ sq ft} = 7157 \text{ sq ft}$

Therefore:

$H_2 = Vc_2 / Ac_2$

$H_2 = 42{,}483 \text{ cu ft} / 7157 \text{ sq ft} = 5.94 \text{ ft}$

Step 3: Minimum secondary containment wall height H_{min}.

Secondary containment wall required to accommodate the total flooding volume is 1.33 ft plus the height calculated in step 2.

$H_{min} = 1.33 \text{ ft} + H_2$

$H_{min} = 1.33 \text{ ft} + 5.94 \text{ ft} =$ **7.27 ft**

Attachment 2
05-ED-100

Bechtel National, Inc. and U.S. Department of Energy,
Office of River Protection Certification Statements

Bechtel National, Inc. Certification

The following certification statement is provided consistent with Contract No. DE-AC27-01RV14136, Section H.26, Environmental Permits, paragraph (g) for Dangerous Waste Permit package PTF-065, Rev. 0, "Tank Secondary Containment for PTF Facility RLD System."

I certify under penalty of law that this document and all attachments were prepared under my direction or supervision in accordance with a system designed to assure that qualified personnel properly gather and evaluate the information submitted. Based on my inquiry of the person or persons who manage the system, or those persons directly responsible for gathering the information, the information submitted is, to the best of my knowledge and belief, true, accurate, and complete. I am aware that there are significant penalties for submitting false information, including the possibility of fine and imprisonment for knowing violations.

J. P. Henschel

J. P. Henschel
Project Director

11/30/05
Date

U.S. Department of Energy, Richland Operations Office Certification

The following certification statement is provided for the Hanford Tank Waste Treatment and Immobilization Plant for Dangerous Waste Permit package PTF-065, Rev. 0, "Tank Secondary Containment for PTF Facility RLD System."

I certify under penalty of law that this document and all attachments were prepared under my direction or supervision in accordance with a system designed to assure that qualified personnel properly gather and evaluate the information submitted. Based on my inquiry of the person or persons who manage the system, or those persons directly responsible for gathering the information, the information submitted is, to the best of my knowledge and belief, true, accurate, and complete. I am aware that there are significant penalties for submitting false information, including the possibility of fine and imprisonment for knowing violations.

Roy J. Schepens — 11/30/05

R. J. Schepens, Manager
U.S. Department of Energy,
Office of River Protection

Date

R10207837

Document title: **Flooding Volume for 56 Ft Level in PT Facility**

Contract number: DE-AC27-01RV14136

Department: Mechanical Systems

Author(s): D Reinemann

ISSUED BY
RPP-WTP PDC
JC 3/25/04
INIT DATE

Principal author signature: D R Reinemann

Document number: 24590-PTF-PER-M-04-001, Rev 0

Checked by: R Stevens

Checker signature: R.E. Stevens

Date of issue: 25 March 2004

Issue status: Issued for Permitting Use

Approved by: S Grabowski

Approver's position: Area Project Engineering Manager

Approver signature: S. Grabowski

MARK W. HOFFMANN
STATE OF WASHINGTON
0030952
REGISTERED
PROFESSIONAL ENGINEER
3/24/04
EXPIRES 12/10/04

This bound document contains a total of 8 sheets

River Protection Project
Waste Treatment Plant
2435 Stevens Center Place
Richland, WA 99352
United States of America
Tel: 509 371 2000

Notice

Please note that source, special nuclear, and byproduct materials, as defined in the Atomic Energy Act of 1954 (AEA), are regulated at the US Department of Energy (DOE) facilities exclusively by DOE acting pursuant to its AEA authority. DOE asserts that, pursuant to the AEA, it has sole and exclusive responsibility and authority to regulate source, special nuclear, and byproduct materials at DOE-owned nuclear facilities. Information contained herein on radionuclides is provided for process description purposes only.

History Sheet

Rev	Date	Reason for revision	Revised by
0	03/25/2004	Issued for Permitting Use	D. Reinemann

Contents

Notice ii
History Sheet iii
Acronyms and Abbreviations v
1 Introduction 1
2 Applicable Documents 1
3 Description 1
3.1 Elevation 56 Ft 2

Acronyms and Abbreviations

AEA	Atomic Energy Act of 1954
CNP	cesium nitric acid recovery process
DOE	US Department of Energy
FEP	feed evaporation process
FRP	feed receipt process
HLP	HLW lag storage and feed blending process
HLW	high-level waste
LAW	low-activity waste
PT	pretreatment
PWD	plant wash and disposal
TLP	treated LAW evaporation process
WAC	Washington Administrative Code

1 Introduction

The Washington Administrative Code, WAC 173-303-640(4)(e), addresses tank systems containing dangerous waste. This code requires that secondary containment systems be designed to contain 100 % of the capacity of the largest tank within its boundary. Also included in this report is the containment of the fire water discharge, where applicable, within the boundary of the secondary containment.

This report specifically addresses flooding scenarios to be contained within the pretreatment (PT) facility for 56 ft elevation and establishes the minimum requirements for secondary containment.

2 Applicable Documents

WAC 173-303, *Dangerous Waste Regulations*, Washington Administrative Code

3 Description

The PT facility receives low-activity waste (LAW) feed and high-level waste (HLW) feed from the Double-Shell Tank System. LAW feed and HLW feed are pumped through double-walled underground transfer lines to the PT facility.

The purpose of the PT facility is to pretreat the waste received from the Double-Shell Tank System and to transfer it to the LAW and the HLW vitrification facilities. Within the LAW and HLW vitrification facilities, the waste is formed into glass logs suitable for long-term disposal.

Within the PT facility, the LAW feed is transferred to the waste feed receipt process (FRP) vessels (FRP-VSL-00002A/B/C/D), while the HLW feed is sent to the HLW feed receipt vessel (HLP-VSL-00022). These wastes are temporarily stored in the vessels before being pumped and treated by the PT processing equipment.

These vessels are located in black cells and are not accessible. The black cells are arranged in a "U" shape around a central hot cell in the PT facility, where major processing equipment is located.

The hot cell is remotely maintainable with the use of a crane system. Below the center of the hot cell are 2 adjacent rooms in the deep pit at the -45 ft elevation. This is the low point for the PT facility. Within these rooms are the plant wash and disposal (PWD) ultimate overflow vessel (PWD-VSL-00033) and the HLW effluent transfer vessel (PWD-VSL-00043).

The FRP vessels are the largest in the PT facility. The flood scenario at 0 ft elevation addressed a postulated failure of 1 FRP vessel and the movement of its fluid from a black cell to the hot cell, and then to the -45 ft elevation pit in *Flooding Volume for PT Facility* (24590-PTF-PER-M-02-005). The flooding scenario also addressed the fire water pit at the -19 ft elevation.

The flood scenario at 28 ft elevation addressed discharge of fire protection equipment in *Flooding Volume for 28 Ft Level in PT Facility* (24590-PTF-PER-M-001).

This document addresses areas at the 56 ft elevation for secondary containment.

3.1 Elevation 56 Ft

3.1.1 Rooms P-0301, P-0302, P-0303, P-0303B, P-0304, P-0307, P-0311, P-0317, P-0320, P-0324, P-0325, P-0326, P-0332B, P-0335, and P-0336

There are no regulated tanks or vessels located on the 56 ft elevation in this facility.

Rooms P-0301, P-0302, P-0303, and P-0336 are located in the south side of the PT facility and contain regulated bulges and various items of regulated system ancillary equipment.

Rooms P-0303B and P-0307 are located in the west side of the PT facility and contain regulated bulges and various items of regulated system ancillary equipment.

Room P-0304 is located in the south side of the PT facility and contains regulated miscellaneous units for the waste feed evaporation system. The waste feed evaporator primary condensers (FEP-COND-00001A, FEP-COND-00001B), waste feed evaporator intercondensers (FEP-COND-00002A, FEP-COND-00002B), waste feed evaporator aftercondensers (FEP-COND-00003A, FEP-COND-00003B), and various items of regulated system ancillary equipment are located in this cell.

Room P-0311 is located in the north side of the PT facility and contains regulated bulges and various items of regulated system ancillary equipment.

Rooms P-0317 and P-0324 are located on top of the hot cell and contain regulated bulges and various items of regulated system ancillary equipment.

Room P-0320 is located in the north side of the PT facility and contains a regulated miscellaneous unit for the cesium nitric acid recovery system. The cesium evaporator nitric acid rectifier (CNP-DISTC-00001) and various items of regulated system ancillary equipment are located in this cell.

Room P-0325 is located in the north side of the PT facility and contains regulated miscellaneous units for the treated LAW evaporation system. The treated LAW evaporator primary condenser (TLP-COND-00001), treated LAW evaporator intercondenser (TLP-COND-00002), treated LAW evaporator aftercondenser (TLP-COND-00003), and various items of regulated system ancillary equipment are located in this cell.

Floor drains are provided to direct any potential leakage or spillage from the ancillary equipment in the above regulated areas to the C3 floor drain collection vessel (PWD-VSL-00046). A curb has been provided at the walls between the dangerous waste regulated and non-regulated areas to prevent waste migration from regulated areas to C2 areas. Entries to containment areas have drainage trenches immediately in front of them to prevent firewater or other material from flowing into C2 areas.

The flood volume for these regulated areas is based principally on the discharge of the fire protection sprinkler system with only minimal contribution from leakage of ancillary equipment and miscellaneous treatment units. Therefore, no formal calculation for flood height is provided in this document. The floor drains and curbs are sized for 20 minutes of fire sprinkler water. The floor and curbing for the regulated areas are lined with a special protective coating to a minimum height of 3 inches.

Room P-0326 is located on top of the hot cell and contains a regulated miscellaneous unit for the pretreatment vessel vent process system. The after cooler (PVP-CLR-00001) is located in this cell. This

unit normally operates with a dry process stream and has localized containment to confine any potential leakage or spillage.

Room P-0332B is located in the east side of the PT facility and contains various items of regulated system ancillary equipment. A C5 floor drain is provided to direct any potential leakage or spillage from the ancillary equipment to the ultimate overflow vessel (PWD-VSL-00033).

Room P-0335, the filter cave room, is an inaccessible C5 area located on the south side of the PT facility and contains regulated miscellaneous units for the pretreatment vessel vent process system and the pulse jet ventilation system. The high efficiency mist eliminators (PVP-HEME-00001A, PVP-HEME-00001B, and PVP-HEME-00001C) and the demisters (PJV-DMST-0002A, PJV-DMST-0002B, and PJV-DMST-0002C) are located within this cell. These units are contained within separate concrete bermed areas lined with stainless steel. Each bermed area has a C5 floor drain to direct any potential leakage or spillage from the ancillary equipment to the ultimate overflow vessel (PWD-VSL-00033). Each drain is equipped with leak detection instrumentation.

Attachment 51 – Appendix 8.9
Pretreatment Building
Material Selection Documentation

Where information regarding treatment, management, and disposal of the radioactive source, byproduct material, and/or special nuclear components of mixed waste (as defined by the Atomic Energy Act of 1954, as amended) has been incorporated into this permit, it is not incorporated for the purpose of regulating the radiation hazards of such components under the authority of this permit and chapter 70.105 RCW. In the event of any conflict between Permit Condition III.10.A. and any statement relating to the regulation of source, special nuclear, and byproduct material contained in portions of the permit application that are incorporated into this permit, Permit Condition III.10.A. will prevail.

Additional appendices will be added to this appendix as new information is incorporated into this permit.

Drawings and Documents

Attachment 51 – Appendix 8.9
Pretreatment Building
Material Selection Documentation

The following drawings have been incorporated into Appendix 8.9 and can be viewed at the Ecology Richland Office. See Appendix 7.9 for material selection documentation common to the Pretreatment, LAW, HLW, and Laboratory buildings. **New drawings are in bold lettering.**

Drawing/Document Number	**Description**
24590-PTF-N1D-CNP-P0001, Rev 0	Material Selection Data Sheet for CNP-DISTC-00001
24590-PTF-N1D-CNP-P0002, Rev 1	Material Selection Data Sheet for CNP-HX-00002
24590-PTF-N1D-CNP-P0003, Rev 1	Material Selection Data Sheet for CNP-HX-00003
24590-PTF-N1D-CNP-P0004, Rev 1	Material Selection Data Sheet for CNP-HX-00001
24590-PTF-N1D-CNP-P0005, Rev 1	Material Selection Data Sheet for CNP-EVAP-00001
24590-PTF-N1D-CNP-P0006, Rev 3	Material Selection Data Sheet for CNP-VSL-00004
24590-PTF-N1D-CNP-P0008, Rev 1	Material Selection Data Sheet for CNP-BRKPT-00002
24590-PTF-N1D-CNP-P0009, Rev 1	Material Selection Data Sheet for CNP-VSL-00003
24590-PTF-N1D-CNP-P0010, Rev 1	Material Selection Data Sheet for CNP-BRKPT-00001
24590-PTF-N1D-CNP-P0011, Rev 1	Material Selection Data Sheet for CNP-VSL-00001
24590-PTF-N1D-CNP-P0012, Rev 1	Material Selection Data Sheet for CNP-HX-00004
24590-PTF-N1D-CXP-P0001, Rev 1	Material Selection Data Sheet for CXP-VSL-00001
24590-PTF-N1D-CXP-P0003, Rev 1	Material Selection Data Sheet for CXP-VSL-00026A/B/C
24590-PTF-N1D-CXP-P0007, Rev 1	Material Selection Data Sheet for CXP-VSL-00004
24590-PTF-N1D-CXP-P0008, Rev 1	Material Selection Data Sheet for CXP-VSL-00005
24590-PTF-N1D-FEP-P0002, Rev 1	Material Selection Data Sheet for FEP-VSL-00017A/B
24590-PTF-N1D-FEP-P0003, Rev 1	Material Selection Data Sheet for FEP-VSL-00005
24590-PTF-N1D-FEP-P0007, Rev 1	Material Selection Data Sheet for FEP-SEP-00001A/B
24590-PTF-N1D-FEP-P0008, Rev 0	Material Selection Data Sheet for FEP-RBLR-00001A/B
24590-PTF-N1D-FEP-P0009, Rev 0	Material Selection Data Sheet for FEP-COND-00002A/B
24590-PTF-N1D-FEP-P0010, Rev 0	Material Selection Data Sheet for FEP-COND-00003A/B
24590-PTF-N1D-FEP-P0013, Rev 0	Material Selection Data Sheet for FEP-COND-00001A/B
24590-PTF-N1D-FRP-P0001, Rev 2	Material Selection Data Sheet for FRP-VSL-00002A-D
24590-PTF-N1D-HLP-P0001, Rev 0	Material Selection Data Sheet for HLP-BRKPT-00004/6
24590-PTF-N1D-HLP-P0003, Rev 1	Material Selection Data Sheet for HLP-VSL-00022
24590-PTF-N1D-HLP-P0007, Rev 1	Material Selection Data Sheet for HLP-VSL-00027A/B
24590-PTF-N1D-HLP-P0010, Rev 1	Material Selection Data Sheet for HLP-VSL-00028
24590-PTF-N1D-PJV-P0001, Rev 1	Material Selection Data Sheet for PJV-VSL-00002
24590-PTF-N1D-PVP-P0001, Rev 1	Material Selection Data Sheet for PVP-SCB-00002
24590-PTF-N1D-PVP-P0002, Rev 1	Material Selection Data Sheet for PVP-VSL-00001
24590-PTF-NID-PWD-P0001, Rev 1	Material Selection Data Sheet for PWD-VSL-00044
24590-PTF-N1D-PWD-P0002, Rev 1	Material Selection Data Sheet for PWD-VSL-00043
24590-PTF-N1D-PWD-P0003, Rev 3	Material Selection Data Sheet for PWD-VSL-00015/16
24590-PTF-N1D-PWD-P0005, Rev 2	Material Selection Data Sheet for PWD-VSL-00033
24590-PTF-N1D-PWD-P0006, Rev 2	Material Selection Data Sheet for PWD-VSL-00046

Drawing/Document Number	**Description**
24590-PTF-N1D-PWD-P0007, Rev 0	Plant Item Material Selection Data Sheet for PWD-BRKPT-00007/8/9/10/17/19
24590-PTF-N1D-PWD-P0008, Rev 1	Material Selection Data Sheet for PWD-BRKPT-00015/16
24590-PTF-N1D-RDP-P0001, Rev 2	Material Selection Data Sheet (for RDP-VSL-00002A/B/C
24590-PTF-N1D-RDP-P0002, Rev 0	Material Selection Data Sheet for RDP-VSL-00004
24590-PTF-N1D-RLD-P0002, Rev 2	Material Selection Data Sheet for RLD-VSL-00017A/B
24590-PTF-N1D-TCP-P0001, Rev 2	Material Selection Data Sheet for TCP-VSL-00001
24590-PTF-N1D-TLP-P0001, Rev 2	Material Selection Data Sheet for TLP-VSL-00009A/B
24590-PTF-N1D-TLP-P0002, Rev 0	Material Selection Data Sheet for TLP-COND-00001
24590-PTF-N1D-TLP-P0003, Rev 0	Material Selection Data Sheet for TLP-COND-00002/3
24590-PTF-N1D-TLP-P0005, Rev 3	Material Selection Data Sheet for TLP-SEP-00001
24590-PTF-N1D-TLP-P0006, Rev 1	Material Selection Data Sheet for TLP-VSL-00002
24590-PTF-N1D-TLP-P0011, Rev 1	Material Selection Data Sheet for TLP-RBLR-00001
24590-PTF-N1D-UFP-P0001, Rev 2	Material Selection Data Sheet for UFP-BRKPT-00001A/B
24590-PTF-N1D-UFP-P0002, Rev 2	Material Selection Data Sheet for UFP-PP-00001, 2, 3A/B
24590-PTF-N1D-UFP-P0003, Rev 0	Material Selection Data Sheet for UFP-VSL-00002A/B
24590-PTF-N1D-UFP-P0004, Rev 3	Material Selection Data Sheet for UFP-FILT-00001, 2, 3A/B
24590-PTF-N1D-UFP-P0005, Rev 2	Material Selection Data Sheet for UFP-VSL-00001A/B
24590-PTF-N1D-UFP-P0008, Rev 2	Material Selection Data Sheet for UFP-VSL-00062A/B/C
RESERVED	RESERVED

PLANT ITEM MATERIAL SELECTION DATA SHEET

R10378333

ISSUED BY
RPP-WTP PDC

CNP-DISTC-00001 (PTF)
Cs Evaporator Nitric Acid Rectifier

- Design Temperature (°F)(max/min): 250/40
- Design Pressure (psig) (internal/external): 50/15
- Location: out cell

Design temperature and pressure information is considered bounding and to be confirmed by Vendor.

Contents of this document are Dangerous Waste Permit affecting

Operating conditions are as stated on sheets 5 and 6

Can be maintained, not replaced, during the 40 y design life. No method of totally removing solids or heel is present.

Operating Modes Considered:

- The vessel is at the stated pH at the normal operating temperature.

Materials Considered:

Material (UNS No.)	Relative Cost	Acceptable Material	Unacceptable Material
Carbon Steel	0.23		X
304L (S30403)	1.00		X
316L (S31603)	1.18		X
6% Mo (N08367/N08926)	7.64	X	
Alloy 22 (N06022)	11.4	X	
Ti-2 (R50400)	10 1	X	

Recommended Material: UNS N08367/N08926

Recommended Corrosion Allowance: 0.04 inch (includes 0.00 inch erosion allowance)

Process & Operations Limitations:

- None

MARK W. HOFFMANN
STATE OF WASHINGTON
0030952
REGISTERED
PROFESSIONAL ENGINEER
9/15/04
EXPIRES 12/10/04

Please note that source, special nuclear and byproduct materials, as defined in the Atomic Energy Act of 1954 (AEA), are regulated at the U.S. Department of Energy (DOE) facilities exclusively by DOE acting pursuant to its AEA authority. DOE asserts, that pursuant to the AEA, it has sole and exclusive responsibility and authority to regulate source, special nuclear, and byproduct materials at DOE-owned nuclear facilities. Information contained herein on radionuclides is provided for process description purposes only.

This bound document contains a total of 6 sheets.

REV	DATE	REASON FOR REVISION	PREPARER	CHECKER	APPROVER
0	9/8/04	Issued for Permitting Use			

PLANT ITEM MATERIAL SELECTION DATA SHEET

Corrosion Considerations:

Nitric acid vapor enters CNP-DISTC-00001 where water is separated from the acid. The CNP-DISTC-00001 (bottom of column) should be approximately 0.5M nitric acid.

a General Corrosion
Wilding and Paige (1976) have shown that in 5% nitric acid with 1000 ppm fluoride at 290 °F, the corrosion rate of 304L can be kept as low as 5 mpy by the use of Al^{+++}. Additionally, Sedriks (1996) has noted with 10% (≈2N) nitric acid and 3,000 ppm fluoride at 158 °F, the corrosion rate of 304L is over 4,000 mpy; AL6XN has a rate of about 2 mpy; and C-22 or equivalent has a corrosion rate of about 1 5 mpy. The presence of Al^{+++} is expected to reduce the corrosion rate to near zero. However, the expected conditions indicate no Al^{+++} is present At the temperature, pH and halide concentrations stated, an alloy more corrosion resistant than the 300 series stainless steels will be required. 6% Mo alloy is recommended.

Conclusion:
A 6% Mo alloy or better is recommended.

b Pitting Corrosion
Chloride is known to cause pitting in acid and neutral solutions. Normally the vessel is to operate at between 115 and 140 °F at a pH of 0.3. Extrapolating from Wilding & Paige data (1976), it appears that 304L would not pit due to the presence of the nitric acid and excess nitrate Berhardsson et al (1981) have similar conclusions based solely on concentrations Because of the presence of deposits in acidic conditions and the possible localized concentration of halides due to the rectification process, 304L and 316L would be insufficient and a 6% Mo alloy is the minimum recommended.

Conclusion:
A 6% Mo alloy is recommended.

c End Grain Corrosion
Not believed to be applicable to this system.

Conclusion:
Not applicable to this system.

d Stress Corrosion Cracking
The exact amount of chloride required to stress corrosion crack stainless steel is unknown. In part this is because the amount varies with temperature, metal sensitization, and the environment. But it is also unknown because chloride tends to concentrate under heat transfer conditions, by evaporation, and electrochemically during a corrosion process. Hence, even as little as a few ppm can lead to cracking under some conditions. Generally, as seen in Sedriks (1996) and Davis (1987), stress corrosion cracking does not usually occur below about 140 °F. Further, the use of "L" grade stainless reduces the opportunity for sensitization. However, because of the likelihood that halides will concentrate, 6% Mo alloy or equivalent is required.

Conclusion:
The minimum alloy recommended is 6% Mo or equivalent.

e Crevice Corrosion
For the most part, comments under Pitting also apply here. The stated conditions indicate that 316L might be acceptable when no deposits are allowed to form, but it is expected that deposits will remain. Further, it is anticipated that the design of the column will create crevices and crevice corrosion is a concern. A more resistant alloy, such as a 6% Mo or better, is required.

Conclusion:
6% Mo is recommended.

f Corrosion at Welds
Corrosion at welds is not a problem in the proposed environment.

Conclusion:
Weld corrosion is not considered a problem.

g Microbiologically Induced Corrosion (MIC)
The proposed operating conditions are generally too hot and too acidic for MIC.

Conclusion:
MIC is not considered a problem.

PLANT ITEM MATERIAL SELECTION DATA SHEET

h Fatigue/Corrosion Fatigue
Corrosion fatigue is a not expected to be a concern.

Conclusions
Not applicable.

i Vapor Phase Corrosion
Not applicable to this system.

Conclusion:
Vapor phase corrosion is not expected.

j Erosion
There are no solids and the velocities are not sufficient to cause a problem.

Conclusion:
None expected.

k *Galling of Moving Surfaces*
Not applicable.

Conclusion:
Not applicable.

l Fretting/Wear
No contacting surfaces expected.

Conclusion:
Not applicable.

m Galvanic Corrosion
No dissimilar metals are present.

Conclusion:
Not applicable.

n Cavitation
None expected.

Conclusion:
Not believed to be of concern.

o Creep
The temperatures are too low to be a concern.

Conclusion:
Not applicable.

p Inadvertent Addition of Nitric Acid
Column regularly operates at very low pH.

Conclusion:
Not applicable.

PLANT ITEM MATERIAL SELECTION DATA SHEET

References:

1 Berhardsson, S, R Mellstrom, and J Oredsson, 1981, *Properties of Two Highly corrosion Resistant Duplex Stainless Steels*, Paper 124, presented at Corrosion 81, NACE International, Houston, TX 77218
2. Davis, JR (Ed), 1987, *Corrosion, Vol 13*, In "Metals Handbook", ASM International, Metals Park, OH 44073
3. Sedriks, AJ, 1996, *Corrosion of Stainless Steels*, John Wiley & Sons, Inc., New York, NY 10158
4. Wilding, MW and BE Paige, 1976, *Survey on Corrosion of Metals and Alloys in Solutions Containing Nitric Acid*, ICP-1107, Idaho Chemical Programs, Idaho National Engineering Laboratory, Idaho Falls, ID

Bibliography:

1 Cole, HS, 1974, *Corrosion of Austenitic Stainless Steel Alloys Due to HNO_3 – HF Mixtures*, ICP-1036, Idaho Chemical Programs – Operations Office, Idaho Falls, ID
2. Davis, JR (Ed), 1994, *Stainless Steels*, In ASM Metals Handbook, ASM International, Metals Park, OH 44073
3. Hamner, NE, 1981, *Corrosion Data Survey*, Metals Section, 5th Ed, NACE International, Houston, TX
4. Jones, RH (Ed.), 1992, *Stress-Corrosion Cracking*, ASM International, Metals Park, OH 44073
5 Uhlig, HH, 1948, *Corrosion Handbook*, John Wiley & Sons, New York, NY 10158
6. Van Delinder, LS (Ed), 1984, *Corrosion Basics*, NACE International, Houston, TX 77084

PLANT ITEM MATERIAL SELECTION DATA SHEET
OPERATING CONDITIONS

PROCESS CORROSION DATA SHEET

Component(s) (Name/ID #) Cs evaporator nitric acid distillation column (CNP-DISTC-00001)

Facility PTF

In Black Cell? No

Chemicals	Unit[1]	Contract Max		Non-Routine		Notes
		Leach	No leach	Leach	No Leach	
Aluminum	g/l	3 84E-04	3.86E-04			
Chloride	g/l	4.28E-04	5.12E-04			
Fluoride	g/l					
Iron	g/l					
Nitrate	g/l					Assumption 1
Nitrite	g/l	5.11E-04	6.11E-04			
Phosphate	g/l	8.88E-04	1.04E-03			
Sulfate	g/l	3.36E-04	4.01E-04			
Mercury	g/l					
Carbonate	g/l	1.66E-03	1.82E-03			
Undissolved solids	wt%					
Other (NaMnO4, Pb,...)	g/l					
Other	g/l					
pH	N/A					Note 3
Temperature	°F					Note 2
						deleted

List of Organic Species:

Notes:

1. Concentrations less than 1x 10^{-4} g/l do not need to be reported; list values to two significant digits max.
2. Tnormal operation 115 °F to 140 °F
3. Will be highly acidic. pH approximately 0.3
4 Deleted

Assumptions:

1 Based on the presence of 0.5M HNO_3 the nitrate concentration is expected to be approximately 31 g/l

PLANT ITEM MATERIAL SELECTION DATA SHEET

4.1.3 Cs Evaporator Nitric Acid Distillation Column (CNP-DISTC-00001)

Routine Operations

Nitric acid vapor enters the nitric acid distillation column, CNP-DISTC-00001, which separates water from the acid. The recovered nitric acid is stored in the Cs evaporator recovered nitric acid vessel CNP-VSL-00004. During elution, nitric acid is pumped from the storage vessel by the Cs IX feed pump, through the feed cooler, and distributed into the system CXP ion exchange columns.

Non-Routine Operations that Could Affect Corrosion/Erosion

None identified.

PLANT ITEM MATERIAL SELECTION DATA SHEET

R10682509

CNP-HX-00002 (PTF)
Cs Evaporator Primary Condenser

- Design Temperature (°F)(max/min): Shell side: 250/40; Tube side: 125/40
- Design Pressure (psig) (max/min): Shell side: 50/FV; Tube side: 100/FV
- Location: outcell

ISSUED BY
RPP-WTP PDC

Design temperature and pressure information is considered bounding and to be confirmed by Vendor.

Contents of this document are Dangerous Waste Permit affecting

Operating conditions are as stated on attached Process Corrosion Data Sheet

Operating Modes Considered:

- Normal operations

Materials Considered:

Material (UNS No.)	Relative Cost	Acceptable Material	Unacceptable Material
Carbon Steel	0.23		X
304L (S30403)	1.00	X	
316L (S31603)	1.18	X	
6% Mo (N08367/N08926)	7.64	X	
Alloy 22 (N06022)	11.4	X	
Ti-2 (R50400)	10.1		X

Recommended Material: 304 (max 0.030% C; dual certified)

Recommended Corrosion Allowance: Shell side and tube side: 0.040 inch (includes 0.024 inch corrosion allowance and 0.004 inch erosion allowance)

Process & Operations Limitations:

- None

STEVEN WAKEMAN VAIL
STATE OF WASHINGTON
39250
REGISTERED
PROFESSIONAL ENGINEER
5/25/06
EXPIRES: 12/07/07

Please note that source, special nuclear and byproduct materials, as defined in the Atomic Energy Act of 1954 (AEA), are regulated at the U.S. Department of Energy (DOE) facilities exclusively by DOE acting pursuant to its AEA authority. DOE asserts, that pursuant to the AEA, it has sole and exclusive responsibility and authority to regulate source, special nuclear, and byproduct materials at DOE-owned nuclear facilities. Information contained herein on radionuclides is provided for process description purposes only.

This bound document contains a total of 6 sheets.

REV	DATE	REASON FOR REVISION	PREPARER	CHECKER	APPROVER
1	5/25/06	Issued for Permitting Use			
0	9/8/04	Issued for Permitting Use	DLA	JRD	APR

PLANT ITEM MATERIAL SELECTION DATA SHEET

Corrosion Considerations:

CNP-HX-00002 is a water-cooled, U-tube unit with condensation taking place on the shell side. Product flow includes excess water from the pre-elution and post-elution rinses from the ion exchange columns.

a General Corrosion
In normal operation, the vessel will contain either treated process water (slightly acidic) or DIW. Based on Uhlig (1948), little uniform corrosion is expected at these conditions. The uniform corrosion rate of the 300 series stainless steels in DIW at temperatures up to about boiling are generally considered small, <1 mpy. Hamner (1981) lists a corrosion rate for 304 (and 304L) in pure water of less than 2 mpy (his smallest unit of measurement).

Conclusion:
304L or 316L are acceptable for this system with a probable general corrosion rate of less than 1 mpy.

b Pitting Corrosion
With the proposed temperatures, 304L is acceptable under the stated no-chloride conditions.

Conclusion:
The data suggest there are no halides to cause pitting, 304L is recommended.

c End Grain Corrosion
Not believed to be applicable to this system.

Conclusion:
Not applicable to this system.

d Stress Corrosion Cracking
The exact amount of chloride required to cause stress corrosion cracking is unknown. In part this is because the amount varies with temperature, metal sensitization, and the environment. But it is also unknown because chloride tends to concentrate under heat transfer conditions, by evaporation, and electrochemically during a corrosion process. Hence, even as little as 10 ppm can lead to cracking under some conditions. Generally, as seen in Sedriks (1996) and Davis (1987), stress corrosion cracking does not usually occur below about 140 °F. Further, the use of "L" grade stainless reduces the opportunity for sensitization.

Conclusion:
The use of 304L is expected to be acceptable for the stated no-chloride conditions.

e Crevice Corrosion
See Pitting.

Conclusion:
See Pitting

f Corrosion at Welds
Corrosion at welds is not a problem in the proposed environment.

Conclusion:
Weld corrosion is not a problem for this system.

g Microbiologically Induced Corrosion (MIC)
The proposed operating conditions are potentially suitable for MIC. However, MIC is not normally observed in operating systems.

Conclusion:
MIC will not be a problem.

PLANT ITEM MATERIAL SELECTION DATA SHEET

h Fatigue/Corrosion Fatigue
Corrosion fatigue is a not expected to be a concern.

Conclusion:
Not applicable.

i Vapor Phase Corrosion
Not applicable to this system.

Conclusion:
Vapor phase corrosion is not expected.

j Erosion
There are no solids and the velocities are expected to be low. Erosion allowance of 0.004 inch for components with low solids content (< 2 wt%) at low velocities is based on 24590-WTP-RPT-M-04-0008.

Conclusion:
None expected.

k Galling of Moving Surfaces
Not applicable.

Conclusion:
Not applicable.

l Fretting/Wear
No contacting surfaces expected.

Conclusion:
Not applicable.

m Galvanic Corrosion
No dissimilar metals are present.

Conclusion:
Not applicable.

n Cavitation
None expected.

Conclusion:
Not believed to be of concern.

o Creep
The temperatures are too low to be a concern.

Conclusion:
Not applicable.

p Inadvertent Nitric Acid Addition
The contents of the condenser are essentially water with no reportable halides. The lowering of the pH by the inadvertent addition of nitric acid would be of no concern.

Conclusion:
The recommended materials will be able to withstand a plausible inadvertent addition of nitric acid.

PLANT ITEM MATERIAL SELECTION DATA SHEET

References:

1. 24590-WTP-RPT-M-04-0008, Rev. 2, *Evaluation of Stainless Steel Wear Rates in WTP Waste Streams at Low Velocities,*
2. 24590-WTP-RPT-PR-04-0001, Rev. B, *WTP Process Corrosion Data*
3. Davis, JR (Ed), 1987, *Corrosion, Vol 13*, In "Metals Handbook", ASM International, Metals Park, OH 44073
4. Hamner, NE, 1981, *Corrosion Data Survey*, Metals Section, 5th Ed, NACE International, Houston, TX
5. Sedriks, AJ, 1996, *Corrosion of Stainless Steels*, John Wiley & Sons, Inc., New York, NY 10158
6. Uhlig, HH, 1948, *Corrosion Handbook*, John Wiley & Sons, New York, NY 10158

Bibliography:

1. CCN 130170, Blackburn, LD to PG Johnson, Internal Memo, Westinghouse Hanford Co, *Evaluation of 240-AR Chloride Limit*, August 15, 1991.
2. CCN 130171, Ohl, PC to PG Johnson, Internal Memo, Westinghouse Hanford Co, *Technical Bases for Cl- and pH Limits for Liquid Waste Tank Cars*, MA: PCO:90/01, January 16, 1990.
3. Agarwal, DC, *Nickel and Nickel Alloys*, In: Revie, WW, 2000. *Uhlig's Corrosion Handbook*, 2nd Edition, Wiley-Interscience, New York, NY 10158
4. Davis, JR (Ed), 1994, *Stainless Steels*, In ASM Metals Handbook, ASM International, Metals Park, OH 44073
5. Jones, RH (Ed.), 1992, *Stress-Corrosion Cracking*, ASM International, Metals Park, OH 44073
6. Phull, BS, WL Mathay, & RW Ross, 2000, *Corrosion Resistance of Duplex and 4-6% Mo-Containing Stainless Steels in FGD Scrubber Absorber Slurry Environments*, Presented at Corrosion 2000, Orlando, FL, March 26-31, 2000, NACE International, Houston TX 77218
7. Van Delinder, LS (Ed), 1984, *Corrosion Basics*, NACE International, Houston, TX 77084

PLANT ITEM MATERIAL SELECTION DATA SHEET

24590-WTP-RPT-PR-04-0001, Rev. B
WTP Process Corrosion Data

PROCESS CORROSION DATA SHEET

Component(s) (Name/ID #) Cs evaporator primary, inter- and after- condenser (CNP-HX-00002,3,4)

Facility PTF

In Black Cell? No

Chemicals	Unit[1]	Contract Max		Non-Routine		Notes
		Leach	No leach	Leach	No Leach	
Aluminum	g/m^3					
Chloride	g/m^3					
Fluoride	g/m^3					
Iron	g/m^3					
Nitrate	g/m^3					
Nitrite	g/m^3					
Phosphate	g/m^3					
Sulfate	g/m^3					
Mercury	g/m^3					
Carbonate	g/m^3					
Undissolved solids	wt%					
Other (NaMnO4, Pb,...)	g/m^3					
Other	g/m^3					
pH	N/A					Assumption 1
Temperature	°F					Assumption 2

List of Organic Species:

References

System Description: 24590-PTF-3YD-CNP-00001, Rev 0
Mass Balance Document: Chemical Max Calculation 24590-WTP-M4C-V11T-00005, Rev A
Normal Input Stream #: CNP04
Off Normal Input Stream # (e.g., overflow from other vessels): N/A
P&ID: N/A
PFD: 24590-PTF-M5-V17T-P0014, Rev 1
Technical Reports: N/A

Notes:

1. Concentrations less than 1x 10^{-4} g/m^3 do not need to be reported; list values to two significant digits max.

Assumptions:

1. The overheads from the distilation column are expected to be contain pnmarily water with pH near or at 7.0.
2. Assume same as T normal operation for the evaporator, 122 °F to 212 °F (pressure of operation for last condenser is atmospheric)

PLANT ITEM MATERIAL SELECTION DATA SHEET

4.1.5 Cs Evaporator Primary Condenser (CNP-HX-00002), Cs Evaporator Inter-Condenser (CNP-HX-00003), and Cs Evaporator After-Condenser (CNP-HX-00004)

Routine Operations

The Cs evaporator primary condenser, CNP-HX-00002, is a water-cooled, U-tube unit with condensation taking place on the shell side. The condenser shell incorporates a condensate sump, which contains a weir arrangement to control the flow split between the reflux and the overhead product flows. The overhead product flow includes excess water from the pre-elution and post-elution rinses sent to the Cs evaporator separator vessel from the cesium ion exchange columns.

To reduce the boiling temperature of the liquids in the Cs evaporator separator vessel, the system is run under vacuum. This is achieved using a two-stage steam ejector system. Exhaust vapors from the ejectors are condensed in Cs evaporator inter-condenser, CNP-HX-00003, and after-condenser, CNP-HX-00004, prior to venting to the ventilation system scrubbing equipment. Process condensate from the Cs evaporator primary condenser and Cs evaporator secondary condenser drains to the acidic/alkaline effluent vessels, PWD-VSL-00015 and PWD-VSL-00016, located in the PWD system.

The condensate from the condensers has a minimal amount of HNO_3, making it slightly acidic but not acidic enough to warrant neutralization; thus, it will be considered and referred to as process condensate.

Non-Routine Operations that Could Affect Corrosion/Erosion

None identified.

PLANT ITEM MATERIAL SELECTION DATA SHEET

R10682510

ISSUED BY
RPP-WTP PDC

CNP-HX-00003 (PTF)
Cs Evaporator Inter-Condenser

- Design Temperature (°F) (max/min): Shell side: 378/40; Tube side: 125/40
- Design pressure (psig) (max/min): Shell side: 100/FV; Tube side: 100/FV
- Location: outcell

Design temperature and pressure information is considered bounding and to be confirmed by Vendor.

Contents of this document are Dangerous Waste Permit affecting

Operating conditions are as stated on attached Process Corrosion Data Sheet

Operating Modes Considered:

- Normal operation

Materials Considered:

Material (UNS No.)	Relative Cost	Acceptable Material	Unacceptable Material
Carbon Steel	0.23		X
304L (S30403)	1.00	X	
316L (S31603)	1.18	X	
6% Mo (N08367/N08926)	7.64	X	
Alloy 22 (N06022)	11.4	X	
Ti-2 (R50400)	10.1		X

Recommended Material: 304 (max 0.030% C; dual certified)

Recommended Corrosion Allowance: Shell side and tube side: 0.040 inch (includes 0.024 inch corrosion allowance and 0.004 inch erosion allowance)

Process & Operations Limitations:

- None

STEVEN WAKEMAN VAIL
STATE OF WASHINGTON
39250
REGISTERED
PROFESSIONAL ENGINEER
5/24/06
EXPIRES: 12/07/07

Please note that source, special nuclear and byproduct materials, as defined in the Atomic Energy Act of 1954 (AEA), are regulated at the U.S. Department of Energy (DOE) facilities exclusively by DOE acting pursuant to its AEA authority. DOE asserts, that pursuant to the AEA, it has sole and exclusive responsibility and authority to regulate source, special nuclear, and byproduct materials at DOE-owned nuclear facilities. Information contained herein on radionuclides is provided for process description purposes only.

This bound document contains a total of 6 sheets.

REV	DATE	REASON FOR REVISION	PREPARER	CHECKER	APPROVER
1	5/24/06	Issued for Permitting Use		JMK	SWVail
0	9/8/04	Issued for Permitting Use	DLA	JRD	APR

PLANT ITEM MATERIAL SELECTION DATA SHEET

Corrosion Considerations:

Exhaust vapors from the Cs evaporator separator vessel are condensed in CNP-HX-00003. A minimal amount of HNO_3 is present in the condensate making it slightly acidic.

a General Corrosion
In normal operation, the vessel will contain either treated process water (slightly acidic) or DIW. Based on Uhlig (1948), little uniform corrosion is expected at these conditions. The uniform corrosion rate of the 300 series stainless steels in DIW at temperatures up to about boiling are generally considered small, <1 mpy. Hamner (1981) lists a corrosion rate for 304 (and 304L) in pure water of less than 2 mpy (his smallest unit of measurement).

Conclusion:
304L or 316L are acceptable for this system with a probable general corrosion rate of less than 1 mpy.

b Pitting Corrosion
With the proposed temperatures, 304L is acceptable under the stated no-chloride conditions.

Conclusion:
The data from the flowsheets suggest there are no halides to cause pitting; therefore, 304L is recommended.

c End Grain Corrosion
Not believed to be applicable to this system.

Conclusion:
Not applicable to this system.

d Stress Corrosion Cracking
The exact amount of chloride required to stress corrosion crack stainless steel is unknown. In part this is because the amount varies with temperature, metal sensitization, and the environment. But it is also unknown because chloride tends to concentrate under heat transfer conditions, by evaporation, and electrochemically during a corrosion process. Hence, even as little as a few ppm can lead to cracking under some conditions. Generally, as seen in Sedriks (1996) and Davis (1987), stress corrosion cracking does not usually occur below about 140°F. Further, the use of "L" grade stainless reduces the opportunity for sensitization.

Conclusion:
The use of 304L is expected to be acceptable for the stated no-chloride conditions.

e Crevice Corrosion
See Pitting.

Conclusion:
See Pitting

f Corrosion at Welds
Corrosion at welds is not a problem in the proposed environment.

Conclusion:
Weld corrosion is not considered a problem for this system.

g Microbiologically Induced Corrosion (MIC)
The proposed operating conditions are suitable for MIC if infected. However, infection is considered unlikely.

Conclusion:
MIC is not considered a problem.

h Fatigue/Corrosion Fatigue
Corrosion fatigue is a not expected to be a concern.

Conclusions
Not applicable.

PLANT ITEM MATERIAL SELECTION DATA SHEET

i Vapor Phase Corrosion
Not applicable to this system.

Conclusion:
Vapor phase corrosion is not expected.

j Erosion
Velocities within the condenser are expected to be low. Erosion allowance of 0.004 inch for components with low solids content (< 2 wt%) at low velocities is based on 24590-WTP-RPT-M-04-0008.

Conclusion:
Not believed to be a concern.

k Galling of Moving Surfaces
Not applicable.

Conclusion:
Not applicable.

l Fretting/Wear
No contacting surfaces expected.

Conclusion:
Not applicable.

m Galvanic Corrosion
No dissimilar metals are present.

Conclusion:
Not applicable.

n Cavitation
None expected.

Conclusion:
Not believed to be of concern.

o Creep
The temperatures are too low to be a concern.

Conclusion:
Not applicable.

p Inadvertent Nitric Acid Addition
The contents of the condenser are essentially water with no reportable halides. The lowering of the pH by the inadvertent addition of nitric acid would be of no concern.

Conclusion:
The recommended materials will be able to withstand a plausible inadvertent addition of nitric acid.

PLANT ITEM MATERIAL SELECTION DATA SHEET

References:

1. 24590-WTP-RPT-M-04-0008, Rev. 2, *Evaluation of Stainless Steel Wear Rates in WTP Waste Streams at Low Velocities,*
2. 24590-WTP-RPT-PR-04-0001, Rev. B, *WTP Process Corrosion Data*
3. Davis, JR (Ed), 1987, *Corrosion, Vol 13*, In "Metals Handbook", ASM International, Metals Park, OH 44073
4. Hamner, NE, 1981, *Corrosion Data Survey*, Metals Section, 5th Ed, NACE International, Houston, TX
5. Sedriks, AJ, 1996, *Corrosion of Stainless Steels*, John Wiley & Sons, Inc., New York, NY 10158
6. Uhlig, HH, 1948, *Corrosion Handbook*, John Wiley & Sons, New York, NY 10158

Bibliography:

1. CCN 130170, Blackburn, LD to PG Johnson, Internal Memo, Westinghouse Hanford Co, *Evaluation of 240-AR Chloride Limit*, August 15, 1991.
2. CCN 130171, Ohl, PC to PG Johnson, Internal Memo, Westinghouse Hanford Co, *Technical Bases for Cl- and pH Limits for Liquid Waste Tank Cars*, MA: PCO:90/01, January 16, 1990.
3. Davis, JR (Ed), 1994, *Stainless Steels*, In ASM Metals Handbook, ASM International, Metals Park, OH 44073
4. Jones, RH (Ed.), 1992, *Stress-Corrosion Cracking*, ASM International, Metals Park, OH 44073
5. Van Delinder, LS (Ed), 1984, *Corrosion Basics*, NACE International, Houston, TX 77084

PLANT ITEM MATERIAL SELECTION DATA SHEET

24590-WTP-RPT-PR-04-0001, Rev. B
WTP Process Corrosion Data

PROCESS CORROSION DATA SHEET

Component(s) (Name/ID #) Cs evaporator primary, inter- and after- condenser (CNP-HX-00002,3,4)

Facility PTF

In Black Cell? No

Chemicals	Unit[1]	Contract Max		Non-Routine		Notes
		Leach	No leach	Leach	No Leach	
Aluminum	g/m^3					
Chloride	g/m^3					
Fluoride	g/m^3					
Iron	g/m^3					
Nitrate	g/m^3					
Nitrite	g/m^3					
Phosphate	g/m^3					
Sulfate	g/m^3					
Mercury	g/m^3					
Carbonate	g/m^3					
Undissolved solids	wt%					
Other (NaMnO4, Pb,...)	g/m^3					
Other	g/m^3					
pH	N/A					Assumption 1
Temperature	°F					Assumption 2

List of Organic Species:

References

System Description: 24590-PTF-3YD-CNP-00001, Rev 0
Mass Balance Document. Chemical Max Calculation 24590-WTP-M4C-V11T-00005, Rev A
Normal Input Stream #: CNP04
Off Normal Input Stream # (e.g., overflow from other vessels): N/A
P&ID: N/A
PFD: 24590-PTF-M5-V17T-P0014, Rev 1
Technical Reports: N/A

Notes:

1. Concentrations less than 1x 10^{-4} g/m^3 do not need to be reported; list values to two significant digits max

Assumptions:

1. The overheads from the distilation column are expected to be contain primarily water with pH near or at 7.0.
2. Assume same as T normal operation for the evaporator, 122 °F to 212 °F (pressure of operation for last condenser is atmospheric)

PLANT ITEM MATERIAL SELECTION DATA SHEET

4.1.5 Cs Evaporator Primary Condenser (CNP-HX-00002), Cs Evaporator Inter-Condenser (CNP-HX-00003), and Cs Evaporator After-Condenser (CNP-HX-00004)

Routine Operations

The Cs evaporator primary condenser, CNP-HX-00002, is a water-cooled, U-tube unit with condensation taking place on the shell side. The condenser shell incorporates a condensate sump, which contains a weir arrangement to control the flow split between the reflux and the overhead product flows. The overhead product flow includes excess water from the pre-elution and post-elution rinses sent to the Cs evaporator separator vessel from the cesium ion exchange columns.

To reduce the boiling temperature of the liquids in the Cs evaporator separator vessel, the system is run under vacuum. This is achieved using a two-stage steam ejector system. Exhaust vapors from the ejectors are condensed in Cs evaporator inter-condenser, CNP-HX-00003, and after-condenser, CNP-HX-00004, prior to venting to the ventilation system scrubbing equipment. Process condensate from the Cs evaporator primary condenser and Cs evaporator secondary condenser drains to the acidic/alkaline effluent vessels, PWD-VSL-00015 and PWD-VSL-00016, located in the PWD system.

The condensate from the condensers has a minimal amount of HNO_3, making it slightly acidic but not acidic enough to warrant neutralization; thus, it will be considered and referred to as process condensate.

Non-Routine Operations that Could Affect Corrosion/Erosion

None identified.

PLANT ITEM MATERIAL SELECTION DATA SHEET

R10682511

CNP-HX-00001 (PTF)

Cs Evaporator Concentrate Reboiler

ISSUED BY
RPP-WTP PDC

- Design Temperature (°F) (max/min): Shell side: 325/40; Tube side: 250/40
- Design pressure (psig) (max/min): Shell side: 50/FV; Tube side: 50/FV
- Location: hot cell

Design temperature and pressure information is considered bounding and to be confirmed by Vendor.

Contents of this document are Dangerous Waste Permit affecting

Operating conditions are as stated on attached Process Corrosion Data Sheet

Operating Modes Considered:

- The vessel is at the stated pH range at the normal operating temperature.

Materials Considered:

Material (UNS No.)	Relative Cost	Acceptable Material	Unacceptable Material
Carbon Steel	0.23		X
304L (S30403)	1.00		X
316L (S31603)	1.18	X (shell-side)	
6% Mo (N08367/N08926)	7.64		X
Alloy 22 (N06022)	11.4	X	
Ti-2 (R50400)	10.1		X

Recommended Material:

Tube-side components: UNS N06022
Shell-side components (steam): 316 (max 0.030% C; dual certified)

Recommended Corrosion Allowance: Shell side and tube side; 0.040 inch (includes 0.024 inch corrosion allowance and 0.004 inch erosion allowance)

Process & Operations Limitations:

- Use DIW as process cooling water.

STEVEN WAKEMAN VAIL
STATE OF WASHINGTON
39250
REGISTERED PROFESSIONAL ENGINEER
5/24/06
EXPIRES: 12/07/07

Please note that source, special nuclear and byproduct materials, as defined in the Atomic Energy Act of 1954 (AEA), are regulated at the U.S. Department of Energy (DOE) facilities exclusively by DOE acting pursuant to its AEA authority. DOE asserts, that pursuant to the AEA, it has sole and exclusive responsibility and authority to regulate source, special nuclear, and byproduct materials at DOE-owned nuclear facilities. Information contained herein on radionuclides is provided for process description purposes only.

This bound document contains a total of 6 sheets.

REV	DATE	REASON FOR REVISION	PREPARER	CHECKER	APPROVER
1	5/24/06	Issued for Permitting Use			
0	9/9/04	Issued for Permitting Use	DLA	JRD	APR

PLANT ITEM MATERIAL SELECTION DATA SHEET

Corrosion Considerations:

a General Corrosion
In the proposed pH operating range, little specific information was found for the general/uniform corrosion of stainless steels or other material in the given waste. This lack of data is not critical because the alloys needed for the system typically fail by pitting, crevice corrosion, or cracking. On this basis, a corrosion allowance has little meaning though a nominal value is given.

Even during high chloride conditions, either 304L or 316L is expected to have a sufficiently low uniform corrosion rate.

Conclusion:
Both 304L and 316L are expected to be sufficiently resistant to the waste solution with a probable general corrosion rate of less than 1 mpy.

b Pitting Corrosion
Chloride is notorious for causing pitting in acid and neutral solutions. Dillon (2000) is of the opinion that in alkaline solutions, pH>12, chlorides are likely to promote pitting only in tight crevices. At pH < 12, chloride can be a concern. However, Revie (2000) and Uhlig (1948) both note nitrate inhibits chloride corrosion. Therefore, the high nitrate concentrations in the solution are expected to be beneficial.

Because of the high chloride conditions, and the high design temperature, C-22 or better is required for the tube-side components of the reboiler that will be in contact with the waste. For the shell-side, which is in contact with steam only, 304L will be sufficiently resistant. However, taking into consideration the relatively elevated design temperature on the shell side and the increased possibility of crevice corrosion, 316L is recommended.

Conclusion:
The high chloride conditions are such that an alloy such as C-22 or better will be required for only the components in contact with waste. Otherwise, 316L is suitable.

c End Grain Corrosion
Not believed to be applicable to this system.

Conclusion:
Not applicable to this system.

d Stress Corrosion Cracking
The exact amount of chloride required to stress corrosion crack stainless steel is unknown. In part, this is because the amount varies with temperature, metal sensitization, and the environment. It is also unknown because chloride tends to concentrate under heat transfer conditions, by evaporation, and electrochemically during a corrosion process. Hence, even as little as a few ppm can lead to cracking under some conditions. Generally, as seen in Sedriks (1996) and Davis (1987), stress corrosion cracking does not usually occur below about 140°F. The use of high nickel alloys for the tube-side components (waste) reduces the susceptibility to cracking.

Conclusion:
With the suggested high chloride conditions, C-22 will be needed for the tube-side components.

e Crevice Corrosion
See Pitting.

Conclusion:
See Pitting.

f Corrosion at Welds
Corrosion at welds is not considered a problem in the proposed environment.

Conclusion:
Weld corrosion is not considered a problem for this system.

PLANT ITEM MATERIAL SELECTION DATA SHEET

g Microbiologically Induced Corrosion (MIC)
The proposed operating conditions are suitable for MIC. However, MIC is not normally observed in operating systems.

Conclusion:
MIC is not considered a problem.

h Fatigue/Corrosion Fatigue
Corrosion fatigue is a not expected to be a concern.

Conclusions
Not applicable.

i Vapor Phase Corrosion
Not applicable to this system.

Conclusion:
Not expected to be a concern.

j Erosion
Velocities within the vessel are expected to be low. Erosion allowance of 0.004 inch for components with low solids content (< 2 wt%) at low velocities is based on 24590-WTP-RPT-M-04-0008.

Conclusion:
Not believed to be a concern.

k Galling of Moving Surfaces
Not applicable.

Conclusion:
Not applicable.

l Fretting/Wear
No contacting surfaces expected.

Conclusion:
Not applicable.

m Galvanic Corrosion
No dissimilar metals are present.

Conclusion:
Not applicable.

n Cavitation
None expected.

Conclusion:
Not believed to be of concern.

o Creep
The temperatures are too low to be a concern.

Conclusion:
Not applicable.

p Inadvertent Addition of Nitric Acid
Reboiler routinely operates at low pH.

Conclusion:
Not applicable.

PLANT ITEM MATERIAL SELECTION DATA SHEET

References:

1. 24590-WTP-RPT-M-04-0008, Rev. 2, *Evaluation of Stainless Steel Wear Rates in WTP Waste Streams at Low Velocities,*
2. 24590-WTP-RPT-PR-04-0001, Rev. B, *WTP Process Corrosion Data*
3. CCN 130173, Dillon, CP (Nickel Development Institute), Personal Communication to J R Divine (ChemMet, Ltd., PC), 3 Feb 2000.
4. CCN 130177, Zapp, PE, 2000, *Material Corrosion and Plate-Out Test of Types 304L and 316L Stainless Steel*, WSRC-TR-2000-00434, Savannah River Site, Aiken, SC
5. Davis, JR (Ed), 1987, *Corrosion, Vol 13*, In "Metals Handbook", ASM International, Metals Park, OH 44073
6. Revie, WW, 2000. *Uhlig's Corrosion Handbook*, 2nd Edition, Wiley-Interscience, New York, NY 10158
7. Sedriks, AJ, 1996, *Corrosion of Stainless Steels*, John Wiley & Sons, Inc., New York, NY 10158
8. Uhlig, HH, 1948, *Corrosion Handbook*, John Wiley & Sons, New York, NY 10158

Bibliography:

1. CCN 130170, Blackburn, LD to PG Johnson, Internal Memo, Westinghouse Hanford Co, *Evaluation of 240-AR Chloride Limit*, August 15, 1991.
2. CCN 130171, Ohl, PC to PG Johnson, Internal Memo, Westinghouse Hanford Co, *Technical Bases for Cl- and pH Limits for Liquid Waste Tank Cars*, MA: PCO:90/01, January 16, 1990.
3. Agarwal, DC, *Nickel and Nickel Alloys*, In: Revie, WW, 2000. *Uhlig's Corrosion Handbook*, 2nd Edition, Wiley-Interscience, New York, NY 10158
4. Davis, JR (Ed), 1994, *Stainless Steels*, In ASM Metals Handbook, ASM International, Metals Park, OH 44073
5. Hamner, NE, 1981, *Corrosion Data Survey*, Metals Section, 5th Ed, NACE International, Houston, TX
6. Jones, RH (Ed.), 1992, *Stress-Corrosion Cracking*, ASM International, Metals Park, OH 44073
7. Van Delinder, LS (Ed), 1984, *Corrosion Basics*, NACE International, Houston, TX 77084

PLANT ITEM MATERIAL SELECTION DATA SHEET

24590-WTP-RPT-PR-04-0001, Rev. B
WTP Process Corrosion Data

PROCESS CORROSION DATA SHEET

Component(s) (Name/ID #) Cs evaporator separator vessel (CNP-EVAP-00001)
Cs concentrate reboiler (CNP-HX-00001)

Facility PTF

In Black Cell? Yes (CNP-EVAP-00001 only)

Chemicals	Unit[1]	Contract Max		Non-Routine		Notes
		Leach	No leach	Leach	No Leach	
Aluminum	g/l	1.38E+01	1.29E+01			
Chloride	g/l	5.29E+00	5.89E+00			
Fluoride	g/l	6.28E+00	7.02E+00			
Iron	g/l	1.01E+00	1.05E+00			
Nitrate	g/l	5.78E+02	5.80E+02			
Nitrite	g/l	2.93E+01	3.25E+01			
Phosphate	g/l	2.11E+01	2.30E+01			
Sulfate	g/l	1.12E+01	1.25E+01			
Mercury	g/l	1.72E-02	7 88E-03			
Carbonate	g/l	3.95E+01	4.03E+01			
Undissolved solids	wt%					
Other (NaMnO4, Pb,...)	g/l					
Other	g/l					
pH	N/A					Note 2
Temperature	°F					Note 3

List of Organic Species:

References

System Description: 24590-PTF-3YD-CNP-00001, Rev 0
Mass Balance Document: 24590-WTP-M4C-V11T-00005, Rev A
Normal Input Stream #: CNP02, CNP03,CNP12, CNP10,CNP20
Off Normal Input Stream # (e.g., overflow from other vessels): N/A
P&ID: N/A
PFD: 24590-PTF-M5-V17T-P0014, Rev 1
Technical Reports: N/A

Notes:

1. Concentrations less than 1x 10^{-4} g/l do not need to be reported; list values to two significant digits max.
2. pH approximately 0.3 to 14. Operates primarily at acidic end, NaOH added prior to transfer out. Minimum pH based on 0.5 M nitric acid.
3 Tnormal operation 122 °F to 140 °F (24590-PTF-M5C-CNP-00001, Rev 0)

Assumptions:

Breakpot CNP-BRKT-00001 and CNP-VSL-00003 are for non-routine use and are normally empty. These vessels can receive a range of evaporator concentrate.

PLANT ITEM MATERIAL SELECTION DATA SHEET

24590-WTP-RPT-PR-04-0001, Rev. B
WTP Process Corrosion Data

4.1.4 Cs Evaporator Separator Vessel (CNP-EVAP-00001), Cs Evaporator Concentrate Reboiler (CNP-HX-00001), and Eluate Contingency Storage Vessel (CNP-VSL-00003)

Routine Operations

Eluate from CNP-BRKPT-00002 is gravity-fed through a lute pot, CNP-VSL-00001, into the separator vessel, CNP-EVAP-00001. The Cs evaporator eluate lute pot, CNP-VSL-00001, provides a vacuum seal between CNP-BRKPT-00002 and the Cs evaporator separator vessel, CNP-EVAP-00001. The cesium concentrate is transferred from the Cs evaporator separator vessel using transfer ejectors to send it to vessel HLP-VSL-00028 or HLP-VSL-00027B in the HLP system.

Non-Routine Operations that Could Affect Corrosion/Erosion

If the HLP system cannot accept additional volume at the time of a required transfer, the eluate contingency storage vessel, CNP-VSL-00003, will receive the transfer.

PLANT ITEM MATERIAL SELECTION DATA SHEET

R10685019

CNP-EVAP-00001 (PTF)
Cs Evaporator Separator Vessel

ISSUED BY
RPP-WTP PDC

- Design Temperature (°F)(max/min): 250/40
- Design Pressure (psig) (internal/external): 50/15
- Location: incell

Note: Design pressure and temperature information is considered bounding and to be confirmed by Vendor.

Contents of this document are Dangerous Waste Permit affecting

Operating conditions are as stated on attached Process Corrosion Data Sheet

Operating Modes Considered:

- The vessel is at the normal operating pH and temperature

Materials Considered:

Material (UNS No.)	Relative Cost	Acceptable Material	Unacceptable Material
Carbon Steel	0.23		X
304L (S30403)	1.00		X
316L (S31603)	1.18		X
6% Mo (N08367/N08926)	7.64		X
Alloy 22 (N06022)	11.4	X	
Ti-2 (R50400)	10.1		X

Recommended Material: UNS N06022

Recommended Corrosion Allowance: 0.040 inch (includes 0.024 inch corrosion allowance and 0.004 inch erosion allowance)

Process & Operations Limitations:

- None

STEVEN WAKEMAN VAIL
STATE OF WASHINGTON
39250
REGISTERED
PROFESSIONAL ENGINEER
EXPIRES: 12/07/07

6/13/06

Please note that source, special nuclear and byproduct materials, as defined in the Atomic Energy Act of 1954 (AEA), are regulated at the U.S. Department of Energy (DOE) facilities exclusively by DOE acting pursuant to its AEA authority. DOE asserts, that pursuant to the AEA, it has sole and exclusive responsibility and authority to regulate source, special nuclear, and byproduct materials at DOE-owned nuclear facilities. Information contained herein on radionuclides is provided for process description purposes only.

This bound document contains a total of 6 sheets.

REV	DATE	REASON FOR REVISION	PREPARER	CHECKER	APPROVER
1	6/13/06	Issued for Permitting Use			
0	9/8/04	Issued for Permitting Use	DLA	JRD	APR

PLANT ITEM MATERIAL SELECTION DATA SHEET

Corrosion Considerations:

Vessel receives eluate from CNP-BRKPT-00002 and transfers the cesium concentrate to HLP-VSL-00029 or HLP-VSL-00027B via lute pot CNP-VSL-00002. Operating temperature range is 122 °F to 140 °F.

a General Corrosion
Davis (1994) states the corrosion rate for 304L in nitric acid will be less than about 0.1 mpy at the bulk temperatures. Normally, at these conditions, zirconium or titanium would be recommended, and a corrosion allowance of as much as 0.8 inches would be needed for a 40 y design life. However, the presence of fluoride will prevent the use of zirconium or titanium. C-22 has a corrosion rate of about 1 mpy in 5 % HNO_3 at boiling. In these solutions with <5 % HNO_3 and <1 % HCl, the corrosion rate will be smaller. The HF is complexed by the excess Al^{+++} and is expected to have little effect.

Conclusion:
In the presence of expected levels of halides, a high nickel alloy such as C-22 will be required. The standard corrosion allowance of 0.04 inch will be acceptable.

b Pitting Corrosion
With C-22, pitting is not expected to be a problem.

Conclusion:
No significant pitting is expected.

c End Grain Corrosion
Not believed to be applicable to this system.

Conclusion:
Not applicable to this system.

d Stress Corrosion Cracking
C-22 is not susceptible to stress corrosion cracking under these conditions.

Conclusion:
Not anticipated.

e Crevice Corrosion
See Pitting.

Conclusion:
See Pitting.

f Corrosion at Welds
Corrosion at welds is not a problem in the proposed environment.

Conclusion:
Weld corrosion is not a concern in this system.

g Microbiologically Induced Corrosion (MIC)
The proposed operating conditions are not conducive for MIC.

Conclusion:
MIC is not considered a problem.

h Fatigue/Corrosion Fatigue
Corrosion fatigue is a not expected to be a concern.

Conclusions
Not expected to be a concern.

PLANT ITEM MATERIAL SELECTION DATA SHEET

i Vapor Phase Corrosion
A potential problem with condensing acids. C-22 is expected to be sufficiently resistant as to eliminate this concern.

Conclusion:
Not expected to be a concern.

j Erosion
There are no solids and the velocities are low. Erosion allowance of 0.004 inch for components with low solids content (< 2 wt%) at low velocities is based on 24590-WTP-RPT-M-04-0008.

Conclusion:
Not expected to be a concern.

k Galling of Moving Surfaces
Not applicable.

Conclusion:
Not applicable.

l Fretting/Wear
No contacting surfaces expected.

Conclusion:
Not applicable.

m Galvanic Corrosion
No dissimilar metals are present.

Conclusion:
Not applicable.

n Cavitation
None expected.

Conclusion:
Not believed to be of concern.

o Creep
The temperatures are too low to be a concern.

Conclusion:
Not applicable.

p Inadvertent Nitric Acid Addition
Vessel normally operates at low pH.

Conclusion:
Not applicable.

PLANT ITEM MATERIAL SELECTION DATA SHEET

References:

1. 24590-WTP-RPT-M-04-0008, Rev. 2, *Evaluation of Stainless Steel Wear Rates in WTP Waste Streams at Low Velocities,*
2. 24590-WTP-RPT-PR-04-0001, Rev. B, *WTP Process Corrosion Data*
3. Davis, JR (Ed), 1994, *Stainless Steels*, In ASM Metals Handbook, ASM International, Metals Park, OH 44073

Bibliography:

1. CCN 130171, Ohl, PC to PG Johnson, Internal Memo, Westinghouse Hanford Co, *Technical Bases for Cl- and pH Limits for Liquid Waste Tank Cars*, MA: PCO:90/01, January 16, 1990
2. Agarwal, DC, *Nickel and Nickel Alloys*, In: Revie, WW, 2000. *Uhlig's Corrosion Handbook*, 2nd Edition, Wiley-Interscience, New York, NY 10158
3. Cole, HS, 1974, *Corrosion of Austenitic Stainless Steel Alloys Due to HNO_3 – HF Mixtures*, ICP-1036, Idaho Chemical Programs – Operations Office, Idaho Falls, ID
4. Davis, JR (Ed), 1987, *Corrosion, Vol 13*, In "Metals Handbook", ASM International, Metals Park, OH 44073
5. Hamner, NE, 1981, *Corrosion Data Survey*, Metals Section, 5th Ed, NACE International, Houston, TX
6. Jones, RH (Ed.), 1992, *Stress-Corrosion Cracking*, ASM International, Metals Park, OH 44073
7. Lustman, B and F Kerze (Editors), 1955, *The Metallurgy of Zirconium*, McGraw-Hill, New York, NY
8. Phull, BS, WL Mathay, & RW Ross, 2000, *Corrosion Resistance of Duplex and 4-6% Mo-Containing Stainless Steels in FGD Scrubber Absorber Slurry Environments*, Presented at Corrosion 2000, Orlando, FL, March 26-31, 2000, NACE International, Houston TX 77218
9. Sedriks, AJ, 1996, *Corrosion of Stainless Steels*, John Wiley & Sons, Inc., New York, NY 10158
10. Uhlig, HH, 1948, *Corrosion Handbook*, John Wiley & Sons, New York, NY 10158
11. Van Delinder, LS (Ed), 1984, *Corrosion Basics*, NACE International, Houston, TX 77084
12. Wilding, MW and BE Paige, 1976, *Survey on Corrosion of Metals and Alloys in Solutions Containing Nitric Acid*, ICP-1107, Idaho Chemical Programs, Idaho National Engineering Laboratory, Idaho Falls, ID

PLANT ITEM MATERIAL SELECTION DATA SHEET

24590-WTP-RPT-PR-04-0001, Rev. B
WTP Process Corrosion Data

PROCESS CORROSION DATA SHEET

Component(s) (Name/ID #) Cs evaporator separator vessel (CNP-EVAP-00001)
Cs concentrate reboiler (CNP-HX-00001)

Facility PTF

In Black Cell? Yes (CNP-EVAP-00001 only)

Chemicals	Unit[1]	Contract Max		Non-Routine		Notes
		Leach	No leach	Leach	No Leach	
Aluminum	g/l	1.38E+01	1.29E+01			
Chloride	g/l	5.29E+00	5.89E+00			
Fluoride	g/l	6.28E+00	7.02E+00			
Iron	g/l	1.01E+00	1.05E+00			
Nitrate	g/l	5.78E+02	5.80E+02			
Nitrite	g/l	2.93E+01	3.25E+01			
Phosphate	g/l	2.11E+01	2.30E+01			
Sulfate	g/l	1.12E+01	1.25E+01			
Mercury	g/l	1.72E-02	7.88E-03			
Carbonate	g/l	3.95E+01	4.03E+01			
Undissolved solids	wt%					
Other (NaMnO4, Pb,...)	g/l					
Other	g/l					
pH	N/A					Note 2
Temperature	°F					Note 3

List of Organic Species:

References

System Description: 24590-PTF-3YD-CNP-00001, Rev 0
Mass Balance Document: 24590-WTP-M4C-V11T-00005, Rev A
Normal Input Stream #: CNP02, CNP03,CNP12, CNP10,CNP20
Off Normal Input Stream # (e.g., overflow from other vessels): N/A
P&ID: N/A
PFD: 24590-PTF-M5-V17T-P0014, Rev 1
Technical Reports: N/A

Notes:

1. Concentrations less than 1x 10^{-4} g/l do not need to be reported; list values to two significant digits max.
2. pH approximately 0.3 to 14. Operates primarily at acidic end, NaOH added prior to transfer out. Minimum pH based on 0.5 M nitric acid.
3. Tnormal operation 122 °F to 140 °F (24590-PTF-M5C-CNP-00001, Rev 0)

Assumptions:

Breakpot CNP-BRKT-00001 and CNP-VSL-00003 are for non-routine use and are normally empty. These vessels can receive a range of evaporator concentrate.

PLANT ITEM MATERIAL SELECTION DATA SHEET

4.1.4 Cs Evaporator Separator Vessel (CNP-EVAP-00001), Cs Evaporator Concentrate Reboiler (CNP-HX-00001), and Eluate Contingency Storage Vessel (CNP-VSL-00003)

Routine Operations

Eluate from CNP-BRKPT-00002 is gravity-fed through a lute pot, CNP-VSL-00001, into the separator vessel, CNP-EVAP-00001. The Cs evaporator eluate lute pot, CNP-VSL-00001, provides a vacuum seal between CNP-BRKPT-00002 and the Cs evaporator separator vessel, CNP-EVAP-00001. The cesium concentrate is transferred from the Cs evaporator separator vessel using transfer ejectors to send it to vessel HLP-VSL-00028 or HLP-VSL-00027B in the HLP system.

Non-Routine Operations that Could Affect Corrosion/Erosion

If the HLP system cannot accept additional volume at the time of a required transfer, the eluate contingency storage vessel, CNP-VSL-00003, will receive the transfer.

PLANT ITEM MATERIAL SELECTION DATA SHEET

R10685020

CNP-VSL-00004 (PTF)
Cs Evaporator Recovered Nitric Acid Vessel

- Design Temperature (°F)(Max/min): 255/40
- Design Pressure (psig) (Max/min): 15/FV
- Location: incell
- PJM Discharge Velocity (fps): 40
- Drive Cycle: 17 % (at 40 fps)

ISSUED BY
RPP-WTP PDC

Offspring items

CNP-PJM-00019 – CNP-PJM-00022
CNP-VSL-00162, CNP-RFD-00005

Contents of this document are Dangerous Waste Permit affecting

Operating conditions are as stated on attached Process Corrosion Data Sheet

Operating Modes Considered:

- The vessel is at the stated pH at the normal operating temperature

Materials Considered:

Material (UNS No,.)	Relative Cost	Acceptable Material	Unacceptable Material
Carbon Steel	0.23		X
304L (S30403)	1.00	X	
316L (S31603)	1.18	X	
6% Mo (N08367/N08926)	7.64	X	
Alloy 22 (N06022)	11.4	X	
Ti-2 (R50400)	10.1		X

Recommended Material: 304 (max 0.030% C; dual certified)

Recommended Corrosion Allowance: 0.040 inch (includes 0.024 inch corrosion allowance and 0.004 inch erosion allowance)

Process & Operations Limitations:

- Develop rinsing/flushing procedure for acid and water

STEVEN WAKEMAN VAIL
STATE OF WASHINGTON
39250
REGISTERED PROFESSIONAL ENGINEER
6/13/06
EXPIRES: 12/07/07

Please note that source, special nuclear and byproduct materials, as defined in the Atomic Energy Act of 1954 (AEA), are regulated at the U.S. Department of Energy (DOE) facilities exclusively by DOE acting pursuant to its AEA authority. DOE asserts, that pursuant to the AEA, it has sole and exclusive responsibility and authority to regulate source, special nuclear, and byproduct materials at DOE-owned nuclear facilities. Information contained herein on radionuclides is provided for process description purposes only.

This bound document contains a total of 6 sheets.

REV	DATE	REASON FOR REVISION	PREPARER	CHECKER	APPROVER
3	6/13/06	Issued for Permitting Use		HMK	
2	1/25/05	Issued for Permitting Use	DLA	JRD	SWV
1	6/25/04	Issued for Permitting Use	DLA	APR	SWV
0	1/13/03	Issues for Permitting Use	DLA	JRD	SWV

PLANT ITEM MATERIAL SELECTION DATA SHEET

Corrosion Considerations:

CNP-VSL-00004 stores recovered nitric acid from CNP-DISTC-00001 at between 115 °F and 140 °F.

a General Corrosion
Hamner (1981) lists a corrosion rate for 304 (and 304L) in 2 M HNO_3 of less than 2 mpy. Davis (1994) states the corrosion rate for 304L in 12% HNO_3 will be less than about 1 mpy up to about 212°F.

Conclusion:
304L is expected to be sufficiently resistant to the waste solution with a probable general corrosion rate of less than 1 mpy.

b Pitting Corrosion
With the stated conditions, 304L will be adequate.

Conclusion:
The data provided suggest there are insufficient halides to cause pitting and 304L would be adequate.

c End Grain Corrosion
Not believed to be applicable to this system.

Conclusion:
Not applicable to this system.

d Stress Corrosion Cracking
The exact amount of chloride required to stress corrosion crack stainless steel is unknown. In part this is because the amount varies with temperature, metal sensitization, and the environment. But it is also unknown because chloride tends to concentrate under heat transfer conditions, by evaporation, and electrochemically during a corrosion process. Hence, even as little as a few ppm can lead to cracking under some conditions. Generally, as seen in Sedriks (1996) and Davis (1987), stress corrosion cracking does not usually occur below about 140°F. Further, the use of "L" grade stainless reduces the opportunity for sensitization. At the concentrations of chloride expected, 304L will be satisfactory.

Conclusion:
The use of 304L is expected to be acceptable for chloride free conditions.

e Crevice Corrosion
See Pitting.

Conclusion:
See Pitting

f Corrosion at Welds
Corrosion at welds is not considered a problem in the proposed environment.

Conclusion:
Weld corrosion is not considered a problem for this system.

g Microbiologically Induced Corrosion (MIC)
The proposed operating conditions are generally not acceptable for MIC.

Conclusion:
Not considered a concern.

h Fatigue/Corrosion Fatigue
Corrosion fatigue is not expected to be a concern.

Conclusions
Not a concern.

i Vapor Phase Corrosion
Not expected to be a concern.

Conclusion:
Vapor phase corrosion is not expected.

PLANT ITEM MATERIAL SELECTION DATA SHEET

j Erosion
Based on past experiments by Smith & Elmore (1992), the solids are soft and erosion is not expected to be a concern for the vessel wall. Based on 24590-WTP-RPT-M-04-0008, a general erosion allowance of 0.004 inch is adequate for components with solids content less than 2 wt%. Because of the negligible concentration of undissolved solids, no localized protection is necessary for the applicable portions of the bottom head to accommodate PJM discharge velocities of up to 12 m/s for a usage of 100 % operation as documented in 24590-WTP-M0E-50-00003.

The PJM nozzle requires no additional protection as documented in 24590-WTP-M0E-50-00003.

Conclusion:
The recommended corrosion allowance provides sufficient protection for erosion of the vessel.

k Galling of Moving Surfaces
Not applicable.

Conclusion:
Not applicable.

l Fretting/Wear
No contacting surfaces expected.

Conclusion:
Not applicable.

m Galvanic Corrosion
No dissimilar metals are present.

Conclusion:
Not applicable.

n Cavitation
None expected.

Conclusion:
Not believed to be of concern.

o Creep
The temperatures are too low to be a concern.

Conclusion:
Not applicable.

p Inadvertent Nitric Acid Addition
Vessel routinely operates at low pH.

Conclusion:
Not applicable.

PLANT ITEM MATERIAL SELECTION DATA SHEET

References:

1. 24590-WTP-M0E-50-00003, *Wear Allowance for WTP Waste Slurry Systems*
2. 24590-WTP-RPT-M-04-0008, Rev. 2, *Evaluation Of Stainless Steel Wear Rates In WTP Waste Streams At Low Velocities*
3. 24590-WTP-RPT-PR-04-0001, Rev. B, *WTP Process Corrosion Data*
4. Davis, JR (Ed), 1987, *Corrosion, Vol 13*, In "Metals Handbook", ASM International, Metals Park, OH 44073
5. Davis, JR (Ed), 1994, *Stainless Steels*, In ASM Metals Handbook, ASM International, Metals Park, OH 44073
6. Hamner, NE, 1981, *Corrosion Data Survey*, Metals Section, 5th Ed, NACE International, Houston, TX
7. Sedriks, AJ, 1996, *Corrosion of Stainless Steels*, John Wiley & Sons, Inc., New York, NY 10158
8. Smith, H. D. and M. R. Elmore, 1992, *Corrosion Studies of Carbon Steel under Impinging Jets of Simulated Slurries of Neutralized Current Acid Waste (NCAW) and Neutralized Cladding Removal Waste (NCRW)*, PNL-7816, Pacific Northwest Laboratory, Richland, Washington.

Bibliography:

1. Agarwal, DC, *Nickel and Nickel Alloys*, In: Revie, WW, 2000. *Uhlig's Corrosion Handbook*, 2nd Edition, Wiley-Interscience, New York, NY 10158
2. Cole, HS, 1974, *Corrosion of Austenitic Stainless Steel Alloys Due to HNO_3 – HF Mixtures*, ICP-1036, Idaho Chemical Programs – Operations Office, Idaho Falls, ID
3. Jones, RH (Ed.), 1992, *Stress-Corrosion Cracking*, ASM International, Metals Park, OH 44073
4. Ohl, PC to PG Johnson, Internal Memo, Westinghouse Hanford Co, *Technical Bases for Cl- and pH Limits for Liquid Waste Tank Cars*, MA: PCO:90/01, January 16, 1990.
5. Phull, BS, WL Mathay, & RW Ross, 2000, *Corrosion Resistance of Duplex and 4-6% Mo-Containing Stainless Steels in FGD Scrubber Absorber Slurry Environments*, Presented at Corrosion 2000, Orlando, FL, March 26-31, 2000, NACE International, Houston TX 77218.
6. Uhlig, HH, 1948, *Corrosion Handbook*, John Wiley & Sons, New York, NY 10158
7. Van Delinder, LS (Ed), 1984, *Corrosion Basics*, NACE International, Houston, TX 77084
8. Wilding, MW and BE Paige, 1976, *Survey on Corrosion of Metals and Alloys in Solutions Containing Nitric Acid*, ICP-1107, Idaho Chemical Programs, Idaho National Engineering Laboratory, Idaho Falls, ID,

PLANT ITEM MATERIAL SELECTION DATA SHEET

24590-WTP-RPT-PR-04-0001, Rev. B
WTP Process Corrosion Data

PROCESS CORROSION DATA SHEET

Component(s) (Name/ID #) Evaporator recovered nitric acid vessel (CNP-VSL-00004)
Cs evaporator nitric acid distillation column (CNP-DISTC-00001)

Facility PTF

In Black Cell? Yes (only CNP-VSL-00004)

Chemicals	Unit[1]	Contract Max		Non-Routine		Notes
		Leach	No leach	Leach	No Leach	
Aluminum	g/l	3.84E-04	3.86E-04			
Chloride	g/l	4.28E-04	5.12E-04			
Fluoride	g/l					
Iron	g/l					
Nitrate	g/l					Assumption 1
Nitrite	g/l	5.11E-04	6.11E-04			
Phosphate	g/l	8.88E-04	1.04E-03			
Sulfate	g/l	3.36E-04	4.01E-04			
Mercury	g/l					
Carbonate	g/l	1.66E-03	1.82E-03			
Undissolved solids	wt%					
Other (NaMnO4, Pb,...)	g/l					
Other	g/l					
pH	N/A					Note 3
Temperature	°F					Note 2
						Note 4

List of Organic Species:

References

System Description: 24590-PTF-3YD-CNP-00001, Rev 0
Mass Balance Document: 24590-WTP-M4C-V11T-00005, Rev A
Normal Input Stream #: CNP13, CNP14
Off Normal Input Stream # (e.g., overflow from other vessels): N/A
P&ID: N/A
PFD: 24590-PTF-M5-V17T-P0014, Rev 1
Technical Reports: N/A

Notes:

1. Concentrations less than 1x 10^{-4} g/l do not need to be reported; list values to two significant digits max.
2. Tnormal operation 115 °F to 140 °F (24590-PTF-M5C-CNP-00001, Rev 0)
3. Will be highly acidic. pH approximately 0.3
4. 2M nitric acid is added to the vessel.

Assumptions:

1. Based on the presence of 0.5M HNO_3 the nitrate concentration is expected to be approximately 31 g/l (24590-WTP-M4E-V11T-00001, Rev A)

PLANT ITEM MATERIAL SELECTION DATA SHEET

4.1.3 Cs Evaporator Nitric Acid Distillation Column (CNP-DISTC-00001), Cs Evaporator Recovered Nitric Acid Vessel (CNP-VSL-00004)

Routine Operations

Nitric acid vapor enters the nitric acid distillation column, CNP-DISTC-00001, which separates water from the acid. The recovered nitric acid is stored in the Cs evaporator recovered nitric acid vessel CNP-VSL-00004. During elution, nitric acid is pumped from the storage vessel by the Cs IX feed pump, through the feed cooler, and distributed into the system CXP ion exchange columns.

Non-Routine Operations that Could Affect Corrosion/Erosion

None identified.

PLANT ITEM MATERIAL SELECTION DATA SHEET

R10666998

CNP-BRKPT-00002 (PTF)
Cs Eluate Breakpot

ISSUED BY
RPP-WTP PDC

- Design Temperature (°F) (max/min): 372/40
- Design Pressure (psig) (internal/external): 15/FV
- Location: incell

Contents of this document are Dangerous Waste Permit affecting

Operating conditions are as stated on attached Process Corrosion Data Sheet

Operating Modes Considered:

- The breakpot is normally empty and at ambient temperature.
- Operation at temperatures approaching the maximum design temperature is expected to be of short duration.

Materials Considered:

Material (UNS No.)	Relative Cost	Acceptable Material	Unacceptable Material
Carbon Steel	0.23		X
304L (S30403)	1.00	X	
316L (S31603)	1.18	X	
6% Mo (N08367/N08926)	7.64	X	
Alloy 22 (N06022)	11.4	X	
Ti-2 (R50400)	10.1		X

Recommended Material: 304 (max 0.030% C; dual certified)

Recommended Corrosion Allowance: 0.040 inch (includes 0.024 inch corrosion allowance and 0.004 inch erosion allowance)

Process & Operations Limitations:

- Develop procedure to flush thoroughly with water after use with alkaline solution.

STEVEN WAKEMAN VAIL
STATE OF WASHINGTON
39250
REGISTERED PROFESSIONAL ENGINEER
3/8/06
EXPIRES: 12/07/07

Please note that source, special nuclear and byproduct materials, as defined in the Atomic Energy Act of 1954 (AEA), are regulated at the U.S. Department of Energy (DOE) facilities exclusively by DOE acting pursuant to its AEA authority. DOE asserts, that pursuant to the AEA, it has sole and exclusive responsibility and authority to regulate source, special nuclear, and byproduct materials at DOE-owned nuclear facilities. Information contained herein on radionuclides is provided for process description purposes only.

This bound document contains a total of 6 sheets.

REV	DATE	REASON FOR REVISION	PREPARER	CHECKER	APPROVER
1	3/8/06	Issued for Permitting Use		HMK	
0	6/22/04	Issued for Permitting Use	DLA	JRD	APR

PLANT ITEM MATERIAL SELECTION DATA SHEET

Corrosion Considerations:

During the elution cycle the eluate comes from CXP-IXC-00001/2/3/4 to CNP-BRKPT-00002 and then to CNP-VSL-00001. The elution cycle is 15 hrs and is normally at an ambient temperature of 77 °F. The maximum operating temperature of 140 °F is attributed to circumstances where neutralized Cs concentrate (approx pH 14) could be transferred from CNP-VSL-00003 (the contingency vessel) to CNP-BRKPT-00002. However, this is not a likely route for transfer and for the purposes of this evaluation are considered infrequent. The breakpot could also see steam temperatures during transfer. These high-temperature conditions are assumed to be of short duration. This evaluation is based on a nominal operating temperature of 77 °F.

a General Corrosion
At the expected pH, little specific information was found for the general/uniform corrosion of stainless steels or other material in the given waste. Typically, the austenitic and higher alloy steels are expected to have corrosion rates of less than about 4 mpy in HNO_3 at the maximum temperature. This lack of data is not critical because the alloys needed for the system typically fail by pitting, crevice corrosion, or cracking.

Hamner (1981) lists the corrosion rate for both 304L and 316L as < 2 mpy at temperatures up to 150°F. Based on estimates from Cole (1974), corrosion rates for all of the concentrations <4 M and at temperatures to boiling are expected to be less than 1 mpy.

Conclusion:
Under the stated conditions, 304L is expected to be sufficiently resistant to the waste solution with a probable general corrosion rate of less than 1 mpy at up to 150°F.

b Pitting Corrosion
With the stated conditions, 304L will be adequate.

Conclusion:
The data from the flowsheets suggest there are insufficient halides to cause pitting in 304L.

c End Grain Corrosion
Not believed to be applicable to this system.

Conclusion:
Not applicable to this system.

d Stress Corrosion Cracking
The exact amount of chloride required to stress corrosion crack stainless steel is unknown. In part this is because the amount varies with temperature, metal sensitization, and the environment. But it is also unknown because chloride tends to concentrate under heat transfer conditions, by evaporation, and electrochemically during a corrosion process. Hence, even as little as a few ppm can lead to cracking under some conditions. Generally, as seen in Sedriks (1996) and Davis (1981), stress corrosion cracking does not usually occur below about 140°F. Further, the use of "L" grade stainless reduces the opportunity for cracking.

Conclusion:
The use of 304L is recommended.

e Crevice Corrosion
See Pitting.

Conclusion:
See Pitting.

f Corrosion at Welds
Corrosion at welds is not a problem in the proposed environment.

Conclusion:
Weld corrosion is not considered a problem.

g Microbiologically Induced Corrosion (MIC)
The proposed operating conditions are not suitable for MIC.

Conclusion:
MIC is not considered a problem.

h Fatigue/Corrosion Fatigue
Corrosion fatigue is not expected to be a concern.

Conclusions
Not believed to be a concern.

PLANT ITEM MATERIAL SELECTION DATA SHEET

i Vapor Phase Corrosion
Vapor phase corrosion is not expected to be a concern. Further, the presence of wash rings indicates deposits can be prevented.

Conclusion:
Not expected to be a concern.

j Erosion
Velocities within the vessel are expected to be low. Erosion allowance of 0.004 inch for components with low solids content (< 2 wt%) at low velocities is based on 24590-WTP-RPT-M-04-0008.

Conclusion:
Not expected to be a concern.

k Galling of Moving Surfaces
Not applicable.

Conclusion:
Not applicable.

l Fretting/Wear
No contacting surfaces expected.

Conclusion:
Not applicable.

m Galvanic Corrosion
No dissimilar metals are present.

Conclusion:
None anticipated.

n Cavitation
None expected.

Conclusion:
Not believed to be of concern.

o Creep
The temperatures are too low to be a concern.

Conclusion:
Not applicable.

p Inadvertent Nitric Acid Addition
Breakpot will see low pH conditions during normal operations.

Conclusion:
Not applicable.

PLANT ITEM MATERIAL SELECTION DATA SHEET

References:

1. 24590-WTP-RPT-M-04-0008, Rev. 2, *Evaluation Of Stainless Steel Wear Rates In WTP Waste Streams At Low Velocities*
2. 24590-WTP-RPT-PR-04-0001, Rev. B, *WTP Process Corrosion Data*
3. CCN 130176, Cole, HS, 1974, *Corrosion of Austenitic Stainless Steel Alloys Due to HNO_3 – HF Mixtures*, ICP-1036, Idaho Chemical Programs – Operations Office, Idaho Falls, ID
4. Davis, JR (Ed), 1987, *Corrosion, Vol 13*, In "Metals Handbook", ASM International, Metals Park, OH 44073
5. Hamner, NE, 1981, *Corrosion Data Survey*, Metals Section, 5th Ed, NACE International, Houston, TX
6. Sedriks, AJ, 1996, *Corrosion of Stainless Steels*, John Wiley & Sons, Inc., New York, NY 10158

Bibliography:

1. CCN 130171, Ohl, PC to PG Johnson, Internal Memo, Westinghouse Hanford Co, *Technical Bases for Cl- and pH Limits for Liquid Waste Tank Cars*, MA: PCO:90/01, January 16, 1990.
2. Davis, JR (Ed), 1994, *Stainless Steels*, In ASM Metals Handbook, ASM International, Metals Park, OH 44073
3. Jones, RH (Ed.), 1992, *Stress-Corrosion Cracking*, ASM International, Metals Park, OH 44073
4. Uhlig, HH, 1948, *Corrosion Handbook*, John Wiley & Sons, New York, NY 10158
5. Van Delinder, LS (Ed), 1984, *Corrosion Basics*, NACE International, Houston, TX 77084
6. Wilding, MW and BE Paige, 1976, *Survey on Corrosion of Metals and Alloys in Solutions Containing Nitric Acid*, ICP-1107, Idaho Chemical Programs, Idaho National Engineering Laboratory, Idaho Falls, ID

PLANT ITEM MATERIAL SELECTION DATA SHEET

24590-WTP-RPT-PR-04-0001, Rev. B
WTP Process Corrosion Data

PROCESS CORROSION DATA SHEET

Component(s) (Name/ID #) Cs concentrate breakpot (CNP-BRKPT-00002)
Cs evaporator eluate lute pot (CNP-VSL-00001

Facility PTF

In Black Cell? Yes

Chemicals	Unit[1]	Contract Max		Non-Routine [3]		Notes
		Leach	No leach	Leach	No Leach	
Aluminum	g/l	2.30E-01	2.31E-01			
Chloride	g/l	8.85E-02	1.06E-01			
Fluoride	g/l	1.05E-01	1.26E-01			
Iron	g/l	1.69E-02	1.89E-02			
Nitrate	g/l	1.54E+01	8.61E+00	4.46E-04	4.46E-04	
Nitrite	g/l	4.88E-01	5.83E-01			
Phosphate	g/l	3.53E-01	4.13E-01			
Sulfate	g/l	1.88E-01	2.24E-01			
Mercury	g/l	5.47E-04	1.42E-04			
Carbonate	g/l	6.59E-01	7.24E-01			
Undissolved solids	wt%					
Other (NaMnO4, Pb,...)	g/l					
Other	g/l					
pH	N/A					Assumption 1
Temperature	°F					Note 2

List of Organic Species:

References

System Description: 24590-PTF-3YD-CNP-00001, Rev 0
Mass Balance Document: 24590-WTP-M4C-V11T-00005, Rev A
Normal Input Stream #: CXP11, CXP12, CNP02
Off Normal Input Stream # (e.g., overflow from other vessels): CNP01 acid charge
P&ID: N/A
PFD: 24590-PTF-M5-V17T-P0014, Rev 1
Technical Reports: N/A

Notes:

1. Concentrations less than 1x 10^{-4} g/l do not need to be reported; list values to two significant digits max.
2. Breakpot: Steam is used for transfer. The breakpot is normally empty and at ambient temperature most of the time.
   Vessel: Tnormal operating range 77 °F (eluate) to 140 °F (24590-PTF-M5C-CNP-00001, Rev 0)
3. Nitric acid charge (CNP01)

Assumptions:

1. Stream CXP12 post elution rinse pH approx 0.5, CXP11 elution stream pH approx. 0.3 or more.

4.1.2 Cs Concentrate Breakpot (CNP-BRKPT-00002), Cs Evaporator Eluate Lute Pot (CNP-VSL-00001)

Routine Operations

Under normal operations, the eluant from the IX columns goes directly to the Cs concentrate breakpot, CNP-BRKPT-00002. Eluate is then gravity-fed through a lute pot, CNP-VSL-00001, into the separator vessel, CNP-EVAP-00001. CNP-BRKPT-00002 is vented to the vessel vent system and contains wash rings and purge air.

Non-Routine Operations that Could Affect Corrosion/Erosion

None identified.

PLANT ITEM MATERIAL SELECTION DATA SHEET

R10685021

CNP-VSL-00003 (PTF)

Eluate Contingency Storage Vessel

- Design Temperature (°F)(max/min): 255/40
- Design Pressure (psig) (max/min): 15/FV
- Location: incell
- PJM Discharge Velocity (fps): 40
- Drive Cycle: 17 % (at 40 fps)

ISSUED BY
RPP-WTP PDC

Off spring items

CNP-PJM-00013, CNP-PJM-00014, CNP-PJM-00015, CNP-PJM-00016, CNP-VSL-00166, CNP-RFD-00003

Contents of this document are Dangerous Waste Permit affecting

Operating conditions are as stated on attached Process Corrosion Data Sheet

Operating Modes Considered:

- The vessel is pH 0.3 at the normal operating temperature
- The vessel is pH 14 at the normal operating temperature
- Caustic available to wash rings and for neutralization prior to transfer

Materials Considered:

Material (UNS No.)	Relative Cost	Acceptable Material	Unacceptable Material
Carbon Steel	0.23		X
304L (S30403)	1.00	X (jacket only)	
316L (S31603)	1.18	X	
6% Mo (N08367/N08926)	7.64	X	
Alloy 22 (N06022)	11.4	X	
Ti-2 (R50400)	10.1		X

Recommended Material: Vessel: 316 (max 0.030% C; dual certified), or better
Jacket: 304 (max 0.030% C; dual certified), or better

Recommended Corrosion Allowance: 0.040 inch (includes 0.024 inch corrosion allowance and 0.016 inch general erosion allowance; additional localized protection required and discussed in section j)

Process & Operations Limitations:

- Develop procedure for thorough flushing/rinsing prior to addition of acid solutions.

STEVEN WAKEMAN VAIL
STATE OF WASHINGTON
39250
REGISTERED PROFESSIONAL ENGINEER
EXPIRES: 12/07/07

6/13/06

Please note that source, special nuclear and byproduct materials, as defined in the Atomic Energy Act of 1954 (AEA), are regulated at the U.S. Department of Energy (DOE) facilities exclusively by DOE acting pursuant to its AEA authority. DOE asserts, that pursuant to the AEA, it has sole and exclusive responsibility and authority to regulate source, special nuclear, and byproduct materials at DOE-owned nuclear facilities. Information contained herein on radionuclides is provided for process description purposes only.

This bound document contains a total of 7 sheets.

REV	DATE	REASON FOR REVISION	PREPARER	CHECKER	APPROVER
1	6/13/06	Issued for Permitting Use		HMK	
0	6/25/04	Issued for Permitting Use	DLA	JRD	APR

PLANT ITEM MATERIAL SELECTION DATA SHEET

Corrosion Considerations:

Vessel is available to receive Cs concentrate and Cs eluate from the Cs evaporator breakpot. Also, if the HLP system cannot accept a required transfer, CNP-VSL-00003 is available to receive the transfer.

a General Corrosion
Hamner (1981) lists a corrosion rate for 304 (and 304L) in NaOH of less than 20 mpy (500 μm/y) at 77°F and over 20 mpy at 122°F. He shows 316 (and 316L) has a rate of less than 2 mpy up to 122°F and 50% NaOH. Dillon (2000) and Sedriks (1996) both state that the 300 series alloys are acceptable in up to 50% NaOH at temperatures up to about 122°F or slightly above. Davis (1994) states the corrosion rate for 304L in pure NaOH will be less than about 0.1 mpy up to about 212°F though Sedriks states the data beyond about 122°F are incorrect. Uhlig (1948) shows the rate in water is < 1 mpy.

Hamner (1981) lists a corrosion rate for 304 (and 304L) in 2 M HNO_3 of less than 2 mpy. Davis (1994) states the corrosion rate for 304L in 12% HNO_3 will be less than about 1 mpy up to about 212°F.

Conclusion:
316L is expected to be sufficiently resistant to the waste solution with a probable general corrosion rate of less than 1 mpy under all expected conditions.

b Pitting Corrosion
Chloride is notorious for causing pitting in acid and neutral solutions. Dillon (2000) is of the opinion that in alkaline solutions chlorides are likely to promote pitting only in tight crevices. At pH < 12, chloride can be a concern. However, Revie (2000) and Uhlig (1948) both note nitrate inhibits chloride corrosion. Therefore the nitrate concentrations in the solution are expected to be beneficial and either 304L or 316L can be used if the chloride conditions stated are met.

Some potential exists for pitting if the vessel contains waste, cooling fails and the solution begins to evaporate. Then chloride could concentrate at the interface making 316L marginal. However, conditions with hot solution are not anticipated.

Conclusion:
Under the stated conditions, 316L is the minimum alloy recommended. Evaporative conditions with salt concentrations at the interface are not anticipated to be a frequent occurrence.

c End Grain Corrosion
Not applicable to this system.

Conclusion:
Not applicable to this system.

d Stress Corrosion Cracking
The exact amount of chloride required to stress corrosion crack stainless steel is unknown. In part this is because the amount varies with temperature, metal sensitization, and the environment. But it is also unknown because chloride tends to concentrate under heat transfer conditions, by evaporation, and electrochemically during a corrosion process. Hence, even as little as a few ppm can lead to cracking under some conditions. Generally, as seen in Sedriks (1996) and Davis (1987), stress corrosion cracking does not usually occur below about 140°F. Further, the use of "L" grade stainless reduces the opportunity for sensitization. The use of 316L is preferred over 304L because of greater cracking resistance.

According to Sedriks and Dillon (2000),, caustic cracking tends not to occur below 140°F, though Zapp suggests the temperature may be as high as 212°F. The high nitrate concentrations may inhibit pitting and cracking.

Some potential exists for cracking if the vessel contains waste, cooling fails and the solution begins to evaporate. Then chloride could concentrate at the interface making 316L marginal. However, conditions with hot solution are not anticipated.

Conclusion:
Because of the normal operating environment 316L stainless steel is expected to be acceptable. Evaporative conditions are not anticipated to be a frequent occurrence.

PLANT ITEM MATERIAL SELECTION DATA SHEET

e Crevice Corrosion
See Pitting.

Conclusion:
See Pitting

f Corrosion at Welds
Corrosion at welds is not considered a problem in the proposed environment.

Conclusion:
Weld corrosion is not considered a problem for this system .

g Microbiologically Induced Corrosion (MIC)
The proposed operating conditions are suitable for MIC. However, MIC is not normally observed in operating systems except for those exposed to untreated process water.

Conclusion:
MIC is not considered a problem.

h Fatigue/Corrosion Fatigue
Corrosion fatigue is a not expected to be a concern.

Conclusions
Not applicable.

i Vapor Phase Corrosion
Due to agitation, some splashing is expected. Therefore there will be liquids on the dome of the vessel. This is not expected to be a concern because of the high nitrate content.

Conclusion:
Vapor phase corrosion is not expected.

j Erosion
Based on past experiments by Smith & Elmore (1992), the solids are soft and erosion is not expected to be a concern for the vessel wall. Based on 24590-WTP-RPT-M-04-0008, a general erosion allowance of 0.016 inch is adequate for components with maximum solids content up to 27.3 wt%. Additional 316L stainless steel should be provided as localized protection for the applicable portions of the bottom head to accommodate PJM discharge velocities of up to 12 m/s with solids concentrations of 2 wt% for a usage of 11 % operation as documented in 24590-WTP-M0E-50-00003. CNP-VSL-00003 requires at least 0.016-inch additional protection. The 2 wt% is considered to be conservative and is based on the WTP Prime Contract maximum. During normal operation, the solids content of CNP-VSL-00003 is expected to be well below the anticipated maximum.

The wear of the PJM nozzles can occur from flow for both the discharge and reflood cycles of operation. At least 0.010–inch of additional 316L stainless steel should be provided on the inner surface of the PJM nozzle to accommodate wear due to PJM discharge and suction velocities with solids concentrations of 2 wt% for usage of 11 % operation as documented in 24590-WTP-M0E-50-00003.

Conclusion:
The recommended corrosion allowance provides sufficient protection for erosion of the vessel wall. Additional localized protection for the bottom head will accommodate PJM discharge velocities and for the PJM nozzles will accommodate PJM discharge and reflood velocities.

k Galling of Moving Surfaces
Not applicable.

Conclusion:
Not applicable.

l Fretting/Wear
No contacting surfaces expected.

Conclusion:
Not applicable.

PLANT ITEM MATERIAL SELECTION DATA SHEET

m Galvanic Corrosion
No dissimilar metals are present.

Conclusion:
Not applicable.

n Cavitation
None expected.

Conclusion:
Not believed to be of concern.

o Creep
The temperatures are too low to be a concern.

Conclusion:
Not applicable.

p Inadvertent Nitric Acid Addition
Vessel normally operates at low pH.

Conclusion:
Not applicable.

PLANT ITEM MATERIAL SELECTION DATA SHEET

References:

1. 24590-WTP-M0E-50-00003, *Wear Allowance for WTP Waste Slurry Systems*
2. 24590-WTP-RPT-M-04-0008, Rev. 2, *Evaluation Of Stainless Steel Wear Rates In WTP Waste Streams At Low Velocities*
3. 24590-WTP-RPT-PR-04-0001, Rev. B, *WTP Process Corrosion Data*
4. Davis, JR (Ed), 1987, *Corrosion, Vol 13*, In "Metals Handbook", ASM International, Metals Park, OH 44073
5. Davis, JR (Ed), 1994, *Stainless Steels*, In ASM Metals Handbook, ASM International, Metals Park, OH 44073
6. Dillon, CP (Nickel Development Institute), Personal Communication to J R Divine (ChemMet, Ltd., PC), 3 Feb 2000.
7. Hamner, NE, 1981, *Corrosion Data Survey*, Metals Section, 5th Ed, NACE International, Houston, TX
8. Revie, WW, 2000. *Uhlig's Corrosion Handbook*, 2nd Edition, Wiley-Interscience, New York, NY 10158
9. Sedriks, AJ, 1996, *Corrosion of Stainless Steels*, John Wiley & Sons, Inc., New York, NY 10158
10. Smith, H. D. and M. R. Elmore, 1992, *Corrosion Studies of Carbon Steel under Impinging Jets of Simulated Slurries of Neutralized Current Acid Waste (NCAW) and Neutralized Cladding Removal Waste (NCRW)*, PNL-7816, Pacific Northwest Laboratory, Richland, Washington.
11. Uhlig, HH, 1948, *Corrosion Handbook*, John Wiley & Sons, New York, NY 10158

Bibliography:

1. Agarwal, DC, *Nickel and Nickel Alloys*, In: Revie, WW, 2000. *Uhlig's Corrosion Handbook*, 2nd Edition, Wiley-Interscience, New York, NY 10158
2. Blackburn, LD to PG Johnson, Internal Memo, Westinghouse Hanford Co, *Evaluation of 240-AR Chloride Limit*, August 15, 1991.
3. Danielson, MJ & SG Pitman, 2000, *Corrosion Tests of 316L and Hastelloy C-22 in Simulated Tank Waste Solutions*, PNWD-3015 (BNFL-RPT-019, Rev 0), Pacific Northwest Laboratory, Richland WA.
4. Divine, JR, 1986, Letter to A.J. Diliberto, *Reports of Experimentation*, Battelle, Pacific Northwest Laboratories, Richland, WA 99352
5. Jones, RH (Ed.), 1992, *Stress-Corrosion Cracking*, ASM International, Metals Park, OH 44073
6. Ohl, PC to PG Johnson, Internal Memo, Westinghouse Hanford Co, *Technical Bases for Cl- and pH Limits for Liquid Waste Tank Cars*, MA: PCO:90/01, January 16, 1990.
7. Van Delinder, LS (Ed), 1984, *Corrosion Basics*, NACE International, Houston, TX 77084

PLANT ITEM MATERIAL SELECTION DATA SHEET

24590-WTP-RPT-PR-04-0001, Rev. B
WTP Process Corrosion Data

PROCESS CORROSION DATA SHEET

Component(s) (Name/ID #) Eluate contingency vessel (CNP-VSL-00003)
Eluate contingency breakpot (CNP-BRKPT-00001)

Facility PTF

In Black Cell? Yes

Chemicals	Unit[1]	Contract Max		Non-Routine 4		Notes
		Leach	No leach	Leach	No Leach	
Aluminum	g/l	1.17E+01	1.10E+01			
Chloride	g/l	4.51E+00	5.02E+00			
Fluoride	g/l	5.36E+00	5.98E+00			
Iron	g/l	8.60E-01	8.97E-01			
Nitrate	g/l	4.93E+02	4.94E+02			
Nitrite	g/l	2.49E+01	2.77E+01			
Phosphate	g/l	1.80E+01	1.96E+01			
Sulfate	g/l	9.58E+00	1.06E+01			
Mercury	g/l	1.47E-02	6.71E-03			
Carbonate	g/l	3.36E+01	3.43E+01			
Undissolved solids	wt%					
Other (NaMnO4, Pb,...)	g/l					
Other	g/l					
pH	N/A					Note 3
Temperature	°F					Note 2
						Note 4

List of Organic Species:

References

System Description: 24590-PTF-3YD-CNP-00001, Rev 0
Mass Balance Document: 24590-WTP-M4C-V11T-00005, Rev A
Normal Input Stream #: CNP12, CNP14, CXP11, CXP12
Off Normal Input Stream # (e.g., overflow from other vessels): N/A
P&ID: N/A
PFD: 24590-PTF-M5-V17T-P0014, Rev 1
Technical Reports: N/A

Notes:

1. Concentrations less than 1x 10^{-4} g/l do not need to be reported; list values to two significant digits max.
2. Steam is used for transfer. The breakpot is normally empty and at ambient temperature most of the time.
   CNP-VSL-00003: T normal operation 77 °F (eluate stream) to 140 °F (24590-PTF-M5C-CNP-00001, Rev 0)
3. Composition can vary and is received on a contingency basis.
   The vessel reveives Cs Eluate at low pH of approx. 0.3 or more, with low levels of Cl, F, etc, also can receive Cs Evap Concentrate that has been neutralized to pH approx. 14 with high levels of Cl, F, etc. Minumum pH based on 0.5M nitric acid
4. Note CXP11 has the same composition as CXP21 but CXP21 does not appear in the mass balance because it is a contingent stream to the vessel.

Assumptions:

This vessel is a contingency vessel and under normal operations contains a heel only. It is available to receive Cs Concentrate and Cs Eluate.

PLANT ITEM MATERIAL SELECTION DATA SHEET

4.1.4 Cs Evaporator Separator Vessel (CNP-EVAP-00001), Cs Evaporator Concentrate Reboiler (CNP-HX-00001), and Eluate Contingency Storage Vessel (CNP-VSL-00003)

Routine Operations

Eluate from CNP-BRKPT-00002 is gravity-fed through a lute pot, CNP-VSL-00001, into the separator vessel, CNP-EVAP-00001. The Cs evaporator eluate lute pot, CNP-VSL-00001, provides a vacuum seal between CNP-BRKPT-00002 and the Cs evaporator separator vessel, CNP-EVAP-00001. The cesium concentrate is transferred from the Cs evaporator separator vessel using transfer ejectors to send it to vessel HLP-VSL-00028 or HLP-VSL-00027B in the HLP system.

Non-Routine Operations that Could Affect Corrosion/Erosion

If the HLP system cannot accept additional volume at the time of a required transfer, the eluate contingency storage vessel, CNP-VSL-00003, will receive the transfer.

PLANT ITEM MATERIAL SELECTION DATA SHEET

R10667001

CNP-BRKPT-00001, (PTF)
Cs Concentrate Breakpot

- Design Temperature (°F) (max/min): 372/40
- Design Pressure (psig) (internal/external): 15/FV
- Location: incell

ISSUED BY
RPP-WTP PDC

Contents of this document are Dangerous Waste Permit affecting

Operating conditions are as stated on attached Process Corrosion Data Sheet

Operating Modes Considered:

- The vessel is normally empty and at ambient temperature

Materials Considered:

Material (UNS No.)	Relative Cost	Acceptable Material	Unacceptable Material
Carbon Steel	0.23		X
304L (S30403)	1.00		X
316L (S31603)	1.18	X	
6% Mo (N08367/N08926)	7.64	X	
Alloy 22 (N06022)	11.4	X	
Ti-2 (R50400)	10.1		X

Recommended Material: 316 (max 0.030% C; dual certified), or better

Recommended Corrosion Allowance: 0.040 inch (includes 0.024 inch corrosion allowance and 0.004 inch erosion allowance)

Process & Operations Limitations:

- Develop procedure for thorough removal of caustic solution by rinsing/flushing before adding acidic solutions.

STEVEN WAKEMAN VAIL
STATE OF WASHINGTON
39250
REGISTERED PROFESSIONAL ENGINEER
3/8/06
EXPIRES: 12/07/07

Please note that source, special nuclear and byproduct materials, as defined in the Atomic Energy Act of 1954 (AEA), are regulated at the U.S. Department of Energy (DOE) facilities exclusively by DOE acting pursuant to its AEA authority. DOE asserts, that pursuant to the AEA, it has sole and exclusive responsibility and authority to regulate source, special nuclear, and byproduct materials at DOE-owned nuclear facilities. Information contained herein on radionuclides is provided for process description purposes only.

This bound document contains a total of 6 sheets.

REV	DATE	REASON FOR REVISION	PREPARER	CHECKER	APPROVER
1	3/8/06	Issued for Permitting Use		HMK	SWV
0	6/23/04	Issued for Permitting Use	DLA	JRD	APR

PLANT ITEM MATERIAL SELECTION DATA SHEET

Corrosion Considerations:

This vessel is normally empty but is available to receive recovered acid flows from the Cs evaporator nitric acid rectifier or from the Cs ion exchange columns or Cs concentrate from the Cs evaporator separator vessel.

a General Corrosion
Hamner (1981) lists a corrosion rate for 304 (and 304L) in NaOH of less than 20 mpy (500 μm/y) at 77°F and over 20 mpy at 122°F. He shows 316 (and 316L) has a rate of less than 2 mpy up to 122°F and 50% NaOH. Dillon (2000) and Sedriks (1996) both state that the 300 series alloys are acceptable in up to 50% NaOH at temperatures up to about 122°F or slightly above. Davis (1994) states the corrosion rate for 304L in pure NaOH will be less than about 0.1 mpy up to about 212°F though Sedriks states the data beyond about 122°F are incorrect.

Hamner (1981) lists a corrosion rate for 304 (and 304L) in 2 M HNO_3 of less than 2 mpy. Davis (1994) states the corrosion rate for 304L in 12% HNO_3 will be less than about 1 mpy up to about 212°F.

Conclusion:
316L is expected to be sufficiently resistant to the waste solution with a probable general corrosion rate of less than 1 mpy at the stated conditions providing breakpots are flushed before acidic solutions are introduced.

b Pitting Corrosion
Chloride is notorious for causing pitting in acid and neutral solutions. Dillon (2000) is of the opinion that in alkaline solutions, pH>12, chlorides are likely to promote pitting only in tight crevices. At pH < 12, chloride can be a concern. However, Revie (2000) and Uhlig (1948) both note nitrate inhibits chloride corrosion. Therefore the nitrate concentration in the solution is expected to be beneficial and 316L can be used if the chloride concentration is not more than stated.

Conclusions
Under the stated conditions, 316L is the minimum alloy recommended.

c End Grain Corrosion
Not applicable to this system.

Conclusion:
Not applicable to this system.

d Stress Corrosion Cracking
The exact amount of chloride required to stress corrosion crack stainless steel is unknown. In part this is because the amount varies with temperature, metal sensitization, and the environment. But it is also unknown because chloride tends to concentrate under heat transfer conditions, by evaporation, and electrochemically during a corrosion process. Hence, even as little as a few ppm can lead to cracking under some conditions. Generally, as seen in Sedriks (1996) and Davis (1987), stress corrosion cracking does not usually occur below about 140°F. Further, the use of "L" grade stainless reduces the opportunity for sensitization to cracking.

Conclusions:
At the normal operating environment 316L stainless steel is expected to be acceptable.

e Crevice Corrosion
See Pitting.

Conclusion:
See Pitting

f Corrosion at Welds
Corrosion at welds is not considered a problem in the proposed environment.

Conclusion:
Weld corrosion is not considered a problem for this system.

g Microbiologically Induced Corrosion (MIC)
The proposed operating conditions are suitable for MIC. However, MIC is not normally observed in operating systems except for those exposed to untreated process water.

Conclusion:
MIC is not considered a problem.

h Fatigue/Corrosion Fatigue
Corrosion fatigue is a not expected to be a concern.

Conclusions
Not believed to be a concern.

PLANT ITEM MATERIAL SELECTION DATA SHEET

i Vapor Phase Corrosion
No vapor phase corrosion is expected.

Conclusion:
Not applicable.

j Erosion
Velocities are expected to be low. Erosion allowance of 0.004 inch for components with low solids content (< 2 wt%) at low velocities is based on 24590-WTP-RPT-M-04-0008.

Conclusion:
None expected.

k Galling of Moving Surfaces
Not applicable.

Conclusion:
Not applicable.

l Fretting/Wear
No contacting surfaces expected.

Conclusion:
Not applicable.

m Galvanic Corrosion
No dissimilar metals are present.

Conclusion:
Not a concern.

n Cavitation
None expected.

Conclusion:
Not believed to be of concern.

o Creep
The temperatures are too low to be a concern.

Conclusion:
Not applicable.

p Inadvertent Nitric Acid Addition
Higher chloride contents and higher temperatures usually require higher alloy materials. Nitrate ions inhibit the pitting and crevice corrosion of stainless alloys. Furthermore, nitric acid passivates these alloys; therefore, lower pH values brought about by increases in the nitric acid content of process fluid will not cause higher corrosion rates for these alloys. The upset condition that was most likely to occur is lowering of the pH of the vessel content by inadvertent addition of 0.5 M nitric acid. Lowering of pH may make a chloride-containing solution more likely to cause pitting of stainless alloys. Increasing the nitric acid content of the process fluid adds more of the pitting-inhibiting nitrate ion to the process fluid. In addition, adding the nitric acid solution to the stream will dilute the chloride content of the process fluid.

Conclusion:
The recommended materials will be able to withstand a plausible inadvertent addition of 0.5 M nitric acid.

PLANT ITEM MATERIAL SELECTION DATA SHEET

References:

1. 24590-WTP-RPT-M-04-0008, Rev. 2, *Evaluation Of Stainless Steel Wear Rates In WTP Waste Streams At Low Velocities*
2. 24590-WTP-RPT-PR-04-0001, Rev. B, *WTP Process Corrosion Data*
3. CCN 130173, Dillon, CP (Nickel Development Institute), Personal Communication to J R Divine (ChemMet, Ltd., PC), 3 Feb 2000.
4. Davis, JR (Ed), 1987, *Corrosion, Vol 13*, In "Metals Handbook", ASM International, Metals Park, OH 44073
5. Davis, JR (Ed), 1994, *Stainless Steels*, In ASM Metals Handbook, ASM International, Metals Park, OH 44073
6. Hamner, NE, 1981, *Corrosion Data Survey*, Metals Section, 5th Ed, NACE International, Houston, TX
7. Revie, WW, 2000. *Uhlig's Corrosion Handbook*, 2nd Edition, Wiley-Interscience, New York, NY 10158
8. Sedriks, AJ, 1996, *Corrosion of Stainless Steels*, John Wiley & Sons, Inc., New York, NY 10158
9. Uhlig, HH, 1948, *Corrosion Handbook*, John Wiley & Sons, New York, NY 10158

Bibliography:

1. CCN 130171, Ohl, PC to PG Johnson, Internal Memo, Westinghouse Hanford Co, *Technical Bases for Cl- and pH Limits for Liquid Waste Tank Cars*, MA: PCO:90/01, January 16, 1990
2. CCN 130175, Boschen, Steve, http://www.al6xn.com/images/stainlessguide.pdf
3. CCN 130176, Cole, HS, 1974, *Corrosion of Austenitic Stainless Steel Alloys Due to HNO_3 – HF Mixtures*, ICP-1036, Idaho Chemical Programs – Operations Office, Idaho Falls, ID
4. Agarwal, DC, *Nickel and Nickel Alloys*, In: Revie, WW, 2000. *Uhlig's Corrosion Handbook*, 2nd Edition, Wiley-Interscience, New York, NY 10158
5. Jones, RH (Ed.), 1992, *Stress-Corrosion Cracking*, ASM International, Metals Park, OH 44073
6. Phull, BS, WL Mathay, & RW Ross, 2000, *Corrosion Resistance of Duplex and 4-6% Mo-Containing Stainless Steels in FGD Scrubber Absorber Slurry Environments*, Presented at Corrosion 2000, Orlando, FL, March 26-31, 2000, NACE International, Houston TX 77218.
7. Van Delinder, LS (Ed), 1984, *Corrosion Basics*, NACE International, Houston, TX 77084
8. Wilding, MW and BE Paige, 1976, *Survey on Corrosion of Metals and Alloys in Solutions Containing Nitric Acid*, ICP-1107, Idaho Chemical Programs, Idaho National Engineering Laboratory, Idaho Falls, ID

PLANT ITEM MATERIAL SELECTION DATA SHEET

24590-WTP-RPT-PR-04-0001, Rev. B
WTP Process Corrosion Data

PROCESS CORROSION DATA SHEET

Component(s) (Name/ID #) Eluate contingency vessel (CNP-VSL-00003)
Eluate contingency breakpot (CNP-BRKPT-00001

Facility PTF

In Black Cell? Yes

Chemicals	Unit[1]	Contract Max		Non-Routine 4		Notes
		Leach	No leach	Leach	No Leach	
Aluminum	g/l	1.17E+01	1.10E+01			
Chloride	g/l	4.51E+00	5.02E+00			
Fluoride	g/l	5.36E+00	5.98E+00			
Iron	g/l	8.60E-01	8.97E-01			
Nitrate	g/l	4.93E+02	4.94E+02			
Nitrite	g/l	2.49E+01	2.77E+01			
Phosphate	g/l	1.80E+01	1.96E+01			
Sulfate	g/l	9.58E+00	1.06E+01			
Mercury	g/l	1.47E-02	6.71E-03			
Carbonate	g/l	3.36E+01	3.43E+01			
Undissolved solids	wt%					
Other (NaMnO4, Pb,...)	g/l					
Other	g/l					
pH	N/A					Note 3
Temperature	°F					Note 2
						Note 4

List of Organic Species:

References

System Description: 24590-PTF-3YD-CNP-00001, Rev 0
Mass Balance Document: 24590-WTP-M4C-V11T-00005, Rev A
Normal Input Stream #: CNP12, CNP14, CXP11, CXP12
Off Normal Input Stream # (e.g., overflow from other vessels): N/A
P&ID: N/A
PFD: 24590-PTF-M5-V17T-P0014, Rev 1
Technical Reports: N/A

Notes:

1. Concentrations less than 1x 10^{-4} g/l do not need to be reported; list values to two significant digits max.
2. Steam is used for transfer. The breakpot is normally empty and at ambient temperature most of the time.
   CNP-VSL-00003: T normal operation 77 °F (eluate stream) to 140 °F (24590-PTF-M5C-CNP-00001, Rev 0)
3. Composition can vary and is received on a contingency basis.
   The vessel revelves Cs Eluate at low pH of approx. 0.3 or more, with low levels of Cl, F, etc, also can receive Cs Evap Concentrate that has been neutralized to pH approx. 14 with high levels of Cl, F, etc. Minumum pH based on 0.5M nitric acid
4. Note CXP11 has the same composition as CXP21 but CXP21 does not appear in the mass balance because it is a contingent stream to the vessel.

Assumptions:

This vessel is a contingency vessel and under normal operations contains a heel only. It is available to receive Cs Concentrate and Cs Eluate.

PLANT ITEM MATERIAL SELECTION DATA SHEET

4.1.1 Cs Evaporator Breakpot (CNP-BRKPT-00001)

Routine Operations

This vessel is normally empty and is not used on a routine basis but is available to receive Cs concentrate and Cs eluate, which drains to the eluate contingency storage vessel (CNP-VSL-00003).

Non-Routine Operations that Could Affect Corrosion/Erosion

Recovered acid flows by gravity from the bottom of the Cs evaporator nitric acid rectifier (CNP-DISTC-00001) to the Cs evaporator recovered nitric acid vessel (CNP-VSL-00004). CNP-VSL-00004 has enough eluant to complete one elution of a normal bed of SuperLig 644 resin. If the acid needs reprocessing, as evidenced by an activity above allowable levels, it is recycled through the nitric acid recovery process by way of a steam ejector to the Cs concentrate breakpot, CNP-BRKPT-00001, draining to the eluate contingency storage vessel (CNP-VSL-00003). Then it is sent back to the cesium evaporator breakpot (CNP-BRKPT-00002) at the beginning of the system. If the acid is acceptable (low gamma and correct HNO_3 concentration), it is transferred directly into the eluant stream feeding the IX columns.

PLANT ITEM MATERIAL SELECTION DATA SHEET

R10685022

CNP-VSL-00001, (PTF)
Cs Evaporator Eluate Lute Pot

ISSUED BY
RPP-WTP PDC

- Design Temperature (°F) (max/min): 237/40
- Design Pressure (psig) (internal/external): 40/Atm
- Location: incell

Contents of this document are Dangerous Waste Permit affecting

Operating conditions are as stated on attached Process Corrosion Data Sheet

Operating Modes Considered:

- The vessel is the stated pH at the normal operating temperature.
- The condition of high temperature due to self-boiling of Cs concentrate is assumed to be infrequent and of short duration.

Materials Considered:

Material (UNS No.)	Relative Cost	Acceptable Material	Unacceptable Material
Carbon Steel	0.23		X
304L (S30403)	1.00	X	
316L (S31603)	1.18	X	
6% Mo (N08367/N08926)	7.64	X	
Alloy 22 (N06022)	11.4	X	
Ti-2 (R50400)	10.1		X

Recommended Material: 304 (max 0.030% C; dual certified)

Recommended Corrosion Allowance: 0.040 inch (includes 0.024 inch corrosion allowance and 0.004 inch erosion allowance)

Process & Operations Limitations:

- Develop procedure for periodic flushing with water.

STEVEN WAKEMAN VAIL
STATE OF WASHINGTON
39250
REGISTERED PROFESSIONAL ENGINEER
6/14/06
EXPIRES: 12/07/07
6/15/06

Please note that source, special nuclear and byproduct materials, as defined in the Atomic Energy Act of 1954 (AEA), are regulated at the U.S. Department of Energy (DOE) facilities exclusively by DOE acting pursuant to its AEA authority. DOE asserts, that pursuant to the AEA, it has sole and exclusive responsibility and authority to regulate source, special nuclear, and byproduct materials at DOE-owned nuclear facilities. Information contained herein on radionuclides is provided for process description purposes only.

This bound document contains a total of 6 sheets.

REV	DATE	REASON FOR REVISION	PREPARER	CHECKER	APPROVER
1	6/14/06	Issued for Permitting Use			
0	6/22/04	Issued for Permitting Use	DLA	JRD	APR

PLANT ITEM MATERIAL SELECTION DATA SHEET

Corrosion Considerations:

This lute pot receives eluate from the IX columns.

a General Corrosion
In the proposed pH operating range, little specific information was found for the general/uniform corrosion of stainless steels or other material in the given waste. This lack of data is not critical because the alloys needed for the system typically fail by pitting, crevice corrosion, or cracking. On this basis, a corrosion allowance has little meaning though a nominal value is given.

Davis (1994) states the corrosion rate for 304L and 316L will be less than about 0.1 mpy at these temperatures.

Conclusion:
304L and 316L are both expected to be sufficiently resistant to the waste solution with a probable general corrosion rate of less than 1 mpy.

b Pitting Corrosion
With the stated conditions, 304L would be marginal but 316L is recommended. With thorough flushing with water, 304L is acceptable.

Conclusion:
The data from the flowsheets suggest there are sufficient halides to cause pitting in 304L unless thoroughly flushed.

c End Grain Corrosion
Not believed to be applicable to this system.

Conclusion:
Not applicable to this system.

d Stress Corrosion Cracking
The exact amount of chloride required to stress corrosion crack stainless steel is unknown. In part this is because the amount varies with temperature, metal sensitization, and the environment. But it is also unknown because chloride tends to concentrate under heat transfer conditions, by evaporation, and electrochemically during a corrosion process. Hence, even as little as a few ppm can lead to cracking under some conditions. Generally, as seen in Sedriks (1996) and Davis (1987), stress corrosion cracking does not usually occur below about 140°F. Further, the use of "L" grade stainless reduces the opportunity for sensitization.

Conclusion:
The use of 316L is recommended for the stated conditions. Though with flushing, 304L is acceptable.

e Crevice Corrosion
See Pitting.

Conclusion:
See Pitting

f Corrosion at Welds
Corrosion at welds is not a problem in the proposed environment.

Conclusion:
Weld corrosion is a not expected to be a concern.

g Microbiologically Induced Corrosion (MIC)
The proposed operating conditions are generally acceptable for MIC. However, MIC is not normally observed in operating systems

Conclusion:
MIC is not considered a problem.

h Fatigue/Corrosion Fatigue
Corrosion fatigue is not expected to be a concern

Conclusions
Not a concern.

i Vapor Phase Corrosion
Not expected to be a concern.

Conclusion:
Vapor phase corrosion is not expected.

PLANT ITEM MATERIAL SELECTION DATA SHEET

j Erosion
There are no solids and the velocities are expected to be low. Erosion allowance of 0.004 inch for components with low solids content (< 2 wt%) at low velocities is based on 24590-WTP-RPT-M-04-0008.

Conclusion:
Not a concern.

k Galling of Moving Surfaces
Not applicable.

Conclusion:
Not applicable.

l Fretting/Wear
No contacting surfaces expected.

Conclusion:
Not applicable.

m Galvanic Corrosion
No dissimilar metals are present.

Conclusion:
Not applicable.

n Cavitation
None expected.

Conclusion:
Not believed to be of concern.

o Creep
The temperatures are too low to be a concern.

Conclusion:
Not applicable.

p Inadvertent Nitric Acid Addition
Vessel routinely operates at low pH.

Conclusion:
Not applicable.

PLANT ITEM MATERIAL SELECTION DATA SHEET

References:

1. 24590-WTP-RPT-M-04-0008, Rev. 2, *Evaluation Of Stainless Steel Wear Rates In WTP Waste Streams At Low Velocities*
2. 24590-WTP-RPT-PR-04-0001, Rev. B, *WTP Process Corrosion Data*
3. Davis, JR (Ed), 1987, *Corrosion, Vol 13*, In "Metals Handbook", ASM International, Metals Park, OH 44073
4. Davis, JR (Ed), 1994, *Stainless Steels*, In ASM Metals Handbook, ASM International, Metals Park, OH 44073
5. Sedriks, AJ, 1996, *Corrosion of Stainless Steels*, John Wiley & Sons, Inc., New York, NY 10158

Bibliography:

1. Cole, HS, 1974, *Corrosion of Austenitic Stainless Steel Alloys Due to HNO_3 – HF Mixtures*, ICP-1036, Idaho Chemical Programs – Operations Office, Idaho Falls, ID
2. Hamner, NE, 1981, *Corrosion Data Survey*, Metals Section, 5th Ed, NACE International, Houston, TX
3. Jones, RH (Ed.), 1992, *Stress-Corrosion Cracking*, ASM International, Metals Park, OH 44073
4. Ohl, PC to PG Johnson, Internal Memo, Westinghouse Hanford Co, *Technical Bases for Cl- and pH Limits for Liquid Waste Tank Cars*, MA: PCO:90/01, January 16, 1990.
5. Uhlig, HH, 1948, *Corrosion Handbook*, John Wiley & Sons, New York, NY 10158
6. Van Delinder, LS (Ed), 1984, *Corrosion Basics*, NACE International, Houston, TX 77084
7. Wilding, MW and BE Paige, 1976, *Survey on Corrosion of Metals and Alloys in Solutions Containing Nitric Acid*, ICP-1107, Idaho Chemical Programs, Idaho National Engineering Laboratory, Idaho Falls, ID,

PLANT ITEM MATERIAL SELECTION DATA SHEET

24590-WTP-RPT-PR-04-0001, Rev. B
WTP Process Corrosion Data

PROCESS CORROSION DATA SHEET

Component(s) (Name/ID #) Cs concentrate breakpot (CNP-BRKPT-00002)
Cs evaporator eluate lute pot (CNP-VSL-00001)

Facility PTF

In Black Cell? Yes

Chemicals	Unit[1]	Contract Max		Non-Routine [3]		Notes
		Leach	No leach	Leach	No Leach	
Aluminum	g/l	2.30E-01	2.31E-01			
Chloride	g/l	8.85E-02	1.06E-01			
Fluoride	g/l	1.05E-01	1.26E-01			
Iron	g/l	1.69E-02	1.89E-02			
Nitrate	g/l	1.54E+01	8.61E+00	4.46E-04	4.46E-04	
Nitrite	g/l	4.88E-01	5.83E-01			
Phosphate	g/l	3.53E-01	4.13E-01			
Sulfate	g/l	1.88E-01	2.24E-01			
Mercury	g/l	5.47E-04	1.42E-04			
Carbonate	g/l	6.59E-01	7.24E-01			
Undissolved solids	wt%					
Other (NaMnO4, Pb,...)	g/l					
Other	g/l					
pH	N/A					Assumption 1
Temperature	°F					Note 2

List of Organic Species:

References

System Description: 24590-PTF-3YD-CNP-00001, Rev 0
Mass Balance Document: 24590-WTP-M4C-V11T-00005, Rev A
Normal Input Stream #: CXP11, CXP12, CNP02
Off Normal Input Stream # (e.g., overflow from other vessels): CNP01 acid charge
P&ID: N/A
PFD: 24590-PTF-M5-V17T-P0014, Rev 1
Technical Reports: N/A

Notes:

1. Concentrations less than 1x 10^{-4} g/l do not need to be reported; list values to two significant digits max.
2. Breakpot: Steam is used for transfer. The breakpot is normally empty and at ambient temperature most of the time.
   Vessel: Tnormal operating range 77 °F (eluate) to 140 °F (24590-PTF-M5C-CNP-00001, Rev 0)
3. Nitric acid charge (CNP01)

Assumptions:

1. Stream CXP12 post elution rinse pH approx 0.5, CXP11 elution stream pH approx. 0.3 or more.

PLANT ITEM MATERIAL SELECTION DATA SHEET

24590-WTP-RPT-PR-04-0001, Rev. B
WTP Process Corrosion Data

4.1.2 Cs Concentrate Breakpot (CNP-BRKPT-00002), Cs Evaporator Eluate Lute Pot (CNP-VSL-00001)

Routine Operations

Under normal operations, the eluant from the IX columns goes directly to the Cs concentrate breakpot, CNP-BRKPT-00002. Eluate is then gravity-fed through a lute pot, CNP-VSL-00001, into the separator vessel, CNP-EVAP-00001. CNP-BRKPT-00002 is vented to the vessel vent system and contains wash rings and purge air.

Non-Routine Operations that Could Affect Corrosion/Erosion

None identified.

PLANT ITEM MATERIAL SELECTION DATA SHEET

R10682508

ISSUED BY
RPP-WTP PDC

CNP-HX-00004 (PTF)
Cs Evaporator After-Condenser

- Design Temperature (°F)(max/min): Shell side: 378/40: Tube side: 125/40
- Design Pressure (psig) (max/min): Shell side: 100/FV; Tube side: 100/FV
- Location: outcell

Design temperature and pressure information is considered bounding and to be confirmed by Vendor.

Contents of this document are Dangerous Waste Permit affecting

Operating conditions are as stated on attached Process Corrosion Data Sheet

Operating Modes Considered:

- Normal operation

Materials Considered:

Material (UNS No.)	Relative Cost	Acceptable Material	Unacceptable Material
Carbon Steel	0.23		X
304L (S30403)	1.00	X	
316L (S31603)	1.18	X	
6% Mo (N08367/N08926)	7.64	X	
Alloy 22 (N06022)	11.4	X	
Ti-2 (R50400)	10.1		X

Recommended Material: 304 (max 0.030% C; dual certified)

Recommended Corrosion Allowance: Shell side and tube side: 0.040 inch (includes 0.024 inch corrosion allowance and 0.004 inch erosion allowance)

Process & Operations Limitations:

- None

STEVEN WAKEMAN VAIL
STATE OF WASHINGTON
39250
REGISTERED
PROFESSIONAL ENGINEER
5/24/06
EXPIRES: 12/07/07

Please note that source, special nuclear and byproduct materials, as defined in the Atomic Energy Act of 1954 (AEA), are regulated at the U.S. Department of Energy (DOE) facilities exclusively by DOE acting pursuant to its AEA authority. DOE asserts, that pursuant to the AEA, it has sole and exclusive responsibility and authority to regulate source, special nuclear, and byproduct materials at DOE-owned nuclear facilities. Information contained herein on radionuclides is provided for process description purposes only.

This bound document contains a total of 6 sheets.

REV	DATE	REASON FOR REVISION	PREPARER	CHECKER	APPROVER
1	5/24/06	Issued for Permitting Use			
0	9/8/04	Issued for Permitting Use	DLA	JRD	APR

PLANT ITEM MATERIAL SELECTION DATA SHEET

Corrosion Considerations:

Exhaust vapors from the Cs evaporator separator vessel are condensed in CNP-HX-00004 prior to venting to the ventilation system scrubbing equipment. The condensate from the condensers has a minimal amount of HNO_3 making it slightly acidic.

a General Corrosion
In normal operation, the vessel will contain either treated process water (slightly acidic) or DIW. Based on Uhlig (1948), little uniform corrosion is expected at these conditions. The uniform corrosion rate of the 300 series stainless steels in DIW at temperatures up to about boiling are generally considered small, <1 mpy. Hamner (1981) lists a corrosion rate for 304 (and 304L) in pure water of less than 2 mpy (his smallest unit of measurement).

Conclusion:
304L or 316L are acceptable for this system with a probable general corrosion rate of less than 1 mpy.

b Pitting Corrosion
With the proposed temperatures, 304L is acceptable under the stated no-chloride conditions.

Conclusion:
The data from the flowsheets suggest there are no halides to cause pitting; 304L is recommended.

c End Grain Corrosion
Not believed to be applicable to this system.

Conclusion:
Not applicable to this system.

d Stress Corrosion Cracking
The exact amount of chloride required to stress corrosion crack stainless steel is unknown. In part this is because the amount varies with temperature, metal sensitization, and the environment. But it is also unknown because chloride tends to concentrate under heat transfer conditions, by evaporation, and electrochemically during a corrosion process. Hence, even as little as a few ppm can lead to cracking under some conditions. Generally, as seen in Sedriks (1996) and Davis (1987), stress corrosion cracking does not usually occur below about 140°F. Further, the use of "L" grade stainless reduces the opportunity for sensitization.

Conclusion:
The use of 304L is expected to be acceptable for the stated no-chloride conditions.

e Crevice Corrosion
See Pitting.

Conclusion:
See Pitting.

f Corrosion at Welds
Corrosion at welds is not a problem in the proposed environment.

Conclusion:
Weld corrosion is not considered a problem for this system.

g Microbiologically Induced Corrosion (MIC)
The proposed operating conditions are suitable for MIC if infected. However, infection is considered unlikely.

Conclusion:
MIC is not considered a problem.

PLANT ITEM MATERIAL SELECTION DATA SHEET

h Fatigue/Corrosion Fatigue
Corrosion fatigue is a not expected to be a concern.

Conclusions
Not applicable.

i Vapor Phase Corrosion
Not applicable to this system.

Conclusion:
Vapor phase corrosion is not expected.

j Erosion
Velocities within the condenser are expected to be low. Erosion allowance of 0.004 inch for components with low solids content (< 2 wt%) at low velocities is based on 24590-WTP-RPT-M-04-0008.

Conclusion:
Not expected to be a concern.

k Galling of Moving Surfaces
Not applicable.

Conclusion:
Not applicable.

l Fretting/Wear
No contacting surfaces expected.

Conclusion:
Not applicable.

m Galvanic Corrosion
No dissimilar metals are present.

Conclusion:
Not applicable.

n Cavitation
None expected.

Conclusion:
Not believed to be of concern.

o Creep
The temperatures are too low to be a concern.

Conclusion:
Not applicable.

p Inadvertent Nitric Acid Addition
The contents of the condenser are essentially water with no reportable halides. The lowering of the pH by the inadvertent addition of nitric acid would be of no concern.

Conclusion:
The recommended materials will be able to withstand a plausible inadvertent addition of nitric acid.

PLANT ITEM MATERIAL SELECTION DATA SHEET

References:

1. 24590-WTP-RPT-M-04-0008, Rev. 2, *Evaluation of Stainless Steel Wear Rates in WTP Waste Streams at Low Velocities,*
2. 24590-WTP-RPT-PR-04-0001, Rev. B, *WTP Process Corrosion Data*
3. Davis, JR (Ed), 1987, *Corrosion, Vol 13*, In "Metals Handbook", ASM International, Metals Park, OH 44073
4. Hamner, NE, 1981, *Corrosion Data Survey*, Metals Section, 5th Ed, NACE International, Houston, TX
5. Sedriks, AJ, 1996, *Corrosion of Stainless Steels*, John Wiley & Sons, Inc., New York, NY 10158
6. Uhlig, HH, 1948, *Corrosion Handbook*, John Wiley & Sons, New York, NY 10158

Bibliography:

1. CCN 130170, Blackburn, LD to PG Johnson, Internal Memo, Westinghouse Hanford Co, *Evaluation of 240-AR Chloride Limit*, August 15, 1991.
2. CCN 130171, Ohl, PC to PG Johnson, Internal Memo, Westinghouse Hanford Co, *Technical Bases for Cl- and pH Limits for Liquid Waste Tank Cars*, MA: PCO:90/01, January 16, 1990.
3. Davis, JR (Ed), 1994, *Stainless Steels*, In ASM Metals Handbook, ASM International, Metals Park, OH 44073
4. Jones, RH (Ed.), 1992, *Stress-Corrosion Cracking*, ASM International, Metals Park, OH 44073
5. Van Delinder, LS (Ed), 1984, *Corrosion Basics*, NACE International, Houston, TX 77084

PLANT ITEM MATERIAL SELECTION DATA SHEET

24590-WTP-RPT-PR-04-0001, Rev. B
WTP Process Corrosion Data

PROCESS CORROSION DATA SHEET

Component(s) (Name/ID #) Cs evaporator primary, inter- and after- condenser (CNP-HX-00002,3,4)

Facility PTF

In Black Cell? No

Chemicals	Unit[1]	Contract Max		Non-Routine		Notes
		Leach	No leach	Leach	No Leach	
Aluminum	g/m^3					
Chloride	g/m^3					
Fluoride	g/m^3					
Iron	g/m^3					
Nitrate	g/m^3					
Nitrite	g/m^3					
Phosphate	g/m^3					
Sulfate	g/m^3					
Mercury	g/m^3					
Carbonate	g/m^3					
Undissolved solids	wt%					
Other (NaMnO4, Pb,...)	g/m^3					
Other	g/m^3					
pH	N/A					Assumption 1
Temperature	°F					Assumption 2

List of Organic Species:

References

System Description: 24590-PTF-3YD-CNP-00001, Rev 0
Mass Balance Document: Chemical Max Calculation 24590-WTP-M4C-V11T-00005, Rev A
Normal Input Stream #: CNP04
Off Normal Input Stream # (e.g., overflow from other vessels): N/A
P&ID: N/A
PFD: 24590-PTF-M5-V17T-P0014, Rev 1
Technical Reports: N/A

Notes:

1 Concentrations less than $1x\ 10^{-4}\ g/m^3$ do not need to be reported; list values to two significant digits max.

Assumptions:

1. The overheads from the distilation column are expected to be contain primanly water with pH near or at 7.0.
2 Assume same as T normal operation for the evaporator, 122 °F to 212 °F (pressure of operation for last condenser is atmospheric)

PLANT ITEM MATERIAL SELECTION DATA SHEET

4.1.5 Cs Evaporator Primary Condenser (CNP-HX-00002), Cs Evaporator Inter-Condenser (CNP-HX-00003), and Cs Evaporator After-Condenser (CNP-HX-00004)

Routine Operations

The Cs evaporator primary condenser, CNP-HX-00002, is a water-cooled, U-tube unit with condensation taking place on the shell side. The condenser shell incorporates a condensate sump, which contains a weir arrangement to control the flow split between the reflux and the overhead product flows. The overhead product flow includes excess water from the pre-elution and post-elution rinses sent to the Cs evaporator separator vessel from the cesium ion exchange columns.

To reduce the boiling temperature of the liquids in the Cs evaporator separator vessel, the system is run under vacuum. This is achieved using a two-stage steam ejector system. Exhaust vapors from the ejectors are condensed in Cs evaporator inter-condenser, CNP-HX-00003, and after-condenser, CNP-HX-00004, prior to venting to the ventilation system scrubbing equipment. Process condensate from the Cs evaporator primary condenser and Cs evaporator secondary condenser drains to the acidic/alkaline effluent vessels, PWD-VSL-00015 and PWD-VSL-00016, located in the PWD system.

The condensate from the condensers has a minimal amount of HNO_3, making it slightly acidic but not acidic enough to warrant neutralization; thus, it will be considered and referred to as process condensate.

Non-Routine Operations that Could Affect Corrosion/Erosion

None identified.

PLANT ITEM MATERIAL SELECTION DATA SHEET

CXP-VSL-00001 (PTF)
Cs Ion Exchange Feed Vessel

ISSUED BY
RPP-WTP PDC

R10667872

- Design Temperature (°F)(max/min): 138/40
- Design Pressure (psig) (internal/external): 15/10
- Location: incell

Contents of this document are Dangerous Waste Permit affecting

Operating conditions are as stated on attached Process Corrosion Data Sheet

Maintenance will not be performed on this vessel for the forty years design life

Operating Modes Considered:

- The vessel is filled with LAW.
- The vessel is filled with demineralized water.

Materials Considered:

Material (UNS No.)	Relative Cost	Acceptable Material	Unacceptable Material
Carbon Steel	0.23		X
304L (S30403)	1.00		X
316L (S31603)	1.18	X	
6% Mo (N08367/N08926)	7.64	X	
Alloy 22 (N06022)	11.4	X	
Ti-2 (R50400)	10.1		X

Recommended Material: 316 (max 0.030% C; dual certified)

Recommended Corrosion Allowance: 0.040 inch (includes 0.024 inch corrosion allowance and 0.004 inch erosion allowance)

Process & Operations Limitations:

- Develop rinsing/flushing procedure for acid and water.

STEVEN WAKEMAN VAIL
STATE OF WASHINGTON
39250
REGISTERED PROFESSIONAL ENGINEER
EXPIRES: 12/07/07

3/8/06

Please note that source, special nuclear and byproduct materials, as defined in the Atomic Energy Act of 1954 (AEA), are regulated at the U.S. Department of Energy (DOE) facilities exclusively by DOE acting pursuant to its AEA authority. DOE asserts, that pursuant to the AEA, it has sole and exclusive responsibility and authority to regulate source, special nuclear, and byproduct materials at DOE-owned nuclear facilities. Information contained herein on radionuclides is provided for process description purposes only.

This bound document contains a total of 6 sheets.

REV	DATE	REASON FOR REVISION	PREPARER	CHECKER	APPROVER
1	3/8/06	Issued for Permitting Use			
0	5/18/04	Issued for Permitting Use	DLA	JRD	APR

PLANT ITEM MATERIAL SELECTION DATA SHEET

Corrosion Considerations:

This vessel normally receives filtered LAW from one of the ultrafilter permeate vessels (UFP-VSL-000062A/B/C), as well as batches of pre-elution displaced LAW from the ion exchange column, and provides feed buffer capacity to allow continuous operation of the IX system.

a General Corrosion
Hamner (1981) lists a corrosion rate for 304 (and 304L) in NaOH of less than 20 mpy (500 μm/y) at 77°F and over 20 mpy at 122°F. He shows 316 (and 316L) has a rate of less than 2 mpy up to 122°F and 50% NaOH. Dillon (2000) and Sedriks (1996) both state that the 300 series alloys are acceptable in up to 50% NaOH at temperatures up to about 122°F or slightly above. Davis (1994) states the corrosion rate for 304L in pure NaOH will be less than about 0.1 mpy up to about 212°F though Sedriks states the data beyond about 122°F are incorrect.

In this system, the normal hydroxide concentrations and temperatures are such that either 304L or 316L stainless steel will be acceptable.

Conclusion:
At temperatures less than about 140°F, 304L and 316L are expected to be sufficiently resistant to the waste solution with a probable general corrosion rate of less than 1 mpy.

b Pitting Corrosion
Chloride is known to cause pitting in acid and neutral solutions. Dillon (2000) is of the opinion that in alkaline solutions, pH>12, chlorides are likely to promote pitting only in tight crevices. Dillon and Koch (1995) are both of the opinion that fluoride will have little effect in an alkaline media. If the chloride concentrations are low at the low pH and high at the high pH, then even the low pH conditions are expected to be benign towards 304L.

Normally the vessel is to operate between 77 and 113 °F. At the normal temperature, based on the work of Zapp (1998) and others, 304L stainless steel would be acceptable in the proposed alkaline conditions.

If the vessel were rinsed with acid or filled with process water and left stagnant, there would be a tendency to pit. The time to initiate would depend on the amount of residual chlorides. The more pitting-resistant 316L is recommended.

Conclusion:
Localized corrosion, such as pitting, is not a concern. It is expected that 316L will be a better choice than 304L.

c End Grain Corrosion
End grain corrosion only occurs in metal with exposed end grains and in highly oxidizing acid conditions.

Conclusion:
Not likely in this system.

d Stress Corrosion Cracking
The exact amount of chloride required to cause stress corrosion cracking is unknown. In part this is because the amount varies with temperature, metal sensitization, and the environment. But it is also unknown because chloride tends to concentrate under heat transfer conditions, by evaporation, and electrochemically during a corrosion process. Hence, even as little as a few ppm can lead to cracking under some conditions. Generally, as seen in Sedriks (1996) and Davis (1987), chloride stress corrosion cracking does not usually occur below about 140°F. During the normal operations, either 304L or 316L are expected to be satisfactory.

Neither 304L nor 316L are susceptible to caustic cracking at the proposed conditions.

Conclusion:
At the normal operating environment, either 304L or 316L is recommended.

e Crevice Corrosion
See Pitting.

Conclusion:
See Pitting

f Corrosion at Welds
Corrosion at welds is not considered a problem in the proposed environment.

Conclusion:
Weld corrosion is not considered a problem for this system.

PLANT ITEM MATERIAL SELECTION DATA SHEET

g Microbiologically Induced Corrosion (MIC)
The proposed operating conditions are not conducive to microbial growth if microbes were introduced.

Conclusion:
MIC is not considered a problem.

h Fatigue/Corrosion Fatigue
Not expected to be a concern.

Conclusions
Not a concern.

i Vapor Phase Corrosion
The vapor phase portion of the vessel is expected to be contacted with particles of waste from splashing. It is unknown whether this will be sufficiently washed or whether residual acids or solids will be present. Due to the possibility that deposits may remain, 316L is the minimum recommended.

Conclusion:
Not expected to be a concern with 316L.

j Erosion
Erosion of vessel should be minimal with the very low undissolved solids content anticipated. Erosion allowance of 0.004 inch for components with low solids content (< 2 wt%) at low velocities is based on 24590-WTP-RPT-M-04-0008.

Conclusion:
Not expeoted to be a concern.

k Galling of Moving Surfaces
There are no moving surfaces within the vessel.

Conclusion:
Not applicable.

l Fretting/Wear
No contacting surfaces expected.

Conclusion:
Not applicable.

m Galvanic Corrosion
No dissimilar metals are present.

Conclusion:
Not applicable.

n Cavitation
None expected.

Conclusion:
Not believed to be of concern.

o Creep
The temperatures are too low to be a concern.

Conclusion:
Not applicable.

p Inadvertent Nitric Acid Addition
Higher chloride contents and higher temperatures usually require higher alloy materials. Nitrate ions inhibit the pitting and crevice corrosion of stainless alloys. Furthermore, nitric acid passivates these alloys; therefore, lower pH values brought about by increases in the nitric acid content of process fluid will not cause higher corrosion rates for these alloys. The upset condition that was most likely to occur is lowering of the pH of the vessel content by inadvertent addition of 0.5 M nitric acid. Lowering of pH may make a chloride-containing solution more likely to cause pitting of stainless alloys. Increasing the nitric acid content of the process fluid adds more of the pitting-inhibiting nitrate ion to the process fluid. In addition, adding the nitric acid solution to the stream will dilute the chloride content of the process fluid.

Conclusion:
The recommended materials will be able to withstand a plausible inadvertent addition of 0.5 M nitric acid for a limited period.

PLANT ITEM MATERIAL SELECTION DATA SHEET

References:

1. 24590-WTP-RPT-M-04-0008, Rev. 2, *Evaluation Of Stainless Steel Wear Rates In WTP Waste Streams At Low Velocities*
2. 24590-WTP-RPT-PR-04-0001, Rev. B, *WTP Process Corrosion Data*
3. CCN 130173, Dillon, CP (Nickel Development Institute), Personal Communication to J R Divine (ChemMet, Ltd., PC), 3 Feb 2000.
4. Davis, JR (Ed), 1987, *Corrosion, Vol 13*, In "Metals Handbook", ASM International, Metals Park, OH 44073.
5. Davis, JR (Ed), 1994, *Stainless Steels*, In ASM Metals Handbook, ASM International, Metals Park, OH 44073.
6. Hamner, NE, 1981, *Corrosion Data Survey*, Metals Section, 5th Ed, NACE International, Houston, TX 77218.
7. Koch, GH, 1995, *Localized Corrosion in Halides Other Than Chlorides*, MTI Pub No. 41, Materials Technology Institute of the Chemical Process Industries, Inc, St Louis, MO 63141.
8. Sedriks, AJ, 1996, *Corrosion of Stainless Steels*, John Wiley & Sons, Inc., New York, NY 10158.
9. Zapp, PE, 1998, *Preliminary Assessment of Evaporator Materials of Construction*, BNF—003-98-0029, Rev 0, Westinghouse Savannah River Co., Inc for BNFL Inc.

Bibliography:

1. CCN 130171, Ohl, PC to PG Johnson, Internal Memo, Westinghouse Hanford Co, *Technical Bases for Cl- and pH Limits for Liquid Waste Tank Cars*, MA: PCO:90/01, January 16, 1990.
2. Jones, RH (Ed.), 1992, *Stress-Corrosion Cracking*, ASM International, Metals Park, OH 44073.
3. Uhlig, HH, 1948, *Corrosion Handbook*, John Wiley & Sons, New York, NY 10158.
4. Van Delinder, LS (Ed), 1984, *Corrosion Basics*, NACE International, Houston, TX 77084.

PLANT ITEM MATERIAL SELECTION DATA SHEET

24590-WTP-RPT-PR-04-0001, Rev. B
WTP Process Corrosion Data

PROCESS CORROSION DATA

Component(s) (Name/ID #) Cs ion exchange feed vessel (CXP-VSL-00001)

Facility PTF

In Black Cell? Yes

Chemicals	Unit[1]	Contract Max		Non-Routine		Notes
		Leach	No leach	Leach	No Leach	
Aluminum	g/l	3.15E+01	3.17E+01			
Chloride	g/l	1.21E+01	1.45E+01			
Fluoride	g/l	1.44E+01	1.73E+01			
Iron	g/l	2.31E+00	2.60E+00			
Nitrate	g/l	2.23E+02	2.59E+02			
Nitrite	g/l	6.69E+01	8.01E+01			
Phosphate	g/l	4.83E+01	5.66E+01			
Sulfate	g/l	2.57E+01	3.08E+01			
Mercury	g/l	7.47E-02	1.94E-02			
Carbonate	g/l	9.03E+01	9.93E+01			
Undissolved solids	wt%					
Other (NaMnO4, Pb,...)	g/l					
Other	g/l					
pH	N/A					Note3
Temperature	°F					Note 2

List of Organic Species:

References

System Description: 24590-PTF-3YD-CXP-00001, Rev 0
Mass Balance Document: 24590-WTP-M4C-V11T-00005, Rev A
Normal Input Stream #: CXP09, UFP33, CXP01
Off Normal Input Stream #: off spec treated LAW high in Cs
P&ID: N/A
PFD: 24590-PTF-M5-V17T-P0012, Rev 0
Technical Reports: N/A

Notes:

1. Concentrations less than 1x 10^{-4} g/l do not need to be reported; list values to two significant digits max.
2. T operation 77 °F to 113 °F (24590-PTF-MVC-CXP-00001, Rev 0)
3. pH approximately 12 (based on $Al(OH)_3$ precipitation) to 14, CXP09, UFP33 are highly basic, contain 0.25M NaOH.

Assumptions:

4.3.3 Cs Ion Exchange Feed Vessel (CXP-VSL-00001)

Routine Operations

The Cs ion exchange feed vessel (CXP-VSL-00001) is designed to receive LAW from the ultrafiltration process system (UFP) and provide feed buffer capacity to allow continuous operation of the IX system. The vessel normally receives filtered LAW from one of the three ultrafilter permeate vessels (UFP-VSL-00062-A, -B, or -C), as well as batches of pre-elution displaced LAW from the ion exchange columns. It can receive (intermittently) LAW that bypasses the ultrafilters (from UFP-VSL-00001-A or -B) and off-specification recycle from the Cs treated LAW collection vessel. The total batch volume of the Cs-IX feed vessel is 80,000 gallons.

Non-Routine Operations that Could Affect Corrosion/Erosion

This vessel is also used as a point of recycle for the IX system if the Cs treated LAW is found to be out of specification for ^{137}Cs content. This vessel overflows to PWD-VSL-00033. For corrosion evaluation, the recycle stream is bounded by the feed stream.

PLANT ITEM MATERIAL SELECTION DATA SHEET

R10559885

CXP-VSL-00026 A/B/C (PTF)
IX Treated LAW Collection Vessel

- Design Temperature (°F)(max/min): 138/40
- Design Pressure (psig) (max/min): 15/FV
- Location: incell
- PJM Discharge Velocity (fps) (max): 40
- Drive Cycle: 17 % (at 40 fps)

Associated items

CXP-PJM-00002 – CXP-PJM-00019

ISSUED BY
RPP-WTP PDC

Contents of this document are Dangerous Waste Permit affecting

Operating conditions are as stated on sheets 5 and 6

Operating Modes Considered:

- The vessel is filled with alkaline waste.
- The vessel is filled with demineralized water with traces of contract maximum waste.

Materials Considered:

Material (UNS No.)	Relative Cost	Acceptable Material	Unacceptable Material
Carbon Steel	0.23		X
304L (S30403)	1.00		X
316L (S31603)	1.18	X	
6% Mo (N08367/N08926)	7.64	X	
Alloy 22 (N06022)	11.4	X	
Ti-2 (R50400)	10.1		X

Recommended Material: 316 (max 0.030% C; dual certified)

Recommended Corrosion Allowance: 0.04 inch (includes 0.024 inch corrosion allowance and 0.004 inch erosion allowance)

Process & Operations Limitations:

- Develop rinsing/flushing procedure for acid and water

STEVEN WAKEMAN VAIL
STATE OF WASHINGTON
39250
REGISTERED PROFESSIONAL ENGINEER
3/29/05
EXPIRES: 12/07/05

Please note that source, special nuclear and byproduct materials, as defined in the Atomic Energy Act of 1954 (AEA), are regulated at the U.S. Department of Energy (DOE) facilities exclusively by DOE acting pursuant to its AEA authority. DOE asserts, that pursuant to the AEA, it has sole and exclusive responsibility and authority to regulate source, special nuclear, and byproduct materials at DOE-owned nuclear facilities. Information contained herein on radionuclides is provided for process description purposes only.

This bound document contains a total of 6 sheets.

REV	DATE	REASON FOR REVISION	PREPARER	CHECKER	APPROVER
1	3/29/05	Issued for Permitting Use			
0	5/20/04	Issued for Permitting Use	DLA	APR	SWV

PLANT ITEM MATERIAL SELECTION DATA SHEET

Corrosion Considerations:

Vessels receive cesium-depleted LAW and hold the treated LAW while analysis is completed and results reviewed to determine if the batch meets cesium concentration specifications and can be sent on or must be recycled..

a General Corrosion
The vessels will operate between 77 and 113°F. The solutions in the vessels will generally be alkaline.

Hamner (1981) lists a corrosion rate for 304 (and 304L) in NaOH of less than 20 mpy (500 μm/y) at 77°F and over 20 mpy at 122°F. He shows 316 (and 316L) has a rate of less than 2 mpy up to 122°F and 50% NaOH. Sedriks (1996) states that the 300 series are acceptable in up to 50% NaOH at temperatures up to about 122°F or slightly above Davis (1994) states the corrosion rate for 304L in pure NaOH will be less than about 0.1 mpy up to about 212°F though Sedriks states the corrosion rate data beyond about 122°F is low because of the presence of oxidizers.

In this system, the normal hydroxide concentrations and temperatures are such that 304L stainless steel will be acceptable.

Conclusion:
At temperatures less than about 140°F, 304L is expected to be sufficiently resistant to the waste solution with a probable general corrosion rate of less than 1 mpy.

b Pitting Corrosion
Chloride is known to cause pitting in acid and neutral solutions. It is thought that in alkaline solutions, pH>12, chlorides are likely to promote pitting only in tight crevices. Koch (1995) is of the opinion that fluoride will have little effect in an alkaline media.

Because the vessels normally operate below 113°F, 304L stainless steel would be acceptable in the proposed alkaline conditions.

If the vessel were filled with process water and left stagnant, there would be a tendency to pit The time to initiate would depend on the amount of residual chlorides. 316L is considered sufficiently resistant.

Conclusion:
Localized corrosion, such as pitting, is not expected to be a concern under the stated operating conditions. Under those conditions, it is expected that 304L will be satisfactory. However, to allow for the possibility of lower pH conditions during elution, 316L is the recommended alloy.

c End Grain Corrosion
End grain corrosion only occurs in metal with exposed end grains and in highly oxidizing acid conditions.

Conclusion:
Not expected in this system.

d Stress Corrosion Cracking
The exact amount of chloride required to cause stress corrosion cracking is unknown. In part this is because the amount varies with temperature, metal sensitization, and the environment. But it is also unknown because chloride tends to concentrate under heat transfer conditions, by evaporation, and electrochemically during a corrosion process. Hence, even as little as a few ppm can lead to cracking under some conditions. Generally, as seen in Sedriks (1996) and Davis (1987), stress corrosion cracking does not usually occur below the normal maximum operating temperature. During the normal operation, either 304L or 316L are expected to be satisfactory.

Neither 304L nor 316L are susceptible to caustic cracking at the proposed conditions.

Conclusion:
At the normal, stated, operating environment, either 304L or 316L is acceptable.

e Crevice Corrosion
See pitting.

Conclusion:
See Pitting.

f Corrosion at Welds
Corrosion at welds is not considered a problem in the proposed environment.

Conclusion:
Weld corrosion is not considered a problem for this system.

g Microbiologically Induced Corrosion (MIC)
The proposed operating conditions are not conducive to microbial growth if microbes were introduced.

Conclusion:
MIC is not considered a problem.

PLANT ITEM MATERIAL SELECTION DATA SHEET

h Fatigue/Corrosion Fatigue
Not expected to be a concern.

Conclusion:
Not expected to be a concern.

i Vapor Phase Corrosion
The vapor phase portion of the vessel may be contacted with particles of waste. It is unknown whether this will be sufficiently washed or whether residual acids or solids will be present. In the event solids remain, and at the stated chloride concentrations, 316L is the minimum suitable.

Conclusions:
316L is recommended

j Erosion
Based on past experiments by Smith & Elmore (1992), the solids are soft and erosion is not expected to be a concern for the vessel wall. A general erosion allowance of 0.004 inch is adequate for components with solids content less than 2 wt%. No localized protection is necessary for the applicable portions of the bottom head to accommodate PJM discharge velocities of up to 12 m/s for a usage of 100 % operation.

The PJM nozzle requires no additional protection

Conclusion:
The recommended corrosion allowance provides sufficient protection for erosion of the vessel.

k Galling of Moving Surfaces
Not applicable

Conclusion:
Not applicable.

l Fretting/Wear
No contacting surfaces expected.

Conclusion:
Not applicable.

m Galvanic Corrosion
No dissimilar metals are present.

Conclusion:
Not applicable.

n Cavitation
None expected.

Conclusion:
Not believed to be of concern.

o Creep
The temperatures are too low to be a concern.

Conclusion:
Not applicable.

p Inadvertent Nitric Acid Addition
Higher chloride contents and higher temperatures usually require higher alloy materials. Nitrate ions inhibit the pitting and crevice corrosion of stainless alloys. Furthermore, nitric acid passivates these alloys; therefore, lower pH values brought about by increases in the nitric acid content of process fluid will not cause higher corrosion rates for these alloys. The upset condition that was most likely to occur is lowering of the pH of the vessel content by inadvertent addition of 0.5 M nitric acid. Lowering of pH may make a chloride-containing solution more likely to cause pitting of stainless alloys. Increasing the nitric acid content of the process fluid adds more of the pitting-inhibiting nitrate ion to the process fluid. In addition, adding the nitric acid solution to the stream will dilute the chloride content of the process fluid.

Conclusion:
The recommended materials will be able to withstand a plausible inadvertent addition of 0.5 M nitric acid for a limited period.

PLANT ITEM MATERIAL SELECTION DATA SHEET

References:

1. Davis, JR (Ed), 1987, *Corrosion, Vol 13*, In "Metals Handbook", ASM International, Metals Park, OH 44073
2. Davis, JR (Ed), 1994, *Stainless Steels*, In ASM Metals Handbook, ASM International, Metals Park, OH 44073
3. Hamner, NE, 1981, *Corrosion Data Survey*, Metals Section, 5th Ed, NACE International, Houston, TX 77218
4. Koch, GH, 1995, *Localized Corrosion in Halides Other Than Chlorides*, MTI Pub No. 41, Materials Technology Institute of the Chemical Process Industries, Inc, St Louis, MO 63141
5. Sedriks, AJ, 1996, *Corrosion of Stainless Steels*, John Wiley & Sons, Inc., New York, NY 10158
6. Smith, H. D. and M. R. Elmore, 1992, *Corrosion Studies of Carbon Steel under Impinging Jets of Simulated Slurries of Neutralized Current Acid Waste (NCAW) and Neutralized Cladding Removal Waste (NCRW)*, PNL-7816, Pacific Northwest Laboratory, Richland, Washington.

Bibliography:

1. Danielson, MJ & SG Pitman, 2000, *Corrosion Tests of 316L and Hastelloy C-22 in Simulated Tank Waste Solutions*, PNWD-3015 (BNFL-RPT-019, Rev 0), Pacific Northwest Laboratory, Richland WA.
2. Jones, RH (Ed.), 1992, *Stress-Corrosion Cracking*, ASM International, Metals Park, OH 44073
3. Uhlig, HH, 1948, *Corrosion Handbook*, John Wiley & Sons, New York, NY 10158
4. Van Delinder, LS (Ed), 1984, *Corrosion Basics*, NACE International, Houston, TX 77084

PLANT ITEM MATERIAL SELECTION DATA SHEET

OPERATING CONDITIONS

PROCESS CORROSION DATA

Component(s) (Name/ID #) Cs IX treated LAW collection (CXP-VSL-00026A/B/C)

Facility PTF

In Black Cell? Yes

Chemicals	Unit[1]	Contract Max		Non-Routine		Notes
		Leach	No leach	Leach	No Leach	
Aluminum	g/l	3.03E+01	3.05E+01			
Chloride	g/l	1.16E+01	1.40E+01			
Fluoride	g/l	1.38E+01	1.67E+01			
Iron	g/l	2.22E+00	2.50E+00			
Nitrate	g/l	2.14E+02	2.50E+02			
Nitrite	g/l	6.44E+01	7.71E+01			
Phosphate	g/l	4.65E+01	5.45E+01			
Sulfate	g/l	2.47E+01	2.96E+01			
Mercury	g/l	7.26E-02	1.87E-02			
Carbonate	g/l	8.68E+01	9.56E+01			
Undissolved solids	wt%					
Other (NaMnO4, Pb,...)	g/l					
Other	g/l					
pH	N/A					Note 3
Temperature	°F					Note 2

List of Organic Species:

Notes:

1. Concentrations less than 1x 10^{-4} g/l do not need to be reported; list values to two significant digits max.
2. T normal operation 77 °F to 113 °F (same as for CXP-VSL-00001)
3. pH approximately 12 to 14 (same as for CXP-VSL-00001)

Assumptions:

PLANT ITEM MATERIAL SELECTION DATA SHEET

4.3.6 Cs IX Treated LAW Collection Vessels (CXP-VSL-00026A/B/C)

Routine Operations

The Cs IX treated LAW collection vessels (CXP-VSL-00026A, CXP-VSL-00026B, and CXP-VSL-00026C) are designed to collect batches of cesium-depleted LAW. Three vessels are used so that once a vessel is full it can be sampled and then pumped out while other vessels are still receiving or discharging treated LAW. The samples are analyzed and the results are reviewed before determining whether the batch meets cesium concentration specifications and can be sent on or needs to be recycled. A required 24-hour hold time, based on laboratory estimates, is used to ensure that there is adequate time for sampling, analyses (for cesium), and review of results. Each vessel normally receives a continuous flow of cesium-depleted LAW. In normal operations, one of the three vessels will be in a receiving mode, one vessel will be in a sampling/analyses/review mode, while the third vessel will be in a pump-out mode. Each of the three vessels is equipped with level indication (with density correction capability), sampling provisions, and pulse jet mixers for representative sampling of liquid.

Non-Routine Operations that Could Affect Corrosion/Erosion

None identified.

PLANT ITEM MATERIAL SELECTION DATA SHEET

R10667873

CXP-VSL-00004 (PTF)
Cs IX Caustic Rinse Collection Vessel

ISSUED BY
RPP-WTP PDC

- Design Temperature (°F)(max/min): 138/40
- Design Pressure (psig) (max/min): 15/FV:
- Location: incell
- PJM Discharge Velocity (fps): 40
- Drive Cycle: 17 % (at 40 fps)

OFFSPRING ITEMS

CXP-VSL-00006 – CXP-VSL-00009
CXP-PJM-00001, CXP-RFD-00004A/B
CXP-RFD-00005 – CXP-RFD-00006

Contents of this document are Dangerous Waste Permit affecting

Operating conditions are as stated on attached Process Corrosion Data Sheet

Operating Modes Considered:

- The vessel is filled with caustic rinse water.
- The vessel is filled with process condensate or demineralized water.
- No acid is present.

Materials Considered:

Material (UNS No.)	Relative Cost	Acceptable Material	Unacceptable Material
Carbon Steel	0.23		X
304L (S30403)	1.00	X	
316L (S31603)	1.18	X	
6% Mo (N08367/N08926)	7.64	X	
Alloy 22 (N06022)	11.4	X	
Ti-2 (R50400)	10.1		X

Recommended Material: 304 (max 0.030% C; dual certified)

Recommended Corrosion Allowance: 0.040 inch (includes 0.024 inch corrosion allowance and 0.004 inch erosion allowance)

Process & Operations Limitations:

- None

STEVEN WAKEMAN VAIL
STATE OF WASHINGTON
39250
REGISTERED
PROFESSIONAL ENGINEER

3/14/06

EXPIRES: 12/07/07

Please note that source, special nuclear and byproduct materials, as defined in the Atomic Energy Act of 1954 (AEA), are regulated at the U.S. Department of Energy (DOE) facilities exclusively by DOE acting pursuant to its AEA authority. DOE asserts, that pursuant to the AEA, it has sole and exclusive responsibility and authority to regulate source, special nuclear, and byproduct materials at DOE-owned nuclear facilities. Information contained herein on radionuclides is provided for process description purposes only.

This bound document contains a total of 7 sheets.

REV	DATE	REASON FOR REVISION	PREPARER	CHECKER	APPROVER
1	3/14/06	Issued for Permitting Use			
0	5/18/04	Issued for Permitting Use	DLA	JRD	APR

PLANT ITEM MATERIAL SELECTION DATA SHEET

Corrosion Considerations:

This vessel allows recycle and reuse of the originally nominal 0.25 M NaOH solution from the Cs IX column. The solution exits the column with a nominal caustic concentration of about 0.1 M NaOH. This vessel can also receive fresh nominal 0.25 M NaOH solution as well as process condensate from one of the process condensate vessels.

a General Corrosion
The caustic rinse collection vessel collects rinse water from the IX columns during the wash cycle. The rinse solution is made up of diluted caustic solution with process condensate and/or demineralized water

Hamner (1981) lists a corrosion rate for 304 (and 304L) in NaOH of less than 20 mpy (500 μm/y) at 77°F and over 20 mpy at 122°F. He shows 316 (and 316L) has a rate of less than 2 mpy up to 122°F and 50% NaOH. Dillon (2000) and Sedriks (1996) both state that the 300 series alloys are acceptable in up to 50% NaOH at temperatures up to about 122°F or slightly above. Davis (1994) states the corrosion rate for 304L in pure NaOH will be less than about 0.1 mpy up to about 212°F though Sedriks states the data beyond about 122°F are incorrect.

In this system, the normal hydroxide concentrations and temperatures are such that 304L stainless steel will be acceptable.

Conclusion:
At the given temperatures, 304L and 316L are expected to be sufficiently resistant to the waste solution with a probable general corrosion rate of less than 1 mpy.

b Pitting Corrosion
Chloride is known to cause pitting in acid and neutral solutions. Dillon (2000) is of the opinion that in alkaline solutions, pH>12, chlorides are likely to promote pitting only in tight crevices. Dillon and Koch (1995) are both of the opinion that fluoride will have little effect in an alkaline media. If the chloride concentrations are low at the low pH and high at the high pH, then even the low pH conditions are expected to be benign towards 304L. Revie (2000) and Uhlig (1948) note nitrate inhibits chloride pitting.

Normally the vessel is to operate at 77 to 113 °F. At the normal temperature, based on the work of Zapp (1998) and others, 304L stainless steel would be acceptable in the proposed alkaline conditions.

If the vessel were filled with process water and left stagnant, there would be a tendency to pit. The time to initiate would depend on the amount of residual chlorides.

Conclusion:
Localized corrosion, such as pitting, is not expected. At the stated operating conditions304L will be suitable.

c End Grain Corrosion
End grain corrosion only occurs in metal with exposed end grains and in highly oxidizing acid conditions.

Conclusion:
Not likely in this system.

d Stress Corrosion Cracking
The exact amount of chloride required to cause stress corrosion cracking is unknown. In part this is because the amount varies with temperature, metal sensitization, and the environment. But it is also unknown because chloride tends to concentrate under heat transfer conditions, by evaporation, and electrochemically during a corrosion process. Hence, even as little as a few ppm can lead to cracking under some conditions. Generally, as seen in Sedriks (1996) and Davis (1987), chloride stress corrosion cracking does not usually occur below about 140°F. During the normal operations, either 304L or 316L are expected to be satisfactory.

Neither 304L nor 316L are susceptible to caustic cracking at the proposed conditions.

Conclusion:
At the normal operating environment, the alloy recommended is 304L.

PLANT ITEM MATERIAL SELECTION DATA SHEET

e Crevice Corrosion
See Pitting.

Conclusion:
See Pitting

f Corrosion at Welds
Corrosion at welds is not considered a problem in the proposed environment.

Conclusion:
Weld corrosion is not considered a problem for this system.

g Microbiologically Induced Corrosion (MIC)
The proposed operating conditions are not conducive to microbial growth if microbes were introduced.

Conclusion:
MIC is not considered a problem.

h Fatigue/Corrosion Fatigue
Not expected to be a concern.

Conclusions
Not a concern.

i Vapor Phase Corrosion
The vapor phase portion of the vessel is expected to be contacted with particles of waste from splashing. It is unknown whether this will be sufficiently washed or whether residual acids or solids will be present. Under the stated conditions, with wash ring present in the vessel, this is not expected to be a concern

Conclusion:
Not a concern.

j Erosion
Based on past experiments by Smith & Elmore (1992), the solids are soft and erosion is not expected to be a concern for the vessel wall. Based on 24590-WTP-RPT-M-04-0008, a general erosion allowance of 0.004 inch is adequate for components with solids content less than 2 wt%. No localized protection is necessary for the applicable portions of the bottom head to accommodate PJM discharge velocities of up to 12 m/s for a usage of 100 % operation as documented in 24590-WTP-M0C-50-00004.

The PJM nozzle requires no additional protection as documented in 24590-WTP-M0C-50-00004.

Conclusion:
The recommended corrosion allowance provides sufficient protection for erosion of the vessel.

k Galling of Moving Surfaces
Not applicable.

Conclusion:
Not applicable.

l Fretting/Wear
No contacting surfaces expected.

Conclusion:
Not applicable.

PLANT ITEM MATERIAL SELECTION DATA SHEET

m Galvanic Corrosion
No dissimilar metals are present.

Conclusion:
Not applicable.

n Cavitation
None expected.

Conclusion:
Not believed to be of concern.

o Creep
The temperatures are too low to be a concern.

Conclusion:
Not applicable.

p Inadvertent Nitric Acid Addition
Higher chloride contents and higher temperatures usually require higher alloy materials. Nitrate ions inhibit the pitting and crevice corrosion of stainless alloys. Furthermore, nitric acid passivates these alloys; therefore, lower pH values brought about by increases in the nitric acid content of process fluid will not cause higher corrosion rates for these alloys. The upset condition that was most likely to occur is lowering of the pH of the vessel content by inadvertent addition of 0.5 M nitric acid. Lowering of pH may make a chloride-containing solution more likely to cause pitting of stainless alloys. Increasing the nitric acid content of the process fluid adds more of the pitting-inhibiting nitrate ion to the process fluid. In addition, adding the nitric acid solution to the stream will dilute the chloride content of the process fluid.

Conclusion:
The recommended materials will be able to withstand a plausible inadvertent addition of 0.5 M nitric acid for a limited period.

PLANT ITEM MATERIAL SELECTION DATA SHEET

References:

1. 24590-WTP-M0C-50-00004, Rev. D, *Wear Allowance for WTP Waste Slurry Systems*
2. 24590-WTP-RPT-PR-04-0001, Rev. B, *WTP Process Corrosion Data*
3. CCN 000853, Zapp, PE, 1998, *Preliminary Assessment of Evaporator Materials of Construction*, BNF—003-98-0029, Rev 0, Westinghouse Savannah River Co., Inc for BNFL Inc.
4. CCN 130172, Dillon, CP (Nickel Development Institute), Personal Communication to J R Divine (ChemMet, Ltd., PC), 3 Feb 2000.
5. Davis, JR (Ed), 1987, *Corrosion, Vol 13*, In "Metals Handbook", ASM International, Metals Park, OH 44073
6. Davis, JR (Ed), 1994, *Stainless Steels*, In ASM Metals Handbook, ASM International, Metals Park, OH 44073
7. Hamner, NE, 1981, *Corrosion Data Survey*, Metals Section, 5th Ed, NACE International, Houston, TX 77218
8. Koch, GH, 1995, *Localized Corrosion in Halides Other Than Chlorides*, MTI Pub No. 41, Materials Technology Institute of the Chemical Process Industries, Inc, St Louis, MO 63141
9. Revie, WW, 2000. *Uhlig's Corrosion Handbook*, 2nd Edition, Wiley-Interscience, New York, NY 10158
10. Sedriks, AJ, 1996, *Corrosion of Stainless Steels*, John Wiley & Sons, Inc., New York, NY 10158
11. Smith, H. D. and M. R. Elmore, 1992, *Corrosion Studies of Carbon Steel under Impinging Jets of Simulated Slurries of Neutralized Current Acid Waste (NCAW) and Neutralized Cladding Removal Waste (NCRW)*, PNL-7816, Pacific Northwest Laboratory, Richland, Washington.
12. Uhlig, HH, 1948, *Corrosion Handbook*, John Wiley & Sons, New York, NY 10158

Bibliography:

1. CCN 130171, Ohl, PC to PG Johnson, Internal Memo, Westinghouse Hanford Co, *Technical Bases for Cl- and pH Limits for Liquid Waste Tank Cars*, MA: PCO:90/01, January 16, 1990.
2. Jones, RH (Ed.), 1992, *Stress-Corrosion Cracking*, ASM International, Metals Park, OH 44073
3. Van Delinder, LS (Ed), 1984, *Corrosion Basics*, NACE International, Houston, TX 77084

PLANT ITEM MATERIAL SELECTION DATA SHEET

24590-WTP-RPT-PR-04-0001, Rev. B
WTP Process Corrosion Data

PROCESS CORROSION DATA SHEET

Component(s) (Name/ID #) Cs IX caustic rinse collection vessel (CXP-VSL-00004)

Facility PTF

In Black Cell? Yes

Chemicals	Unit[1]	Contract Max		Non-Routine		Notes
		Leach	No leach	Leach	No Leach	
Aluminum	g/l					
Chloride	g/l					
Fluoride	g/l					
Iron	g/l					
Nitrate	g/l	8.70E-04	1.01E-03			
Nitrite	g/l	1.30E-04	1.55E-04			
Phosphate	g/l	1.35E-04	1.58E-04			
Sulfate	g/l					
Mercury	g/l					
Carbonate	g/l	2.53E-04	2.78E-04			
Undissolved solids	wt%					
Other (NaMnO4, Pb,...)	g/l					
Other	g/l					
pH	N/A					Assumption 1
Temperature	°F					Note 2

List of Organic Species:

References

System Description: 24590-PTF-3YD-CXP-00001, Rev 0
Mass Balance Document: 24590-WTP-M4C-V11T-00005, Rev A
Normal Input Stream #: CXP13,CXP22,CXP14
Off Normal Input Stream # (e.g., overflow from other vessels): N/A
P&ID: N/A
PFD: 24590-PTF-M5-V17T P0012, Rev 0
Technical Reports: N/A

Notes:

1. Concentrations less than 1x 10^{-4} g/l do not need to be reported; list values to two significant digits max.
2. Tnormal operation 77 °F to 113 °F (24590 PTF-MVC-CXP-00004, Rev 0)

Assumptions:

1. Process condensate at pH 7, stream CXP13 has pH 13 (0.1M NaOH)

PLANT ITEM MATERIAL SELECTION DATA SHEET

4.3.4 Cs-IX Caustic Rinse Collection Vessel (CXP-VSL-00004)

Routine Operations

The Cs-IX caustic rinse collection vessel (CXP-VSL-00004) allows recycle and reuse of the originally nominal 0.25 M NaOH solution. The Cs-IX caustic rinse collection vessel is designed to receive spent caustic regeneration solution that has been discharged from a Cs IX column (CXP-IXC-00001, -00002, -00003, or -00004) during the regeneration sequence.

The spent regeneration solution, which originates as a fresh 0.25 M NaOH solution before introduction into the column, exits the column with a nominal caustic concentration of about 0.1 M NaOH. This solution is then collected in the Cs-IX caustic rinse collection vessel for use in the LAW displacement sequence. During the column regeneration, 2500 gallons of fresh 0.25 M NaOH solution are fed to a column. A significant portion of the initial NaOH that is fed to the column reacts with the resin and, as a result, the initial solution exiting the column is depleted in NaOH. Only about half of the volume of the total batch of regeneration solution is captured for use in the LAW displacement sequence; since the later half has a higher strength in NaOH, it is captured. This is accomplished by valving the first portion of the exiting regeneration solution to one of the acidic/alkaline effluent vessels (PWD-VSL-00015 or -00016), and valving the second portion to the Cs-IX caustic rinse collection vessel.

For startup and makeup purposes, the Cs-IX caustic rinse collection vessel can receive fresh nominal 0.25 M NaOH solution from an outcell tank (SHR-TK-00005). It can also receive (as a source of water) process condensate from one of the process condensate tanks (RLD-TK-00006-A or -B) via a header. Some adjustment of the NaOH concentration can be made using these two sources. The solutions made in the Cs-IX caustic rinse collection vessel can also be used to cool Cs IX columns (through the use of flow-through cooling) in abnormal situations. Alternatively, the Cs-IX caustic rinse collection vessel can be used to receive batches of cooling solution that have passed through a column.

Non-Routine Operations that Could Affect Corrosion/Erosion

None identified.

PLANT ITEM MATERIAL SELECTION DATA SHEET

R10667874

CXP-VSL-00005 - (PTF)
Cs IX Reagent Vessel

- Design Temperature (°F)(max/min): 138/40
- Design Pressure (psig) (max/min): 15/FV
- Location: incell

ISSUED BY
RPP-WTP PDC

Contents of this document are Dangerous Waste Permit affecting

Operating conditions are as stated on attached Process Corrosion Data Sheet

Operating Modes Considered:

- The vessel is filled with caustic.
- The vessel is filled with demineralized water.
- The vessel is filled with nitric acid (standby condition).

Materials Considered:

Material (UNS No.)	Relative Cost	Acceptable Material	Unacceptable Material
Carbon Steel	0.23		X
304L (S30403)	1.00	X	
316L (S31603)	1.18	X	
6% Mo (N08367/N08926)	7.64	X	
Alloy 22 (N06022)	11.4	X	
Ti-2 (R50400)	10.1		X

Recommended Material: 304 (max 0.030% C; dual certified)

Recommended Corrosion Allowance: 0.040 inch (includes 0.024 inch corrosion allowance and 0.004 inch erosion allowance)

Process & Operations Limitations:

- Develop rinsing/flushing procedure for acid and water (rinse prior to adding acid after receiving solids from CXP-VSL-00004).

STEVEN WAKEMAN VAIL
STATE OF WASHINGTON
39250
REGISTERED
PROFESSIONAL ENGINEER
3/8/06
EXPIRES: 12/07/

Please note that source, special nuclear and byproduct materials, as defined in the Atomic Energy Act of 1954 (AEA), are regulated at the U.S. Department of Energy (DOE) facilities exclusively by DOE acting pursuant to its AEA authority. DOE asserts, that pursuant to the AEA, it has sole and exclusive responsibility and authority to regulate source, special nuclear, and byproduct materials at DOE-owned nuclear facilities. Information contained herein on radionuclides is provided for process description purposes only.

This bound document contains a total of 7 sheets.

REV	DATE	REASON FOR REVISION	PREPARER	CHECKER	APPROVER
1	3/8/06	Issued for Permitting Use		HMK	SWVail
0	5/18/04	Issued for Permitting Use	DLA	JRD	APR

PLANT ITEM MATERIAL SELECTION DATA SHEET

Corrosion Considerations:

This vessel is expected to receive demineralized water, nominal 0.25 M NaOH solution, nominal 0.1 M NaOH solution, standby nitric acid, and recycled spent regeneration caustic solution from CXP-VSL-00004.

a General Corrosion
Hamner (1981) lists a corrosion rate for 304 (and 304L) in NaOH of less than 20 mpy (500 μm/y) at 77°F and over 20 mpy at 122°F. He shows 316 (and 316L) has a rate of less than 2 mpy up to 122°F and 50% NaOH. Dillon (2000) and Sedriks (1996) both state that the 300 series alloys are acceptable in up to 50% NaOH at temperatures up to about 122°F or slightly above. Davis (1994) states the corrosion rate for 304L in pure NaOH will be less than about 0.1 mpy up to about 212°F though Sedriks states the data beyond about 122°F are incorrect.

In this system, the normal hydroxide concentrations and temperatures are such that 304L or a higher alloy stainless steel will be acceptable.

The addition or presence of 0.5 M HNO_3 is not a concern for the given concentrations.

Conclusion:
At temperatures less than about 140°F, 304L or better is expected to be sufficiently resistant to the solution with a probable general corrosion rate of less than 1 mpy.

b Pitting Corrosion
The nitric acid does not contain chloride or fluoride. The NaOH may contain chloride impurities. The two possible opportunities for pitting are either acidifying high chloride waste or leaving the vessel full of DIW with residual chloride.

Chloride is known to cause pitting in acid and neutral solutions. Dillon (2000) is of the opinion that in alkaline solutions, pH>12, chlorides are likely to promote pitting only in tight crevices. Dillon and Koch (1995) are both of the opinion that fluoride will have little effect in an alkaline media. If the chloride concentrations are low at the low pH and high at the high pH, then even the low pH conditions are expected to be benign towards 304L. Revie (2000) and Uhlig (1948) note nitrate inhibits chloride pitting.

Normally the vessel is to operate with a fluid temperature 77°F. At this temperature, based on the work of Zapp (1998) and others, 304L stainless steel would be acceptable in the proposed alkaline conditions.

The small quantity of halides will not be harmful even if the solution is neutralized or modified with HNO_3.

If the vessel were filled with process water and left stagnant, there would be a tendency to pit. The time to initiate would depend on the amount of residual chlorides.

Conclusion:
Localized corrosion, such as pitting, is not expected. It is expected that 304L will be satisfactory.

c End Grain Corrosion
End grain corrosion only occurs in metal with exposed end grains and in highly oxidizing acid conditions.

Conclusion:
Not expected in this system.

d Stress Corrosion Cracking
The exact amount of chloride required to cause stress corrosion cracking is unknown. In part this is because the amount varies with temperature, metal sensitization, and the environment. But it is also unknown because chloride tends to concentrate under heat transfer conditions, by evaporation, and electrochemically during a corrosion process. Hence, even as little as a few ppm can lead to cracking under some conditions. Generally, as seen in Sedriks (1996) and Davis (1987), chloride stress corrosion cracking does not usually occur below about 140°F. During the normal operations, either 304L or 316L are expected to be satisfactory.

Because of the potential for caustic cracking, 304L and 316L are generally not recommended for use above 140°F. However, based on the proposed temperatures, either is acceptable.

Conclusion:
At the normal operating environment, the alloy recommended is 304L stainless.

e Crevice Corrosion
See Pitting.

Conclusion:
See Pitting

PLANT ITEM MATERIAL SELECTION DATA SHEET

f Corrosion at Welds
Corrosion at welds is not considered a problem in the proposed environment.

Conclusion:
Weld corrosion is not considered a problem for this system.

g Microbiologically Induced Corrosion (MIC)
The proposed operating conditions are conducive to microbial growth if microbes were introduced. The use of DIW as process water should minimize the possibility of introduction of microbes.

Conclusion:
MIC is not considered a problem.

h Fatigue/Corrosion Fatigue
Not expected to be a concern.

Conclusions
Not a concern.

i Vapor Phase Corrosion
The vapor phase portion of the vessel is expected to be contacted with particles of waste from splashing. Wash rings within vessel should provide sufficient rinsing to minimize presence of deposits.

Conclusion:
Not believed to be of concern.

j Erosion
Velocities within the vessel are expected to be low. Erosion allowance of 0.004 inch for components with low solids content (< 2 wt%) at low velocities is based on 24590-WTP-RPT-M-04-0008.

Conclusion:
Not believed to be of concern.

k Galling of Moving Surfaces
Not applicable.

Conclusion:
Not applicable.

l Fretting/Wear
No contacting surfaces expected.

Conclusion:
Not applicable.

m Galvanic Corrosion
No dissimilar metals are present.

Conclusion:
Not applicable.

n Cavitation
None expected.

Conclusion:
Not believed to be of concern.

o Creep
The temperatures are too low to be a concern.

Conclusion:
Not applicable.

PLANT ITEM MATERIAL SELECTION DATA SHEET

p Inadvertent Nitric Acid Addition

Higher chloride contents and higher temperatures usually require higher alloy materials. Nitrate ions inhibit the pitting and crevice corrosion of stainless alloys. Furthermore, nitric acid passivates these alloys; therefore, lower pH values brought about by increases in the nitric acid content of process fluid will not cause higher corrosion rates for these alloys. The upset condition that was most likely to occur is lowering of the pH of the vessel content by inadvertent addition of 0.5 M nitric acid. Lowering of pH may make a chloride-containing solution more likely to cause pitting of stainless alloys. Increasing the nitric acid content of the process fluid adds more of the pitting-inhibiting nitrate ion to the process fluid. In addition, adding the nitric acid solution to the stream will dilute the chloride content of the process fluid.

Conclusion:

The recommended materials will be able to withstand a plausible inadvertent addition of 0.5 M nitric acid for a limited period.

PLANT ITEM MATERIAL SELECTION DATA SHEET

References:

1. 24590-WTP-RPT-M-04-0008, Rev. 2, *Evaluation Of Stainless Steel Wear Rates In WTP Waste Streams At Low Velocities*
2. 24590-WTP-RPT-PR-04-0001, Rev. B, *WTP Process Corrosion Data*
3. CCN 130173, Dillon, CP (Nickel Development Institute), Personal Communication to J R Divine (ChemMet, Ltd., PC), 3 Feb 2000.
4. Davis, JR (Ed), 1987, *Corrosion, Vol 13*, In "Metals Handbook", ASM International, Metals Park, OH 44073
5. Davis, JR (Ed), 1994, *Stainless Steels*, In ASM Metals Handbook, ASM International, Metals Park, OH 44073
6. Hamner, NE, 1981, *Corrosion Data Survey*, Metals Section, 5th Ed, NACE International, Houston, TX 77218
7. Koch, GH, 1995, *Localized Corrosion in Halides Other Than Chlorides*, MTI Pub No. 41, Materials Technology Institute of the Chemical Process Industries, Inc, St Louis, MO 63141
8. Revie, WW, 2000. *Uhlig's Corrosion Handbook*, 2nd Edition, Wiley-Interscience, New York, NY 10158
9. Sedriks, AJ, 1996, *Corrosion of Stainless Steels*, John Wiley & Sons, Inc., New York, NY 10158
10. Uhlig, HH, 1948, *Corrosion Handbook*, John Wiley & Sons, New York, NY 10158
11. Zapp, PE, 1998, *Preliminary Assessment of Evaporator Materials of Construction*, BNF—003-98-0029, Rev 0, Westinghouse Savannah River Co., Inc for BNFL Inc.

Bibliography:

1. CCN 130171, Ohl, PC to PG Johnson, Internal Memo, Westinghouse Hanford Co, *Technical Bases for Cl- and pH Limits for Liquid Waste Tank Cars*, MA: PCO:90/01, January 16, 1990.
2. Jones, RH (Ed.), 1992, *Stress-Corrosion Cracking*, ASM International, Metals Park, OH 44073
3. Van Delinder, LS (Ed), 1984, *Corrosion Basics*, NACE International, Houston, TX 77084

PLANT ITEM MATERIAL SELECTION DATA SHEET

24590-WTP-RPT-PR-04-0001, Rev. B
WTP Process Corrosion Data

PROCESS CORROSION DATA SHEET

Component(s) (Name/ID #) Cs IX reagent vessel (CXP-VSL-00005)

Facility PTF

In Black Cell? Yes

Chemicals	Unit[1]	Contract Max		Non-Routine		Notes
		Leach	No leach	Leach	No Leach	
Aluminum	g/l					
Chloride	g/l					
Fluoride	g/l					
Iron	g/l					
Nitrate	g/l	8.83E-04	1.03E-03			
Nitrite	g/l	1.32E-04	1.57E-04			
Phosphate	g/l	1.37E-04	1.61E-04			
Sulfate	g/l					
Mercury	g/l					
Carbonate	g/l	2.56E-04	2.82E-04			
Undissolved solids	wt%					
Other (NaMnO4, Pb,...)	g/l					
Other	g/l					
pH	N/A	13.0	13.0			Note 2
Temperature	°F					Assumption 1

List of Organic Species:

References

System Description: 24590-PTF-3YD-CXP-00001, Rev 0
Mass Balance Document: 24590-WTP-M4C-V11T-00005, Rev A
Normal Input Stream #: CXP03
Off Normal Input Stream # (e.g., overflow from other vessels): N/A
P&ID: N/A
PFD: 24590-PTF-M5-V17T P0012, Rev 0
Technical Reports: N/A

Notes:

1. Concentrations less than 1x 10^{-4} g/l do not need to be reported; list values to two significant digits max.
2. Normally pH is approximately 13. This vessel also receives 0.1M NaOH, 0.25M NaOH, and 0.5 M nitric acid for chemical adjustment.

Assumptions:

1. Tnormal operation is 77 °F, Tmax 113 °F (24590-PTF-MVD-CXP-P0016, Rev 0)

4.3.5 Cs-IX Reagent Vessel (CXP-VSL-00005)

The CS-IX reagent vessel (CXP-VSL-00005) provides reagents for the Cs ion exchange columns.

Routine Operations

The Cs-IX reagent vessel is designed to receive demineralized water, nominal 0.25 M NaOH solution, nominal 0.1 M NaOH solution, and standby nitric acid from outcell sources as fresh reagents. In addition, the Cs-IX reagent vessel receives recycled spent regeneration caustic solution from the Cs-IX caustic rinse collection vessel (CXP-VSL-00004).

The Cs-IX reagent vessel functions like a breakpot, feeding liquids to the suction of the Cs-IX feed pumps and preventing backflow of contaminated fluids to clean systems. Unlike a true breakpot, however, there are valves on the bottom draining discharge line of the Cs-IX reagent vessel because the discharge must serve two pumps on separate occasions. The Cs-IX reagent vessel also serves as a source for ventilation of the Cs IX columns. The Cs-IX reagent vessel has a demister (with pressure-drop-measurement included in the top portion of this vessel) to enable demisting of any potentially entrained liquid with the vented column gasses.

The Cs-IX reagent vessel normally receives the following:

- Demineralized water from outcell tank DIW-TK-00001 during the pre-elution rinse and post-elution rinse sequences
- Nominal 0.25 M NaOH solution from the balance of facilities (BOF) header during the regeneration sequence

Non-Routine Operations that Could Affect Corrosion/Erosion

In abnormal situations, the Cs-IX reagent vessel can receive the following:

- Nominal 0.1 M NaOH solution as recycled spent regeneration solution from the Cs-IX caustic rinse collection vessel (CXP-VSL-00004). This solution is used in the LAW displacement sequence. The vessel can also receive fresh nominal 0.1 M NaOH solution for emergency cooling from outcell tank SHR-TK-00001.
- Standby (0.5 M) nitric acid from outcell tank NAR-TK-00007.

This vessel also overflows to PWD-VSL-00033.

PLANT ITEM MATERIAL SELECTION DATA SHEET

R10460393

FEP-VSL-00017A/B (PTF)
Waste Feed Evaporator Feed Vessel

- Design Temperature (°F)(max/min): 237/40
- Design Pressure (psig) (max/min): 15/-10
- Location: incell
- PJM Discharge Velocity (fps): 40
- Drive Cycle: 17 % (at 40 fps)

Off spring items

FEP-VSL-00017A
FEP-PJM-00001 – FEP-PJM-00007,
FEP-PJM-00017

FEP-VSL-00017B
FEP-PJM-00008 – FEP-PJM-00015

Contents of this document are Dangerous Waste Permit affecting

ISSUED BY RPP-WTP PDC

Operating conditions are as stated on sheets 6 and 7

Assumptions: No steam ejectors, no acid additions without prior water flush.

Operating Modes Considered:

- Normal operations

Materials Considered:

Material (UNS No.)	Relative Cost	Acceptable Material	Unacceptable Material
Carbon Steel	0.23		X
304L (S30403)	1.00		X
316L (S31603)	1.18	X	
6% Mo (N08367/N08926)	7.64	X	
Alloy 22 (N06022)	11.4	X	
Ti-2 (R50400)	10.1		X

Recommended Material: 316 (max 0.030% C; dual certified)

Recommended Corrosion Allowance: 0.04 inch (includes 0.00 inch erosion allowance; additional localized protection required and discussed in section j)

Process & Operations Limitations:

- Develop rinsing/flushing procedure for water and acid

STEVEN WAKEMAN VAIL
STATE OF WASHINGTON
39250
REGISTERED PROFESSIONAL ENGINEER
EXPIRES: 12/07/05

1/24/05

Please note that source, special nuclear and byproduct materials, as defined in the Atomic Energy Act of 1954 (AEA), are regulated at the U.S. Department of Energy (DOE) facilities exclusively by DOE acting pursuant to its AEA authority. DOE asserts, that pursuant to the AEA, it has sole and exclusive responsibility and authority to regulate source, special nuclear, and byproduct materials at DOE-owned nuclear facilities. Information contained herein on radionuclides is provided for process description purposes only.

This bound document contains a total of 7 sheets.

REV	DATE	REASON FOR REVISION	PREPARER	CHECKER	APPROVER
1	1/24/05	Issued for Permitting Use			
0	3/19/04	Issued for Permitting Use	DLA	JRD	SWV

PLANT ITEM MATERIAL SELECTION DATA SHEET

Corrosion Considerations:

Vessels receive waste feed from FRP-VSL-00002A/B/C/D and recycles routed from PWD-VSL-00044, PWD-VSL-00015/16, RDP-VSL-00002A/B/C and UFP-VSL-00001A/B. Vessels are equipped with emptying ejectors to remove vessel heel. Emptying ejectors are located external to vessel.

a General Corrosion
Based on Hamner's data (1981), 304 (and 304L) has a corrosion rate of less than 20 mpy (500 μm/y) in NaOH at 77°F and over 20 mpy at 122°F. He shows 316 (and 316L) has a rate of less than 2 mpy in 50% NaOH at up to 122°F. Sedriks (1996) states that the 300 series are acceptable in up to 50% NaOH at temperatures up to about 122°F.

Danielson & Pitman (2000), based on short-term studies, suggest a corrosion rate of about 0.5 mpy for 316L. This corroborates Sedriks.

Work has shown that 304L corroded less than 316L in simulated complexant waste with fluorides and chlorides at 140°F. The corrosion rate of 304L after six months of testing was less than 0.2 mpy and that of 316L about 0.6 mpy.

In review of the 242-A Evaporator, it has been found that in waste similar to that expected in WTP, the corrosion, of 304L after about 2 years of operation was less than the accepted variability of the plate. The uncertainties in the starting thickness made the exact calculation of a corrosion rate uncertain though for 304L it appeared to be less than about 10 mpy. However, no cracking or pitting was noted.

Conclusion:
At temperatures less than 122°F, 304L, or higher alloys, is expected to be sufficiently resistant to the waste solution with a probable general corrosion rate of less than 1 mpy.

b Pitting Corrosion
It is thought that in alkaline solutions, pH>12, chlorides are likely to promote pitting only in tight crevices. 304L would probably be acceptable, but the use of 316L would provide a benefit because of their resistance to pitting by chlorides. Davis (1994) recommends the use of 316L over 304L. Koch (1995) is of the opinion that fluoride will have little effect. No hint of pitting was evident after six months at 140°F with heat transfer in simulated evaporator waste.

Revie (2000) notes that nitrate inhibits chloride corrosion. Therefore, the high nitrate concentrations in the waste are expected to be beneficial.

Conclusion:
316L is recommended to offer greater protection against pitting.

c End Grain Corrosion
End grain corrosion only occurs in metal with exposed end grains and in highly oxidizing acid conditions. This system is generally alkaline. If nitric acid is used for cleaning, cleaning should not be performed at higher than 122°F.

Conclusion:
Not applicable to this system.

d Stress Corrosion Cracking
The exact amount of chloride required to stress corrosion crack stainless steel is unknown. In part this is because the amount varies with temperature, metal sensitization, and the environment. But it is also unknown because chloride tends to concentrate under heat transfer conditions, by evaporation, and electrochemically during a corrosion process. Hence, even as little as 10 ppm can lead to cracking under some conditions. Generally, as seen in Sedriks (1996) and Davis (1987), stress corrosion cracking does not usually occur below about 140°F. Further, the use of "L" grade stainless reduces the opportunity for sensitization. From the above references, it also observed that alkaline conditions reduce the probability of the initiation of stress corrosion cracking to essentially zero. However, should a pit or crevice, including a deposit, be present where the environment can become acid, then the alkaline environment will no longer have an effect.

Conclusion:
316L is recommended to offer greater protection against pitting and therefore reduce the likelihood of cracking.

e Crevice Corrosion
Essentially the same comments and conclusions obtained for pitting are valid here.

Conclusion:
Same as for pitting.

f Corrosion at Welds
Corrosion at welds is not considered a problem in the proposed environment.

Conclusion:
Weld corrosion is not considered a problem for this system.

PLANT ITEM MATERIAL SELECTION DATA SHEET

g Microbiologically Induced Corrosion (MIC)
MIC typically is not prevalent in high pH solutions. Most microbes prefer a pH below 7 though some have been grown at above 9.5. Further, microbial growth is normally not a concern in tanks.

Conclusion:
MIC is not a concern in the vessels.

h Fatigue/Corrosion Fatigue
Corrosion fatigue is a not expected to be a problem in these vessels.

Conclusions
Not expected to be a concern.

i Vapor Phase Corrosion
Because of the highly alkaline conditions, no free HF or HCl is expected to be present in the vapor phase and no uniform/general corrosion is expected. However, because of the air operated ejectors and agitators, it is likely aerosols will be formed that will deposit on the roof of the tank. If there is condensation, these might be washed off.

Conclusion:
Vapor phase corrosion will not be a concern. 316L is recommended.

j Erosion
Based on past experiments by Smith & Elmore (1992), the solids are soft and erosion is not expected to be a concern for the vessel wall. Additional 316L stainless steel should be provided as localized protection for the applicable portions of the bottom head to accommodate PJM discharge velocities of up to 12 m/s with normal maximum solids concentrations of 4 wt% and maximum solids concentrations of 5 wt% with a usage of 46 % operation. Vessels FEP-VSL-00017A/B require at least 0 094-inch additional protection. The 5 wt% is considered to be conservative. The faction of time the solids concentration is expected to be at maximum is 10 %. During normal operation, 90 % of the time, the solids content of FEP-VSL-00017A/B is expected to be 4 %.

The wear of the PJM nozzles can occur from flow for both the discharge and reflood cycles of operation. At least 0.060–inch of additional 316L stainless steel should be provided on the inner surface of the PJM nozzle to accommodate wear due to PJM discharge and suction velocities with normal solids concentrations of 4 wt% and a maximum solids concentration of 5 wt% for usage of 46 % operation

Conclusion:
The recommended corrosion allowance provides sufficient protection for erosion of the vessel wall. Additional localized protection for the bottom head will accommodate PJM discharge velocities and for the PJM nozzles will accommodate PJM discharge and reflood velocities.

k Galling of Moving Surfaces
There are no moving surfaces within the vessels. Connections are welded and not bolted.

Conclusion:
Galling is of no concern in these vessels.

l Fretting/Wear
There are no contacting surfaces that are part of the vessel.

Conclusion:
Fretting and wear are not of concern.

m Galvanic Corrosion
The vessel contains no dissimilar metals.

Conclusion:
Galvanic corrosion is not a concern.

n Cavitation
None expected.

Conclusion:
Not believed to be of concern.

o Creep
Creep is a high temperature phenomenon, occurring at greater than about 932°F. This system operates at approximately 75 °F.

Conclusion:
Creep is not a concern.

PLANT ITEM MATERIAL SELECTION DATA SHEET

p Inadvertent Nitric Acid Addition

Higher chloride contents and higher temperatures usually require higher alloy materials. Nitrate ions inhibit the pitting and crevice corrosion of stainless alloys. Furthermore, nitric acid passivates these alloys; therefore, lower pH values brought about by increases in the nitric acid content of process fluid will not cause higher corrosion rates for these alloys. The upset condition that was most likely to occur is lowering of the pH of the vessel content by inadvertent addition of 0.5 M nitric acid. Lowering of pH may make a chloride-containing solution more likely to cause pitting of stainless alloys. Increasing the nitric acid content of the process fluid adds more of the pitting-inhibiting nitrate ion to the process fluid. In addition, adding the nitric acid solution to the stream will dilute the chloride content of the process fluid.

Conclusion:

The recommended materials will be able to withstand a plausible inadvertent addition of 0.5 M nitric acid for a limited period.

PLANT ITEM MATERIAL SELECTION DATA SHEET

References:

1. Danielson, MJ & SG Pitman, 2000, *Corrosion Tests of 316L and Hastelloy C-22 in Simulated Tank Waste Solutions*, PNWD-3015 (BNFL-RPT-019, Rev 0), Pacific Northwest Laboratory, Richland WA.
2. Davis, JR (Ed), 1987, *Corrosion, Vol 13*, In "Metals Handbook", ASM International, Metals Park, OH 44073
3. Davis, JR (Ed), 1994, *Stainless Steels*, In ASM Metals Handbook, ASM International, Metals Park, OH 44073
4. Hamner, NE, 1981, *Corrosion Data Survey*, Metals Section, 5th Ed, NACE International, Houston, TX 77218
5. Koch, GH, 1995, *Localized Corrosion in Halides Other Than Chlorides*, MTI Pub No. 41, Materials Technology Institute of the Chemical Process Industries, Inc, St Louis, MO 63141
6. Revie, WW, 2000. *Uhlig's Corrosion Handbook*, 2nd Edition, Wiley-Interscience, New York, NY 10158
7. Sedriks, AJ, 1996, *Corrosion of Stainless Steels*, John Wiley & Sons, Inc., New York, NY 10158
8. Smith, H. D. and M. R. Elmore, 1992, *Corrosion Studies of Carbon Steel under Impinging Jets of Simulated Slurries of Neutralized Current Acid Waste (NCAW) and Neutralized Cladding Removal Waste (NCRW)*, PNL-7816, Pacific Northwest Laboratory, Richland, Washington.

Bibliography:

1. Agarwal, DC, *Nickel and Nickel Alloys*, In: Revie, WW, 2000. *Uhlig's Corrosion Handbook*, 2nd Edition, Wiley-Interscience, New York, NY 10158
2. Berhardsson, S, R Mellstrom, and J Oredsson, 1981, *Properties of Two Highly corrosion Resistant Duplex Stainless Steels*, Paper 124, presented at Corrosion 81, NACE International, Houston, TX 77218
3. Jones, RH (Ed.), 1992, *Stress-Corrosion Cracking*, ASM International, Metals Park, OH 44073
4. Phull, BS, WL Mathay, & RW Ross, 2000, *Corrosion Resistance of Duplex and 4-6% Mo-Containing Stainless Steels in FGD Scrubber Absorber Slurry Environments*, Presented at Corrosion 2000, Orlando, FL, March 26-31, 2000, NACE International, Houston TX 77218.
5. Uhlig, HH, 1948, *Corrosion Handbook*, John Wiley & Sons, New York, NY 10158
6. Van Delinder, LS (Ed), 1984, *Corrosion Basics*, NACE International, Houston, TX 77084

PLANT ITEM MATERIAL SELECTION DATA SHEET

OPERATING CONDITIONS

PROCESS CORROSION DATA SHEET

Component(s) (Name/ID #) Waste feed evaporator feed vessel (FEP-VSL-00017A/B)

Facility PTF

In Black Cell? Yes

Chemicals	Unit[1]	Contract Max		Non-Routine		Notes
		Leach	No leach	Leach	No Leach	
Aluminum	g/l	9.79E+01	7.25E+01			
Chloride	g/l	4.24E+01	3.14E+01			
Fluoride	g/l	5.08E+01	3.76E+01			
Iron	g/l	2.34E+01	1.74E+01			
Nitrate	g/l	6.83E+02	5.06E+02			
Nitrite	g/l	2.34E+02	1.73E+02			
Phosphate	g/l	1.67E+02	1.23E+02			
Sulfate	g/l	9.00E+01	6.66E+01			
Mercury	g/l	9.26E-02	6.86E-02			
Carbonate	g/l	2.57E+02	1.91E+02			
Undissolved solids	wt%	4.6%	3.9%			
Other (NaMnO4, Pb,...)	g/l					
Other	g/l					
pH	N/A					Note 2
Temperature	°F					Note 3

List of Organic Species:

Notes:

1. Concentrations less than 1x 10^{-4} g/l do not need to be reported; list values to two significant digits max.
2. Receives resin flush solution(RDP09) pH approx 1.0 with reportable Cl & F, and neutralized high active effluent from PWD-VSL-00015/16 pH approx 14. RDP09 volume is small relative to the other streams but administrative controls and precautions should be taken not to transfer RDP09 to the vessel without sufficient alkaline heel present.
3. T normal operation 59 °F to 122 °F.

Assumptions:

PLANT ITEM MATERIAL SELECTION DATA SHEET

4.4.4 Waste Feed Evaporator Feed Vessel (FEP-VSL-00017A/B)

Routine Operations

Two waste feed evaporator feed vessels (FEP-VSL-00017 A/B) receive waste feed and recycles. Waste feed is transferred from the waste feed receipt vessels (FRP-VSL-00002 A/B/C/D). Recycles are routed from the plant wash and disposal vessel (PWD-VSL-00044), acidic/alkaline effluent vessels (PWD-VSL-00015 and PWD-VSL-00016), spent resin collection and dewatering process vessels (RDP-VSL-00002 A/B/C), and ultrafiltration feed preparation vessels (UFP-VSL-00001 A/B). Each feed vessel is equipped with remote sampling capability.

The feed vessels (FEP-VSL-00017 A/B) can operate by both filling and discharging at the same time or by alternating one vessel filling and the other discharging. The design basis for normal operations is to have the feed vessels alternating on 12-hour cycles (i.e., 12 hours filling, 12 hours discharging). This cycle time is based on WTP contract conditions for LAW glass production of 80 t/day (DOE 2000). Operations can vary this cycle time according to equipment availability; operator preferences for recycle management, and throughput requirements. The discharge is accomplished with a waste feed evaporator feed pump (FEP-PMP-00007 A or B) normally dedicated to one feed vessel, but with the ability to receive from either feed vessel (FEP-VSL-00017 A or B).

Each vessel is equipped with PJMs that blend and maintain solids suspension in the waste. The vessel vent system draws air into the vapor space of each vessel while removing gases to maintain the hydrogen concentration to below the lower flammability limit. Forced purge air is also supplied to the vessels. The two vessels are connected by a bi-directional overflow line that overflows to the ultimate overflow vessel (PWD-VSL-00033). For purposes of decontamination, each vessel is equipped with wash rings.

Non-Routine Operations that Could Affect Corrosion/Erosion

None identified.

PLANT ITEM MATERIAL SELECTION DATA SHEET

R10664180

FEP-VSL-00005 (PTF)

Waste Feed Evaporator Condensate Vessel

ISSUED BY
RPP-WTP PDC

- Design Temperature (°F)(max/min): 150/49
- Design Pressure (psig) (internal): 15
- Location: out cell

Contents of this document are Dangerous Waste Permit Affecting

Operating conditions are as stated on attached Process Corrosion Data Sheet

Materials Considered:

Material (UNS No.)	Relative Cost	Acceptable Material	Unacceptable Material
Carbon Steel	0.23		X
304L (S30403)	1.00		X
316L (S31603)	1.18	X	
6% Mo (N08367/N08926)	7.64	X	
Alloy 22 (N06022)	11.4	X	
Ti-2 (R50400)	10.1		X

Recommended Material: 316 (max 0.030% C; dual certified)

Recommended Corrosion Allowance: 0.040 inch (includes 0.024 inch corrosion allowance and 0.004 inch erosion allowance)

Process & Operations Limitations:

- Develop rinsing/flushing procedure for acid and water

STEVEN WAKEMAN VAIL
STATE OF WASHINGTON
39250
REGISTERED PROFESSIONAL ENGINEER
EXPIRES: 12/07/07

1/12/06

Please note that source, special nuclear and byproduct materials, as defined in the Atomic Energy Act of 1954 (AEA), are regulated at the U.S. Department of Energy (DOE) facilities exclusively by DOE acting pursuant to its AEA authority. DOE asserts, that pursuant to the AEA, it has sole and exclusive responsibility and authority to regulate source, special nuclear, and byproduct materials at DOE-owned nuclear facilities. Information contained herein on radionuclides is provided for process description purposes only.

This bound document contains a total of 6 sheets.

REV	DATE	REASON FOR REVISION	PREPARER	CHECKER	APPROVER
1	1/12/06	Issued for Permitting Use			
0	3/19/04	Issued for Permitting Use	DLA	JRD	SWV

PLANT ITEM MATERIAL SELECTION DATA SHEET

Corrosion Considerations:

The vessel receives condensate from the primary condenser

a General Corrosion
In the proposed pH operating range, no information was found for the general/uniform corrosion of stainless steels or other material. Typically, the austenitic and higher alloy steels are expected to have corrosion rates of less than about 1 mpy. This lack of data is not critical because the alloys needed for the system typically fail by pitting, crevice corrosion, or cracking. On this basis, a corrosion allowance has little meaning though a nominal value is given.

Conclusion:
Both 304L and 316L are expected to have little uniform corrosion under the stated conditions and either would be acceptable. A nominal corrosion allowance is given even though it has minimal significance.

b Pitting Corrosion
Chloride is known to cause pitting in acid and neutral solutions. Dillon (2000) is of the opinion that in alkaline solutions, at pH greater than approximately 12, chlorides are likely to promote pitting only in tight crevices. Dillon and Koch (1995) are of the opinion that fluoride will have little effect. Further, Revie (2000) and Uhlig (1948) note that nitrate inhibits chloride pitting.

The vessel has about 0.001 M nitrate and approximately 24 ppm chloride. Nominally, the temperature will be between 111 and 122 °F which, with 24 ppm chloride, is acceptable for 316L stainless steel.

Conclusion:
Localized corrosion, such as pitting, is common but can be mitigated by alloys with higher nickel and molybdenum concentrations. Based on the expected operating conditions the vessel should be 316L stainless steel.

c End Grain Corrosion
End grain corrosion only occurs in metal with exposed end grains and in highly oxidizing acid conditions.

Conclusion:
Not applicable to this system.

d Stress Corrosion Cracking
The exact amount of chloride required to cause stress corrosion cracking is unknown. In part this is because the amount varies with temperature, metal sensitization, and the environment. But it is also unknown because chloride tends to concentrate under heat transfer conditions, by evaporation, and electrochemically during a corrosion process. Hence, even as little as 10 ppm can lead to cracking under some conditions. Generally, as seen in Sedriks (1996) and Davis (1987), stress corrosion cracking does not usually occur below about 140°F.

Given the environment and the lack of heat transfer into the process stream, caustic cracking is not anticipated to be a problem.

Conclusion:
Based on the normal operating environment, the minimum alloy recommended is a 316L stainless steel.

e Crevice Corrosion
See Pitting.

Conclusion:
See Pitting

f Corrosion at Welds
Corrosion at welds is not considered a problem in the proposed environment.

Conclusion:
Weld corrosion is not considered a problem for this system.

g Microbiologically Induced Corrosion (MIC)
The proposed operating conditions on the process side are generally too warm for microbe growth. Further, because the source of the fluid is from the evaporation of a process fluid, no microbes are expected to be present.

Conclusion:
MIC is not considered a problem.

PLANT ITEM MATERIAL SELECTION DATA SHEET

h Fatigue/Corrosion Fatigue
Corrosion fatigue is not anticipated to be a problem.

Conclusions
Not expected to be a concern.

i Vapor Phase Corrosion
The vapor phase portion of the shell will be continually washed with condensing vapors.

Conclusion:
No vapor phase corrosion is anticipated.

j Erosion
Velocities are expected to be low. Erosion allowance of 0.004 inch for components with low solids content (< 2 wt%) at low velocities is based on 24590-WTP-RPT-M-04-0008.

Conclusion:
Not expected to be a concern.

k Galling of Moving Surfaces
Not applicable.

Conclusion:
Not applicable.

l Fretting/Wear
Not applicable.

Conclusion:
Not applicable.

m Galvanic Corrosion
For the environment and the proposed alloys, there is not believed to be a concern.

Conclusion:
Not expected to be a concern.

n Cavitation
None expected.

Conclusion:
Not expected to be a concern.

o Creep
The temperatures are too low to be a concern.

Conclusion:
Not applicable.

p Inadvertent Nitric Acid Addition
Higher chloride contents and higher temperatures usually require higher alloy materials. Nitrate ions inhibit the pitting and crevice corrosion of stainless alloys. Furthermore, nitric acid passivates these alloys; therefore, lower pH values brought about by increases in the nitric acid content of process fluid will not cause higher corrosion rates for these alloys. The upset condition that was most likely to occur is lowering of the pH of the vessel content by inadvertent addition of 0.5 M nitric acid. Lowering of pH may make a chloride-containing solution more likely to cause pitting of stainless alloys. Increasing the nitric acid content of the process fluid adds more of the pitting-inhibiting nitrate ion to the process fluid. In addition, adding the nitric acid solution to the stream will dilute the chloride content of the process fluid.

Conclusion:
The recommended materials will be able to withstand a plausible inadvertent addition of 0.5 M nitric acid for a limited period.

PLANT ITEM MATERIAL SELECTION DATA SHEET

References:

1. 24590-WTP-RPT-M-04-0008, Rev. 2, *Evaluation of Stainless Steel Wear Rates In WTP Waste Streams At Low Velocities*
2. 24590-WTP-RPT-PR-04-0001, Rev. B, *WTP Process Corrosion Data*
3. CCN 130172, Divine, JR, 1986, Letter to A.J. Diliberto, *Reports of Experimentation*, Battelle, Pacific Northwest Laboratories, Richland, WA 99352
4. CCN 130173, Dillon, CP (Nickel Development Institute), Personal Communication to J R Divine (ChemMet, Ltd., PC), 3 Feb 2000.
5. Davis, JR (Ed), 1987, *Corrosion, Vol 13*, In "Metals Handbook", ASM International, Metals Park, OH 44073
6. Koch, GH, 1995, *Localized Corrosion in Halides Other Than Chlorides*, MTI Pub No. 41, Materials Technology Institute of the Chemical Process Industries, Inc, St Louis, MO 63141
7. Revie, WW, 2000. Uhlig's Corrosion Handbook, 2nd Edition, Wiley-Interscience, New York, NY 10158
8. Sedriks, AJ, 1996, *Corrosion of Stainless Steels*, John Wiley & Sons, Inc., New York, NY 10158
9. Uhlig, HH, 1948, *Corrosion Handbook*, John Wiley & Sons, New York, NY 10158

Bibliography:

1. CCN 130170, Blackburn, LD to PG Johnson, Internal Memo, Westinghouse Hanford Co, *Evaluation of 240-AR Chloride Limit*, August 15, 1991.
2. CCN 130171, Ohl, PC to PG Johnson, Internal Memo, Westinghouse Hanford Co, *Technical Bases for Cl- and pH Limits for Liquid Waste Tank Cars*, MA: PCO:90/01, January 16, 1990.
3. Agarwal, DC, *Nickel and Nickel alloys*, In: Revie, WW, 2000. *Uhlig's Corrosion Handbook*, 2nd Edition, Wiley-Interscience, New York, NY 10158
4. Danielson, MJ & SG Pitman, 2000, *Corrosion Tests of 316L and Hastelloy C-22 in Simulated Tank Waste Solutions*, PNWD-3015 (BNFL-RPT-019, Rev 0), Pacific Northwest Laboratory, Richland WA.
5. Davis, JR (Ed), 1994, *Stainless Steels*, In ASM Metals Handbook, ASM International, Metals Park, OH 44073
6. Hamner, NE, 1981, *Corrosion Data Survey*, Metals Section, 5th Ed, NACE International, Houston, TX
7. Jones, RH (Ed.), 1992, *Stress-Corrosion Cracking*, ASM International, Metals Park, OH 44073
8. Phull, BS, WL Mathay, & RW Ross, 2000, *Corrosion Resistance of Duplex and 4-6% Mo-Containing Stainless Steels i FGD Scrubber Absorber Slurry Environments*, Presented at Corrosion 2000, Orlando, FL, March 26-31, 2000, NACE International, Houston TX 77218.
9. Van Delinder, LS (Ed), 1984, *Corrosion Basics*, NACE International, Houston, TX 77084
10. Zapp, PE, 1998, *Preliminary Assessment of Evaporator Materials of Construction*, BNF—003-98-0029, Rev 0, Westinghouse Savannah River Co., Inc for BNFL Inc.

PLANT ITEM MATERIAL SELECTION DATA SHEET

24590-WTP-RPT-PR-04-0001, Rev. B
WTP Process Corrosion Data

PROCESS CORROSION DATA SHEET

Component(s) (Name/ID #) Waste feed evaporator condensate vessel (FEP-VSL-00005)

Facility PTF

In Black Cell? No

Chemicals	Unit[1]	Contract Max		Non-Routine		Notes
		Leach	No leach	Leach	No Leach	
Aluminum	g/l	1.94E-02	1.86E-02			
Chloride	g/l	2.17E-02	2.46E-02			
Fluoride	g/l	5.58E-04	6.36E-04			
Iron	g/l	2.16E-03	2.30E-03			
Nitrate	g/l	3.64E-01	4.01E-01			
Nitrite	g/l	2.57E-02	2.93E-02			
Phosphate	g/l	4.48E-02	4.99E-02			
Sulfate	g/l	1.69E-02	1.93E-02			
Mercury	g/l					
Carbonate	g/l	7.88E-02	8.42E-02			
Undissolved solids	wt%					
Other (NaMnO4, Pb,...)	g/l					
Other	g/l					
pH	N/A					Note 3
Temperature	°F					Note 2

List of Organic Species:

References

System Description: 24590-PTF-3YD-FEP-00001, Rev 0
Mass Balance Document: 24590-WTP-RPT-PR-04-0001, Rev A
Normal Input Stream #: FEP08, FEP12
Off Normal Input Stream # (e.g., overflow from other vessels): N/A
P&ID: N/A
PFD: 24590-PTF-M5-V17T-P0004001, Rev 0
Technical Reports: N/A

Notes:

1. Concentrations less than 1x 10^{-4} g/l do not need to be reported; list values to two significant digits max.
2. Tnormal operation 111 °F to 122 °F (24590-PTF-MEC-FEP-00001, Rev B)
3. pH approx 10 to 11

Assumptions:

PLANT ITEM MATERIAL SELECTION DATA SHEET

4.4.3 Waste Feed Evaporator Condensate Vessel (FEP-VSL-00005)

Routine Operations

The condensate draining from the primary condenser is monitored for radioactivity. The area radiation monitor is located close to the condenser outlet to allow a time lag before the condensate can reach the condensate vessel (FEP-VSL-00005). This is to minimize the possibility that contaminated condensate can be transferred to the radioactive liquid waste disposal system (RLD). As the condensate vessel fills, the waste feed evaporator condensate pump (FEP-PMP-00006A/B) recirculates condensate continuously back to the vessel with a portion recycled to the SEP vessel for spraying the demister pads.

Non-Routine Operations that Could Affect Corrosion/Erosion

None identified.

PLANT ITEM MATERIAL SELECTION DATA SHEET

R10464131

ISSUED BY
RPP-WTP PDC

FEP-SEP-00001A/B (PTF)
Waste Feed Evaporator Separator Vessels

- Design Temperature (max/min) (°F): 175/49
- Design Pressure (psig) (internal/external): 50/14.7
- Location: incell

Contents of this document are Dangerous Waste Permit affecting

Operating conditions are as stated on sheets 5 and 6

Cannot be maintained nor replaced during the 40 y design life. No method of totally removing solids or heels is present.

Operating Modes Considered:

- The vessel is always alkaline, pH 13, at the normal operating temperature.
- The vessel will be cleaned using 2 N HNO_3 with residual chlorides and fluorides at normal operating temperatures; the condition of high temperature and acid is not examined.

Materials Considered:

Material (UNS No.)	Relative Cost	Acceptable Material	Unacceptable Material
Carbon Steel	0.23		X
304L (S30403)	1.00	X	
316L (S31603)	1.18	X	
6% Mo (N08367/N08926)	7.64	X	
Alloy 22 (N06022)	11.4	X	
Ti-2 (R50400)	10.1		X

Recommended Material: 304 (max 0.030% C; dual certified)

Recommended Corrosion Allowance: 0.04 inch (includes 0.00 inch erosion allowance)

Process & Operations Limitations:

- Develop rinsing/flushing procedure for acid and water

STEVEN WAKEMAN VAIL
STATE OF WASHINGTON
39250
REGISTERED
PROFESSIONAL ENGINEER

12/23/04

EXPIRES: 12/07/05

Please note that source, special nuclear and byproduct materials, as defined in the Atomic Energy Act of 1954 (AEA), are regulated at the U.S. Department of Energy (DOE) facilities exclusively by DOE acting pursuant to its AEA authority. DOE asserts, that pursuant to the AEA, it has sole and exclusive responsibility and authority to regulate source, special nuclear, and byproduct materials at DOE-owned nuclear facilities. Information contained herein on radionuclides is provided for process description purposes only.

This bound document contains a total of 6 sheets.

REV	DATE	REASON FOR REVISION	PREPARER	CHECKER	APPROVER
1	4/16/09	Issued for Permitting Use			
0	3/18	Issued for Permitting Use	DLA	JRD	SWV

PLANT ITEM MATERIAL SELECTION DATA SHEET

Corrosion Considerations:

a General Corrosion
Hamner's data (1981) lists a corrosion rate for 304 (and 304L) in NaOH of less than 20 mpy (500 μm/y) at 77°F and over 20 mpy at 122°F. He shows 316 (and 316L) has a rate of less than 2 mpy up to 122°F and 50% NaOH. Sedriks (1996) states that the 300 series stainless steels are acceptable in up to 50% NaOH at temperatures up to about 122°F or slightly above. Work with simulated-radwaste evaporators, six months at 140°F, showed 304L was slightly more resistant to corrosion (<0.2 mpy) than was 316L (<0.6 mpy). Ni 200, pure nickel, was much less resistant (≈7 mpy) probably due to the complexants present in the waste.

Davis (1994) states the corrosion rate for 304L in pure NaOH will be less than about 1 mpy up to about 212°F though Sedriks states the data beyond about 122°F are incorrect. Danielson & Pitman (2000), based on short term studies, suggest a corrosion rate of about 0.5 mpy for 316L in simulated waste at boiling, >212°F.

In review of the 242-A Evaporator in waste similar to that expected in LAW, it was found that the corrosion of 304L after about two years of operation at 140°F was less than the accepted variability of the plate. Because of uncertainties in the starting thickness of the metal, a review of the raw data was inconclusive.

Uhlig (1948) has shown that pure nickel is resistant to corrosion by NaOH. However, the presence of complexing agents may reverse the trend. Agarwal (2000) states that the higher nickel alloys are highly corrosion resistant though specific mention of alkaline media is not made. The general literature mainly discusses cracking problems (see below) rather than uniform corrosion.

The Savannah River evaporator vessels are made of 304L and have suffered no failures in about 30 years.

Conclusion:
Based on uniform corrosion and operating within the defined temperature limits, Savannah River experience and the testing, 304L would be satisfactory.

b Pitting Corrosion
Chloride is notorious for causing pitting in acid and neutral solutions. It is thought that in alkaline solutions, pH>12, chlorides are likely to promote pitting only in tight crevices. Koch (1995) is of the opinion that fluoride will have little effect.

Revie (2000) and Uhlig (1948) note that nitrate inhibits chloride corrosion. Therefore the high nitrate concentrations in the LAW are expected to be beneficial.

The apparent lack of pitting in the 242-A Evaporator suggests 304L is acceptable at the design conditions. Other studies confirm the good behavior of 304L when it is not a heat transfer surface; the SRS evaporator shell has been in existence for over 30 years.

Rinsing is expected to be sufficiently infrequent as to mandate the better operational behavior of 304L compared to 316L.

Conclusion:
Localized corrosion appears to be relatively minor in alkaline solutions except under heat transfer conditions or where deposits can form. As long as the temperatures remain in the normal operating range, ≤140 °F and the surfaces are not used for heat transfer, 304L is satisfactory.

c End Grain Corrosion
End grain corrosion only occurs in metal with exposed end grains and in highly oxidizing acid conditions.

Conclusion: Not applicable to this system.

d Stress Corrosion Cracking
The exact amount of chloride required to stress corrosion crack stainless steel is unknown. In part this is because the amount varies with temperature, metal sensitization, and the environment. But it is also unknown because chloride tends to concentrate under heat transfer conditions, by evaporation, and electrochemically during a corrosion process. Hence, even as little as 10 ppm can lead to cracking under some conditions. Generally, as seen in Sedriks (1996) and Davis (1987), stress corrosion cracking does not usually occur below about 140°F. Further, the use of "L" grade stainless reduces the opportunity for sensitization. From the above references, it also observed that alkaline conditions reduce the probability of the initiation of stress corrosion cracking to essentially zero. However, should a pit or crevice, including a deposit, be present where the environment can become acid, then the alkaline environment will no longer have an effect.

Caustic cracking tends to occur above 140 °F according to Sedriks or above 212 °F according to other work. Because the maximum operating temperature is < 140°F, all sources suggest caustic cracking should be minimal. Data from the Savannah River Site evaporators suggests cracking is not a concern in waste even to the design temperature.

Conclusion:
The use of 304L is expected to be acceptable for the vessel during operation.

e Crevice Corrosion
The comments on Pitting are equally valid here.

Conclusion:
The Pitting conclusions are valid.

PLANT ITEM MATERIAL SELECTION DATA SHEET

f Corrosion at Welds
Weld corrosion other than pitting or crevice corrosion is not considered a problem in the proposed environment.

Conclusion:
Weld corrosion is not considered a problem for this system.

g Microbiologically Induced Corrosion (MIC)
MIC is normally observed at lower pH conditions and temperatures. Although microbes can live at very low pH, and probably high pH, as well as at 572°F, no reports of MIC in the proposed conditions have been reported.

Conclusion:
MIC is not considered a problem.

h Fatigue/Corrosion Fatigue
Corrosion fatigue is a not expected to be a problem in these vessels.

Conclusions
Not expected to be a concern.

i Vapor Phase Corrosion
The vapor phase portion of the tank will be continually washed with condensing vapors while also being spattered with caustic.

Conclusion:
No vapor phase corrosion is anticipated.

j Erosion
Velocities within the vessel are expected to be sufficiently low in the recirculation system that erosion is not expected to occur.

Conclusion:
Not expected to be a concern.

k Galling of Moving Surfaces
Not applicable.

Conclusion:.
Not applicable.

l Fretting/Wear
Not applicable.

Conclusion:
Not applicable.

m Galvanic Corrosion
Not applicable.

Conclusion:
Not applicable.

n Cavitation
Not applicable.

Conclusion:
Not applicable.

o Creep
Not applicable.

Conclusion:
Not applicable.

p Inadvertent Nitric Acid Addition
Higher chloride contents and higher temperatures usually require higher alloy materials. Nitrate ions inhibit the pitting and crevice corrosion of stainless alloys. Furthermore, nitric acid passivates these alloys; therefore, lower pH values brought about by increases in the nitric acid content of process fluid will not cause higher corrosion rates for these alloys. The upset condition that was most likely to occur is lowering of the pH of the vessel content by inadvertent addition of 0.5 M nitric acid. Lowering of pH may make a chloride-containing solution more likely to cause pitting of stainless alloys. Increasing the nitric acid content of the process fluid adds more of the pitting-inhibiting nitrate ion to the process fluid. In addition, adding the nitric acid solution to the stream will dilute the chloride content of the process fluid.

Conclusion:
The recommended materials will be able to withstand a plausible inadvertent addition of 0.5 M nitric acid.

PLANT ITEM MATERIAL SELECTION DATA SHEET

References:

1. Agarwal, DC, *Nickel and Nickel alloys*, In: Revie, WW, 2000. *Uhlig's Corrosion Handbook*, 2nd Edition, Wiley-Interscience, New York, NY 10158
2. Danielson, MJ & SG Pitman, 2000, *Corrosion Tests of 316L and Hastelloy C-22 in Simulated Tank Waste Solutions*, PNWD-3015 (BNFL-RPT-019, Rev 0), Pacific Northwest Laboratory, Richland WA.
3. Davis, JR (Ed), 1987, *Corrosion, Vol 13*, In "Metals Handbook", ASM International, Metals Park, OH 44073
4. Davis, JR, 1994, *Stainless Steels*, In ASM Metals Handbook, ASM International, Metals Park, OH 44073
5. Hamner, NE, 1981, *Corrosion Data Survey*, Metals Section, 5th Ed, NACE International, Houston, TX
6. Koch, GH, 1995, *Localized Corrosion in Halides Other Than Chlorides*, MTI Pub No. 41, Materials Technology Institute of the Chemical Process Industries, Inc, St Louis, MO 63141
7. Revie, WW, 2000. *Uhlig's Corrosion Handbook*, 2nd Edition, Wiley-Interscience, New York, NY 10158
8. Sedriks, AJ, 1996, *Corrosion of Stainless Steels*, John Wiley & Sons, Inc., New York, NY 10158
9. Uhlig, HH, 1948, *Corrosion Handbook*, John Wiley & Sons, New York, NY 10158

Bibliography:

1. Jenkins, CF, 1998, *Performance of Evaporators in High Level Radioactive Chemical Waste Service*, Presented at Corrosion 98, NACE International, Houston TX 77084
2. Jones, RH (Ed.), 1992, *Stress-Corrosion Cracking*, ASM International, Metals Park, OH 44073
3. Smith, HD and MR Elmore, 1992, *Corrosion Studies of Carbon Steel under Impinging Jets of Simulated Slurries of Neutralized Current Acid Waste (NCAW) and Neutralized Cladding Removal Waste (NCRW)*, PNL-7816, Pacific Northwest Laboratory, Richland, Washington.
4. Van Delinder, LS (Ed), 1984, *Corrosion Basics*, NACE International, Houston, TX 77084

PLANT ITEM MATERIAL SELECTION DATA SHEET

OPERATING CONDITIONS

PROCESS CORROSION DATA SHEET

Component(s) (Name/ID #) Waste feed evaporator separator vessel (FEP-SEP-00001A/B)

Facility PTF

In Black Cell? Yes

Chemicals	Unit[1]	Contract Max		Non-Routine		Notes
		Leach	No leach	Leach	No Leach	
Aluminum	g/l	7.25E+01	6.91E+01			
Chloride	g/l	2.65E+01	2.93E+01			
Fluoride	g/l	3.14E+01	3.49E+01			
Iron	g/l	1.62E+01	1.70E+01			
Nitrate	g/l	4.96E+02	5.34E+02			
Nitrite	g/l	1.44E+02	1.60E+02			
Phosphate	g/l	1.06E+02	1.15E+02			
Sulfate	g/l	5.56E+01	6.17E+01			
Mercury	g/l	5.66E-01	3.53E-01			
Carbonate	g/l	1.92E+02	2.01E+02			
Undissolved solids	wt%	3.0%	3.4%			Note 4
Other (NaMnO4, Pb,...)	g/l					
Other	g/l					
pH	N/A					Note 3
Temperature	°F					Note 2

List of Organic Species:

Notes:

1. Concentrations less than 1x 10^{-4} g/l do not need to be reported; list values to two significant digits max.
2. Toperation 77 °F to 122 °F.
   boiling occurs at approximately 122 °F since the evaporator vessels are under vacuum.
3. pH approximately 13 to 14
4. Fluid in reboiler loop could contains solids as high as 8.9 wt%.

Assumptions:

PLANT ITEM MATERIAL SELECTION DATA SHEET

4.4.2 Waste Feed Evaporator Separator Vessel (FEP-SEP-00001A/B)

Routine Operations

The FEP system contains two evaporator trains of the same capacity. Although the evaporator trains can operate simultaneously (each contains independent control logic), a single evaporator train has sufficient capacity to support the maximum production requirements of LAW and HLW glass. The evaporator product will have a liquid specific gravity of approximately 1.27, which corresponds to a Na concentration of 5 M, in order to optimize the operation of downstream processes, particularly the cesium ion exchange process system (CXP) and UFP system.

Solids within the evaporator recirculation loop are maintained in a suspended state by the waste feed evaporator recirculation pump (FEP-PMP-00009A or B). This pump recirculates waste at a high volumetric flowrate to limit fluid temperature rise when passing through the reboiler and subsequent flash evaporation. The evaporator feed pumps have variable speed drives. Separator vessel level is used to control feed rate to the evaporator. An increasing level in the separator vessel causes a decrease in feed rate while a decreasing level causes an increase in feed rate. At steady state, however, a relatively constant feed rate is maintained at an established boil-off rate. The buildup of solids on the separator vessel wall above the liquid level will be mitigated by an intermittent spray of recycled condensate.

Foaming tendencies in the separator vessel can be detected by elevations in pressure drop across the demister pads. Foaming in the separator vessel will be minimized by the addition of an antifoam agent from AFR-TK-00001. This addition is expected to be part of normal operations.

Non-Routine Operations that Could Affect Corrosion/Erosion

None identified.

R10272846

24590-PTF-N1D-FEP-P0008
Rev. 0

PLANT ITEM MATERIAL SELECTION DATA SHEET

FEP-RBLR-00001A/B (PTF)
Waste Feed Evaporator Reboilers

- Design Temperature (°F)(max/min): 311/49
- Design Pressure (psig) (max/min) 50/FV
- Location: incell

ISSUED BY
PP-WTP PDC
3/19/04
INIT DATE

Contents of this document are Dangerous Waste Permit affecting

Operating conditions are as stated on sheet 5

Operating Modes Considered:

- pH 13; halide concentrations similar to FEP-SEP-00001-A/B; operating temperature 140°F

Materials Considered:

Material (UNS No.)	Relative Cost	Acceptable Material	Unacceptable Material
Carbon Steel	0.23		X
304L (S30403)	1.00	X	
316L (S31603)	1.18	X	
6% Mo (N08367/N08926)	7.64	X	
Alloy 22 (N06022)	11.4	X	
Ti-2 (R50400)	10.1		X

Recommended Material: Shell: 304 (max 0.030%C; dual certified)
Tubes: G-30 or equivalent

Recommended Corrosion Allowance: none on shell side
0.04 inch on tube side

Process & Operations Limitations:

- Develop flushing/rinsing procedure for acid or water

STEVEN WAKEMAN VAIL
STATE OF WASHINGTON
39250
REGISTERED
PROFESSIONAL ENGINEER
3/19/04
EXPIRES: 12/07/05

Please note that source, special nuclear and byproduct materials, as defined in the Atomic Energy Act of 1954 (AEA), are regulated at the U.S Department of Energy (DOE) facilities exclusively by DOE acting pursuant to its AEA authority. DOE asserts, that pursuant to the AEA, it has sole and exclusive responsibility and authority to regulate source, special nuclear, and byproduct materials at DOE-owned nuclear facilities. Information contained herein on radionuclides is provided for process description purposes only.

This bound document contains a total of 5 sheets.

REV	DATE	REASON FOR REVISION	PREPARER	CHECKER	APPROVER
0	3/19/04	Issued for Permitting Use			

PLANT ITEM MATERIAL SELECTION DATA SHEET

Corrosion Considerations:

a General Corrosion
Hamner's data (1981) lists a corrosion rate for 304 (and 304L) in NaOH of less than 20 mpy (500 μm/y) at 77°F and over 20 mpy at 122°F He shows 316 (and 316L) has a rate of less than 2 mpy up to 122°F and 50% NaOH. Sedriks (1996) states that the 300 series stainless steels are acceptable in up to 50% NaOH at temperatures up to about 122°F or slightly above. Work with simulated-radwaste evaporators, six months at 140°F, showed 304L was slightly more resistant to corrosion (<0.2 mpy) than was 316L (<0.6 mpy). Ni 200, pure nickel, was much less resistant (≈7 mpy) probably due to the complexants.

Davis (1994) states the corrosion rate for 304L in pure NaOH will be less than about 0 1 mpy up to about 212°F though Sedriks states the data above 122°F are incorrect Danielson & Pitman, (2000) based on short-term studies, suggest a corrosion rate of about 0.5 mpy for 316L in simulated waste at boiling.

Ohl & Carlos (1994) found in their review of the 242-A Evaporator with waste similar to that expected in LAW that the corrosion of 304L was less than the accepted variability of the plate thickness after two years of operation at 140°F. Because of uncertainties of the starting wall thickness, a review of the raw data was inconclusive. 304L appears have corroded at an average rate of about 10 mpy though it may have been higher or lower

Uhlig (1948) has shown that pure nickel is more resistant to corrosion by NaOH than stainless steel However, the presence of complexing agents may reverse the trend. Agarwal (2000) states that the higher nickel alloys are highly corrosion resistant though specific mention of alkaline media is not made. The general literature mainly discusses cracking problems (see below) rather than uniform corrosion.

Zapp (1998) notes that the evaporator vessels at Savannah River Site are made of 304L and have suffered no failures in over 30 years of operation. Savannah River uses G-3 and G-30 alloys for the evaporator tubes.

Conclusion. For the shell, it appears that 304L can be used at temperatures up to the stated operating temperature.

Based on testing, 304L would be satisfactory for the tubes. However, if it is assumed the temperature can approach low pressure steam temperatures, then, based on Savannah River data, a higher alloy is recommended for the tubes. Some of the data described above suggest that a high chromium and perhaps molybdenum content will be needed. G-30 alloy, based on the current Savannah River experience, can be selected.

b Pitting Corrosion
Chloride is notorious for causing pitting in acid and neutral solutions. It is found that in alkaline solutions, pH>12, chlorides are likely to promote pitting only in tight crevices. Koch (1995) is of the opinion that fluoride will have little effect. Jenkins (1998) has stated that localized corrosion can occur under the deposits on tubes, probably due to the chlorides.

Revie (2000) and Uhlig (1948) note that nitrate inhibits chloride corrosion. Therefore the high nitrate concentrations in the LAW are expected to be beneficial.

The apparent lack of pitting in the 242-A Evaporator suggests 304L is acceptable at the design conditions. Zapp (1998) confirms the behavior of 304L in the shell. Use of austenitic alloys is not recommended for the tubes.

The higher nickel and molybdenum alloys, such as AL6XN, C-22, G-30, are expected to be more pitting resistant than the austenitic alloys. Because high purity nickel, Ni 200, did not fare well in tests in the presence of complexants, but the chromium content of the alloys may mitigate that effect. Jenkins (1998) reports that G3 and G30 evaporator tubes have used successfully at Savannah River Site for over 10 years and they expect at least 20 years service; 304L had failed after about 10 years. The shell of the evaporator has performed successfully for approximately 30 years.

Conclusion: Localized corrosion, such as pitting, is common but probably can be mitigated by alloys with higher nickel and molybdenum contents even under heat transfer conditions or where deposits can form. Based on Savannah River data, the shell is expected to be free of significant corrosion and can be 304L.

c End Grain Corrosion
End grain corrosion only occurs in metal with exposed end grains and in highly oxidizing acid conditions

Conclusion: Not applicable to this system

d Stress Corrosion Cracking
The exact amount of chloride required to stress corrosion crack stainless steel is unknown. In part this is because the amount varies with temperature, metal sensitization, and the environment. But it is also unknown because chloride tends to concentrate under heat transfer conditions, by evaporation, and electrochemically during a corrosion process. Hence, even as little as 10 ppm can lead to cracking under some conditions. The use of "L" grade stainless reduces the opportunity for sensitization. From the above references, it is also observed that alkaline conditions reduce the probability of the initiation of stress corrosion cracking to essentially zero. However, should a pit or crevice, including a deposit, be present where the environment can become acid, then the alkaline environment will no longer have an effect and stress corrosion can occur.

Conclusion: The use of 304L is expected to be acceptable for the shell. The tubes should be a higher alloy, such as G-30.

PLANT ITEM MATERIAL SELECTION DATA SHEET

e Crevice Corrosion
See Pitting.

Conclusion: See Pitting

f Corrosion at Welds
Weld corrosion other than pitting or crevice corrosion is not considered a problem in the proposed environment

Conclusion: Weld corrosion is not considered a problem.

g Microbiologically Induced Corrosion (MIC)
MIC is normally observed at lower pH conditions and temperatures. Although microbes can live at very low pH, and probably high pH, as well as at 572°F and in radiation fields, no reports of MIC in the proposed conditions have been reported.

Conclusion MIC is not considered a problem.

h Fatigue/Corrosion Fatigue
Corrosion fatigue is not a problem particularly in a properly designed unit.

Conclusion: Not considered a problem

i Vapor Phase Corrosion
The vapor phase portion of the tank will be continually washed with condensing vapors and periodically sprayed with wash water via the vessel wash rings while also being spattered with caustic.

Conclusion: Based on Zapp's work (1998), no vapor phase corrosion is anticipated.

j Erosion
Velocities within the evaporator are expected to be low.

Conclusion: Not a concern

k Galling of Moving Surfaces
Not applicable

Conclusion: Not applicable.

l Fretting/Wear
Not anticipated to be a problem.

Conclusion: Not expected to be a concern.

m Galvanic Corrosion
For the environment and the proposed alloys, there is not believed to be a concern.

Conclusion: Not a concern

n Cavitation
Not applicable.

Conclusion: Not applicable.

o Creep
Even though the system is designed for temperatures up to 311 °F, the temperatures are sufficiently low for the given pressures to not be a concern.

Conclusion: Not applicable.

PLANT ITEM MATERIAL SELECTION DATA SHEET

References:

1 Agarwal, DC, *Nickel and Nickel alloys*, In Revie, WW, 2000. *Uhlig's Corrosion Handbook*, 2nd Edition, Wiley-Interscience, New York, NY 10158
2. Danielson, MJ & SG Pitman, 2000, *Corrosion Tests of 316L and Hastelloy C-22 in Simulated Tank Waste Solutions*, PNWD-3015 (BNFL-RPT-019, Rev 0), Pacific Northwest Laboratory, Richland WA.
3. Davis, JR (Ed), 1994, *Stainless Steels*, In ASM Metals Handbook, ASM International, Metals Park, OH 44073
4. Hamner, NE, 1981, *Corrosion Data Survey*, Metals Section, 5th Ed, NACE International, Houston, TX
5. Jenkins, CF, 1998, *Performance of Evaporators in High Level Radioactive Chemical Waste Service*, Presented at Corrosion 98, NACE International, Houston TX 77084
6. Koch, GH, 1995, *Localized Corrosion in Halides Other Than Chlorides*, MTI Pub No. 41, Materials Technology Institute of the Chemical Process Industries, Inc, St Louis, MO 63141
7. Ohl, PC & WC Carlos, 1994, *Hanford High-Level Evaporator/Crystallizer Corrosion Evaluation*, WHC-SA-1983-FP, Westinghouse Hanford Co , Richland, WA 99352
8. Revie, WW, 2000 *Uhlig's Corrosion Handbook*, 2nd Edition, Wiley-Interscience, New York, NY 10158
9. Sedriks, AJ, 1996, *Corrosion of Stainless Steels*, John Wiley & Sons, Inc., New York, NY 10158
10 Uhlig, HH, 1948, *Corrosion Handbook*, John Wiley & Sons, New York, NY 10158
11 Zapp, PE, 1998, *Preliminary Assessment of Evaporator Materials of Construction*, BNF—003-98-0029, Rev 0, Westinghouse Savannah River Co., Inc for BNFL Inc

Bibliography:

1. Davis, JR (Ed), 1987, *Corrosion, Vol 13*, In "Metals Handbook", ASM International, Metals Park, OH 44073
2. Jones, RH (Ed.), 1992, *Stress-Corrosion Cracking*, ASM International, Metals Park, OH 44073
3. Smith, HD and MR Elmore, 1992, *Corrosion Studies of Carbon Steel under Impinging Jets of Simulated Slurries of Neutralized Current Acid Waste (NCAW) and Neutralized Cladding Removal Waste (NCRW)*, PNL-7816, Pacific Northwest Laboratory, Richland, Washington.
4. Van Delinder, LS (Ed), 1984, *Corrosion Basics*, NACE International, Houston, TX 77084

PLANT ITEM MATERIAL SELECTION DATA SHEET
OPERATING CONDITIONS

Materials Selection Data

Material Selection Data Sheets for
The Pretreatment Facility

Component (Name/ID) FEP-RBLR-00001 A/B
System FEP

Operations

Chemicals	Unit	Cold Startup	Normal Operation*	Standby/Idle	Cleaning	Accident
Aluminum	g/l	N/A	3.0E+01	N/A	N/A	N/A
Chloride	g/l		5.6E+00			
Fluoride	g/l		7.9E+00			
Hydroxide	g/l		2.6E+00			
Iron	g/l		6.4E+00			
Nitrate	g/l		7.8E+01			
Nitrite	g/l		2.3E+02			
Phosphate	g/l		1.5E+01			
TOC[φ]	g/l		2.6E+01			
Sulfate	g/l		4.0E+00			
Undissolved solids	g/l		4.0E+01			
Particle size/hardness	µm (##)		N/A			
Other (Hg)	g/l		3.4E-01			
Carbonate	g/l		5.0E+00			
pH	-		1.3E+01			
Dose rate, α, β/γ	Rad		N/A			
Temperature	°F		1.4E+02			
Velocity	fps		N/A			
Vibration			N/A			
Time of exposure	#		1.0E+02			

* Based on Contract Maximum Chemical A/D run at 60/6

- % of total; ## - use Mho scale

Assumptions:

Remarks: Stream FEP03

Comments: 2M HNO3 During Cleaning of Separator and Reboiler

[X] Black Cell

[X] Flushing

φ List expected organic species: N/A
Use maximum of 2 significant figures

N/A = Information not available or not in Process Engineering Scope

R10272847

24590-PTF-N1D-FEP-P0009
Rev. 0

PLANT ITEM MATERIAL SELECTION DATA SHEET

FEP-COND-00002A/B (PTF)
Waste Feed Evaporator Intercondensers

- Design Temperature (°F)(max/min): 250/49
- Design Pressure (psig) (max/min): Shell side 50/FV; Tube side 100/FV
- Location: incell

ISSUED BY
RPP-WTP PDC
3/19/04
INIT DATE

Contents of this document are Dangerous Waste Permit Affecting

Operating conditions are as stated on sheet 5

Operating Modes Considered:

- pH ≈7, temperature up to 250°F

Materials Considered:

Material (UNS No.)	Relative Cost	Acceptable Material	Unacceptable Material
Carbon Steel	0.23		X
304L (S30403)	1.00		X
316L (S31603)	1.18	X	
6% Mo (N08367/N08926)	7.64	X	
Alloy 22 (N06022)	11.4	X	
Ti-2 (R50400)	10.1		X

Recommended Material: 316 (max 0.030% C; dual certified)

Recommended Corrosion Allowance: 0.04 inch

Process & Operations Limitations:

- none

STEVEN WAKEMAN VAIL
STATE OF WASHINGTON
39250
REGISTERED PROFESSIONAL ENGINEER
EXPIRES: 12/07/05
3/19/04

Please note that source, special nuclear and byproduct materials, as defined in the Atomic Energy Act of 1954 (AEA), are regulated at the U.S. Department of Energy (DOE) facilities exclusively by DOE acting pursuant to its AEA authority. DOE asserts, that pursuant to the AEA, it has sole and exclusive responsibility and authority to regulate source, special nuclear, and byproduct materials at DOE-owned nuclear facilities. Information contained herein on radionuclides is provided for process description purposes only.

This bound document contains a total of 5 sheets.

REV	DATE	REASON FOR REVISION	PREPARER	CHECKER	APPROVER
0	3/19/04	Issued for Permitting Use			SWVail

PLANT ITEM MATERIAL SELECTION DATA SHEET

Corrosion Considerations:

a General Corrosion
In the proposed pH operating range, no information was found for the general/uniform corrosion of stainless steels or other material. Typically, the austenitic and higher alloy steels are expected to have corrosion rates of less than about 1 mpy. This lack of data is not critical because the alloys needed for the system typically fail by pitting, crevice corrosion, or cracking. On this basis, a corrosion allowance has little meaning though a nominal value is given.

Conclusion:
Little uniform corrosion is expected, even under accident conditions. A nominal corrosion allowance is given even though it has minimal significance.

b Pitting Corrosion
Chloride is known to cause pitting in acid and neutral solutions. It is thought that in alkaline solutions, pH>12, chlorides are likely to promote pitting only in tight crevices Koch (1995) is of the opinion that fluoride will have little effect. Jenkins (1998) has stated that localized corrosion can occur under the deposits on tubes, probably due to the chlorides. Further, Revie (2000) and Uhlig (1948) note that nitrates inhibit chloride pitting.

The condensers have concentrations of less than 0.002 ppm chloride and pH in the range of 6-8 rather than above 12. At the stated temperatures with low halides, 316L stainless steel is recommended.

Conclusion:
Based on the expected operating conditions the vessel should be 316L stainless steel.

c End Grain Corrosion
End grain corrosion only occurs in metal with exposed end grains and in highly oxidizing acid conditions.

Conclusion: Not applicable to this system.

d Stress Corrosion Cracking
The exact amount of chloride required to cause stress corrosion cracking is unknown. In part this is because the amount varies with temperature, metal sensitization, and the environment. But it is also unknown because chloride tends to concentrate under heat transfer conditions, by evaporation, and electrochemically during a corrosion process. Hence, even as little as 10 ppm can lead to cracking under some conditions. The proposed operating conditions provide a possible stress corrosion cracking environment. However, 304L and 316L are less susceptible to cracking compared to 304 and 316. Under the stated conditions, 316L is considered acceptable.

Given the environment and the lack of heat transfer into the process stream, caustic cracking is not anticipated to be a problem.

Conclusion.
Because of the normal operating environment, the minimum alloy recommended is a 316L stainless steel.

e Crevice Corrosion
See Pitting.

Conclusion:
See Pitting

f Corrosion at Welds
Other than pitting or crevice corrosion, corrosion at welds is not considered a problem in the proposed environment.

Conclusion:
Weld corrosion is not considered a problem for this system.

g Microbiologically Induced Corrosion (MIC)
The proposed operating conditions on the process side are acceptable for microbe growth. Because, however, the source of the stream is from the evaporation of a process fluid, no microbes are expected to be present.

Conclusion:
MIC is not considered a problem.

PLANT ITEM MATERIAL SELECTION DATA SHEET

h Fatigue/Corrosion Fatigue
Corrosion fatigue should not be a problem.

Conclusions
Not expected to be a concern.

i Vapor Phase Corrosion
The vapor phase portion of the shell will be continually washed with condensing vapors.

Conclusion:
No vapor phase corrosion is anticipated.

j Erosion
Velocities within the condenser are expected to be low.

Conclusion:
Not a concern

k Galling of Moving Surfaces
Not applicable.

Conclusion:
Not applicable.

l Fretting/Wear
Not expected to be applicable.

Conclusion:
Not applicable.

m Galvanic Corrosion
For the environment and the proposed alloys, there is not believed to be a concern.

Conclusion:
Not believed to be of concern.

n Cavitation
None expected.

Conclusion:
Not believed to be of concern.

o Creep
The temperatures are too low to be a concern.

Conclusion:
Not applicable.

PLANT ITEM MATERIAL SELECTION DATA SHEET

References:

1 Jenkins, CF, 1998, *Performance of Evaporators in High Level Radioactive Chemical Waste Service*, Presented at Corrosion 98, NACE International, Houston TX 77084

2. Koch, GH, 1995, *Localized Corrosion in Halides Other Than Chlorides*, MTI Pub No 41, Materials Technology Institute of the Chemical Process Industries, Inc, St Louis, MO 63141

3 Revie, WW, 2000. *Uhlig's Corrosion Handbook*, 2nd Edition, Wiley-Interscience, New York, NY 10158

4 Uhlig, HH, 1948, *Corrosion Handbook*, John Wiley & Sons, New York, NY 10158

Bibliography:

1. Danielson, MJ & SG Pitman, 2000, *Corrosion Tests of 316L and Hastelloy C-22 in Simulated Tank Waste Solutions*, PNWD-3015 (BNFL-RPT-019, Rev 0), Pacific Northwest Laboratory, Richland WA.

2 Davis, JR (Ed), 1987, *Corrosion, Vol 13*, In "Metals Handbook", ASM International, Metals Park, OH 44073

3. Davis, JR (Ed), 1994, *Stainless Steels*, In ASM Metals Handbook, ASM International, Metals Park, OH 44073

4 Hamner, NE, 1981, *Corrosion Data Survey*, Metals Section, 5th Ed, NACE International, Houston, TX

5 Jones, RH (Ed.), 1992, *Stress-Corrosion Cracking*, ASM International, Metals Park, OH 44073

6 Sedriks, AJ, 1996, *Corrosion of Stainless Steels*, John Wiley & Sons, Inc., New York, NY 10158

7. Van Delinder, LS (Ed), 1984, *Corrosion Basics*, NACE International, Houston, TX 77084

PLANT ITEM MATERIAL SELECTION DATA SHEET

OPERATING CONDITIONS

Materials Selection Data

Material Selection Data Sheets for The Pretreatment Facility

Component (Name/ID) FEP-COND-00002A/B
System FEP

Operations

Chemicals	Unit	Cold Startup	Normal Operation*	Standby/Idle	Cleaning	Accident
Aluminum	g/l	N/A	4.4E-06	N/A	N/A	N/A
Chloride	g/l		1.7E-06			
Fluoride	g/l		4.8E-08			
Hydroxide	g/l		4.1E-07			
Iron	g/l		3.6E-07			
Nitrate	g/l		4.7E-06			
Nitrite	g/l		6.3E-05			
Phosphate	g/l		2.3E-06			
TOC♀	g/l		3.9E-06			
Sulfate	g/l		4.4E-07			
Undissolved solids	g/l		0.0E+00			
Particle size/hardness	µm (##)		N/A			
Other (Hg)	g/l		2.8E-10			
Carbonate	g/l		1.3E-07			
pH	-		6 to 8			
Dose rate, α, β/γ (inside)	Rad		N/A			
Temperature	°F		212			
Velocity	fps		N/A			
Vibration			N/A			
Time of exposure	#		1.0E+02			

* Based on Chemical Maximum Chemical A/D run at 60/6

- % of total; ## - use Mho scale

Remarks: Stream FEP06

Comments: Trace HNO3 Vapors During Acid Cleaning of Separator and Reboiler

[X] C3 Area

[X] Flushing

♀ List expected organic species: N/A
Use maximum of 2 significant figures

N/A = Information not available or not in Process Engineering Scope.

PLANT ITEM MATERIAL SELECTION DATA SHEET

FEP-COND-00003A/B (PTF)
Waste Feed Evaporator Aftercondensers

- Design Temperature (°F)(max/min): 250/49
- Design Pressure (psig) (max/min): Shell side 50/FV; Tube side 100/FV
- Location: incell

ISSUED BY PP-WTP PDC 3/19/04 INIT DATE

Contents of this document are Dangerous Waste Permit Affecting

Operating conditions are as stated on sheet 5

Operating Modes Considered:

- pH ≈7, temperature up to 250°F

Materials Considered:

Material (UNS No.)	Relative Cost	Acceptable Material	Unacceptable Material
Carbon Steel	0.23		X
304L (S30403)	1.00		X
316L (S31603)	1.18	X	
6% Mo (N08367/N08926)	7.64	X	
Alloy 22 (N06022)	11.4	X	
Ti-2 (R50400)	10.1		X

Recommended Material: 316 (max 0.030% C; dual certified)
Recommended Corrosion Allowance: 0.04 inch

Process & Operations Limitations:

- None

STEVEN WAKEMAN VAIL
STATE OF WASHINGTON
39250
REGISTERED PROFESSIONAL ENGINEER
3/19/04
EXPIRES: 12/07/05

Please note that source, special nuclear and byproduct materials, as defined in the Atomic Energy Act of 1954 (AEA), are regulated at the U.S. Department of Energy (DOE) facilities exclusively by DOE acting pursuant to its AEA authority. DOE asserts, that pursuant to the AEA, it has sole and exclusive responsibility and authority to regulate source, special nuclear, and byproduct materials at DOE-owned nuclear facilities. Information contained herein on radionuclides is provided for process description purposes only.

This bound document contains a total of 5 sheets.

REV	DATE	REASON FOR REVISION	PREPARER	CHECKER	APPROVER
0	3/19/04	Issued for Permitting Use			

PLANT ITEM MATERIAL SELECTION DATA SHEET

Corrosion Considerations:

a General Corrosion
In the proposed pH operating range, no information was found for the general/uniform corrosion of stainless steels or other material. Typically, the austenitic and higher alloy steels are expected to have corrosion rates of less than about 1 mpy. This lack of data is not critical because the alloys needed for the system typically fail by pitting, crevice corrosion, or cracking. On this basis, a corrosion allowance has little meaning though a nominal value is given

Conclusion·
Little uniform corrosion is expected, even under accident conditions A nominal corrosion allowance is given even though it has minimal significance.

b Pitting Corrosion
Chloride is known to cause pitting in acid and neutral solutions. It is thought that in alkaline solutions, pH>12, chlorides are likely to promote pitting only in tight crevices. Koch (1995) is of the opinion that fluoride will have little effect Jenkins (1998) has stated that localized corrosion can occur under the deposits on tubes, probably due to the chlorides Further, Revie (2000) and Uhlig (1948) note that nitrates inhibit chloride pitting.

The condensers have concentrations of less than 0.002 ppm chloride and pH in the range of 6-8 rather than above 12. At the stated temperatures with low halides, 316L stainless steel is recommended

Conclusion
Based on the expected operating conditions the vessel should be 316L stainless steel.

c End Grain Corrosion
End grain corrosion only occurs in metal with exposed end grains and in highly oxidizing acid conditions

Conclusion: Not applicable to this system.

d Stress Corrosion Cracking
The exact amount of chloride required to cause stress corrosion cracking is unknown. In part this is because the amount varies with temperature, metal sensitization, and the environment. But it is also unknown because chloride tends to concentrate under heat transfer conditions, by evaporation, and electrochemically during a corrosion process. Hence, even as little as 10 ppm can lead to cracking under some conditions. The proposed operating conditions provide a possible stress corrosion cracking environment. However, 304L and 316L are less susceptible to cracking compared to 304 and 316. Under the stated conditions, 316L is considered acceptable.

Given the environment and the lack of heat transfer into the process stream, caustic cracking is not anticipated to be a problem.

Conclusion
Because of the normal operating environment, the minimum alloy recommended is a 316L stainless steel.

e Crevice Corrosion
See Pitting.

Conclusion
See Pitting

f Corrosion at Welds
Other than pitting or crevice corrosion, corrosion at welds is not considered a problem in the proposed environment.

Conclusion
Weld corrosion is not considered a problem for this system.

g Microbiologically Induced Corrosion (MIC)
The proposed operating conditions on the process side are acceptable for microbe growth. Because, however, the source of the stream is from the evaporation of a process fluid, no microbes are expected to be present.

Conclusion:
MIC is not considered a problem.

h Fatigue/Corrosion Fatigue
Corrosion fatigue should not be a problem.

Conclusions
Not expected to be a concern.

PLANT ITEM MATERIAL SELECTION DATA SHEET

i Vapor Phase Corrosion
The vapor phase portion of the shell will be continually washed with condensing vapors

Conclusion
No vapor phase corrosion is anticipated.

j Erosion
Velocities within the condenser are expected to be low.

Conclusion.
Not a concern

k Galling of Moving Surfaces
Not applicable.

Conclusion:
Not applicable.

l Fretting/Wear
Not expected to be applicable.

Conclusion:
Not applicable.

m Galvanic Corrosion
For the environment and the proposed alloys, there is not believed to be a concern.

Conclusion:
Not believed to be of concern.

n Cavitation
None expected.

Conclusion
Not believed to be of concern.

o Creep
The temperatures are too low to be a concern.

Conclusion:
Not applicable.

PLANT ITEM MATERIAL SELECTION DATA SHEET

References:

1. Jenkins, CF, 1998, *Performance of Evaporators in High Level Radioactive Chemical Waste Service*, Presented at Corrosion 98, NACE International, Houston TX 77084
2. Koch, GH, 1995, *Localized Corrosion in Halides Other Than Chlorides*, MTI Pub No. 41, Materials Technology Institute of the Chemical Process Industries, Inc, St Louis, MO 63141
3. Revie, WW, 2000 *Uhlig's Corrosion Handbook, 2nd Edition*, Wiley-Interscience, New York, NY 10158
4. Uhlig, HH, 1948, *Corrosion Handbook*, John Wiley & Sons, New York, NY 10158

Bibliography:

1. Danielson, MJ & SG Pitman, 2000, *Corrosion Tests of 316L and Hastelloy C-22 in Simulated Tank Waste Solutions*, PNWD-3015 (BNFL-RPT-019, Rev 0), Pacific Northwest Laboratory, Richland WA.
2. Davis, JR (Ed), 1987, *Corrosion, Vol 13*, In "Metals Handbook", ASM International, Metals Park, OH 44073
3. Davis, JR (Ed), 1994, *Stainless Steels*, In ASM Metals Handbook, ASM International, Metals Park, OH 44073
4. Hamner, NE, 1981, *Corrosion Data Survey*, Metals Section, 5th Ed, NACE International, Houston, TX
5. Jones, RH (Ed), 1992, *Stress-Corrosion Cracking*, ASM International, Metals Park, OH 44073
6. Sedriks, AJ, 1996, *Corrosion of Stainless Steels*, John Wiley & Sons, Inc., New York, NY 10158
7. Van Delinder, LS (Ed), 1984, *Corrosion Basics*, NACE International, Houston, TX 77084

PLANT ITEM MATERIAL SELECTION DATA SHEET

OPERATING CONDITIONS

Materials Selection Data

Material Selection Data Sheets for The Pretreatment Facility

Component (Name/ID) FEP-COND-00003A/B
System FEP

Operations

Chemicals	Unit	Cold Startup	Normal Operation*	Standby/Idle	Cleaning	Accident
	g/l	N/A	4.4E-06	N/A	N/A	N/A
Chloride	g/l		1.7E-06			
Fluoride	g/l		4.8E-08			
Hydroxide	g/l		4.1E-07			
Iron	g/l		3.6E-07			
Nitrate	g/l		4.7E-06			
Nitrite	g/l		6.3E-05			
Phosphate	g/l		2.3E-06			
TOC[†]	g/l		3.9E-06			
Sulfate	g/l		4.4E-07			
Undissolved solids	g/l		0.0E+00			
Particle size/hardness	µm (##)		N/A			
Other (Hg)	g/l		2.8E-10			
Carbonate	g/l		1.3E-07			
pH	-		6 to 8			
Dose rate, α, β/γ (inside)	Rad		N/A			
Temperature	°F		1.8E+02			
Velocity	fps		N/A			
Vibration			N/A			
Time of exposure	#		1.0E+02			

* Based on Chemical Maximum Chemical A/D run at 60/6

- % of total; ## - use Mho scale

Remarks: Stream FEP06

Comments: Trace HNO3 Vapors During Acid Cleaning of Separator and Reboiler

[X] C3 Area

[X] Flushing

[†] List expected organic species: N/A
Use maximum of 2 significant figures

N/A = Information not available or not in Process Engineering Scope.

R10272849

24590-PTF-N1D-FEP-P0013
Rev. 0

PLANT ITEM MATERIAL SELECTION DATA SHEET

FEP-COND-00001A/B (PTF)
Waste Feed Evaporator Primary Condenser

- Design Temperature (°F) (max/min): 250/49
- Design Pressure (psig) (max/min): Shell side 50/FV; Tube side 100/FV
- Location: incell

ISSUED BY
RPP-WTP PDC
INIT DATE

Contents of this document are Dangerous Waste Permit Affecting

Operating conditions are as stated on sheet 5

Operating Modes Considered:

- Stream to condensers at pH 7, 122°F

Materials Considered:

Material (UNS No.)	Relative Cost	Acceptable Material	Unacceptable Material
Carbon Steel	0.23		X
304L (S30403)	1.00	X	
316L (S31603)	1.18	X	
6% Mo (N08367/N08926)	7.64	X	
Alloy 22 (N06022)	11.4	X	
Ti-2 (R50400)	10.1		X

Recommended Material: 316 (max 0.030% C; dual certified)

Recommended Corrosion Allowance: 0.04 inch

Process & Operations Limitations:

- None

STEVEN WAKEMAN VAIL
STATE OF WASHINGTON
39250
REGISTERED PROFESSIONAL ENGINEER
EXPIRES: 12/07/05
3/18/04

Please note that source, special nuclear and byproduct materials, as defined in the Atomic Energy Act of 1954 (AEA), are regulated at the U.S. Department of Energy (DOE) facilities exclusively by DOE acting pursuant to its AEA authority. DOE asserts, that pursuant to the AEA, it has sole and exclusive responsibility and authority to regulate source, special nuclear, and byproduct materials at DOE-owned nuclear facilities. Information contained herein on radionuclides is provided for process description purposes only.

This bound document contains a total of 5 sheets.

REV	DATE	REASON FOR REVISION	PREPARER	CHECKER	APPROVER
0	3/18/04	Issued for Permitting Use			

PLANT ITEM MATERIAL SELECTION DATA SHEET

Corrosion Considerations:

a General Corrosion
Uniform corrosion is not a concern at the normal operating conditions and under those conditions, 304L would be suitable.

In 2N nitric acid cleaning, the corrosion rates are low. The amounts of halides and solids are also small so there is little concern about excessive uniform attack.

Conclusion: At temperatures less than 140°F, either 304L or 316L is expected to be sufficiently resistant to the waste solution with a probable general corrosion rate of less than 1 mpy.

b Pitting Corrosion
At the expected normal operating conditions, 304L is expected to be acceptable. However, at temperatures approaching the maximum design temperature a more resistant alloy would be needed.

Conclusion:
Based on the expected operating conditions the vessel and the relatively elevated design temperature, 316L is recommended to provide additional pitting resistance under high-temperature conditions.

c End Grain Corrosion
End grain corrosion only occurs in metal with exposed end grains and in highly oxidizing acid conditions.

Conclusion: Not applicable to this system.

d Stress Corrosion Cracking
The exact amount of chloride required to cause stress corrosion cracking is unknown. In part this is because the amount varies with temperature, metal sensitization, and the environment. But it is also unknown because chloride tends to concentrate under heat transfer conditions, by evaporation, and electrochemically during a corrosion process. Hence, even as little as 10 ppm can lead to cracking under some conditions. Generally, as seen in Sedriks (1996) and Davis (1987), stress corrosion cracking does not usually occur below about 140°F. Further, the use of "L" grade stainless reduces the opportunity for sensitization.

Conclusion:
Because of the normal operating environment as well as that which can occur during off normal conditions, the minimum alloy recommended is 316L.

e Crevice Corrosion
The pitting discussion covers this area.

Conclusion:
See Pitting.

f Corrosion at Welds
Other than pitting or crevice corrosion, corrosion at welds is not considered a problem in the proposed environment.

Conclusion:
Weld corrosion is not considered a problem for this system.

g Microbiologically Induced Corrosion (MIC)
The proposed operating conditions on the process side are acceptable for microbe growth. The use of treated water eliminates the concern.

Conclusion.
MIC should not be a concern.

h Fatigue/Corrosion Fatigue
Corrosion fatigue is not expected to be a concern.

Conclusions
Not believed to be a concern.

i Vapor Phase Corrosion
The vapor phase portion of the shell will be continually washed with condensing vapors.

Conclusion:
No vapor phase corrosion is anticipated.

PLANT ITEM MATERIAL SELECTION DATA SHEET

j Erosion
Velocities within the condenser are expected to be low.

Conclusion.
Not a concern.

k Galling of Moving Surfaces
Not applicable.

Conclusion.
Not applicable

l Fretting/Wear
Not expected to be a concern.

Conclusion:
Not a concern.

m Galvanic Corrosion
For the environment and the proposed alloys, there is not believed to be a concern..

Conclusion
Not a concern.

n Cavitation
None expected.

Conclusion.
Not believed to be of concern.

o Creep
The temperatures are too low to be a concern.

Conclusion:
Not applicable.

PLANT ITEM MATERIAL SELECTION DATA SHEET

References:

1 Davis, JR (Ed), 1987, *Corrosion, Vol 13*, In "Metals Handbook", ASM International, Metals Park, OH 44073
2. Sedriks, AJ, 1996, *Corrosion of Stainless Steels*, John Wiley & Sons, Inc., New York, NY 10158

Bibliography:

1 Danielson, MJ & SG Pitman, 2000, *Corrosion Tests of 316L and Hastelloy C-22 in Simulated Tank Waste Solutions*, PNWD-3015 (BNFL-RPT-019, Rev 0), Pacific Northwest Laboratory, Richland WA.
2. Davis, JR (Ed), 1994, *Stainless Steels*, In ASM Metals Handbook, ASM International, Metals Park, OH 44073
3. Hamner, NE, 1981, *Corrosion Data Survey*, Metals Section, 5th Ed, NACE International, Houston, TX
4 Jones, RH (Ed.), 1992, *Stress-Corrosion Cracking*, ASM International, Metals Park, OH 44073
5. Koch, GH, 1995, *Localized Corrosion in Halides Other Than Chlorides*, MTI Pub No. 41, Materials Technology Institute of the Chemical Process Industries, Inc, St Louis, MO 63141
6 Theus, GJ and JR Cels, 1974, *Fluoride Induced Intergranular Stress Corrosion Cracking of Sensitized Stainless Steel*, In: Corrosion Problems in Energy Conversion and Generation.
7. Uhlig, HH, 1948, *Corrosion Handbook*, John Wiley & Sons, New York, NY 10158
8 Van Delinder, LS (Ed), 1984, *Corrosion Basics*, NACE International, Houston, TX 77084

PLANT ITEM MATERIAL SELECTION DATA SHEET
OPERATING CONDITIONS

Material Selection Data Sheets for The Pretreatment Facility

Materials Selection Data

Component (Name/ID) FEP-COND-00001A/B
System FEP

Operations

Chemicals	Unit	Cold Startup	Normal Operation*	Standby/Idle	Cleaning	Accident
Aluminum	g/l	N/A	4.4E-06	N/A	N/A	N/A
Chloride	g/l		1.7E-06			
Fluoride	g/l		4.8E-08			
Hydroxide	g/l		4.1E-07			
Iron	g/l		3.6E-07			
Nitrate	g/l		4.7E-06			
Nitrite	g/l		6.3E-05			
Phosphate	g/l		2.3E-06			
TOC♤	g/l		3.9E-06			
Sulfate	g/l		4.4E-07			
Undissolved solids	g/l		0.0E+00			
Particle size/hardness	µm (##)		N/A			
Other (Hg)	g/l		2.8E-10			
Carbonate	g/l		1.3E-07			
pH	-		6 to 8			
Dose rate, α, β/γ (inside)	Rad		N/A			
Temperature	°C		5.0E+01			
Velocity	fps		N/A			
Vibration			N/A			
Time of exposure	#		1.0E+02			

* Based on Contract Maximum Chemical A/D run at 60/6

- % of total; ## - use Mho scale

Remarks: Stream FEP06

Comments: HNO3 Vapors During Acid Cleaning of Separator and Reboiler

[X] C3 Area

[X] Flushing

♤ List expected organic species: N/A
Use maximum of 2 significant figures

N/A = Information not available or not in Process Engineering Scope.

ISSUED BY
RPP-WTP PDC
INIT 7/23/04 DATE

24590-PTF-N1D-FRP-P0001
Rev. 2

R10340141

PLANT ITEM MATERIAL SELECTION DATA SHEET

FRP-VSL-00002A-D (PTF)
Waste Feed Receipt Vessels

- Design Temperature (°F)(Max/min): 240/5
- Design Pressure (psig) (Max/min): 15/-2.5
- Location: incell
- PJM Discharge Velocity (fps) (max): 40
- PJM Duty Cycle: 25 %

Off spring items

FRP-PJM-00001 – FRP-PJM-00036,
FRP-PJM-00061 – FRP-PJM-00072

Contents of this document are Dangerous Waste Permit affecting

Operating Conditions are as stated on sheets 6 and 7

The waste for these vessels primarily comes from the DOE.

Operating Modes Considered:

- Vessel is alkaline at between 60 and 120°F operating temperature range
- Vessel is alkaline at 240 °F design temperature.
- Vessel is subjected to acid cleaning.

Materials Considered:

Material (UNS no.)	Relative Cost	Acceptable Material	Unacceptable Material
Carbon Steel	0.23		X
304L (S30403)	1.00		X
316L (S31603)	1.18	X	
6% Mo (N08367/N08926)	7.64	X	
Alloy 22 (N06022)	11.4	X	
Ti-2 (R50400)	10.1		X

Recommended Material: 316 (max 0.030% C; dual certified)

Recommended Corrosion Allowance: 0.04 inch (includes 0.00 inch general erosion allowance; localized protection will be provided as necessary and is discussed elsewhere)

Process & Operations Limitations:

- Maintain pH>12.
  Exceptions:
  - Nitric acid cleaning shall be performed only after removal of waste and an initial water rinse.
  - Untreated rinse water shall not be left in the vessel for more than 7 days to prevent microbiological attack.

STEVEN WAKEMAN VAIL
STATE OF WASHINGTON
39250
REGISTERED PROFESSIONAL ENGINEER
7/23/04
EXPIRES: 12/07/05

Please note that source, special nuclear and byproduct materials, as defined in the Atomic Energy Act of 1954 (AEA), are regulated at the U.S. Department of Energy (DOE) facilities exclusively by DOE acting pursuant to its AEA authority. DOE asserts, that pursuant to the AEA, it has sole and exclusive responsibility and authority to regulate source, special nuclear, and byproduct materials at DOE-owned nuclear facilities. Information contained herein on radionuclides is provided for process description purposes only.

This bound document contains a total of 7 sheets.

REV	DATE	REASON FOR REVISION	PREPARER	CHECKER	APPROVER
2	7/23/04	Issued for Permitting Use		APR	SWV
1	7/15/04	Issued for Permitting Use	DLA	APR	SWV
0	8/20/03	Issued for Permitting Use	DLA	JRD	APR

PLANT ITEM MATERIAL SELECTION DATA SHEET

Corrosion Considerations:

The waste feed receipt vessels can accept tank farm waste providing its storage temperature is below 120 °F and its undissolved solids content is below 5 wt%. The waste is then transferred to either the ultrafiltration feed preparation vessels or the waste feed evaporator feed vessels.

a General Corrosion
Sedriks (1996) reported that 300 series stainless steels have corrosion rates less than 1 mpy in 50% NaOH at 122°F. Nelson (1987) reported that 304 and 316 have a corrosion rate less than 0.1 mpy in 60 % NaOH at 200°F. Danielson and Pitman (2000) found that 316L has a corrosion rate of 0.5 mpy in simulated Hanford waste (1 to 14 % NaOH) at its boiling point of ~220°F. Sedriks states higher corrosion rates may occur above 122°F if oxidizing species are present. Hanford waste contains nitrate and nitrite, which, though oxidizing, mitigates corrosion at higher temperatures.

It has been found that 304L corroded less than 316L in simulated Hanford complexant waste (22 to 30 % NaOH) saturated with fluorides (F^-) and 5,000 to 27,000 ppm chlorides (Cl^-) at 140°F. The corrosion rate of 304L after six months of testing was less than 0.2 mpy and for 316L, less than 1 mpy.

Sedriks (1996) using 10% nitric acid with 3,000 ppm fluoride at 158°F showed the corrosion rate of 304L and 316L was over 4 in/yr. Wilding and Paige (1976) showed that in 5% nitric acid with 1,000 ppm fluoride at 290°F the corrosion rate of 304L and 316L could be reduced to 5 mpy with the addition of trivalent aluminum (Al^{+++}). The Al^{+++} present in WTP waste is high enough to inhibit most of the fluoride activity during the nitric acid cleaning cycles.

Conclusion:
Either 304L or 316L is acceptable with a corrosion allowance of 0.04 inch.

b Pitting Corrosion
Chloride can cause pitting of stainless steel and nickel alloys in acid and neutral solutions. It is thought that in alkaline solution with pH>12, 304L is acceptable and that Cl^- might only promote attack in very tight crevices, if at all. Molybdenum containing stainless steels such as 316L and 6% Mo provide increased resistance to pitting by chlorides. Koch (1995) concluded that fluoride would have little effect at this high pH range.

Divine and Carlos (1992) reported no pitting of 304L after six months at 140°F under 'boiling heat transfer' conditions in simulated Hanford 242-A evaporator operations. Revie (2000) showed that nitrate levels comparable to those present in WTP waste inhibit chloride induced pitting corrosion of 304L. Ohl and Carlos (1994) in their review of the Hanford 242-A evaporator, found that 304L had neither pitting nor cracking after two years of operation in waste similar to that expected in LAW, including the presence of radiation.

Conclusion:
Both type 304L and 316L are acceptable, but 316L is preferred as more conservative.

c End Grain Corrosion
End grain corrosion can occur in stainless steels in hot, highly oxidizing acids. This system is alkaline except for brief periods during nitric acid cleaning and high temperatures are not expected.

Conclusion:
Type 316L is acceptable.

d Stress Corrosion Cracking
Sedriks (1996) and Davis (1987) concluded that chloride induced stress corrosion cracking (SCC) of 300 series stainless steel rarely occurs at the 102°F operating temperature in neutral and acidic conditions; and, not at all in high pH conditions. Emptying and rinsing the tank prior to nitric acid washes and proper flushing afterwards will minimize the effects of chlorides during cleaning. Type 316L is resistant to welding induced sensitization and SCC due to its low carbon content.

Caustic SCC of 300 series stainless steel does not occur below 140°F in 25 % NaOH according to Jones (1992).

Conclusion:
Type 316L is recommended.

e Crevice Corrosion
See discussion under Pitting.

Conclusion:
Type 316L is acceptable.

f Corrosion at Welds
Type 316L welds with a minimum delta ferrite content of 5% (5 Ferrite Number) are equally resistant to corrosion as 316L base material.

***Conclusion*:**
Type 316L welds are recommended.

PLANT ITEM MATERIAL SELECTION DATA SHEET

g Microbiologically Induced Corrosion (MIC)
MIC does not occur in 12 pH solutions (Borenstein 1988). Untreated water left stagnant for more than 7 days may lead to conditions favorable to MIC in 304L and 316L stainless steel.

Conclusion:
MIC is not a concern for high pH conditions. Controls are required for hydrotest or flush water.

h Fatigue/Corrosion Fatigue
Corrosion fatigue is not a concern for high pH conditions.

Conclusions:
Type 316L is acceptable.

i Vapor Phase Corrosion
Because of the highly alkaline conditions, no free HF or HCl gas is expected in the vapor phase and no general corrosion is expected during normal operation. Both HCl and HF gas may be generated during nitric acid cleaning and cause minor pitting during the relatively short cleaning cycle. This can be minimized with a thorough water rinse prior to nitric acid cleaning

Conclusion:
Type 316L is acceptable.

j Erosion
Based on past experiments by Smith & Elmore (1992), the solids are soft and erosion is not expected to be a concern for the vessel wall. At least 0.044 inch of additional 316L stainless steel should be provided as localized protection for the applicable portions of the bottom head to accommodate PJM discharge velocities of up to 12 m/s with solids concentrations of 3.8 wt% for 25 % operation. The 3.8 wt% is considered to be conservative and is based on the WTP Prime Contract maximum. During normal operation, the solids content of the FRP-VSL-00002 vessels is expected to be well below the contract maximum. The Process Corrosion Data Sheet states that the FRP vessels will only accept feed from the Tank Farms that is below 5 wt% solids, and notes that the maximum undissolved solids can be as high as 3.92 wt% to 4.60 wt%. These latter numbers were determined by the concentration of waste received at 3.8 wt% due to evaporation before it is processed. The 25 % operation is expected to bound normal. The wear due to solids contents up to 5 wt% and 100 % operation has been determined.

The wear of the PJM nozzles can occur from flow for both the discharge and reflood cycles of operation. At least 0.041 inch of additional 316L stainless steel should be provided on the inner surface of the PJM nozzle to accommodate wear due to PJM discharge and suction velocities with solids concentrations of 3.8 wt% for 25 % operation.

Conclusion: The recommended corrosion allowance provides sufficient protection for erosion of the vessel wall. Additional localized protection for the bottom head will accommodate PJM discharge velocities and for the PJM nozzles will accommodate PJM discharge and reflood velocities.

k Galling of Moving Surfaces
There are no moving surfaces within the vessels.

Conclusion:
Galling is of no concern in these vessels.

l Fretting/Wear
There are no contacting surfaces that are part of the vessel.

Conclusion:
Fretting and wear are not of concern.

m Galvanic Corrosion
The vessel contains no dissimilar metals.

Conclusion:
Galvanic corrosion is not a concern.

n Cavitation
None expected.

Conclusion:
Cavitation is not a concern.

o Creep
The temperatures are too low to be a concern.

Conclusion:
Not applicable.

PLANT ITEM MATERIAL SELECTION DATA SHEET

p Cold Work
Testing performed by Atteridge (2002) of type 304L and 316L pipe with three diameter bends and ~ 17 % cold work in simulated WTP cleaning conditions showed no SCC. Smaller diameter cold bends are not used for WTP piping. Neither accelerated corrosion, nor SCC, is expected in operation due to high pH conditions.

Conclusion:
Type 316L is acceptable.

q Inadvertent Nitric Acid Addition
Higher chloride contents and higher temperatures usually require higher alloy materials. Nitrate ions inhibit the pitting and crevice corrosion of stainless alloys. Furthermore, nitric acid passivates these alloys; therefore, lower pH values brought about by increases in the nitric acid content of process fluid will not cause higher corrosion rates for these alloys. The upset condition that was most likely to occur is lowering of the pH of the vessel content by inadvertent addition of 0.5 M nitric acid. Assuming that a heel is remaining in the vessel when a quantity of 0.5 M nitric acid is added and assuming that the quantity added is sufficient to drive the pH to neutral or up to the volume of nitric acid available, the composition of the waste would be sufficiently diluted as to make the drop in pH not a concern.

Conclusion:
The recommended materials will be able to withstand a plausible inadvertent addition of 0.5 M nitric acid.

Off-Normal Operating Modes

Any loss of power is assumed to be < 72 hours and the time to heat up is slow. Therefore, the durations of off-normal operations are assumed to be short (< 36 hours). Therefore, more rapid corrosion at temperatures up to 240°F is minimized.

Vessel cleaning with nitric acid is permitted only after an initial water rinse.

PLANT ITEM MATERIAL SELECTION DATA SHEET

References:

1. Atteridge, DG & RB Davis, 2002, *Assessment of Cold-Bent Stainless Steel Piping To Environmental Degradation*, RJ Lee Group, Pasco, WA
2. Borenstein, SW, 1988. *Microbiologically Influenced Corrosion Of Austenitic Stainless Steel*, Materials Selection & Design August 1988
3. Danielson, MJ & SG Pitman, 2000, *Corrosion Tests of 316L and Hastelloy C-22 in Simulated Tank Waste Solutions*, PNWD-3015 (BNFL-RPT-019, Rev 0), Pacific Northwest Laboratory, Richland WA.
4. Davis, JR (Ed), 1987, *Corrosion, Vol 13*, In "Metals Handbook", ASM International, Metals Park, OH 44073
5. Divine, J. R. and W. C. Carlos, 1992, *Assessment of Known Degradation and Existing Corrosion Studies on Steel*, Presented at the High-Level Waste Tank Systems Structural Integrity Workshop, February 19-20, 1992, Richland, Washington
6. Jones, RH (Ed.), 1992, *Stress-Corrosion Cracking*, ASM International, Metals Park, OH 44073
7. Koch, GH, 1995, *Localized Corrosion in Halides Other Than Chlorides*, MTI Pub No. 41, Materials Technology Institute of the Chemical Process Industries, Inc, St Louis, MO 63141
8. Nelson, JK, 1987, *Corrosion*, Volume 13, p. 1178, Figure 13, ASM Metals Handbook, ASM International, Metals Park, OH
9. Ohl, PC & WC Carlos, 1994, *Hanford High-Level Evaporator/Crystallizer Corrosion Evaluation*, WHC-SA-1983-FP, Westinghouse Hanford Co., Richland, WA 99352
10. Revie, WW, 2000. *Uhlig's Corrosion Handbook*, 2nd Edition, Wiley-Interscience, New York, NY 10158
11. Sedriks, AJ, 1996, *Corrosion of Stainless Steels*, John Wiley & Sons, Inc., New York, NY.
12. Smith, H. D. and M. R. Elmore, 1992, *Corrosion Studies of Carbon Steel under Impinging Jets of Simulated Slurries of Neutralized Current Acid Waste (NCAW) and Neutralized Cladding Removal Waste (NCRW)*, PNL-7816, Pacific Northwest Laboratory, Richland, Washington.
13. Wilding, MW and BE Paige, 1976, *Survey on Corrosion of Metals and Alloys in Solutions Containing Nitric Acid*, ICP-1107, Idaho National Engineering Laboratory, Idaho Falls, ID
14. WTP Prime Contract No. DE-AC27-01RV14136, Section C, *Statement of Work*, Modification No. M033, Specification 7.2.2.1.

Bibliography:

1. Chang, J. Y., 1998, *Corrosion Monitoring and Control for Tanks 8D-1 & 8D-2*, Report of the Fourth Annual Corrosion Meeting, West Valley, New York.
2. Davis, JR, 1994, *Stainless Steels*, In ASM Metals Handbook, ASM International, Metals Park, OH 44073
3. Hamner, NE, 1981, *Corrosion Data Survey*, Metals Section, 5th Ed, NACE International, Houston, TX
4. Kirch, N. W., 1984, *Technical Basis for Waste Tank Corrosion Specifications*, SD-WM-TI-150, Rockwell Hanford Operations, Richland, Washington.
5. Phull, BS, WL Mathay, & RW Ross, 2000, *Corrosion Resistance of Duplex and 4-6% Mo-Containing Stainless Steels in FGD Scrubber Absorber Slurry Environments*, Presented at Corrosion 2000, Orlando, FL, March 26-31, 2000, NACE International, Houston TX 77218.
6. Theus, GJ and JR Cels, 1974, *Fluoride Induced Intergranular Stress corrosion Cracking of Sensitized Stainless Steel*, Corrosion Problems in Energy Conversion and Generation.
7. Zapp, PE, 2000, *Material Corrosion and Plate-Out Test of Types 304L and 316L Stainless Steel*, WSRC-TR-2000-00434, Savannah River Site, Aiken, SC

PLANT ITEM MATERIAL SELECTION DATA SHEET

OPERATING CONDITIONS

PROCESS CORROSION DATA SHEET

Component(s) (Name/ID #) Waste feed receipt vessel (FRP-VSL-00002A/B/C/D)

Facility PTF

In Black Cell? Yes

Chemicals	Unit[1]	Contract Max		Non-Routine		Notes
		Leach	No leach	Leach	No Leach	
Aluminum	g/l	9.79E+01	7.25E+01			
Chloride	g/l	4.24E+01	3.14E+01			
Fluoride	g/l	5.08E+01	3.76E+01			
Iron	g/l	2.34E+01	1.74E+01			
Nitrate	g/l	6.83E+02	5.06E+02			
Nitrite	g/l	2.34E+02	1.73E+02			
Phosphate	g/l	1.67E+02	1.23E+02			
Sulfate	g/l	9.00E+01	6.66E+01			
Mercury	g/l	9.26E-02	6.86E-02			
Carbonate	g/l	2.57E+02	1.91E+02			
Undissolved solids	wt%	4.60%	3.92%			Note 4
Other (NaMnO4, Pb,...)	g/l					
Other	g/l					
pH	N/A					Note 2
Temperature	°F					Note 3

List of Organic Species:

Notes:

1. Concentrations less than 1x 10^{-4} g/l do not need to be reported; list values to two significant digits max.
2. Feed will be basic with pH of 13.8 expected to be the nominal received from tank farms.
3. T normal operation 60 °F to 120 °F
4. FRP vessels will only accept feed from Tank Farms that is below 5 % solids.

Assumptions:

PLANT ITEM MATERIAL SELECTION DATA SHEET

4.5.1 Waste Feed Receipt Vessel (FRP-VSL-00002A/B/C/D)

Routine Operations

The four waste feed receipt vessels are primarily used to receive waste feed from the Tank Farms and transfer the waste to either the ultrafiltration feed preparation vessels (UFP-VSL-00001A/B) or the waste feed evaporator feed vessels (FEP-VSL-00017A/B). The waste feed receipt vessels (FRP-VSL-00002A/B/C/D) can accept Tank Farm waste at a temperature range of 55 °F to 120 °F with a solids content below 5 wt %. These parameters will be confirmed before the transfer. Tank Farm waste that has a temperature or solids content above these criteria will be sent to the HLW feed receipt vessel (HLP-VSL-00022) because it has a cooling jacket.

Non-Routine Operations that Could Affect Corrosion/Erosion

None identified.

PLANT ITEM MATERIAL SELECTION DATA SHEET

R10128798

ISSUED BY
RPP-WTP PDC
LM 10/1/03
INIT DATE

HLP-BRKPT-00004 & HLP-BRKPT-00006 (PTF)
Cs Concentrate Receipt Breakpots

- Design Temperature (°F) (max/min): 368/40
- Design Pressure (psig): 15
- Location: incell

Contents of this document are Dangerous Waste Permit affecting

Operating conditions are as stated on sheets 5 and 6

Operating Modes Considered:

- High-pressure steam is received in the breakpot.

Materials Considered:

Material (UNS No.)	Relative Cost	Acceptable Material	Unacceptable Material
Carbon Steel	0.23		X
304L (S30403)	1.00		X
316L (S31603)	1.18		X
6% Mo (N08367/N08926)	7.64	X	
Alloy 22 (N06022)	11.4	X	
Ti-2 (R50400)	10.1		X

Recommended Material: UNS N08367/N08926

Recommended Corrosion Allowance: 0.04 inch

Process & Operations Limitations:

- Flush with water after acid transfer.

STEVEN WAKEMAN VAIL
STATE OF WASHINGTON
39250
REGISTERED PROFESSIONAL ENGINEER
9/30/03
EXPIRES: 12/07/03

Please note that source, special nuclear and byproduct materials, as defined in the Atomic Energy Act of 1954 (AEA), are regulated at the U.S. Department of Energy (DOE) facilities exclusively by DOE acting pursuant to its AEA authority. DOE asserts, that pursuant to the AEA, it has sole and exclusive responsibility and authority to regulate source, special nuclear, and byproduct materials at DOE-owned nuclear facilities. Information contained herein on radionuclides is provided for process description purposes only.

This bound document contains a total of 6 sheets.

REV	DATE	REASON FOR REVISION	PREPARER	CHECKER	APPROVER
0	9/30/03	Issued for Permitting Use			

Processed Data Entry | Copied QA | Approved | Filed

PLANT ITEM MATERIAL SELECTION DATA SHEET

Corrosion Considerations:

a General Corrosion
In the proposed pH operating range, little specific information was found for the general/uniform corrosion of stainless steels or other material in the given waste. Typically, the austenitic and higher alloy steels are expected to have corrosion rates of less than about 4 mpy in HNO_3 at the maximum temperature. This lack of data is not critical because the alloys needed for the system typically fail by pitting, crevice corrosion, or cracking.

Hamner (1981) lists both 304L and 316L as < 2 mpy at temperatures up to 150°F. Based on estimates from Cole (1974), corrosion rates for all of the concentrations <4 M and at temperatures to boiling, corrosion rates of less that 1 mpy should be expected. Corrosion rates above 150-212°F may be excessive and a more resistant alloy would be needed if exposure were excessive. It is assumed that such exposure will be minimal.

Conclusion: Under the stated conditions, 304L is expected to be sufficiently resistant to the waste solution with a probable general corrosion rate of less than 1 mpy at up to 150-212°F.

b Pitting Corrosion
Chloride is notorious for causing pitting in acid and neutral solutions. It is thought that in alkaline solutions, pH>12, chlorides are likely to promote pitting only in tight crevices. At pH < 12, chloride can be a concern. Revie (2000) and Uhlig (1948) both note that the nitric acid will have a mitigating effect on the effect of chloride. To what extent that occurs is unknown. The literature shows that in 8 M nitric, 3000 ppm chloride is permissible; it is assumed that in ≤1 M acid, the allowable amount of chloride is much less. The nitric is assumed to have no effect.

The fluoride is nearly counteracted by the presence of aluminum so it shouldn't increase the corrosion to a significant degree.

Based on data published by Allegheny Ludlum, even 6% Mo alloy is acceptable below about 150°F for the stated conditions of pH 0. These data do not consider the effects of nitrate, nitrite, or sulfate.

Conclusions
Due to the uncertainties of the effect of nitrate, 304L is not acceptable. Uncertainties in the flushing procedure make 316L marginal. Therefore, under the stated operating conditions, the recommended selection is 6% Mo.

c End Grain Corrosion
Not believed to be applicable to this system.

Conclusion:
Not applicable to this system.

d Stress Corrosion Cracking
The exact amount of chloride required to stress corrosion crack stainless steel is unknown. In part, this is because the amount varies with temperature, metal sensitization, and the environment. It is also unknown because chloride tends to concentrate under heat transfer conditions, by evaporation, and electrochemically during a corrosion process. Hence, even as little as a few ppm can lead to cracking under some conditions. Generally, as seen in Sedriks (1996) and Davis (1987), stress corrosion cracking does not usually occur below about 104°F. Further, the use of "L" grade stainless reduces the opportunity for sensitization to cracking.

With the given chloride concentration and temperature, an alloy better than 304L or 316L is required. Though a 6% Mo alloy is susceptible to SCC, its threshold temperature is expected to be above 150°F. No cracking of the 6% Mo is expected at the normal operating temperatures.

Conclusions:
6% Mo is recommended.

e Crevice Corrosion
See Pitting.

Conclusion:
See Pitting

PLANT ITEM MATERIAL SELECTION DATA SHEET

f Corrosion at Welds
Corrosion at welds is a potential problem in the proposed environment. Heat tint should be removed if darker than straw yellow.

Conclusion:
Weld corrosion is not a potential problem for this system if fabricated properly.

g Microbiologically Induced Corrosion (MIC)
The proposed operating conditions are not suitable for MIC.

Conclusion:
MIC is not considered a problem.

h Fatigue/Corrosion Fatigue
Corrosion fatigue is a not expected to be a concern.

Conclusions
Not believed to be a concern.

i Vapor Phase Corrosion
There is a possibility of high temperature acid being present in the vapor but the exposure times are expected to be short and infrequent.

Conclusion:
Vapor phase corrosion is possible but not expected likely and is not a concern in this vessel.

j Erosion
Velocities within the vessel are unknown but should generally be small.

Conclusion:
Not considered to be a problem.

k Galling of Moving Surfaces
Not applicable.

Conclusion:
Not applicable.

l Fretting/Wear
No contacting surfaces expected.

Conclusion:
Not applicable.

m Galvanic Corrosion
No dissimilar metals are present.

Conclusion:
None anticipated

n Cavitation
None expected.

Conclusion:
Not believed to be of concern.

o Creep
The temperatures are too low to be a concern.

Conclusion:
Not applicable.

PLANT ITEM MATERIAL SELECTION DATA SHEET

References:

1. deleted
2. deleted
3. Cole, HS, 1974, *Corrosion of Austenitic Stainless Steel Alloys Due to HNO_3 – HF Mixtures*, ICP-1036, Idaho Chemical Programs - Operations Office, Idaho Falls, ID
4. Davis, JR (Ed), 1987, *Corrosion, Vol 13*, In "Metals Handbook", ASM International, Metals Park, OH 44073
5. deleted
6. Hamner, NE, 1981, *Corrosion Data Survey*, Metals Section, 5th Ed, NACE International, Houston, TX
7. Revie, WW, 2000. *Uhlig's Corrosion Handbook*, 2nd Edition, Wiley-Interscience, New York, NY 10158
8. Sedriks, AJ, 1996, *Corrosion of Stainless Steels*, John Wiley & Sons, Inc., New York, NY 10158
9. Uhlig, HH, 1948, *Corrosion Handbook*, John Wiley & Sons, New York, NY 10158

Bibliography:

1. Agarwal, DC, *Nickel and Nickel alloys*, In: Revie, WW, 2000. *Uhlig's Corrosion Handbook*, 2nd Edition, Wiley-Interscience, New York, NY 10158
2. Boschen, Steve, http://www.al6xn.com/images/stainlessguide.pdf
3. Davis, JR (Ed), 1994, *Stainless Steels*, In ASM Metals Handbook, ASM International, Metals Park, OH 44073
4. Jones, RH (Ed.), 1992, *Stress-Corrosion Cracking*, ASM International, Metals Park, OH 44073
5. deleted
6. Phull, BS, WL Mathay, & RW Ross, 2000, *Corrosion Resistance of Duplex and 4-6% Mo-Containing Stainless Steels in FGD Scrubber Absorber Slurry Environments*, Presented at Corrosion 2000, Orlando, FL, March 26-31, 2000, NACE International, Houston TX 77218.
7. Van Delinder, LS (Ed), 1984, *Corrosion Basics*, NACE International, Houston, TX 77084
8. Wilding, MW and BE Paige, 1976, *Survey on Corrosion of Metals and Alloys in Solutions Containing Nitric Acid*, ICP-1107, Idaho Chemical Programs, Idaho National Engineering Laboratory, Idaho Falls, ID,

PLANT ITEM MATERIAL SELECTION DATA SHEET
OPERATING CONDITIONS

deleted

Materials Selection Data

Component (Name/ID) HLP-BRKPT-00004
System HLP

Operations

Chemicals	Unit	Cold Startup	Normal Operation*		Standby/Idle	Cleaning	Accident
Stream			CNP12	(deleted)			
Aluminum	g/l		2.2E+00				
Chloride	g/l		4.3E-01				
Fluoride	g/l		5.7E-01				
Hydroxide	g/l		0.0E+00				
Iron	g/l		1.8E-01				
Nitrate	g/l		4.4E+02				
Nitrite	g/l		0.0E+00				
Phosphate	g/l		1.2E+00				
TOC♀	g/l		0.0E+00				
Sulfate	g/l		3.1E-01		N/A	N/A	N/A
Undissolved solids	g/l		0.0E+00				
Particle size/hardness	µm (##)		N/A				
Other (Hg)	g/l		1.4E-04				
Carbonate	g/l		6.7E-02				
pH	-		0				
Dose rate, α, β/γ (inside)	Rad		N/A				
Temperature	°F		122				
Velocity	fps		N/A				
Vibration			N/A				
Time of exposure	#		10				

* Based on Contract Maximum Chemical A/D run at 60/6

- % of total; ## - use Mho scale

These values are based on the expected concentrations that would be transferred from the evaporators

Notes:
High pressure steam is received in the breakpots.

Comments: Process engineering input only.

[X] Black Cell

[X] Flushing

♀ List expected organic species:
Use maximum of 2 significant figures

N/A = Information not available or not in the Process Engineering Scope.

Revised: 9

PLANT ITEM MATERIAL SELECTION DATA SHEET
OPERATING CONDITIONS

deleted

Materials Selection Data

Component (Name/ID) HLP-BRKPT-00006
System HLP

Operations

Chemicals	Unit	Cold Startup	Normal Operation*		Standby/Idle	Cleaning	Accident
Stream			CNP12	(deleted)			
Aluminum	g/l		2.2E+00		N/A	N/A	N/A
Chloride	g/l		4.3E-01				
Fluoride	g/l		5.7E-01				
Hydroxide	g/l		0.0E+00				
Iron	g/l		1.8E-01				
Nitrate	g/l		4.4E+02				
Nitrite	g/l		0.0E+00				
Phosphate	g/l		1.2E+00				
TOC♀	g/l		0.0E+00				
Sulfate	g/l		3.1E-01				
Undissolved solids	g/l		0.0E+00				
Particle size/hardness	µm (##)		N/A				
Other (Hg)	g/l		1.4E-04				
Carbonate	g/l		6.7E-02				
pH	-		0				
Dose rate, α, β/γ (inside)	Rad		N/A				
Temperature	°F		122				
Velocity	fps		N/A				
Vibration			N/A				
Time of exposure	#		10				

* Based on Contract Maximum Chemical A/D run at 60/6

- % of total; ## - use Mho scale

These values are based on the expected concentrations that would be transferred from the evaporators

Notes:
High pressure steam is received in the breakpots.

Comments: Process engineering input only.

[X] Black Cell

[X] Flushing

♀ List expected organic species:
Use maximum of 2 significant figures

N/A = Information not available or not in the Process Engineering Scope.

PLANT ITEM MATERIAL SELECTION DATA SHEET

R10591354

HLP-VSL-00022 (PTF)
HLW Feed Receipt Vessel

- Design Temperature (°F) (max/min): 215/40
- Design Pressure (psig) (max/min): 15/-4.5
- Location: incell
- PJM Discharge Velocity (fps): 26
- Drive Cycle: 33 % (at 26 fps)

Related Plant Items

HLP-PJM-00056 – HLP-PJM-00057
HLP-PJM-00084 – HLP-PJM-00093

ISSUED BY
HPP-WTP PDC

Contents of this document are Dangerous Waste Permit affecting

Operating conditions are as stated on sheets 6 and 7

Operating Modes Considered:

- Normal operating conditions
- The vessel will be cleaned using process condensate, 2M NaOH or 2 M HNO_3 with residual chlorides and fluorides at 113 °F. The condition of high temperature and acid is not examined.

Materials Considered:

Material (UNS No.)	Relative Cost	Acceptable Material	Unacceptable Material
Carbon Steel	0.23		X
304L (S30403)	1.00		X
316L (S31603)	1.18	X	
6% Mo (N08367/N08926)	7.64	X	
Alloy 22 (N06022)	11.4	X	
Ti-2 (R50400)	10.1		X

Recommended Material: 316 (max 0.030% C; dual certified)

Recommended Corrosion Allowance: 0.040 inch (includes 0.024 inch corrosion allowance and 0.016 inch general erosion allowance; localized protection is required as discussed in section j)

Process & Operations Limitations:

- Develop rinsing/flushing procedure for acid and water

STEVEN WAKEMAN VAIL
STATE OF WASHINGTON
39250
REGISTERED PROFESSIONAL ENGINEER
EXPIRES: 12/07/07

11/15/05

Please note that source, special nuclear and byproduct materials, as defined in the Atomic Energy Act of 1954 (AEA), are regulated at the U.S. Department of Energy (DOE) facilities exclusively by DOE acting pursuant to its AEA authority. DOE asserts, that pursuant to the AEA, it has sole and exclusive responsibility and authority to regulate source, special nuclear, and byproduct materials at DOE-owned nuclear facilities. Information contained herein on radionuclides is provided for process description purposes only.

This bound document contains a total of 7 sheets.

REV	DATE	REASON FOR REVISION	PREPARER	CHECKER	APPROVER
1	11/15/05	Issued for Permitting Use			
0	9/25/03	Issued for Permitting Use	DLA	JRD	APR

PLANT ITEM MATERIAL SELECTION DATA SHEET

Corrosion Considerations:

This vessel receives Tank Farm waste having a temperature or solids content above acceptable levels for the waste feed receipt vessels (FRP-VSL-00002A/B/C/D). The vessel is equipped with a cooling jacket to keep the temperature at 113°F or below.

a General Corrosion
Hamner (1981) lists a corrosion rate for 304 (and 304L) in NaOH of less than 20 mpy (500 μm/y) at 77°F and over 20 mpy at 122°F. He states 316 (and 316L) has a rate of less than 2 mpy in 50% NaOH at temperatures up to 122°F. Dillon (2000) and Sedriks (1996) both state that the 300 series are acceptable in up to 50% NaOH at temperatures of about 122°F. Davis (1994) states the corrosion rate for 304L in pure NaOH will be less than about 1 mpy up to about 212°F though Sedriks states the data beyond about 122°F are incorrect. Danielson & Pitman (2000), based on short term studies, suggest a corrosion rate of about 0.5 mpy for 316L in simulated waste at boiling, >212°F. Studies have shown that in simulated waste at 140°F, 304L, with a corrosion rate < 1 mpy, performed slightly better than 316L – possibly due to the presence of nitrate. In this system, the hydroxide concentrations and temperatures are such that 304L stainless steel will be acceptable. If the alkaline waste reaches boiling, other work suggests that 304L would be acceptable, probably due to the presence of nitrate. Normally a high nickel alloy such as Inconel 600 would be required for hot caustic.

Wilding and Paige (1976) have shown that in 5% nitric acid with 1000 ppm fluoride at 290°F, the corrosion rate of 304L can be kept as low as 5 mpy by the use of Al^{+++}. Additionally, Sedriks (1996) has noted with 10% (≈2N) nitric acid and 3,000 ppm fluoride at 158°F, the corrosion rate of 304L is over 4,000 mpy. Therefore, there is a concern about excessive corrosion rates during acid cleaning unless the fluoride is well inhibited. Keeping the vessel as cool as possible, below 100°F, would reduce the extent of attack by chloride (pitting and crevice corrosion) and, and with the addition of Al^{+++}, general corrosion due to fluoride. 304L will be suitable if properly protected by temperature and fluoride complexants such as Al^{+++}. The less control of the acid conditions, the more consideration that will have to be given to more corrosion resistant alloys.

Conclusion:
At temperatures less than about 140°F, 304L is expected to be sufficiently resistant to the waste solution with a probable general corrosion rate of less than 1 mpy. Even considering acid cleaning, 316L will be acceptable if rinsing procedure is developed to reduce the effects of fluoride during acid conditions

b Pitting Corrosion
Chloride is known to cause pitting of stainless steel and related alloys in acid and neutral solutions. Dillon (2000) is of the opinion that in alkaline solutions, pH>12, chlorides are likely to promote pitting only in tight crevices. Dillon and Koch (1995) are both of the opinion that fluoride will have little effect in an alkaline media. Jenkins (2000) has stated that localized corrosion can occur under the waste deposits on heat transfer surfaces, probably due to the chlorides. Further, Revie (2000) and Uhlig (1948) note nitrate inhibits chloride pitting.

Normally the vessel is to operate at 113°F. At the normal temperature, based on the work of Zapp (1998) and others, 304L stainless steel would be acceptable in the proposed alkaline conditions at the upper pH values. The condition of solids and deposits present during possible acid cleaning means that 316L is the lowest alloy to be used. Even then, flushing will be required.

If the vessel were filled with process water and left stagnant, there would be a tendency to pit. The time to initiate would depend on the source of the water, being shorter for filtered river water, which tends to be dirtier, and longer for DIW. Pitting has been observed in both cases, and is likely because residual chlorides are likely to remain and to concentrate.

Conclusion:
Based on the expected operating conditions, 316L is expected to be satisfactory at the stated operating temperature and if the pH is neutral or higher and if the duration and extent of possible low pH off-normal conditions and acid cleaning are controlled.

c End Grain Corrosion
End grain corrosion only occurs in metal with exposed end grains and in highly oxidizing acid conditions.

Conclusion:
Not believed likely in this system.

d Stress Corrosion Cracking
The exact amount of chloride required to cause stress corrosion cracking is unknown. In part this is because the amount varies with temperature, metal sensitization, and the environment, but also because chloride tends to concentrate under heat transfer conditions, by evaporation, and electrochemically during a corrosion process. Hence, even as little as 10 ppm can lead to cracking under some conditions. Generally, as seen in Sedriks (1996) and Davis (1987), stress corrosion cracking does not usually occur below about 140°F. With the stated low operating temperature and alkaline conditions, 304L is expected to be satisfactory. However, because of the possibility of acid cleaning, 316 L will be the minimum acceptable alloy.

Conclusion:
The minimum alloy recommended is a 316L stainless steel.

PLANT ITEM MATERIAL SELECTION DATA SHEET

e Crevice Corrosion
See Pitting

Conclusion:
See Pitting

f Corrosion at Welds
Corrosion at welds is not considered a problem in the proposed environment.

Conclusion:
Weld corrosion is not considered a problem for this system.

g Microbiologically Induced Corrosion (MIC)
The proposed operating conditions are not conducive to microbial growth – the temperature is approximately correct but the pH is generally too alkaline. The use of untreated process water may be a concern. The use of DIW is recommended.

Conclusion:
MIC is not considered a problem.

h Fatigue/Corrosion Fatigue
Corrosion fatigue is a not expected to be a problem.

Conclusions
Typically not a problem.

i Vapor Phase Corrosion
The vapor phase portion of the vessel is expected to be contacted with particles of waste from splashing. It is unknown whether the vessel, and particularly the lid, will be sufficiently washed or whether residual acids or solids will be present. In the former case, 304L would be satisfactory. If solids or acids and solids are present, a 316L or better is preferred.

Conclusion:
316L is recommended.

j Erosion
Based on past experiments by Smith & Elmore (1992), the solids are soft and erosion is not expected to be a concern for the vessel wall. Based on 24590-WTP-RPT-M-04-0008, a general erosion allowance of 0.016 inch is adequate for components with maximum solids content up to 27.3 wt%. Additional 316L stainless steel should be provided as localized protection for the applicable portions of the bottom head to accommodate PJM discharge velocities of up to 8 m/s with solids concentrations of 26.46 wt% for a usage of 100 % operation as documented in 24590-WTP-M0E-50-00003. HLP-VSL-00022 requires at least 0.398-inch additional protection. The 26.46 wt% is considered to be conservative and is based on the WTP Prime Contract maximum. During normal operation, the solids content of HLP-VSL-00022 is expected to be well below the anticipated maximum.

The wear of the PJM nozzles can occur from flow for both the discharge and reflood cycles of operation. At least 0.357–inch of additional 316L stainless steel should be provided on the inner surface of the PJM nozzle to accommodate wear due to PJM discharge and suction velocities with solids concentrations of 26.46 wt% for usage of 100 % operation as documented in 24590-WTP-M0E-50-00003.

Conclusion:
The recommended corrosion allowance provides sufficient protection for erosion of the vessel wall. Additional localized protection for the bottom head will accommodate PJM discharge velocities and for the PJM nozzles will accommodate PJM discharge and reflood velocities.

k Galling of Moving Surfaces
No moving surfaces within the vessel.
Conclusion:
Not applicable.

l Fretting/Wear
No contacting surfaces expected.

Conclusion:
Not applicable.

m Galvanic Corrosion
No dissimilar metals are present.

Conclusion:
Not applicable.

PLANT ITEM MATERIAL SELECTION DATA SHEET

n Cavitation
None expected.

Conclusion:
Not believed to be of concern.

o Creep
The temperatures are too low to be a concern.

Conclusion:
Not applicable.

p Inadvertent Nitric Acid Addition
Higher chloride contents and higher temperatures usually require higher alloy materials. Nitrate ions inhibit the pitting and crevice corrosion of stainless alloys. Furthermore, nitric acid passivates these alloys; therefore, lower pH values brought about by increases in the nitric acid content of process fluid will not cause higher corrosion rates for these alloys. The upset condition that was most likely to occur is lowering of the pH of the vessel content by inadvertent addition of 0.5 M nitric acid. Lowering of pH may make a chloride-containing solution more likely to cause pitting of stainless alloys. Increasing the nitric acid content of the process fluid adds more of the pitting-inhibiting nitrate ion to the process fluid. In addition, adding the nitric acid solution to the stream will dilute the chloride content of the process fluid.

Conclusion:
The recommended materials will be able to withstand a plausible inadvertent addition of 0.5 M nitric acid for a limited period.

PLANT ITEM MATERIAL SELECTION DATA SHEET

References:

1. 24590-WTP-M0E-50-00003, *Wear Allowance for WTP Waste Slurry Systems*
2. 24590-WTP-RPT-M-04-0008, Rev. 2, *Evaluation Of Stainless Steel Wear Rates In WTP Waste Streams At Low Velocities*
3. 24590-WTP-RPT-PR-04-0001, Rev. B, *WTP Process Corrosion Data*
4. CCN 097795, Jenkins, CF. SRTC, teleconference with JR Divine, RPP-WTP, 16 February, 2000.
5. CCN 130173, Dillon, CP (Nickel Development Institute), Personal Communication to J R Divine (ChemMet, Ltd., PC), 3 Feb 2000.
6. CCN 130174, Divine, J. R. and W. C. Carlos, 1992, *Assessment of Known Degradation and Existing Corrosion Studies on Steel*, Presented at the High-Level Waste Tank Systems Structural Integrity Workshop, February 19-20, 1992, Richland, Washington
7. Danielson, MJ & SG Pitman, 2000, *Corrosion Tests of 316L and Hastelloy C-22 in Simulated Tank Waste Solutions*, PNWD-3015 (BNFL-RPT-019, Rev 0), Pacific Northwest Laboratory, Richland WA.
8. Davis, JR (Ed), 1987, *Corrosion, Vol 13*, In "Metals Handbook", ASM International, Metals Park, OH 44073
9. Davis, JR (Ed), 1994, *Stainless Steels*, In ASM Metals Handbook, ASM International, Metals Park, OH 44073
10. Hamner, NE, 1981, *Corrosion Data Survey*, Metals Section, 5th Ed, NACE International, Houston, TX 77218
11. Koch, GH, 1995, *Localized Corrosion in Halides Other Than Chlorides*, MTI Pub No. 41, Materials Technology Institute of the Chemical Process Industries, Inc, St Louis, MO 63141
12. Revie, WW, 2000. *Uhlig's Corrosion Handbook*, 2nd Edition, Wiley-Interscience, New York, NY 10158
13. Sedriks, AJ, 1996, *Corrosion of Stainless Steels*, John Wiley & Sons, Inc., New York, NY 10158
14. Smith, H. D. and M. R. Elmore, 1992, Corrosion Studies of Carbon Steel under Impinging Jets of Simulated Slurries of Neutralized Current Acid Waste (NCAW) and Neutralized Cladding Removal Waste (NCRW), PNL-7816, Pacific Northwest Laboratory, Richland, Washington.
15. Uhlig, HH, 1948, *Corrosion Handbook*, John Wiley & Sons, New York, NY 10158
16. Wilding, MW and BE Paige, 1976, *Survey on Corrosion of Metals and Alloys in Solutions Containing Nitric Acid*, ICP-1107, Idaho National Engineering Laboratory, Idaho Falls, ID
17. Zapp, PE, 1998, *Preliminary assessment of Evaporator Materials of Construction*, BNF—003-98-0029, Rev 0, Westinghouse Savannah River Co., Inc for BNFL Inc.

Bibliography:

1. CCN 130170, Blackburn, LD to PG Johnson, Internal Memo, Westinghouse Hanford Co, *Evaluation of 240-AR Chloride Limit*, August 15, 1991.
2. CCN 130171, Ohl, PC to PG Johnson, Internal Memo, Westinghouse Hanford Co, *Technical Bases for Cl- and pH Limits for Liquid Waste Tank Cars*, MA: PCO:90/01, January 16, 1990.
3. CCN 130172, Divine, JR, 1986, Letter to A.J. Diliberto, *Reports of Experimentation*, Battelle, Pacific Northwest Laboratories, Richland, WA 99352
4. Agarwal, DC, *Nickel and Nickel Alloys*, In: Revie, WW, 2000. *Uhlig's Corrosion Handbook*, 2nd Edition, Wiley-Interscience, New York, NY 10158
5. Berhardsson, S, R Mellstrom, and J Oredsson, 1981, *Properties of Two Highly corrosion Resistant Duplex Stainless Steels*, Paper 124, presented at Corrosion 81, NACE International, Houston, TX 77218
6. Jones, RH (Ed.), 1992, *Stress-Corrosion Cracking*, ASM International, Metals Park, OH 44073
7. Phull, BS, WL Mathay, & RW Ross, 2000, *Corrosion Resistance of Duplex and 4-6% Mo-Containing Stainless Steels in FGD Scrubber Absorber Slurry Environments*, Presented at Corrosion 2000, Orlando, FL, March 26-31, 2000, NACE International, Houston TX 77218.
8. Van Delinder, LS (Ed), 1984, *Corrosion Basics*, NACE International, Houston, TX 77084

PLANT ITEM MATERIAL SELECTION DATA SHEET

24590-WTP-RPT-PR-04-0001, Rev. B
WTP Process Corrosion Data

PROCESS CORROSION DATA SHEET

Component(s) (Name/ID #) HLW feed receipt vessel (HLP-VSL-00022)

Facility PTF

In Black Cell? Yes

Chemicals	Unit[1]	Contract Max		Non-Routine		Notes
		Leach	No leach	Leach	No Leach	
Aluminum	g/l	2.97E+01	3.01E+01			
Chloride	g/l	7.84E-01	7.84E-01			
Fluoride	g/l	2.12E-01	2.12E-01			
Iron	g/l	5.72E+01	5.72E+01			
Nitrate	g/l	7.14E+01	7.14E+01			
Nitrite	g/l	6.09E+00	6.09E+00			
Phosphate	g/l	8.51E+00	8.51E+00			
Sulfate	g/l	2.12E+00	2.12E+00			
Mercury	g/l	1.97E-01	1.97E-01			
Carbonate	g/l	9.98E+01	9.98E+01			
Undissolved solids	wt%	26.46%	26.46%			
Other (NaMnO4, Pb,...)	wt%					
Other	g/l					
pH	N/A					Note 3
Temperature	°F					Note 2

List of Organic Species:

References

System Description: 24590-PTF-3YD-HLP-00001, Rev 0
Mass Balance Document: 24590-WTP-M4C-V11T-00005, Rev A
Normal Input Stream #: FRP14, HLP12
Off Normal Input Stream # (e.g., overflow from other vessels): N/A
P&ID:
PFD: 24590-PTF-M5-V17T-P0007, Rev 0
Technical Reports:

Notes:

1. Concentrations less than 1×10^{-4} g/l do not need to be reported; list values to two significant digits max.
2. T operation mode 1: 113 °F to 190 °F, T operation mode 2: 88 °F to 86 °F (24590-MVC-HLP-00001, Rev 0)
3. pH approximately 13 to 14

Assumptions:

PLANT ITEM MATERIAL SELECTION DATA SHEET

4.6.2 HLW Feed Receipt Vessel (HLP-VSL-00022)

Routine Operations

High-level waste feed from the Tank Farms is received into the HLW feed receipt vessel (HLP-VSL-00022). Tank Farm waste that has a temperature or solids content above the criteria for vessels FRP-VSL-00002A/B/C/D, which receive LAW waste from tank farms, can be sent to vessel HLP-VSL-00022. Once receipt is complete, sampling for confirmation of waste acceptance will begin. Sampling for criticality is required for HLW feed receipt. The HLW feed is sampled for waste concentration. The waste concentrations must be below the acceptable criticality limits. The vessels are equipped with cooling jackets to maintain the temperature at or below 113 °F. During this staging period, PJMs will operate to provide sufficient mixing within the vessels, and the recirculation pump will run to maintain a flooded suction line. When required, HLW feed will be transferred for processing. HLW feed may be fed to one of three systems for processing: 1) the waste feed evaporation process system (FEP), 2) the ultrafiltration process system (UFP), or 3) the waste feed receipt process system (FRP), for evaporation, filtration, or blending, respectively. This will be determined by the current plant status and will be evaluated on a case-by-case basis during plant operations.

Non-Routine Operations that Could Affect Corrosion/Erosion

This vessel overflows to PWD-VSL-00033.

There is also the option to return HLW feed from the HLW feed receipt vessel back to the Tank Farms via the waste feed return pump, FRP-PMP-00001, in system FRP. This is the case when the HLW feed does not meet the requirements of the specification for HLW feed. However, this is considered an infrequent event.

VESSEL/TANK MATERIAL SELECTION DATA SHEET

R10184395

HLP-VSL-00027A&B (PTF)
HLW Lag Storage Vessel

- Design Temperature (°F)(Max/min). 237/40
- Design Pressure (psig) (Max/min): 15/-8
- Location: incell
- PJM Discharge Velocity (fps) (max)· 40
- Drive Cycle: 25 %

Off spring items

HLP-PJM-00060 – HLP-PJM-00075

ISSUED BY
RPP-WTP PDC
1-7-04
INIT DATE

Contents of this document are Dangerous Waste Permit affecting

Operating conditions are as stated on sheet 5

Operating Modes Considered:

- Normal operating conditions
- the vessel is alkaline at the maximum design temperature,
- the vessel will be cleaned using 2 N HNO_3 with residual chlorides and fluorides at normal operating temperatures; the condition of high temperature and acid is not examined,

Materials Considered:

Material (UNS No.)	Relative Cost	Acceptable Material	Unacceptable Material
Carbon Steel	0.23		X
304L (S30403)	1.00		X
316L (S31603)	1.18	X	
6% Mo (N08367/N08926)	7.64	X	
Alloy 22 (N06022)	11.4	X	
Ti-2 (R50400)	10.1		X

Recommended Material: 316 (max 0.030% C; dual certified)

Recommended Corrosion Allowance: 0.04 inch

Process & Operations Limitations:

- Develop rinsing/flushing procedure for water and acid

STEVEN WAKEMAN VAIL
STATE OF WASHINGTON
39250
REGISTERED PROFESSIONAL ENGINEER
1/6/04
EXPIRES: 12/07/05

Please note that source, special nuclear and byproduct materials, as defined in the Atomic Energy Act of 1954 (AEA), are regulated at the U.S. Department of Energy (DOE) facilities exclusively by DOE acting pursuant to its AEA authority. DOE asserts, that pursuant to the AEA, it has sole and exclusive responsibility and authority to regulate source, special nuclear, and byproduct materials at DOE-owned nuclear facilities. Information contained herein on radionuclides is provided for process description purposes only.

This bound document contains a total of 5 sheets.

REV	DATE	REASON FOR REVISION	PREPARER	CHECKER	APPROVER
1	12/24/03	Issued for Permitting Use			APR
0	9/25/03	Issued for Permitting Use	DLA	JRD	APR

VESSEL/TANK MATERIAL SELECTION DATA SHEET

Corrosion Considerations:

a General Corrosion
Hamner (1981) lists a corrosion rate for 304 (and 304L) in NaOH of less than 20 mpy (500 μm/y) at 77°F and over 20 mpy at 122°F. He states 316 (and 316L) has a rate of less than 2 mpy in 50% NaOH at temperatures up to 122°F. Sedriks (1996) states that the 300 series are acceptable in up to 50% NaOH at temperatures of about 122°F Davis (1994) states the corrosion rate for 304L in pure NaOH will be less than about 1 mpy up to about 212°F though Sedriks states the data beyond about 122°F are incorrect. Danielson & Pitman (2000), based on short term studies, suggest a corrosion rate of about 0.5 mpy for 316L in simulated waste at boiling, >212°F. In simulated waste at 140°F, 304L, with a corrosion rate < 1 mpy, performed slightly better than 316L – possibly due to the presence of nitrate. In this system, the hydroxide concentrations and temperatures are such that 304L stainless steel will be acceptable. If the alkaline waste reaches boiling, Zapp's work (1998) suggests 304L would be acceptable, probably due to the presence of nitrate.

Wilding and Paige (1976) have shown that in 5% nitric acid with 1000 ppm fluoride at 290°F, the corrosion rate of 304L can be kept as low as 5 mpy by the use of Al^{+++}. Additionally, Sedriks (1996) has noted with 10% (≈2N) nitric acid and 3,000 ppm fluoride at 158°F, the corrosion rate of 304L is over 4,000 mpy. There is no Al^{+++} present. Therefore, there is a concern about excessive corrosion rates during acid cleaning unless the fluoride is well diluted. Acid cleaning should not be performed at elevated temperatures in order to reduce the extent of attack by chloride (pitting and crevice corrosion). 304L will be suitable if properly protected by temperature and fluoride complexants such as Al^{+++}.

Conclusion:
At the normal operating temperature, 304L is expected to be sufficiently resistant to the waste solution with a probable general corrosion rate of less than 1 mpy. Operation at the design temperature under alkaline conditions is also acceptable. At acid or neutral pH, the temperature should be kept below about 120°F.

b Pitting Corrosion
Chloride is known to cause pitting of stainless steel and related alloys in acid and neutral solutions. It is thought that in alkaline solutions, pH>12, chlorides are likely to promote pitting only in tight crevices. Koch (1995) is both of the opinion that fluoride will have little effect in an alkaline media. Jenkins has stated that localized corrosion can occur under the waste deposits on heat transfer surfaces, probably due to the chlorides. Further, Revie (2000) and Uhlig (1948) note nitrate inhibits chloride pitting.

Normally the vessel is to operate at 100°F. At the normal temperature, based on the work of Zapp (1998) and others, 304L stainless steel would be acceptable in the proposed alkaline conditions at the upper pH values. Under acidic or neutral pH conditions, a more pitting resistant alloy, such as 316L, will be needed. If the duration of exposure to acidic conditions and lowered pH can be controlled, 316L will be acceptable.

If the vessel were filled with process water and left stagnant, there would be a tendency to pit. The time to initiate would depend on the source of the water, being shorter for filtered river water, which tends to be dirtier, and longer for DIW. Pitting has been observed in both cases, and is likely because residual chlorides are likely to remain and to concentrate.

Conclusion:
Based on the expected operating conditions, 316L is expected to be satisfactory.

c End Grain Corrosion
End grain corrosion only occurs in metal with exposed end grains and in highly oxidizing acid conditions.

Conclusion:
Not believed likely in this system.

d Stress Corrosion Cracking
The exact amount of chloride required to cause stress corrosion cracking is unknown. In part this is because the amount varies with temperature, metal sensitization, and the environment, but also because chloride tends to concentrate under heat transfer conditions, by evaporation, and electrochemically during a corrosion process. Hence, even as little as 10 ppm can lead to cracking under some conditions. Generally, as seen in Sedriks (1996) and Davis (1987), stress corrosion cracking does not usually occur below about 104°F. With the stated low operating temperature and alkaline conditions, 304L is expected to be satisfactory. If acid cleaning is performed, 316L is recommended for additional protection. Even with 316L, acid cleaning at the design temperature is not recommended without a thorough water flush prior to acid addition.

Conclusion:
Because of the operating environment that can occur during cleaning, the minimum alloy recommended is a 316L stainless steel.

e Crevice Corrosion
See Pitting

Conclusion:
See Pitting

f Corrosion at Welds
Other than pitting or crevice corrosion, corrosion at welds is not considered a problem in the proposed environment. Heat tint is normally not a consideration in alkaline conditions.

Conclusion:
Weld corrosion is not considered a problem for this system.

VESSEL/TANK MATERIAL SELECTION DATA SHEET

g Microbiologically Induced Corrosion (MIC)
The proposed operating conditions are not conducive to microbial growth – the temperature is approximately correct but the pH is generally too alkaline.

Conclusion
MIC is not considered a problem if the chemistry of the process water is controlled.

h Fatigue/Corrosion Fatigue
Corrosion fatigue is a not expected to be a problem.

Conclusions
Not a concern.

i Vapor Phase Corrosion
The vapor phase portion of the vessel is expected to be contacted with particles of waste from splashing. It is unknown whether the vessel, and particularly the lid, will be sufficiently washed or whether residual acids or solids will be present. If solids or acids and solids are present, a 316L or better is preferred.

Conclusion:
Vapor phase corrosion is not a concern.

j Erosion
Based on past experiments by Smith & Elmore (1992), the solids in the waste are soft and erosion is not expected to be a concern for the vessel wall. Additional localized protection will be provided as required to protect the vessel shell to accommodate PJM discharge velocities of up to 40 feet per second.

Conclusion. The recommended corrosion allowance provides sufficient protection for erosion of the vessel wall, assuming adequate protection is provided to accommodate PJM discharge flow.

k Galling of Moving Surfaces
Not applicable.

Conclusion:
Not applicable

l Fretting/Wear
No contacting surfaces expected.

Conclusion:
Not applicable.

m Galvanic Corrosion
No dissimilar metals are present.

Conclusion:
Not applicable.

n Cavitation
None expected.

Conclusion:
Not believed to be of concern.

o Creep
The temperatures are too low to be a concern.

Conclusion:
Not applicable.

VESSEL/TANK MATERIAL SELECTION DATA SHEET

References:

1 Danielson, MJ & SG Pitman, 2000, *Corrosion Tests of 316L and Hastelloy C-22 in Simulated Tank Waste Solutions*, PNWD-3015 (BNFL-RPT-019, Rev 0), Pacific Northwest Laboratory, Richland WA.
2 Davis, JR (Ed), 1987, *Corrosion, Vol 13*, In "Metals Handbook", ASM International, Metals Park, OH 44073
3 Davis, JR (Ed), 1994, *Stainless Steels*, In ASM Metals Handbook, ASM International, Metals Park, OH 44073
4 Hamner, NE, 1981, *Corrosion Data Survey*, Metals Section, 5th Ed, NACE International, Houston, TX 77218
5 Koch, GH, 1995, *Localized Corrosion in Halides Other Than Chlorides*, MTI Pub No. 41, Materials Technology Institute of the Chemical Process Industries, Inc, St Louis, MO 63141
6. Revie, WW, 2000. *Uhlig's Corrosion Handbook*, 2nd Edition, Wiley-Interscience, New York, NY 10158
7 Sedriks, AJ, 1996, *Corrosion of Stainless Steels*, John Wiley & Sons, Inc., New York, NY 10158
8. Smith, H. D. and M. R. Elmore, 1992, Corrosion Studies of Carbon Steel under Impinging Jets of Simulated Slurries of Neutralized Current Acid Waste (NCAW) and Neutralized Cladding Removal Waste (NCRW), PNL-7816, Pacific Northwest Laboratory, Richland, Washington.
9. Uhlig, HH, 1948, *Corrosion Handbook*, John Wiley & Sons, New York, NY 10158
10. Wilding, MW and BE Paige, 1976, *Survey on Corrosion of Metals and Alloys in Solutions Containing Nitric Acid*, ICP-1107, Idaho National Engineering Laboratory, Idaho Falls, ID
11. Zapp, PE, 1998, *Preliminary Assessment of Evaporator Materials of Construction*, BNF—003-98-0029, Rev 0, Westinghouse Savannah River Co., Inc for BNFL Inc.

Bibliography:

1. Agarwal, DC, *Nickel and Nickel alloys*, In: Revie, WW, 2000. *Uhlig's Corrosion Handbook*, 2nd Edition, Wiley-Interscience, New York, NY 10158
2 Berhardsson, S, R Mellstrom, and J Oredsson, 1981, *Properties of Two Highly corrosion Resistant Duplex Stainless Steels*, Paper 124, presented at Corrosion 81, NACE International, Houston, TX 77218
3. Divine, J. R. and W. C. Carlos, 1992, *Assessment of Known Degradation and Existing Corrosion Studies on Steel*, Presented at the High-Level Waste Tank Systems Structural Integrity Workshop, February 19-20, 1992, Richland, Washington
4. Jones, RH (Ed.), 1992, *Stress-Corrosion Cracking*, ASM International, Metals Park, OH 44073
5. Phull, BS, WL Mathay, & RW Ross, 2000, *Corrosion Resistance of Duplex and 4-6% Mo-Containing Stainless Steels in FGD Scrubber Absorber Slurry Environments*, Presented at Corrosion 2000, Orlando, FL, March 26-31, 2000, NACE International, Houston TX 77218.
6 Van Delinder, LS (Ed), 1984, *Corrosion Basics*, NACE International, Houston, TX 77084

VESSEL/TANK MATERIAL SELECTION DATA SHEET

OPERATING CONDITIONS

Material Selection Data Sheets for
The Pretreatment Facility

Materials Selection Data

Component (Name/ID) HLP-VSL-00027A/B
System HLP

Operations

Chemicals	Unit	Cold Startup	Normal Operation*	Standby/Idle	Cleaning	Accident
Aluminum	g/l	N/A	2.4E+01	N/A	N/A	N/A
Chloride	g/l		2.4E+00			
Fluoride	g/l		6.1E+00			
Hydroxide	g/l		9.5E-01			
Iron	g/l		2.9E+01			
Nitrate	g/l		6.1E+01			
Nitrite	g/l		8.5E+01			
Phosphate	g/l		6.1E+00			
TOC†	g/l		2.0E+01			
Sulfate	g/l		1.6E+00			
Undissolved solids	g/l		2.8E+02			
Particle size/hardness	µm (##)		N/A			
Other (Hg)	g/l		2.4E+00			
Carbonate	g/l		2.9E+01			
pH	-		1.3E+01			
Dose rate, α, β/γ (inside)	Rad		N/A			
Temperature	°C		3.8E+01			
Velocity	fps		N/A			
Vibration			N/A			
Time of exposure	#		1.0E+02			

* Based on Contract Maximum Chemical A/D run at 60/6

- % of total; ## - use Mho scale

Remarks: Stream HLP01

[X] Black Cell

[X] Flushing

† List expected organic species: N/A
Use maximum of 2 significant figures

N/A = Information not available or not in Process Engineering Scope

VESSEL/TANK MATERIAL SELECTION DATA SHEET

R10184394

HLP-VSL-00028 (PTF)
HLW Feed Blending Vessel

- Design Temperature (°F)(Max/min): 237/40
- Design Pressure (psig) (Max/min):15/-8
- Location: incell
- PJM Discharge Velocity (fps) (max): 40
- Drive Cycle: 25 %

Offspring Items

HLP-PJM-00076 -- HLP-PJM-00083

ISSUED BY
RPP-WTP PDC
1-7-04 LM
INIT DATE

Contents of this document are Dangerous Waste Permit affecting

Operating conditions are as stated on sheet 5

Options Considered:

- Normal operating conditions
- Acid cleaning

Materials Considered:

Material (UNS No.)	Relative Cost	Acceptable Material	Unacceptable Material
Carbon Steel	0.23		X
304L (S30403)	1.00		X
316L (S31603)	1.18	X	
6% Mo (N08367/N08926)	7.64	X	
Alloy 22 (N06022)	11.4	X	
Ti-2 (R50400)	10.1		X

Recommended Material: 316 (max 0.030% C; dual certified)

Recommended Corrosion Allowance: 0.04 inch

Process & Operations Limitations:

- Develop rinsing/flushing procedure for acid and water

STEVEN WAKEMAN VAIL
STATE OF WASHINGTON
39250
REGISTERED PROFESSIONAL ENGINEER
1/6/04
EXPIRES: 12/07/05

Please note that source, special nuclear and byproduct materials, as defined in the Atomic Energy Act of 1954 (AEA), are regulated at the U.S. Department of Energy (DOE) facilities exclusively by DOE acting pursuant to its AEA authority. DOE asserts, that pursuant to the AEA, it has sole and exclusive responsibility and authority to regulate source, special nuclear, and byproduct materials at DOE-owned nuclear facilities. Information contained herein on radionuclides is provided for process description purposes only.

This bound document contains a total of 5 sheets.

REV	DATE	REASON FOR REVISION	PREPARER	CHECKER	APPROVER
1	1/6/04	Issued for Permitting Use			
0	9/25/03	Issued for Permitting Use	DLA	JRD	APR

VESSEL/TANK MATERIAL SELECTION DATA SHEET

Corrosion Considerations:

a General Corrosion
Hamner (1981) lists a corrosion rate for 304 (and 304L) in NaOH of less than 20 mpy (500 μm/y) at 77°F and over 20 mpy at 122°F. He states 316 (and 316L) has a rate of less than 2 mpy in 50% NaOH at temperatures up to 122°F. Sedriks (1996) states that the 300 series are acceptable in up to 50% NaOH at temperatures of about 122°F. Davis (1987) states the corrosion rate for 304L in pure NaOH will be less than about 1 mpy up to about 212°F though Sedriks states the data beyond about 122°F are incorrect. Danielson & Pitman (2000), based on short term studies, suggest a corrosion rate of about 0.5 mpy for 316L in simulated waste at boiling, >212°F. In simulated waste at 140°F, 304L, with a corrosion rate < 1 mpy, performed slightly better than 316L – possibly due to the presence of nitrate. In this system, the hydroxide concentrations and temperatures are such that 304L stainless steel will be acceptable. If the alkaline waste reaches boiling, Zapp's work (1998) suggests 304L would be acceptable, probably due to the presence of nitrate.

Wilding and Paige (1976) have shown that in 5% nitric acid with 1000 ppm fluoride at 290°F, the corrosion rate of 304L can be kept as low as 5 mpy by the use of Al^{+++}. Additionally, Sedriks (1996) has noted with 10% (≈2N) nitric acid and 3,000 ppm fluoride at 158°F, the corrosion rate of 304L is over 4,000 mpy. There is substantial Al^{+++} present. Therefore, there is little concern about excessive corrosion rates unless acid cleaning is planned. In that case, the vessel must be thoroughly flushed prior to the addition of acid to assure the fluoride is well diluted. Keeping the vessel as cool as possible, below 100°F, would reduce the extent of attack by chloride (pitting and crevice corrosion). 304L will be marginally suitable if the stated temperature is maintained and if properly protected by fluoride complexants such as Al^{+++}. If acid conditions cannot be fully controlled, 316L is the minimum alloy suitable.

Conclusion:
Based on Zapp's work (1998), 304L is expected to be sufficiently resistant to the waste solution with a probable general corrosion rate of less than 1 mpy even to the design temperature. Because of the possibility of acid cleaning, in the presence of halides, 316L is the minimum alloy recommended.

b Pitting Corrosion
Chloride is known to cause pitting of stainless steel and related alloys in acid and neutral solutions. It is thought that in alkaline solutions, pH>12, chlorides are likely to promote pitting only in tight crevices. Koch (1995) is of the opinion that fluoride will have little effect in an alkaline media. Localized corrosion can occur under the waste deposits on heat transfer surfaces, probably due to the chlorides. Further, Revie (2000) and Uhlig (1948) note nitrate inhibits chloride pitting.

Normally the vessel is to operate at about 100°F. At the normal temperature, based on the work of Zapp (1998) and others, 304L stainless steel would be acceptable in the proposed alkaline conditions at the upper pH values. The presence of solids and deposits mean that 316L is the lowest alloy recommended. If the duration of exposure to acidic conditions and lowered pH can be controlled, by proper flushing procedures, it will be feasible to use 316L stainless steel.

If the vessel were filled with process water and left stagnant, there would be a tendency to pit. The time to initiate would depend on the source of the water, being shorter for filtered river water, which tends to be dirtier, and longer for DIW. Pitting has been observed in both cases, and is likely because residual chlorides are likely to remain and to concentrate.

Conclusion:
Based on the expected operating conditions, 316L is expected to be satisfactory.

c End Grain Corrosion
End grain corrosion only occurs in metal with exposed end grains and in highly oxidizing acid conditions.

Conclusion:
Not believed likely in this system.

d Stress Corrosion Cracking
The exact amount of chloride required to cause stress corrosion cracking is unknown. In part this is because the amount varies with temperature, metal sensitization, and the environment, but also because chloride tends to concentrate under heat transfer conditions, by evaporation, and electrochemically during a corrosion process. Hence, even as little as 10 ppm can lead to cracking under some conditions. Generally, as seen in Sedriks (1996) and Davis (1987), stress corrosion cracking does not usually occur below about 104°F. With the stated low operating temperature and alkaline conditions, 304L is expected to be satisfactory. However, because acid cleaning could be used, and because the operating temperature is at the upper end of the acceptable range, 316 L will be the minimum acceptable alloy.

Conclusion:
The minimum alloy recommended is a 316L stainless steel.

e Crevice Corrosion
See Pitting.

Conclusion:
See Pitting

VESSEL/TANK MATERIAL SELECTION DATA SHEET

f Corrosion at Welds
Other than pitting or crevice corrosion, corrosion at welds is not considered a problem in the proposed environment Heat tint is normally not a consideration in alkaline conditions.

Conclusion:
Weld corrosion is not considered a problem for this system.

g Microbiologically Induced Corrosion (MIC)
The proposed operating conditions are not conducive to microbial growth – the temperature is approximately correct but the pH is generally too alkaline. The use of process water may be a concern and untreated process water should not be used.

Conclusion:
MIC is not considered a problem if the chemistry of the process water is controlled

h Fatigue/Corrosion Fatigue
Corrosion fatigue is a not expected to be a problem.

Conclusions
Not a concern.

i Vapor Phase Corrosion
The vapor phase portion of the vessel is expected to be contacted with particles of waste from splashing. Since solids will possibly be present and acid wash is likely, 316L is recommended.

Conclusion:
Vapor phase corrosion is not a concern.

j Erosion
Based on past experiments by Smith & Elmore (1992), the solids in the waste are soft and erosion is not expected to be a concern for the vessel wall. Additional localized protection will be provided as required to protect the vessel shell to accommodate PJM discharge velocities of up to 40 feet per second.

Conclusion: The recommended corrosion allowance provides sufficient protection for erosion of the vessel wall, assuming adequate protection is provided to accommodate PJM discharge flow.

k Galling of Moving Surfaces
Not applicable.

Conclusion:
Not applicable.

l Fretting/Wear
No contacting surfaces expected.

Conclusion:
Not applicable.

m Galvanic Corrosion
No dissimilar metals are present.

Conclusion:
Not applicable.

n Cavitation
None expected.

Conclusion:
Not believed to be of concern.

o Creep
The temperatures are too low to be a concern.

Conclusion:
Not applicable.

VESSEL/TANK MATERIAL SELECTION DATA SHEET

References:

1. Danielson, MJ & SG Pitman, 2000, *Corrosion Tests of 316L and Hastelloy C-22 in Simulated Tank Waste Solutions*, PNWD-3015 (BNFL-RPT-019, Rev 0), Pacific Northwest Laboratory, Richland WA.
2. Davis, JR (Ed), 1987, *Corrosion, Vol 13*, In "Metals Handbook", ASM International, Metals Park, OH 44073
3. Hamner, NE, 1981, *Corrosion Data Survey*, Metals Section, 5th Ed, NACE International, Houston, TX 77218
4. Koch, GH, 1995, *Localized Corrosion in Halides Other Than Chlorides*, MTI Pub No. 41, Materials Technology Institute of the Chemical Process Industries, Inc, St Louis, MO 63141
5. Revie, WW, 2000. *Uhlig's Corrosion Handbook*, 2nd Edition, Wiley-Interscience, New York, NY 10158
6. Sedriks, AJ, 1996, *Corrosion of Stainless Steels*, John Wiley & Sons, Inc., New York, NY 10158
7. Smith, H. D. and M. R. Elmore, 1992, Corrosion Studies of Carbon Steel under Impinging Jets of Simulated Slurries of Neutralized Current Acid Waste (NCAW) and Neutralized Cladding Removal Waste (NCRW), PNL-7816, Pacific Northwest Laboratory, Richland, Washington.
8. Uhlig, HH, 1948, *Corrosion Handbook*, John Wiley & Sons, New York, NY 10158
9. Wilding, MW and BE Paige, 1976, *Survey on Corrosion of Metals and Alloys in Solutions Containing Nitric Acid*, ICP-1107, Idaho National Engineering Laboratory, Idaho Falls, ID
10. Zapp, PE, 1998, *Preliminary Assessment of Evaporator Materials of Construction*, BNF—003-98-0029, Rev 0, Westinghouse Savannah River Co , Inc for BNFL Inc.

Bibliography:

1. Agarwal, DC, *Nickel and Nickel alloys*, In: Revie, WW, 2000. *Uhlig's Corrosion Handbook*, 2nd Edition, Wiley-Interscience, New York, NY 10158
2. Berhardsson, S, R Mellstrom, and J Oredsson, 1981, *Properties of Two Highly corrosion Resistant Duplex Stainless Steels*, Paper 124, presented at Corrosion 81, NACE International, Houston, TX 77218
3. Davis, JR (Ed), 1994, *Stainless Steels*, In ASM Metals Handbook, ASM International, Metals Park, OH 44073
4. Divine, J. R. and W. C Carlos, 1992, *Assessment of Known Degradation and Existing Corrosion Studies on Steel*, Presented at the High-Level Waste Tank Systems Structural Integrity Workshop, February 19-20, 1992, Richland, Washington
5. Jones, RH (Ed.), 1992, *Stress-Corrosion Cracking*, ASM International, Metals Park, OH 44073
6. Phull, BS, WL Mathay, & RW Ross, 2000, *Corrosion Resistance of Duplex and 4-6% Mo-Containing Stainless Steels in FGD Scrubber Absorber Slurry Environments*, Presented at Corrosion 2000, Orlando, FL, March 26-31, 2000, NACE International, Houston TX 77218.
7. Van Delinder, LS (Ed), 1984, Corrosion Basics, NACE International, Houston, TX 77084

VESSEL/TANK MATERIAL SELECTION DATA SHEET

OPERATING CONDITIONS

Material Selection Data Sheets for
The Pretreatment Facility

Materials Selection Data

Component (Name/ID) HLP-VSL-00028
System HLP

Operations

Chemicals	Unit	Cold Startup	Normal Operation*	Standby/Idle	Cleaning	Accident
Aluminum	g/l		2.2E+01			
Chloride	g/l		2.1E+00			
Fluoride	g/l		5.5E+00			
Hydroxide	g/l		8.7E-01			
Iron	g/l		2.6E+01			
Nitrate	g/l		5.6E+01			
Nitrite	g/l		1.1E+02			
Phosphate	g/l		5.5E+00			
TOC[?]	g/l		1.8E+01			
Sulfate	g/l		1.4E+00			
Undissolved solids	g/l		2.5E+02			
Particle size/hardness	µm (##)		N/A			
Other (Hg)	g/l		2.2E+00			
Carbonate	g/l		2.7E+01			
pH	-		1.3E+01			
Dose rate, α, β/γ (inside)	Rad		N/A			
Temperature	°C		3.8E+01			
Velocity	fps		N/A			
Vibration			N/A			
Time of exposure	#		1.0E+02			

* Based on Contract Maximum Chemical A/D run at 60/6

- % of total; ## - use Mho scale

Remarks: Stream HLP09

[X] Black Cell

[X] Flushing

[?] List expected organic species: N/A
Use maximum of 2 significant figures

N/A = Information not available or not in Process Engineering Scope

PLANT ITEM MATERIAL SELECTION DATA SHEET

R10618387

PJV-VSL-00002 (PTF)
PJV Drain Collection Vessel

ISSUED BY
RPP-WTP PDC

- Design Temperature (°F)(max/min): 200/-20
- Design Pressure (psig) (internal/external): 15/FV
- Location: incell

Contents of this document are Dangerous Waste Permit affecting

Operating conditions are as stated on sheets 5 and 6

Options Considered:

- Vessel receives wash drains from PJV Demister elements
- Vessel receives condensate and flush drains from exhaust headers

Materials Considered:

Material (UNS No,.)	Relative Cost	Acceptable Material	Unacceptable Material
Carbon Steel	0.23		X
304L (S30403)	1.00	X	
316L (S31603)	1.18	X	
6% Mo (N08367/N08926)	7.64	X	
Alloy 22 (N06022)	11.4	X	
Ti-2 (R50400)	10.1		X

Recommended Material: 304 (max 0.030% C; dual certified)

Recommended Corrosion Allowance: 0.040 inch (includes 0.024 inch corrosion allowance and 0.004 inch erosion allowance)

Process & Operations Limitations:

- None

STEVEN WAKEMAN VAIL
STATE OF WASHINGTON
39250
REGISTERED
PROFESSIONAL ENGINEER

8/22/05

EXPIRES: 12/07/05

Please note that source, special nuclear and byproduct materials, as defined in the Atomic Energy Act of 1954 (AEA), are regulated at the U.S. Department of Energy (DOE) facilities exclusively by DOE acting pursuant to its AEA authority. DOE asserts, that pursuant to the AEA, it has sole and exclusive responsibility and authority to regulate source, special nuclear, and byproduct materials at DOE-owned nuclear facilities. Information contained herein on radionuclides is provided for process description purposes only.

This bound document contains a total of 6 sheets.

REV	DATE	REASON FOR REVISION	PREPARER	CHECKER	APPROVER
1	8/22/05	Issued for Permitting Use			
0	7/15/04	Issued for Permitting Use	DLA	JRD	APR

PLANT ITEM MATERIAL SELECTION DATA SHEET

Corrosion Considerations:

This vessel receives condensate collected in the headers of the PJV system.

a General Corrosion
Hamner (1981) lists corrosion rates in water for both 304L and 316L as < 2 mpy at temperatures up to 150°F. Similarly, corrosion rates in dilute caustic are less than 1 mpy.

Conclusion:
304L and 316L are expected to be sufficiently resistant with a probable general corrosion rate of less than 1 mpy at up to 200°F.

b Pitting Corrosion
Pitting should not be a concern for 304L or 316L at the stated low-chloride conditions and stated temperature.

Conclusion:
Under normal conditions, 304L is expected to be satisfactory.

c End Grain Corrosion
End grain corrosion only occurs in metal with exposed end grains and in highly oxidizing acid conditions.

Conclusion:
Not applicable to this system.

d Stress Corrosion Cracking
The exact amount of chloride required to cause stress corrosion cracking is unknown. In part this is because the amount varies with temperature, metal sensitization, and the environment. But it is also unknown because chloride tends to concentrate under heat transfer conditions, by evaporation, and electrochemically during a corrosion process. Hence, even as little as a few ppm can lead to cracking under some conditions. Generally, as seen in Sedriks (1996) and Davis (1987), chloride stress corrosion cracking does not usually occur below about 140°F. During the normal operations, either 304L or 316L are expected to be satisfactory.

Conclusion:
At the normal, stated, operating environment, 304L is satisfactory.

e Crevice Corrosion
See Pitting.

Conclusion:
See Pitting

f Corrosion at Welds
Corrosion at welds is not considered a problem in the proposed environment.

Conclusion:
Weld corrosion is not considered a problem for this system.

g Microbiologically Induced Corrosion (MIC)
The proposed operating temperatures are acceptable for microbial growth but there appears to be little chance of the introduction of microbes.

Conclusion:
MIC is not expected to be a problem.

h Fatigue/Corrosion Fatigue
Corrosion fatigue is not expected to be a problem in this vessel.

Conclusions
Not considered to be a problem.

i Vapor Phase Corrosion
Not considered to be a concern in this vessel.

Conclusion:
Not a concern.

PLANT ITEM MATERIAL SELECTION DATA SHEET

j Erosion
Velocities within the vessel are expected to be low. Erosion allowance of 0.004 inch is sufficient for components with low solids content (< 2 wt%) at low velocities.

Conclusion:
Not expected to be a concern.

k Galling of Moving Surfaces
Not applicable.

Conclusion:
Not applicable.

l Fretting/Wear
No contacting surfaces expected.

Conclusion:
Not applicable.

m Galvanic Corrosion
No dissimilar metals are present.

Conclusion:
Not applicable.

n Cavitation
None expected.

Conclusion:
Not believed to be of concern.

o Creep
The temperatures are too low to be a concern.

Conclusion:
Not applicable.

p Inadvertent Nitric Acid Addition
Higher chloride contents and higher temperatures usually require higher alloy materials. Nitrate ions inhibit the pitting and crevice corrosion of stainless alloys. Furthermore, nitric acid passivates these alloys; therefore, lower pH values brought about by increases in the nitric acid content of process fluid will not cause higher corrosion rates for these alloys. The upset condition that was most likely to occur is lowering of the pH of the vessel content by inadvertent addition of 0.5 M nitric acid. Lowering of pH may make a chloride-containing solution more likely to cause pitting of stainless alloys. Increasing the nitric acid content of the process fluid adds more of the pitting-inhibiting nitrate ion to the process fluid. In addition, adding the nitric acid solution to the stream will dilute the chloride content of the process fluid.

Conclusion:
The recommended materials will be able to withstand a plausible inadvertent addition of 0.5 M nitric acid.

PLANT ITEM MATERIAL SELECTION DATA SHEET

References:

1. Davis, JR (Ed), 1987, *Corrosion, Vol 13*, In "Metals Handbook", ASM International, Metals Park, OH 44073
2. Hamner, NE, 1981, *Corrosion Data Survey*, Metals Section, 5th Ed, NACE International, Houston, TX 77218
3. Sedriks, AJ, 1996, *Corrosion of Stainless Steels*, John Wiley & Sons, Inc., New York, NY 10158

Bibliography:

1. Agarwal, DC, *Nickel and Nickel Alloys*, In: Revie, WW, 2000. *Uhlig's Corrosion Handbook*, 2nd Edition, Wiley-Interscience, New York, NY 10158
2. Cole, HS, 1974, *Corrosion of Austenitic Stainless Steel Alloys Due to HNO_3 – HF Mixtures*, ICP-1036, Idaho Chemical Programs -- Operations Office, Idaho Falls, ID
3. Davis, JR (Ed), 1994, *Stainless Steels*, In ASM Metals Handbook, ASM International, Metals Park, OH 44073
4. Jones, RH (Ed.), 1992, *Stress-Corrosion Cracking*, ASM International, Metals Park, OH 44073
5. Koch, GH, 1995, *Localized Corrosion in Halides Other Than Chlorides*, MTI Pub No. 41, Materials Technology Institute of the Chemical Process Industries, Inc, St Louis, MO 63141
6. Uhlig, HH, 1948, *Corrosion Handbook*, John Wiley & Sons, New York, NY 10158
7. Van Delinder, LS (Ed), 1984, *Corrosion Basics*, NACE International, Houston, TX 77084

PLANT ITEM MATERIAL SELECTION DATA SHEET

OPERATING CONDITIONS

PROCESS CORROSION DATA SHEETS

Component(s) (Name/ID #) PJV drain collection vessel (PJV-VSL-00002)

Facility PTF

In Black Cell? Yes

Chemicals	Unit[1]	Contract Max		Non-Routine		Notes
		Leach	No leach	Leach	No Leach	
Aluminum	g/l	9.77E-04	9.37E-04			
Chloride	g/l	4.31E-04	4.63E-04			
Fluoride	g/l	4.88E-04	5.24E-04			
Iron	g/l					
Nitrate	g/l	7.06E-03	7.49E-03			
Nitrite	g/l	2.23E-03	2.39E-03			
Phosphate	g/l	1.60E-03	1.69E-03			
Sulfate	g/l	8.58E-04	9.20E-04			
Mercury	g/l					
Carbonate	g/l	2.70E-03	2.79E-03			
Undissolved solids	wt%					
Other (NaMnO4, Pb,...)	g/l					
Other	g/l					
pH	N/A					Note 3
Temperature	°F					Note 2

List of Organic Species:

Notes:

1. Concentrations less than 1x 10^{-4} g/l do not need to be reported; list values to two significant digits max.
2. T operation 59 °F to 113 °F, nominal 113 °F
3. pH will be nominally 9 to 10 but could get as low as 7

Assumptions:

PLANT ITEM MATERIAL SELECTION DATA SHEET

4.7.1.2 PJV Drain Collection Vessel

Routine Operations

The low points of the inlet header and sub-headers of the PJV system are provided with drain lines that drain condensate collected in the header to the PJV drain collection vessel PJV-VSL-00002. The condensate is transferred from PJV-VSL-00002 to PWD-VSL-00044.

Non-Routine Operations that Could Affect Corrosion/Erosion

None identified.

PLANT ITEM MATERIAL SELECTION DATA SHEET

R10591498

ISSUED BY
RPP-WTP PDC

PVP-SCB-00002 (PTF)
Vessel Vent Caustic Scrubber

- Design Temperature (°F)(max/min): 150/-20
- Design Pressure (psig) (max/min): 15/-5
- Location: incell

Contents of this document are Dangerous Waste Permit affecting

Operating conditions are as stated on sheets 5 and 6

Equipment will not be maintained.

Options Considered:

- Normal operating conditions
- Demineralized water or acid wash

Materials Considered:

Material (UNS No.)	Relative Cost	Acceptable Material	Unacceptable Material
Carbon Steel	0.23		X
304L (S30403)	1.00		X
316L (S31603)	1.18	X (column)	
6% Mo (N08367)	7.64	X	
Alloy 22 (N06022)	11.4	X	
Ti-2 (R50400)	10.1	X	

Recommended Material: Column: 316 (max 0.030% C; dual certified)
(0.040 inch corrosion allowance includes 0.024 inch corrosion allowance and 0.004 inch erosion allowance)
Column packing: UNS N08367 (0.0 inch corrosion allowance)
Demister packing: UNS N08367 (0.0 inch corrosion allowance)

Process & Operations Limitations:

- Develop rinsing/flushing procedure for acid and water

STEVEN WAKEMAN VAIL
STATE OF WASHINGTON
39250
REGISTERED PROFESSIONAL ENGINEER
EXPIRES: 12/07/07

11/17/05

Please note that source, special nuclear and byproduct materials, as defined in the Atomic Energy Act of 1954 (AEA), are regulated at the U.S. Department of Energy (DOE) facilities exclusively by DOE acting pursuant to its AEA authority. DOE asserts, that pursuant to the AEA, it has sole and exclusive responsibility and authority to regulate source, special nuclear, and byproduct materials at DOE-owned nuclear facilities. Information contained herein on radionuclides is provided for process description purposes only.

This bound document contains a total of 6 sheets.

REV	DATE	REASON FOR REVISION	PREPARER	CHECKER	APPROVER
1	11/12/05	Issued for Permitting Use		HMK	
0	11/2/04	Issued for Permitting Use	DLA	JRD	APR

PLANT ITEM MATERIAL SELECTION DATA SHEET

Corrosion Considerations:

The scrubber treats the vent off-gas stream collected from the process vessels in the Pretreatment facility. Part of the NO_X/acid gases present in the stream reacts with the caustic in the scrubber to form sodium nitrate. Fresh 5M caustic solution is added to control the pH of the recirculating scrubbing liquid. It is expected that dilute nitric acid will probably be used to dissolve solids build-up in the column.

a General Corrosion
Hamner (1981) lists a corrosion rate for 304 (and 304L) in NaOH of less than 20 mpy (500 μm/y) at 77°F and over 20 mpy at 122°F. He shows 316 (and 316L) has a rate of less than 2 mpy up to 122°F and 50% NaOH. Dillon (2000) and Sedriks (1996) both state that the 300 series stainless steels are acceptable in up to 50% NaOH at temperatures up to about 122°F or slightly above. Davis (1994) states the corrosion rate for 304L in pure NaOH will be less than about 0.1 mpy up to about 212°F though Sedriks states the data beyond about 122°F are incorrect. In this system, the normal hydroxide concentrations and temperatures are such that 304L stainless steel will be acceptable.

Dilute acid is not expected to be a concern even in dissolving deposits.

The corrosion rate of the 6% Mo alloys is expected to be the same or less than that of the 300 serious stainless steels.

Conclusion:
At the stated temperatures, 304L, 316L or a 6% Mo are expected to be sufficiently resistant to the waste solution with a probable general corrosion rate of less than 1 mpy and during normal operation < 0.1 mpy.

b Pitting Corrosion
Chloride is known to cause pitting in acid and neutral solutions. Under the stated conditions, 316 stainless steel or better will be required. If the system is always operating, 316L will be satisfactory. However if extended periods of stagnation are likely, a more resistant alloy will be needed. 6% Mo alloys are more resistant to pitting than 316L.

Conclusion:
316L is recommended for the main vessel. 6% Mo is also acceptable.

c End Grain Corrosion
End grain corrosion only occurs in metal with exposed end grains and in highly oxidizing acid conditions.

Conclusion:
Not applicable.

d Stress Corrosion Cracking
The exact amount of chloride required to cause stress corrosion cracking is unknown. In part this is because the amount varies with temperature, metal sensitization, and the environment. It is also unknown because chloride tends to concentrate under heat transfer conditions, by evaporation, and electrochemically during a corrosion process. Hence, even as little as 10 ppm can lead to cracking under some conditions. Generally, as seen in Sedriks (1996) and Davis (1987), chloride stress corrosion cracking does not usually occur below about 104°F and 304L is expected to be satisfactory. Because of the possibility of chloride concentration, 316L would be the minimum choice.

Conclusion:
At the normal operating environment, the minimum alloy recommended for normal operation is a 316L stainless although a 6% Mo is acceptable.

e Crevice Corrosion
Crevice corrosion occurs at lower temperatures than does pitting. The presence of packing in contact with itself and the wall of the vessel can lead to crevice attack. The demister pad is at risk where strands contact one another. AL6XN is more resistant than 316L.

Conclusion:
316L is satisfactory for vessel if crevices are minimized. Packing should be AL_2O_3 or 316L or better. Demister pads should be 6% Mo.

f Corrosion at Welds
Corrosion at welds is not considered a problem in the proposed environment.

Conclusion:
Weld corrosion is not considered a problem for this system under normal operating conditions.

g Microbiologically Induced Corrosion (MIC)
The proposed operating conditions are generally not ideal for MIC.

Conclusion:
MIC is not considered a problem.

PLANT ITEM MATERIAL SELECTION DATA SHEET

h Fatigue/Corrosion Fatigue
Corrosion fatigue does not appear to be a concern.

Conclusions
Not a expected to be a concern.

i Vapor Phase Corrosion
Vapor phase corrosion will be a function of the degree of agitation, solution chemistry, and temperature. Nonetheless, it is not deemed a problem in this vessel.

Conclusion:
Not likely to be a concern.

j Erosion
Velocities are expected to be low. Erosion allowance of 0.004 inch for components with low solids content (< 2 wt%) at low velocities is based on 24590-WTP-RPT-M-04-0008.

Conclusion:
Not expected to be a concern.

k Galling of Moving Surfaces
Not applicable.

Conclusion:
Not applicable.

l Fretting/Wear
No contacting surfaces expected.

Conclusion:
Not applicable.

m Galvanic Corrosion
No significantly dissimilar metals are present.

Conclusion:
Not expected to be a concern.

n Cavitation
None expected.

Conclusion:
Not believed to be of concern.

o Creep
The temperatures are too low to be a concern.

Conclusion:
Not applicable.

p Inadvertent Nitric Acid Addition
Higher chloride contents and higher temperatures usually require higher alloy materials. Nitrate ions inhibit the pitting and crevice corrosion of stainless alloys. Furthermore, nitric acid passivates these alloys; therefore, lower pH values brought about by increases in the nitric acid content of process fluid will not cause higher corrosion rates for these alloys. The upset condition that was most likely to occur is lowering of the pH of the vessel content by inadvertent addition of 0.5 M nitric acid. Lowering of pH may make a chloride-containing solution more likely to cause pitting of stainless alloys. Increasing the nitric acid content of the process fluid adds more of the pitting-inhibiting nitrate ion to the process fluid. In addition, adding the nitric acid solution to the stream will dilute the chloride content of the process fluid.

Conclusion:
The recommended materials will be able to withstand a plausible inadvertent addition of 0.5 M nitric acid.

PLANT ITEM MATERIAL SELECTION DATA SHEET

References:

1. 24590-WTP-RPT-M-04-0008, Rev. 2, *Evaluation Of Stainless Steel Wear Rates In WTP Waste Streams At Low Velocities*
2. 24590-WTP-RPT-PR-04-0001, Rev. B, *WTP Process Corrosion Data*
3. CCN 130173, Dillon, CP (Nickel Development Institute), Personal Communication to J R Divine (ChemMet, Ltd., PC), 3 Feb 2000.
4. Davis, JR (Ed), 1987, *Corrosion, Vol 13*, In "Metals Handbook", ASM International, Metals Park, OH 44073
5. Davis, JR (Ed), 1994, *Stainless Steels*, In ASM Metals Handbook, ASM International, Metals Park, OH 44073
6. Hamner, NE, 1981, *Corrosion Data Survey*, Metals Section, 5th Ed, NACE International, Houston, TX 77218
7. Sedriks, AJ, 1996, *Corrosion of Stainless Steels*, John Wiley & Sons, Inc., New York, NY 10158
8. Wilding, MW and BE Paige, 1976, *Survey on Corrosion of Metals and Alloys in Solutions Containing Nitric Acid*, ICP-1107, Idaho National Engineering Laboratory, Idaho Falls, ID

Bibliography:

1. CCN 130171,Ohl, PC to PG Johnson, Internal Memo, Westinghouse Hanford Co, *Technical Bases for Cl- and pH Limits for Liquid Waste Tank Cars*, MA: PCO:90/01, January 16, 1990.
2. Agarwal, DC, *Nickel and Nickel Alloys*, In: Revie, WW, 2000. *Uhlig's Corrosion Handbook*, 2nd Edition, Wiley-Interscience, New York, NY 10158
3. Jones, RH (Ed.), 1992, *Stress-Corrosion Cracking*, ASM International, Metals Park, OH 44073
4. Koch, GH, 1995, *Localized Corrosion in Halides Other Than Chlorides*, MTI Pub No. 41, Materials Technology Institute of the Chemical Process Industries, Inc, St Louis, MO 63141
5. Uhlig, HH, 1948, *Corrosion Handbook*, John Wiley & Sons, New York, NY 10158
6. Van Delinder, LS (Ed), 1984, *Corrosion Basics*, NACE International, Houston, TX 77084

PLANT ITEM MATERIAL SELECTION DATA SHEET

24590-WTP-RPT-PR-04-0001, Rev. B
WTP Process Corrosion Data

PROCESS CORROSION DATA SHEET

Component(s) (Name/ID #) Vessel vent caustic scrubber (PVP-SCB-00002)

Facility PTF

In Black Cell? Yes

Chemicals	Unit[1]	Contract Max		Non-Routine		Notes
		Leach	No leach	Leach	No Leach	
Aluminum	g/l	4.23E-02	4.19E-02			
Chloride	g/l	1.73E-02	2.00E-02			
Fluoride	g/l	2.01E-02	2.34E-02			
Iron	g/l	3.17E-03	3.46E-03			
Nitrate	g/l	1.47E-01	1.66E-01			
Nitrite	g/l	4.40E-02	5.08E-02			
Phosphate	g/l	8.63E-02	7.51E-02			
Sulfate	g/l	3.54E-02	4.08E-02			
Mercury	g/l					
Carbonate	g/l					
Undissolved solids	wt%					
Other (NaMnO4, Pb,...)	g/l					
Other	g/l					
pH	N/A					Note 3
Temperature	°F					Note 2

List of Organic Species:

References

System Description: 24590-PTF-3YD-PVP-00001, Rev A
Mass Balance Document: 24590-WTP-M4C-V11T-00005, Rev A
Normal Input Stream #: PVP04
Off Normal Input Stream # (e.g., overflow from other vessels): N/A
P&ID: N/A
PFD: 24590-PTF-M5-V17T-P0021001, Rev 0
Technical Reports: N/A

Notes:

1. Concentrations less than 1×10^{-4} g/l do not need to be reported, list values to two significant digits max.
2. T operation 24590-PTF-MVC-PVP-00012, Rev A
3. pH approximately 7

Assumptions:

PLANT ITEM MATERIAL SELECTION DATA SHEET

4.8.3 Vessel Vent Caustic Scrubber (PVP-SCB-00002)

Routine Operations

The vessel vent caustic scrubber treats the vent offgas stream collected from the process vessels in the PT facility, primarily absorbs the NO_x/acid gases and removes large particulates from the gases. The vessel vent caustic scrubber also removes radioactive aerosols and reduces radioactive particulate loading on the vessel vent HEMEs located downstream of the caustic scrubber. The vent offgases flow upwards in the scrubber through a packed bed filled with Raschig rings or similar packing, and contact with alkaline scrubbing liquid flowing downward in the packed bed. Chilled water is circulated in a cooling jacket that surrounds the lower "sump" portion of the vessel to remove heat generated from the reactions of NO_x and other gases with the caustic present in the scrubbing liquid. The outlet gases from the scrubber flow to the vessel vent HEMEs.

Part of the NO_x/acid gases in the vent gas stream reacts with the caustic in the scrubbing liquid to form sodium nitrate. The scrubbing liquid solution is collected in the sump portion of the vessel below the packed bed section of the scrubber. Recirculating pumps recirculate scrubbing liquid solution to the top of the packed bed section of the scrubber and part of the solution directly to the sump portion to provide adequate mixing. Fresh 5 M caustic solution supplied by the metering pump from the sodium hydroxide reagent system is added to the scrubber sump vessel to control the pH of the recirculating scrubbing liquid.

Non-Routine Operations that Could Affect Corrosion/Erosion

None identified.

R10684972

PLANT ITEM MATERIAL SELECTION DATA SHEET

PVP-VSL-00001 (PTF)
HEME Drain Collection Vessel

- Design Temperature (°F)(max/min): 200/40
- Design Pressure (psig) (internal/external): 15/FV
- Location: incell

ISSUED BY
RPP-WTP PDC

Contents of this document are Dangerous Waste Permit affecting

Operating conditions are as stated on attached Process Corrosion Data Sheet

Options Considered:

- Vessel receives wash drains from PVP HEMEs
- Wash is acidic

Materials Considered:

Material (UNS No.)	Relative Cost	Acceptable Material	Unacceptable Material
Carbon Steel	0.23		X
304L (S30403)	1.00	X	
316L (S31603)	1.18	X	
6% Mo (N08367/N08926)	7.64	X	
Alloy 22 (N06022)	11.4	X	
Ti-2 (R50400)	10.1		X

Recommended Material: 304 (max 0.030% C; dual certified)

Recommended Corrosion Allowance: 0.040 inch (includes 0.024 inch corrosion allowance and 0.004 inch erosion allowance)

Process & Operations Limitations:

- Develop rinsing/flushing procedure for acid and water

STEVEN WAKEMAN VAIL
STATE OF WASHINGTON
39250
REGISTERED
PROFESSIONAL ENGINEER
EXPIRES: 12/07/07

6/13/06

Please note that source, special nuclear and byproduct materials, as defined in the Atomic Energy Act of 1954 (AEA), are regulated at the U.S. Department of Energy (DOE) facilities exclusively by DOE acting pursuant to its AEA authority. DOE asserts, that pursuant to the AEA, it has sole and exclusive responsibility and authority to regulate source, special nuclear, and byproduct materials at DOE-owned nuclear facilities. Information contained herein on radionuclides is provided for process description purposes only.

This bound document contains a total of 6 sheets.

REV	DATE	REASON FOR REVISION	PREPARER	CHECKER	APPROVER
1	6/13/06	Issued for Permitting Use		HMK	SWV
0	11/4/04	Issued for Permitting Use	DLA	JRD	SWV

PLANT ITEM MATERIAL SELECTION DATA SHEET

Corrosion Considerations:

This vessel will be used to store HEME drain before transfer to the PWD system.

a General Corrosion
In this system, the normal pH conditions and temperatures are such that 304L stainless steel would be acceptable under the low chloride conditions.

It is anticipated that the contents of this vessel are generally alkaline; however, the possibility of acidic conditions due to acidic wash of the HEME elements exists. Hamner (1981) lists both 304L and 316L corrosion rates as < 2 mpy at temperatures up to 150°F. Based on estimates from Cole (1974), corrosion rates for 304L for all of the concentrations <4 M and at temperatures to boiling are expected to be less that 1 mpy. In about 6 M acid at 145°F, the corrosion rate is approximately 2 mpy.

Conclusion:
304L and 316L are expected to be sufficiently resistant with a probable general corrosion rate of less than 1 mpy under normal operating conditions.

b Pitting Corrosion
Pitting should not be a concern for 304L or 316L at the stated low-chloride conditions and stated temperature.

Conclusion:
Under normal conditions, 304L is expected to be satisfactory.

c End Grain Corrosion
End grain corrosion only occurs in metal with exposed end grains and in highly oxidizing acid conditions.

Conclusion:
Not applicable to this system.

d Stress Corrosion Cracking
The exact amount of chloride required to cause stress corrosion cracking is unknown In part this is because the amount varies with temperature, metal sensitization, and the environment. But it is also unknown because chloride tends to concentrate under heat transfer conditions, by evaporation, and electrochemically during a corrosion process. Hence, even as little as a few ppm can lead to cracking under some conditions. Generally, as seen in Sedriks (1996) and Davis (1987), chloride stress corrosion cracking does not usually occur below about 140°F. During the normal operations, either 304L or 316L are expected to be satisfactory.

Conclusion:
At the normal, stated, operating environment, 304L is recommended.

e Crevice Corrosion
See Pitting.

Conclusion:
See Pitting

f Corrosion at Welds
Corrosion at welds is not considered a problem in the proposed environment.

Conclusion:
Weld corrosion is not considered a problem for this system.

g Microbiologically Induced Corrosion (MIC)
The proposed operating temperatures are acceptable for microbial growth but there appears to be little chance of the introduction of microbes.

Conclusion:
MIC is not expected to be a problem.

h Fatigue/Corrosion Fatigue
Corrosion fatigue is not expected to be a problem in this vessel.

Conclusions
Not considered to be a problem.

PLANT ITEM MATERIAL SELECTION DATA SHEET

i Vapor Phase Corrosion
Not considered to be a concern in this vessel.

Conclusion:
Not a concern.

j Erosion
Velocities within the vessel are expected to be low. Erosion allowance of 0.004 inch for components with low solids content (< 2 wt%) at low velocities is based on 24590-WTP-RPT-M-04-0008.

Conclusion:
Not expected to be a concern.

k Galling of Moving Surfaces
Not applicable.

Conclusion:
Not applicable.

l Fretting/Wear
No contacting surfaces expected.

Conclusion:
Not applicable.

m Galvanic Corrosion
No dissimilar metals are present.

Conclusion:
Not applicable.

n Cavitation
Cavitation is usually encountered in high velocity fluids and not normally expected in vessels.

Conclusion:
Not applicable.

o Creep
The temperatures are too low to be a concern.

Conclusion:
Not applicable.

p Inadvertent Nitric Acid Addition
Higher chloride contents and higher temperatures usually require higher alloy materials. Nitrate ions inhibit the pitting and crevice corrosion of stainless alloys. Furthermore, nitric acid passivates these alloys; therefore, lower pH values brought about by increases in the nitric acid content of process fluid will not cause higher corrosion rates for these alloys. The upset condition that was most likely to occur is lowering of the pH of the vessel content by inadvertent addition of 0.5 M nitric acid. Lowering of pH may make a chloride-containing solution more likely to cause pitting of stainless alloys. Increasing the nitric acid content of the process fluid adds more of the pitting-inhibiting nitrate ion to the process fluid. In addition, adding the nitric acid solution to the stream will dilute the chloride content of the process fluid.

Conclusion:
The recommended materials will be able to withstand a plausible inadvertent addition of 0.5 M nitric acid.

PLANT ITEM MATERIAL SELECTION DATA SHEET

References:

1. 24590-WTP-RPT-M-04-0008, Rev. 2, *Evaluation Of Stainless Steel Wear Rates In WTP Waste Streams At Low Velocities*
2. 24590-WTP-RPT-PR-04-0001, Rev. B, *WTP Process Corrosion Data*
3. CCN 130176, Cole, HS, 1974, *Corrosion of Austenitic Stainless Steel Alloys Due to HNO_3 – HF Mixtures*, ICP-1036, Idaho Chemical Programs – Operations Office, Idaho Falls, ID
4. Davis, JR (Ed), 1987, *Corrosion, Vol 13*, In "Metals Handbook", ASM International, Metals Park, OH 44073
5. Hamner, NE, 1981, *Corrosion Data Survey*, Metals Section, 5th Ed, NACE International, Houston, TX 77218
6. Sedriks, AJ, 1996, *Corrosion of Stainless Steels*, John Wiley & Sons, Inc., New York, NY 10158

Bibliography:

1. CCN 130171, Ohl, PC to PG Johnson, Internal Memo, Westinghouse Hanford Co, *Technical Bases for Cl- and pH Limits for Liquid Waste Tank Cars*, MA: PCO:90/01, January 16, 1990.
2. CCN 130173, Dillon, CP (Nickel Development Institute), Personal Communication to J R Divine (ChemMet, Ltd., PC), 3 Feb 2000.
3. Agarwal, DC, *Nickel and Nickel Alloys*, In: Revie, WW, 2000. *Uhlig's Corrosion Handbook*, 2nd Edition, Wiley-Interscience, New York, NY 10158
4. Davis, JR (Ed), 1994, *Stainless Steels*, In ASM Metals Handbook, ASM International, Metals Park, OH 44073
5. Jones, RH (Ed.), 1992, *Stress-Corrosion Cracking*, ASM International, Metals Park, OH 44073
6. Koch, GH, 1995, *Localized Corrosion in Halides Other Than Chlorides*, MTI Pub No. 41, Materials Technology Institute of the Chemical Process Industries, Inc, St Louis, MO 63141
7. Uhlig, HH, 1948, *Corrosion Handbook*, John Wiley & Sons, New York, NY 10158
8. Van Delinder, LS (Ed), 1984, *Corrosion Basics*, NACE International, Houston, TX 77084

PLANT ITEM MATERIAL SELECTION DATA SHEET

24590-WTP-RPT-PR-04-0001, Rev. B
WTP Process Corrosion Data

PROCESS CORROSION DATA SHEET

Component(s) (Name/ID #) PVP HEME (PVP-HEME-00001A/B/C); PVP HEME drains (PVP-VSL-00001)

Facility PTF

In Black Cell? yes (PVP-VSL-00001 only)

Chemicals	Unit[1]	Contract Max		Non-Routine		Notes
		Leach	No leach	Leach	No Leach	
Aluminum	g/l	5 04E-03	5 00E-03			
Chloride	g/l	2 06E-03	2 38E-03			
Fluoride	g/l	2 40E-03	2 79E-03			
Iron	g/l	3 79E-04	4 13E-04			
Nitrate	g/l	8 08E-02	9 12E-02			
Nitrite	g/l	2 42E-02	2 79E-02			
Phosphate	g/l	7 91E-03	8 96E-03			
Sulfate	g/l	4 22E-03	4 87E-03			
Mercury	g/l					
Carbonate	g/l	4 7E-02	5 1E-02			
Undissolved solids	wt%					
Other (NaMnO4, Pb,...)	g/l					
Other	g/l					
pH	N/A					Note 3
Temperature	°F					Note 2

List of Organic Species:

References

System Description 24590-PTF-3YD-PVP-00001, Rev A
Mass Balance Document 24590-WTP-M4C-V11T-00005, Rev A
Normal Input Stream # PVP06
Off Normal Input Stream # (e g , overflow from other vessels) N/A
P&ID N/A
PFD 24590-PTF-M5-V17T-P0021001, Rev 0
Technical Reports N/A

Notes:

1. Concentrations less than 1x 10^{-4} g/l do not need to be reported, list values to two significant digits max
2. T normal operation 59 °F to 113 °F, nominal 77 °F (24590-PTF-MVC-PVP-00010, Rev 0)
3 pH approximately 10 to 11

Assumptions:

PLANT ITEM MATERIAL SELECTION DATA SHEET

24590-WTP-RPT-PR-04-0001, Rev. B
WTP Process Corrosion Data

4.8.2 Vessel Vent HEME (PVP-HEME-00001A/B/C); HEME Drain Collection Vessel (PVP-VSL-00001)

Routine Operations

The combined vessel vent exhaust stream will flow from the caustic scrubber outlet to the high-efficiency mist eliminators (HEMEs) for removal of mist. There will be three HEMEs. Two of these HEMEs are in service and one is available as an offline standby.

HEMEs are commonly used to remove fine aerosols and can exhibit high efficiencies even for submicron aerosols. They are passive devices with low maintenance requirements and high reliability. The HEMEs will protect the high-efficiency particulate air (HEPA) filters, located downstream of the HEMEs, in the PVV system from excessive loading and activity buildup.

Each HEME is a vertical cylindrical vessel in which the filter cartridge elements are arranged in a set of segmental vertical filter candles, which are supported at the top inside the vessel. There will be four filter cartridge elements installed for each candle. The vent stream will flow from the outside face of the filter cartridge elements to the inside. There will be a continuous atomizing spray of demineralized water at the inlet nozzle for each HEME to ensure the inlet gas stream is saturated. This will also help in draining of the solid particulates from the filter surface. An additional arrangement for intermittent washing of the filter elements will also be provided inside the HEME vessel, which will generally be used during the offline mode.

Various fibers and other construction materials for the HEME element can be selected for their resistance to gas constituents. It is likely that a fiberglass cartridge element will be used for this application. Due to some uncertainties in selection of the best available cartridge material, possible degradation over time, and the long design life for the facility, remote changeout capability for the filter cartridges from the HEMEs is provided.

The drain from each HEME will flow into the HEME drain collection vessel, PVP-VSL-00001, via the dip seal. The drain collection vessel will be used to store HEME drains before their transfer approximately twice a week, or on high level, to the PWD system. The HEME drain transfer pumps, PVP-PMP-00002A/B (one working and one standby), will be utilized for the recirculation and transfer of the HEME drain effluent to PWD vessel, PWD-VSL-00044.

Non-Routine Operations that Could Affect Corrosion/Erosion

None identified.

PLANT ITEM MATERIAL SELECTION DATA SHEET

R10661286

PWD-VSL-00044 (PTF)
Plant Wash Vessel

ISSUED BY
RPP-WTP PDC

- Design Temperature (°F)(max/min): 237/40
- Design Pressure (psig) (max/min): 15/-8
- Location: incell
- PJM Discharge Velocity (fps): 40
- Drive Cycle: 17 % (at 40 fps)

Offspring items

PWD-VSL-00121 – PWD-VSL-00125
PWD-PJM-00021 – PWD-PJM-00028,
PWD-RFD-00121 – PWD-RFD-00125

Contents of this document are Dangerous Waste Permit affecting

Operating conditions are as stated on attached Process Corrosion Data Sheet

Operating Modes Considered:

- Normal operating conditions

Materials Considered:

Material (UNS No.)	Relative Cost	Acceptable Material	Unacceptable Material
Carbon Steel	0.23		X
304L (S30403)	1.00		X
316L (S31603)	1.18	X	
6% Mo (N08367/N08926)	7.64	X	
Alloy 22 (N06022)	11.4	X	
Ti-2 (R50400)	10.1		X

Recommended Material: 316 (max 0.030% C; dual certified)

Recommended Corrosion Allowance: 0.040 inch (includes 0.024 inch corrosion allowance and 0.016 inch general erosion allowance; additional localized protection required and discussed in section j)

Process & Operations Limitations:

- Develop rinsing/flushing procedure for acid and water.

STEVEN WAKEMAN VAIL
STATE OF WASHINGTON
39250
REGISTERED PROFESSIONAL ENGINEER
EXPIRES: 12/07/07

1/5/06

Please note that source, special nuclear and byproduct materials, as defined in the Atomic Energy Act of 1954 (AEA), are regulated at the U.S. Department of Energy (DOE) facilities exclusively by DOE acting pursuant to its AEA authority. DOE asserts, that pursuant to the AEA, it has sole and exclusive responsibility and authority to regulate source, special nuclear, and byproduct materials at DOE-owned nuclear facilities. Information contained herein on radionuclides is provided for process description purposes only.

This bound document contains a total of 7 sheets.

REV	DATE	REASON FOR REVISION	PREPARER	CHECKER	APPROVER
1	1/5/06	Issued for Permitting Use		HMK	
0	2/19/04	Issued for Permitting Use	DLA	JRD	APR

PLANT ITEM MATERIAL SELECTION DATA SHEET

Corrosion Considerations:

PWD-VSL-00044 routinely receives recycle materials from the PVP, PJV, RLD and PWD systems as well as laboratory wastes. During non-routine operation, the vessel can receive plant wash solution through the PWD breakpots. Vessel is equipped with wash rings. 19 M sodium hydroxide reagent header is available to adjust excess acidic effluent to pH > 12.

a General Corrosion
The normal operating temperature is between 59 and 111 °F. Periodically, steam can heat incoming streams to 212 °F (with a design temperature of 237 °F). The high temperature is anticipated to be localized and of short duration.

In this vessel, the temperatures normally will be sufficiently low that uniform corrosion will not be a concern. Hamner (1981) lists a corrosion rate for 304 (and 304L) in NaOH of less than 20 mpy (500 μm/y) at 77°F and over 20 mpy at 122°F. He shows 316 (and 316L) has a rate of less than 2 mpy up to 122°F and 50% NaOH. Dillon (2000) and Sedriks (1996) both state that the 300 series alloys are acceptable in up to 50% NaOH at temperatures up to about 122°F or slightly above. Divine's work (1986) with simulated-radwaste evaporators, six months at 140°F, showed 304L was slightly more resistant to corrosion (<0.2 mpy) than was 316L (<0.6 mpy); Ni 200, pure nickel, was much less resistant (≈7 mpy) probably due to the complexants. Zapp (1998) notes that the Savannah River evaporator vessels, operating at about 266°F, are made of 304L and no failures are known to have occurred. Failures have occurred in the 304L heat transfer surfaces. Gray's review of the Savannah River evaporators (1994), confirms that all failures experienced since the system start-up in 1960 have been from failed tube bundles, not the evaporator vessels. Ohl & Carlos (1994), in their review of the 242-A Evaporator, found in waste similar to that expected in LAW, the corrosion of 304L after about two years of operation at 140°F was less than the accepted variability of the plate. Because of uncertainties in the starting thickness of the metal, a review of the raw data was inconclusive.

Davis (1994) states the corrosion rate for 304L in pure NaOH will be less than about 0.11 mpy up to about 212°F though Sedriks (1996) states the data beyond about 122°F are low due to oxidizing agents. Danielson & Pitman (2000), based on short term studies, suggest a corrosion rate of about 0.5 mpy for 316L in simulated waste at boiling, >212°F.

Conclusion:
At the stated operating conditions and in an alkaline environment, both 304L and 316L have very low corrosion rates and either is acceptable. However, 316L is considered somewhat better suited to the possible cleaning conditions and is recommended.

b Pitting Corrosion
Chloride is known to cause pitting in acid and neutral solutions. Dillon (2000) is of the opinion that in alkaline solutions, pH>12, chlorides are likely to promote pitting only in tight crevices. Dillon and Koch (1995) are of the opinion that fluoride will have little effect. Further, Revie (2000) and Uhlig (1948) note that nitrates inhibit chloride pitting. Wilding and Paige (1976) note that nitric acid inhibits chloride attack though their data are at higher temperatures and concentrations.

Conclusion:
Under normal conditions, 316L is expected to be satisfactory.

c End Grain Corrosion
End grain corrosion only occurs in metal with exposed end grains and in highly oxidizing acid conditions.

Conclusion:
Not applicable to this system.

d Stress Corrosion Cracking
The exact amount of chloride required to cause stress corrosion cracking is unknown. In part this is because the amount varies with temperature, metal sensitization, and the environment. But it is also unknown because chloride tends to concentrate under heat transfer conditions, by evaporation, and electrochemically during a corrosion process. Hence, even as little as 10 ppm can lead to cracking under some conditions. Generally, as seen in Sedriks (1996) and Davis (1987), stress corrosion cracking does not usually occur below about 140°F. If the concentrations are as stated, stress corrosion cracking will be minimized. Although caustic cracking is possible above 140°F, it is not expected under these conditions due to the presence of oxidizing species such as nitrate.

Conclusion:
Because of the normal operating environment, 316L stainless steel is expected to be acceptable.

PLANT ITEM MATERIAL SELECTION DATA SHEET

e Crevice Corrosion
The pitting discussion covers this area.

Conclusion:
See Pitting

f Corrosion at Welds
Corrosion at welds is not considered a problem in the proposed environment.

Conclusion:
Weld corrosion is not considered a problem for this system.

g Microbiologically Induced Corrosion (MIC)
The proposed operating temperatures are suitable for microbial growth but, additionally, the location of the system in the process suggests little chance of the introduction of microbes.

Conclusion:
MIC is not expected to be a problem.

h Fatigue/Corrosion Fatigue
At the operating pH, corrosion fatigue is not expected to be a problem in a proper designed vessel.

Conclusions
Not considered to be a problem.

i Vapor Phase Corrosion
The vapor phase portion of the vessel will be spattered with solution and pitting or crevice corrosion may be a concern. The presence of wash rings within the vessels will allow this area to be rinsed.

Conclusion:
Not a concern.

j Erosion
Based on past experiments by Smith & Elmore (1992), the solids are soft and erosion is not expected to be a concern for the vessel wall. Based on 24590-WTP-RPT-M-04-0008, a general erosion allowance of 0.016 inch is adequate for components with maximum solids content up to 27.3 wt% at velocities less than 4 m/s. Additional 316L stainless steel should be provided as localized protection for the applicable portions of the bottom head to accommodate PJM discharge velocities of up to 12 m/s with solids concentrations of 13.5 wt% for a usage of 43 % operation as documented in 24590-WTP-M0C-50-00004. PWD-VSL-00044 requires at least 0.067-inch additional protection. The 13.5 wt% is considered to be conservative and is based on the WTP Prime Contract maximum. The fraction of the time that the solids concentration is expected to be at maximum is 10 %. During normal operation, the solids content of PWD-VSL-00044 is expected to be well below the anticipated maximum.

The wear of the PJM nozzles can occur from flow for both the discharge and reflood cycles of operation. At least 0.046–inch of additional 316L stainless steel should be provided on the inner surface of the PJM nozzle to accommodate wear due to PJM discharge and suction velocities with solids concentrations of 13.5 wt% for usage of 43 % operation as documented in 24590-WTP-M0C-50-00004.

Conclusion:
The recommended corrosion allowance provides sufficient protection for erosion of the vessel wall. Additional localized protection for the bottom head will accommodate PJM discharge velocities and for the PJM nozzles will accommodate PJM discharge and reflood velocities.

k Galling of Moving Surfaces
Not applicable.

Conclusion:
Not applicable.

PLANT ITEM MATERIAL SELECTION DATA SHEET

l Fretting/Wear
Fretting/wear is not anticipated due to the lack of moving parts.

Conclusion:
Not a concern.

m Galvanic Corrosion
In the proposed environment and with the lack of dissimilar alloys, there are no potential differences. Therefore, no galvanic corrosion is expected.

Conclusion:
Not a concern.

n Cavitation
None expected.

Conclusion:
Not believed to be of concern.

o Creep
The temperatures are too low to be a concern.

Conclusion:
Not applicable.

p Inadvertent Nitric Acid Addition
Higher chloride contents and higher temperatures usually require higher alloy materials. Nitrate ions inhibit the pitting and crevice corrosion of stainless alloys. Furthermore, nitric acid passivates these alloys; therefore, lower pH values brought about by increases in the nitric acid content of process fluid will not cause higher corrosion rates for these alloys. The upset condition that was most likely to occur is lowering of the pH of the vessel content by inadvertent addition of 0.5 M nitric acid. Lowering of pH may make a chloride-containing solution more likely to cause pitting of stainless alloys. Increasing the nitric acid content of the process fluid adds more of the pitting-inhibiting nitrate ion to the process fluid. In addition, adding the nitric acid solution to the stream will dilute the chloride content of the process fluid.

Conclusion:
The recommended materials will be able to withstand a plausible inadvertent addition of 0.5 M nitric acid for a limited period.

PLANT ITEM MATERIAL SELECTION DATA SHEET

References:

1. 24590-WTP-M0C-50-00004, Rev. D*Wear Allowance for WTP Waste Slurry Systems*
2. 24590-WTP-RPT-M-04-0008, Rev. 2, *Evaluation Of Stainless Steel Wear Rates In WTP Waste Streams At Low Velocities*
3. 24590-WTP-RPT-PR-04-0001, Rev. B, *WTP Process Corrosion Data*
4. CCN 130172, Divine, JR, 1986, Letter to A.J. Diliberto, *Reports of Experimentation*, Battelle, Pacific Northwest Laboratories, Richland, WA 99352
5. CCN 130173, Dillon, CP (Nickel Development Institute), Personal Communication to J R Divine (ChemMet, Ltd., PC), 3 Feb 2000.
6. Danielson, MJ & SG Pitman, 2000, *Corrosion Tests of 316L and Hastelloy C-22 in Simulated Tank Waste Solutions*, PNWD-3015 (BNFL-RPT-019, Rev 0), Pacific Northwest Laboratory, Richland WA.
7. Davis, JR (Ed), 1987, *Corrosion, Vol 13*, In "Metals Handbook", ASM International, Metals Park, OH 44073
8. Davis, JR (Ed), 1994, *Stainless Steels*, In ASM Metals Handbook, ASM International, Metals Park, OH 44073
9. Gray, PL, (1994), *Summary of Evaporator Failures in F & H Tank Farms (U)*, WSRC-TR-94-0571, Westinghouse Savannah River Company, Aiken, SC 29802
10. Hamner, NE, 1981, *Corrosion Data Survey*, Metals Section, 5th Ed, NACE International, Houston, TX
11. Koch, GH, 1995, *Localized Corrosion in Halides Other Than Chlorides*, MTI Pub No. 41, Materials Technology Institute of the Chemical Process Industries, Inc, St Louis, MO 63141
12. Ohl, PC & WC Carlos, 1994, *Hanford High-Level Evaporator/Crystallizer Corrosion Evaluation*, Presented at Corrosion 94, NACE International, Houston TX 77218
13. Revie, WW, 2000. *Uhlig's Corrosion Handbook*, 2nd Edition, Wiley-Interscience, New York, NY 10158
14. Sedriks, AJ, 1996, *Corrosion of Stainless Steels*, John Wiley & Sons, Inc., New York, NY 10158
15. Smith, H. D. and M. R. Elmore, 1992, Corrosion Studies of Carbon Steel under Impinging Jets of Simulated Slurries of Neutralized Current Acid Waste (NCAW) and Neutralized Cladding Removal Waste (NCRW), PNL-7816, Pacific Northwest Laboratory, Richland, Washington.
16. Uhlig, HH, 1948, *Corrosion Handbook*, John Wiley & Sons, New York, NY 10158
17. Wilding, MW & BE Paige, 1976, *Survey on Corrosion of Metals and Alloys in Solutions Containing Nitric Acid*, ICP-1107, Idaho National Engineering Laboratory, Idaho Falls, ID.
18. Zapp, PE, 1998, *Preliminary Assessment of Evaporator Materials of Construction*, BNF—003-98-0029, Rev 0, Westinghouse Savannah River Co., Inc for BNFL Inc.

Bibliography:

1. CCN 130170, Blackburn, LD to PG Johnson, Internal Memo, Westinghouse Hanford Co, *Evaluation of 240-AR Chloride Limit*, August 15, 1991.
2. CCN 130171, Ohl, PC to PG Johnson, Internal Memo, Westinghouse Hanford Co, *Technical Bases for Cl^- and pH Limits for Liquid Waste Tank Cars*, MA: PCO:90/01, January 16, 1990.
3. Agarwal, DC, *Nickel and Nickel Alloys*, In: Revie, WW, 2000. *Uhlig's Corrosion Handbook*, 2nd Edition, Wiley-Interscience, New York, NY 10158
4. Jenkins, CF, 1998, *Performance of Evaporators in High Level Radioactive Chemical Waste Service*, Presented at Corrosion 98, NACE International, Houston TX 77084
5. Jones, RH (Ed.), 1992, *Stress-Corrosion Cracking*, ASM International, Metals Park, OH 44073
6. Phull, BS, WL Mathay, & RW Ross, 2000, *Corrosion Resistance of Duplex and 4-6% Mo-Containing Stainless Steels i FGD Scrubber Absorber Slurry Environments*, Presented at Corrosion 2000, Orlando, FL, March 26-31, 2000, NACE International, Houston TX 77218.
7. Van Delinder, LS (Ed), 1984, *Corrosion Basics*, NACE International, Houston, TX 77084

PLANT ITEM MATERIAL SELECTION DATA SHEET

24590-WTP-RPT-PR-04-0001, Rev. B
WTP Process Corrosion Data

PROCESS CORROSION DATA SHEET

Component(s) (Name/ID #) Plant wash vessel (PWD-VSL-00044)

Facility PTF

In Black Cell? Yes

Chemicals	Unit[1]	Contract Maximum		Non-Routine		Notes
		Leach	No leach	Leach	No Leach	
Aluminum	g/l	4.2E-02	5.3E-02	2.30E-01	2.31E-01	
Chloride	g/l	1.2E-01	1.4E-01	8.85E-02	1.06E-01	
Fluoride	g/l	7.2E-02	9.5E-02	1.05E-01	1.26E-01	
Iron	g/l	3.2E-01	2.5E-01	1.69E-02	1.89E-02	
Nitrate	g/l	1.6E+01	1.5E+01	1.54E+01	8.61E+00	
Nitrite	g/l	4.4E-02	5.1E-02	4.88E-01	5.83E-01	
Phosphate	g/l	6.6E-02	7.5E-02	3.53E-01	4.13E-01	
Sulfate	g/l	3.5E-02	4.1E-02	1.88E-01	2.24E-01	
Mercury	g/l	4.0E-01	6.0E-01	5.47E-04	1.42E-04	
Carbonate	g/l	4.7E-02	5.1E-02	6.59E-01	7.24E-01	
Undissolved solids	wt%					Note 4
Other (NaMnO4, Pb,...)	g/l					
Other	g/l					
pH	N/A					Note 3
Temperature	°F					Note 2

List of Organic Species:

References
System Description: 24590-PTF-3YD-PWD-00001, Rev 1
Mass Balance Document: 24590-WTP-M4C-V11T-00005, Rev A
Normal Input Stream #: The incoming streams will be diluted to a minum dilution ratio of 8 to 1 (water to fluid). Data in table represent pre-dilution.
Off Normal Input Stream # (e.g., overflow from other vessels): See section 4.9.13
P&ID: 24590-PTF-M6-PWD-P0002, Rev 2
PFD: 24590-PTF-M5-V17T-P0022002, Rev 2
Technical Reports:

Notes:
1. Concentrations less than 1x 10^{-4} g/l do not need to be reported; list values to two significant digits max.
2. T normal operation 59 °F to 111 °F (24590-PTF-MVC-PWD-00028, Rev 0)
3. pH approximately 10 to 11
4. Overflow is diluted to Newtonian fluid with water as soon as normal operation is achieved. Expected minimum dilution ratio 8.

Assumptions:

4.9.13 Plant Wash Vessel (PWD-VSL-00044)

Routine Operations

PWD-VSL-00044 is located on the ground level in a black cell. It has a batch volume of 60,000 gallons. The vessel is sized to receive washes from the largest potential wash and still be able to handle routine transfers from other sources.

An air in-bleed and forced purge air are provided to dilute hydrogen generated in vessel PWD-VSL-00044. Pulse jet mixers are used to provide a uniform mixture during neutralization within vessel PWD-VSL-00044. An RFD supplies a representative sample of the vessel contents, which will be analyzed for pH in the laboratory. Excess acidic effluent is adjusted (to pH>12) with 19 M sodium hydroxide supplied from a reagent header.

An RFD supplies a representative sample of the contents of vessel PWD-VSL-00044 to the lab for analysis. Normally, the contents of vessel PWD-VSL-00044 are blended with those of vessels PWD-VSL-00015 and PWD-VSL-00016 within vessel FEP-VSL-00017A or B to maintain a consistent evaporator feed.

Vessel PWD-VSL-00044 vents to the vessel vent caustic scrubber (PVP-SCB-00002) via the vessel vent header.

During normal operations, vessel PWD-VSL-00044 receives recycle material from the following sources:

- HEME drains via vessel PVP-VSL-00001 and demister drains via PJV-VSL-00002
- Spent scrub solution from PVP-SCB-00002
- Contaminated effluent from RLD-VSL-00003 (LAW vitrification facility)
- Waste from PWD-VSL-00043
- Active material from PWD-VSL-00033
- Laboratory wastes

Overflows from non-Newtonian vessels (marked with *) will be diluted with water as soon as normal operation is achieved/recovered. A minimum dilution ratio (water/fluid) of 8 to 1 is expected.

Non-Routine Operations that Could Affect Corrosion/Erosion

- Vessel PWD-VSL-00044 overflows to PWD-VSL-00033.
- Wash rings are used for vessel and breakpot washing. A vessel-emptying ejector, installed from the UFP system end, is used for non-routine transfers to the acidic/alkaline effluent vessel (PWD-VSL-00016).
- During non-routine operations, vessel PWD-VSL-00044 receives plant wash from the following sources:
  - Plant wash solution from interior surfaces of pretreatment vessels via vessel-emptying ejectors discharging to plant wash/sump breakpots PWD-BRKPT-00007 through 10 and PWD-BRKPT-00017 and 19
  - Plant wash solution from pretreatment cell walls, equipment exterior surfaces, and cell cladding via sump-emptying ejectors discharging to breakpots PWD-BRKPT-00007 through 10 and PWD-BRKPT-00017 and 19
- Condensate drain from pretreatment vessel vent header
- Active condensate from the high- and low-pressure steam condensate headers
- Active material from the closed loop chilled water

VESSEL/TANK MATERIAL SELECTION DATA SHEET

R10045225

PWD-VSL-00043 (PTF)
HLW Effluent Transfer Vessel

- Design Temperature (°F)(Max/min): 185/0
- Design Pressure (psig) (Max/min): 15/FV
- Location: incell
- PJM Discharge Velocity (fps) (max): 32
- Drive Cycle: 25 %

Offspring items

PWD-RFD-000141, PWD-RFD-000142
PWD-PJM-00041 – PWD-PJM-00048
PWD-VSL-00141, PWD-VSL-00142

Operating conditions are as stated on Sheet 5

Operating Modes Considered:

- The vessel is always at pH 8 at the normal operating temperature.

Materials Considered:

Material (UNS No,.)	Relative Cost	Acceptable Material	Unacceptable Material
Carbon Steel	0.23		X
304L (S30403)	1.00		X
316L (S31603)	1.18	X	
6% Mo (N08367/N08926)	7.64	X	
Alloy 22 (N06022)	11.4	X	
Ti-2 (R50400)	10.1		X

Recommended Material: 316 (max 0.030% C; dual certified)

Recommended Corrosion Allowance: 0.08 inch

Process & Operations Limitations:

- Develop rinsing/flushing procedure for acid and water
- Develop lay-up strategy

MARK W. HOFFMANN
STATE OF WASHINGTON
0030952
REGISTERED
PROFESSIONAL ENGINEER
3/28/03
EXPIRES 12/10/04

This bound document contains a total of 5 sheets

REV	DATE	REASON FOR REVISION	PREPARER	CHECKER	APPROVER
1	3/28/03	Issued for Permitting Use			
0	9/24/02	Issued for Permitting Use	DLA	JRD	MWH

Processed Data Entry | Copied QA | Scanned | Filed

VESSEL/TANK MATERIAL SELECTION DATA SHEET

Corrosion Considerations:

a General Corrosion
General corrosion is not expected to be a concern with an anticipated corrosion rate less than 1 mpy.

Conclusion: For the stated alkaline waste conditions, 304L or 316L is recommended. The corrosion rate is expected to be < 1 mpy.

b Pitting Corrosion
Chloride is known to cause pitting in acid and neutral solutions. Normally the vessel is to operate at approximately 115°F at a pH of 8. Berhardsson et al (1981) concluded based solely on concentrations that 316L will provide added protection against the concentration of chlorides during operation.

If the vessel were filled with process water and left stagnant, there would be a tendency to pit. The time to initiate would depend on the source of the water, being shorter for filtered river water and longer for DIW. Pitting has been observed in both cases, and likely occurs because residual chlorides remain.

Conclusion:
Localized corrosion, such as pitting, is common but can be mitigated by alloys with higher molybdenum contents than the standard austenitic stainless steels. Based on the expected operating conditions, 316L will be acceptable.

c End Grain Corrosion
End grain corrosion only occurs in metal with exposed end grains and in highly oxidizing acid conditions.

Conclusion:
Not applicable in this system.

d Stress Corrosion Cracking
The exact amount of chloride required to cause stress corrosion cracking is unknown. In part this is because the amount varies with temperature, metal sensitization, and the environment. But it is also unknown because chloride tends to concentrate under heat transfer conditions, by evaporation, and electrochemically during a corrosion process. Hence, even as little as 10 ppm can lead to cracking under some conditions. Generally, as seen in Sedriks (1996) and Davis (1987), stress corrosion cracking does not usually occur below about 104°F. The continual use of the vessel is expected to allow use of 316L

Conclusion:
For the normal operating environment, 316L or better is required.

e Crevice Corrosion
With the stated operating conditions, 316L would be the minimum acceptable. Also see Pitting.

Conclusion:
A minimum of 316L is needed.

f Corrosion at Welds
Other than pitting or crevice corrosion, corrosion at welds is not considered a problem in the proposed environment.

Conclusion:
Weld corrosion is not considered a problem for this system.

VESSEL/TANK MATERIAL SELECTION DATA SHEET

g Microbiologically Induced Corrosion (MIC)
The proposed operating conditions are not conducive to microbial growth – the conditions are correct but the fluids have been through several processes that make MIC contamination unlikely.

Conclusion:
MIC is not considered a problem.

h Fatigue/Corrosion Fatigue
Corrosion fatigue is a not expected to be a problem.

Conclusions
Not expected to be a concern.

i Vapor Phase Corrosion
The vapor phase portion of the vessel is expected to be contacted with particles of waste from splashing that should keep that area sufficiently rinsed.

Conclusion:
Vapor phase corrosion is unlikely.

j Erosion
Velocities within the vessel are expected to be low.

Conclusion:
Not expected to be a concern.

k Galling of Moving Surfaces
Not applicable.

Conclusion:
Not applicable.

l Fretting/Wear
No contacting surfaces expected.

Conclusion:
Not applicable.

m Galvanic Corrosion
No dissimilar metals are present.

Conclusion:
Not applicable.

n Cavitation
None expected.

Conclusion:
Not believed to be of concern.

o Creep
The temperatures are too low to be a concern.

Conclusion:
Not applicable.

VESSEL/TANK MATERIAL SELECTION DATA SHEET

References:

1. deleted
2. Berhardsson, S, R Mellstrom, and J Oredsson, 1981, *Properties of Two Highly corrosion Resistant Duplex Stainless Steels*, Paper 124, presented at Corrosion 81, NACE International, Houston, TX 77218
3. Davis, JR (Ed), 1987, *Corrosion, Vol 13*, In "Metals Handbook", ASM International, Metals Park, OH 44073
4. Sedriks, AJ, 1996, *Corrosion of Stainless Steels*, John Wiley & Sons, Inc., New York, NY 10158

Bibliography:

1. Agarwal, DC, *Nickel and Nickel alloys*, In: Revie, WW, 2000. *Uhlig's Corrosion Handbook*, 2nd Edition, Wiley-Interscience, New York, NY 10158
2. deleted
3. Danielson, MJ & SG Pitman, 2000, *Corrosion Tests of 316L and Hastelloy C-22 in Simulated Tank Waste Solutions*, PNWD-3015 (BNFL-RPT-019, Rev 0), Pacific Northwest Laboratory, Richland WA.
4. Davis, JR (Ed), 1994, *Stainless Steels*, In ASM Metals Handbook, ASM International, Metals Park, OH 44073
5. deleted
6. deleted
7. Hamner, NE, 1981, *Corrosion Data Survey*, Metals Section, 5th Ed, NACE International, Houston, TX 77218
8. Jones, RH (Ed.), 1992, *Stress-Corrosion Cracking*, ASM International, Metals Park, OH 44073
9. Koch, GH, 1995, *Localized Corrosion in Halides Other Than Chlorides*, MTI Pub No. 41, Materials Technology Institute of the Chemical Process Industries, Inc, St Louis, MO 63141
10. deleted
11. Phull, BS, WL Mathay, & RW Ross, 2000, *Corrosion Resistance of Duplex and 4-6% Mo-Containing Stainless Steels in FGD Scrubber Absorber Slurry Environments*, Presented at Corrosion 2000, Orlando, FL, March 26-31, 2000, NACE International, Houston TX 77218.
12. Uhlig, HH, 1948, *Corrosion Handbook*, John Wiley & Sons, New York, NY 10158
13. Van Delinder, LS (Ed), 1984, *Corrosion Basics*, NACE International, Houston, TX 77084
14. Wilding, MW and BE Paige, 1976, *Survey on Corrosion of Metals and Alloys in Solutions Containing Nitric Acid*, ICP-1107, Idaho National Engineering Laboratory, Idaho Falls, ID
15. Zapp, PE, 1998, *Preliminary assessment of Evaporator Materials of Construction*, BNF—003-98-0029, Rev 0, Westinghouse Savannah River Co., Inc for BNFL Inc.

VESSEL/TANK MATERIAL SELECTION DATA SHEET

OPERATING CONDITIONS

deleted
Material Selection Data Sheets for
The Pretreatment Facility

Materials Selection Data

Component (Name/ID) PWD-VSL-00043
System PTF

Operations

Chemicals	Unit	Cold Startup	Normal Operation	Standby/Idle	Cleaning	Accident
Aluminum	g/l		2.20E-01			
Chloride	g/l		2.80E-01			
Fluoride	g/l		1.30E+00			
Hydroxide	g/l		5.90E-04			
Iron	g/l		1.20E-01			
Nitrate	g/l		2.00E+01			
Nitrite	g/l		1.20E-04			
Phosphate	g/l		0.00E+00			
TOC*	g/l		6.40E-06			
Sulfate	g/l		6.10E-01			
Undissolved solids	g/l		2.00E-01			
Particle size/hardness	µm (##)		N/A			
Other (Hg)	g/l		9.20E-01			
Carbonate	g/l		0.00E+00			
pH	-		8.0E+00			
Dose rate, α, β/γ (inside)	Rad		N/A			
Temperature	°C		4.60E+01			
Velocity	fps		N/A			
Vibration			N/A			
Time of exposure	#		1.0+02			

* Based on Contract Maximum A/D run at 60/6

- % of total; ## - use Mho scale

Assumptions:

Remarks: Stream PWD 13

Notes:

| | Black Cell

|X| Flushing

* List expected organic species:
Use maximum of 2 significant figures

PLANT ITEM MATERIAL SELECTION DATA SHEET

ISSUED BY
RPP-WTP PDC
R10672004

PWD-VSL-00015 & PWD-VSL-00016 (PTF)
Acidic/Alkaline Effluent Vessel

- Design Temperature (°F)(max/min): 237/0
- Design Pressure (psig) (max/min): 15/-10
- Location: incell
- PJM Discharge Velocity (fps): 40
- Drive Cycle: 17 % (at 40 fps)

Offspring items

PWD-VSL-00015–
PWD-VSL-00101 – PWD-VSL-00105
PWD-PJM-00001 – PWD-PJM-00008
PWD-RFD-00101 – PWD-RFD-00105
PWD-VSL-00016–
PWD-VSL-00111 – PWD-VSL-00115
PWD-PJM-00011 – PWD-PJM-00018,
PWD-RFD-00111 – PWD-RFD-00115

Contents of this document are Dangerous Waste Permit affecting

Operating conditions are as stated on attached Process Corrosion Data Sheets

Options Considered:

- Normal operating conditions.

Materials Considered:

Material (UNS No.)	Relative Cost	Acceptable Material	Unacceptable Material
Carbon Steel	0.23		X
304L (S30403)	1.00		X
316L (S31603)	1.18	X	
6% Mo (N08367/N08926)	7.64	X	
Alloy 22 (N06022)	11.4	X	
Ti-2 (R50400)	10.1		X

Recommended Material: 316 (max 0.030% C; dual certified)

Recommended Corrosion Allowance: 0.040 inch (includes 0.024 inch corrosion allowance and 0.016 inch general erosion allowance; localized protection will be provided as necessary as discussed in section j)

Process & Operations Limitations:

- Develop rinsing/flushing procedure for acid operation or ensure a sufficient alkaline heel exists during acid addition.

STEVEN WAKEMAN VAIL
STATE OF WASHINGTON
39250
REGISTERED
PROFESSIONAL ENGINEER
EXPIRES: 12/07/07
4/18/06

Please note that source, special nuclear and byproduct materials, as defined in the Atomic Energy Act of 1954 (AEA), are regulated at the U.S. Department of Energy (DOE) facilities exclusively by DOE acting pursuant to its AEA authority. DOE asserts, that pursuant to the AEA, it has sole and exclusive responsibility and authority to regulate source, special nuclear, and byproduct materials at DOE-owned nuclear facilities. Information contained herein on radionuclides is provided for process description purposes only.

This bound document contains a total of 8 sheets.

REV	DATE	REASON FOR REVISION	PREPARER	CHECKER	APPROVER
3	4/18/06	Issued for Permitting Use		HMK	SWV
2	12/23/04	Issued for Permitting Use	DLA	APR	SWV
1	11/10/04	Issued for Permitting Use	DLA	JRD	APR
0	2/26/04	Issued for Permitting Use	DLA	JRD	APR

PLANT ITEM MATERIAL SELECTION DATA SHEET

Corrosion Considerations:

These vessels receive acidic/alkaline cleaning effluent and solutions from equipment in the CNP, CXP and UFP systems, as well as non-routine transfers from other PWD system vessels.

a General Corrosion
The normal operating temperature is 80 to 100 °F. Periodically, steam can heat incoming streams to 212 °F (with a design temperature of 237 °F). The high temperature is anticipated to be localized and of short duration.

In Hamner's data (1981), 304 (and 304L) lists a corrosion rate in NaOH of less than 20 mpy (500 μm/y) at 77 °F and over 20 mpy at 122 °F. He shows 316 (and 316L) has a rate of less than 2 mpy up to 122 °F and 50 % NaOH. Dillon (2000) and Sedriks (1996) both state that the 300 series alloys are acceptable in up to 50 % NaOH at temperatures up to about 122 °F or slightly above. Davis (1994) states the corrosion rate for 304L in pure NaOH will be less than about 0.1 mpy up to about 212 °F though Sedriks (1996) states the data beyond about 122 °F are low because of the presence of oxidizing agents – similar to nitrates and nitrites. Danielson & Pitman (2000), based on short term studies, suggest a corrosion rate of about 0.5 mpy for 316L in simulated waste at boiling, >212 °F. Divine's work (1986) with simulated-radwaste evaporators showed that 304L was slightly more resistant to corrosion (<0.2 mpy) than was 316L (<0.6 mpy). Zapp (1998) notes that the Savannah River evaporator vessels, operating at about 300 °F, are made of 304L and have suffered no failures in about 30 years; 304L heat transfer surfaces have failed however after about 10 years.

The amount of fluoride is expected to be small although ultrafilter washing with nitric acid might result in a high acidic fluoride concentration. Wilding and Paige (1976) have shown that in 5 % nitric acid with 1000 ppm fluoride at 290 °F, the corrosion rate of 304L can be as high as 5 mpy. If it is assumed that the corrosion rate is roughly proportional to the fluoride concentration, even at high temperatures, normal conditions will result in low rates – the unknown is the acid wash conditions. If acid is added from another source, the vessel should either be flushed prior to addition of acid or retain a sufficient alkaline heel.

If the solutions vary between strongly oxidizing (permanganate), alkaline, and acidic, then the conditions are similar to those in nuclear reactor systems during decontamination and enhanced corrosion should be expected.

Conclusion:
304L or 316L will be sufficiently resistant to the waste solution at the expected temperatures with a probable general corrosion rate of less than 1 mpy. Based on the Savannah River experience with Hanford-like waste at higher temperatures, 304L is expected to be satisfactory in hot waste. Rinsing procedure should remove as much waste as possible followed by a water rinse prior to acid cleaning to prevent acid cleaning in the presence of excessive fluoride.

b Pitting Corrosion
Chloride is known to cause pitting in acid and neutral solutions with 316L more resistant than 304L. Dillon (2000) is of the opinion that in alkaline solutions, pH>12, chlorides are likely to promote pitting only in tight crevices even with 304L. Dillon and Koch (1995) are of the opinion that fluoride will have little effect. Jenkins (2000) has stated that localized corrosion can occur under the deposits on tubes, probably due to the chlorides. Further, Revie (2000) and Uhlig (1948) note that nitrates inhibit chloride pitting. Wilding and Paige (1976) note that nitric acid inhibits chloride attack though their data are at higher temperatures and concentrations.

The vessels are shown to have substantial concentrations of chlorides and fluorides under normal operation. No indication of how much can be present from ultrafilter washing. At the stated levels of halides and under alkaline conditions, 304L is expected to be satisfactory even at 237 °F. If the pH drops below 12, the halides must be removed. Pulse jet mixers provide sufficient agitation to prevent deposits.

Conclusion:
Under normal conditions with agitation, 304L may be acceptable. However, because of non-routine low pH conditions, the more pitting resistant 316L is recommended for conservatism.

c End Grain Corrosion
End grain corrosion only occurs in metal with exposed end grains and in highly oxidizing acid conditions.

Conclusion:
Not applicable to this system.

PLANT ITEM MATERIAL SELECTION DATA SHEET

d Stress Corrosion Cracking
The exact amount of chloride required to cause stress corrosion cracking is unknown. In part this is because the amount varies with temperature, metal sensitization, and the environment but also because chloride tends to concentrate under heat transfer conditions, by evaporation, and electrochemically during a corrosion process. Hence, even as little as 10 ppm can lead to cracking under some conditions. Generally, as seen in Sedriks (1996) and Davis (1987), stress corrosion cracking does not usually occur below about 140 °F. The "L" grades of both 304 and 316 are also more resistant to cracking than the higher carbon versions. Further, the presence of nitrate is expected to inhibit cracking. If the concentrations are as stated, stress corrosion cracking will be minimized. Because of the high chloride concentrations, the likelihood of residual halides is high. Therefore a minimum of 316L is recommended

Conclusion:
With the normal operating environment, 316L stainless steel is expected to be acceptable.

e Crevice Corrosion
The pitting discussion covers this area.

Conclusion:
See Pitting

f Corrosion at Welds
Corrosion at welds is not considered a problem in the proposed environment.

Conclusion:
Weld corrosion is not considered a problem for this system.

g Microbiologically Induced Corrosion (MIC)
The proposed operating temperatures are slightly high for microbial growth but, additionally, the location of the system in the process suggests little chance of the introduction of microbes. Further, the alternation between acidic and alkaline conditions is not conducive to their growth.

Conclusion:
MIC is not expected to be a problem.

h Fatigue/Corrosion Fatigue
At the operating pH, corrosion fatigue is not expected to be a problem in a proper designed vessel.

Conclusions
Not considered to be a problem.

i Vapor Phase Corrosion
The vapor phase portion of the vessel will be spattered with solution. The presence of wash rings within the vessels will allow this area to be rinsed.

Conclusion:
Not considered to be a problem.

j Erosion
Based on past experiments by Smith & Elmore (1992), the solids are soft and erosion is not expected to be a concern for the vessel wall. Based on 24590-WTP-RPT-M-04-0008, a general erosion allowance of 0.016 inch is adequate for components with maximum solids content up to 27.3 wt%. Additional 316L stainless steel should be provided as localized protection for the applicable portions of the bottom head to accommodate PJM discharge velocities of up to 12 m/s with solids concentrations of 2.0 wt% for a usage of 65 % (PWD-VSL-00015) or 54 % (PWD-VSL-00016) operation as documented in 24590-WTP-M0E-50-00003. PWD-VSL-00015 requires at least 0.093-inch additional protection and PWD-VSL-00016 requires at least 0.077 inch additional protection. The 2.0 wt% is considered to be conservative and is based on the WTP Prime Contract maximum. During normal operation, the solids content of the PWD-VSL-00015/16 vessels is expected to be well below the anticipated maximum.

PLANT ITEM MATERIAL SELECTION DATA SHEET

The wear of the PJM nozzles can occur from flow for both the discharge and reflood cycles of operation. At least 0.065 inch, for PWD-VSL-00015, and 0.054 inch, for PWD-VSL-00016, of additional 316L stainless steel should be provided on the inner surface of the PJM nozzle to accommodate wear due to PJM discharge and suction velocities with solids concentrations of 2.0 wt% for 65 % (PWD-VSL-00015) or 54 % (PWD-VSL-00016) operation as documented in 24590-WTP-M0E-50-00003.

Conclusion:
The recommended corrosion allowance provides sufficient protection for erosion of the vessel wall. Additional localized protection for the bottom head will accommodate PJM discharge velocities and for the PJM nozzles will accommodate PJM discharge and reflood velocities.

k Galling of Moving Surfaces
Not applicable.

Conclusion:
Not applicable.

l Fretting/Wear
Fretting/wear is not anticipated due to the lack of moving parts.

Conclusion:
Not a concern.

m Galvanic Corrosion
In the proposed environment and with the lack of dissimilar alloys, there are no potential differences. Therefore, no galvanic corrosion is expected.

Conclusion:
Not a concern.

n Cavitation
None expected.

Conclusion:
Not believed to be of concern.

o Creep
The temperatures are too low to be a concern.

Conclusion:
Not applicable.

p Inadvertent Nitric Acid Addition
Higher chloride contents and higher temperatures usually require higher alloy materials. Nitrate ions inhibit the pitting and crevice corrosion of stainless alloys. Furthermore, nitric acid passivates these alloys; therefore, lower pH values brought about by increases in the nitric acid content of process fluid will not cause higher corrosion rates for these alloys. The upset condition that was most likely to occur is lowering of the pH of the vessel content by inadvertent addition of 2 M nitric acid. Lowering of pH may make a chloride-containing solution more likely to cause pitting of stainless alloys. Increasing the nitric acid content of the process fluid adds more of the pitting-inhibiting nitrate ion to the process fluid. In addition, adding the nitric acid solution to the stream will dilute the chloride content of the process fluid.

Conclusion:
The recommended materials will be able to withstand a plausible inadvertent addition of 2 M nitric acid for a limited period.

PLANT ITEM MATERIAL SELECTION DATA SHEET

References:

1. 24590-WTP-M0E-50-00003, *Wear Allowance for WTP Waste Slurry Systems*
2. 24590-WTP-RPT-M-04-0008, Rev. 2, *Evaluation Of Stainless Steel Wear Rates In WTP Waste Streams At Low Velocities*
3. 24590-WTP-RPT-PR-04-0001, Rev. B, *WTP Process Corrosion Data*
4. Danielson, MJ & SG Pitman, 2000, *Corrosion Tests of 316L and Hastelloy C-22 in Simulated Tank Waste Solutions*, PNWD-3015 (BNFL-RPT-019, Rev 0), Pacific Northwest Laboratory, Richland WA.
5. Davis, JR (Ed), 1987, *Corrosion, Vol 13*, In "Metals Handbook", ASM International, Metals Park, OH 44073
6. Davis, JR (Ed), 1994, *Stainless Steels*, In ASM Metals Handbook, ASM International, Metals Park, OH 44073
7. Dillon, CP (Nickel Development Institute), Personal Communication to J R Divine (ChemMet, Ltd., PC), 3 Feb 2000.
8. Divine, JR, 1986, Letter to A.J. Diliberto, *Reports of Experimentation*, Battelle, Pacific Northwest Laboratories, Richland, WA 99352
9. Hamner, NE, 1981, *Corrosion Data Survey*, Metals Section, 5th Ed, NACE International, Houston, TX
10. Jenkins, CF. SRTC, teleconference with JR Divine, RPP-WTP, 16 February, 2000.
11. Koch, GH, 1995, *Localized Corrosion in Halides Other Than Chlorides*, MTI Pub No. 41, Materials Technology Institute of the Chemical Process Industries, Inc, St Louis, MO 63141
12. Revie, WW, 2000. *Uhlig's Corrosion Handbook*, 2nd Edition, Wiley-Interscience, New York, NY 10158
13. Sedriks, AJ, 1996, *Corrosion of Stainless Steels*, John Wiley & Sons, Inc., New York, NY 10158
14. Smith, H. D. and M. R. Elmore, 1992, *Corrosion Studies of Carbon Steel under Impinging Jets of Simulated Slurries of Neutralized Current Acid Waste (NCAW) and Neutralized Cladding Removal Waste (NCRW)*, PNL-7816, Pacific Northwest Laboratory, Richland, Washington.
15. Uhlig, HH, 1948, *Corrosion Handbook*, John Wiley & Sons, New York, NY 10158
16. Wilding, MW & BE Paige, 1976, *Survey on Corrosion of Metals and Alloys in Solutions Containing Nitric Acid*, ICP-1107, Idaho National Engineering Laboratory, Idaho Falls, ID.
17. Zapp, PE, 1998, *Preliminary Assessment of Evaporator Materials of Construction*, BNF—003-98-0029, Rev 0, Westinghouse Savannah River Co., Inc for BNFL Inc.

Bibliography:

1. Agarwal, DC, *Nickel and Nickel Alloys*, In: Revie, WW, 2000. *Uhlig's Corrosion Handbook*, 2nd Edition, Wiley-Interscience, New York, NY 10158
2. Blackburn, LD to PG Johnson, Internal Memo, Westinghouse Hanford Co, *Evaluation of 240-AR Chloride Limit*, August 15, 1991.
3. Jones, RH (Ed.), 1992, *Stress-Corrosion Cracking*, ASM International, Metals Park, OH 44073
4. Phull, BS, WL Mathay, & RW Ross, 2000, *Corrosion Resistance of Duplex and 4-6% Mo-Containing Stainless Steels in FGD Scrubber Absorber Slurry Environments*, Presented at Corrosion 2000, Orlando, FL, March 26-31, 2000, NACE International, Houston TX 77218.
5. Van Delinder, LS (Ed), 1984, *Corrosion Basics*, NACE International, Houston, TX 77084

PLANT ITEM MATERIAL SELECTION DATA SHEET

24590-WTP-RPT-PR-04-0001, Rev. B
WTP Process Corrosion Data

PROCESS CORROSION DATA SHEET

Component(s) (Name/ID #) Acidic/alkaline effluent vessels (PWD-VSL-00015,16)

Facility PTF

In Black Cell? Yes

Chemicals	Unit[1]	Contract Maximum		Non-Routine		Notes
		Leach	No leach	Leach	No Leach	
Aluminum	g/l	2.02E+01	1.15E+01			
Chloride	g/l	4.28E+00	4.74E+00			
Fluoride	g/l	4.75E+00	5.32E+00			
Iron	g/l	7.14E+00	5.41E+00			
Nitrate	g/l	1.23E+02	1.23E+02			
Nitrite	g/l	2.20E+01	2.45E+01			
Phosphate	g/l	1.82E+01	1.78E+01			
Sulfate	g/l	8.54E+00	9.50E+00			
Mercury	g/l	7.79E-02	7.84E-02			
Carbonate	g/l	5.66E+01	5.46E+01			
Undissolved solids	wt%	1.3%	1.4%			
Other (NaMnO4, Pb,...)	g/l					
Other	g/l					
pH	N/A					Note 3
Temperature	°F					Note 2
						Note 4

List of Organic Species:

References

System Description: 24590-PTF-3YD-PWD-00001, Rev 1
Mass Balance Document: 24590-WTP-M4C-V11T-00005, Rev A
Normal Input Stream #: PWD01, UFP27, UFP28, UFP32
Off Normal Input Stream # (e.g., overflow from other vessels): See section 4.9.9, Non-routine Operations
P&ID: 24590-PTF-M6-PWD-P0003, Rev 0
PFD: 24590-PTF-M5-V17T-P0022001 Rev. 0
Technical Reports:

Notes:

1. Concentrations less than 1x 10^{-4} g/l do not need to be reported; list values to two significant digits max.
2. T normal operation 80 °F to 100 °F (24590-PTF-MVC-PWD-00031, Rev 0)
3. pH 14 but could receive 2M nitric acid (pH -0.3) from UF cleaning, on non-routine basis.
4. 19M NaOH can be added to these vessels.

Assumptions:

4.9.9 Acidic/Alkaline Effluent Vessel (PWD-VSL-00015)

Routine Operations

The vessel is sized to accommodate one wash/cleaning cycle from ultrafiltration with allowances for the other small streams that are received along with enough space to neutralize material.

During normal operations, vessel PWD-VSL-00015 receives acidic/alkaline effluent from the following sources:

- Alkaline cleaning effluent via breakpot PWD-BRKPT-00015 from ultrafiltration feed vessels (UFP-VSL-00002A/B)
- Caustic rinse from cesium ion exchange columns (CXP-IXC-00001, CXP-IXC-00002, CXP-IXC-00003, and CXP-IXC-00004)
- Process condensate from cesium nitric acid recovery (CNP-HX-00002, 3, and 4)
- Nitric acid, demineralized water, and sodium hydroxide drains from reagent bulge UFP-BULGE-00001

Non-Routine Operations that Could Affect Corrosion/Erosion

During non-routine operations, vessel PWD-VSL-00015 receives acidic/alkaline effluent from the following sources:

- Caustic rinse from cesium ion exchange via caustic rinse collection tank (CXP-VSL-00004)
- Acidic cleaning effluent via breakpot PWD-BRKPT-00015 from ultrafiltration feed vessels (UFP-VSL-00002A/B)
- Caustic rinses from solids washing/leaching (UFP-VSL-00062A/B/C)
- During abnormal operations, vessel PWD-VSL-00015 receives effluent from the following source:
- Overflow from PWD-VSL-00016
- An air in-bleed is provided to dilute hydrogen generated in vessel PWD-VSL-00015. The level and temperature in vessel PWD-VSL-00015, as well as the temperature in the acidic/alkaline effluent breakpot, are monitored in the main control room. Pulse jet mixers are used to provide a uniform mixture during neutralization within vessel PWD-VSL-00015. An RFD supplies a representative sample of the vessel contents, which will be analyzed for pH in the laboratory. Excess acidic effluent is neutralized with 19 M sodium hydroxide supplied from a reagent header. Wash rings are used for vessel and breakpot washing. A vessel-emptying ejector is used for non-routine transfers to the plant wash vessel (PWD-VSL-00044).
- An RFD supplies a representative sample of the contents of vessel PWD-VSL-00015 for analysis. If the pH is confirmed to be 12 or above, RFDs transfer the high- active effluent from vessel PWD-VSL-00015 to the waste feed evaporator feed vessels (FEP-VSL-00017A or B) for recycle.
- Vessel PWD-VSL-00015 vents to the vessel vent caustic scrubber (PVP-SCB-00002) via the vessel vent header, overflows to the acidic/alkaline effluent vessel (PWD-VSL-00016), and ultimately overflows to vessel PWD-VSL-00033. Breakpot PWD-BRKPT-00015 vents to scrubber PVP-SCB-00002 via the vessel vent header and overflows to vessel PWD-VSL-00015.

4.9.10 Acidic/Alkaline Effluent Vessel (PWD-VSL-00016)

Routine Operations

The vessel is sized to accommodate one wash/cleaning cycle from ultrafiltration with allowances for the other small streams that are received along with enough space to neutralize material.

During normal operations, vessel PWD-VSL-00016 receives acidic/alkaline effluent from the following sources:

- Alkaline Acidic cleaning effluent via breakpot PWD-BRKPT-00016 from ultrafiltration feed vessels (UFP-VSL-00002A/B)
- Caustic leach solutions (UFP-VSL-00062A/B/C)
- Ultrafiltration solides wash (UFP-VSL-00062A/B/C)
- Nitric acid, demineralized water, and sodium hydroxide drains from reagent bulge UFP-BULGE-00002

Non-Routine Operations that Could Affect Corrosion/Erosion

- During non-routine operations, vessel PWD-VSL-00016 receives acidic/alkaline effluent from the following sources:
  - Caustic rinse from cesium ion exchange via caustic rinse collection tank (CXP-VSL-00004)
  - Caustic rinse from cesium ion exchange columns (CXP-IX-00001/2/3/4).
  - Process condensate from cesium nitric acid recovery (CNP-HX-00002, 3 and 4).
  - Alkline cleaning effluent via breakpot PWD-BRKPT-00016 from Ultrafiltration Feed Vessels (UFP-VSL-00002A/B).
  - Plant wash from PWD-VSL-00044.
  - Overflow from PWD-VSL-00015

PLANT ITEM MATERIAL SELECTION DATA SHEET

R10667002

PWD-VSL-00033, (PTF)
Ultimate Overflow Vessel

- Design Temperature (°F)(max/min): 225/0
- Design Pressure (psig) (max/min): 15/FV
- Location: out cell
- PJM Discharge Velocity (fps): 40
- Drive Cycle: 17 % (at 40 fps)

ISSUED BY
RPP-WTP PDC

Offspring items

PWD-VSL-00131, PWD-VSL-00132
PWD-PJM-00031– PWD-PJM-00038,
PWD-RFD-00131, PWD-RFD-00132

Contents of this document are Dangerous Waste Permit affecting

Operating conditions are as stated on attached Process Corrosion Data Sheet

Operating Modes Considered:

- Normal operating conditions which can range from acidic to alkaline
- Alkaline conditions at elevated temperature
- Acid conditions with elevated halides and temperatures, such as would occur if the tank contained a volume of alkaline waste and two or three volumes of 5 N nitric acid were added.

Materials Considered:

Material (UNS No.)	Relative Cost	Acceptable Material	Unacceptable Material
Carbon Steel	0.23		X
304L (S30403)	1.00		X
316L (S31603)	1.18	X	
6% Mo (N08367/N08926)	7.64	X	
Alloy 22 (N06022)	11.4	X	
Ti-2 (R50400)	10.1		X

Recommended Material: 316 (max 0.030% C; dual certified)

Recommended Corrosion Allowance:0.040 inch (includes 0.024 inch corrosion allowance and 0.016 inch general erosion allowance; localized protection required as discussed in section j)

Process & Operations Limitations:

- Develop rinsing/flushing procedure for acid and water.
- Develop a recovery procedure for non-routine vessel overflows.

STEVEN WAKEMAN VAIL
STATE OF WASHINGTON
39250
REGISTERED PROFESSIONAL ENGINEER
3/8/06
EXPIRES: 12/07/07

Please note that source, special nuclear and byproduct materials, as defined in the Atomic Energy Act of 1954 (AEA), are regulated at the U.S. Department of Energy (DOE) facilities exclusively by DOE acting pursuant to its AEA authority. DOE asserts, that pursuant to the AEA, it has sole and exclusive responsibility and authority to regulate source, special nuclear, and byproduct materials at DOE-owned nuclear facilities. Information contained herein on radionuclides is provided for process description purposes only.

This bound document contains a total of 8 sheets.

REV	DATE	REASON FOR REVISION	PREPARER	CHECKER	APPROVER
2	3/8/06	Issued for Permitting Use			
1	3/27/03	Issued For Permitting Use	DLA	SWV	MWHoffmann
0	9/24/02	Issued For Permitting Use	DLA	JRD	MWHoffman

PLANT ITEM MATERIAL SELECTION DATA SHEET

Corrosion Considerations:

PWD-VSL-00033 receives material from various sources including drains and flushes from waste feed and transfer lines, drains in the C5/R5 cells and bulges, and plant wash from RLD-VSL-00008. During non-routine operations, this vessel could receive overflow material from most systems within Pretreatment.

a General Corrosion
Under normal operation, the concentrations of most chemicals will be sufficiently low that 304L will be satisfactory. Further, in this vessel, the temperatures normally will be sufficiently low that uniform corrosion will not be a concern, the main exceptions being non-routine operations or from ultrafilter cleaning. The amount of fluoride is expected to be small although ultrafilter washing with nitric acid might result in a high acidic fluoride concentration. Wilding and Paige (1976) have shown that in 5% nitric acid with 1000 ppm fluoride at 290°F, the corrosion rate of 304L can be as high as 5 mpy.

Hamner (1981) lists a corrosion rate for 304 (and 304L) in NaOH of less than 20 mpy (500 μm/y) at 77°F and over 20 mpy at 122°F. He shows 316 (and 316L) has a rate of less than 2 mpy up to 122°F and 50% NaOH. Dillon (2000) and Sedriks (1996) both state that the 300 series are acceptable in up to 50% NaOH at temperatures up to about 122°F or slightly above. Divine's work with simulated-radwaste evaporators, six months at 140°F, showed 304L was slightly more resistant to corrosion (<0.2 mpy) than was 316L (<0.6 mpy); Ni 200, pure nickel, was much less resistant (≈7 mpy) probably due to the complexants. Zapp notes that the Savannah River evaporator vessels, operating at about 300°F, are made of 304L and have suffered no failures in about 30 years; 304L heat transfer surfaces have failed however after about 10 years. Ohl & Carlos, in their review of the 242-A Evaporator, found in waste similar to that expected, the corrosion of 304L after about two years of operation at 140°F was less than the accepted variability of the plate.

Davis (1987) states the corrosion rate for 304L in pure NaOH will be less than about 0.11 mpy up to about 212°F though Sedriks (1996) states the data beyond about 122°F are low due to oxidizing agents. Danielson & Pitman (2000), based on short term studies, suggest a corrosion rate of about 0.5 mpy for 316L in simulated waste at boiling, >212°F.

Conclusion:
If the temperature were to remain in the stated operating conditions and the environment were alkaline, 304L would be marginally satisfactory with 316L better.

b Pitting Corrosion
Chloride is known to cause pitting in acid and neutral solutions. Dillon (2000) is of the opinion that in alkaline solutions, pH>12, chlorides are likely to promote pitting only in tight crevices. Dillon and Koch (1995) are of the opinion that fluoride will have little effect. Jenkins (1998) has stated that localized corrosion can occur under the deposits on tubes, probably due to the chlorides. Further, Revie (2000) and Uhlig (1948) note that nitrates inhibit chloride pitting. Wilding and Paige (1976) note that nitric acid inhibits chloride attack though the data are at higher temperatures and concentrations.

Conclusion:
Localized corrosion, such as pitting, is common and would be a concern in waste with the expected maximum halide levels. However, the presence of nitrate will mitigate their effects. Under normal conditions with agitation, 316L is expected to be satisfactory.

c End Grain Corrosion
End grain corrosion only occurs in metal with exposed end grains and in highly oxidizing acid conditions.

Conclusion:
Not applicable to this system.

d Stress Corrosion Cracking
The exact amount of chloride required to cause stress corrosion cracking is unknown. In part this is because the amount varies with temperature, metal sensitization, and the environment. But it is also unknown because chloride tends to concentrate under heat transfer conditions, by evaporation, and electrochemically during a corrosion process. Hence, even as little as 10 ppm can lead to cracking under some conditions. Generally, as seen in Sedriks (1996) and Davis (1987), stress corrosion cracking does not usually occur below about 140°F. If the concentrations are as stated, stress corrosion cracking will be minimized. Although caustic cracking is possible above 140°F, it is not expected under these conditions, probably due to the presence of oxidizing species such as nitrate.

Conclusion:
Because of the normal operating environment, 316L stainless steel is expected to be acceptable.

PLANT ITEM MATERIAL SELECTION DATA SHEET

e Crevice Corrosion
For the most part, the pitting discussion covers this area. Should acid cleaning be used, the presence of excessive heat tint (darker than a light or straw yellow) could lead to crevice corrosion.

Conclusion:
See Pitting

f Corrosion at Welds
Corrosion at welds is not considered a problem in the proposed environment.

Conclusion:
Weld corrosion is not considered a problem for this system.

g Microbiologically Induced Corrosion (MIC)
The proposed operating temperatures are suitable for microbial growth, but the location of the system in the process suggests little chance of the introduction of microbes. Further, the alternation between acidic and alkaline conditions is not conducive to their growth.

Conclusion:
MIC is not expected to be a problem.

h Fatigue/Corrosion Fatigue
Corrosion fatigue is not expected to be a problem in this vessel.

Conclusions
Not considered to be a problem.

i Vapor Phase Corrosion
The vapor phase portion of the vessel will be spattered with solution and pitting or crevice corrosion may be a concern.

Conclusion:
Pitting is a possible concern but is covered by the pitting discussion.

j Erosion
Based on past experiments by Smith & Elmore (1992), the solids are soft and erosion is not expected to be a concern for the vessel wall. Based on 24590-WTP-RPT-M-04-0008, a general erosion allowance of 0.016 inch is adequate for components with maximum solids content up to 27.3 wt%. Additional 316L stainless steel should be provided as localized protection for the applicable portions of the bottom head to accommodate PJM discharge velocities of up to 12 m/s with solids concentrations of 26.7 wt% for a usage of 19 % operation as documented in 24590-WTP-M0C-50-00004. PWD-VSL-00033 requires at least 0.083-inch additional protection. The 26.7 wt% is considered to be conservative and is based on the WTP Prime Contract maximum. During normal operation, the solids content of PWD-VSL-00033 is expected to be well below the anticipated maximum.

The wear of the PJM nozzles can occur from flow for both the discharge and reflood cycles of operation. At least 0.053–inch of additional 316L stainless steel should be provided on the inner surface of the PJM nozzle to accommodate wear due to PJM discharge and suction velocities with solids concentrations of 26.7 wt% for usage of 19 % operation as documented in 24590-WTP-M0C-50-00004.

Conclusion:
The recommended corrosion allowance provides sufficient protection for erosion of the vessel wall. Additional localized protection for the bottom head will accommodate PJM discharge velocities and for the PJM nozzles will accommodate PJM discharge and reflood velocities.

k Galling of Moving Surfaces
Not applicable.

Conclusion:
Not applicable.

l Fretting/Wear
Not expected to be applicable.

Conclusion:
Not a concern.

PLANT ITEM MATERIAL SELECTION DATA SHEET

m Galvanic Corrosion
For the environment and the proposed alloys, galvanic corrosion is not believed to be a concern.

Conclusion:
Not a concern.

n Cavitation
None expected.

Conclusion:
Not believed to be of concern.

o Creep
The temperatures are too low to be a concern.

Conclusion:
Not applicable.

p Inadvertent Nitric Acid Addition
Higher chloride contents and higher temperatures usually require higher alloy materials. Nitrate ions inhibit the pitting and crevice corrosion of stainless alloys. Furthermore, nitric acid passivates these alloys; therefore, lower pH values brought about by increases in the nitric acid content of process fluid will not cause higher corrosion rates for these alloys. The upset condition that was most likely to occur is lowering of the pH of the vessel content by inadvertent addition of 0.5 M nitric acid. Lowering of pH may make a chloride-containing solution more likely to cause pitting of stainless alloys. Increasing the nitric acid content of the process fluid adds more of the pitting-inhibiting nitrate ion to the process fluid. In addition, adding the nitric acid solution to the stream will dilute the chloride content of the process fluid.

Conclusion:
The recommended materials will be able to withstand a plausible inadvertent addition of 0.5 M nitric acid.

PLANT ITEM MATERIAL SELECTION DATA SHEET

References:

1. 24590-WTP-M0C-50-00004, Rev D, *Wear Allowance for WTP Waste Slurry Systems*
2. 24590-WTP-RPT-M-04-0008, Rev. 2, *Evaluation Of Stainless Steel Wear Rates In WTP Waste Streams At Low Velocities*
3. 24590-WTP-RPT-PR-04-0001, Rev. B, *WTP Process Corrosion Data*
4. CCN 097795, Jenkins, CF. SRTC, teleconference with JR Divine, RPP-WTP, 16 February, 2000.
5. CCN 130172, Divine, JR, 1986, Letter to A.J. Diliberto, *Reports of Experimentation*, Battelle, Pacific Northwest Laboratories, Richland, WA 99352
6. CCN 130173, Dillon, CP (Nickel Development Institute), Personal Communication to J R Divine (ChemMet, Ltd., PC), 3 Feb 2000.
7. Danielson, MJ & SG Pitman, 2000, *Corrosion Tests of 316L and Hastelloy C-22 in Simulated Tank Waste Solutions*, PNWD-3015 (BNFL-RPT-019, Rev 0), Pacific Northwest Laboratory, Richland WA.
8. Davis, JR (Ed), 1987, *Corrosion, Vol 13*, In "Metals Handbook", ASM International, Metals Park, OH 44073
9. Hamner, NE, 1981, *Corrosion Data Survey*, Metals Section, 5th Ed, NACE International, Houston, TX
10. Jenkins, CF, 1998, *Performance of Evaporators in High Level Radioactive Chemical Waste Service*, Presented at Corrosion 98, NACE International, Houston TX 77084
11. Koch, GH, 1995, *Localized Corrosion in Halides Other Than Chlorides*, MTI Pub No. 41, Materials Technology Institute of the Chemical Process Industries, Inc, St Louis, MO 63141
12. Ohl, PC & WC Carlos, 1994, *Hanford High-Level Evaporator/Crystallizer Corrosion Evaluation*, WHC-SA-1983-FP, Westinghouse Hanford Co., Richland, WA 99352
13. Revie, WW, 2000. *Uhlig's Corrosion Handbook*, 2nd Edition, Wiley-Interscience, New York, NY 10158
14. Sedriks, AJ, 1996, *Corrosion of Stainless Steels*, John Wiley & Sons, Inc., New York, NY 10158
15. Smith, H. D. and M. R. Elmore, 1992, Corrosion Studies of Carbon Steel under Impinging Jets of Simulated Slurries of Neutralized Current Acid Waste (NCAW) and Neutralized Cladding Removal Waste (NCRW), PNL-7816, Pacific Northwest Laboratory, Richland, Washington.
16. Uhlig, HH, 1948, *Corrosion Handbook*, John Wiley & Sons, New York, NY 10158
17. Wilding, MW & BE Paige, 1976, *Survey on Corrosion of Metals and Alloys in Solutions Containing Nitric Acid*, ICP-1107, Idaho National Engineering Laboratory, Idaho Falls, ID.
18. Zapp, PE, 1998, *Preliminary Assessment of Evaporator Materials of Construction*, BNF—003-98-0029, Rev 0, Westinghouse Savannah River Co., Inc for BNFL Inc.

Bibliography:

1. CCN 130170, Blackburn, LD to PG Johnson, Internal Memo, Westinghouse Hanford Co, *Evaluation of 240-AR Chloride Limit*, August 15, 1991.
2. CCN 130171, Ohl, PC to PG Johnson, Internal Memo, Westinghouse Hanford Co, *Technical Bases for Cl^- and pH Limits for Liquid Waste Tank Cars*, MA: PCO:90/01, January 16, 1990.
3. Agarwal, DC, *Nickel and Nickel Alloys*, In: Revie, WW, 2000. *Uhlig's Corrosion Handbook*, 2nd Edition, Wiley-Interscience, New York, NY 10158
4. Jones, RH (Ed.), 1992, *Stress-Corrosion Cracking*, ASM International, Metals Park, OH 44073
5. Phull, BS, WL Mathay, & RW Ross, 2000, *Corrosion Resistance of Duplex and 4-6% Mo-Containing Stainless Steels i FGD Scrubber Absorber Slurry Environments*, Presented at Corrosion 2000, Orlando, FL, March 26-31, 2000, NACE International, Houston TX 77218.
6. Van Delinder, LS (Ed), 1984, *Corrosion Basics*, NACE International, Houston, TX 77084

PLANT ITEM MATERIAL SELECTION DATA SHEET

24590-WTP-RPT-PR-04-0001, Rev. B
WTP Process Corrosion Data

PROCESS CORROSION DATA SHEET

Component(s) (Name/ID #) Ultimate overflow vessel (PWD-VSL-00033)

Facility PTF

In Black Cell? No

Chemicals	Unit[1]	Contract Maximum		Non-Routine (Note 3)		Notes
		Leach	No leach	Leach	No Leach	
Aluminum	g/l			9.79E+01	7.25E+01	
Chloride	g/l			4.24E+01	3.14E+01	
Fluoride	g/l			5.08E+01	3.76E+01	
Iron	g/l			1.88E+02	1.27E+02	
Nitrate	g/l			6.83E+02	5.80E+02	
Nitrite	g/l			2.34E+02	1.73E+02	
Phosphate	g/l			1.67E+02	1.23E+02	
Sulfate	g/l			9.00E+01	6.66E+01	
Mercury	g/l			1.31E+00	1.83E+00	
Carbonate	g/l			2.57E+02	1.91E+02	
Undissolved solids	wt%			26.7%	26.5%	Note 5
Other (NaMnO4, Pb,...)	g/l					
Other	g/l					
pH	N/A					Note 4
Temperature	°F					Note 2

List of Organic Species:

References

System Description: 24590-PTF-3YD-PWD-00001, Rev 1
Mass Balance Document: 24590-WTP-M4C-V11T-00005, Rev A
Normal Input Stream #: NA
Off Normal Input Stream # (e.g., overflow from other vessels): Note 3
P&ID: 24590-PTF-M6-PWD-P0002, Rev 2
PFD: 24590-PTF-M5-V17T-P0022001, Rev 0
Technical Reports:

Notes:

1. Concentrations less than 1x 10^{-4} g/l do not need to be reported; list values to two significant digits max.
2. T normal operation 59 °F to 77 °F (24590-PTF-MVC-PWD-00029, Rev 0)
3. Receives streams from FRP-VSL-00002ABCD, FEP-VSL-00017AB, FEP-VSL-00005, TLP-VSL-00009, TCP-VSL-00001, HLP-VSL-00022, HLP-VSL-00027AB, HLP-VSL-00028, UFP-VSL-00002, UFP-VSL-00062AB, CXP-VSL-00001, CXP-VSL-00005, CXP-VSL-00026ABC, RDP-VSL-00002, CNP-VSL-00003/4, CNP-DIST-00001, CNP-EVAP-00001, PVP-HEME-00001ABC, PVP-VSL-00001, PWD-VSL-00015/16/43/44, RLD-VSL-00017AB
4. Receives numerous streams, mainly highly basic (pH 13 to 14), with the exception of the RDP and CNP component streams which can be as low as pH 0.2
5. Overflow is diluted to Newtonian fluid with water as soon as normal operation is achieved. Expected minimum dilution ratio 1.5.

Assumptions:

4.9.11 Ultimate Overflow Vessel (PWD-VSL-00033)

Routine Operations

PWD-VSL-00033 is located at the -45 ft level in a pit that allows limited remote access to equipment. It has a batch volume of 15,000 gallons. The vessel is sized to handle the highest overflow rate for 30 minutes and/or match the size of PWD-VSL-00043 since both of these vessels are in the pit of the PT facility.

Vessel PWD-VSL-00033 receives material during normal operations from the following sources:

- Pipe and annulus drains and flushes from waste feed and transfer lines between facilities
- Gravity drains from C5/R5 cells located above elevation 0 ft 0 in.
- All gravity drains from C5/R5 process bulges
- C5 floor drains
- All gravity drains from C5/R5 sample cabinets
- Line flushes from the laboratory drains
- Plant wash from RLD-VSL-00008 via RLD-BRKPT-00004
- C3 overflow and drain headers
- An air in-bleed and forced purge air are provided to dilute hydrogen generated in vessel PWD-VSL-00033. Wash rings are used for vessel washing. RFDs transfer the effluent from PWD-VSL-00033 to PWD-VSL-00044.
- Reverse flow diverters transfer the effluent from vessel PWD-VSL-00033 to PWD-VSL-00044.
- Vessel PWD-VSL-00033 vents to the vessel vent caustic scrubber (PVP-SCB-00002) via the vessel vent header.

Non-Routine Operations that Could Affect Corrosion/Erosion

- Vessel PWD-VSL-00033 initially overflows to PWD-VSL-00043 and ultimately to PWD-SUMP-00040. Ejectors are used to transfer the sump contents to vessel PWD-VSL-00043 or back to PWD-VSL-00033.
- During flooding of the hot cell, vessel PWD-VSL-00033 receives discharge from hot cell east cell floor drain PWD-FD-00006.
- A vessel-emptying ejector is used for non-routine transfers to the plant wash vessel (PWD-VSL-00044) via PWD-BRKPT-00008. This ejector uses process condensate as a motive force instead
- of steam.
- During abnormal operations, vessel PWD-VSL-00033 receives overflow material from the following sources. Most of these sources will enter PWD-VSL-00033 via one of two headers, either the C5 overflow header or the C3 overflow header.
    - Waste feed receipt vessels (FRP-VSL-00002A/B/C/D)
    - Waste feed evaporator feed vessels (FEP-VSL-00017A/B)
    - Waste feed evaporator condensate vessel (FEP-VSL-00005)
    - HLW effluent transfer vessel (PWD-VSL-00043)

PLANT ITEM MATERIAL SELECTION DATA SHEET

- Ultrafiltration feed preparation vessels (UFP-VSL-00001A/B)
- Ultrafiltration feed vessels (UFP-VSL-00002A/B)*
- Ultrafilter permeate collection vessels (UFP-VSL-00062A/B/C)
- Cs IX feed vessel (CXP-VSL-00001)
- Cs IX caustic rinse collection vessel (CXP-VSL-00004)
- Cs IX reagent vessel (CXP-VSL-00005)
- Eluate contingency storage vessel (CNP-VSL-00003)
- Cs evaporator recovered nitric acid vessel (CNP-VSL-00004)
- Acidic/alkaline effluent vessels (PWD-VSL-00015/PWD-VSL-00016)
- Plant wash vessel (PWD-VSL-00044)
- LAW SBS condensate receipt vessels (TLP-VSL-00009A/B)
- Treated LAW concentrate storage vessel (TCP-VSL-00001)
- Treated LAW evaporator condensate vessel (TLP-VSL-00002)
- HLW feed receipt vessel (HLP-VSL-00022)
- HLW lag storage vessels (HLP-VSL-00027A/B)*
- HLW feed blend vessel (HLP-VSL-00028)*
- Spent resin slurry vessels (RDP-VSL-00002A/B/C)
- Vessel vent caustic scrubber (PVP-SCB-00002)
- Vessel vent HEME drain collection vessel (PVP-VSL-00001)
- Alkaline effluent vessels (RLD-VSL-00017A/B)
- PJV drain collection vessel (PJV-VSL-00002)
- Cs IX treated LAW collection vessels (CXP-VSL-00026A/B/C)
- Hot cell east berm floor drain (PWD-FD-00006)
- Waste feed evaporator separator vessels (FEP-SEP-00001A/B) (in case of loss of circulation in the evaporators)

Overflows from non-Newtonian vessels (marked with *) will be diluted with water as soon as normal operation is achieved/recovered. Minimum dilution ratio (water/fluid) of 1.5 is expected.

During abnormal operations, vessel PWD-VSL-00033 could also receive material from PWD-SUMP-00040 via PWD-EJCTR-00062.

PLANT ITEM MATERIAL SELECTION DATA SHEET

R10661549

PWD-VSL-00046 (PTF)
C3 Floor Drain Collection Vessel

- Design Temperature (°F)(max/min): 225/20
- Design Pressure (psig) (max/min): 68/FV
- Location: outcell

ISSUED BY
APP-WTP PDC

Contents of this document are Dangerous Waste Permit affecting

Operating conditions are as stated on attached Process Corrosion Data Sheet

Options Considered:

- Normal operating conditions
- Assumption: water provided by BOF will be treated

Materials Considered:

Material (UNS No.)	Relative Cost	Acceptable Material	Unacceptable Material
Carbon Steel	0.23		X
304L (S30403)	1.00		X
316L (S31603)	1.18	X	
6% Mo (N08367/N08926)	7.64	X	
Alloy 22 (N06022)	11.4	X	
Ti-2 (R50400)	10.1	X	

Recommended Material: 316 (max 0.030% C; dual certified)

Recommended Corrosion Allowance: 0.040 inch (includes 0.024 inch corrosion allowance and 0.004 inch erosion allowance)

Process & Operations Limitations:

- Develop rinsing/flushing procedure for acid and water

STEVEN WAKEMAN VAIL
STATE OF WASHINGTON
39250
REGISTERED
PROFESSIONAL ENGINEER
1/6/06
EXPIRES: 12/07/07

Please note that source, special nuclear and byproduct materials, as defined in the Atomic Energy Act of 1954 (AEA), are regulated at the U.S. Department of Energy (DOE) facilities exclusively by DOE acting pursuant to its AEA authority. DOE asserts, that pursuant to the AEA, it has sole and exclusive responsibility and authority to regulate source, special nuclear, and byproduct materials at DOE owned nuclear facilities. Information contained herein on radionuclides is provided for process description purposes only.

This bound document contains a total of 6 sheets.

REV	DATE	REASON FOR REVISION	PREPARER	CHECKER	APPROVER
2	1/6/06	Issued for Permitting Use			
1	6/25/04	Issued for Permitting Use	DLA	JRD	MWH
0	9/24/02	Issued for Permitting Use	DLA	JRD	MWH

PLANT ITEM MATERIAL SELECTION DATA SHEET

Corrosion Considerations:

PWD-VSL-00046 normally receives floor drains from all C3 areas in the PT facility generated from normal cleanup activities or small leaks as well as any material in the pit sump. During abnormal operations, the vessel could receive sprinkler water discharge from the C3 area sprinkler system. Additionally, solids could be introduced through the floor drains.

a General Corrosion
In normal operation, the vessel will essentially contain water. Based on Uhlig (1948), little uniform corrosion is expected at these conditions. The stated solutions are compatible with the 300 series stainless steel.

Conclusion:
304L or 316L is expected to be sufficiently resistant to the waste solution with a probable general corrosion rate of less than 1 mpy.

b Pitting Corrosion
Normally the vessel is to operate between 50 and 77°F at neutral pH. At this temperature and with the stated waste, 304L has the potential of pitting, particularly if the liquid is stagnant. Because of the water sources, it is likely that the water will contain dirt and other solids. Additionally, any sand tracked into the building will end up in the drain tank. Consequently, the likelihood of pitting will be higher. The time to initiate would depend on the concentration of the residual chlorides, the cleanliness, and the temperature. Depending on expected conditions, at least 304L and probably more pitting resistant alloys will be needed.

Conclusion:
Localized corrosion, such as pitting, is common but can be mitigated, if caused by chlorides, by alloys with higher molybdenum contents. Based on the expected operating conditions, and the possibility of the presence of solids, the more pitting-resistant 316L is recommended.

c End Grain Corrosion
End grain corrosion only occurs in metal with exposed end grains and in highly oxidizing acid conditions.

Conclusion:
Not applicable.

d Stress Corrosion Cracking
The exact amount of chloride required to cause stress corrosion cracking is unknown. In part this is because the amount varies with temperature, metal sensitization, and the environment. But it is also unknown because chloride tends to concentrate under heat transfer conditions, by evaporation, and electrochemically during a corrosion process. Hence, even as little as 10 ppm can lead to cracking under some conditions. Generally, as seen in Sedriks (1996) and Davis (1987), chloride stress corrosion cracking does not usually occur below about 140°F and 304L is expected to be satisfactory. A better long-term choice would be 316L.

Conclusion:
At the normal operating environment and due to anticipated abnormal conditions, the minimum alloy recommended is a 316L stainless.

e Crevice Corrosion
At the proposed operating temperature, if deposits or other crevices are present, 304L is not acceptable. The applicability of 316L for this waste is accepted if no significant deposits are present. In addition, see Pitting.

Conclusion:
It is assumed that no deposits form and the no other crevices are present. Therefore, 316L is acceptable.

f Corrosion at Welds
Corrosion at welds is not considered a problem in the proposed environment.

Conclusion:
Weld corrosion is not considered a problem for this system.

PLANT ITEM MATERIAL SELECTION DATA SHEET

g Microbiologically Induced Corrosion (MIC)
The normal operating conditions are ideal for microbial growth if the system is infected. However, the most likely source of infection is process water so the use of treated water makes infection unlikely.

Conclusion:
Not expected to be a concern.

h Fatigue/Corrosion Fatigue
Corrosion fatigue does not appear to be a concern.

Conclusions
Not expected to be a concern.

i Vapor Phase Corrosion
Vapor phase corrosion will be a function the degree of agitation, solution chemistry, and temperature. Nonetheless, it is not deemed a problem in this tank.

Conclusion:
Not likely to be a concern.

j Erosion
Velocities are expected to be low. Erosion allowance of 0.004 inch for components with low solids content (< 2 wt%) at low velocities is based on 24590-WTP-RPT-M-04-0008.

Conclusion:
Not expected to be a concern.

k Galling of Moving Surfaces
Not applicable.

Conclusion:
Not applicable.

l Fretting/Wear
No contacting surfaces expected.

Conclusion:
Not applicable.

m Galvanic Corrosion
No significantly dissimilar metals are present.

Conclusion:
Not expected to be a concern.

n Cavitation
None expected.

Conclusion:
Not believed to be of concern.

o Creep
The temperatures are too low to be a concern.

Conclusion:
Not applicable.

p Inadvertent Nitric Acid Addition
The upset condition that was most likely to occur is lowering of the pH of the vessel content by inadvertent addition of .5 M nitric acid. Nitric acid passivates these alloys; therefore, lower pH values brought about by increases in the nitric acid content of process fluid will not cause high corrosion rates for these alloys.

Conclusion:
The recommended materials will be able to withstand a plausible inadvertent addition of .5 M nitric acid.

PLANT ITEM MATERIAL SELECTION DATA SHEET

References:

1. 24590-WTP-RPT-M-04-0008, Rev. 2, *Evaluation Of Stainless Steel Wear Rates In WTP Waste Streams At Low Velocities*
2. 24590-WTP-RPT-PR-04-0001, Rev. B, *WTP Process Corrosion Data*
3. Davis, JR (Ed), 1987, *Corrosion, Vol 13*, In "Metals Handbook", ASM International, Metals Park, OH 44073
4. Sedriks, AJ, 1996, *Corrosion of Stainless Steels*, John Wiley & Sons, Inc., New York, NY 10158
5. Uhlig, HH, 1948, *Corrosion Handbook*, John Wiley & Sons, New York, NY 10158

Bibliography:

1. CCN 130171, Ohl, PC to PG Johnson, Internal Memo, Westinghouse Hanford Co, *Technical Bases for Cl- and pH Limits for Liquid Waste Tank Cars*, MA: PCO:90/01, January 16, 1990.
2. CCN 130173, Dillon, CP (Nickel Development Institute), Personal Communication to J R Divine (ChemMet, Ltd., PC), 3 Feb 2000.
3. Agarwal, DC, *Nickel and Nickel Alloys*, In: Revie, WW, 2000. *Uhlig's Corrosion Handbook*, 2nd Edition, Wiley-Interscience, New York, NY 10158
4. Davis, JR (Ed), 1994, *Stainless Steels*, In ASM Metals Handbook, ASM International, Metals Park, OH 44073
5. Hamner, NE, 1981, *Corrosion Data Survey*, Metals Section, 5th Ed, NACE International, Houston, TX 77218
6. Jones, RH (Ed.), 1992, *Stress-Corrosion Cracking*, ASM International, Metals Park, OH 44073
7. Koch, GH, 1995, *Localized Corrosion in Halides Other Than Chlorides*, MTI Pub No. 41, Materials Technology Institute of the Chemical Process Industries, Inc, St Louis, MO 63141
8. Van Delinder, LS (Ed), 1984, *Corrosion Basics*, NACE International, Houston, TX 77084

PLANT ITEM MATERIAL SELECTION DATA SHEET

24590-WTP-RPT-PR-04-0001, Rev. B
WTP Process Corrosion Data

PROCESS CORROSION DATA SHEET

Component(s) (Name/ID #) C3 floor drain collection vessel (PWD-VSL-00046)

Facility PTF

In Black Cell? No

Chemicals	Unit[1]	Contract Maximum		Non-Routine		Notes
		Leach	No leach	Leach	No Leach	
Aluminum	g/l					
Chloride	g/l					
Fluoride	g/l					
Iron	g/l					
Nitrate	g/l					
Nitrite	g/l					
Phosphate	g/l					
Sulfate	g/l					
Mercury	g/l					
Carbonate	g/l					
Undissolved solids	wt%					
Other (NaMnO4, Pb,...)	g/l					
Other	g/l					
pH	N/A					Assumption 1
Temperature	°F					Assumption 2

List of Organic Species:

References

System Description 24590-PTF-3YD-PWD-00001, Rev 1
Mass Balance Document: 24590-WTP-M4C-V11T-00005, Rev A
Normal Input Stream #: See section 4.9.15, Routine Operations
Off Normal Input Stream # (e.g., overflow from other vessels) See section 4.9.15, Non-routine Operations
P&ID 24590-PTF-M6-PWD-P0043, Rev 2
GA: 24590-PTF-P1-P01T-P0006, Rev 2
Technical Reports:

Notes:

1. Concentrations less than 1x 10^{-4} g/l do not need to be reported; list values to two significant digits max

Assumptions:

1. Assume pH 7.0
2. Assume 50 °F (fire water) to 77 °F (any vessel heel present)

PLANT ITEM MATERIAL SELECTION DATA SHEET

4.9.15 C3 Floor Drain Collection Vessel (PWD-VSL-00046)

Routine Operations

During normal operations, vessel PWD-VSL-00046 receives floor drains from all C3 areas in the PT facility generated from normal cleanup activities or small leaks. PWD-VSL-00046 will also receive any material in the pit sump.

Transfers out of the vessel will normally go to RLD-VSL-00017A/B. If needed, this vessel may be sampled and if the material meets the BOF nonradioactive liquid waste disposal system (NLD) acceptance criteria, it may be transferred to PWD-VSL-00045. Transfers from PWD-VSL-00046 to PWD-VSL-00045 will require installation of a removable spool piece.

Vessel PWD-VSL-00046 vents to the pit via a local HEPA filter and will overflow into the pit.

Non-Routine Operations that Could Affect Corrosion/Erosion

During abnormal operations, vessel PWD-VSL-00046 receives sprinkler water discharge from the C3 area sprinkler system. Miscellaneous solids could be introduced into the vessel through the floor drains. Water in the pit sump PWD-SUMP-00071 is transferred to PWD-VSL-00045 or PWD-VSL-00046.

PLANT ITEM MATERIAL SELECTION DATA SHEET

PWD-BRKPT-00007/08/09/10/17/19 (PTF)
Breakpots

- Design Temperature (°F)(Max/min): 368/40
- Design Pressure (psig) (Max/min): 15/FV
- Location: incell

ISSUED BY
RPP-WTP PDC
INIT DATE

Contents of this document are Dangerous Waste Permit affecting

Operating conditions are as stated on attached Material Selection Data Sheet

Operating Conditions Considered:

- Breakpots may transfer plant wash from multiple systems to PWD-VSL-00044.
- Breakpots may receive emptying ejector discharge from multiple vessels.
- Breakpots will receive 2M Nitric and 2M Caustic cleaning solutions.
- Operation at or approaching steam temperatures will be of short duration.

Materials Considered:

Material (UNS No.)	Relative Cost	Acceptable Material	Unacceptable Material
Carbon Steel	0.23		X
304L (S30403)	1.00	X	
316L (S31603)	1.18	X	
6% Mo (N08367/N08926)	7.64	X	
Alloy 22 (N06022)	11.4	X	
Ti-2 (R50400)	10.1		X

Recommended Material: 304 (max 0.030% C; dual certified)

Recommended Corrosion Allowance: 0.04 inch

Process & Operations Limitations:

- Develop rinsing/flushing procedure for acid and water
- Breakpots will be maintained clean and dry between uses

STEVEN WAKEMAN VAIL
STATE OF WASHINGTON
39250
REGISTERED PROFESSIONAL ENGINEER
2/19/04
EXPIRES: 12/07/05

Please note that source, special nuclear and byproduct materials, as defined in the Atomic Energy Act of 1954 (AEA), are regulated at the U.S. Department of Energy (DOE) facilities exclusively by DOE acting pursuant to its AEA authority. DOE asserts, that pursuant to the AEA, it has sole and exclusive responsibility and authority to regulate source, special nuclear, and byproduct materials at DOE-owned nuclear facilities. Information contained herein on radionuclides is provided for process description purposes only.

This bound document contains a total of 5 sheets.

REV	DATE	REASON FOR REVISION	PREPARER	CHECKER	APPROVER
0	2/17/04	Issued for Permitting Use			A.P. Langos

PLANT ITEM MATERIAL SELECTION DATA SHEET

Corrosion Considerations:

a General Corrosion
Hamner (1981) lists a corrosion rate for 304 (and 304L) in NaOH of less than 20 mpy. The corrosion rate for 316L is shown as less than 2 mpy. Davis (1994) states the corrosion rate for 304L in pure NaOH will be less than about 0.1 mpy up to about 125°F. Either 304L or 316L can be used for up to 30% (≈10 M) and temperatures to boiling without concern – 316L may be better for NaOH highly contaminated with NaCl Both the Avesta Corrosion Handbook (1999) and the Occidental Chemical Caustic Soda Handbook (2000) approve of the 300 series at up to about 200°F.

Hamner (1981) lists a corrosion rate for 304 (and 304L) in 2 M HNO_3 of less than 2 mpy Davis (1994) states the corrosion rate for 304L in 12% HNO_3 will be less than about 1 mpy up to about 212°F.

Conclusion:
Operations at or approaching steam temperatures are expected to be of short duration. Provided any rinsing or flushing is performed below this temperature, 304L is suitable.

b Pitting Corrosion
At the concentrations temperatures used, NaOH will not pit 304L. There is some potential for pitting if the NaOH is contaminated with NaCl. At the concentrations and temperatures used, nitric acid will not pit 304L.

Conclusion
Pitting is not considered a problem.

c End Grain Corrosion
End grain corrosion only occurs in metal with exposed end grains and in highly oxidizing acid conditions.

Conclusion:
Not expected in this system.

d Stress Corrosion Cracking
The exact amount of chloride required to stress corrosion crack stainless steel is unknown. In part, this is because the amount varies with temperature, metal sensitization, and the environment. But it is also unknown because chloride tends to concentrate under heat transfer conditions, by evaporation, and electrochemically during a corrosion process. Hence, even as little as 10 ppm can lead to cracking under some conditions. According to Sedriks (1996) and Davis (1987), it is observed that alkaline conditions reduce the probability of the initiation of stress corrosion cracking to essentially zero. Further, the use of "L" grade stainless reduces the opportunity for sensitization.

Conclusion:
The use of 304L is expected to be acceptable for the stated conditions.

e Crevice Corrosion
See Pitting.

Conclusion:
See Pitting

f Corrosion at Welds
Weld corrosion is not considered a problem for this system.

Conclusion:
Not a concern.

g Microbiologically Induced Corrosion (MIC)
The proposed operating conditions are not conducive to microbial growth.

Conclusion:
MIC is not considered a problem.

h Fatigue/Corrosion Fatigue
Corrosion fatigue is a not expected to be a problem.

Conclusions
Not expected to be a concern.

i Vapor Phase Corrosion
Not expected to be a problem.

Conclusion:
Not expected to be a problem.

PLANT ITEM MATERIAL SELECTION DATA SHEET

j Erosion
Velocities within the vessel are not expected to be high.

Conclusion:
Not considered to be a concern.

k Galling of Moving Surfaces
Not applicable.

Conclusion:
Not applicable.

l Fretting/Wear
No contacting surfaces expected.

Conclusion:
Not applicable.

m Galvanic Corrosion
No dissimilar metals are present.

Conclusion:
Not applicable.

n Cavitation
None expected.

Conclusion.
Not believed to be of concern.

o Creep
The temperatures are too low to be a concern.

Conclusion:
Not applicable.

PLANT ITEM MATERIAL SELECTION DATA SHEET

References:

1. Avesta Sheffield Corrosion Handbook, 1999, 8th Ed., Avesta, Sweden
2. Davis, JR (Ed), 1987, *Corrosion, Vol 13*, In "Metals Handbook", ASM International, Metals Park, OH 44073
3. Davis, JR (Ed), 1994, *Stainless Steels*, In ASM Metals Handbook, ASM International, Metals Park, OH 44073
4. Hamner, NE, 1981, *Corrosion Data Survey*, Metals Section, 5th Ed, NACE International, Houston, TX 77218
5. Occidental Chemical Corporation, *Caustic Soda Handbook*, 2000, Dallas, TX 75244
6. Sedriks, AJ, 1996, *Corrosion of Stainless Steels*, John Wiley & Sons, Inc., New York, NY 10158

Bibliography:

1. Uhlig, HH, 1948, *Corrosion Handbook*, John Wiley & Sons, New York, NY 10158
2. Zapp, PE, 1998, *Preliminary Assessment of Evaporator Materials of Construction*, BNF—003-98-0029, Rev 0, Westinghouse Savannah River Co., Inc for BNFL Inc.

PLANT ITEM MATERIAL SELECTION DATA SHEET

OPERATING CONDITIONS

Material Selection Data Sheets for The Pretreatment Facility

Materials Selection Data

Component (Name/ID) PWD-BRKPT-00006/07/08/09/10/17/19
System PWD

Operations

Chemicals	Unit	Cold Startup	Normal Operation*	Standby/Idle	Cleaning	Accident
Aluminum	g/l	N/A	N/A See Comments	N/A	N/A	N/A
Chloride	g/l					
Fluoride	g/l					
Hydroxide	g/l					
Iron	g/l					
Nitrate	g/l					
Nitrite	g/l					
Phosphate	g/l					
TOC[†]	g/l					
Sulfate	g/l					
Undissolved solids	g/l					
Particle size/hardness	µm (##)					
Other (Hg)	g/l					
Carbonate	g/l					
pH	-					
Dose rate, α, β/γ (inside)	Rad					
Temperature	°C					
Velocity	fps					
Vibration						
Time of exposure	#					

* Based on Contract Maximum Chemical A/D run at 60/6

- % of total; ## - use Mho scale

Remarks:

Comments: These 7 breakpots will only be rarely used. They receive material from the PT sumps and from vessel emptying ejectors only and will normally be empty. These breakpots will receive 2M Nitric and 2M Caustic cleaning solutions.

[X] Black Cell

[†] List expected organic species: N/A

[X] Flushing

Use maximum of 2 significant figures

N/A = Information not available or not in Process Engineering Scope

PLANT ITEM MATERIAL SELECTION DATA SHEET

R10672005

ISSUED BY
RPP-WTP PDC

PWD-BRKPT-00015 & PWD-BRKPT-00016 (PTF)
Acidic/Alkaline Effluent Breakpots

- Design Temperature (°F)(max/min): 368/40
- Design Pressure (psig) (internal/external): 15/FV
- Location: incell

Contents of this document are Dangerous Waste Permit affecting

Operating conditions are as stated on attached Process Corrosion Data Sheet

Options Considered:

- Breakpot will transfer acidic wash.
- Breakpot will transfer alkaline wash.

Materials Considered:

Material (UNS No.)	Relative Cost	Acceptable Material	Unacceptable Material
Carbon Steel	0.23		X
304L (S30403)	1.00	X	
316L (S31603)	1.18	X	
6% Mo (N08367/N08926)	7.64	X	
Alloy 22 (N06022)	11.4	X	
Ti-2 (R50400)	10.1		X

Recommended Material: 304 (max 0.030% C; dual certified)

Recommended Corrosion Allowance: 0.040 inch (includes 0.024 inch corrosion allowance and 0.004 inch erosion allowance)

Process & Operations Limitations:

- Develop rinsing/flushing procedure for acid or water.

STEVEN WAKEMAN VAIL
STATE OF WASHINGTON
39250
REGISTERED PROFESSIONAL ENGINEER
4/18/06
EXPIRES: 12/07/07

Please note that source, special nuclear and byproduct materials, as defined in the Atomic Energy Act of 1954 (AEA), are regulated at the U.S. Department of Energy (DOE) facilities exclusively by DOE acting pursuant to its AEA authority. DOE asserts, that pursuant to the AEA, it has sole and exclusive responsibility and authority to regulate source, special nuclear, and byproduct materials at DOE-owned nuclear facilities. Information contained herein on radionuclides is provided for process description purposes only.

This bound document contains a total of 7 sheets.

REV	DATE	REASON FOR REVISION	PREPARER	CHECKER	APPROVER
1	4/18/06	Issued for Permitting Use		HMK	
0	2/17/04	Issued for Permitting Use	DLA	JRD	APR

PLANT ITEM MATERIAL SELECTION DATA SHEET

Corrosion Considerations:

PWD-BRKPT-00015 routinely receives alkaline cleaning effluent from UFP-VSL-00002A/B and non-routinely may receive acidic cleaning effluent from UFP-VSL-00002A/B. PWD-BRKPT-00016 routinely receives acidic cleaning effluent from UFP-VSL-00002A/B and non-routinely may receive alkaline cleaning effluent from UFP-VSL-00002A/B or plant wash from PWD-VSL-00044.

a General Corrosion
Hamner's data (1981), 304 (and 304L) lists a corrosion rate in NaOH of less than 20 mpy (500 μm/y) at 77°F and over 20 mpy at 122°F. He shows 316 (and 316L) has a rate of less than 2 mpy up to 122°F and 50% NaOH. Dillon (2000) and Sedriks (1996) both state that the 300 series are acceptable in up to 50% NaOH at temperatures up to about 122°F or slightly above. Divine's work (1986) with simulated-radwaste evaporators, six months at 140°F, showed 304L was slightly more resistant to corrosion (<0.2 mpy) than was 316L (<0.6 mpy). Zapp (1998) notes that the Savannah River evaporator vessels, operating at about 300°F, are made of 304L and have suffered no failures in about 30 years; 304L heat transfer surfaces have failed however after about 10 years.

Because the solution is expected to be ≤2M HNO_3, 304L stainless steel is an excellent choice for the material of construction. Corrosion rates of ≤1 mpy are expected.

Conclusion:
At the stated operating conditions, 304L is expected to be sufficiently resistant with a probable general corrosion rate of less than 1 mpy.

b Pitting Corrosion
The vessels are shown to have no chlorides or fluorides under normal operation. Under the stated no-halide conditions, 304L is expected to be satisfactory. It is assumed, however, that the fluids will not be stagnant nor will there be deposits.

Conclusion
At these temperatures and concentrations, pitting is not anticipated and 304L is acceptable.

c End Grain Corrosion
End grain corrosion only occurs in metal with exposed end grains and in highly oxidizing acid conditions.

Conclusion:
Not applicable to this system.

d Stress Corrosion Cracking
If the vessel is halide free, 304L will be satisfactory.

Conclusion:
The use of 304L is expected to be acceptable for chloride free conditions.

e Crevice Corrosion
See Pitting.

Conclusion:
See Pitting

f Corrosion at Welds
Corrosion at welds is not considered a problem in the proposed environment.

Conclusion:
Weld corrosion is not considered a problem for this system.

g Microbiologically Induced Corrosion (MIC)
The proposed operating temperatures are generally acceptable for MIC but the location of the system in the process suggests little chance of the introduction of microbes.

Conclusion:
MIC is not expected to be a problem.

PLANT ITEM MATERIAL SELECTION DATA SHEET

h Fatigue/Corrosion Fatigue
Corrosion fatigue is a not expected to be a problem.

Conclusions
Not expected to be a concern.

i Vapor Phase Corrosion
Not considered to be a concern.

Conclusion:
Not a problem.

j Erosion
Velocities are expected to be low. Erosion allowance of 0.004 inch for components with low solids content (< 2 wt%) at low velocities is based on 24590-WTP-RPT-M-04-0008.

Conclusion:
Not considered to be a concern.

k Galling of Moving Surfaces
Not applicable.

Conclusion:
Not applicable.

l Fretting/Wear
No contacting surfaces expected.

Conclusion:
Not applicable.

m Galvanic Corrosion
No dissimilar metals are present.

Conclusion:
Not applicable.

n Cavitation
None expected.

Conclusion:
Not believed to be of concern.

o Creep
The temperatures are too low to be a concern.

Conclusion:
Not applicable.

p Inadvertent Nitric Acid Addition
Higher chloride contents and higher temperatures usually require higher alloy materials. Nitrate ions inhibit the pitting and crevice corrosion of stainless alloys. Furthermore, nitric acid passivates these alloys; therefore, lower pH values brought about by increases in the nitric acid content of process fluid will not cause higher corrosion rates for these alloys. The upset condition that was most likely to occur is lowering of the pH of the vessel content by inadvertent addition of 0.5 M nitric acid. Lowering of pH may make a chloride-containing solution more likely to cause pitting of stainless alloys. Increasing the nitric acid content of the process fluid adds more of the pitting-inhibiting nitrate ion to the process fluid. In addition, adding the nitric acid solution to the stream will dilute the chloride content of the process fluid.

Conclusion:
The recommended materials will be able to withstand a plausible inadvertent addition of 0.5 M nitric acid for a limited period.

PLANT ITEM MATERIAL SELECTION DATA SHEET

References:

1. 24590-WTP-RPT-M-04-0008, Rev. 2, *Evaluation Of Stainless Steel Wear Rates In WTP Waste Streams At Low Velocities*
2. 24590-WTP-RPT-PR-04-0001, Rev. B, *WTP Process Corrosion Data*
3. CCN 130172, Divine, JR, 1986, Letter to A.J. Diliberto, *Reports of Experimentation*, Battelle, Pacific Northwest Laboratories, Richland, WA 99352
4. CCN 130173, Dillon, CP (Nickel Development Institute), Personal Communication to J R Divine (ChemMet, Ltd., PC), 3 Feb 2000.
5. Hamner, NE, 1981, *Corrosion Data Survey*, Metals Section, 5th Ed, NACE International, Houston, TX 77218
6. Sedriks, AJ, 1996, *Corrosion of Stainless Steels*, John Wiley & Sons, Inc., New York, NY 10158
7. Zapp, PE, 1998, *Preliminary Assessment of Evaporator Materials of Construction*, BNF—003-98-0029, Rev 0, Westinghouse Savannah River Co., Inc for BNFL Inc.

Bibliography:

1. Davis, JR (Ed), 1987, *Corrosion, Vol 13*, In "Metals Handbook", ASM International, Metals Park, OH 44073
2. Davis, JR (Ed), 1994, *Stainless Steels*, In ASM Metals Handbook, ASM International, Metals Park, OH 44073
3. Uhlig, HH, 1948, *Corrosion Handbook*, John Wiley & Sons, New York, NY 10158

PLANT ITEM MATERIAL SELECTION DATA SHEET

24590-WTP-RPT-PR-04-0001, Rev. B
WTP Process Corrosion Data

PROCESS CORROSION DATA SHEET

Component(s) (Name/ID #) Acidic/Alkaline effluent breakpot (PWD-BRKPT-00015)

Facility PTF

In Black Cell? Yes

Chemicals	Unit[1]	Contract Maximum		Non-Routine		Notes
		Leach	No leach	Leach	No Leach	
Aluminum	g/l					
Chloride	g/l					
Fluoride	g/l					
Iron	g/l					
Nitrate	g/l					
Nitrite	g/l					
Phosphate	g/l					
Sulfate	g/l					
Mercury	g/l					
Carbonate	g/l					
Undissolved solids	wt%					
Other (NaMnO4, Pb,...)	g/l					
Other	g/l					
pH	N/A					
Temperature	°F					Note 2

List of Organic Species:

References

System Description: 24590-PTF-3YD-PWD-00001, Rev 1
Mass Balance Document: 24590-WTP-M4C-V11T-00005, Rev A
Normal Input Stream #: UFP27,28 cleaning effluents (see section 4.9.5, Routine)
Off Normal Input Stream # (e.g., overflow from other vessels): see section 4.9.5, Non-routine
P&ID: 24590-PTF-M6-PWD-P0003, Rev 0
PFD: 24590-PTF-M5-V17T-P0022001, Rev 0
Technical Reports:

Notes:

1. Concentrations less than 1x 10^{-4} g/l do not need to be reported; list values to two significant digits max.
2. Steam is used for transfer. The breakpot is normally empty and at ambient temperature most of the time.

Assumptions:

PLANT ITEM MATERIAL SELECTION DATA SHEET

24590-WTP-RPT-PR-04-0001, Rev. B
WTP Process Corrosion Data

PROCESS CORROSION DATA SHEET

Component(s) (Name/ID #) Acidic/alkaline effluent breakpot (PWD-BRKPT-00016)

Facility PTF

In Black Cell? Yes

Chemicals	Unit[1]	Contract Maximum		Non-Routine		Notes
		Leach	No leach	Leach	No Leach	
Aluminum	g/l					
Chloride	g/l					
Fluoride	g/l					
Iron	g/l					
Nitrate	g/l					
Nitrite	g/l					
Phosphate	g/l					
Sulfate	g/l					
Mercury	g/l					
Carbonate	g/l					
Undissolved solids	wt%					
Other (NaMnO4, Pb,...)	g/l					
Other	g/l					
pH	N/A					
Temperature	°F					Note 2

List of Organic Species:

References

System Description: 24590-PTF-3YD-PWD-00001, Rev 1
Mass Balance Document: 24590-WTP-M4C-V11T-00005, Rev A
Normal Input Stream #: See section 4.9.6
Off Normal Input Stream # (e.g., overflow from other vessels): PWD02, cleaning effluent (section 4.9.6)
P&ID: 24590-PTF-M6-PWD-P0003, Rev 0
PFD: 24590-PTF-M5-V17T-P0022001 Rev. 0
Technical Reports:

Notes:

1. Concentrations less than 1x 10^{-4} g/l do not need to be reported; list values to two significant digits max.
2. Steam is used for transfer. The breakpot is normally empty and at ambient temperature most of the time.

Assumptions:

4.9.5 Acidic/Alkaline Effluent Breakpot(PWD-BRKPT-00015)

Routine Operations

Receives alkaline cleaning effluent from UFP-VSL-00002A/B. This breakpot serves as a moisture separator for ejected plant wash from PT vessels. The breakpot does not accumulate any fluid.

Non-Routine Operations that Could Affect Corrosion/Erosion

Receives acidic cleaning effluent from UFP-VSL-00002A/B.

4.9.6 Acidic /Alkaline Effluent Breakpot (PWD-BRKPT-00016)

Routine Operations

Receives acidic cleaning effluent from UFP-VSL-00002A/B.
This breakpot serves as a moisture separator for ejected plant wash from PT vessels. The breakpot does not accumulate any fluid.

Non-Routine Operations that Could Affect Corrosion/Erosion

Receives alkaline cleaning effluent from UFP-VSL-00002A/B. Receives plant wash from PWD-VSL-00044.

PLANT ITEM MATERIAL SELECTION DATA SHEET

R10663180

RDP-VSL-00002A/B/C (PTF)
Spent Resin Slurry Vessels

ISSUED BY
RPP-WTP PDC

- Design Temperature (°F)(max/min): 138/30
- Design Pressure (psig) (max/min): 15/FV
- Location: incell
- PJM Discharge Velocity (fps): 40
- Drive Cycle: 17 % (at 40 fps)

Associated Items

RDP-PJM-00001 – RDP-PJM-00012

Contents of this document are Dangerous Waste Permit affecting

Operating conditions are as stated on attached Process Corrosion Data Sheets

Options Considered:

- Normal operations include receipt, storage and transfer of spent IX media
- Slurry received contains approximately 20 volume% solids (not considered normal operating condition)
- Off-normal conditions include the receipt of fresh resin overflow from system CRP and the receipt of un-eluted or off-spec Cs resin to be returned for further elution

Materials Considered:

Material (UNS No.)	Relative Cost	Acceptable Material	Unacceptable Material
Carbon Steel	0.23		X
304L (S30403)	1.00		X
316L (S31603)	1.18	X	
6% Mo (N08367/N08926)	7.64	X	
Alloy 22 (N06022)	11.4	X	
Ti-2 (R50400)	10.1	X	

Recommended Material: 316 (max 0.030% C; dual certified)

Recommended Corrosion Allowance: 0.040 inch (includes 0.024 inch corrosion allowance and 0.016 inch general erosion allowance; localized protection will be provided as necessary as discussed in section j)

Process & Operations Limitations:

- Develop flushing/rinsing procedure

STEVEN WAKEMAN VAIL
STATE OF WASHINGTON
39250
REGISTERED PROFESSIONAL ENGINEER
EXPIRES: 12/07/07

1/19/06

Please note that source, special nuclear and byproduct materials, as defined in the Atomic Energy Act of 1954 (AEA), are regulated at the U.S. Department of Energy (DOE) facilities exclusively by DOE acting pursuant to its AEA authority. DOE asserts, that pursuant to the AEA, it has sole and exclusive responsibility and authority to regulate source, special nuclear, and byproduct materials at DOE-owned nuclear facilities. Information contained herein on radionuclides is provided for process description purposes only.

This bound document contains a total of 6 sheets.

REV	DATE	REASON FOR REVISION	PREPARER	CHECKER	APPROVER
2	1/19/06	Issued for Permitting Use			
1	1/24/05	Issued for Permitting Use	DLA	APR	SWV
0	4/26/04	Issued for Permitting Use	DLA	JRD	APR

PLANT ITEM MATERIAL SELECTION DATA SHEET

Corrosion Considerations:

RDP-VSL-00002A/B/C collect and transfer spent resin. These vessels receive both transport liquid and spent resin slurry streams. Normally the vessels operate at 100°F with a maximum fluid temperature of 113°F.

a General Corrosion
Hamner (1981) lists a corrosion rate for 304 (and 304L) in 2 M HNO_3 of less than 2 mpy. Davis (1994) states the corrosion rate for 304L in 12% HNO_3 will be less than about 1 mpy up to about 212°F.

In this system, the conditions are such that 304L stainless steel will be acceptable.

Conclusion:
Under normal conditions either 304L or 316L will be satisfactory.

b Pitting Corrosion
While chloride is known to cause pitting in acid and neutral solutions, with no chloride present in reportable concentrations, both 304L and 316L stainless steel are acceptable.

Conclusion:
The use of 304L or 316L is acceptable.

c End Grain Corrosion
End grain corrosion only occurs in metal with exposed end grains and in highly oxidizing acid conditions.

Conclusion:
Not expected in this system.

d Stress Corrosion Cracking
The exact amount of chloride required to cause stress corrosion cracking is unknown. In part this is because the amount varies with temperature, metal sensitization, and the environment. But it is also unknown because chloride tends to concentrate under heat transfer conditions, by evaporation, and electrochemically during a corrosion process. Hence, even as little as a few ppm can lead to cracking under some conditions. Generally, as seen in Sedriks (1996) and Davis (1987), chloride stress corrosion cracking does not usually occur below about 140°F. During the normal operations, either 304L or 316L is expected to be satisfactory.

Conclusion:
At the normal operating environment, either 304L or 316L is acceptable.

e Crevice Corrosion
Comments under Pitting are generally applicable here. However, the one additional factor is the presence of resin beads. These will form crevices at the wall could initiate crevice corrosion.

Conclusion:
The presence of resin increases the probability of initiating crevice corrosion. The more pitting resistant 316L is recommended

f Corrosion at Welds
Corrosion at welds is not considered a problem in the proposed environment.

Conclusion:
Weld corrosion is not considered a problem for this system.

g Microbiologically Induced Corrosion (MIC)
MIC is not considered a problem in this system.

Conclusion:
Not a concern.

h Fatigue/Corrosion Fatigue
Corrosion fatigue is not expected to be a concern. The pressures encountered are so low and the strength of the material is so comparatively high that corrosion fatigue is not a problem.

Conclusions
Not a concern.

PLANT ITEM MATERIAL SELECTION DATA SHEET

i Vapor Phase Corrosion
Not expected in this system.

Conclusion:
Not considered to be a concern.

j Erosion
Based on past experiments by Smith & Elmore (1992), the solids are soft and erosion is not expected to be a concern for the vessel wall. Based on 24590-WTP-RPT-M-04-0008, a general erosion allowance of 0.016 inch is adequate for components with maximum solids content up to 27.3 wt%. Additional 316L stainless steel should be provided as localized protection for the applicable portions of the bottom head to accommodate PJM discharge velocities of up to 12 m/s with normal maximum solids concentrations of 7.0 wt% and maximum solids concentrations of 53 wt% with a usage of 19 % operation as documented in 24590-WTP-M0C-50-00004. Vessels RDP-VSL-00002A/B/C require at least 0.060-inch additional protection. The 53 wt% is considered to be conservative. The fraction of time the solids concentration is expected to be at maximum is 10 %. During normal operation, 90 % of the time, the solids content of RDP-VSL-00002A/B/C is expected to be 7.0 wt%.

The wear of the PJM nozzles can occur from flow for both the discharge and reflood cycles of operation. At least 0.038–inch of additional 316L stainless steel should be provided on the inner surface of the PJM nozzle to accommodate wear due to PJM discharge and suction velocities with normal solids concentrations of 7.0 wt% and a maximum solids concentrations of 53 wt% with a usage of 19 % operation as documented in 24590-WTP-M0C-50-00004.

Conclusion:
The recommended corrosion allowance provides sufficient protection for erosion of the vessel wall. Additional localized protection for the bottom head will accommodate PJM discharge velocities and for the PJM nozzles will accommodate PJM discharge and reflood velocities.

k Galling of Moving Surfaces
Not applicable.

Conclusion:
Not applicable.

l Fretting/Wear
No contacting surfaces expected.

Conclusion:
Not applicable.

m Galvanic Corrosion
No dissimilar metals are present.

Conclusion:
Not applicable.

n Cavitation
None expected.

Conclusion:
Not believed to be of concern.

o Creep
The temperatures are too low to be a concern.

Conclusion:
Not applicable.

p Inadvertent Nitric Acid Addition
Vessels normally operate at low pH.

Conclusion:
Not applicable.

PLANT ITEM MATERIAL SELECTION DATA SHEET

References:

1. 24590-WTP-M0C-50-00004, *Wear Allowance for WTP Waste Slurry Systems*
2. 24590-WTP-RPT-M-04-0008, Rev. 2, *Evaluation Of Stainless Steel Wear Rates In WTP Waste Streams At Low Velocities*
3. 24590-WTP-RPT-PR-04-0001, Rev. B, *WTP Process Corrosion Data*
4. CCN 130177, Zapp, PE, 2000, *Material Corrosion and Plate-Out Test of Types 304L and 316L Stainless Steel*, WSRC-TR-2000-00434, Savannah River Site, Aiken, SC
5. Davis, JR (Ed), 1987, *Corrosion, Vol 13*, In "Metals Handbook", ASM International, Metals Park, OH 44073
6. Davis, JR (Ed), 1994, *Stainless Steels*, In ASM Metals Handbook, ASM International, Metals Park, OH 44073
7. Hamner, NE, 1981, *Corrosion Data Survey*, Metals Section, 5th Ed, NACE International, Houston, TX 77218
8. Sedriks, AJ, 1996, *Corrosion of Stainless Steels*, John Wiley & Sons, Inc., New York, NY 10158
9. Smith, H. D. and M. R. Elmore, 1992, Corrosion Studies of Carbon Steel under Impinging Jets of Simulated Slurries of Neutralized Current Acid Waste (NCAW) and Neutralized Cladding Removal Waste (NCRW), PNL-7816, Pacific Northwest Laboratory, Richland, Washington.

Bibliography:

1. CCN 130171, Ohl, PC to PG Johnson, Internal Memo, Westinghouse Hanford Co, *Technical Bases for Cl- and pH Limits for Liquid Waste Tank Cars*, MA: PCO:90/01, January 16, 1990.
2. CCN 130172, Dillon, CP (Nickel Development Institute), Personal Communication to J R Divine (ChemMet, Ltd., PC), 3 Feb 2000.
3. Agarwal, DC, *Nickel and Nickel Alloys*, In: Revie, WW, 2000. *Uhlig's Corrosion Handbook*, 2nd Edition, Wiley-Interscience, New York, NY 10158
4. Jones, RH (Ed.), 1992, *Stress-Corrosion Cracking*, ASM International, Metals Park, OH 44073
5. Koch, GH, 1995, *Localized Corrosion in Halides Other Than Chlorides*, MTI Pub No. 41, Materials Technology Institute of the Chemical Process Industries, Inc, St Louis, MO 63141
6. Uhlig, HH, 1948, *Corrosion Handbook*, John Wiley & Sons, New York, NY 10158
7. Van Delinder, LS (Ed), 1984, *Corrosion Basics*, NACE International, Houston, TX 77084

PLANT ITEM MATERIAL SELECTION DATA SHEET

24590-WTP-RPT-PR-04-0001, Rev. B
WTP Process Corrosion Data

PROCESS CORROSION DATA SHEET

Component(s) (Name/ID #) Spent resin slurry vessel (RDP-VSL-00002 A/B/C)
Spent resin dewatering moisture separation vessel (RDP-VSL-00004)

Facility PTF

In Black Cell? Yes (RDP-VSL-00002A/B/C only)

Chemicals	Unit[1]	Contract Maximum		Non-Routine (note 3)		Notes
		Leach	No leach	Leach	No Leach	
Aluminum	g/l					
Chloride	g/l					
Fluoride	g/l					
Iron	g/l					
Nitrate	g/l			4.65E-04	4.65E-04	
Nitrite	g/l					
Phosphate	g/l					
Sulfate	g/l					
Mercury	g/l					
Carbonate	g/l					
Undissolved solids	wt%					
Other (NaMnO4, Pb,...)	g/l					
Other	g/l					
pH	N/A					Note 3
Temperature	°F					Note 2

List of Organic Species:

References

System Description: 24590-PTF-3YD-RDP-00001, Rev 0
Mass Balance Document: 24590-WTP-M4C-V11T-00005, Rev A
Normal Input Stream #: CXP19, CXP18, RDP09
Off Normal Input Stream # (e.g., overflow from other vessels): Overflow from CRP-VSL-00002
P&ID: 24590-PTF-M6-RDP-P0001, Rev 0
PFD: 24590-PTF-M5-V17T-P0020, Rev 1
Technical Reports:

Notes:

1. Concentrations less than 1x 10^{-4} g/l do not need to be reported; list values to two significant digits max.
2. 100 °F to 113 °F (24590-PTF-MVC-RDP-00001, Rev 0)
3. pH approximately 1

Assumptions:

PLANT ITEM MATERIAL SELECTION DATA SHEET

4.10.1 Spent Resin Slurry Vessel (RDP-VSL-00002A/B/C)

Routine Operations

The spent resin slurry vessels (RDP-VSL-00002-A/B/C) are designed to collect and transfer a batch of spent resin every week. The system is capable of processing alternate batch types. After commissioning, the time between spent resin batch transfers and the type of transfer will be determined by operational experience. The spent resin slurry vessels (RDP-VSL-00002-A/B/C) are 12.0 ft in diameter and 19.8 ft in total height with a working volume of 7500 gal.

The spent resin slurry vessels (RDP-VSL-00002-A/B/C) receive both liquid and slurry streams.

These vessels, with associated piping and controls, serve as both the source of transport liquid and the receipt vessels for spent resin slurry. Each vessel is designed to contain one full batch of ion exchange resin plus the transport liquid associated with transferring the resin bed out of an IX column. The total working volume required for removing the spent resin from an IX column is 7500 gallons per vessel (6900 gallons of transport fluid and 600 gallons of resin). During normal operation, the vessels will contain approximately 8 % vol/vol solids. The solids content is greater during the first few minutes of displacement when the incoming slurry line could be very high in solids, but the high solids content is gradually diluted to 8 % vol/vol solids as the clear column sequence is completed and the full batch of transport fluid is transferred. Nozzles will be included as required for process feed streams, overflow lines, reagent addition, ventilation, and recycle return lines.

Non-Routine Operations that Could Affect Corrosion/Erosion

None identified.

PLANT ITEM MATERIAL SELECTION DATA SHEET

R10339149

RDP-VSL-00004 (PTF)

Spent Resin Dewatering Moisture Separation Vessel

- Design Temperature (°F)(max/min): 300/-10
- Design Pressure (psig) (max/min): 15/FV
- Location: out cell

ISSUED BY
RPP-WTP PDC
INIT 1/20/04 DATE

Contents of this document are Dangerous Waste Permit affecting

Operating conditions are as stated on sheets 5 and 6

Materials Considered:

Material (UNS No.)	Relative Cost	Acceptable Material	Unacceptable Material
Carbon Steel	0.23		X
304L (S30403)	1.00	X	
316L (S31603)	1.18	X	
6% Mo (N08367/N08926)	7.64	X	
Alloy 22 (N06022)	11.4	X	
Ti-2 (R50400)	10.1	X	

Recommended Material: 304 (max 0.030% C; dual certified)

Recommended Corrosion Allowance: 0.04 inch (includes 0.00 inch general erosion allowance)

Process & Operations Limitations:

- None

STEVEN WAKEMAN VAIL
STATE OF WASHINGTON
39250
REGISTERED
PROFESSIONAL ENGINEER
EXPIRES: 12/07/05
7/20/04

Please note that source, special nuclear and byproduct materials, as defined in the Atomic Energy Act of 1954 (AEA), are regulated at the U.S. Department of Energy (DOE) facilities exclusively by DOE acting pursuant to its AEA authority. DOE asserts, that pursuant to the AEA, it has sole and exclusive responsibility and authority to regulate source, special nuclear, and byproduct materials at DOE-owned nuclear facilities. Information contained herein on radionuclides is provided for process description purposes only.

This bound document contains a total of 6 sheets.

REV	DATE	REASON FOR REVISION	PREPARER	CHECKER	APPROVER
0	7/14/04	Issued for Permitting Use			GP Ranquis

PLANT ITEM MATERIAL SELECTION DATA SHEET

Corrosion Considerations:

Warm air is circulated by a blower to pick up moisture from the spent resin and is cooled and condensed in RDP-VSL-00004.

a General Corrosion
Hamner (1981) lists a corrosion rate for 304 (and 304L) in 2 M HNO_3 of less than 2 mpy. Davis (1994) states the corrosion rate for 304L in 12% HNO_3 will be less than about 1 mpy up to about 212°F.

In this system, the conditions are such that 304L stainless steel will be acceptable.

Conclusion:
Under normal conditions either 304L or 316L will be satisfactory.

b Pitting Corrosion
While chloride is known to cause pitting in acid and neutral solutions, with no chloride present in reportable concentrations, both 304L and 316L stainless steel are acceptable.

Conclusion:
The use of 304L or 316L is acceptable.

c End Grain Corrosion
End grain corrosion only occurs in metal with exposed end grains and in highly oxidizing acid conditions.

Conclusion:
Not expected in this system.

d Stress Corrosion Cracking
The exact amount of chloride required to cause stress corrosion cracking is unknown. In part this is because the amount varies with temperature, metal sensitization, and the environment. But it is also unknown because chloride tends to concentrate under heat transfer conditions, by evaporation, and electrochemically during a corrosion process. Hence, even as little as a few ppm can lead to cracking under some conditions. Generally, as seen in Sedriks (1996) and Davis (1987), chloride stress corrosion cracking does not usually occur below about 140°F. During the normal operations, either 304L or 316L is expected to be satisfactory.

Conclusion:
At the normal operating environment, either 304L or 316L is acceptable.

e Crevice Corrosion
Comments under Pitting are generally applicable here.

Conclusion:
See Pitting.

f Corrosion at Welds
Corrosion at welds is not considered a problem in the proposed environment.

Conclusion:
Weld corrosion is not considered a problem for this system.

g Microbiologically Induced Corrosion (MIC)
MIC is not considered a problem in this system.

Conclusion:
Not a concern.

h Fatigue/Corrosion Fatigue
Corrosion fatigue is not expected to be a concern. The pressures encountered are so low and the strength of the material is so comparatively high that corrosion fatigue is not a problem.

Conclusions
Not a concern.

i Vapor Phase Corrosion
Not expected in this system.

Conclusion:
Not considered to be a concern.

PLANT ITEM MATERIAL SELECTION DATA SHEET

j Erosion
Velocities in the vessel are expected to be low and the undissolved solids content is low.

Conclusion:
Erosion is not expected to be a concern.

k Galling of Moving Surfaces
Not applicable.

Conclusion:
Not applicable.

l Fretting/Wear
No contacting surfaces expected.

Conclusion:
Not applicable.

m Galvanic Corrosion
No dissimilar metals are present.

Conclusion:
Not applicable.

n Cavitation
None expected.

Conclusion:
Not believed to be of concern.

o Creep
The temperatures are too low to be a concern.

Conclusion:
Not applicable.

p Inadvertent Nitric Acid Addition
Vessel normally operates at low pH.

Conclusion:
Not applicable.

PLANT ITEM MATERIAL SELECTION DATA SHEET

References:

1. Davis, JR (Ed), 1987, *Corrosion, Vol 13*, In "Metals Handbook", ASM International, Metals Park, OH 44073
2. Davis, JR (Ed), 1994, *Stainless Steels*, In ASM Metals Handbook, ASM International, Metals Park, OH 44073
3. Hamner, NE, 1981, *Corrosion Data Survey*, Metals Section, 5th Ed, NACE International, Houston, TX 77218
4. Sedriks, AJ, 1996, *Corrosion of Stainless Steels*, John Wiley & Sons, Inc., New York, NY 10158
5. Smith, H. D. and M. R. Elmore, 1992, *Corrosion Studies of Carbon Steel under Impinging Jets of Simulated Slurries of Neutralized Current Acid Waste (NCAW) and Neutralized Cladding Removal Waste (NCRW)*, PNL-7816, Pacific Northwest Laboratory, Richland, Washington.
6. Zapp, PE, 2000, *Material Corrosion and Plate-Out Test of Types 304L and 316L Stainless Steel*, WSRC-TR-2000-00434, Savannah River Site, Aiken, SC

Bibliography:

1. Agarwal, DC, *Nickel and Nickel alloys*, In: Revie, WW, 2000. *Uhlig's Corrosion Handbook*, 2nd Edition, Wiley-Interscience, New York, NY 10158
2. Dillon, CP (Nickel Development Institute), Personal Communication to J R Divine (ChemMet, Ltd., PC), 3 Feb 2000.
3. Jones, RH (Ed.), 1992, *Stress-Corrosion Cracking*, ASM International, Metals Park, OH 44073
4. Koch, GH, 1995, *Localized Corrosion in Halides Other Than Chlorides*, MTI Pub No. 41, Materials Technology Institute of the Chemical Process Industries, Inc, St Louis, MO 63141
5. Uhlig, HH, 1948, *Corrosion Handbook*, John Wiley & Sons, New York, NY 10158
6. Van Delinder, LS (Ed), 1984, *Corrosion Basics*, NACE International, Houston, TX 77084

PLANT ITEM MATERIAL SELECTION DATA SHEET

OPERATING CONDITIONS

PROCESS CORROSION DATA SHEET

Component(s) (Name/ID #) Spent resin dewatering moisture separation vessel (RDP-VSL-00004)

Facility PTF

In Black Cell? No

Chemicals	Unit[1]	Contract Maximum		Non-Routine (note 3)		Notes
		Leach	No leach	Leach	No Leach	
Aluminum	g/l					
Chloride	g/l					
Fluoride	g/l					
Iron	g/l					
Nitrate	g/l			4.65E-04	4.65E-04	
Nitrite	g/l					
Phosphate	g/l					
Sulfate	g/l					
Mercury	g/l					
Carbonate	g/l					
Undissolved solids	wt%					
Other (NaMnO4, Pb,...)	g/l					
Other	g/l					
pH	N/A					Note 3
Temperature	°F					Note 2

List of Organic Species:

Notes:

1. Concentrations less than 1x 10^{-4} g/l do not need to be reported; list values to two significant digits max.
2. 100 °F to 113 °F
3. pH approximately 1

Assumptions:

4.10.2 Spent Resin Dewatering Moisture Separation Vessel (RDP-VSL-00004)

Routine Operations

The vendor dewatering package will be able to handle a maximum bed size of 600 gallons. A vendor dewatering package is provided to reduce the water content of the spent resin to below transportation and disposal limits within the specified processing time.

The vendor package (vendor package number MWD-00005) includes the disposable dewatering container, spent resin dewatering container pump (RDP-PMP-00011), spent resin dewatering blower (RDP-BLWR-00001), and spent resin dewatering moisture separation vessel (RDP-VSL-00004).

Non-Routine Operations that Could Affect Corrosion/Erosion

None identified.

PLANT ITEM MATERIAL SELECTION DATA SHEET

R10667003

ISSUED BY
RPP-WTP PDC

RLD-VSL-00017-A/B (PTF)
Alkaline Effluent Vessels

- Design Temperature (°F)(max/min): 180/40
- Design Pressure (psig) (max/min): 15/FV
- Location: out cell

Contents of this document are Dangerous Waste Permit affecting

Operating conditions are as stated on attached Process Corrosion Data Sheet

Operating Modes Considered:

- Normal operating conditions

Materials Considered:

Material (UNS No.)	Relative Cost	Acceptable Material	Unacceptable Material
Carbon Steel	0.23		X
304L (S30403)	1.00	X	
316L (S31603)	1.18	X	
6% Mo (N08367/N08926)	7.64	X	
Alloy 22 (N06022)	11.4	X	
Ti-2 (R50400)	10.1		X

Recommended Material: 304 (max 0.030% C; dual certified)

Recommended Corrosion Allowance: 0.08 inch (includes 0.024 inch corrosion allowance and 0.004 inch erosion allowance)

Process & Operations Limitations:

- Develop rinsing/flushing procedure for acid or water.

STEVEN WAKEMAN VAIL
STATE OF WASHINGTON
39250
REGISTERED PROFESSIONAL ENGINEER
3/8/06
EXPIRES: 12/07/07

Please note that source, special nuclear and byproduct materials, as defined in the Atomic Energy Act of 1954 (AEA), are regulated at the U.S. Department of Energy (DOE) facilities exclusively by DOE acting pursuant to its AEA authority. DOE asserts, that pursuant to the AEA, it has sole and exclusive responsibility and authority to regulate source, special nuclear, and byproduct materials at DOE-owned nuclear facilities. Information contained herein on radionuclides is provided for process description purposes only.

This bound document contains a total of 7 sheets.

REV	DATE	REASON FOR REVISION	PREPARER	CHECKER	APPROVER
2	3/8/06	Issued for Permitting Use			
1	1/25/05	Issued for Permitting Use	DLA	JRD	SWV
0	2/17/04	Issued for Permitting Use	DLA	JRD	APR

PLANT ITEM MATERIAL SELECTION DATA SHEET

Corrosion Considerations:

These vessels will normally receive caustic effluent from LVP-VSL-00001, spent reagents from CRP-VSL-00001 and potentially active material from PWD-VSL-00046.

a General Corrosion
Hamner's data (1981) shows a corrosion rate for 304 (and 304L) in NaOH of less than 20 mpy (500 μm/y) at 77°F and over 20 mpy at 122°F. He shows 316 (and 316L) has a rate of less than 2 mpy up to 122°F and 50% NaOH. Dillon (2000) and Sedriks (1996) both state that the 300 series alloys are acceptable in up to 50% NaOH at temperatures up to about 122°F or slightly above. Divine's work (1986) with simulated-radwaste evaporators, six months at 140°F, showed 304L was slightly more resistant to corrosion (<0.2 mpy) than was 316L (<0.6 mpy); Ni 200, pure nickel, was much less resistant (≈7 mpy) probably due to the complexants. Zapp (1998) notes that the Savannah River evaporator vessels, operating at about 300°F, are made of 304L and have suffered no failures in about 30 years; 304L heat transfer surfaces have failed however after about 10 years.

Davis (1994) states the corrosion rate for 304L in pure NaOH will be less than about 0.1 mpy up to about 212°F though Sedriks (1996) states the data beyond about 122°F are incorrect. Danielson and Pitman (2000), based on short term studies, suggest a corrosion rate of about 0.5 mpy for 316L in simulated waste at boiling, >212°F.

Ohl and Carlos (1994), in their review of the 242-A Evaporator, found in waste similar to that expected in LAW, the corrosion of 304L after about two years of operation at 140°F was less than the accepted variability of the plate. Because of uncertainties in the starting thickness of the metal, a review of the raw data was inconclusive.

Uhlig (1948) has shown that pure nickel is resistant to corrosion by NaOH. However, as Divine (1986) pointed out, the presence of complexing agents may reverse the trend. Agarwal (2000) states that the higher nickel alloys, such as C-22, are highly corrosion resistant though specific mention of alkaline media is not made. The general literature mainly discusses cracking problems (see below) rather than uniform corrosion.

In these vessels, the hydroxide concentration will be significantly lower as is the temperature; thus, the corrosion rates will be smaller.

Conclusion:
At temperatures less than about 140°F, 304L or 316L are expected to be sufficiently resistant to the waste solution with a probable general corrosion rate of less than 1 mpy. Based on the Savannah River experience with Hanford-like waste at higher temperatures, 304L is expected to be satisfactory to 180°F. Rinsing procedure should be developed to minimize effects of acid in the presence of fluoride. A 0.08 inch corrosion allowance is recommended to compensate for the possibility of high fluoride concentrations in acid conditions.

b Pitting Corrosion
Chloride is known to cause pitting in acid and neutral solutions. Dillon (2000) is of the opinion that in alkaline solutions, pH>12, chlorides are likely to promote pitting only in tight crevices. Dillon and Koch (1995) are of the opinion that fluoride will have little effect. Jenkins (1998) has stated that localized corrosion can occur under the deposits on tubes, probably due to the chlorides. Further, Revie (2000) and Uhlig (1948) note that nitrates inhibit chloride pitting. Wilding and Paige (1976) note that nitric acid inhibits chloride attack though their data are at higher temperatures and concentrations.

Conclusion:
Localized corrosion, such as pitting, is not expected to be a concern at the normal operating conditions. 304L is satisfactory.

c End Grain Corrosion
End grain corrosion only occurs in metal with exposed end grains and in highly oxidizing acid conditions.

Conclusion: Not applicable to this system.

d Stress Corrosion Cracking
The exact amount of chloride required to cause stress corrosion cracking is unknown. In part this is because the amount varies with temperature, metal sensitization, and the environment. But it is also unknown because chloride tends to concentrate under heat transfer conditions, by evaporation, and electrochemically during a corrosion process. Hence, even as little as 10 ppm can lead to cracking under some conditions. Generally, as seen in Sedriks (1996) and Davis (1987), stress corrosion cracking does not usually occur below about 140°F. The "L" grades are also more resistant to cracking than the higher carbon versions. If the concentrations are as stated, stress corrosion cracking will be minimized.

Conclusion:
Because of the normal operating environment 304L stainless steel is expected to be acceptable even to 180 °F.

e Crevice Corrosion
For the most part, the pitting discussion covers this area.

Conclusion:
See Pitting

PLANT ITEM MATERIAL SELECTION DATA SHEET

f Corrosion at Welds
Corrosion at welds is not considered a problem in the proposed environment.

Conclusion:
Weld corrosion is not considered a problem for this system.

g Microbiologically Induced Corrosion (MIC)
The proposed operating temperatures are slightly high for microbial growth. Additionally, the location of the system in the process suggests little chance of the introduction of microbes.

Conclusion:
MIC is not expected to be a problem.

h Fatigue/Corrosion Fatigue
Corrosion fatigue is not expected to be a problem in this vessel.

Conclusions
Not considered to be a problem.

i Vapor Phase Corrosion
The vapor phase portion of the vessel will be spattered with solution and pitting or crevice corrosion may be a concern. A rinsing procedure should be developed to minimize the formation of deposits.

Conclusion:
Provided deposits are not allowed to remain, vapor phase corrosion is not a concern.

j Erosion
Velocities are expected to be low. Erosion allowance of 0.004 inch for components with low solids content (< 2 wt%) at low velocities is based on 24590-WTP-RPT-M-04-0008.

Conclusion:
Not expected to be a concern.

k Galling of Moving Surfaces
Not applicable.

Conclusion:
Not applicable.

l Fretting/Wear
Not expected to be applicable.

Conclusion:
Not a concern.

m Galvanic Corrosion
For the environment and the proposed alloys, there is not believed to be a concern.

Conclusion:
Not a concern.

n Cavitation
None expected.

Conclusion:
Not believed to be of concern.

o Creep
The temperatures are too low to be a concern.

Conclusion:
Not applicable.

PLANT ITEM MATERIAL SELECTION DATA SHEET

p Inadvertent Nitric Acid Addition

Higher chloride contents and higher temperatures usually require higher alloy materials. Nitrate ions inhibit the pitting and crevice corrosion of stainless alloys. Furthermore, nitric acid passivates these alloys; therefore, lower pH values brought about by increases in the nitric acid content of process fluid will not cause higher corrosion rates for these alloys. The upset condition that was most likely to occur is lowering of the pH of the vessel content by inadvertent addition of 0.5 M nitric acid. Lowering of pH may make a chloride-containing solution more likely to cause pitting of stainless alloys. Increasing the nitric acid content of the process fluid adds more of the pitting-inhibiting nitrate ion to the process fluid. In addition, adding the nitric acid solution to the stream will dilute the chloride content of the process fluid.

Conclusion:

The recommended materials will be able to withstand a plausible inadvertent addition of 0.5 M nitric acid for a limited period.

PLANT ITEM MATERIAL SELECTION DATA SHEET

References:

1. 24590-WTP-RPT-M-04-0008, Rev. 2, *Evaluation Of Stainless Steel Wear Rates In WTP Waste Streams At Low Velocities*
2. 24590-WTP-RPT-PR-04-0001, Rev. B, *WTP Process Corrosion Data*
3. CCN 130172, Divine, JR, 1986, Letter to A.J. Diliberto, *Reports of Experimentation*, Battelle, Pacific Northwest Laboratories, Richland, WA 99352
4. CCN 130173, Dillon, CP (Nickel Development Institute), Personal Communication to J R Divine (ChemMet, Ltd., PC), 3 Feb 2000.
5. Agarwal, DC, *Nickel and Nickel Alloys*, In: Revie, WW, 2000. *Uhlig's Corrosion Handbook*, 2nd Edition, Wiley-Interscience, New York, NY 10158
6. Danielson, MJ & SG Pitman, 2000, *Corrosion Tests of 316L and Hastelloy C-22 in Simulated Tank Waste Solutions*, PNWD-3015 (BNFL-RPT-019, Rev 0), Pacific Northwest Laboratory, Richland WA.
7. Davis, JR (Ed), 1987, *Corrosion, Vol 13*, In "Metals Handbook", ASM International, Metals Park, OH 44073
8. Davis, JR (Ed), 1994, *Stainless Steels*, In ASM Metals Handbook, ASM International, Metals Park, OH 44073
9. Hamner, NE, 1981, *Corrosion Data Survey*, Metals Section, 5th Ed, NACE International, Houston, TX
10. Jenkins, CF, 1998, *Performance of Evaporators in High Level Radioactive Chemical Waste Service*, Presented at Corrosion 98, NACE International, Houston TX 77084
11. Koch, GH, 1995, *Localized Corrosion in Halides Other Than Chlorides*, MTI Pub No. 41, Materials Technology Institute of the Chemical Process Industries, Inc, St Louis, MO 63141
12. Ohl, PC & WC Carlos, 1994, *Hanford High-Level Evaporator/Crystallizer Corrosion Evaluation*, WHC-SA-1983-FP, Westinghouse Hanford Co., Richland, WA 99352
13. Revie, WW, 2000. *Uhlig's Corrosion Handbook*, 2nd Edition, Wiley-Interscience, New York, NY 10158
14. Sedriks, AJ, 1996, *Corrosion of Stainless Steels*, John Wiley & Sons, Inc., New York, NY 10158
15. Uhlig, HH, 1948, *Corrosion Handbook*, John Wiley & Sons, New York, NY 10158
16. Wilding, MW & BE Paige, 1976, *Survey on Corrosion of Metals and Alloys in Solutions Containing Nitric Acid*, ICP-1107, Idaho National Engineering Laboratory, Idaho Falls, ID.
17. Zapp, PE, 1998, *Preliminary Assessment of Evaporator Materials of Construction*, BNF—003-98-0029, Rev 0, Westinghouse Savannah River Co., Inc for BNFL Inc.

Bibliography:

1. CCN 130170, Blackburn, LD to PG Johnson, Internal Memo, Westinghouse Hanford Co, *Evaluation of 240-AR Chloride Limit*, August 15, 1991.
2. CCN 130171, Ohl, PC to PG Johnson, Internal Memo, Westinghouse Hanford Co, *Technical Bases for Cl- and pH Limits for Liquid Waste Tank Cars*, MA: PCO:90/01, January 16, 1990.
3. Jones, RH (Ed.), 1992, *Stress-Corrosion Cracking*, ASM International, Metals Park, OH 44073
4. Phull, BS, WL Mathay, & RW Ross, 2000, *Corrosion Resistance of Duplex and 4-6% Mo-Containing Stainless Steels i FGD Scrubber Absorber Slurry Environments*, Presented at Corrosion 2000, Orlando, FL, March 26-31, 2000, NACE International, Houston TX 77218.
5. Van Delinder, LS (Ed), 1984, *Corrosion Basics*, NACE International, Houston, TX 77084

PLANT ITEM MATERIAL SELECTION DATA SHEET

24590-WTP-RPT-PR-04-0001, Rev. B
WTP Process Corrosion Data

PROCESS CORROSION DATA SHEET

Component(s) (Name/ID #) Alkaline effluent vessel (RLD-VSL-00017A/B)

Facility PTF

In Black Cell? No

Chemicals	Unit[1]	Contract Maximum		Non-Routine		Notes
		Leach	No leach	Leach	No Leach	
Aluminum	g/l					
Chloride	g/l	8.16E-01	1.78E+00			
Fluoride	g/l	2.09E+00	4.55E+00			
Iron	g/l					
Nitrate	g/l	3.62E+00	7.88E+00			
Nitrite	g/l					
Phosphate	g/l					
Sulfate	g/l					
Mercury	g/l					
Carbonate	g/l					
Undissolved solids	wt%					
Other (NaMnO4, Pb,...)	g/l					
Other	g/l					
pH	N/A					Note 3
Temperature	°F					Note 2

List of Organic Species:

References

System Description: 24590-PTF-3YD-RDP-00001, Rev 0
Mass Balance Document: 24590-WTP-M4C-V11T-00005, Rev A
Normal Input Stream #: LVP21, RLD09
Off Normal Input Stream # (e.g., overflow from other vessels): See section 4.11.2, Non-routine Operations
P&ID: 24590-PTF-M6-RLD-P0003, Rev 0
PFD: 24590-PTF-M5-V17T-P0022004, Rev 0
Technical Reports:

Notes:

1. Concentrations less than 1x 10^{-4} g/l do not need to be reported; list values to two significant digits max.
2. T normal operation 59 °F to 125 °F, nominal 111 °F (24590-PTF-MVC-RLD-00004, Rev 0); could receive caustic scrubber purge non routinely at 125 °F
3. pH approximately 13 to 15

Assumptions:

PLANT ITEM MATERIAL SELECTION DATA SHEET

4.11.2 Alkaline Effluent Vessel (RLD-VSL-00017 A/B)

Routine Operations

During normal operations, RLD-VSL-00017A will receive the following feeds:

- Caustic effluent from caustic collection vessel LVP-VSL-00001
- Caustic effluent from a future caustic collection vessel
- Spent reagents from CRP-VSL-00001
- Potentially active material from the C3 drain vessel PWD-VSL-00046

Non-Routine Operations that Could Affect Corrosion/Erosion

During non-routine operations, RLD-VSL-00017A/B will receive the following feeds:

- Process condensate area sump RLD-SUMP-00003
- PWD-VSL-00045 contents that do not meet BOF transfer criteria
- Overflow from reagent vessels (from floor berms of SHR-TK-00009, DIW-TK-00001/SHR-TK-00001, and NAR-TK-00007)
- Potentially active material from non-radioactive liquid effluent tank in BOF (NLD-TK-00001)

PLANT ITEM MATERIAL SELECTION DATA SHEET

R10664390

TCP-VSL-00001 (PTF)
Treated LAW Concentrate Storage Vessel

- Design Temperature (°F)(max/min): 237/40
- Design Pressure (psig) (max/min): 15/-8
- Location: incell
- PJM Discharge Velocity (fps): 40
- Drive Cycle: 17 % (at 40 fps)

Offspring items--
TCP-PJM-00001 – TCP-PJM-00008

ISSUED BY
RPP-WTP PDC

Contents of this document are Dangerous Waste Permit affecting

Operating conditions are as stated on sheets 6 and 7

Operating Modes Considered:
- Normal operating conditions

Materials Considered:

Material (UNS No.)	Relative Cost	Acceptable Material	Unacceptable Material
Carbon Steel	0.23		X
304L (S30403)	1.00		X
316L (S31603)	1.18	X	
6% Mo (N08367/N08926)	7.64	X	
Alloy 22 (N06022)	11.4	X	
Ti-2 (R50400)	10.1		X

Recommended Material: 316 (max 0.030% C; dual certified),

Recommended Corrosion Allowance: 0.040 inch (includes 0.024 inch corrosion allowance and 0.016 inch general erosion allowance; additional localized protection is required as discussed in section j)

Process & Operations Limitations:
- Develop flushing/rinsing procedure for acid and water

STEVEN WAKEMAN VAIL
STATE OF WASHINGTON
39250
REGISTERED
PROFESSIONAL ENGINEER
EXPIRES: 12/07/07

1/30/06

Please note that source, special nuclear and byproduct materials, as defined in the Atomic Energy Act of 1954 (AEA), are regulated at the U.S. Department of Energy (DOE) facilities exclusively by DOE acting pursuant to its AEA authority. DOE asserts, that pursuant to the AEA, it has sole and exclusive responsibility and authority to regulate source, special nuclear, and byproduct materials at DOE-owned nuclear facilities. Information contained herein on radionuclides is provided for process description purposes only.

This bound document contains a total of 7 sheets.

REV	DATE	REASON FOR REVISION	PREPARER	CHECKER	APPROVER
2	1/30/06	Issued for Permitting Use		HMK	
1	1/13/05	Issued for Permitting Use	DLA	APR	MWH
0	9/25/03	Issued for Permitting Use	DLA	JRD	APR

PLANT ITEM MATERIAL SELECTION DATA SHEET

Corrosion Considerations:

This vessel receives a continuous feed from the treated LAW evaporator separator vessel. LAW concentrate is normally received at 122°F. Vessel is equipped with a steam injection system to maintain fluid temperature above the freezing point (77 to 100°F). TCP-VSL-00001 may also receive treated LAW from CXP-VSL-00026A/B/C or treated solids from UFP-VSL-00002A/B. This is expected to be an infrequent occurrence.

a General Corrosion
Based on Hamner's data (1981), 304 (and 304L) has a corrosion rate of less than 20 mpy (500 μm/y) in NaOH at 77°F and over 20 mpy at 122°F. He shows 316 (and 316L) has a rate of less than 2 mpy in 50% NaOH at up to 122°F. Dillon (2000) and Sedriks (1996) both state that the 300 series are acceptable in up to 50% NaOH at temperatures up to about 122°F. Davis (1994) is more precise and states the corrosion rate for 304L in NaOH will be less than about 0.1 mpy; Danielson & Pitman (2000), based on short term studies, suggest a corrosion rate of about 0.5 mpy for 316L in simulated LAW. These two references therefore corroborate Dillon and Sedriks. In addition, Divine (1992) showed that 304L corroded less than 316L in simulated complexant waste with fluorides and chlorides at 140°F. The corrosion rate of 304L after six months of testing was less than 0.2 mpy.

Ohl & Carlos (1994), in their review of the 242-A Evaporator, found that in waste similar to that expected in WTP, including the presence of radiation, the corrosion, of 304L after about 2 years of operation was less than the accepted variability of the plate. The NDE data are sufficiently uncertain to prevent definite conclusions from being drawn. However, a review by Zapp (1998) of the Savannah River evaporators showed the 304L shell had not been replaced after over 30 years of operation despite failure of the 304L evaporator tubes (which operate at higher temperature than the shell).

Conclusion:
At stated temperatures, 304L and 316L are expected to be sufficiently resistant to the waste solution with a probable general corrosion rate of less than 1 mpy.

b Pitting Corrosion
Chloride is well known for causing pitting in acid and neutral solutions. Dillon (2000) is of the opinion that in alkaline solutions, pH>12, chlorides are likely to promote pitting only in tight crevices. It is his opinion that 304L would probably be acceptable, but the use of 316L and especially a 6% Mo alloy would provide a benefit because of their better resistance to pitting by chlorides. Davis (1994) recommends the use of 316L over 304L. Dillon and Koch (1995) are of the opinion that fluoride will have little effect. In addition, Divine's work (1992) showed no hint of pitting after six months at 140°F under boiling heat transfer conditions. Revie (2000) notes that nitrate inhibits chloride corrosion. Therefore, the high nitrate concentrations in the waste are expected to be beneficial.

The apparent lack of pitting in the 242-A Evaporator suggests 304L is acceptable for the vessel. Based on Divine's work (1992), which was conducted in boiling waste at a bulk temperature of 140°F, 304L should be acceptable.

The vessel is equipped with wash rings capable of supplying water or acid. There is a possibility of neutral to acid conditions with halides present. Therefore, 316L is better than 304L.

Conclusion:
316L is recommended.

c End Grain Corrosion
End grain corrosion only occurs in metal with exposed end grains and in highly oxidizing acid conditions. This system is alkaline except possibly during cleaning. The temperature during cleaning must not be above 122°F.

Conclusion:
Not applicable to this system.

d Stress Corrosion Cracking
Several sources of cracking are present in this system: chloride and sodium hydroxide, both of which cause stress corrosion cracking of stainless steel.

The exact amount of chloride required to stress corrosion crack stainless steel is unknown. In part this is because the amount varies with temperature, metal sensitization, and the environment and also because chloride tends to concentrate under heat transfer conditions, by evaporation, and electrochemically during a corrosion process. Hence, even as little as

PLANT ITEM MATERIAL SELECTION DATA SHEET

10 ppm can lead to cracking under some conditions. Generally, as seen in Sedriks (1996) and Davis (1987), stress corrosion cracking does not usually occur below about 140°F. Further, the use of "L" grade stainless reduces the opportunity for sensitization. From the above references, it also observed that alkaline conditions reduce the probability of the initiation of stress corrosion cracking to essentially zero. However, should a pit or crevice, including a deposit, be present under which the environment can become acid, then the alkaline environment will no longer have an effect.

Caustic cracking, according to Jones (1992), is not expected to occur below about 140°F for stainless steel. Zapp (1998) suggests cracking in waste is not a concern below about 280°F.

Conclusion:
316L is recommended to offer greater protection against pitting and therefore reduce the likelihood of cracking.

e Crevice Corrosion
Essentially the same comments and conclusions obtained for pitting are valid here.

Conclusion:
Same as for pitting.

f Corrosion at Welds
Corrosion at welds is not considered a problem in the proposed environment.

Conclusion:
Corrosion at welds in the vessel is not a concern.

g Microbiologically Induced Corrosion (MIC)
MIC typically is not prevalent in high pH solutions. Borenstein (1988) states most microbes prefer a pH below 7 though some have been grown at above 9.5. Further, microbial growth is normally not a concern in tanks.

Conclusion:
MIC is not expected to be a concern in the vessels.

h Fatigue/Corrosion Fatigue
Corrosion fatigue does not appear to be a concern.

Conclusions:
Not a concern.

i Vapor Phase Corrosion
Because of the highly alkaline conditions, no free HF or HCl is expected to be present in the vapor phase and no uniform/general corrosion is expected. A rinsing procedure should be developed to prevent formation of deposits. The nitrate and hydroxide in the waste are also present in any deposits and should minimize pitting.

Conclusion:
General corrosion will not be a concern. Use of 316 is recommended as more pitting-resistant.

j Erosion
Based on past experiments by Smith & Elmore (1992), the solids are soft and erosion is not expected to be a concern for the vessel wall. Based on 24590-WTP-RPT-M-04-0008, a general erosion allowance of 0.016 inch is adequate for components with maximum solids content up to 27.3 wt%. Additional 316L stainless steel should be provided as localized protection for the applicable portions of the bottom head to accommodate PJM discharge velocities of up to 12 m/s with normal maximum solids concentrations of 3.4 wt% and maximum solids concentrations of 20 wt% with a usage of 77 % operation as documented in 24590-WTP-M0C-50-00004. TCP-VSL-00001 requires at least 0.164-inch additional protection. The 20 wt% is considered to be conservative. The fraction of time the solids concentration is expected to be at maximum is 10 %. During normal operation, 90 % of the time, the solids content of TCP-VSL-00001 is expected to be 3.4 wt%.

PLANT ITEM MATERIAL SELECTION DATA SHEET

The wear of the PJM nozzles can occur from flow for both the discharge and reflood cycles of operation. At least 0.113–inch of additional 316L stainless steel should be provided on the inner surface of the PJM nozzle to accommodate wear due to PJM discharge and suction velocities with normal solids concentrations of 3.4 wt% and a maximum solids concentration of 20 wt% with a usage of 77 % operation as documented in 24590-WTP-M0C-50-00004.

Conclusion:
The recommended corrosion allowance provides sufficient protection for erosion of the vessel wall. Additional localized protection for the bottom head will accommodate PJM discharge velocities and for the PJM nozzles will accommodate PJM discharge and reflood velocities.

k Galling of Moving Surfaces
There are no moving surfaces within the vessels.

Conclusion:
Galling is of no concern in these vessels.

l Fretting/Wear
There are no contacting surfaces that are part of the vessel.

Conclusion:
Fretting and wear are not of concern.

m Galvanic Corrosion
The vessel contains no dissimilar metals.

Conclusion:
Galvanic corrosion is not a concern.

n Cavitation
None expected.

Conclusion:
Cavitation is not a concern.

o Creep
Creep is a high temperature phenomenon, occurring at greater than about 932°F.

Conclusion:
Creep is of negligible concern.

p Inadvertent Nitric Acid Addition
Higher chloride contents and higher temperatures usually require higher alloy materials. Nitrate ions inhibit the pitting and crevice corrosion of stainless alloys. Furthermore, nitric acid passivates these alloys; therefore, lower pH values brought about by increases in the nitric acid content of process fluid will not cause higher corrosion rates for these alloys. The upset condition that was most likely to occur is lowering of the pH of the vessel content by inadvertent addition of 0.5 M nitric acid. Lowering of pH may make a chloride-containing solution more likely to cause pitting of stainless alloys. Increasing the nitric acid content of the process fluid adds more of the pitting-inhibiting nitrate ion to the process fluid. In addition, adding the nitric acid solution to the stream will dilute the chloride content of the process fluid.

Conclusion:
The recommended materials will be able to withstand a plausible inadvertent addition of 0.5 M nitric acid for a limited period.

PLANT ITEM MATERIAL SELECTION DATA SHEET

References:

1. 24590-WTP-M0C-50-00004, Rev. D, *Wear Allowance for WTP Waste Slurry Systems*
2. 24590-WTP-RPT-M-04-0008, Rev. 2, *Evaluation Of Stainless Steel Wear Rates In WTP Waste Streams At Low Velocities*
3. 24590-WTP-RPT-PR-04-0001, Rev. B, *WTP Process Corrosion Data*
4. CCN 130172, Divine, JR, 1986, Letter to A.J. Diliberto, Reports of Experimentation, Battelle, Pacific Northwest Laboratories, Richland, WA 99352
5. CCN 130174, Divine, J. R. and W. C. Carlos, 1992, *Assessment of Known Degradation and Existing Corrosion Studies on Steel*, Presented at the High-Level Waste Tank Systems Structural Integrity Workshop, February 19-20, 1992, Richland, Washington
6. Borenstein, SW, 1988. *Microbiologically Influenced Corrosion Of Austenitic Stainless Steel*, Chang, J. Y., 1998, Corrosion Monitoring and Control for Tanks 8D-1 & 8D-2, Report of the Fourth Annual Corrosion Meeting, West Valley, New York.
7. Danielson, MJ & SG Pitman, 2000, Corrosion Tests of 316L and Hastelloy C-22 in Simulated Tank Waste Solutions, PNWD-3015 (BNFL-RPT-019, Rev 0), Pacific Northwest Laboratory, Richland WA.
8. Davis, JR (Ed), 1987, *Corrosion, Vol 13*, In "Metals Handbook", ASM International, Metals Park, OH 44073
9. Davis, JR, 1994, Stainless Steels, In ASM Metals Handbook, ASM International, Metals Park, OH 44073
10. Hamner, NE, 1981, Corrosion Data Survey, Metals Section, 5th Ed, NACE International, Houston, TX
11. Jones, RH (Ed.), 1992, Stress-Corrosion Cracking, ASM International, Metals Park, OH 44073
12. Koch, GH, 1995, Localized Corrosion in Halides Other Than Chlorides, MTI Pub No. 41, Materials Technology Institute of the Chemical Process Industries, Inc, St Louis, MO 63141
13. Ohl, PC & WC Carlos, 1994, Hanford High-Level Evaporator/Crystallizer Corrosion Evaluation, Presented at Corrosion 94, NACE International, Houston TX 77218
14. Revie, WW, 2000. Uhlig's Corrosion Handbook, 2nd Edition, Wiley-Interscience, New York, NY 10158
15. Sedriks, AJ, 1996, Corrosion of Stainless Steels, John Wiley & Sons, Inc., New York, NY.
16. Smith, H. D. and M. R. Elmore, 1992, *Corrosion Studies of Carbon Steel under Impinging Jets of Simulated Slurries of Neutralized Current Acid Waste (NCAW) and Neutralized Cladding Removal Waste (NCRW)*, PNL-7816, Pacific Northwest Laboratory, Richland, Washington.
17. Zapp, PE, 1998, *Preliminary Assessment of Evaporator Materials of Construction*, BNF—003-98-0029, Rev 0, Westinghouse Savannah River Co., Inc for BNFL Inc.

Bibliography:

1. CCN 130170, Blackburn, LD to PG Johnson, Internal Memo, Westinghouse Hanford Co, Evaluation of 240-AR Chloride Limit, August 15, 1991.
2. CCN 130171, Ohl, PC to PG Johnson, Internal Memo, Westinghouse Hanford Co, Technical Bases for Cl- and pH Limits for Liquid Waste Tank Cars, MA: PCO:90/01, January 16, 1990.
3. CCN 130173, Dillon, CP (Nickel Development Institute), Personal Communication to J R Divine (ChemMet, Ltd., PC), 3 Feb 2000.
4. Kirch, N. W., 1984, Technical Basis for Waste Tank Corrosion Specifications, SD-WM-TI-150, Rockwell Hanford Operations, Richland, Washington.

PLANT ITEM MATERIAL SELECTION DATA SHEET

24590-WTP-RPT-PR-04-0001, Rev. B
WTP Process Corrosion Data

PROCESS CORROSION DATA SHEET

Component(s) (Name/ID #) Treated LAW concentrate storage vessel (TCP-VSL-00001)

Facility PTF

In Black Cell? Yes

Chemicals	Unit[1]	Contract Maximum		Non-Routine		Notes
		Leach	No leach	Leach	No Leach	
Aluminum	g/l	3.9E+01	3.5E+01			
Chloride	g/l	1.8E+01	2.0E+01			
Fluoride	g/l	1.8E+01	2.0E+01			
Iron	g/l	2.8E+00	2.9E+00			
Nitrate	g/l	2.7E+02	2.9E+02			
Nitrite	g/l	8.2E+01	8.9E+01			
Phosphate	g/l	5.9E+01	6.3E+01			
Sulfate	g/l	3.1E+01	3.4E+01			
Mercury	g/l	9.0E-01	3.1E-02			
Carbonate	g/l	1.3E+02	1.1E+02			
Undissolved solids	wt%					
Other (NaMnO4, Pb,...)	g/l					
Other	g/l					
pH	N/A					Note 3
Temperature	°F					Note 2

List of Organic Species:

References

System Description: 24590-PTF-3YD-TCP-00001, Rev 0
Mass Balance Document: 24590-WTP-M4C-V11T-00005, Rev A
Normal Input Stream #: TLP02, TCP03
Off Normal Input Stream # (e.g., overflow from other vessels): FRP03, UFP08
P&ID: 24590-PTF-M6-TCP-P0001, Rev 0
PFD: 24590-PTF-M5-V17T-P0006, Rev 0
Technical Reports:

Notes:

1. Concentrations less than 1x 10^{-4} g/l do not need to be reported; list values to two significant digits max.
2. T normal operation 122 °F to 150 °F (24590-PTF-MVC-TCP-00001, Rev 0)
3. pH approximately 12to 14

Assumptions:

PLANT ITEM MATERIAL SELECTION DATA SHEET

4.12.1 Treated LAW Concentrate Storage Vessel (TCP-VSL-00001)

Routine Operations

The treated LAW concentrate storage vessel (TCP-VSL-00001) is designed to receive a continuous feed from the treated LAW evaporator separator vessel (TLP-SEP-00001). The treated LAW concentrate is then transferred in batches to the LAW vitrification facility, as required for continuous glass production. A batch transfer (~9300 gal) will be required each time one of the concentrate receipt vessels (LCP-VSL-00001/2) in the LAW vitrification facility is empty. Capability is also maintained to transfer to a future LAW vitrification facility, per WTP contract requirements (DOE 2000). The batch transfer frequency may fluctuate, as it is based on a design feed rate of LAW fluid to the glass melters. The treated LAW concentrate storage vessel (TCP-VSL-00001) is designed to provide 7 days of lag storage in the event that the PT facility is not able to provide concentrate feed. The lag storage batch volume is based on the average treated LAW rate needed to support ILAW glass production of 80 t/day.

The normal influent temperature of the LAW concentrate is 122 °F. TCP-VSL-00001 is equipped with a high-pressure steam injection system (109 psig and 343 °F from the Basis of Design, 24590-WTP-DB-ENG-01-001) to maintain fluid temperature above the freezing point (77 to 100 °F), depending on envelope being processed. This is approximately the point at which crystallization or precipitation of solids occurs. Should solids form, or be transferred to TCP-VSL-00001, PJMs are available to aid in the suspension of particles and homogenize the LAW concentrate for transfer. Wash rings and a high-pressure steam ejector system are installed for cleaning or decontamination of the vessel and internals. TCP-VSL-00001 vents to a scrubber, PVP-SCB-00002, via a collection header.

The PJMs in TCP-VSL-00001 will be operated to suspend solids and maintain a homogeneous mixture. They can be active as long as the liquid level in the vessel is above the PJM low-level setpoint.

Non-Routine Operations that Could Affect Corrosion/Erosion

TCP-VSL-00001 may also receive treated LAW from the IX treated LAW collection vessels (CXP-VSL-00026-A/B/C), bypassing the treated LAW evaporator system. Under infrequent operating conditions, treated solids from the ultrafiltration feed vessels (UFP-VSL-00002A/B) may also be blended with the treated LAW concentrate in TCP-VSL-00001 if the solids meet the specifications for LAW vitrification.

This is not expected to occur very often and requires a jumper, not normally installed, on the provided transfer line.

PLANT ITEM MATERIAL SELECTION DATA SHEET

R10684974

TLP-VSL-00009A&B, (PTF)
LAW SBS Condensate Receipt Vessels

- Design Temperature (°F)(max/min): 192/40
- Design Pressure (psig) (max/min): 15/-8
- Location: incell
- PJM Discharge Velocity (fps): 40
- Drive Cycle: 25 % (at 40 fps)

ISSUED BY
RPP-WTP PDC

Offspring items

TLP-PJM-00001 – TLP-PJM-00016

Contents of this document are Dangerous Waste Permit affecting

Operating conditions are as stated on attached Process Corrosion Data Sheet

Operating Modes Considered:

- Normal operating conditions at the stated temperature

Materials Considered:

Material (UNS No.)	Relative Cost	Acceptable Material	Unacceptable Material
Carbon Steel	0.23		X
304L (S30403)	1.00		X
316L (S31603)	1.18		X
6% Mo (N08367/N08926)	7.64	X	
Alloy 22 (N06022)	11.4	X	
Ti-2 (R50400)	10.1		X

Recommended Material: UNS N08367 or N08926

Recommended Corrosion Allowance: 0.040 inch (includes 0.024 inch corrosion allowance and 0.016 inch general erosion allowance; localized protection is required as discussed in section j)

Process & Operations Limitations:

- None

STEVEN WAKEMAN VAIL
STATE OF WASHINGTON
39250
REGISTERED
PROFESSIONAL ENGINEER
EXPIRES: 12/07/07

6/13/06

Please note that source, special nuclear and byproduct materials, as defined in the Atomic Energy Act of 1954 (AEA), are regulated at the U.S. Department of Energy (DOE) facilities exclusively by DOE acting pursuant to its AEA authority. DOE asserts, that pursuant to the AEA, it has sole and exclusive responsibility and authority to regulate source, special nuclear, and byproduct materials at DOE-owned nuclear facilities. Information contained herein on radionuclides is provided for process description purposes only.

This bound document contains a total of 6 sheets.

REV	DATE	REASON FOR REVISION	PREPARER	CHECKER	APPROVER
2	6/13/06	Issued for Permitting Use			
1	1/6/05	Issued for Permitting Use	DLA	DA for JRD	SWV
0	3/24/04	Issued for Permitting Use	DLA	JRD	APR

PLANT ITEM MATERIAL SELECTION DATA SHEET

Corrosion Considerations:

These vessels receive LAW SBS vitrification effluent and effluents recycles from pretreatment including streams from RLD-VSL-00005, RLD-TK-00006A/B, RLD-VSL-00017A/B, and TCP-VSL-00001. 5 M NaOH is used to adjust the pH as needed. Vessels could also receive non-routinely pretreatment off-specification effluents. Wash rings are available. Emptying ejectors, located external to the vessel, are available for emptying vessel heel.

a General Corrosion
The solution is neutral to slightly alkaline pH. According to Hamner (1981) and others, the uniform corrosion rate of 304L and higher alloys at the stated operating temperatures is small, <1 mpy.

Conclusion:
If the temperature remains in the stated operating conditions and the environment remains alkaline, 304L would be satisfactory.

b Pitting Corrosion
Chloride is known to cause pitting in acid and neutral solutions. Dillon (2000) is of the opinion that in alkaline solutions, pH>12, chlorides are likely to promote pitting only in tight crevices. Dillon and Koch (1995) are of the opinion that fluoride will have little effect.

Based on the data of Phull (2000) and others, 10,000 ppm chloride at 190°F and at neutral pH requires at least a 6% Mo alloy.

Conclusion:
Localized corrosion, such as pitting, is common and would be a concern for the 300 series stainless steels with the expected halide levels. Under these conditions, 6% Mo alloy or better is required.

c End Grain Corrosion
End grain corrosion only occurs in metal with exposed end grains and in highly oxidizing acid conditions.

Conclusion:
Not applicable to this system.

d Stress Corrosion Cracking
The exact amount of chloride required to cause stress corrosion cracking is unknown. In part this is because the amount varies with temperature, metal sensitization, and the environment. But it is also unknown because chloride tends to concentrate under heat transfer conditions, by evaporation, and electrochemically during a corrosion process. Hence, even as little as 10 ppm can lead to cracking under some conditions. At the stated halide concentration and normal temperatures, a 6% Mo alloy is required.

Conclusion:
Because of the normal operating environment 316L stainless steel is not expected to be acceptable. A 6% Mo is recommended.

e Crevice Corrosion
The pitting discussion covers this area.

Conclusion:
See Pitting

f Corrosion at Welds
Corrosion at welds is not considered a problem in the proposed environment.

Conclusion:
Weld corrosion is not considered a problem for this system.

g Microbiologically Induced Corrosion (MIC)
The proposed operating temperatures are suitable for microbial growth but, additionally, the location of the system in the process suggests little chance of the introduction of microbes unless introduced by the plant wash system.

Conclusion:
MIC is not expected to be a problem.

h Fatigue/Corrosion Fatigue
Corrosion fatigue is not expected to be a problem in this vessel.

Conclusions
Not considered to be a problem.

PLANT ITEM MATERIAL SELECTION DATA SHEET

i Vapor Phase Corrosion
The vapor phase portion of the vessel will be spattered with solution and may not be thoroughly rinsed and pitting or crevice corrosion may be a concern. A more resistant 6% Mo alloy is recommended.

Conclusion:
See Pitting.

j Erosion
Based on past experiments by Smith & Elmore (1992), the solids are soft and erosion is not expected to be a concern for the vessel wall. Based on 24590-WTP-RPT-M-04-0008, a general erosion allowance of 0.016 inch is adequate for components with maximum solids content up to 27.3 wt%. Additional 6% Mo alloy should be provided as localized protection for the applicable portions of the bottom head to accommodate PJM discharge velocities of up to 12 m/s with solids concentrations of 3.4 wt% for a usage of 30 % operation as documented in 24590-WTP-M0E-50-00003. The vessels require at least 0.056-inch additional protection. The 3.4 wt% is considered to be conservative and is based on the WTP Prime Contract maximum. During normal operation, the solids content of the vessels is expected to be well below the anticipated maximum.

The wear of the PJM nozzles can occur from flow for both the discharge and reflood cycles of operation. At least 0.036 inch of additional 6% Mo alloy should be provided on the inner surface of the PJM nozzle to accommodate wear due to PJM discharge and suction velocities with solids concentrations of 3.4 wt% for a usage of 30 % operation as documented in 24590-WTP-M0E-50-00003.

Conclusion:
The recommended corrosion allowance provides sufficient protection for erosion of the vessel wall. Additional localized protection for the bottom head will accommodate PJM discharge velocities and for the PJM nozzles will accommodate PJM discharge and reflood velocities.

k Galling of Moving Surfaces
Not applicable.

Conclusion:
Not applicable.

l Fretting/Wear
Not expected to be applicable.

Conclusion:
Not a concern.

m Galvanic Corrosion
For the environment and the proposed alloys, this is not believed to be a concern.

Conclusion:
Not a concern.

n Cavitation
None expected.

Conclusion:
Not believed to be of concern.

o Creep
The temperatures are too low to be a concern.

Conclusion:
Not applicable.

p Inadvertent Nitric Acid Addition
Higher chloride contents and higher temperatures usually require higher alloy materials. Nitrate ions inhibit the pitting and crevice corrosion of stainless alloys. Furthermore, nitric acid passivates these alloys; therefore, lower pH values brought about by increases in the nitric acid content of process fluid will not cause higher corrosion rates for these alloys. The upset condition that was most likely to occur is lowering of the pH of the vessel content by inadvertent addition of 0.5 M nitric acid. Lowering of pH may make a chloride-containing solution more likely to cause pitting of stainless alloys. Increasing the nitric acid content of the process fluid adds more of the pitting-inhibiting nitrate ion to the process fluid. In addition, adding the nitric acid solution to the stream will dilute the chloride content of the process fluid.

Conclusion:
The recommended materials will be able to withstand a plausible inadvertent addition of 0.5 M nitric acid for a limited period.

PLANT ITEM MATERIAL SELECTION DATA SHEET

References:

1. 24590-WTP-M0E-50-00003, *Wear Allowance for WTP Waste Slurry Systems*
2. 24590-WTP-RPT-M-04-0008, Rev. 2, *Evaluation Of Stainless Steel Wear Rates In WTP Waste Streams At Low Velocities*
3. 24590-WTP-RPT-PR-04-0001, Rev. B, *WTP Process Corrosion Data*
4. Dillon, CP (Nickel Development Institute), Personal Communication to J R Divine (ChemMet, Ltd., PC), 3 Feb 2000.
5. Hamner, NE, 1981, *Corrosion Data Survey*, Metals Section, 5th Ed, NACE International, Houston, TX
6. Koch, GH, 1995, *Localized Corrosion in Halides Other Than Chlorides*, MTI Pub No. 41, Materials Technology Institute of the Chemical Process Industries, Inc, St Louis, MO 63141
7. Phull, BS, WL Mathay, & RW Ross, 2000, *Corrosion Resistance of Duplex and 4-6% Mo-Containing Stainless Steels i FGD Scrubber Absorber Slurry Environments*, Presented at Corrosion 2000, Orlando, FL, March 26-31, 2000, NACE International, Houston TX 77218.
8. Smith, H. D. and M. R. Elmore, 1992, *Corrosion Studies of Carbon Steel under Impinging Jets of Simulated Slurries of Neutralized Current Acid Waste (NCAW) and Neutralized Cladding Removal Waste (NCRW)*, PNL-7816, Pacific Northwest Laboratory, Richland, Washington.

Bibliography:

1. Blackburn, LD to PG Johnson, Internal Memo, Westinghouse Hanford Co, *Evaluation of 240-AR Chloride Limit*, August 15, 1991.
2. Danielson, MJ & SG Pitman, 2000, *Corrosion Tests of 316L and Hastelloy C-22 in Simulated Tank Waste Solutions*, PNWD-3015 (BNFL-RPT-019, Rev 0)), Pacific Northwest Laboratory, Richland WA.
3. Davis, JR (Ed), 1987, *Corrosion, Vol 13*, In "Metals Handbook", ASM International, Metals Park, OH 44073
4. Davis, JR (Ed), 1994, *Stainless Steels*, In ASM Metals Handbook, ASM International, Metals Park, OH 44073
5. Divine, JR, 1986, Letter to A.J. Diliberto, *Reports of Experimentation*, Battelle, Pacific Northwest Laboratories, Richland, WA 99352
6. Jenkins, CF, 1998, *Performance of Evaporators in High Level Radioactive Chemical Waste Service*, Presented at Corrosion 98, NACE International, Houston TX 77084
7. Jenkins, CF. SRTC, teleconference with JR Divine, RPP-WTP, 16 February, 2000.
8. Jones, RH (Ed.), 1992, *Stress-Corrosion Cracking*, ASM International, Metals Park, OH 44073
9. Ohl, PC to PG Johnson, Internal Memo, Westinghouse Hanford Co, *Technical Bases for Cl^- and pH Limits for Liquid Waste Tank Cars*, MA: PCO:90/01, January 16, 1990.
10. Ohl, PC & WC Carlos, 1994, *Hanford High-Level Evaporator/Crystallizer Corrosion Evaluation*, Presented at Corrosion 94, NACE International, Houston TX 77218.
11. Revie, WW, 2000. *Uhlig's Corrosion Handbook*, 2nd Edition, Wiley-Interscience, New York, NY 10158
12. Sedriks, AJ, 1996, *Corrosion of Stainless Steels*, John Wiley & Sons, Inc., New York, NY 10158
13. Uhlig, HH, 1948, *Corrosion Handbook*, John Wiley & Sons, New York, NY 10158
14. Van Delinder, LS (Ed), 1984, *Corrosion Basics*, NACE International, Houston, TX 77084
15. Wilding, MW & BE Paige, 1976, *Survey on Corrosion of Metals and Alloys in Solutions Containing Nitric Acid*, ICP-1107, Idaho National Engineering Laboratory, Idaho Falls, ID.
16. Zapp, PE, 1998, *Preliminary Assessment of Evaporator Materials of Construction*, BNF—003-98-0029, Rev 0, Westinghouse Savannah River Co., Inc for BNFL Inc.

PLANT ITEM MATERIAL SELECTION DATA SHEET

PROCESS CORROSION DATA SHEET

Component(s) (Name/ID #) LAW SBS condensate receipt vessel (TLP-VSL-00009A/B)

Facility PTF

In Black Cell? Yes

Chemicals	Unit[1]	Contract Maximum		Non-Routine		Notes
		Leach	No leach	Leach	No Leach	
Aluminum	g/l	4 08E-02	4 10E-02			
Chloride	g/l	9 69E+00	1 06E+01			
Fluoride	g/l	2 12E+00	2 33E+00			
Iron	g/l	2 08E-02	2 01E-02			
Nitrate	g/l	4 08E-01	3 45E-01			
Nitrite	g/l					
Phosphate	g/l					
Sulfate	g/l					
Mercury	g/l	7 92E-01	2 69E-02			
Carbonate	g/l					
Undissolved solids	wt%					
Other (NaMnO4, Pb,...)	g/l					
Other	g/l					
pH	N/A					Note 3
Temperature	°F					Note 2

List of Organic Species:

References

System Description 24590-PTF-3YD-TLP-00001, Rev 0
Mass Balance Document 24590-WTP-M4C-V11T-00005, Rev A
Normal Input Stream # TLP12, RLD21
Off Normal Input Stream # (e g , overflow from other vessels) N/A
P&ID 24590-PTF-M6-TLP-P0001, Rev 0
PFD 24590-PTF-M5-V17T-P0005, Rev 0
Technical Reports:

Notes:

1 Concentrations less than 1x 10^{-4} g/l do not need to be reported, list values to two significant digits max
2 T normal operation 113 °F (24590-PTF-MVC-TLP-00001, Rev 0)
3 pH approximately 6 8 to 9
4 5M NaOH can be added to these vessels

Assumptions:

4.13.5 LAW SBS Condensate Receipt Vessel (TLP-VSL-00009 A/B)

Routine Operations

The two LAW SBS condensate receipt vessels (TLP-VSL-00009A/B), each with a batch volume of 80,000 gallons, receive LAW SBS vitrification effluent and effluents recycled from pretreatment. These streams include the following:

- LAW SBS condensate from the vitrification SBS condensate vessel (RLD-VSL-00005)
- Off-specification effluent from the process condensate tanks (RLD-TK-00006A/B)
- Off-specification effluent from the alkaline effluent vessels (RLD-VSL-00017A/B)
- Treated LAW concentrate recycle from the treated LAW concentrate storage vessel (TCP-VSL-00001)

LAW SBS condensate is transferred from the LAW vitrification facility to the PT facility through a pipeline installed within an underground trench.

The receipt vessels will alternate duty. One vessel receives LAW SBS condensate, any recycles, and adds 5 M caustic (NaOH) to adjust the pH as needed. A remote sampling point on the LAW SBS evaporator feed line is used to sample for pH and determine necessary adjustments. The second vessel will feed the evaporator system using the variable-speed LAW SBS condensate feed pumps (TLP-PMP-00005A/B), which are controlled by level indication in the separator vessel. The vessels will switch duties as needed/available to keep a continuous feed flow to the evaporator.

Each vessel is equipped with PJMs that blend and maintain solids suspension in the waste.

Non-Routine Operations that Could Affect Corrosion/Erosion

Under infrequent conditions receives pretreatment off-specification effluents. The two receipt vessels (TLP-VSL-00009A/B) will overflow to the ultimate overflow vessel (PWD-VSL-00033). For purposes of decontamination, each vessel is equipped with wash rings.

PLANT ITEM MATERIAL SELECTION DATA SHEET

R10274617

TLP-COND-00001 (PTF)
Treated LAW Evaporator Primary Condenser

- Design Temperature (°F): 250/49
- Design Pressure (psig) (Max/min): Shell side: 50/FV; Tube side: 100/FV
- Location: outcell

Contents of this document are Dangerous Waste Permit affecting

Operating conditions are as stated on sheet 5

ISSUED BY
RAP-WTP POC
KW 3/25/04
INIT DATE

Options Considered:

- Stream to condenser is pH ≈7, temperature 122 °F to 250 °F

Materials Considered:

Material (UNS No.)	Relative Cost	Acceptable Material	Unacceptable Material
Carbon Steel	0.23		X
304L (S30403)	1.00	X	
316L (S31603)	1.18	X	
6% Mo (N08367/N08926)	7.64	X	
Alloy 22 (N06022)	11.4	X	
Ti-2 (R50400)	10.1		X

Recommended Material: 316 (max 0.030% C; dual certified)

Recommended Corrosion Allowance: Shell side: 0.04 inch; Tube side: N/A

Process & Operations Limitations:

- None

STEVEN WAKEMAN VAIL
STATE OF WASHINGTON
39250
REGISTERED PROFESSIONAL ENGINEER
EXPIRES: 12/07/05
3/24/04

Please note that source, special nuclear and byproduct materials, as defined in the Atomic Energy Act of 1954 (AEA), are regulated at the U.S. Department of Energy (DOE) facilities exclusively by DOE acting pursuant to its AEA authority. DOE asserts, that pursuant to the AEA, it has sole and exclusive responsibility and authority to regulate source, special nuclear, and byproduct materials at DOE-owned nuclear facilities. Information contained herein on radionuclides is provided for process description purposes only.

This bound document contains a total of 5 sheets.

REV	DATE	REASON FOR REVISION	PREPARER	CHECKER	APPROVER
0	3/24/04	Issued for Permitting Use			G.P. Bangus

PLANT ITEM MATERIAL SELECTION DATA SHEET

Corrosion Considerations:

a General Corrosion
Uniform corrosion is not a concern at the normal operating conditions. 304L would be suitable.

In 2N nitric acid cleaning, the corrosion rates are low. The amounts of halides and solids are also small so there is little concern about excessive uniform attack.

Conclusion:
At temperatures less than 140°F, either 304L or 316L is expected to be sufficiently resistant to the waste solution with a probable general corrosion rate of less than 1 mpy.

b Pitting Corrosion
At the expected normal operating conditions, 304L is expected to be acceptable. Because of the high design temperature, 316L is recommended.

Conclusion:
Based on the expected operating conditions the vessel 304L stainless steel is satisfactory, but 316L is recommended to provide additional pitting resistance should chlorides concentrate.

c End Grain Corrosion
End grain corrosion only occurs in metal with exposed end grains and in highly oxidizing acid conditions.

Conclusion:
Not applicable to this system.

d Stress Corrosion Cracking
The exact amount of chloride required to cause stress corrosion cracking is unknown. In part this is because the amount varies with temperature, metal sensitization, and the environment. But it is also unknown because chloride tends to concentrate under heat transfer conditions, by evaporation, and electrochemically during a corrosion process. Hence, even as little as 10 ppm can lead to cracking under some conditions. Generally, as seen in Sedriks (1996) and Davis (1987), stress corrosion cracking does not usually occur below about 140°F.

Conclusion:
Because of the normal operating environment as well as that which can occur during off normal conditions, the minimum alloy recommended is 316L stainless steel.

e Crevice Corrosion
The pitting discussion covers this area.

Conclusion:
See Pitting.

f Corrosion at Welds
Corrosion at welds is not considered a problem in the proposed environment.

Conclusion:
Weld corrosion is not considered a problem for this system.

g Microbiologically Induced Corrosion (MIC)
The proposed operating conditions on the process side are acceptable for microbe growth. The use of treated process water makes infection unlikely.

Conclusion:
MIC is not considered a concern.

PLANT ITEM MATERIAL SELECTION DATA SHEET

h Fatigue/Corrosion Fatigue
Corrosion fatigue is not expected to be a concern.

Conclusions
Not believed to be a concern.

i Vapor Phase Corrosion
The vapor phase portion of the shell will be continually washed with condensing vapors.

Conclusion:
No vapor phase corrosion is anticipated.

j Erosion
Velocities within the condenser are expected to be low.

Conclusion:
Not a concern.

k Galling of Moving Surfaces
Not applicable.

Conclusion:
Not applicable.

l Fretting/Wear
Not expected to be a concern.

Conclusion:
Not a concern.

m Galvanic Corrosion
For the environment and the proposed alloys, there is not believed to be a concern.

Conclusion:
Not a concern.

n Cavitation
None expected.

Conclusion:
Not believed to be of concern.

o Creep
The temperatures are too low to be a concern.

Conclusion:
Not applicable.

PLANT ITEM MATERIAL SELECTION DATA SHEET

References:

1. Davis, JR (Ed), 1987, *Corrosion, Vol 13*, In "Metals Handbook", ASM International, Metals Park, OH 44073
2. Sedriks, AJ, 1996, *Corrosion of Stainless Steels*, John Wiley & Sons, Inc , New York, NY 10158

Bibliography:

1. Agarwal, DC, *Nickel and Nickel alloys*, In. Revie, WW, 2000 *Uhlig's Corrosion Handbook*, 2nd Edition, Wiley-Interscience, New York, NY 10158
2. Danielson, MJ & SG Pitman, 2000, *Corrosion Tests of 316L and Hastelloy C-22 in Simulated Tank Waste Solutions*, PNWD-3015 (BNFL-RPT-019, Rev 0), Pacific Northwest Laboratory, Richland WA
3. Davis, JR (Ed), 1994, *Stainless Steels*, In ASM Metals Handbook, ASM International, Metals Park, OH 44073
4. Hamner, NE, 1981, *Corrosion Data Survey*, Metals Section, 5th Ed, NACE International, Houston, TX
5. Jones, RH (Ed.), 1992, *Stress-Corrosion Cracking*, ASM International, Metals Park, OH 44073
6. Koch, GH, 1995, *Localized Corrosion in Halides Other Than Chlorides*, MTI Pub No. 41, Materials Technology Institute of the Chemical Process Industries, Inc, St Louis, MO 63141
7. Phull, BS, WL Mathay, & RW Ross, 2000, *Corrosion Resistance of Duplex and 4-6% Mo-Containing Stainless Steels i FGD Scrubber Absorber Slurry Environments*, Presented at Corrosion 2000, Orlando, FL, March 26-31, 2000, NACE International, Houston TX 77218
8. Uhlig, HH, 1948, *Corrosion Handbook*, John Wiley & Sons, New York, NY 10158
9. Van Delinder, LS (Ed), 1984, *Corrosion Basics*, NACE International, Houston, TX 77084

PLANT ITEM MATERIAL SELECTION DATA SHEET

OPERATING CONDITIONS

Material Selection Data Sheets for
The Pretreatment Facility

Materials Selection Data

Component (Name/ID) TLP-COND-00001
System TLP

Operations

Chemicals	Unit	Cold Startup	Normal Operation*	Standby/Idle	Cleaning	Accident
Aluminum	g/l	N/A	8.6E-07	N/A	N/A	N/A
Chloride	g/l		4.8E-07			
Fluoride	g/l		1.1E-08			
Hydroxide	g/l		9.8E-08			
Iron	g/l		7.2E-08			
Nitrate	g/l		9.3E-07			
Nitrite	g/l		1.5E-05			
Phosphate	g/l		4.6E-07			
TOC†	g/l		7.6E-07			
Sulfate	g/l		1.3E-07			
Undissolved solids	g/l		0.0E+00			
Particle size/hardness	µm (##)		N/A			
Other (Hg)	g/l		9.4E-11			
Carbonate	g/l		2.7E-08			
pH	-		6 to 8			
Dose rate, α, β/γ (inside)	Rad		N/A			
Temperature	°C		5.0E+01			
Velocity	fps		N/A			
Vibration			N/A			
Time of exposure	#		1.0E+02			

* Based on Contract Maximum Chemical A/D run at 60/6

- % of total; ## - use Mho scale

Remarks: Stream TLP01

Comments: HNO3 Vapors During Acid Cleaning of Separator and Reboiler

[X] C3 Area

[X] Flushing

† List expected organic species: N/A
Use maximum of 2 significant figures

N/A = Information not available or not in Process Engineering Scope.

R10274652

24590-PTF-N1D-TLP-P0003
Rev. 0

PLANT ITEM MATERIAL SELECTION DATA SHEET

TLP-COND-00002 & TLP-COND-00003 (PTF)
Treated LAW Evaporator Intercondenser & Aftercondenser

ISSUED BY
RPP-WTP PDC
3/25/04
INIT DATE

- Design Temperature (°F) (max/min): 250/49
- Design Pressure (psig) (Max/min): Shell side: 50/FV; Tube side: 100/FV
- Location: outcell

Contents of this document are Dangerous Waste Permit affecting

Operating conditions are as stated on sheet 5

Materials Considered:

Material (UNS No.)	Relative Cost	Acceptable Material	Unacceptable Material
Carbon Steel	0.23		X
304L (S30403)	1.00		X
316L (S31603)	1.18	X	
6% Mo (N08367/N08926)	7.64	X	
Alloy 22 (N06022)	11.4	X	
Ti-2 (R50400)	10.1		X

Recommended Material: 316 (max 0.030% C; dual certified)

Recommended Corrosion Allowance: Shell side: 0.04 inch; Tube side: N/A

Process & Operations Limitations:

- None

STEVEN WAKEMAN VAIL
STATE OF WASHINGTON
39250
REGISTERED PROFESSIONAL ENGINEER
3/25/04
EXPIRES: 12/07/05

Please note that source, special nuclear and byproduct materials, as defined in the Atomic Energy Act of 1954 (AEA), are regulated at the U.S. Department of Energy (DOE) facilities exclusively by DOE acting pursuant to its AEA authority. DOE asserts, that pursuant to the AEA, it has sole and exclusive responsibility and authority to regulate source, special nuclear, and byproduct materials at DOE-owned nuclear facilities. Information contained herein on radionuclides is provided for process description purposes only.

This bound document contains a total of 5 sheets.

REV	DATE	REASON FOR REVISION	PREPARER	CHECKER	APPROVER
0	3/25/04	Issued for Permitting Use			AP Rangus

PLANT ITEM MATERIAL SELECTION DATA SHEET

Corrosion Considerations:

a General Corrosion
Hamner (1981) lists a corrosion rate for 304 and (304L) in 2 M HNO_3 of less than 2 mpy. Davis (1994) states the corrosion rate for 304L in 12% HNO_3 will be less than about 1 mpy up to about 212°F. The amounts of halides and solids are also small so there is little concern about excessive uniform attack.

Conclusion:
At the anticipated temperatures, either 304L or 316L is expected to be sufficiently resistant to the waste solution with a probable general corrosion rate of less than 1 mpy. Because the tubes are cooled, either alloy would be satisfactory for them as well.

b Pitting Corrosion
At the expected normal operating conditions, 304L is expected to be acceptable. Because of the high design temperature, 316L is recommended.

Conclusion:
Based on the expected operating conditions of the vessel, 304L stainless steel is satisfactory, but 316L is recommended to provide additional pitting resistance should chlorides concentrate.

c End Grain Corrosion
End grain corrosion only occurs in metal with exposed end grains and in highly oxidizing acid conditions.

Conclusion:
Not applicable to this system.

d Stress Corrosion Cracking
The exact amount of chloride required to cause stress corrosion cracking is unknown. In part this is because the amount varies with temperature, metal sensitization, and the environment. But it is also unknown because chloride tends to concentrate under heat transfer conditions, by evaporation, and electrochemically during a corrosion process. Hence, even as little as 10 ppm can lead to cracking under some conditions. Generally, as seen in Sedriks (1996) and Davis (1987), stress corrosion cracking does not usually occur below about 140°F. The "L" grades are also more resistant to cracking than the higher carbon versions.

Given the environment and the lack of heat transfer into the process stream, caustic cracking is not anticipated to be a problem.

Conclusion:
Because of the normal operating environment as well as that which can occur during off normal conditions 316L is recommended.

e Crevice Corrosion
The pitting discussion covers this area.

Conclusion:
See Pitting.

f Corrosion at Welds
Corrosion at welds is not considered a problem in the proposed environment.

Conclusion:
Weld corrosion is not considered a problem for this system.

PLANT ITEM MATERIAL SELECTION DATA SHEET

g Microbiologically Induced Corrosion (MIC)
The proposed operating conditions on the process side are somewhat extreme for microbe growth. The use of treated process water makes infection unlikely.

Conclusion:
MIC is not considered a concern.

h Fatigue/Corrosion Fatigue
Corrosion fatigue is not expected to be a concern.

Conclusions
Not believed to be a concern.

i Vapor Phase Corrosion
The vapor phase portion of the shell will be continually washed with condensing vapors.

Conclusion:
No vapor phase corrosion is anticipated.

j Erosion
Velocities within the condenser are expected to be low.

Conclusion:
Not a concern.

k Galling of Moving Surfaces
Not applicable.

Conclusion:
Not applicable.

l Fretting/Wear
Not expected to be a concern.

Conclusion:
Not a concern.

m Galvanic Corrosion
For the environment and the proposed alloys, there is not believed to be a concern.

Conclusion:
Not a concern.

n Cavitation
None expected.

Conclusion:
Not believed to be of concern.

o Creep
The temperatures are too low to be a concern.

Conclusion:
Not applicable.

PLANT ITEM MATERIAL SELECTION DATA SHEET

References:

1 Davis, JR (Ed), 1987, *Corrosion, Vol 13*, In "Metals Handbook", ASM International, Metals Park, OH 44073
2. Davis, JR (Ed), 1994, *Stainless Steels*, In ASM Metals Handbook, ASM International, Metals Park, OH 44073
3. Hamner, NE, 1981, *Corrosion Data Survey*, Metals Section, 5th Ed, NACE International, Houston, TX
4. Sedriks, AJ, 1996, *Corrosion of Stainless Steels*, John Wiley & Sons, Inc., New York, NY 10158

Bibliography:

1. Agarwal, DC, *Nickel and Nickel alloys*, In: Revie, WW, 2000. *Uhlig's Corrosion Handbook*, 2nd Edition, Wiley-Interscience, New York, NY 10158
2 Danielson, MJ & SG Pitman, 2000, *Corrosion Tests of 316L and Hastelloy C-22 in Simulated Tank Waste Solutions*, PNWD-3015 (BNFL-RPT-019, Rev 0), Pacific Northwest Laboratory, Richland WA
3 Jones, RH (Ed.), 1992, *Stress-Corrosion Cracking*, ASM International, Metals Park, OH 44073
4. Koch, GH, 1995, *Localized Corrosion in Halides Other Than Chlorides*, MTI Pub No. 41, Materials Technology Institute of the Chemical Process Industries, Inc, St Louis, MO 63141
5. Uhlig, HH, 1948, *Corrosion Handbook*, John Wiley & Sons, New York, NY 10158
6. Van Delinder, LS (Ed), 1984, *Corrosion Basics*, NACE International, Houston, TX 77084

PLANT ITEM MATERIAL SELECTION DATA SHEET

OPERATING CONDITIONS

Material Selection Data Sheets for
The Pretreatment Facility

Materials Selection Data

Component (Name/ID) TLP-COND-00002/00003
System TLP

Operations

Chemicals	Unit	Cold Startup	Normal Operation*	Standby/Idle	Cleaning	Accident
Aluminum	g/l		8.6E-07			
Chloride	g/l		4.8E-07			
Fluoride	g/l		1.1E-08			
Hydroxide	g/l		9.8E-08			
Iron	g/l		7.2E-08			
Nitrate	g/l		9.3E-07			
Nitrite	g/l		1.5E-05			
Phosphate	g/l		4.6E-07			
TOC†	g/l		7.6E-07			
Sulfate	g/l		1.3E-07			
Undissolved solids	g/l		0.0E+00			
Particle size/hardness	µm (##)		N/A			
Other (Hg)	g/l		9.4E-11			
Carbonate	g/l		2.7E-08			
pH	-		6 TO 8			
Dose rate, α, β/γ (inside)	Rad		N/A			
Temperature	°F		212			
Velocity	fps		N/A			
Vibration			N/A			
Time of exposure	#		1.0E+02			

* Based on Contract Maximum Chemical A/D run at 60/6

- % of total; ## - use Mho scale

Remarks: Stream TLP01

Comments: Trace HNO3 Vapors During Acid Cleaning of Separator and Reboiler

[X] C3 Area

[X] Flushing

† List expected organic species: N/A
Use maximum of 2 significant figures

N/A Information not available or not in Process Engineering Scope.

PLANT ITEM MATERIAL SELECTION DATA SHEET

TLP-SEP-00001 (PTF)
Treated LAW Evaporator Separator Vessel

R10686593

- Design Temperature (°F)(max/min): 175/49
- Design Pressure (psig) (internal/external): 50/14.7
- Location: incell

ISSUED BY
RPP-WTP PDC

Contents of this document are Dangerous Waste Permit affecting

Operating conditions are as stated on attached Process Corrosion Data Sheet

Options Considered:

- Normal operating conditions
- The vessel will be cleaned using 2 N HNO_3 with residual chlorides and fluorides at reduced temperatures

Materials Considered:

Material (UNS No.)	Relative Cost	Acceptable Material	Unacceptable Material
Carbon Steel	0.23		X
304L (S30403)	1.00	X	
316L (S31603)	1.18	X	
6% Mo (N08367/N08926)	7.64	X	
Alloy 22 (N06022)	11.4	X	
Ti-2 (R50400)	10.1		X

Recommended Material: 304 (max 0.030% C; dual certified)

Recommended Corrosion Allowance: 0.040 inch (includes 0.024 inch corrosion allowance and 0.004 inch general erosion allowance)

Process & Operations Limitations:

- Develop rinsing/flushing procedure for acid and water

STEVEN WAKEMAN VAIL
STATE OF WASHINGTON
39250
REGISTERED PROFESSIONAL ENGINEER
6/26/06
EXPIRES: 12/07/07

Please note that source, special nuclear and byproduct materials, as defined in the Atomic Energy Act of 1954 (AEA), are regulated at the U.S. Department of Energy (DOE) facilities exclusively by DOE acting pursuant to its AEA authority. DOE asserts, that pursuant to the AEA, it has sole and exclusive responsibility and authority to regulate source, special nuclear, and byproduct materials at DOE-owned nuclear facilities. Information contained herein on radionuclides is provided for process description purposes only.

This bound document contains a total of 7 sheets.

REV	DATE	REASON FOR REVISION	PREPARER	CHECKER	APPROVER
3	6/26/06	Issued for Permitting Use Rev 2 revision bars remain for clarity			
2	6/14/06	Issued for Permitting Use	DLA	HMK	SWV
1	1/4/04	Issued for Permitting Use	DLA	JRD	APR
0	3/24/04	Issued for Permitting Use	DLA	JRD	APR

PLANT ITEM MATERIAL SELECTION DATA SHEET

Corrosion Considerations:

a General Corrosion
The vessel has a normal operating temperature of 122°F. According to Hamner (1981), 304 (and 304L) has a corrosion rate of less than 20 mpy (500 μm/y) at 77°F and over 20 mpy in NaOH at 122°F. He shows 316 (and 316L) has a rate of less than 2 mpy up to 122°F and 50% NaOH. These data are qualified by Dillon (2000) and Sedriks (1996) who both state that the 300 series are acceptable in up to 50% NaOH at temperatures up to about 122°F. Davis (1994) states the corrosion rate for 304L will be less than about 0.1 mpy at these temperatures. Based on short term studies, Danielson & Pitman (2000), suggest a corrosion rate of about 0.5 mpy for 316L in simulated waste at 122°F. Zapp's report (1998) notes the successful use of 304L as the shell of the Savannah River evaporators.

Uhlig (1948) has shown that pure nickel is more resistant to corrosion by NaOH than stainless steel. However, as Divine pointed out (1986), the presence of complexing agents [part of the total organic carbon (TOC) measured] may reverse the trend. Agarwal (2000) states that the higher nickel alloys are highly corrosion resistant though specific mention of alkaline media is not made. Their high nickel content is a positive feature. The general literature mainly discusses cracking problems (see below) rather than uniform corrosion.

Ohl & Carlos (1994), in their review of the 242-A Evaporator, found that after about 2 years of operation in waste similar to LAW, the corrosion of 304L was less than the accepted variability of the plate. Thus, the NDE data are sufficiently uncertain to prevent definite conclusions from being drawn.

Wilding and Paige (1976) have shown that in 5% nitric acid with 1000 ppm fluoride at 290°F, the corrosion rate of 304L can be kept as low as 5 mpy by the use of Al^{+++}. Additionally, Sedriks (1996) has noted with 10% (≈2N) nitric acid and 3,000 ppm fluoride at 158°F, the corrosion rate of 304L is over 4,000 mpy. Therefore, there is a concern about excessive corrosion rates during acid cleaning unless the fluoride is well inhibited. The use of acid cleaning while operating at higher temperatures would require the use of a 6% Mo alloy. Keeping the vessel as cool as possible would reduce the extent of attack by chloride (pitting and crevice corrosion) and, with the addition of Al^{+++}, general corrosion due to fluoride. 304L will be suitable if properly protected by temperature and fluoride complexants such as Al^{+++}.

Conclusion:
At temperatures less than 140°F, 304L or 316L are expected to be sufficiently resistant to the waste solution with a probable general corrosion rate of less than 1 mpy. The Savannah River work suggests they will be acceptable to higher temperatures in waste.

b Pitting Corrosion
Chloride is notorious for causing pitting in acid and neutral solutions. Dillon (2000) is of the opinion that in alkaline solutions, pH>12, chlorides are likely to promote pitting only in tight crevices. Dillon and Koch (1995) is of the opinion that fluoride will have little effect.

Revie (2000) and Uhlig (1948) both note nitrate inhibits chloride corrosion. Therefore the high nitrate concentrations in the LAW are expected to be beneficial. The 18,000 – 20,000 ppm chloride concentration will mean residual chloride is present during acid cleaning.

The apparent lack of pitting in the 242-A Evaporator suggests 304L is acceptable at the design conditions - ≤ 140°F. Zapp (1998) confirms the good behavior of 304L in the shell. The 304L shell of the evaporator at Savannah River has performed successfully for approximately 30 years.

Conclusion:
Localized corrosion, such as pitting, is common but probably can be mitigated by alloys with higher nickel and molybdenum contents even under heat transfer conditions or where deposits can form. Based on Savannah River data, the vessel is expected to be free of significant corrosion and can be constructed of 304L. Rinsing/flushing procedure will be developed to eliminate concern during acid cleaning.

c End Grain Corrosion
End grain corrosion only occurs in metal with exposed end grains and in highly oxidizing acid conditions.

Conclusion:
Not applicable to this system.

d Stress Corrosion Cracking
The exact amount of chloride required to stress corrosion crack stainless steel is unknown. In part this is because the amount varies with temperature, metal sensitization, and the environment and because chloride tends to concentrate under heat transfer conditions, by evaporation, and electrochemically during a corrosion process. Hence, even as little as 10 ppm can lead to cracking under some conditions. Generally, as seen in Sedriks (1996) and Davis (1987), stress corrosion cracking does not usually occur below about 140°F. Further, the use of "L" grade stainless reduces the opportunity for sensitization. From the above references, it is observed that alkaline conditions reduce the probability of the initiation of stress corrosion cracking to essentially zero. However, should a pit or crevice, including a deposit, be present where the environment can become acid, then the alkaline environment will no longer have an effect and stress corrosion can occur.

Caustic cracking tends not to occur below 140°F (Sedriks 1996; Dillon 2000)) or below 212°F (Zapp 1998). Because the maximum operating temperature is 122°F, all sources suggest caustic cracking should be minimal. Zapp's data from the Savannah River Site evaporators is auspicious for the use of 304L for the vessel.

Conclusion:
The use of 304L is expected to be acceptable for the vessel during operation. During rinsing and flushing, the temperature should be kept as low as possible. A rinsing/flushing procedure is needed to define temperature/time limits.

PLANT ITEM MATERIAL SELECTION DATA SHEET

e Crevice Corrosion
See Pitting.

Conclusion:
See Pitting.

f Corrosion at Welds
Corrosion at welds is not considered a problem in the proposed environment.

Conclusion:
Weld corrosion is not considered a problem for this system.

g Microbiologically Induced Corrosion (MIC)
The proposed operating conditions are too extreme for MIC with high temperatures and pH. Additionally, MIC is not normally observed in operating systems except for those exposed to process water.

Conclusion:
MIC is not considered a problem.

h Fatigue/Corrosion Fatigue
Corrosion fatigue is a not expected to be a concern.

Conclusions
Not applicable.

i Vapor Phase Corrosion
Due to flashing liquid, the surface is expected to be continually sprayed with liquid and be kept relatively clean.

Conclusion:
No vapor phase corrosion is expected.

j Erosion
Velocities within the vessel are expected to be low. Erosion allowance of 0.004 inch for components with low solids content (< 2 wt%) at low velocities is based on 24590-WTP-RPT-M-04-0008.

Conclusion:
Not a concern.

k Galling of Moving Surfaces
Not applicable.

Conclusion:
Not applicable.

l Fretting/Wear
No contacting surfaces expected.

Conclusion:
Not applicable.

m Galvanic Corrosion
No dissimilar metals are present.

Conclusion:
Not applicable.

n Cavitation
None expected.

Conclusion:
Not believed to be of concern.

o Creep
The temperatures are too low to be a concern.

Conclusion:
Not applicable.

PLANT ITEM MATERIAL SELECTION DATA SHEET

p Inadvertent Nitric Acid Addition

Higher chloride contents and higher temperatures usually require higher alloy materials. Nitrate ions inhibit the pitting and crevice corrosion of stainless alloys. Furthermore, nitric acid passivates these alloys; therefore, lower pH values brought about by increases in the nitric acid content of process fluid will not cause higher corrosion rates for these alloys. The upset condition that was most likely to occur is lowering of the pH of the vessel content by inadvertent addition of 0.5 M nitric acid. Lowering of pH may make a chloride-containing solution more likely to cause pitting of stainless alloys. Increasing the nitric acid content of the process fluid adds more of the pitting-inhibiting nitrate ion to the process fluid. In addition, adding the nitric acid solution to the stream will dilute the chloride content of the process fluid.

Conclusion:

The recommended materials will be able to withstand a plausible inadvertent addition of 0.5 M nitric acid for a limited period.

PLANT ITEM MATERIAL SELECTION DATA SHEET

References:

1. 24590-WTP-RPT-M-04-0008, Rev. 2, *Evaluation Of Stainless Steel Wear Rates In WTP Waste Streams At Low Velocities*
2. 24590-WTP-RPT-PR-04-0001, Rev. B, *WTP Process Corrosion Data*
3. CCN 130172, Divine, JR, 1986, Letter to A.J. Diliberto, *Reports of Experimentation*, Battelle, Pacific Northwest Laboratories, Richland, WA 99352
4. CCN 130173, Dillon, CP (Nickel Development Institute), Personal Communication to J R Divine (ChemMet, Ltd., PC), 3 Feb 2000
5. Agarwal, DC, *Nickel and Nickel Alloys*, In: Revie, WW, 2000. *Uhlig's Corrosion Handbook*, 2nd Edition, Wiley-Interscience, New York, NY 10158
6. Danielson, MJ & SG Pitman, 2000, *Corrosion Tests of 316L and Hastelloy C-22 in Simulated Tank Waste Solutions*, PNWD-3015 (BNFL-RPT-019, Rev 0), Pacific Northwest Laboratory, Richland WA
7. Davis, JR (Ed), 1987, *Corrosion, Vol 13*, In "Metals Handbook", ASM International, Metals Park, OH 44073
8. Davis, JR (Ed), 1994, *Stainless Steels*, In ASM Metals Handbook, ASM International, Metals Park, OH 44073
9. Hamner, NE, 1981, *Corrosion Data Survey*, Metals Section, 5th Ed, NACE International, Houston, TX
10. Koch, GH, 1995, *Localized Corrosion in Halides Other Than Chlorides*, MTI Pub No. 41, Materials Technology Institute of the Chemical Process Industries, Inc, St Louis, MO 63141
11. Ohl, PC & WC Carlos, 1994, *Hanford High-Level Evaporator/Crystallizer Corrosion Evaluation*, Presented at Corrosion 94, NACE International, Houston TX 77218
12. Revie, WW, 2000, *Uhlig's Corrosion Handbook*, 2nd Edition, Wiley-Interscience, New York, NY 10158
13. Sedriks, AJ, 1996, *Corrosion of Stainless Steels*, John Wiley & Sons, Inc., New York, NY 10158
14. Uhlig, HH, 1948, *Corrosion Handbook*, John Wiley & Sons, New York, NY 10158
15. Wilding, MW and BE Paige, 1976, *Survey on Corrosion of Metals and Alloys in Solutions Containing Nitric Acid*, ICP-1107, Idaho National Engineering Laboratory, Idaho Falls, ID
16. Zapp, PE, 1998, *Preliminary Assessment of Evaporator Materials of Construction*, BNF—003-98-0029, Rev 0, Westinghouse Savannah River Co., Inc for BNFL Inc.

Bibliography:

1. CCN 130170, Blackburn, LD to PG Johnson, Internal Memo, Westinghouse Hanford Co, *Evaluation of 240-AR Chloride Limit*, August 15, 1991.
2. CCN 130171, Ohl, PC to PG Johnson, Internal Memo, Westinghouse Hanford Co, *Technical Bases for Cl- and pH Limits for Liquid Waste Tank Cars*, MA: PCO:90/01, January 16, 1990
3. Jones, RH (Ed.), 1992, *Stress-Corrosion Cracking*, ASM International, Metals Park, OH 44073
4. Phull, BS, WL Mathay, & RW Ross, 2000, *Corrosion Resistance of Duplex and 4-6% Mo-Containing Stainless Steels in FGD Scrubber Absorber Slurry Environments*, Presented at Corrosion 2000, Orlando, FL, March 26-31, 2000, NACE International, Houston TX 77218
5. Van Delinder, LS (Ed), 1984, *Corrosion Basics*, NACE International, Houston, TX 77084

PLANT ITEM MATERIAL SELECTION DATA SHEET

24590-WTP-RPT-PR-04-0001, Rev. B
WTP Process Corrosion Data

PROCESS CORROSION DATA SHEET

Component(s) (Name/ID #) Waste feed evaporator separator (TLP-SEP-00001)
Treated LAW evaporator reboiler (TLP-RBLR-00001)

Facility PTF

In Black Cell? Yes (TLP-SEP-00001 only)

Chemicals	Unit[1]	Contract Maximum		Non-Routine		Notes
		Leach	No leach	Leach	No Leach	
Aluminum	g/l	3.85E+01	3.52E+01			
Chloride	g/l	1.83E+01	2.00E+01			
Fluoride	g/l	1.84E+01	2.01E+01			
Iron	g/l	2.83E+00	2.89E+00			
Nitrate	g/l	2.72E+02	2.88E+02			
Nitrite	g/l	8.19E+01	8.89E+01			
Phosphate	g/l	5.91E+01	6.28E+01			
Sulfate	g/l	3.15E+01	3.42E+01			
Mercury	g/l	8.96E-01	3.14E-02			
Carbonate	g/l	1.27E+02	1.10E+02			
Undissolved solids	wt%					
Other	g/l					
Other	g/l					
pH	N/A					Note 3
Temperature	°F					Note 2

List of Organic Species:

References
System Description: 24590-PTF-3YD-TLP-00001, Rev 0
Mass Balance Document: 24590-WTP-M4C-V11T-00005, Rev A
Normal Input Stream #: TLP13, TLP02, CXP23
Off Normal Input Stream # (e.g., overflow from other vessels): FRP03, UFP08
P&ID: 24590-PTF-M6-TLP-P0003, Rev 0
PFD: 24590-PTF-M5-V17T-P0005, Rev 0
Technical Reports:

Notes:
1. Concentrations less than 1x 10^{-4} g/l do not need to be reported; list values to two significant digits max.
2. T normal operation 122 °F (24590-PTF-MVC-TLP-00002, Rev B)
3. pH approximately 12 to 14

Assumptions:

PLANT ITEM MATERIAL SELECTION DATA SHEET

4.13.3 Treated LAW Evaporator Separator Vessel (TLP-SEP-00001)

Routine Operations

When the recirculating liquor reaches the separator vessel, flash evaporation occurs due to reduced pressure in the vessel. The liquid continues to flash, separating the vapor and liquid streams. The liquid stream recirculates in this closed loop while the vapor stream enters the evaporator overheads. The maximum designed boil-off rate for the TLP evaporator system will be 30 gpm of vapor condensate.

The pressure in the separator vessel is maintained at about 1 psia by a controlled in-bleed of air to the suction side of the primary vacuum ejector. This reduced pressure lowers the boiling point of the liquor to about 122 °F. If the pressure in the separator vessel rises, the air in-bleed is reduced to allow a higher rate of vapor to be withdrawn from the separator vessel, thereby reducing the pressure.

The overhead vapor produced in the separator vessel is superheated by about 24 °F due to the boiling point elevation of the concentrate. The overhead vapor is passed through a set of demister pads for de-entrainment purposes. The demister pads are sprayed with recycled condensate from the treated LAW evaporator condensate vessel, or in the event that evaporator condensate is unavailable, the process condensate tanks (RLD-TK-00006A/B). This spray ensures that the demister pads are always wetted completely to mitigate solids formation and plugging. This also diminishes solids formation on the walls of the separator above the liquid level in the vessel.

The nature of the evaporator feed, coupled with the boiling action, creates the potential for foaming in the separator vessel (TLP-SEP-00001). The separator vessel design includes an antifoam agent feed line from the antifoam vessel. The need for, and magnitude of, the antifoam addition will be determined by development and commissioning work. This addition is expected to be part of normal operations.

The treated LAW evaporator will concentrate the waste to between 8 and 10 M sodium or a maximum specific gravity of approximately 1.44. Concentrate is removed continuously from the treated LAW evaporator at the lowest point on the suction side of the recirculation pump using the variable-speed evaporator concentrate pumps (TLP-PMP-00011A/B).

While in operation, the evaporator train provides sufficient vapor space dilution to prevent the build-up of hydrogen.

For purposes of decontamination, the separator vessel is equipped with wash rings.

Non-Routine Operations that Could Affect Corrosion/Erosion

None identified.

PLANT ITEM MATERIAL SELECTION DATA SHEET

R10684975

TLP-VSL-00002 (PTF)
Treated LAW Evaporator Condensate Vessel

- Design Temperature (°F)(max/min): 150/49
- Design Pressure (psig): 15
- Location: outcell

ISSUED BY
RPP-WTP PDC

Contents of this document are Dangerous Waste Permit affecting

Operating conditions are as stated on attached Process Corrosion Data Sheet

Options Considered:

- Normal operating conditions
- Acid cleaning at normal temperature

Materials Considered:

Material (UNS No.)	Relative Cost	Acceptable Material	Unacceptable Material
Carbon Steel	0.23		X
304L (S30403)	1.00	X	
316L (S31603)	1.18	X	
6% Mo (N08367/N08926)	7.64	X	
Alloy 22 (N06022)	11.4	X	
Ti-2 (R50400)	10.1		X

Recommended Material: 304 (max 0.030% C; dual certified)

Recommended Corrosion Allowance: 0.040 inch (includes 0.024 inch corrosion allowance and 0.004 inch erosion allowance)

Process & Operations Limitations:

- Develop rinsing/flushing procedure for acid and water

STEVEN WAKEMAN VAIL
STATE OF WASHINGTON
39250
REGISTERED
PROFESSIONAL ENGINEER
6/13/06
EXPIRES: 12/07/07

Please note that source, special nuclear and byproduct materials, as defined in the Atomic Energy Act of 1954 (AEA), are regulated at the U.S. Department of Energy (DOE) facilities exclusively by DOE acting pursuant to its AEA authority. DOE asserts, that pursuant to the AEA, it has sole and exclusive responsibility and authority to regulate source, special nuclear, and byproduct materials at DOE-owned nuclear facilities. Information contained herein on radionuclides is provided for process description purposes only.

This bound document contains a total of 6 sheets.

REV	DATE	REASON FOR REVISION	PREPARER	CHECKER	APPROVER
1	6/13/06	Issued for Permitting Use		HMK	
0	3/24/04	Issued for Permitting Use	DLA	JRD	APR

PLANT ITEM MATERIAL SELECTION DATA SHEET

Corrosion Considerations:

Vessel receives condensate from the condensers and demister vessel.

a General Corrosion
At the stated pH, temperature and halide concentrations, the corrosion rates will be small. Davis (1994) states the corrosion rate for 304L in pure NaOH will be less than about 1 mpy up to the proposed operating temperatures.

Conclusion:
At the normal operating temperature, either 304L or 316L will be sufficiently resistant to the waste solution with a probable general corrosion rate of less than 1 mpy. Based on the Savannah River experience with Hanford-like waste at higher temperatures, 304L is expected to be satisfactory to 300 °F.

b Pitting Corrosion
Pitting should not be a concern for 304L or 316L at the stated low-chloride conditions and stated temperature.

Conclusion:
Under normal conditions, 304L is expected to be satisfactory.

c End Grain Corrosion
End grain corrosion only occurs in metal with exposed end grains and in highly oxidizing acid conditions.

Conclusion:
Not applicable to this system.

d Stress Corrosion Cracking
The exact amount of chloride required to cause stress corrosion cracking is unknown. In part this is because the amount varies with temperature, metal sensitization, and the environment. But it is also unknown because chloride tends to concentrate under heat transfer conditions, by evaporation, and electrochemically during a corrosion process. Hence, even as little as 10 ppm can lead to cracking under some conditions. Generally, as seen in Sedriks (1996) and Davis (1987), stress corrosion cracking does not usually occur below about 140 °F. However, Zapp's work (1998) indicates that with the high pH, cracking would be expected to occur only at temperatures well above the design temperature.

Conclusion:
With the stated normal operating conditions, 300 series stainless steels are expected to be acceptable.

e Crevice Corrosion
For the most part, the pitting discussion covers this area. It is assumed that the fluids will not be stagnant and no deposits are anticipated.

Conclusion:
See Pitting

f Corrosion at Welds
Corrosion at welds is not considered a problem in the proposed environment.

Conclusion:
Weld corrosion is not considered a problem for this system.

g Microbiologically Induced Corrosion (MIC)
The proposed operating temperatures are acceptable for microbial growth but the location of the vessel in the process suggests little chance of the introduction of microbes.

Conclusion:
MIC is not expected to be a problem.

PLANT ITEM MATERIAL SELECTION DATA SHEET

h Fatigue/Corrosion Fatigue
Corrosion fatigue is not expected to be a problem in this vessel.

Conclusions:
Not considered to be a problem.

i Vapor Phase Corrosion
The vapor phase portion of the vessel will be spattered with solution and pitting or crevice corrosion may be a concern but wash rings are available for rinsing.

Conclusion:
Not considered to be a problem.

j Erosion
Velocities are expected to be low. Erosion allowance of 0.004 inch for components with low solids content (< 2 wt%) at low velocities is based on 24590-WTP-RPT-M-04-0008.

Conclusion:
Not expected to be a concern.

k Galling of Moving Surfaces
Not applicable.

Conclusion:
Not applicable.

l Fretting/Wear
Not expected to be applicable.

Conclusion:
Not a concern.

m Galvanic Corrosion
For the environment and the proposed alloys, there is not believed to be a concern.

Conclusion:
Not a concern.

n Cavitation
None expected.

Conclusion:
Not believed to be of concern.

o Creep
The temperatures are too low to be a concern.

Conclusion:
Not applicable.

p Inadvertent Nitric Acid Addition
Higher chloride contents and higher temperatures usually require higher alloy materials. Nitrate ions inhibit the pitting and crevice corrosion of stainless alloys. Furthermore, nitric acid passivates these alloys; therefore, lower pH values brought about by increases in the nitric acid content of process fluid will not cause higher corrosion rates for these alloys. The upset condition that was most likely to occur is lowering of the pH of the vessel content by inadvertent addition of 0.5 M nitric acid. Lowering of pH may make a chloride-containing solution more likely to cause pitting of stainless alloys. Increasing the nitric acid content of the process fluid adds more of the pitting-inhibiting nitrate ion to the process fluid. In addition, adding the nitric acid solution to the stream will dilute the chloride content of the process fluid.

Conclusion:
The recommended materials will be able to withstand a plausible inadvertent addition of 0.5 M nitric acid for a limited period.

PLANT ITEM MATERIAL SELECTION DATA SHEET

References:

1. 24590-WTP-RPT-M-04-0008, Rev. 2, *Evaluation Of Stainless Steel Wear Rates In WTP Waste Streams At Low Velocities*
2. 24590-WTP-RPT-PR-04-0001, Rev. B, *WTP Process Corrosion Data*
3. 24590-QL-POA-MEVV-00001-14-00002, *Information - 60% Design - Equipment Design Condition*
4. Davis, JR (Ed), 1987, *Corrosion, Vol 13*, In "Metals Handbook", ASM International, Metals Park, OH 44073
5. Davis, JR (Ed), 1994, *Stainless Steels*, In ASM Metals Handbook, ASM International, Metals Park, OH 44073
6. Sedriks, AJ, 1996, *Corrosion of Stainless Steels*, John Wiley & Sons, Inc., New York, NY 10158
7. Zapp, PE, 1998, *Preliminary Assessment of Evaporator Materials of Construction*, BNF—003-98-0029, Rev 0, Westinghouse Savannah River Co., Inc for BNFL Inc.

Bibliography:

1. CCN 130170, Blackburn, LD to PG Johnson, Internal Memo, Westinghouse Hanford Co, *Evaluation of 240-AR Chloride Limit*, August 15, 1991.
2. CCN 130171, Ohl, PC to PG Johnson, Internal Memo, Westinghouse Hanford Co, *Technical Bases for Cl- and pH Limits for Liquid Waste Tank Cars*, MA: PCO:90/01, January 16, 1990.
3. CCN 130172, Divine, JR, 1986, Letter to A.J. Diliberto, *Reports of Experimentation*, Battelle, Pacific Northwest Laboratories, Richland, WA 99352
4. CCN 130173, Dillon, CP (Nickel Development Institute), Personal Communication to J R Divine (ChemMet, Ltd., PC), 3 Feb 2000.
5. Agarwal, DC, *Nickel and Nickel Alloys*, In: Revie, WW, 2000. *Uhlig's Corrosion Handbook*, 2nd Edition, Wiley-Interscience, New York, NY 10158
6. Danielson, MJ & SG Pitman, 2000, *Corrosion Tests of 316L and Hastelloy C-22 in Simulated Tank Waste Solutions*, PNWD-3015 (BNFL-RPT-019, Rev 0), Pacific Northwest Laboratory, Richland WA
7. Hamner, NE, 1981, *Corrosion Data Survey*, Metals Section, 5th Ed, NACE International, Houston, TX
8. Jones, RH (Ed.), 1992, *Stress-Corrosion Cracking*, ASM International, Metals Park, OH 44073
9. Koch, GH, 1995, *Localized Corrosion in Halides Other Than Chlorides*, MTI Pub No. 41, Materials Technology Institute of the Chemical Process Industries, Inc, St Louis, MO 63141
10. Phull, BS, WL Mathay, & RW Ross, 2000, *Corrosion Resistance of Duplex and 4-6% Mo-Containing Stainless Steels in FGD Scrubber Absorber Slurry Environments*, Presented at Corrosion 2000, Orlando, FL, March 26-31, 2000, NACE International, Houston TX 77218
11. Uhlig, HH, 1948, *Corrosion Handbook*, John Wiley & Sons, New York, NY 10158
12. Van Delinder, LS (Ed), 1984, *Corrosion Basics*, NACE International, Houston, TX 77084
13. Wilding, MW & BE Paige, 1976, *Survey on Corrosion of Metals and Alloys in Solutions Containing Nitric Acid*, ICP-1107, Idaho National Engineering Laboratory, Idaho Falls, ID

PLANT ITEM MATERIAL SELECTION DATA SHEET

24590-WTP-RPT-PR-04-0001, Rev. B
WTP Process Corrosion Data

PROCESS CORROSION DATA SHEET

Component(s) (Name/ID #) Treated LAW evaporator condensate vessel (TLP-VSL-00002)

Facility PTF

In Black Cell? No

Chemicals	Unit[1]	Contract Maximum		Non-Routine		Notes
		Leach	No leach	Leach	No Leach	
Aluminum	g/l	3.1E-02	3.3E-02			
Chloride	g/l	4.2E-02	5.4E-02			
Fluoride	g/l	9.2E-04	1.2E-03			
Iron	g/l	3.4E-03	4.1E-03			
Nitrate	g/l	5.7E-01	7.1E-01			
Nitrite	g/l	4.1E-02	5.2E-02			
Phosphate	g/l	7.1E-02	8.9E-02			
Sulfate	g/l	2.7E-02	3.4E-02			
Mercury	g/l	4.5E-04				
Carbonate	g/l	1.3E-01	1.6E-01			
Undissolved solids	wt%					
Other (NaMnO4, Pb,...)	g/l					
Other	g/l					
pH	N/A					Note 3
Temperature	°F					Note 2

List of Organic Species:

References

System Description: 24590-PTF-3YD-TLP-00001, Rev 0
Mass Balance Document: 24590-WTP-M4C-V11T-00005, Rev A
Normal Input Stream #: TLP03
Off Normal Input Stream # (e.g., overflow from other vessels): FRP03, UFP08
P&ID: 24590-PTF-M6-TLP-P0002, Rev 0
PFD: 24590-PTF-M5-V17T-P0005, Rev 0
Technical Reports:

Notes:

1. Concentrations less than 1x 10^{-4} g/l do not need to be reported; list values to two significant digits max.
2. T normal operation 68 °F to 167 °F (24590-PTF-MVC-TLP-00002, Rev B)
3. pH approximately 11 to 12

Assumptions:

Note: Vendor submittal (24590-QL-POA-MEVV-00001-14-00002, Rev. 00C) updates operating temperature. Normal operating temperature is 104 °F.

4.13.4 Treated LAW Evaporator Condensate Vessel (TLP-VSL-00002)

Routine Operations

Condensate from the condensers and demister vessel all drain to a common condensate vessel, TLP-VSL-00002. As the condensate vessel fills, the treated LAW evaporator condensate pump recirculates condensate continuously back to the vessel with a portion recycled to the separator vessel for spraying the de-entrainment pads. When the condensate vessel is filled to its high level setpoint, the condensate is directed to the clean condensate tank RLD-TK-00006A/B.

The condensate draining from the primary condenser is monitored for radioactivity. The radiation monitor is located close to the condenser condensate outlet to allow a time lag before any contaminated condensate can reach the condensate vessel. This minimizes the possibility that contaminated condensate can be transferred to system RLD. In the event that the radiation monitor detects high activity, the evaporator is placed into reflux state and the condensate vessel is isolated so that a sample may be retrieved. A manual sampling point is located on the discharge side of the condensate pump. If the condensate is contaminated, it is redirected to the LAW SBS condensate receipt vessels (TLP-VSL-00009A/B) via valving and an evaporator shutdown can be initiated if necessary.

The vessel vent system draws air into the vapor space of the condensate vessel while removing gases. Vacuum control air is withdrawn from the system PVP vessel vent header. The condensate vessel overflows to PWD-VSL-00033.

Non-Routine Operations that Could Affect Corrosion/Erosion

None identified.

PLANT ITEM MATERIAL SELECTION DATA SHEET

R10684976

TLP-RBLR-00001 (PTF)
Treated LAW Evaporator Reboiler

- Design Temperature (°F) (max/min): Shell side: 275/49; Tube side: 175/49
- Design Pressure (psig) (max/min): Shell side: 50/FV; Tube side: 50/FV
- Location: incell

ISSUED BY
RPP-WTP PDC

Contents of this document are Dangerous Waste Permit affecting

Operating conditions are as stated on attached Process Corrosion Data Sheet

Options Considered:

- pH between 12 and 14; halide concentrations similar to TLP-SEP-00001; operating temperature 122 °F

Materials Considered:

Material (UNS No.)	Acceptable Material	Unacceptable Material
Carbon Steel		X
304L (S30403)	X	
316L (S31603)	X	
6% Mo (N08367/N08926)	X	
Alloy G-30 (N06030	X (heat exchange surfaces)	
Alloy 22 (N06022)	X	
Ti-2 (R50400)		X

Recommended Material: Shell: 304 (max 0.030% C; dual certified)
Tubes and related heated surfaces: N06030 (G-30 or equivalent)

Recommended Corrosion Allowance: Tube side: 0.04 inch (includes 0.024 inch corrosion allowance and 0.004 inch erosion allowance)
Shell side: 0.0 inch

Process & Operations Limitations:

- Develop flushing/rinsing procedure for acid or water

STEVEN WAKEMAN VAIL
STATE OF WASHINGTON
39250
REGISTERED PROFESSIONAL ENGINEER
EXPIRES: 12/07/07

6/13/06

Please note that source, special nuclear and byproduct materials, as defined in the Atomic Energy Act of 1954 (AEA), are regulated at the U.S. Department of Energy (DOE) facilities exclusively by DOE acting pursuant to its AEA authority. DOE asserts, that pursuant to the AEA, it has sole and exclusive responsibility and authority to regulate source, special nuclear, and byproduct materials at DOE-owned nuclear facilities. Information contained herein on radionuclides is provided for process description purposes only.

This bound document contains a total of 7 sheets.

REV	DATE	REASON FOR REVISION	PREPARER	CHECKER	APPROVER
1	6/13/06	Issued for Permitting Use		HMK	
0	3/25/04	Issued for Permitting Use	DLA	JRD	APR

PLANT ITEM MATERIAL SELECTION DATA SHEET

Corrosion Considerations:

a General Corrosion
Hamner's data (1981), 304 (and 304L) lists a corrosion rate in NaOH of less than 20 mpy (500 μm/y) at 77°F and over 20 mpy at 122°F. He shows 316 (and 316L) has a rate of less than 2 mpy up to 122°F and 50% NaOH. Dillon (2000) and Sedriks (1996) both state that the 300 series stainless steels are acceptable in up to 50% NaOH at temperatures up to about 122°F or slightly above. Divine's work (1986) with simulated-radwaste evaporators, six months at 140°F, showed 304L was slightly more resistant to corrosion (<0.2 mpy) than was 316L (<0.6 mpy); Ni 200, pure nickel, was much less resistant (≈7 mpy) probably due to the complexants.

Davis (1994) states the corrosion rate for 304L in pure NaOH will be less than about 0.1 mpy up to about 212°F though Sedriks states the data above 122°F are incorrect. Danielson & Pitman (2000), based on short-term studies, suggest a corrosion rate of about 0.5 mpy for 316L in simulated waste at boiling.

Ohl & Carlos (1994) found, in their review of the 242-A Evaporator with waste similar to that expected in LAW, the corrosion of 304L was less than the accepted variability of the plate thickness after two years of operation at 140°F. Because of uncertainties of the starting wall thickness, a review of the raw data was inconclusive. 304L appears have corroded at an average rate of about 10 mpy though it may have been higher or lower.

Uhlig (1948) has shown that pure nickel is more resistant to corrosion by NaOH than stainless steel. However, as Divine (1986) pointed out, the presence of complexing agents may reverse the trend. Agarwal (2000) states that the higher nickel alloys, such as C-22 and G-30, are highly corrosion resistant though specific mention of alkaline media is not made. The general literature mainly discusses cracking problems (see below) rather than uniform corrosion.

Zapp (1998) notes that the evaporator vessels at Savannah River Site are made of 304L and have suffered no failures in over 30 years of operation. Savannah River uses G-3 and G-30 alloys for the evaporator tubes.

The shell side, however, will see only steam and 304L is satisfactory.

Conclusion:
For the shell, it appears that 304L is acceptable.

b Pitting Corrosion
Chloride is notorious for causing pitting in acid and neutral solutions. Dillon (2000) is of the opinion that in alkaline solutions, pH>12, chlorides are likely to promote pitting only in tight crevices. Dillon and Koch (1995) are of the opinion that fluoride will have little effect. Jenkins (1998) has stated that localized corrosion can occur under the deposits on tubes, probably due to the chlorides.

Revie (2000) and Uhlig (1948) note that nitrate inhibits chloride corrosion. Therefore, the high nitrate concentrations in the LAW are expected to be beneficial.

The apparent lack of pitting in the 242-A Evaporator suggests 304L is acceptable at the design conditions. Zapp (1998) confirms the behavior of 304L in the shell. Use of austenitic alloys is not recommended for the tubes.

Based on tests performed by Divine (1986), 304L would be satisfactory for the tubes. However, if it is assumed the temperature can approach low pressure steam temperatures, then, based on Savannah River data, a higher alloy is recommended for the tubes. Some of the data described above suggest that a high chromium and perhaps molybdenum content will be needed. G-30 alloy, based on the current Savannah River experience, can be selected.

The higher nickel and molybdenum alloys are expected to be more pitting resistant than the austenitic alloys. Because high purity nickel, Ni 200, did not fare well in Divine's tests (1986) in the presence of complexants, but the chromium content of the alloys may mitigate that effect. Jenkins (1998) reports that G3 and G30 evaporator tubes have been used successfully at Savannah River Site for over 10 years and they expect at least 20 years service while 304L had failed after about 10 years. The shell of the evaporator has performed successfully for approximately 30 years.

Conclusion:
Localized corrosion, such as pitting, is common but probably can be mitigated by alloys with higher nickel and molybdenum contents even under heat transfer conditions or where deposits can form. Based on Savannah River data, the shell is expected to be free of significant corrosion and can be 304L.

c End Grain Corrosion
End grain corrosion only occurs in metal with exposed end grains and in highly oxidizing acid conditions.

Conclusion:
Not applicable to this system.

PLANT ITEM MATERIAL SELECTION DATA SHEET

d Stress Corrosion Cracking
The exact amount of chloride required to stress corrosion crack stainless steel is unknown. In part, this is because the amount varies with temperature, metal sensitization, and the environment. But it is also unknown because chloride tends to concentrate under heat transfer conditions, by evaporation, and electrochemically during a corrosion process. Hence, even as little as 10 ppm can lead to cracking under some conditions. Generally, as seen in Sedriks (1996) and Davis (1987), stress corrosion cracking does not usually occur below about 140°F. Further, the use of "L" grade stainless reduces the opportunity for sensitization. From the above references, it also observed that alkaline conditions reduce the probability of the initiation of stress corrosion cracking to essentially zero. However, should a pit or crevice, including a deposit, be present where the environment can become acid, then the alkaline environment will no longer have an effect and stress corrosion can occur.

Caustic cracking tends to occur below 140°F (Sedriks 1996; Dillon, 2000) or below 212°F (Zapp 1998). Because the normal operating temperature is below 140°F, all sources suggest caustic cracking should be minimal. Zapp's data from the Savannah River Site evaporators is auspicious for the use of 304L for the shell. If the 140°F temperature is exceeded, such as on the evaporator tubes, higher alloys are needed.

Conclusion:
The use of 304L is expected to be acceptable for the shell at the stated operating temperature. The tubes should be a higher alloy, such as G-30.

e Crevice Corrosion
See Pitting.

Conclusion:
See Pitting

f Corrosion at Welds
Weld corrosion is not considered a problem in the proposed environment.

Conclusion:
Weld corrosion is not considered a problem for this system.

g Microbiologically Induced Corrosion (MIC)
MIC is normally observed at lower pH conditions and temperatures. Although microbes can live at very low pH, and probably high pH, as well as at 572°F and in radiation fields, no reports of MIC in the proposed conditions have been reported.

Conclusion:
MIC is not considered a problem.

h Fatigue/Corrosion Fatigue
Corrosion fatigue is not considered a problem.

Conclusions:
Not a concern.

i Vapor Phase Corrosion
The vapor phase portion of the tank will be continually washed with condensing vapors and periodically sprayed with wash water via the vessel wash rings while also being spattered with caustic.

Conclusion:
Based on Zapp's work (1998), no vapor phase corrosion is anticipated.

j Erosion
Velocities within the reboiler are expected to be low. Erosion allowance of 0.004 inch for components with low solids content (< 2 wt%) at low velocities is based on 24590-WTP-RPT-M-04-0008.

Conclusion:
Not a concern.

k Galling of Moving Surfaces
Not applicable.

Conclusion:
Not applicable.

PLANT ITEM MATERIAL SELECTION DATA SHEET

l Fretting/Wear
Not anticipated to be a problem.

Conclusion:
Not expected to be a concern.

m Galvanic Corrosion
For the environment and the proposed alloys, none expected.

Conclusion:
Not a concern.

n Cavitation
Not applicable.

Conclusion:
Not applicable.

o Creep
Not a concern at the given temperatures and at the given pressures.

Conclusion:
Not applicable.

p Inadvertent Addition of Nitric Acid
Higher chloride contents and higher temperatures usually require higher alloy materials. Nitrate ions inhibit the pitting and crevice corrosion of stainless alloys. Furthermore, nitric acid passivates these alloys; therefore, lower pH values brought about by increases in the nitric acid content of process fluid will not cause higher corrosion rates for these alloys. The upset condition that was most likely to occur is lowering of the pH of the vessel content by inadvertent addition of 0.5 M nitric acid. Lowering of pH may make a chloride-containing solution more likely to cause pitting of stainless alloys. Increasing the nitric acid content of the process fluid adds more of the pitting-inhibiting nitrate ion to the process fluid. In addition, adding the nitric acid solution to the stream will dilute the chloride content of the process fluid.

Conclusion:
The recommended materials will be able to withstand a plausible inadvertent addition of 0.5 M nitric acid for a limited period.

PLANT ITEM MATERIAL SELECTION DATA SHEET

References:

1. 24590-WTP-RPT-M-04-0008, Rev. 2, *Evaluation Of Stainless Steel Wear Rates In WTP Waste Streams At Low Velocities*
2. 24590-WTP-RPT-PR-04-0001, Rev. B, *WTP Process Corrosion Data*
3. CCN 130172, Divine, JR, 1986, Letter to A.J. Diliberto, *Reports of Experimentation*, Battelle, Pacific Northwest Laboratories, Richland, WA 99352
4. CCN 130173, Dillon, CP (Nickel Development Institute), Personal Communication to J R Divine (ChemMet, Ltd., PC), 3 Feb 2000.
5. Agarwal, DC, *Nickel and Nickel Alloys*, In: Revie, WW, 2000. *Uhlig's Corrosion Handbook*, 2nd Edition, Wiley-Interscience, New York, NY 10158
6. Danielson, MJ & SG Pitman, 2000, *Corrosion Tests of 316L and Hastelloy C-22 in Simulated Tank Waste Solutions*, PNWD-3015 (BNFL-RPT-019, Rev 0), Pacific Northwest Laboratory, Richland WA.
7. Davis, JR (Ed), 1987, *Corrosion, Vol 13*, In "Metals Handbook", ASM International, Metals Park, OH 44073
8. Davis, JR (Ed), 1994, *Stainless Steels*, In ASM Metals Handbook, ASM International, Metals Park, OH 44073
9. Hamner, NE, 1981, *Corrosion Data Survey*, Metals Section, 5th Ed, NACE International, Houston, TX
10. Jenkins, CF, 1998, *Performance of Evaporators in High Level Radioactive Chemical Waste Service*, Presented at Corrosion 98, NACE International, Houston TX 77084
11. Koch, GH, 1995, *Localized Corrosion in Halides Other Than Chlorides*, MTI Pub No. 41, Materials Technology Institute of the Chemical Process Industries, Inc, St Louis, MO 63141
12. Ohl, PC & WC Carlos, 1994, *Hanford High-Level Evaporator/Crystallizer Corrosion Evaluation*, Presented at Corrosion 94, NACE International, Houston TX 77218
13. Revie, WW, 2000. *Uhlig's Corrosion Handbook*, 2nd Edition, Wiley-Interscience, New York, NY 10158
14. Sedriks, AJ, 1996, *Corrosion of Stainless Steels*, John Wiley & Sons, Inc., New York, NY 10158
15. Uhlig, HH, 1948, *Corrosion Handbook*, John Wiley & Sons, New York, NY 10158
16. Zapp, PE, 1998, *Preliminary Assessment of Evaporator Materials of Construction*, BNF—003-98-0029, Rev 0, Westinghouse Savannah River Co., Inc for BNFL Inc.

Bibliography:

1. CCN 130170, Blackburn, LD to PG Johnson, Internal Memo, Westinghouse Hanford Co, *Evaluation of 240-AR Chloride Limit*, August 15, 1991.
2. CCN 130171, Ohl, PC to PG Johnson, Internal Memo, Westinghouse Hanford Co, *Technical Bases for Cl- and pH Limits for Liquid Waste Tank Cars*, MA: PCO:90/01, January 16, 1990.
3. Jones, RH (Ed.), 1992, *Stress-Corrosion Cracking*, ASM International, Metals Park, OH 44073
4. Smith, HD and MR Elmore, 1992, *Corrosion Studies of Carbon Steel under Impinging Jets of Simulated Slurries of Neutralized Current Acid Waste (NCAW) and Neutralized Cladding Removal Waste (NCRW)*, PNL-7816, Pacific Northwest Laboratory, Richland, Washington.
5. Van Delinder, LS (Ed), 1984, *Corrosion Basics*, NACE International, Houston, TX 77084

PLANT ITEM MATERIAL SELECTION DATA SHEET

24590-WTP-RPT-PR-04-0001, Rev. B
WTP Process Corrosion Data

PROCESS CORROSION DATA SHEET

Component(s) (Name/ID #) Waste feed evaporator separator (TLP-SEP-00001)
Treated LAW evaporator reboiler (TLP-RBLR-00001)

Facility PTF

In Black Cell? Yes (TLP-SEP-00001 only)

Chemicals	Unit[1]	Contract Maximum		Non-Routine		Notes
		Leach	No leach	Leach	No Leach	
Aluminum	g/l	3.85E+01	3.52E+01			
Chloride	g/l	1.83E+01	2.00E+01			
Fluoride	g/l	1.84E+01	2.01E+01			
Iron	g/l	2.83E+00	2.89E+00			
Nitrate	g/l	2.72E+02	2.88E+02			
Nitrite	g/l	8.19E+01	8.89E+01			
Phosphate	g/l	5.91E+01	6.28E+01			
Sulfate	g/l	3.15E+01	3.42E+01			
Mercury	g/l	8 96E-01	3.14E-02			
Carbonate	g/l	1 27E+02	1.10E+02			
Undissolved solids	wt%					
Other	g/l					
Other	g/l					
pH	N/A					Note 3
Temperature	°F					Note 2

List of Organic Species:

References

System Description: 24590-PTF-3YD-TLP-00001, Rev 0
Mass Balance Document: 24590-WTP-M4C-V11T-00005, Rev A
Normal Input Stream #: TLP13, TLP02, CXP23
Off Normal Input Stream # (e.g., overflow from other vessels): FRP03, UFP08
P&ID: 24590-PTF-M6-TLP-P0003, Rev 0
PFD: 24590-PTF-M5-V17T-P0005, Rev 0
Technical Reports:

Notes:

1. Concentrations less than 1x 10^{-4} g/l do not need to be reported; list values to two significant digits max.
2. T normal operation 122 °F (24590-PTF-MVC-TLP-00002, Rev B)
3. pH approximately 12 to 14

Assumptions:

PLANT ITEM MATERIAL SELECTION DATA SHEET

4.13.2 Treated LAW Evaporator Reboiler (TLP-RBLR-00001)

Routine Operations

Two streams are fed into the treated LAW evaporator at the suction side of the recirculation pump (TLP-PMP-00001). First, the treated LAW is transferred from one of the three treated LAW collection vessels at a fixed flow rate. Second, the LAW SBS condensate/recycle stream is transferred from one of the LAW SBS vessels (TLP-VSL-00009A or B) using the variable-speed LAW SBS condensate feed pumps (TLP-PMP-00005A/B).

The recirculation pump moves the liquor through the evaporator recirculation loop maintaining a high flow rate through the evaporation system. First, the liquor is pumped through the treated LAW evaporator reboiler (TLP-RBLR-00001), which raises the temperature of the liquor. Recirculating liquor is prevented from boiling in the reboiler tubes by maintaining sufficient hydrostatic head to increase the boiling point above the temperature of the liquor in the reboiler. Low-pressure steam, modulated via a flow controller, will be used to heat the feed liquor to the selected system boil-off rate. Low-pressure steam is available at 40 psig and 286 °F, from the *Basis of Design* (24590-WTP-DB-ENG-01-001).

Non-Routine Operations that Could Affect Corrosion/Erosion

High solids in evaporator.

PLANT ITEM MATERIAL SELECTION DATA SHEET

R10591355

UFP-BRKPT-00001A/B (PTF)
Ultrafiltration Recycle Breakpot

- Design Temperature (°F)(max/min): 368/40
- Design Pressure (psig): 15
- Location: incell

ISSUED BY
RPP-WTP PDC

Contents of this document are Dangerous Waste Permit affecting

Operating conditions are as stated on sheets 5 and 6

Operating Modes Considered:

- The breakpot is normally empty and at ambient temperature. Steam temperatures during transfers will be of short duration.
- Vessel may see acid during vessel washing or during inadvertent transfers.

Materials Considered:

Material (UNS No.)	Relative Cost	Acceptable Material	Unacceptable Material
Carbon Steel	0.23		X
304L (S30403)	1.00		X
316L (S31603)	1.18	X	
6% Mo (N08367/N08926)	7.64	X	
Alloy 22 (N06022)	11.4	X	
Ti-2 (R50400)	10.1		X

Recommended Material: 316 (max 0.030% C; dual certified)

Recommended Corrosion Allowance: 0.040 inch (includes 0.024 inch corrosion allowance and 0.016 inch general allowance)

Process & Operations Limitations:

- Develop rinsing/flushing procedure for water and acid.

STEVEN WAKEMAN VAIL
STATE OF WASHINGTON
39250
REGISTERED
PROFESSIONAL ENGINEER
11/15/05
EXPIRES: 12/07/07

Please note that source, special nuclear and byproduct materials, as defined in the Atomic Energy Act of 1954 (AEA), are regulated at the U.S. Department of Energy (DOE) facilities exclusively by DOE acting pursuant to its AEA authority. DOE asserts, that pursuant to the AEA, it has sole and exclusive responsibility and authority to regulate source, special nuclear, and byproduct materials at DOE-owned nuclear facilities. Information contained herein on radionuclides is provided for process description purposes only.

This bound document contains a total of 6 sheets.

REV	DATE	REASON FOR REVISION	PREPARER	CHECKER	APPROVER
2	11/15/05	Issued for Permitting Use			
1	3/10/05	Issued for Permitting Use	DLA	JRD	APR
0	10/9/03	Issued for Permitting Use	DLA	JRD	SWV

PLANT ITEM MATERIAL SELECTION DATA SHEET

Corrosion Considerations:

Breakpot will routinely transfer the ultrafiltration feed vessel heel prior to ultrafilter cleaning.

a General Corrosion
Hamner (1981) lists a corrosion rate for 304 (and 304L) in NaOH of less than 20 mpy (500 μm/y) at 77°F and over 20 mpy at 122°F. He shows 316 (and 316L) has a rate of less than 2 mpy up to 122°F and 50% NaOH. Dillon (2000) and Sedriks (1996) both state that the 300 series are acceptable in up to 50% NaOH at temperatures up to about 122°F or slightly above. Divine's work (1986) with simulated-radwaste evaporators, six months at 140°F, showed 304L was slightly more resistant to corrosion (<0.2 mpy) than was 316L (<0.6 mpy); Ni 200, pure nickel, was much less resistant (≈7 mpy) probably due to the complexants. Zapp (1998) notes that the Savannah River evaporator vessels, operating at about 300°F, are made of 304L and have suffered no failures in about 30 years; 304L heat transfer surfaces have failed however after about 10 years.

Davis (1994) states the corrosion rate for 304L in pure NaOH will be less than about 0.1 mpy up to about 212°F though Sedriks (1996) states the data beyond about 122°F are incorrect. Danielson & Pitman (2000), based on short term studies, suggest a corrosion rate of about 0.5 mpy for 316L in simulated waste at boiling, >212°F.

Conclusion:
At temperatures less than about 140°F, 304L is expected to be sufficiently resistant to the waste solution with a probable general corrosion rate of less than 1 mpy. Based on the Savannah River experience with Hanford-like waste at higher temperatures, 304L is expected to be satisfactory to 300°F.

b Pitting Corrosion
Chloride is known to cause pitting in acid and neutral solutions. Dillon (2000) is of the opinion that in alkaline solutions, pH>12, chlorides are likely to promote pitting only in tight crevices. Dillon and Koch (1995) are both of the opinion that fluoride will have little effect in an alkaline media. Jenkins (1998) has stated that localized corrosion can occur under the deposits on heat transfer surfaces, probably due to the chlorides. Further, Revie (2000) and Uhlig (1948) note nitrate inhibits chloride pitting. Normally the vessel is to operate at 77°F. At the normal temperature, based on the work of Zapp (1989) and others, 304L stainless steel would be acceptable in the proposed alkaline conditions. If acid washes are anticipated, care should be taken to minimize the presence of deposits. 316L will provide greater protection against pitting.

Conclusion:
Based on the expected operating conditions, 304L is expected to be satisfactory. However, due to the possible presence of acid and high halide concentrations, 316L is recommended.

c End Grain Corrosion
End grain corrosion only occurs in metal with exposed end grains and in highly oxidizing acid conditions.

Conclusion:
Not likely in this system.

d Stress Corrosion Cracking
The exact amount of chloride required to stress corrosion crack stainless steel is unknown. In part this is because the amount varies with temperature, metal sensitization, and the environment. But it is also unknown because chloride tends to concentrate under heat transfer conditions, by evaporation, and electrochemically during a corrosion process. Hence, even as little as a few ppm can lead to cracking under some conditions. Generally, as seen in Sedriks (1996) and Davis (1987), stress corrosion cracking does not usually occur below about 140°F. Further, the use of "L" grade stainless reduces the opportunity for sensitization. Further, the presence of nitrate is expected to increase the limits slightly.

Conclusion:
For the normal operating conditions, the minimum alloy recommended is a 304L stainless steel.

e Crevice Corrosion
See Pitting.

Conclusion:
See Pitting

f Corrosion at Welds
Corrosion at welds is not considered a problem in the proposed environment.

Conclusion:
Not expected to be a concern.

PLANT ITEM MATERIAL SELECTION DATA SHEET

g Microbiologically Induced Corrosion (MIC)
The proposed operating conditions are not conducive to microbial growth – the temperature is approximately correct but the pH under normal operating conditions is too alkaline. Further, the system is sufficiently far downstream of the main entry points of microbes that infection is unlikely.

Conclusion:
MIC is not considered a problem.

h Fatigue/Corrosion Fatigue
Corrosion fatigue is a not expected to be a problem.

Conclusions
Not expected to be a concern.

i Vapor Phase Corrosion
The vapor phase portion of the vessel is expected to be contacted with particles of waste from splashing. A rinsing/flushing procedure will need to be developed to minimize the formation of deposits.

Conclusion:
Vapor phase corrosion is not a concern.

j Erosion
Velocities within the vessel are expected to be small. Based on 24590-WTP-RPT-M-04-0008, a general erosion allowance of 0.016 inch is adequate for components with solids content less than 27.3 wt%.

Conclusion:
Not a concern.

k Galling of Moving Surfaces
Not applicable.

Conclusion:
Not applicable.

l Fretting/Wear
No opportunity for fretting exists.

Conclusion:
Not considered a problem.

m Galvanic Corrosion
No dissimilar metals are present.

Conclusion:
Not applicable.

n Cavitation
None expected.

Conclusion:
Not believed to be of concern.

o Creep
The temperatures are too low to be a concern.

Conclusion:
Not applicable.

p Inadvertent Nitric Acid Addition
Higher chloride contents and higher temperatures usually require higher alloy materials. Nitrate ions inhibit the pitting and crevice corrosion of stainless alloys. Furthermore, nitric acid passivates these alloys; therefore, lower pH values brought about by increases in the nitric acid content of process fluid will not cause higher corrosion rates for these alloys. The upset condition that was most likely to occur is lowering of the pH of the vessel content by inadvertent addition of 0.5 M nitric acid. Lowering of pH may make a chloride-containing solution more likely to cause pitting of stainless alloys. Increasing the nitric acid content of the process fluid adds more of the pitting-inhibiting nitrate ion to the process fluid. In addition, adding the nitric acid solution to the stream will dilute the chloride content of the process fluid.

Conclusion:
The recommended materials will be able to withstand a plausible inadvertent addition of 0.5 M nitric acid for a limited period.

PLANT ITEM MATERIAL SELECTION DATA SHEET

References:

1. 24590-WTP-RPT-M-04-0008, Rev. 2, *Evaluation Of Stainless Steel Wear Rates In WTP Waste Streams At Low Velocities*
2. 24590-WTP-RPT-PR-04-0001, Rev. B, *WTP Process Corrosion Data*
3. CCN 130172, Divine, JR, 1986, Letter to A.J. Diliberto, *Reports of Experimentation*, Battelle, Pacific Northwest Laboratories, Richland, WA 99352
4. CCN 130173, Dillon, CP (Nickel Development Institute), Personal Communication to J R Divine (ChemMet, Ltd., PC), 3 Feb 2000.
5. Danielson, MJ & SG Pitman, 2000, *Corrosion Tests of 316L and Hastelloy C-22 in Simulated Tank Waste Solutions*, PNWD-3015 (BNFL-RPT-019, Rev 0), Pacific Northwest Laboratory, Richland WA.
6. Davis, JR (Ed), 1987, *Corrosion, Vol 13*, In "Metals Handbook", ASM International, Metals Park, OH 44073
7. Davis, JR (Ed), 1994, *Stainless Steels*, In ASM Metals Handbook, ASM International, Metals Park, OH 44073
8. Hamner, NE, 1981, *Corrosion Data Survey*, Metals Section, 5th Ed, NACE International, Houston, TX 77218
9. Jenkins, CF, 1998, *Performance of Evaporators in High Level Radioactive Chemical Waste Service*, Presented at Corrosion 98, NACE International, Houston TX 77084
10. Koch, GH, 1995, *Localized Corrosion in Halides Other Than Chlorides*, MTI Pub No. 41, Materials Technology Institute of the Chemical Process Industries, Inc, St Louis, MO 63141
11. Revie, WW, 2000. *Uhlig's Corrosion Handbook*, 2nd Edition, Wiley-Interscience, New York, NY 10158
12. Sedriks, AJ, 1996, *Corrosion of Stainless Steels*, John Wiley & Sons, Inc., New York, NY 10158
13. Uhlig, HH, 1948, *Corrosion Handbook*, John Wiley & Sons, New York, NY 10158
14. Zapp, PE, 1998, *Preliminary Assessment of Evaporator Materials of Construction*, BNF—003-98-0029, Rev 0, Westinghouse Savannah River Co., Inc for BNFL Inc.

Bibliography:

1. CCN 130170, Blackburn, LD to PG Johnson, Internal Memo, Westinghouse Hanford Co, *Evaluation of 240-AR Chloride Limit*, August 15, 1991.
2. CCN 130171, Ohl, PC to PG Johnson, Internal Memo, Westinghouse Hanford Co, *Technical Bases for Cl- and pH Limits for Liquid Waste Tank Cars*, MA: PCO:90/01, January 16, 1990.
3. Berhardsson, S, R Mellstrom, and J Oredsson, 1981, *Properties of Two Highly corrosion Resistant Duplex Stainless Steels*, Paper 124, presented at Corrosion 81, NACE International, Houston, TX 77218
4. Jones, RH (Ed.), 1992, *Stress-Corrosion Cracking*, ASM International, Metals Park, OH 44073
5. Phull, BS, WL Mathay, & RW Ross, 2000, *Corrosion Resistance of Duplex and 4-6% Mo-Containing Stainless Steels in FGD Scrubber Absorber Slurry Environments*, Presented at Corrosion 2000, Orlando, FL, March 26-31, 2000, NACE International, Houston TX 77218.
6. Van Delinder, LS (Ed), 1984, *Corrosion Basics*, NACE International, Houston, TX 77084
7. Wilding, MW and BE Paige, 1976, *Survey on Corrosion of Metals and Alloys in Solutions Containing Nitric Acid*, ICP-1107, Idaho National Engineering Laboratory, Idaho Falls, ID

PLANT ITEM MATERIAL SELECTION DATA SHEET

24590-WTP-RPT-PR-04-0001, Rev. B
WTP Process Corrosion Data

PROCESS CORROSION DATA SHEET

Component(s) (Name/ID #) Ultrafiltration recycle breakpot (UFP-BRKPT-00001A/B)

Facility PTF

In Black Cell? Yes

Chemicals	Unit[1]	Contract Maximum		Non-Routine (Note 3)		Notes
		Leach	No leach	Leach	No Leach	
Aluminum	g/l	3.61E+01	4.79E+01	3.61E+01	4.79E+01	
Chloride	g/l	1.20E+01	1.44E+01	1.20E+01	1.44E+01	
Fluoride	g/l	1.43E+01	1.72E+01	1.43E+01	1.72E+01	
Iron	g/l	1.69E+02	1.15E+02	1.69E+02	1.15E+02	
Nitrate	g/l	2.29E+02	2.63E+02	2.29E+02	2.63E+02	
Nitrite	g/l	6.66E+01	7.97E+01	6.66E+01	7.97E+01	
Phosphate	g/l	4.81E+01	5.63E+01	4.81E+01	5.63E+01	
Sulfate	g/l	2.56E+01	3.06E+01	2.56E+01	3.06E+01	
Mercury	g/l	1.18E+00	1.67E+00	1.18E+00	1.67E+00	
Carbonate	g/l	1.05E+02	1.06E+02	1.05E+02	1.06E+02	
Undissolved solids	wt%	25.00%	25.00%	25.00%	25.00%	
Other (NaMnO4, Pb,...)	g/l					
Other	g/l					
pH	N/A					
Temperature	°F					Note 2
						Note 4

List of Organic Species:

References

System Description: 24590-PTF-3YD-UFP-00001, Rev 0
Mass Balance Document: 24590-WTP-M4C-V11T-00005, Rev A
Normal Input Stream #: UFP38
Off Normal Input Stream # (e.g., overflow from other vessels): N/A
P&ID: 24590-PTF-M6-UFP-P0001, Rev 1
PFD: 24590-PTF-M5-V17T-P0009, Rev 0
Technical Reports :

Notes:

1. Concentrations less than 1×10^{-4} g/l do not need to be reported; list values to two significant digits max.
2. Steam is used for transfer. The breakpot is normally empty and at ambient temperature most of the time.
3. Same concentration during ultrafilter plugging as during normal cleaning operation.
4. Breakpot is used as radiation barrier and normally does not contain process fluid.

Assumptions:

PLANT ITEM MATERIAL SELECTION DATA SHEET

4.14.1 Ultrafiltration Recycle Breakpot (UFP-BRKPT-00001 A/B)

Routine Operations

Emptying the ultrafiltration feed vessel heel prior to ultrafilter cleaning.

Non-Routine Operations that Could Affect Corrosion/Erosion

Emptying the ultrafiltration feed vessel due to plugging of ultrafilters.

PLANT ITEM MATERIAL SELECTION DATA SHEET

R10682506

UFP-PP-00001A/B, 2A/B, 3A/B (PTF)
Ultrafilter Pulsepots

- Design Temperature (°F): 200
- Design Pressure (psig) (max/min): 200/-15
- Location: out cell

ISSUED BY
RPP-WTP PDC

Contents of this document are Dangerous Waste Permit affecting

Operating conditions are as stated on attached Process Corrosion Data Sheet

Operating Modes Considered:

- The vessels are always alkaline, pH > 12, at the normal operating temperature.
- Pulsepots will backpulse during cleaning operations with 2M nitric acid and 2M caustic.
- Process condensate will be supplied to flush reagents between uses.

Materials Considered:

Material (UNS No.)	Relative Cost	Acceptable Material	Unacceptable Material
Carbon Steel	0.23		X
304L (S30403)	1.00	X	
316L (S31603)	1.18	X	
6% Mo (N08367/N08926)	7.64	X	
Alloy 22 (N06022)	11.4	X	
Ti-2 (R50400)	10.1		X

Recommended Material: 304 (max 0.030% C; dual certified)

Recommended Corrosion Allowance: 0.040 inch (includes 0.024 inch corrosion allowance and 0.016 inch erosion allowance)

Process & Operations Limitations:

- Develop rinsing/flushing procedure

STEVEN WAKEMAN VAIL
STATE OF WASHINGTON
39250
REGISTERED PROFESSIONAL ENGINEER
5/24/06
EXPIRES: 12/07/07

Please note that source, special nuclear and byproduct materials, as defined in the Atomic Energy Act of 1954 (AEA), are regulated at the U.S. Department of Energy (DOE) facilities exclusively by DOE acting pursuant to its AEA authority. DOE asserts, that pursuant to the AEA, it has sole and exclusive responsibility and authority to regulate source, special nuclear, and byproduct materials at DOE-owned nuclear facilities. Information contained herein on radionuclides is provided for process description purposes only.

This bound document contains a total of 6 sheets.

REV	DATE	REASON FOR REVISION	PREPARER	CHECKER	APPROVER
2	5/24/06	Issued for Permitting Use		HMK	
1	3/10/05	Issued for Permitting Use	DLA	JRD	APR
0	10/9/03	Issued for Permitting Use	DLA	JRD	SWV

PLANT ITEM MATERIAL SELECTION DATA SHEET

Corrosion Considerations:

Pulse-pots are used to perform back-pulsing on the ultrafilter tube units. Back-pulsing may involve adding cleaning chemicals such as 2 M HNO_3, 2 M NaOH or process condensate.

a General Corrosion
Hamner (1981) lists a corrosion rate for 304 (and 304L) in NaOH of less than 20 mpy (500 μm/y) at 77°F and over 20 mpy at 122°F. He shows 316 (and 316L) has a rate of less than 2 mpy up to 122°F and 50% NaOH. Dillon (2000) and Sedriks (1996) both state that the 300 series stainless steels are acceptable in up to 50% NaOH at temperatures up to about 122°F or slightly above. Divine's work (1986) with simulated-radwaste evaporators, six months at 140°F, showed 304L was slightly more resistant to corrosion (<0.2 mpy) than was 316L (<0.6 mpy); Ni 200, pure nickel, was much less resistant (≈7 mpy) probably due to the complexants. Zapp (1998) notes that the Savannah River evaporator vessels, operating at about 300°F, are made of 304L and have suffered no failures in about 30 years; 304L heat transfer surfaces have failed however after about 10 years.

Davis (1994) states the corrosion rate for 304L in pure NaOH will be less than about 0.1 mpy up to about 212°F though Sedriks (1996) states the data beyond about 122°F are incorrect. Danielson & Pitman (2000), based on short term studies, suggest a corrosion rate of about 0.5 mpy for 316L in simulated waste at boiling, >212°F.

In this system, the hydroxide concentrations and temperatures are such that 304L stainless steel will be acceptable. It must be noted the amount of fluoride is expected to be relatively small except for the contract maximum. The amount of dilution of fluoride when acid is added is unknown but is generally assumed to be normally well diluted. Wilding and Paige (1976) have shown that in 5% nitric acid with 1000 ppm fluoride at 290°F, the corrosion rate of 304L can be kept as low as 5 mpy by the use of Al^{+++}. Additionally, Sedriks (1996) has noted with 10% (≈2N) nitric acid and 3,000 ppm fluoride at 158°F, the corrosion rate of 304L is over 4,000 mpy. Therefore, there is a concern about excessive corrosion rates during acid cleaning. Keeping the vessel as cool as possible when acid is present would reduce the extent of attack by chloride (pitting and crevice corrosion) and, with the presence of Al^{+++}, general corrosion due to fluoride. Properly protected by temperature and fluoride complexants such as Al^{+++}, 304L will be suitable.

Conclusion:
304L is expected to be sufficiently resistant with a probable general corrosion rate of less than 1 mpy. A procedure will be necessary to minimize the presence of fluorides during acid cleaning.

b Pitting Corrosion
Chloride is known to cause pitting in acid and neutral solutions. Dillon (2000) is of the opinion that in alkaline solutions, pH>12, chlorides are likely to promote pitting only in tight crevices. Dillon and Koch (1995) are both of the opinion that fluoride will have little effect in an alkaline media. Jenkins (1998) has stated that localized corrosion can occur under the deposits on heat transfer surfaces, probably due to the chlorides. Further, Revie (2000) and Uhlig (1948) note nitrate inhibits chloride pitting.

Normally the vessel is to operate between 77 and 194°F. At the normal temperature, based on the work of Zapp (1998) and others, 304L stainless steel would be acceptable in the proposed alkaline conditions. Under acidic conditions, 304L is still expected to be acceptable.

Conclusion:
Based on the expected operating conditions, 304L is expected to be satisfactory.

c End Grain Corrosion
End grain corrosion only occurs in metal with exposed end grains and in highly oxidizing acid conditions.

Conclusion:
Not believed likely in this system.

d Stress Corrosion Cracking
The exact amount of chloride required to cause stress corrosion cracking is unknown. In part this is because the amount varies with temperature, metal sensitization, and the environment. But it is also unknown because chloride tends to concentrate under heat transfer conditions, by evaporation, and electrochemically during a corrosion process. Hence, even as little as 10 ppm can lead to cracking under some conditions. Generally, as seen in Sedriks (1996) and Davis (1987), stress corrosion cracking does not usually occur below about 140°F. With the stated temperature and alkaline conditions, 304L is expected to be satisfactory. However, if acid cleaning is to be used and the halide concentration cannot be controlled, 316 L will be the minimum acceptable alloy and it may be necessary to use a more resistant alloy.

Conclusion:
Because of the normal operating environment that will include periodic acid cleaning, the minimum alloy recommended is a 304L stainless steel.

e Crevice Corrosion
See Pitting.

Conclusion:
See Pitting.

PLANT ITEM MATERIAL SELECTION DATA SHEET

f Corrosion at Welds
Corrosion at welds is not considered a problem in the proposed environment.

Conclusion:
Weld corrosion is not considered a problem for this system.

g Microbiologically Induced Corrosion (MIC)
The proposed operating conditions are not conducive to microbial growth – the temperature is approximately correct but the pH is either too alkaline or too acid. Further, the system is sufficiently far downstream of the main entry points of microbes that infection is unlikely.

Conclusion:
MIC is not considered a problem.

h Fatigue/Corrosion Fatigue
Corrosion fatigue is a not expected to be a problem.

Conclusions
Not a concern.

i Vapor Phase Corrosion
Not expected to be a concern.

Conclusion:
Not a concern.

j Erosion
Velocities within the vessel are expected to be small. Based on 24590-WTP-RPT-M-04-0008, a general erosion allowance of 0.016 inch is adequate for components with solids content less than 27.3 wt% at velocities less than 4 mps.

Conclusion:
Not believed to be a concern.

k Galling of Moving Surfaces
Not applicable.

Conclusion:
Not applicable.

l Fretting/Wear
None expected.

Conclusion:
Not considered a problem.

m Galvanic Corrosion
No dissimilar metals are present.

Conclusion:
Not applicable.

n Cavitation
None expected.

Conclusion:
Not believed to be of concern.

o Creep
The temperatures are too low to be a concern.

Conclusion:
Not applicable.

p Inadvertent Nitric Acid Addition
Higher chloride contents and higher temperatures usually require higher alloy materials. Nitrate ions inhibit the pitting and crevice corrosion of stainless alloys. Furthermore, nitric acid passivates these alloys; therefore, lower pH values brought about by increases in the nitric acid content of process fluid will not cause higher corrosion rates for these alloys. The upset condition that was most likely to occur is lowering of the pH of the vessel content by inadvertent addition of 2 M nitric acid. Lowering of pH may make a chloride-containing solution more likely to cause pitting of stainless alloys. Increasing the nitric acid content of the process fluid adds more of the pitting-inhibiting nitrate ion to the process fluid. In addition, adding the nitric acid solution to the stream will dilute the chloride content of the process fluid.

Conclusion:
The recommended materials will be able to withstand a plausible inadvertent addition of 2 M nitric acid.

PLANT ITEM MATERIAL SELECTION DATA SHEET

References:

1. 24590-WTP-RPT-M-04-0008, Rev. 2, *Evaluation Of Stainless Steel Wear Rates In WTP Waste Streams At Low Velocities*
2. 24590-WTP-RPT-PR-04-0001, Rev. B, *WTP Process Corrosion Data*
3. CCN 000853, Zapp, PE, 1998, *Preliminary Assessment of Evaporator Materials of Construction*, BNF—003-98-0029, Rev 0, Westinghouse Savannah River Co., Inc for BNFL Inc.
4. CCN 110849, Memo from B Yorgesen to S Vail, 12 January 2005, "Revised Process Corrosion Data Sheet for UFP-VSL-00002A/B"
5. CCN 130172, Divine, JR, 1986, Letter to A.J. Diliberto, *Reports of Experimentation*, Battelle, Pacific Northwest Laboratories, Richland, WA 99352
6. CCN 130173, Dillon, CP (Nickel Development Institute), Personal Communication to J R Divine (ChemMet, Ltd., PC), 3 Feb 2000.
7. CCN 130178, Wilding, MW and BE Paige, 1976, *Survey on Corrosion of Metals and Alloys in Solutions Containing Nitric Acid*, ICP-1107, Idaho National Engineering Laboratory, Idaho Falls, ID
8. Danielson, MJ & SG Pitman, 2000, *Corrosion Tests of 316L and Hastelloy C-22 in Simulated Tank Waste Solutions*, PNWD-3015 (BNFL-RPT-019, Rev 0), Pacific Northwest Laboratory, Richland WA.
9. Davis, JR (Ed), 1987, *Corrosion, Vol 13*, In "Metals Handbook", ASM International, Metals Park, OH 44073
10. Davis, JR (Ed), 1994, *Stainless Steels*, In ASM Metals Handbook, ASM International, Metals Park, OH 44073
11. Hamner, NE, 1981, *Corrosion Data Survey*, Metals Section, 5th Ed, NACE International, Houston, TX 77218
12. Jenkins, CF, 1998, *Performance of Evaporators in High Level Radioactive Chemical Waste Service*, Presented at Corrosion 98, NACE International, Houston TX 77084
13. Koch, GH, 1995, *Localized Corrosion in Halides Other Than Chlorides*, MTI Pub No. 41, Materials Technology Institute of the Chemical Process Industries, Inc, St Louis, MO 63141
14. Revie, WW, 2000. *Uhlig's Corrosion Handbook*, 2nd Edition, Wiley-Interscience, New York, NY 10158
15. Sedriks, AJ, 1996, *Corrosion of Stainless Steels*, John Wiley & Sons, Inc., New York, NY 10158
16. Uhlig, HH, 1948, *Corrosion Handbook*, John Wiley & Sons, New York, NY 10158

Bibliography:

1. CCN 130170, Blackburn, LD to PG Johnson, Internal Memo, Westinghouse Hanford Co, *Evaluation of 240-AR Chloride Limit*, August 15, 1991.
2. CCN 130171, Ohl, PC to PG Johnson, Internal Memo, Westinghouse Hanford Co, *Technical Bases for Cl- and pH Limits for Liquid Waste Tank Cars*, MA: PCO:90/01, January 16, 1990.
3. Agarwal, DC, *Nickel and Nickel Alloys*, In: Revie, WW, 2000. *Uhlig's Corrosion Handbook*, 2nd Edition, Wiley-Interscience, New York, NY 10158
4. Berhardsson, S, R Mellstrom, and J Oredsson, 1981, *Properties of Two Highly corrosion Resistant Duplex Stainless Steels*, Paper 124, presented at Corrosion 81, NACE International, Houston, TX 77218
5. Jones, RH (Ed.), 1992, *Stress-Corrosion Cracking*, ASM International, Metals Park, OH 44073
6. Phull, BS, WL Mathay, & RW Ross, 2000, *Corrosion Resistance of Duplex and 4-6% Mo-Containing Stainless Steels in FGD Scrubber Absorber Slurry Environments*, Presented at Corrosion 2000, Orlando, FL, March 26-31, 2000, NACE International, Houston TX 77218.
7. Van Delinder, LS (Ed), 1984, *Corrosion Basics*, NACE International, Houston, TX 77084

PLANT ITEM MATERIAL SELECTION DATA SHEET

CCN 110849
Revised Process Corrosion Data Sheet

PROCESS CORROSION DATA SHEET

Component(s) (Name/ID #) Ultrafiltration feed vessels (UFP-VSL-00002 A/B)
Ultrafilter (UFP-FILT-00001,2,3 A/B), Ultrafiltration pulse pot (UFP-PP-00001,2,3,A/B
Ultrafilter Heat Exchangers (UFP-HX-00001A/B)

Facility PTF

In Black Cell? Yes (UFP-VSL-00002A/B only)

Chemicals	Unit[1]	Contract Maximum		Non-Routine		Notes
		Leach	No leach	Leach	No Leach	
Aluminum	g/l	3.61E+01	4.79E+01			
Chloride	g/l	1 20E+01	1 44E+01			
Fluoride	g/l	1 43E+01	1 72E+01			
Iron	g/l	1 69E+02	1 15E+02			
Nitrate	g/l	2 29E+02	2 63E+02			
Nitrite	g/l	6 66E+01	7 97E+01			
Phosphate	g/l	4 81E+01	5.63E+01			
Sulfate	g/l	2 56E+01	3 06E+01			
Mercury	g/l	1 18E+00	1 67E+00			
Carbonate	g/l	1 05E+02	1 06E+02			
Undissolved solids	wt%	25%	25%			
Other (NaMnO4, Pb,...)	g/l	1 00E-02				Note 4
Other	g/l					
pH	N/A					Note 3
Temperature	°F					Note 2

List of Organic Species:

References

System Description: 24590-PTF-3YD-UFP-00001, Rev 0
Mass Balance Document: 24590-WTP-M4C-V11T-00005, Rev A
Normal Input Stream #: UFP04, UFP17, UFP39, UFP07
Off Normal Input Stream # (e.g., overflow from other vessels): N/A
P&ID: 24590-PTF-M6-UFP-P0002,3, Rev 1
PFD: 24590-PTF-M5-V17T-P0010, Rev 1
Technical Reports: N/A

Notes:

1 Concentrations less than 1x 10^{-4} g/l do not need to be reported, list values to two significant digits max
2 T normal operation 77 °F to 194 °F (24590-PTF-MVC-UFP-00002, Rev 0)
3 Alkaline streams with pH range from approximately 12 to 14
4 NaMnO4 is added for oxidative leaching. The other chemicals should not be effected by oxidative leaching. Concentrations may be lowered, but for conservatism did not change in this datasheet

Assumptions:

Assume the NaMnO4 addition was 1 1 Mole per mole of Cr

PLANT ITEM MATERIAL SELECTION DATA SHEET

4.14.3 Ultrafiltration Feed Vessels (UFP-VSL-00002A/B), Ultra Filters (UFP-FILT-00001,2,3 A/B), Ultrafiltration Pulse Pots (UFP-PP-00001A/B, 2A/B, 3A/B)

Routine Operations

These two vessels receive the feed from the ultrafiltration feed preparation vessels (UFP-VSL-00001A/B). The feed is then concentrated to 20 % solids by being pumped and recirculated through an ultrafiltration loop. The liquid fraction of the filtered feed is sent to the LAW vitrification facility. The feed containing the 20 % solids is sampled to determine the appropriate treatment steps. Treatment of the solids may include solids washing to remove excess sodium through dilution and ultrafiltration, and/or caustic leaching by adding 19 M NaOH until the solution reaches 3 M, allowing a period of 8 hours for digestion, during which the solution is heated to between 176 °F to 194 °F, and then cooled back to ambient temperature (77 °F). After cooling, the contents are reconcentrated to 20 % solids by ultrafiltration. Ultrafiltration pulse-pots (UFP-PP-00001A/B, UFP-PP-00002A/B, and UFP-PP-00003A/B) are used to perform back-pulsing on the ultrafilter tube units. Back-pulsing may involve adding cleaning chemicals (2 M HNO3, 2 M NaOH, and process condensate).

Non-Routine Operations that Could Affect Corrosion/Erosion

There is the option to transfer the Sr/TRU solids directly to the HLW blending vessel (HLP-VSL-00028), if necessary.

VESSEL/TANK MATERIAL SELECTION DATA SHEET

R10147156

UFP-VSL-00002A/B (PTF)
Ultrafiltration Feed Vessels

- Design Temperature (°F)(Max/min): 225/40
- Design Pressure (psig) (internal): 15
- Location: incell
- PJM Discharge Velocity (fps) (max): 40
- Drive Cycle (max): 18%

Off-spring items

UFP-PJM-00006- UFP-PJM-00017

ISSUED BY
RPP-WTP PDC
KC 10/21/03
INIT DATE

Contents of this document are Dangerous Waste Permit affecting

Operating conditions are as stated on sheet 5

Operating Modes Considered:

- The vessels operate under normal operating conditions.
- The vessels are heated to 194°F with about 3 M OH^- and permanganate.
- The vessels will be cleaned using 2 N HNO_3 with residual chlorides and fluorides at normal operating temperatures; the condition of high temperature and acid is not examined.
- The vessels are acid with residual halides and an excess of permanganate is added.
- The vessels are filled with process water without other chemicals.

Materials Considered:

Material (UNS No.)	Relative Cost	Acceptable Material	Unacceptable Material
Carbon Steel	0.23		X
304L (S30403)	1.00	X	
316L (S31603)	1.18	X	
6% Mo (N08367/N08926)	7.64	X	
Alloy 22 (N06022)	11.4	X	
Ti-2 (R50400)	10.1		X

Recommended Material: 304 (max 0.030% C; dual certified)

Steam Ejector: components of steam ejector located inside vessel shall be UNS N06022

Recommended Corrosion Allowance: 0.04 inch

Process & Operations Limitations:

- Develop rinsing/flushing procedure for acid and water
- Have waste present before adding NaOH; minimum waste level to be determined

STEVEN WAKEMAN VAIL
STATE OF WASHINGTON
39250
REGISTERED PROFESSIONAL ENGINEER
10/15/03
EXPIRES: 12/07/03

Please note that source, special nuclear and byproduct materials, as defined in the Atomic Energy Act of 1954 (AEA), are regulated at the U.S. Department of Energy (DOE) facilities exclusively by DOE acting pursuant to its AEA authority. DOE asserts, that pursuant to the AEA, it has sole and exclusive responsibility and authority to regulate source, special nuclear, and byproduct materials at DOE-owned nuclear facilities. Information contained herein on radionuclides is provided for process description purposes only.

This bound document contains a total of 5 sheets.

REV	DATE	REASON FOR REVISION	PREPARER	CHECKER	APPROVER
0	10/15/03	Issued for Permitting Use			

10/21/03 Processed Data Entry | Copied QA | 10/21/03 Scanned | Filed

VESSEL/TANK MATERIAL SELECTION DATA SHEET

Corrosion Considerations:

a General Corrosion

Hamner (1981) lists a corrosion rate for 304 (and 304L) in NaOH of less than 20 mpy (500 μm/y) at 77°F and over 20 mpy at 122°F. He shows 316 (and 316L) has a rate of less than 2 mpy up to 122°F and 50% NaOH. Sedriks (1996) states that the 300 series stainless steels are acceptable in up to 50% NaOH at temperatures up to about 122°F or slightly above. Work with simulated-radwaste evaporators, six months at 140°F, showed 304L was slightly more resistant to corrosion (<0.2 mpy) than was 316L (<0.6 mpy); Ni 200, pure nickel, was much less resistant (≈7 mpy) probably due to the complexants. Zapp (1998) notes that the Savannah River evaporator vessels, operating at about 300°F, are made of 304L and have suffered no failures in about 30 years. The 304L heat transfer surfaces have failed, however, after about 10 years. Thus there needs to be nitrate or nitrite present if caustic solutions exceed about 140°F. The expected waste composition envelope is expected to contain sufficient nitrite and nitrate for protection.

Davis (1994) states the corrosion rate for 304L in pure NaOH will be less than about 0.1 mpy up to about 212°F though Sedriks (1996) states the data beyond about 122°F are incorrect (low) due to the presence of oxidizing agents. The waste contains large amounts of oxidizing agents and therefore the data may be valid. Danielson & Pitman (2000), based on short term studies, suggest a corrosion rate of about 0.5 mpy for 316L in simulated waste at boiling, >212°F.

Ohl & Carlos (1994) found in their review of the 242-A Evaporator that the corrosion of 304L in waste similar to that expected in WTP after about two years of operation at 140°F was less than the accepted variability of the plate. Therefore, no definitive corrosion rates were calculated.

In this system, the hydroxide concentrations and temperatures are such that 304L stainless steel will be acceptable. The amount of dilution of fluoride when acid is added is unknown but is expected to be small. Wilding and Paige (1976) have shown that in 5% nitric acid with 1000 ppm fluoride at 290°F, the corrosion rate of 304L can be kept as low as 5 mpy by the use of Al^{+++}. Additionally, Sedriks (1996) has noted with 10% (≈2N) nitric acid and 3,000 ppm fluoride at 158°F, the corrosion rate of 304L is over 4,000 mpy. Therefore, there is a concern about excessive corrosion rates during acid cleaning. Acid cleaning should be done at normal operating temperature in order to reduce the extent of attack by chloride (pitting and crevice corrosion) and, general corrosion due to fluoride. Properly protected by suitable flushing, by temperature control, and by fluoride complexants such as Al^{+++}, 304L will be suitable.

The alternation between hot caustic and acid environments tends to increase the corrosion rate. The use of 304L, with its higher chromium content than 316L, may be more resistant to corrosion.

Conclusion: At temperatures less than about 140°F, 304L is expected to be sufficiently resistant to the waste solution with a probable general corrosion rate of less than 1 mpy. Based on the Savannah River experience with Hanford-like waste at higher temperatures, 304L is expected to be satisfactory to 300°F.

b Pitting Corrosion

Chloride is known to cause pitting in acid and neutral solutions. It is thought that in alkaline solutions, pH>12, chlorides are likely to promote pitting only in tight crevices such as under deposits. Koch (1995) is of the opinion that fluoride will have little effect in an alkaline media. Further, Revie (2000) and Uhlig (1948) note nitrate inhibits chloride pitting.

Normally the vessel is to operate at 77°F with a maximum fluid temperature of 194°F. At these temperatures, based on the work of Zapp (1998) and others, 304L stainless steel would be acceptable in the proposed alkaline conditions. Acid cleaning should be performed only at normal operating temperature and after flushing.

If the vessel were filled with process water and left stagnant, there would be a tendency to pit. The time to initiate would depend on the source of the water, being shorter for filtered river water and longer for DIW. Pitting has been observed in both cases, and is likely because residual chlorides are likely to remain.

Portions of the high pressure steam ejector located within the vessel shall be C-22.

Conclusion:
Localized corrosion, such as pitting, is common but can be mitigated by alloys with higher nickel and molybdenum contents than the standard austenitic stainless steels. Based on the expected operating conditions, 304L is expected to be satisfactory.

c End Grain Corrosion

End grain corrosion only occurs in metal with exposed end grains and in highly oxidizing acid conditions. The normal operating temperature should be maintained during acid cleaning.

Conclusion:
Not likely in this system.

d Stress Corrosion Cracking

The exact amount of chloride required to cause stress corrosion cracking is unknown. In part, this is because the amount varies with temperature, metal sensitization, and the environment. It is also unknown because chloride tends to concentrate under heat transfer conditions, by evaporation, and electrochemically during a corrosion process. Hence, even as little as 10 ppm can lead to cracking under some conditions. Generally, as seen in Sedriks (1996) and Davis (1987), chloride stress corrosion cracking does not usually occur below about 104°F. With the low temperature and alkaline conditions, 304L is expected to be satisfactory. However, acid cleaning should only be performed at normal operating temperature. Although caustic cracking of 304L and 316L is possible, Zapp's work (1998) implies the presence of nitrate and nitrite will inhibit caustic cracking even to 194°F

Conclusion:
Because of the normal operating environment as well as that which can occur during off normal conditions, the minimum alloy recommended is a 304L stainless steel.

VESSEL/TANK MATERIAL SELECTION DATA SHEET

e Crevice Corrosion
See Pitting.

Conclusion:
See Pitting

f Corrosion at Welds
Other than pitting or crevice corrosion, corrosion at welds is not considered a major problem in the proposed environment. Heat tint is normally not a consideration in alkaline conditions.

Conclusion:
Weld corrosion is not considered a problem for this system.

g Microbiologically Induced Corrosion (MIC)
The proposed operating conditions are not conducive to microbial growth – the temperature is approximately correct but the pH is too alkaline. Further, the system is downstream of the main entry points of microbes.

Conclusion:
MIC is not considered a problem.

h Fatigue/Corrosion Fatigue
Corrosion fatigue is a not expected to be a problem.

Conclusions
Not expected to be a concern.

i Vapor Phase Corrosion
The vapor phase portion of the vessel is expected to be contacted with particles of waste from splashing. The presence of wash rings within vessels will provide rinsing capability. 304L will be satisfactory.

Conclusion:
Not expected to be a concern.

j Erosion
Based on past experiments by Smith & Elmore (1992), the solids in the waste are soft and erosion is not expected to be a concern for the vessel wall. Additional localized protection will be provided as required to protect the vessel shell to accommodate PJM discharge velocities of up to 40 feet per second.

Conclusion: The recommended corrosion allowance provides sufficient protection for erosion of the vessel wall, assuming adequate protection is provided to accommodate PJM discharge flow.

k Galling of Moving Surfaces
Not applicable.

Conclusion:
Not applicable.

l Fretting/Wear
No contacting surfaces expected.

Conclusion:
Not applicable.

m Galvanic Corrosion
No dissimilar metals are present.

Conclusion:
Not applicable.

n Cavitation
None expected.

Conclusion:
Not believed to be of concern.

o Creep
The temperatures are too low to be a concern.

Conclusion:
Not applicable.

VESSEL/TANK MATERIAL SELECTION DATA SHEET

References:

1. Danielson, MJ & SG Pitman, 2000, *Corrosion Tests of 316L and Hastelloy C-22 in Simulated Tank Waste Solutions*, PNWD-3015 (BNFL-RPT-019, Rev 0), Pacific Northwest Laboratory, Richland WA.
2. Davis, JR (Ed), 1987, *Corrosion, Vol 13*, In "Metals Handbook", ASM International, Metals Park, OH 44073
3. Davis, JR (Ed), 1994, *Stainless Steels*, In ASM Metals Handbook, ASM International, Metals Park, OH 44073
4. Hamner, NE, 1981, *Corrosion Data Survey*, Metals Section, 5th Ed, NACE International, Houston, TX 77218
5. Koch, GH, 1995, *Localized Corrosion in Halides Other Than Chlorides*, MTI Pub No. 41, Materials Technology Institute of the Chemical Process Industries, Inc, St Louis, MO 63141
6. Ohl, PC & WC Carlos, 1994, *Hanford High-Level Evaporator/Crystallizer Corrosion Evaluation*, WHC-SA-1983-FP, Westinghouse Hanford Co., Richland, WA 99352
7. Revie, WW, 2000. *Uhlig's Corrosion Handbook*, 2nd Edition, Wiley-Interscience, New York, NY 10158
8. Sedriks, AJ, 1996, *Corrosion of Stainless Steels*, John Wiley & Sons, Inc., New York, NY 10158
9. Smith, H. D. and M. R. Elmore, 1992, Corrosion Studies of Carbon Steel under Impinging Jets of Simulated Slurries of Neutralized Current Acid Waste (NCAW) and Neutralized Cladding Removal Waste (NCRW), PNL-7816, Pacific Northwest Laboratory, Richland, Washington.
10. Uhlig, HH, 1948, *Corrosion Handbook*, John Wiley & Sons, New York, NY 10158
11. Wilding, MW and BE Paige, 1976, *Survey on Corrosion of Metals and Alloys in Solutions Containing Nitric Acid*, ICP-1107, Idaho National Engineering Laboratory, Idaho Falls, ID
12. Zapp, PE, 1998, *Preliminary Assessment of Evaporator Materials of Construction*, BNF—003-98-0029, Rev 0, Westinghouse Savannah River Co., Inc for BNFL Inc.

Bibliography:

1. Agarwal, DC, *Nickel and Nickel alloys*, In: Revie, WW, 2000. *Uhlig's Corrosion Handbook*, 2nd Edition, Wiley-Interscience, New York, NY 10158
2. Berhardsson, S, R Mellstrom, and J Oredsson, 1981, *Properties of Two Highly corrosion Resistant Duplex Stainless Steels*, Paper 124, presented at Corrosion 81, NACE International, Houston, TX 77218
3. Jones, RH (Ed.), 1992, *Stress-Corrosion Cracking*, ASM International, Metals Park, OH 44073
4. Phull, BS, WL Mathay, & RW Ross, 2000, *Corrosion Resistance of Duplex and 4-6% Mo-Containing Stainless Steels in FGD Scrubber Absorber Slurry Environments*, Presented at Corrosion 2000, Orlando, FL, March 26-31, 2000, NACE International, Houston TX 77218.
5. Van Delinder, LS (Ed), 1984, *Corrosion Basics*, NACE International, Houston, TX 77084

VESSEL/TANK MATERIAL SELECTION DATA SHEET
OPERATING CONDITIONS

Material Selection Data Sheets for The Pretreatment Facility

Materials Selection Data

Component (Name/ID) UFP-VSL-00002A/B
System UFP

Operations

Chemicals	Unit	Cold Startup	Normal Operation*	Standby/Idle	Cleaning	Accident
Aluminum	g/l	N/A	2.8E+01	N/A	N/A	N/A
Chloride	g/l		5.6E+00			
Fluoride	g/l		7.5E+00			
Hydroxide	g/l		2.6E+00			
Iron	g/l		2.4E+00			
Nitrate	g/l		7.4E+01			
Nitrite	g/l		2.4E+02			
Phosphate	g/l		1.5E+01			
TOC♦	g/l		2.5E+01			
Sulfate	g/l		4.0E+00			
Undissolved solids	g/l		2.4E+02			
Particle size/hardness	µm (##)		N/A			
Other (Hg)	g/l		1.8E-03			
Carbonate	g/l		8.8E-01			
pH	-		1.3E+01			
Dose rate, α, β/γ (inside)	Rad		N/A			
Temperature	°C		2.5E+01			
Velocity	fps		N/A			
Vibration			N/A			
Time of exposure	#		1.0E+02			

* Based on Contract Maximum Chemical A/D run at 60/6

- % of total; ## - use Mho scale

Remarks: Stream UFP 17 used UFP 07 for Undissolved Solids

[X] Black Cell

[X] Flushing

♦ List expected organic species: N/A
Use maximum of 2 significant figures

N/A = Information not available or not in Process Engineering Scope.

PLANT ITEM MATERIAL SELECTION DATA SHEET

R10682507

ISSUED BY
RPP-WTP PDC

UFP-FILT-00001A/B, 2A/B, 3A/B (PTF)
Ultrafilter

- Design Temperature (°F)(max/min): 200/59
- Design Pressure (psig) (max/min): 200/0
- Location: outcell

Contents of this document are Dangerous Waste Permit affecting

Operating conditions are as stated on attached Process Corrosion Data Sheet

Operating Modes Considered:

- The vessel is always alkaline, within the stated limits, at the normal operating temperature.
- The vessel will be cleaned using 2 M HNO_3, 2M caustic or process condensate at normal operating temperatures; the condition of high temperature and acid is not examined.

Materials Considered:

Material (UNS No.)	Relative Cost	Acceptable Material	Unacceptable Material
Carbon Steel	0.23		X
304L (S30403)	1.00		X
316L (S31603)	1.18	X	
6% Mo (N08367/N08926)	7.64	X	
Alloy 22 (N06022)	11.4	X	
Ti-2 (R50400)	10.1		X

Recommended Material: 316 (max 0.030% C; dual certified)

Recommended Corrosion Allowance: 0.040 inch (includes 0.024 inch corrosion allowance and 0.016 inch erosion allowance)

Process & Operations Limitations:

- Develop rinsing/flushing procedure for acid and water

STEVEN WAKEMAN VAIL
STATE OF WASHINGTON
39250
REGISTERED PROFESSIONAL ENGINEER
5/24/06
EXPIRES: 12/07/07

Please note that source, special nuclear and byproduct materials, as defined in the Atomic Energy Act of 1954 (AEA), are regulated at the U.S. Department of Energy (DOE) facilities exclusively by DOE acting pursuant to its AEA authority. DOE asserts, that pursuant to the AEA, it has sole and exclusive responsibility and authority to regulate source, special nuclear, and byproduct materials at DOE-owned nuclear facilities. Information contained herein on radionuclides is provided for process description purposes only.

This bound document contains a total of 7 sheets.

REV	DATE	REASON FOR REVISION	PREPARER	CHECKER	APPROVER
3	5/24/06	Issued for Permitting Use		HMK	SWVail
2	3/14/05	Issued for Permitting Use	DLA	JRD	APR
1	12/10/03	Issued for Permitting Use	DLA	JRD	SWV
0	10/15/03	Issued for Permitting Use	DLAdler	JRDivine	SWVail

PLANT ITEM MATERIAL SELECTION DATA SHEET

Corrosion Considerations:

a General Corrosion
Hamner (1981) lists a corrosion rate for 304 (and 304L) in NaOH of less than 20 mpy (500 μm/y) at 77°F and over 20 mpy at 122°F. He shows 316 (and 316L) has a rate of less than 2 mpy up to 122°F and 50% NaOH. Dillon (2000) and Sedriks (1996) both state that the 300 series stainless steels are acceptable in up to 50% NaOH at temperatures up to about 122°F or slightly above.

Davis (1994) states the corrosion rate for 304L in pure NaOH will be less than about 0.1 mpy up to about 212°F though Sedriks states the data beyond about 122°F are incorrect. Danielson & Pitman (2000), based on short term studies, suggest a corrosion rate of about 0.5 mpy for 316L in simulated waste at boiling, >212°F. In addition, Zapp (1998) reports that the Savannah River Site evaporator shells have successfully operated for 30 years at temperatures of about 300°F; 304L heat transfer tubes have survived only about 10 years.

In this system, the normal hydroxide concentrations and temperatures are such that 304L stainless steel will be acceptable.

The proposed acid cleaning requires an examination of the conditions in the system during that period. Wilding and Paige (1976) have shown that in 5% nitric acid with 1000 ppm fluoride at 290°F, the corrosion rate of 304L can be kept as low as 5 mpy by the use of Al^{+++}. Additionally, Sedriks (1996) has noted with 10% (≈2N) nitric acid and 3,000 ppm fluoride at 158°F, the corrosion rate of 304L is over 4,000 mpy. Therefore, there is a concern about excessive corrosion rates during acid cleaning especially in the pores of the filters unless the free fluoride concentration is kept low – even small amounts of corrosion can change the filter characteristics. Keeping the vessel as cool as possible, below 100°F if possible would reduce the extent of attack by chloride (pitting and crevice corrosion) and, and with the addition of Al^{+++}, general corrosion due to fluoride. At the stated temperature and fluoride complexants, such as Al^{+++}, 304L would be suitable, provided there is strict control of the acid cleaning conditions. 316L would provide a greater margin of safety.

Conclusion:
At the expected temperatures, 304L is expected to be sufficiently resistant to the waste solution with a probable general corrosion rate of less than 1 mpy. During acid cleaning, in the presence of fluoride, 316L is required as a minimum.

b Pitting Corrosion
Chloride is known to cause pitting in acid and neutral solutions. Dillon (2000) is of the opinion that in alkaline solutions, pH>12, chlorides are likely to promote pitting only in tight crevices. Dillon and Koch (1995) are both of the opinion that fluoride will have little effect in an alkaline media. Jenkins (1998) has stated that localized corrosion can occur under the deposits on heat transfer surfaces, probably due to the chlorides. Further, Revie (2000) and Uhlig (1948) note that nitrates inhibit chloride pitting.

Normally the vessel is to operate between 77 and 86°F. At the normal temperature, based on the work of Zapp (1998) and others, 304L stainless steel would be acceptable in the proposed alkaline conditions. There is uncertainty about the behavior of the sintered junctions in the filters in strong caustic.

Under acidic or neutral pH conditions, a more pitting resistant alloy may be needed. Depending on the temperature, concentration of the chloride, and the duration of exposure during acid cleaning it might be feasible to use 316L stainless steel. At a normal operating temperature and only residual chlorides during nitric cleaning, 316L would be acceptable.

If the vessel were filled with process water and left stagnant, there would be a tendency to pit. The time to initiate would depend on the source of the water, being shorter for filtered river water and longer for DIW. Pitting has been observed in both cases, and is likely because residual chlorides are expected to remain.

Conclusion:
Localized corrosion, such as pitting, is common but can be mitigated by alloys with higher nickel and molybdenum contents Based on the expected operating conditions and the intent to use acid washes inside the vessels 316L is the minimum acceptable. The presence of crevices in the filter makes 316L the minimum acceptable material for the filters.

c End Grain Corrosion
End grain corrosion only occurs in metal with exposed end grains and in highly oxidizing acid conditions.

Conclusion:
Not expected to be a concern.

PLANT ITEM MATERIAL SELECTION DATA SHEET

d Stress Corrosion Cracking
The exact amount of chloride required to cause stress corrosion cracking is unknown. In part this is because the amount varies with temperature, metal sensitization, and the environment. But it is also unknown because chloride tends to concentrate under heat transfer conditions, by evaporation, and electrochemically during a corrosion process. Hence, even as little as a few ppm can lead to cracking under some conditions. Generally, as seen in Sedriks (1996) and Davis (1987), chloride stress corrosion cracking does not usually occur below about 140°F. With the stated temperature and alkaline conditions, 304L is expected to be satisfactory.

Conclusion.
At the normal operating environment, the alloy recommended is a 304L or 316L stainless with 316L filter tubes to provide added protection from the halides.

e Crevice Corrosion
See Pitting.

Conclusion:
See Pitting

f Corrosion at Welds
Corrosion at welds is not considered a problem in the proposed environment.

Conclusion:
Weld corrosion is not considered a problem for this system except as noted above.

g Microbiologically Induced Corrosion (MIC)
The proposed operating conditions are not conducive to microbial growth.

Conclusion:
MIC is not considered a problem.

h Fatigue/Corrosion Fatigue
The presence of multiple tubes, presumably welded at both ends, is a potential concern. Proper design, using heat exchanger industry standards, will eliminate fatigue and corrosion fatigue concerns.

Conclusions
Not a concern.

i Vapor Phase Corrosion
No significant vapor phase region is expected.

Conclusion:
Vapor phase corrosion is not expected to be a concern.

j Erosion
Velocities within the vessel are expected to be low. Based on 24590-WTP-RPT-M-04-0008, a general erosion allowance of 0.016 inch is adequate for components with solids content less than 27.3 wt%.

Conclusion:
Not expected to be a concern.

k Galling of Moving Surfaces
Not applicable.

Conclusion:
Not applicable.

l Fretting/Wear
No contacting surfaces expected.

Conclusion:
Not applicable.

PLANT ITEM MATERIAL SELECTION DATA SHEET

m Galvanic Corrosion
No dissimilar metals are present.

Conclusion:
Not applicable.

n Cavitation
None expected.

Conclusion:
Not believed to be of concern.

o Creep
The temperatures are too low to be a concern.

Conclusion:
Not applicable.

p Inadvertent Nitric Acid Addition
Higher chloride contents and higher temperatures usually require higher alloy materials. Nitrate ions inhibit the pitting and crevice corrosion of stainless alloys. Furthermore, nitric acid passivates these alloys; therefore, lower pH values brought about by increases in the nitric acid content of process fluid will not cause higher corrosion rates for these alloys. The upset condition that was most likely to occur is lowering of the pH of the vessel content by inadvertent addition of 2 M nitric acid. Lowering of pH may make a chloride-containing solution more likely to cause pitting of stainless alloys. Increasing the nitric acid content of the process fluid adds more of the pitting-inhibiting nitrate ion to the process fluid. In addition, adding the nitric acid solution to the stream will dilute the chloride content of the process fluid.

Conclusion:
The recommended materials will be able to withstand a plausible inadvertent addition of 2 M nitric acid.

PLANT ITEM MATERIAL SELECTION DATA SHEET

References:

1. 24590-WTP-RPT-M-04-0008, Rev. 2, *Evaluation Of Stainless Steel Wear Rates In WTP Waste Streams At Low Velocities*
2. 24590-WTP-RPT-PR-04-0001, Rev. B, *WTP Process Corrosion Data*
3. CCN 000853, Zapp, PE, 1998, *Preliminary Assessment of Evaporator Materials of Construction*, BNF—003-98-0029, Rev 0, Westinghouse Savannah River Co., Inc for BNFL Inc.
4. CCN 110849, Memo from B Yorgesen to S Vail, 12 January 2005, "Revised Process Corrosion Data Sheet for UFP-VSL-00002A/B"
5. CCN 112293, e-mail from B Yorgesen to D Adler, 2 February 2005, "UFP Equipment Operating Temepratures"
6. CCN 130173, Dillon, CP (Nickel Development Institute), Personal Communication to J R Divine (ChemMet, Ltd., PC), 3 Feb 2000.
7. CCN 130178, Wilding, MW and BE Paige, 1976, *Survey on Corrosion of Metals and Alloys in Solutions Containing Nitric Acid*, ICP-1107, Idaho National Engineering Laboratory, Idaho Falls, ID
8. Danielson, MJ & SG Pitman, 2000, *Corrosion Test of 316L and Hastelloy C-22 in Simulated Tank Waste Solutions*, PNWD-3015 (BNFL-RPT-019, Rev 0), Pacific Northwest Laboratory, Richland WA.
9. Davis, JR (Ed), 1987, *Corrosion, Vol 13*, In "Metals Handbook", ASM International, Metals Park, OH 44073
10. Davis, JR (Ed), 1994, *Stainless Steels*, In ASM Metals Handbook, ASM International, Metals Park, OH 44073
11. Hamner, NE, 1981, *Corrosion Data Survey*, Metals Section, 5th Ed, NACE International, Houston, TX 77218
12. Jenkins, CF, 1998, *Performance of Evaporators in High Level Radioactive Chemical Waste Service*, Presented at Corrosion 98, NACE International, Houston TX 77084
13. Koch, GH, 1995, *Localized Corrosion in Halides Other Than Chlorides*, MTI Pub No. 41, Materials Technology Institute of the Chemical Process Industries, Inc, St Louis, MO 63141
14. Revie, WW, 2000. *Uhlig's Corrosion Handbook*, 2nd Edition, Wiley-Interscience, New York, NY 10158
15. Sedriks, AJ, 1996, *Corrosion of Stainless Steels*, John Wiley & Sons, Inc., New York, NY 10158
16. Uhlig, HH, 1948, *Corrosion Handbook*, John Wiley & Sons, New York, NY 10158

Bibliography:

1. CCN 130171, Ohl, PC to PG Johnson, Internal Memo, Westinghouse Hanford Co, *Technical Bases for Cl- and pH Limits for Liquid Waste Tank Cars*, MA: PCO:90/01, January 16, 1990.
2. CCN 130172, Divine, JR, 1986, Letter to A.J. Diliberto, *Reports of Experimentation*, Battelle, Pacific Northwest Laboratories, Richland, WA 99352
3. Agarwal, DC, *Nickel and Nickel Alloys*, In: Revie, WW, 2000. *Uhlig's Corrosion Handbook*, 2nd Edition, Wiley-Interscience, New York, NY 10158
4. Jones, RH (Ed.), 1992, *Stress-Corrosion Cracking*, ASM International, Metals Park, OH 44073
5. Van Delinder, LS (Ed), 1984, *Corrosion Basics*, NACE International, Houston, TX 77084

PLANT ITEM MATERIAL SELECTION DATA SHEET

CCN 110849
Revised Process Corrosion Data Sheet

PROCESS CORROSION DATA SHEET

Component(s) (Name/ID #) Ultrafiltration feed vessels (UFP-VSL-00002 A/B)
Ultrafilter (UFP-FILT-00001,2,3 A/B), Ultrafiltration pulse pot (UFP-PP-00001,2,3,A/B
Ultrafilter Heat Exchangers (UFP-HX-00001A/B)

Facility PTF

In Black Cell? Yes (UFP-VSL-00002A/B only)

Chemicals	Unit[1]	Contract Maximum		Non-Routine		Notes
		Leach	No leach	Leach	No Leach	
Aluminum	g/l	3.61E+01	4.79E+01			
Chloride	g/l	1.20E+01	1.44E+01			
Fluoride	g/l	1.43E+01	1.72E+01			
Iron	g/l	1.69E+02	1.15E+02			
Nitrate	g/l	2.29E+02	2.63E+02			
Nitrite	g/l	6.66E+01	7.97E+01			
Phosphate	g/l	4.81E+01	5.63E+01			
Sulfate	g/l	2.56E+01	3.06E+01			
Mercury	g/l	1.18E+00	1.67E+00			
Carbonate	g/l	1.05E+02	1.06E+02			
Undissolved solids	wt%	25%	25%			
Other (NaMnO4, Pb,...)	g/l	1 00E-02				Note 4
Other	g/l					
pH	N/A					Note 3
Temperature	°F					Note 2

List of Organic Species:

References

System Description: 24590-PTF-3YD-UFP-00001, Rev 0
Mass Balance Document: 24590-WTP-M4C-V11T-00005, Rev A
Normal Input Stream #: UFP04, UFP17, UFP39, UFP07
Off Normal Input Stream # (e.g., overflow from other vessels): N/A
P&ID 24590-PTF-M6-UFP-P0002,3, Rev 1
PFD: 24590-PTF-M5-V17T-P0010, Rev 1
Technical Reports. N/A

Notes:

1 Concentrations less than 1x 10^{-4} g/l do not need to be reported; list values to two significant digits max.
2. T normal operation 77 °F to 194 °F (24590-PTF-MVC-UFP-00002, Rev 0)
3 Alkaline streams with pH range from approximately 12 to 14
4. NaMnO4 is added for oxidative leaching The other chemicals should not be effected by oxidative leaching. Concentrations may be lowered, but for conservatism did not change in this datasheet.

Assumptions:

Assume the NaMnO4 addition was 1.1 Mole per mole of Cr.

Correction to note 2: Normal operating temperature in the Ultrafilter is 77°F and the maximum operating temperature is 86°F. Temperatures shown are specific to the Ultrafilter Feed Vessels (CCN 112293).

PLANT ITEM MATERIAL SELECTION DATA SHEET

24590-WTP-RPT-PR-04-0001, Rev. B
WTP Process Corrosion Data

4.14.3 Ultrafiltration Feed Vessels (UFP-VSL-00002 A/B), Ultra Filters (UFP-FILT-00001A/B, 2A/B, 3A/B), Ultrafiltration Pulse Pots (UFP-PP-00001A/B,2A/B, 2A/B)

Routine Operations

These two vessels receive the feed from the ultrafiltration feed preparation vessels (UFP-VSL-00001A/B). The feed is then concentrated to 20 % solids by being pumped and recirculated through an ultrafiltration loop. The liquid fraction of the filtered feed is sent to the LAW vitrification facility. The feed containing the 20 % solids is sampled to determine the appropriate treatment steps. Treatment of the solids may include solids washing to remove excess sodium through dilution and ultrafiltration, and/or caustic leaching by adding 19 M NaOH until the solution reaches 3 M, allowing a period of 8 hours for digestion, during which the solution is heated to between 176 °F to 194 °F, and then cooled back to ambient temperature (77 °F). After cooling, the contents are reconcentrated to 20 % solids by ultrafiltration. Ultrafiltration pulse-pots (UFP-PP-00001A/B, UFP-PP-00002A/B, and UFP-PP-00003A/B) are used to perform back-pulsing on the ultrafilter tube units. Back-pulsing may involve adding cleaning chemicals (2 M HNO_3, 2 M NaOH, and process condensate).

Non-Routine Operations that Could Affect Corrosion/Erosion

There is the option to transfer the Sr/TRU solids directly to the HLW blending vessel (HLP-VSL-00028), if necessary.

PLANT ITEM MATERIAL SELECTION DATA SHEET

ISSUED BY
RPP-WTP PDC

R10661550

UFP-VSL-00001A/B (PTF)
Ultrafiltration Feed Preparation Vessel

- Design Temperature (°F)(max/min): 150/40
- Design Pressure (psig) (max/min): 15/-12
- Location: incell
- PJM Discharge Velocity (fps): 40
- Drive Cycle: 17 % (at 40 fps)

Offspring items –

UFP-VSL-00001A --
UFP-PJM-00001 – UFP-PJM-00004
UFP-PJM-00044, UFP-PJM-00053
UFP-PJM-00105 – UFP-PJM-00106

UFP-VSL-00001B –
UFP-PJM-00045 – UFP-PJM-00050
UFP-PJM-00101 – UFP-PJM-00102

Contents of this document are Dangerous Waste Permit affecting

Operating conditions are as stated on attached Process Corrosion Data Sheet

No maintenance will be performed on these vessels.

Operating Modes Considered:

- Normal operating conditions
- The vessel may be cleaned using 2 N HNO_3 with residual chlorides and fluorides at normal operating temperatures; the condition of high temperature and acid is not examined.

Materials Considered:

Material (UNS No.)	Relative Cost	Acceptable Material	Unacceptable Material
Carbon Steel	0.23		X
304L (S30403)	1.00		X
316L (S31603)	1.18	X	
6% Mo (N08367/N08926)	7.64	X	
Alloy 22 (N06022)	11.4	X	
Ti-2 (R50400)	10.1		X

Recommended Material: 316 (max 0.030% C, dual certified)

Steam Ejector: high temperature components of steam ejector located inside vessel shall be UNS N06022

Recommended Corrosion Allowance: 0.040 inch (includes 0.024 inch corrosion allowance and 0.016 inch general erosion allowance; localized protection is required as discussed in section j)

Process & Operations Limitations:

- Develop flushing/rinsing procedure for acid and water.

STEVEN WAKEMAN VAIL
STATE OF WASHINGTON
39250
REGISTERED PROFESSIONAL ENGINEER

1/6/06

EXPIRES: 12/07/07

Please note that source, special nuclear and byproduct materials, as defined in the Atomic Energy Act of 1954 (AEA), are regulated at the U.S. Department of Energy (DOE) facilities exclusively by DOE acting pursuant to its AEA authority. DOE asserts, that pursuant to the AEA, it has sole and exclusive responsibility and authority to regulate source, special nuclear, and byproduct materials at DOE-owned nuclear facilities. Information contained herein on radionuclides is provided for process description purposes only.

This bound document contains a total of 7 sheets.

REV	DATE	REASON FOR REVISION	PREPARER	CHECKER	APPROVER
2	1/6/06	Issued for Permitting Use		HMK	SWV
1	1/24/05	Issued for Permitting Use	DLA	JRD	SWV
0	10/19/03	Issued for Permitting Use	DLA	JRD	SWV

PLANT ITEM MATERIAL SELECTION DATA SHEET

Corrosion Considerations:

Waste is maintained at 77°F by use of a chiller jacket. For Envelope C waste only, contents are heated to a temperature of 122°F necessary for Sr/TRU precipitation. A steam ejector is available to maintain the necessary reaction temperature. Chemical reagent additions are 19M NaOH followed by 1.0 M $Sr(NO_3)_2$ followed by 1M $NaMnO_4$. It is anticipated periodic acid cleaning will be necessary.

a General Corrosion
Hamner (1981) lists a corrosion rate for 304 (and 304L) in NaOH of less than 20 mpy (500 μm/y) at 77°F and over 20 mpy at 122°F. He shows 316 (and 316L) has a rate of less than 2 mpy up to 122°F and 50% NaOH. Dillon (2000) and Sedriks (1996) both state that the 300 series stainless steels are acceptable in up to 50% NaOH at temperatures up to about 122°F or slightly above. Divine's work (1986) with simulated-radwaste evaporators, six months at 140°F, showed 304L was slightly more resistant to corrosion (<0.2 mpy) than was 316L (<0.6 mpy); Ni 200, pure nickel, was much less resistant (≈7 mpy) probably due to the complexants. Zapp (1998) notes that the Savannah River evaporator vessels, operating at about 300°F, are made of 304L and have suffered no failures in about 30 years. The 304L heat transfer surfaces have failed, however, after about 10 years. Danielson & Pitman (2000), based on short term studies, suggest a corrosion rate of about 0.5 mpy for 316L in simulated waste at boiling, >212°F. Davis (1994) states the corrosion rate for 304L in pure NaOH will be less than about 1 mpy up to about 212°F though Sedriks states the corrosion rate data beyond about 122°F are low due to the presence of oxidizing species.

Ohl & Carlos (1994) found in their review of the 242-A Evaporator, in waste similar to that expected in WTP, that the corrosion of 304L after about two years of operation at 140°F was less than the accepted variability of the original plate. Because of uncertainties in the starting thickness of the metal, a review of the raw data was inconclusive.

There is a concern about excessive corrosion rates during acid cleaning in the presence of the expected levels of fluoride. Acid wash should only be performed at normal operating temperatures in order to reduce the extent of attack by chloride (pitting and crevice corrosion) and general corrosion due to fluoride.

Conclusion:
At temperatures less than about 140°F, 304L or 316L are expected to be sufficiently resistant to the waste solution with a probable general corrosion rate of less than 1 mpy. Based on the Savannah River experience with Hanford-like waste at higher temperatures, either 304L or 316L is expected to be satisfactory to 300°F.

b Pitting Corrosion
Chloride is known to cause pitting in acid and neutral solutions. Dillon (2000) is of the opinion that in alkaline solutions, pH>12, chlorides are likely to promote pitting only in tight crevices. Dillon and Koch (1995) are both of the opinion that fluoride will have little effect in an alkaline media.

Normally the vessel is to operate between 77°F and 122°F. At the normal temperature, based on the work of Zapp (1998) and others, 304L stainless steel would be acceptable in the proposed alkaline conditions. Under acidic or neutral pH conditions, 316L will be more resistant to pitting due to the chloride concentration.

If the vessel were filled with process water and left stagnant, there would be a tendency to pit. The time to initiate would depend on the source of the water, being shorter for filtered river water and longer for DIW. Therefore, controls on washing and rinsing are required.

The high temperature portions of the high pressure steam ejector that are located within the vessel shall be C-22.

Conclusion:
Localized corrosion, such as pitting, is common but can be mitigated by alloys with higher nickel and molybdenum contents. Based on the expected operating conditions and the possibility of acid washes inside the vessels, 316L is recommended.

c End Grain Corrosion
End grain corrosion only occurs in metal with exposed end grains and in highly oxidizing acid conditions. Acid cleaning should be performed only at normal operating temperature.

Conclusion:
Not applicable to this system.

d Stress Corrosion Cracking
The exact amount of chloride required to cause stress corrosion cracking is unknown. In part this is because the amount varies with temperature, metal sensitization, and the environment. It is also unknown because chloride tends to concentrate under heat transfer conditions, by evaporation, and electrochemically during a corrosion process. Hence, even as little as 10 ppm can lead to cracking under some conditions. Koch (1995) has noted that fluoride exacerbates chloride intergranular stress corrosion cracking. Generally, as seen in Sedriks (1996) and Davis (1987), stress corrosion cracking does not usually occur below about 140°F. With the low operating temperature and alkaline conditions, 304L and 316L are expected to be satisfactory in regards to resistance to chloride cracking. Davis (1987) suggests caustic cracking is a concern above about 212°F. However, Zapp's work (1998) implies that neither 304L nor 316L will crack in waste.

Conclusion:
Because of the normal operating environment as well as that which can occur during off normal conditions, and possibility of acid washing, 304L is the minimum alloy recommended and 316L may be marginally better.

PLANT ITEM MATERIAL SELECTION DATA SHEET

e Crevice Corrosion
The high solids loading may make deposits more common and, consequently, the vessel more susceptible to crevice formation. See Pitting.

Conclusion:
Lower temperatures and higher pH mitigate the formation of crevice corrosion. See also Pitting.

f Corrosion at Welds
Corrosion at welds is not considered a problem in the proposed environment.

Conclusion:
Weld corrosion is not considered a problem for this system.

g Microbiologically Induced Corrosion (MIC)
The proposed operating conditions are not conducive to microbial growth – the temperature is approximately correct but the pH is either too alkaline or too acid. Further, the system is downstream of the main entry points of microbes.

Conclusion:
MIC is not considered a problem.

h Fatigue/Corrosion Fatigue
Corrosion fatigue is a not expected to be a problem.

Conclusions
Not expected to be a concern.

i Vapor Phase Corrosion
The vapor phase portion of the vessel is expected to be contacted with particles of waste from splashing. It is unknown whether this will be sufficiently washed or whether residual acids or solids will be present. Due to the possibility of solid or acids and solids being present, 316L is recommended. In the case of the steam ejector, a high nickel alloy is needed.

Conclusion:
Not expected to be a concern.

j Erosion
Based on past experiments by Smith & Elmore (1992), the solids are soft and erosion is not expected to be a concern for the vessel wall. Based on 24590-WTP-RPT-M-04-0008, a general erosion allowance of 0.016 inch is adequate for components with maximum solids content up to 27.3 wt%. Additional 316L stainless steel should be provided as localized protection for the applicable portions of the bottom head to accommodate PJM discharge velocities of up to 12 m/s with normal maximum solids concentrations of 3.8 wt% and maximum solids concentrations of 27.3 wt% with a usage of 56 % operation as documented in 24590-WTP-M0C-50-00004. UPF-VSL-00001A/B requires at least 0.129-inch additional protection. The 27.3 wt% is considered to be conservative. The fraction of time the solids concentration is expected to be at maximum is 10%. During normal operation, 90 % of the time, the solids content of UFP-VSL-00001A/B is expected to be 3.8 wt%.

The wear of the PJM nozzles can occur from flow for both the discharge and reflood cycles of operation. At least 0.087–inch of additional 316L stainless steel should be provided on the inner surface of the PJM nozzle to accommodate wear due to PJM discharge and suction velocities with solids concentrations of 3.8 wt% and a maximum solids concentration of 27.3 wt% with a usage of 56 % operation as documented in 24590-WTP-M0C-50-00004.

Conclusion:
The recommended corrosion allowance provides sufficient protection for erosion of the vessel wall. Additional localized protection for the bottom head will accommodate PJM discharge velocities and for the PJM nozzles will accommodate PJM discharge and reflood velocities.

k Galling of Moving Surfaces
Not applicable.

Conclusion:
Not applicable.

l Fretting/Wear
No contacting surfaces expected.

Conclusion:
Not applicable.

m Galvanic Corrosion
No significantly dissimilar metals are present.

Conclusion:
Not expected to be a concern.

PLANT ITEM MATERIAL SELECTION DATA SHEET

n Cavitation
None expected.

Conclusion:
Not believed to be of concern.

o Creep
The temperatures are too low to be a concern.

Conclusion:
Not applicable.

p Inadvertent Nitric Acid Addition
Higher chloride contents and higher temperatures usually require higher alloy materials. Nitrate ions inhibit the pitting and crevice corrosion of stainless alloys. Furthermore, nitric acid passivates these alloys; therefore, lower pH values brought about by increases in the nitric acid content of process fluid will not cause higher corrosion rates for these alloys. The upset condition that was most likely to occur is lowering of the pH of the vessel content by inadvertent addition of 0.5 M nitric acid. Lowering of pH may make a chloride-containing solution more likely to cause pitting of stainless alloys. Increasing the nitric acid content of the process fluid adds more of the pitting-inhibiting nitrate ion to the process fluid. In addition, adding the nitric acid solution to the stream will dilute the chloride content of the process fluid.

Conclusion:
The recommended materials will be able to withstand a plausible inadvertent addition of 0.5 M nitric acid for a limited period.

PLANT ITEM MATERIAL SELECTION DATA SHEET

References:

1. 24590-WTP-M0C-50-00004, Rev. D, *Wear Allowance for WTP Waste Slurry Systems*
2. 24590-WTP-RPT-M-04-0008, Rev. 2, *Evaluation Of Stainless Steel Wear Rates In WTP Waste Streams At Low Velocities*
3. 24590-WTP-RPT-PR-04-0001, Rev. B, *WTP Process Corrosion Data*
4. Danielson, MJ & SG Pitman, 2000, *Corrosion Test of 316L and Hastelloy C-22 in Simulated Tank Waste Solutions*, PNWD-3015 (BNFL-RPT-019, Rev 0), Pacific Northwest Laboratory, Richland WA.
5. Davis, JR (Ed), 1987, *Corrosion, Vol 13*, In "Metals Handbook", ASM International, Metals Park, OH 44073
6. Davis, JR (Ed), 1994, *Stainless Steels*, In ASM Metals Handbook, ASM International, Metals Park, OH 44073
7. Dillon, CP (Nickel Development Institute), Personal Communication to J R Divine (ChemMet, Ltd., PC), 3 Feb 2000.
8. Divine, JR, 1986, Letter to A.J. Diliberto, *Reports of Experimentation*, Battelle, Pacific Northwest Laboratories, Richland, WA 99352
9. Hamner, NE, 1981, *Corrosion Data Survey*, Metals Section, 5th Ed, NACE International, Houston, TX 77218
10. Koch, GH, 1995, *Localized Corrosion in Halides Other Than Chlorides*, MTI Pub No. 41, Materials Technology Institute of the Chemical Process Industries, Inc, St Louis, MO 63141
11. Ohl, PC & WC Carlos, 1994, *Hanford High-Level Evaporator/Crystallizer Corrosion Evaluation*, Presented at Corrosion 94, NACE International, Houston TX 77218.
12. Sedriks, AJ, 1996, *Corrosion of Stainless Steels*, John Wiley & Sons, Inc., New York, NY 10158
13. Smith, H. D. and M. R. Elmore, 1992, Corrosion Studies of Carbon Steel under Impinging Jets of Simulated Slurries of Neutralized Current Acid Waste (NCAW) and Neutralized Cladding Removal Waste (NCRW), PNL-7816, Pacific Northwest Laboratory, Richland, Washington.
14. Zapp, PE, 1998, *Preliminary Assessment of Evaporator Materials of Construction*, BNF—003-98-0029, Rev 0, Westinghouse Savannah River Co., Inc for BNFL Inc.

Bibliography:

1. Jenkins, CF, 1998, *Performance of Evaporators in High Level Radioactive Chemical Waste Service*, Presented at Corrosion 98, NACE International, Houston TX 77084
2. Jenkins, CF. SRTC, teleconference with JR Divine, RPP-WTP, 16 February, 2000.
3. Revie, WW, 2000. *Uhlig's Corrosion Handbook*, 2nd Edition, Wiley-Interscience, New York, NY 10158
4. Uhlig, HH, 1948, *Corrosion Handbook*, John Wiley & Sons, New York, NY 10158
5. Wilding, MW and BE Paige, 1976, *Survey on Corrosion of Metals and Alloys in Solutions Containing Nitric Acid*, ICP-1107, Idaho National Engineering Laboratory, Idaho Falls, ID

PLANT ITEM MATERIAL SELECTION DATA SHEET

24590-WTP-RPT-PR-04-0001, Rev. B
WTP Process Corrosion Data

PROCESS CORROSION DATA SHEET

Component(s) (Name/ID #) Ultrafiltration feed preparation vessel (UFP-VSL-00001A/B)

Facility PTF

In Black Cell? Yes

Chemicals	Unit[1]	Contract Maximum		Non-Routine		Notes
		Leach	No leach	Leach	No Leach	
Aluminum	g/l	7 25E+01	6.91E+01			
Chloride	g/l	2.65E+01	2.93E+01			
Fluoride	g/l	3 14E+01	3 49E+01			
Iron	g/l	5.88E+01	5.98E+01			
Nitrate	g/l	4 96E+02	5 34E+02			
Nitrite	g/l	1.44E+02	1 60E+02			
Phosphate	g/l	1.06E+02	1 15E+02			
Sulfate	g/l	5.56E+01	6.17E+01			
Mercury	g/l	5.66E-01	3 53E-01			
Carbonate	g/l	1.92E+02	2.01E+02			
Undissolved solids	wt%	27 0%	27 3%			Note 3
Other (NaMnO4, Pb,...)	g/l					
Other	g/l					
pH	N/A					Note 4
Temperature	°F					Note 2

List of Organic Species:

References

System Description 24590-PTF-3YD-UFP-00001, Rev 0
Mass Balance Document: 24590-WTP-M4C-V11T-00005, Rev A
Normal Input Stream #: FEP03, HLP12
Off Normal Input Stream # (e.g., overflow from other vessels): N/A
P&ID. 24590-PTF-M6-UFP-P0001, Rev 1
PFD 24590-PTF-M5-V17T-P0009, Rev 0
Technical Reports: N/A

Notes:

1. Concentrations less than 1x 10^{-4} g/l do not need to be reported; list values to two significant digits max
2. T normal operation 77 °F to 122 °F for Envelope A, B, C, 68 °F to 86 °F for plant wash (24590-PTF-MVC-UFP-00001, Rev 0)
3. Based on HLP12 Other streams entering the vessel will dilute this stream.
4. Mainly alkaline streams with a pH range of approximately 12 to 14.

Assumptions:

4.14.2 Ultrafiltration Feed Preparation Vessel (UFP-VSL-00001A/B)

Routine Operations

Envelope C processing includes solids removal and Sr/TRU precipitation. Therefore, this process is operated separately from the other envelopes (i.e., Envelopes A/D, B/D). Feed during Envelope C processing is received at a target molarity of 6 M sodium. If the feed is received too dilute, the feed may be recycled to the waste feed evaporator feed vessels (FEP-VSL-00017A/B) for further evaporation. Furthermore, if dilution of the feed to 6 M sodium is required, process condensate can be added. Once the vessel level reaches the desired low-level set point for agitation, the pulse jet mixers are activated. The pulse jet mixers run continually until the vessel is emptied below the low level set point.

The precipitation reaction requires a heated solution of 122 °F; therefore, a heating steam ejector is available in the ultrafiltration feed preparation vessel to maintain the necessary reaction temperature. Reagents are added to Envelope C contents in vessels UFP-VSL-00001A or B to commence precipitation. The final concentration of free hydroxide, strontium, and permanganate solutions are 1.0 M OH^-, 0.075 M Sr^{2+}, and 0.05 M MnO_4^-, respectively. The addition also assumes that the initial concentrations are zero in each case. Therefore, the volume of each reagent added is strictly based on the initial liquid level (volume) in the vessel at the beginning of the reaction.

To perform an effective precipitation strike, the reagents are added in the following order. Initially, 19 M NaOH is added, followed by a sufficient amount of 1.0 M $Sr(NO_3)_2$ solution. The resulting solution provides the conditions to precipitate out strontium as $SrCO_3$. Finally, enough 1M $NaMNO_4$ is added to mathematically achieve a 0.05 M MNO_4 solution. The TRU components precipitate out in the floculant. After digestion, the solution is diluted from 6 M to 5 M sodium and to cooled back down to 77 °F through the operation of the chilled water cooling jacket. The cooling and dilution sequences can occur at the same time.

Non-Routine Operations that Could Affect Corrosion/Erosion

None identified.

PLANT ITEM MATERIAL SELECTION DATA SHEET

ISSUED BY
RPP-WTP PDC

R10591497

UFP-VSL-00062-A/B/C (PTF)
Ultrafilter Permeate Collection Vessel

- Design Temperature (°F)(max/min): 120/40
- Design Pressure (psig) (max/min): 15/-10.29
- Location: incell
- PJM Discharge Velocity (fps): 40
- Drive Cycle: 17 % (at 40 fps)

Offspring items

UFP-VSL-00023 – 00025, UFP-VSL-00032 – 00037
UFP-VSL-00072 – 00073, UFP-VSL-00082 – 00084
UFP-VSL-00051, UFP-VSL-00069 -- 00070, UFP-VSL-00075
UFP-PJM-00018 – 00022, UFP-PJM-00039 – 00043
UFP-PJM-00051 – 00052, UFP-PJM-00076 – 00078
UFP-PJM-00070, UFP-PJM-00073, UFP-PJM-00107
UFP-RFD-00027 – 00028, UFP-RFD-00030 – 00034
UFP-RFD-00037 – 00039, UFP-RFD-00042 – 00049

Contents of this document are Dangerous Waste Permit affecting

Operating conditions are as stated on sheets 5 and 6

No maintenance will be performed.

Operating Modes Considered:

- Normal operating conditions are considered.
- The vessel may be cleaned using 2 N HNO_3 with residual chlorides and fluorides at normal operating temperatures; the condition of high temperature and acid is not examined.

Materials Considered:

Material (UNS No.)	Relative Cost	Acceptable Material	Unacceptable Material
Carbon Steel	0.23		X
304L (S30403)	1.00		X
316L (S31603)	1.18	X	
6% Mo (N08367/N08926)	7.64	X	
Alloy 22 (N06022)	11.4	X	
Ti-2 (R50400)	10.1		X

Recommended Material: 316 (max 0.030% C; dual certified)

Recommended Corrosion Allowance: 0.040 inch (includes 0.024 inch corrosion allowance and 0.004 inch erosion allowance)

Process & Operations Limitations:

- Develop rinsing/flushing procedure for acid and water

STEVEN WAKEMAN VAIL
STATE OF WASHINGTON
39250
REGISTERED
PROFESSIONAL ENGINEER
11/17/05
EXPIRES: 12/07/07

Please note that source, special nuclear and byproduct materials, as defined in the Atomic Energy Act of 1954 (AEA), are regulated at the U.S. Department of Energy (DOE) facilities exclusively by DOE acting pursuant to its AEA authority. DOE asserts, that pursuant to the AEA, it has sole and exclusive responsibility and authority to regulate source, special nuclear, and byproduct materials at DOE-owned nuclear facilities. Information contained herein on radionuclides is provided for process description purposes only.

This bound document contains a total of 6 sheets.

REV	DATE	REASON FOR REVISION	PREPARER	CHECKER	APPROVER
2	11/12/05	Issued for Permitting Use			
1	1/23/05	Issued for Permitting Use	DLA	JRD	SWV
0	10/15/04	Issued for Permitting Use	DLA	JRD	SWV

PLANT ITEM MATERIAL SELECTION DATA SHEET

Corrosion Considerations:

Permeate collected in these vessels is sampled and then routed to the CXP system for further treatment. Permeate collected from solids washing is routed to PWD-VSL-00015 or PWD-VSL-000016.

a General Corrosion
Hamner (1981) lists a corrosion rate for 304 (and 304L) in NaOH of less than 20 mpy (500 μm/y) at 77°F and over 20 mpy at 122°F. He shows 316 (and 316L) has a rate of less than 2 mpy up to 122°F and 50% NaOH. Dillon (2000) and Sedriks (1996) both state that the 300 series stainless steels are acceptable in up to 50% NaOH at temperatures up to about 122°F or slightly above. Divine's work (1986) with simulated-radwaste evaporators, six months at 140°F, showed 304L was slightly more resistant to corrosion (<0.2 mpy) than was 316L (<0.6 mpy); Ni 200, pure nickel, was much less resistant (≈7 mpy) probably due to the complexants. Zapp (1998) notes that the Savannah River evaporator vessels, operating at about 300°F, are made of 304L and have suffered no failures in about 30 years; 304L heat transfer surfaces have failed however after about 10 years. Danielson & Pitman (2000), based on short term studies, suggest a corrosion rate of about 0.5 mpy for 316L in simulated waste at boiling, >212°F.

Davis (1994) states the corrosion rate for 304L in pure NaOH will be less than about 0.1 mpy up to about 212°F though Sedriks (1996) states the corrosion rate data beyond about 122°F are too low. Uhlig (1948) has shown that pure nickel is resistant to corrosion by NaOH. However, as Divine (1986) pointed out, the presence of complexing agents may reverse the trend. Agarwal (2000) states that the higher nickel alloys are highly corrosion resistant though specific mention of alkaline media is not made. The general literature mainly discusses cracking problems (see below) rather than uniform corrosion.

The amount of dilution of fluoride during possible acid wash is unknown. Wilding and Paige (1976) have shown that in 5% nitric acid with 1000 ppm fluoride at 290°F, the corrosion rate of 304L can be kept as low as 5 mpy by the use of Al^{+++}. Additionally, Sedriks (1996) has noted with 10% (≈2N) nitric acid and 3,000 ppm fluoride at 158°F, the corrosion rate of 304L is over 4,000 mpy. Therefore, there is a concern about excessive corrosion rates during acid cleaning or should acid be from the Ultrafiltration Feed Vessels. Acid wash should only be performed at normal operating temperatures in order to reduce the extent of attack by chloride (pitting and crevice corrosion) and general corrosion due to fluoride. Properly protected by temperature and fluoride complexants such as Al^{+++}, 304L may be suitable. The more resistant 316L is recommended together with thorough flushing before acid is added.

Conclusion: At temperatures less than about 140°F, 304L is expected to be sufficiently resistant to the waste solution with a probable general corrosion rate of less than 1 mpy. During acid cleaning, in the presence of fluoride, a more resistant alloy may have to be considered unless steps are taken to reduce the effect of the fluoride. Assuming a limited time of exposure to acid and thorough washing, 0.04 inch corrosion allowance is recommended.

b Pitting Corrosion
Chloride is known to cause pitting in acid and neutral solutions. Dillon (2000) is of the opinion that in alkaline solutions, pH>12, chlorides are likely to promote pitting only in tight crevices. Dillon and Koch (1995) are both of the opinion that fluoride will have little effect in an alkaline media. Further, Revie (2000) and Uhlig (1948) note nitrate inhibits chloride pitting.

Normally the vessel is to operate at 86°F. At the normal temperature, based on the work of Zapp (1998) and others, 304L stainless steel would be acceptable in the proposed alkaline conditions. Under acidic or neutral pH conditions, 316L will be more resistant to pitting due to the chloride concentration.

If the vessel were filled with process water and left stagnant, there would be a tendency to pit. The time to initiate would depend on the source of the water, being shorter for filtered river water and longer for DIW. Pitting has been observed in both cases, though much less frequently in DIW. Therefore, controls on washing and rinsing are required.

Conclusion: Localized corrosion, such as pitting, is common but can be mitigated by alloys with higher nickel and molybdenum contents. Based on the expected operating conditions, 304L is expected to be satisfactory. Due to the possibility of acid washes inside the vessels, 316L stainless steel is the minimum recommended.

c End Grain Corrosion
End grain corrosion only occurs in metal with exposed end grains and in highly oxidizing acid conditions.

Conclusion: Possible, but not believed likely in this system.

d Stress Corrosion Cracking
The exact amount of chloride required to cause stress corrosion cracking is unknown. In part this is because the amount varies with temperature, metal sensitization, and the environment. But it is also unknown because chloride tends to concentrate under heat transfer conditions, by evaporation, and electrochemically during a corrosion process. Hence, even as little as 10 ppm can lead to cracking under some conditions. Generally, as seen in Sedriks (1996) and Davis (1987), stress corrosion cracking does not usually occur below about 140°F but this will depend on conditions. Berhardsson et al (1981) suggest that if the chloride concentration is < 50 ppm, temperatures up to 260 are acceptable whereas temperatures should be less than about 75°F if the chloride concentration approaches 1% (10,000 ppm). At the stated temperature and alkaline conditions, either 304L or 316L is expected to be satisfactory.

Conclusion: Because of the normal operating environment as well as that which can occur during off normal conditions, the minimum alloy recommended is a 304L stainless steel.

PLANT ITEM MATERIAL SELECTION DATA SHEET

e Crevice Corrosion
See Pitting.

Conclusion: See Pitting

f Corrosion at Welds
Corrosion at welds is not considered a problem in the proposed environment.

Conclusion: Weld corrosion is not considered a problem for this system.

g Microbiologically Induced Corrosion (MIC)
The proposed operating conditions are not conducive to microbial growth – the temperature is approximately correct but the pH is either too alkaline or too acid. Further, the system is downstream of the main entry points of microbes.

Conclusion: MIC is not considered a problem.

h Fatigue/Corrosion Fatigue
Under the stated operating conditions, corrosion fatigue is a not expected to be a problem in a properly designed vessel.

Conclusions*:* Not considered to be a concern.

i Vapor Phase Corrosion
Not expected to be a concern.

Conclusion: Not a concern.

j Erosion
Based on past experiments by Smith & Elmore (1992), the solids are soft and erosion is not expected to be a concern for the vessel wall. Based on 24590-WTP-RPT-M-04-0008, a general erosion allowance of 0.004 inch is adequate for components with solids content less than 2 wt%. Because of the negligible concentration of undissolved solids, no localized protection is necessary for the applicable portions of the bottom head to accommodate PJM discharge velocities of up to 12 m/s for a usage of 100 % operation as documented in 24590-WTP-M0C-50-00004.

The PJM nozzle requires no additional protection as documented in 24590-WTP-M0C-50-00004.

Conclusion: The recommended corrosion allowance provides sufficient protection for erosion of the vessel.

k Galling of Moving Surfaces
There are no moving surfaces within the vessels.

Conclusion: Not applicable.

l Fretting/Wear
No contacting surfaces are expected.

Conclusion: Not considered a problem.

m Galvanic Corrosion
No dissimilar metals are present.

Conclusion: Not applicable.

n Cavitation
None expected.

Conclusion: Not believed to be of concern.

o Creep
The temperatures are too low to be a concern.

Conclusion: Not applicable.

p Inadvertent Nitric Acid Addition
Higher chloride contents and higher temperatures usually require higher alloy materials. Nitrate ions inhibit the pitting and crevice corrosion of stainless alloys. Furthermore, nitric acid passivates these alloys; therefore, lower pH values brought about by increases in the nitric acid content of process fluid will not cause higher corrosion rates for these alloys. The upset condition that was most likely to occur is lowering of the pH of the vessel content by inadvertent addition of 0.5 M nitric acid. Lowering of pH may make a chloride-containing solution more likely to cause pitting of stainless alloys. Increasing the nitric acid content of the process fluid adds more of the pitting-inhibiting nitrate ion to the process fluid. In addition, adding the nitric acid solution to the stream will dilute the chloride content of the process fluid.

Conclusion: The recommended materials will be able to withstand a plausible inadvertent addition of 0.5 M nitric acid for a limited period.

PLANT ITEM MATERIAL SELECTION DATA SHEET

References:

1. 24590-WTP-M0C-50-00004, Rev. D, *Wear Allowance for WTP Waste Slurry Systems*
2. 24590-WTP-RPT-M-04-0008, Rev. 2, *Evaluation Of Stainless Steel Wear Rates In WTP Waste Streams At Low Velocities*
3. 24590-WTP-RPT-PR-04-0001, Rev. B, *WTP Process Corrosion Data*
4. CCN 130172, Divine, JR, 1986, Letter to A.J. Diliberto, *Reports of Experimentation*, Battelle, Pacific Northwest Laboratories, Richland, WA 99352
5. CCN 130173, Dillon, CP (Nickel Development Institute), Personal Communication to J R Divine (ChemMet, Ltd., PC), 3 Feb 2000.
6. Agarwal, DC, *Nickel and Nickel Alloys*, In: Revie, WW, 2000. *Uhlig's Corrosion Handbook*, 2nd Edition, Wiley-Interscience, New York, NY 10158
7. Berhardsson, S, R Mellstrom, and J Oredsson, 1981, *Properties of Two Highly corrosion Resistant Duplex Stainless Steels*, Paper 124, presented at Corrosion 81, NACE International, Houston, TX 77218
8. Danielson, MJ & SG Pitman, 2000, *Corrosion Tests of 316L and Hastelloy C-22 in Simulated Tank Waste Solutions*, PNWD-3015 (BNFL-RPT-019, Rev 0), Pacific Northwest Laboratory, Richland WA.
9. Davis, JR (Ed), 1987, *Corrosion, Vol 13*, In "Metals Handbook", ASM International, Metals Park, OH 44073
10. Davis, JR (Ed), 1994, *Stainless Steels*, In ASM Metals Handbook, ASM International, Metals Park, OH 44073
11. Hamner, NE, 1981, *Corrosion Data Survey*, Metals Section, 5th Ed, NACE International, Houston, TX 77218
12. Koch, GH, 1995, *Localized Corrosion in Halides Other Than Chlorides*, MTI Pub No. 41, Materials Technology Institute of the Chemical Process Industries, Inc, St Louis, MO 63141
13. Revie, WW, 2000. *Uhlig's Corrosion Handbook*, 2nd Edition, Wiley-Interscience, New York, NY 10158
14. Sedriks, AJ, 1996, *Corrosion of Stainless Steels*, John Wiley & Sons, Inc., New York, NY 10158
15. Smith, H. D. and M. R. Elmore, 1992, *Corrosion Studies of Carbon Steel under Impinging Jets of Simulated Slurries of Neutralized Current Acid Waste (NCAW) and Neutralized Cladding Removal Waste (NCRW)*, PNL-7816, Pacific Northwest Laboratory, Richland, Washington.
16. Uhlig, HH, 1948, *Corrosion Handbook*, John Wiley & Sons, New York, NY 10158
17. Zapp, PE, 1998, *Preliminary assessment of Evaporator Materials of Construction*, BNF—003-98-0029, Rev 0, Westinghouse Savannah River Co., Inc for BNFL Inc.

Bibliography:

1. CCN 130170, Blackburn, LD to PG Johnson, Internal Memo, Westinghouse Hanford Co, *Evaluation of 240-AR Chloride Limit*, August 15, 1991.
2. CCN 130171, Ohl, PC to PG Johnson, Internal Memo, Westinghouse Hanford Co, *Technical Bases for Cl- and pH Limits for Liquid Waste Tank Cars*, MA: PCO:90/01, January 16, 1990.
3. Jones, RH (Ed.), 1992, *Stress-Corrosion Cracking*, ASM International, Metals Park, OH 44073
4. Phull, BS, WL Mathay, & RW Ross, 2000, *Corrosion Resistance of Duplex and 4-6% Mo-Containing Stainless Steels in FGD Scrubber Absorber Slurry Environments*, Presented at Corrosion 2000, Orlando, FL, March 26-31, 2000, NACE International, Houston TX 77218.
5. Van Delinder, LS (Ed), 1984, *Corrosion Basics*, NACE International, Houston, TX 77084

PLANT ITEM MATERIAL SELECTION DATA SHEET

PROCESS CORROSION DATA SHEET

Component(s) (Name/ID #) Ultrafilter permeate collection vessel (UFP-VSL-00062A/B/C)

Facility PTF

In Black Cell? Yes

Chemicals	Unit[1]	Contract Maximum		Non-Routine		Notes
		Leach	No leach	Leach	No Leach	
Aluminum	g/l	3.15E+01	3.17E+01			
Chloride	g/l	1.21E+01	1.45E+01			
Fluoride	g/l	1.44E+01	1.73E+01			
Iron	g/l	2.31E+00	2.60E+00			
Nitrate	g/l	2.23E+02	2.59E+02			
Nitrite	g/l	6.69E+01	8.01E+01			
Phosphate	g/l	4.83E+01	5.66E+01			
Sulfate	g/l	2.57E+01	3.08E+01			
Mercury	g/l	7.47E-02	1.94E-02			
Carbonate	g/l	9.03E+01	9.93E+01			
Undissolved solids	wt%					
Other (NaMnO4, Pb,...)	g/l					
Other	g/l					
pH	N/A					Note 3
Temperature	°F					Note 2

List of Organic Species:

References

System Description: 24590-PTF-3YD-UFP-00001, Rev 0
Mass Balance Document: 24590-WTP-M4C-V11T-00005, Rev A
Normal Input Stream #: UFP17, UFP33
Off Normal Input Stream # (e.g., overflow from other vessels): N/A
P&ID: 24590-PTF-M6-UFP-P0004, Rev 1
PFD: 24590-PTF-M5-V17T-P0011, Rev 0
Technical Reports: N/A

Notes:

1. Concentrations less than 1x10^{-4} g/l do not need to be reported; list values to two significant digits max.
2. T normal operation 77 °F to max 86 °F (24590-PTF-MVC-UFP-00003, Rev 0)
3. Alkaline pH approximately 12 to 14

Assumptions:

4.14.4 Ultrafilter Permeate Collection Vessel (UFP-VSL-00062 A/B/C)

Routine Operations

Permeate collected in the ultrafilter permeate vessels (UFP-VSL-00062A/B/C) is sampled and then routed to the cesium ion exchange process system (CXP) for further treatment. The permeate collected from solids washing is routed to the acidic/alkaline effluent vessels (PWD-VSL-00015/00016). If necessary, the permeate routed to the CXP system may be diluted with process condensate prior to transferring to meet the 5 M sodium design basis requirement (SpG ~1.25).

Non-Routine Operations that Could Affect Corrosion/Erosion

Off-specification permeate (excessive turbidity) can be routed back to either of the ultrafilter feed preparation vessels (UFP-VSL-00001A/B).

Attachment 51 – Appendix 8.10
Pretreatment Building
Critical Systems Equipment/Instrument List

Where information regarding treatment, management, and disposal of the radioactive source, byproduct material, and/or special nuclear components of mixed waste (as defined by the Atomic Energy Act of 1954, as amended) has been incorporated into this permit, it is not incorporated for the purpose of regulating the radiation hazards of such components under the authority of this permit and chapter 70.105 RCW. In the event of any conflict between Permit Condition III.10.A. and any statement relating to the regulation of source, special nuclear, and byproduct material contained in portions of the permit application that are incorporated into this permit, Permit Condition III.10.A. will prevail.

Additional appendices will be added to this appendix as new information is incorporated into this permit.

Drawings and Documents

Attachment 51 – Appendix 8.10
Pretreatment Building
Critical Systems Equipment/Instrument List

The following drawings have been incorporated into Appendix 8.10 and can be viewed at the Ecology Richland Office. **New drawings are in bold lettering**.

Drawing/Document Number	**Description**
	PTF Equipment Room List @ El 0
	PTF Equipment Room List @ El +19 and +28
RESERVED	RESERVED

PTF Building
Room and Equipment List: 0 Foot - With Sumps

Reference Drawing: 24590-PTF-P1-P01T-P0006

P-B002	**HLW Drain Vessel Pit**	
PWD-SUMP-00040	Sump	Plant Wash & Disposal System
PWD-VSL-00043	Vessel	Plant Wash & Disposal System
P-B003	**Overflow Vessel Pit**	
PWD-VSL-00035	Vessel	Plant Wash & Disposal System
P-B005	**C2/C3 Drain tank Room**	
PWD-PMP-00026	Pump	Plant Wash & Disposal System
PWD-SUMP-00071	Sump	Plant Wash & Disposal System
PWD-VSL-00046	Vessel	Plant Wash & Disposal System
PWD-PMP-00024A	Pump	Plant Wash & Disposal System
PWD-PMP-00024B	Pump	Plant Wash & Disposal System
P-0101	**LVL - SE Bulge Area**	
PJV-BULGE_00001	Bulge	Pulse Jet Ventilation System
P-0101A	**LVL - SE Bulge Area**	
PVP-BULGE-00002	Bulge	Pretreatment Vessel Vent Process System
P-0102	**HLW Receipt/Storage/Blending Cell**	
PWD-SUMP-00006	Sump	Plant Wash & Disposal System
HLP-VSL-00027A	Vessel	HLW Lag Storage & Feed Blending System
HLP-VSL-00027B	Vessel	HLW Lag Storage & Feed Blending System
PVP-VSL-00002	Vessel	Pretreatment Vessel Vent Process System
P-0102A	**HLW Receipt/Storage/Blending Cell**	
HLP-VSL-00022	Vessel	HLW Lag Storage & Feed Blending System
HLP-VSL-00028	Vessel	HLW Lag Storage & Feed Blending System
PVP-VSL-00001	Vessel	Pretreatment Vessel Vent Process System
PWD-SUMP-00005	Sump	Plant Wash & Disposal System
P-0104	**Ultra Filtration Cell**	
UFP-VSL-00001B	Vessel	Ultrafiltration Process System
UFP-VSL-00002A	Vessel	Ultrafiltration Process System
UFP-VSL-00002B	Vessel	Ultrafiltration Process System
UFP-VSL-00062C	Vessel	Ultrafiltration Process System
PWD-VSL-00044	Vessel	Plant Wash & Disposal System
PWD-SUMP-00004	Sump	Plant Wash & Disposal System
PVP-SCB-00002	Scrubber	Pretreatment Vessel Vent Process System
P-0105	**LVL 1SE Bulge Area**	
PVP-BULGE-00001	Bulge	Pretreatment Vessel Vent Process System

P-0105B	**LVL 1SW Bulge Area**	
FEP-VSL-00005	Vessel	Waste Feed Evaporation Process System
P-0106	**Feed Evaporator/Ultra Filtration Cell**	
FEP-SEP-00001A	Seperator	Waste Feed Evaporation Process System
FEP-SEP-00001B	Seperator	Waste Feed Evaporation Process System
UFP-VSL-00001A	Vessel	Ultrafiltration Process System
FEP-VSL-00001A	Vessel	Waste Feed Evaporation Process System
FEP-VSL-00017A	Vessel	Waste Feed Evaporation Process System
FEP-VSL-00017B	Vessel	Waste Feed Evaporation Process System
UFP=VSL-00062A	Vessel	Ultrafiltration Process System
UFP-VSL-00062B	Vessel	Ultrafiltration Process System
PWD-SUMP-00003	Sump	Plant Wash & Disposal System
P-0108	**Feed Receipt Cell**	
FRP-VSL-00002A	Vessel	Waste Receipt Process System
PWD-SUMP-00002A	Sump	Plant Wash & Disposal System
P-0108A	**Feed Receipt Cell**	
FRP-VSL-00002B	Vessel	Waste Receipt Process System
PWD-SUMP-00002	Sump	Plant Wash & Disposal System
P-0108B	**Feed Receipt Cell**	
FRP-VSL-00002C	Vessel	Waste Receipt Process System
PWD-SUMP-00001	Sump	Plant Wash & Disposal System
P-0108C	**Feed Receipt Cell**	
FRP-VSL-00002D	Vessel	Waste Receipt Process System
PWD-SUMP-00001A	Sump	Plant Wash & Disposal System
P-0109	**Acidic/Alkaline Effluent Collection Cell**	
PWD-VSL-00015	Vessel	Plant Wash & Disposal System
PWD-VSL-00016	Vessel	Plant Wash & Disposal System
PWD-SUMP-00007	Sump	Plant Wash & Disposal System
P-0110A	**LVL 1NW Bulge Area**	
TEP-BULGE-00010	Bulge	Technetium Eluant Recovery Process System
TEP-BULGE-00006	Bulge	Technetium Eluant Recovery Process System
TEP-BULGE-00007	Bulge	Technetium Eluant Recovery Process System
P-0110B	**LVL 1NW Bulge Area**	
TXP-BULGE-00001	Bulge	Technetium Ion Exchange Process System
P-0110C	**LVL 1NW Bulge Area**	
TXP-BULGE-00004	Bulge	Technetium Ion Exchange Process System

TXP-BULGE-00031	Bulge	Technetium Ion Exchange Process System
TXP-BULGE-00005	Bulge	Technetium Ion Exchange Process System
P-0111	**CS IX Cell**	
PWD-SUMP-00008	Sump	Plant Wash & Disposal System
CXP-VSL-00004	Vessel	Cesium Ion Exchange Process System
CXP-VSL-00003	Vessel	Cesium Ion Exchange Process System
CXP-VSL-00001	Vessel	Cesium Ion Exchange Process System
CNP-VSL-00002	Vessel	Cesium Nitric Acid Recovery Process System
P-0112	**CS TC Effluent Recovery Cell**	
PWD-SUMP-00009	Sump	Plant Wash & Disposal System
RDP-VSL-00002A	Vessel	Spent Resin Collection & Dewatering Process System
RDP-VSL-00002B	Vessel	Spent Resin Collection & Dewatering Process System
CNP-VSL-00001	Vessel	Cesium Nitric Acid Recovery Process System
CNP-VSL-00004	Vessel	Cesium Nitric Acid Recovery Process System
TEP-VSL-00004	Vessel	Technetium Eluant Recovery Process System
CNP-VSL-00002	Vessel	Cesium Nitric Acid Recovery Process System
TEP-VSL-00006	Vessel	Technetium Eluant Recovery Process System
TEP-VSL-00005	Vessel	Technetium Eluant Recovery Process System
P-0113	**TC IX Feed Cell**	
PWD-SUMP-00010	Sump	Plant Wash & Disposal System
TXP-VSL-00011	Vessel	Technetium Ion Exchange Process System
P-0114	**TC IX Cell**	
PWD-SUMP-00011	Sump	Plant Wash & Disposal System
TXP-VSL-00004A	Vessel	Technetium Ion Exchange Process System
TXP-VSL-00004B	Vessel	Technetium Ion Exchange Process System
TXP-VSL-00004C	Vessel	Technetium Ion Exchange Process System
TXP-VSL-00003	Vessel	Technetium Ion Exchange Process System
P-0116	**Treated LAW Feed Cell**	
N/A	N/A	No regulated equipment
P-0117	**LVL 1NE Sub-Change Room**	
PWD-SUMP-00012	Sump	Plant Wash & Disposal System
TLP-SEP-00001	Seperator	Treated LAW Evaporation Process System
TLP-VSL-00009A	Vessel	Treated LAW Evaporation Process System
P-0117A	**LVL 1NE Sub-Change Room**	
PWD-SUMP-00013	Sump	Plant Wash & Disposal System
TLP-VSL-00009B	Vessel	Treated LAW Evaporation Process System

TLP-VSL-00001	Vessel	Treated LAW Evaporation Process System
P-0118	**Alkaline Effluant Collection Cell**	
TLP-VSL-00002	Vessel	Treated LAW Evaporation Process System
TLP-PMP-00002A	Pump	Treated LAW Evaporation Process System
TLP-PMP-00002B	Pump	Treated LAW Evaporation Process System
RLD-VSL-00017A	Vessel	Radioactive Liquid Waste Disposal System
RLD-VSL-00017B	Vessel	Radioactive Liquid Waste Disposal System
PMP-SUMP-00036	Sump	Plant Wash & Disposal System
RLD-PMP-00005A	Pump	Radioactive Liquid Waste Disposal System
RLD-PMP-00005B	Pump	Radioactive Liquid Waste Disposal System
P-0119	**Spent Resin Receipt**	
PWD-SUMP-00031	Sump	Plant Wash & Disposal System
RDP-VSL-00004	Vessel	Spent Resin Collection & Dewatering Process System
RDP-PMP-00011	Pump	Spent Resin Collection & Dewatering Process System
P-0122A	**Contact Decon Maintenance Airlock**	
P-0123	**Hot Cell**	
CXP-IXC-00001	Ion Exchange	Cesium Ion Exchange Process System
CXP-IXC-00002	Ion Exchange	Cesium Ion Exchange Process System
CXP-IXC-00003	Ion Exchange	Cesium Ion Exchange Process System
CXP-IXC-00004	Ion Exchange	Cesium Ion Exchange Process System
CXP-HX-00001A	Heat Exchanger	Cesium Ion Exchange Process System
CXP-HX-00001B	Heat Exchanger	Cesium Ion Exchange Process System
CXP-PMP-00001A	Pump	Cesium Ion Exchange Process System
CXP-PMP-00001B	Pump	Cesium Ion Exchange Process System
CNP-HX-00001	Heat Exchanger	Cesium Nitric Acid Recovery Process System
TEP-HX-00001	Heat Exchanger	Technetium Eluant Recovery Process System
RDP-PMP-00008A	Pump	Spent Resin Collection & Dewatering Process System
RDP-PMP-00008B	Pump	Spent Resin Collection & Dewatering Process System
TXP-IXC-00001	Ion Exchange	Technetium Ion Exchange Process System
TXP-IXC-00002	Ion Exchange	Technetium Ion Exchange Process System
TXP-IXC-00003	Ion Exchange	Technetium Ion Exchange Process System
TXP-IXC-00004	Ion Exchange	Technetium Ion Exchange Process System
UFP-PP-00003A	Pulse Pot	Ultrafiltration Process System
TLP-RBLR-00001	Reboiler	Treated LAW Evaporation Process System
TLP-PMP-00011A	Pump	Treated LAW Evaporation Process System
TLP-PMP-00011B	Pump	Treated LAW Evaporation Process System

UFP-FILT-00001A	Filter	Ultrafiltration Process System
UFP-FILT-00002A	Filter	Ultrafiltration Process System
UFP-FILT-00003A	Filter	Ultrafiltration Process System
UFP-FILT-00001B	Filter	Ultrafiltration Process System
UFP-FILT-00002B	Filter	Ultrafiltration Process System
UFP-FILT-00003B	Filter	Ultrafiltration Process System
TLP-PMP-00005A	Pump	Treated LAW Evaporation Process System
TLP-PMP-00005B	Pump	Treated LAW Evaporation Process System
TCP-PMP-00001A	Pump	Treated LAW Concentrated Storage Process System
TCP-PMP-00001B	Pump	Treated LAW Concentrated Storage Process System
HLP-PMP-00017A	Pump	HLW Lag Storage & Feed Blending System
HLP-PMP-00017B	Pump	HLW Lag Storage & Feed Blending System
HLP-PMP-00019A	Pump	HLW Lag Storage & Feed Blending System
HLP-PMP-00019B	Pump	HLW Lag Storage & Feed Blending System
HLP-PMP-00021	Pump	HLW Lag Storage & Feed Blending System
UFP-PP-00003B	Pulse Pot	Ultrafiltration Process System
UFP-PMP-00042A	Pump	Ultrafiltration Process System
UFP-PMP-00042B	Pump	Ultrafiltration Process System
UFP-PP-00001A	Pulse Pot	Ultrafiltration Process System
UFP-PMP-00041A	Pump	Ultrafiltration Process System
UFP-PMP-00041B	Pump	Ultrafiltration Process System
FEP-PMP-00008A	Pump	Waste Feed Evaporation Process System
FEP-PMP-00008B	Pump	Waste Feed Evaporation Process System
FEP-PMP-00009A	Pump	Waste Feed Evaporation Process System
FEP-PMP-00009B	Pump	Waste Feed Evaporation Process System
FEP-RBLR-00001A	Reboiler	Waste Feed Evaporation Process System
FEP-RBLR-00001B	Reboiler	Waste Feed Evaporation Process System
PWD-SUMP-00026	Sump	Plant Wash & Disposal System
PWD-SUMP-00028	Sump	Plant Wash & Disposal System
FEP-PMP-00007A	Pump	Waste Feed Evaporation Process System
FEP-PMP-00007B	Pump	Waste Feed Evaporation Process System
FRP-PMP-00001	Pump	Waste Feed Receipt Process System
FRP-PMP-00002A	Pump	Waste Feed Receipt Process System
FRP-PMP-00002B	Pump	Waste Feed Receipt Process System
P-0123A	**Remote Decon Maintenance Cave**	
PWD-SUMP-00033	Sump	Plant Wash & Disposal System

PWD-SUMP-00032	Sump	Plant Wash & Disposal System
P-0124	**Filter Cask Airlock**	
P-0124A	**Filter Cask Area**	
P-0124B	**Filter Cask Area**	
P-0124C	**Filter Cask Area**	
P-0125	**MSM Decon/Maintenance**	
P-0125A	**C3 Workshop**	
P-0128	**Interim Storage**	
P-0128A	**Storage**	

PTF Building Room and Equipment List
for El. +19' and + 28'

Room Number	Room Description	Equipment Number	Equipment Description
PM0124	Containment Building Area - Hot Cell Crane Maintenance Area (El. 19')	N/A	N/A
P-0201	Lvl 2 SE Process Bulge Area	N/A	Does not contain any regulated vessels or major components, but does contain regulated ancillary equipment (valves, piping, etc.).
P-0201A	Lvl 2 SE Process Bulge Area	N/A	Does not contain any regulated vessels or major components, but does contain regulated ancillary equipment (valves, piping, etc.).
P-0203	Lvl 2 SW Process Bulge Area	N/A	Does not contain any regulated vessels or major components, but does contain regulated ancillary equipment (valves, piping, etc.).
P-0203A	Lvl 2 SW Process Bulge Area	N/A	Does not contain any regulated vessels or major components, but does contain regulated ancillary equipment (valves, piping, etc.).
P-0203B	Lvl 2 SW Process Bulge Area	N/A	Does not contain any regulated vessels or major components, but does contain regulated ancillary equipment (valves, piping, etc.).
P-0204	Lvl 2 SW Inbleed Area	N/A	Does not contain any regulated vessels or major components, but does contain regulated ancillary equipment (valves, piping, etc.).
P-0206	Lvl 2 NW Process Bulge Area	N/A	Does not contain any regulated vessels or major components, but does contain regulated ancillary equipment (valves, piping, etc.).
P-0207	Lvl 2 NW Process Bulge Area	CNP-BULGE-00008	CNP Process Bulge
P-0208	Lvl 2 NW Process Bulge Area	N/A	Does not contain any regulated vessels or major components, but does contain regulated ancillary equipment (valves, piping, etc.).
P-0209	Lvl 2 N Process Bulge Area	N/A	Does not contain any regulated vessels or major components, but does contain regulated ancillary equipment (valves, piping, etc.).
P-0210	Lvl 2 N Inbleed Area	N/A	Does not contain any regulated vessels or major components, but does contain regulated ancillary equipment (valves, piping, etc.).
P-0212	Lvl 2 NE Process Bulge Area	N/A	Does not contain any regulated vessels or major components, but does contain regulated ancillary equipment (valves, piping, etc.).
P-0223	Containment Building Area - Spent Filter Drum Handling Area	N/A	N/A