93-028

0031550

Date Received: 4-30-93 DS

INFORMATION RELEASE REQUEST

Reference: WHC-CM-3-4

Complete for all Types of Release

Purpose

[] Speech or Presentation
- [] Full Paper
- [] Summary
- [] Abstract
- [] Visual Aid

(Check only one suffix)

[] Speakers Bureau
[] Poster Session
[] Videotape

[] Reference
[X] Technical Report
[] Thesis or Dissertation
[] Manual
[] Brochure/Flier
[] Software/Database
[] Controlled Document
[] Other

ID Number (include revision, volume, etc.): WHC-SD-WM-TI-554 Rev 0

List attachments: EDT 140974

Date Release Required: May 4, 1993

Title: B-Plant Exhaust Filter Outlet Seals

Unclassified Category:

Impact Level: 2ES Q

New or novel (patentable) subject matter? [X] No [] Yes
If "Yes", has disclosure been submitted by WHC or other company?
[] No [] Yes Disclosure No(s).

Information received from others in confidence, such as proprietary data, trade secrets, and/or inventions?
[X] No [] Yes (Identify)

Copyrights? [X] No [] Yes
If "Yes", has written permission been granted?
[] No [] Yes (Attach Permission)

Trademarks?
[X] No [] Yes (Identify)

Complete for Speech or Presentation

Title of Conference or Meeting:

Group or Society Sponsoring:

Date(s) of Conference or Meeting:

City/State:

Will proceedings be published? [] Yes [] No
Will material be handed out? [] Yes [] No

Title of Journal:

CHECKLIST FOR SIGNATORIES

Review Required per WHC-CM-3-4	Yes	No	Reviewer - Signature Indicates Approval: Name (printed)	Signature	Date
Classification/Unclassified Controlled Nuclear Information	[]	[X]			
Patent - General Counsel	[X]	[]			
Legal - General Counsel	[X]	[]	B. D. Williamson	per telecon LS. Semmens	4/30/93
Applied Technology/Export Controlled Information or International Program	[]	[X]			
WHC Program/Project	[X]	[]	W. W. Bowen	W W Bowen	4/30/93
Communications	[]	[X]			
RL Program/Project	[]	[X]			
Publication Services	[X]	[]	L. Orgill	per telecon LS. Semmens	4/30/93
Other Program/Project	[]	[X]			

Information conforms to all applicable requirements. The above information is certified to be correct.

	Yes	No
References Available to Intended Audience	[X]	[]
Transmit to DOE-HQ/Office of Scientific and Technical Information	[]	[X]

Author/Requestor (Printed/Signature) Date
Lynn S. Semmens Lynn S Semmens 4/30/93

Intended Audience
[] Internal [] Sponsor [X] External

Responsible Manager (Printed/Signature) Date
A. L. Ramble 4/30/93

INFORMATION RELEASE ADMINISTRATION APPROVAL STAMP

Stamp is required before release. Release is contingent upon resolution of mandatory comments.

FOR RELEASE NS 4-30-93

OCT 1993 RECEIVED EDMC

Date Cancelled:

Date Disapproved:

WHC-SD-WM-TI-554 Rev 0

ID Number

Lead Author	Phone	MSIN	Other Author(s) or Requestor
R. M. Marusich	6-8081	H4-60	

Project or Program	Lead Org Code	Sponsor Agency (DOE, DOT, NRC, USGS, etc.)
B-Plant	29000	DOE

Editor	Phone	MSIN	DOE/HQ Program (DP, EH, EM, NE, etc.)
A. Orale			

Mandatory Comments (Only mandatory comments are to be documented. All other comments should be made on a copy of the information submitted for review and returned to the author.)	Reviewer Name & Signature	Date	Resolution	Reviewer Name & Signature	Date

Legends/Notices/Markings (required per WHC-CM-3-4 or guidance organization.) (Reviewer initials)

	Affix Yes	Affix No		Affix Yes	Affix No
Applied Technology	[ ]	[ ]	Predecisional Information	[ ]	[ ]
Business-Sensitive Information	[ ]	[ ]	Programmatic Notice		
Computer Software Notice	[ ]	[ ]	Proprietary Information	[ ]	[ ]
Copyright License Notice	[ ]	[ ]	Purpose and Use	[ ]	[✓]
Export Controlled Information	[ ]	[ ]	Thesis/Dissertation	[ ]	[ ]
Legal Disclaimer	[✓]	[ ]	Trademark Disclaimer	[ ]	[ ]
Limited Disclosure	[ ]	[ ]	Unclassified Controlled Nuclear Information/Official Use Only	[ ]	[ ]
Patent Status	[ ]	[✓]			

Responsible Manager (Printed/Signature)

Additional Information

BD-7600-062 (08/91) WEF074

Part 2

SUPPORTING DOCUMENT

1. Total Pages 111

2. Title

B-Plant Exhaust Filter Outlet Seals

3. Number WHC-SD-TI-554 3/17/93

4. Rev No. 0

5. Key Words

B Plant, HEPA Filters, Seals

APPROVED FOR PUBLIC RELEASE

6. Author

Name: R. M. Marusich

Robert M Marusich

Signature

29000/D6101

Organization/Charge Code

7. Abstract

4/30/93 N. Soles

In this report, the accidents in which the outlet seals for the A, B, and C exhaust filters could open are identified and the consequences of the opening is quantified.

8. PURPOSE AND USE OF DOCUMENT - This document was prepared for use within the U.S. Department of Energy and its contractors. It is to be used only to perform, direct, or integrate work under U.S. Department of Energy contracts. This document is not approved for public release until reviewed.

PATENT STATUS - This document copy, since it is transmitted in advance of patent clearance, is made available in confidence solely for use in performance of work under contracts with the U.S. Department of Energy. This document is not to be published nor its contents otherwise disseminated or used for purposes other than specified above before patent approval and such release or use has been secured, upon request, from the Patent Counsel, U.S. Department of Energy Field Office, Richland, WA.

DISCLAIMER - This report was prepared as an account of work sponsored by an agency of the United States Government. Neither the United States Government nor any agency thereof, nor any of their employees, nor any of their contractors, subcontractors or their employees, makes any warranty, express or implied, or assumes any legal liability or responsibility for the accuracy, completeness, or any third party's use or the results of such use of any information, apparatus, product, or process disclosed, or represents that its use would not infringe privately owned rights. Reference herein to any specific commercial product, process, or service by trade name, trademark, manufacturer, or otherwise, does not necessarily constitute or imply its endorsement, recommendation, or favoring by the United States Government or any agency thereof or its contractors or subcontractors. The views and opinions of authors expressed herein do not necessarily state or reflect those of the United States Government or any agency thereof.

9. Impact Level 2ESQ

10. RELEASE STAMP

Sponsor Limited

OFFICIAL RELEASE BY WHC 42

DATE MAR 17 1993

Stall

CONTENTS

1.0 BACKGROUND 1-1
1.1 INFORMATION AND DATA 1-1
1.2 DISCUSSION 1-1

2.0 HAZARDS IDENTIFICATION 2-1

3.0 ACCIDENT SCENARIOS 3-1
3.1 FAILURE TO REFILL THE OUTLET SEALS 3-1
3.2 INADVERTENT JETTING OF THE OUTLET SEAL 3-2

4.0 QUANTITY RELEASED 4-1
4.1 RADIATION DAMAGE TO FILTERS 4-1
4.2 RELEASE FRACTIONS--FILTER MEDIA INTACT 4-1
4.3 QUANTITY RELEASED DUE TO A HOLE IN THE FILTER 4-2
4.4 RELEASE FRACTION--FILTER MEDIA COLLAPSES 4-2
4.5 QUANTITY RELEASED 4-4

5.0 EVENT PROBABILITY 5-1

6.0 DOSE CONSEQUENCES AND RISK ACCEPTANCE 6-1
6.1 POTENTIAL ADDITIONAL RELEASE AS A RESULT OF FLOODING OF A FILTER CELL 6-2

7.0 REFERENCES 7-1

APPENDIXES:

A. REVISED 291B FILTER INVENTORIES A-1
B. B PLANT FILTER PROBLEMS B-1
C. REVISED INVENTORY ESTIMATES FOR B PLANT UNREVIEWED SAFETY QUESTION C-1
D. EVAPORATION OF THE WATER SEAL D-1
E. MAXIMUM VELOCITY THROUGH A HOLE E-1
F. FILTER CELL CURIE LOADING FOUND FROM THE FLOODING OF A FILTER F-1
G. DRAWINGS AND SCHEMATICS G-1
H. DOSE CONSEQUENCES FROM UNIT RELEASES H-1

ACRONYMS

AIChE	American Institute of Chemical Engineers
DOP	detailed operating procedure
EDE	effective dose equivalent
HEPA	high-efficiency particulate air
SAR	safety analysis report
USQ	unreviewed safety question

B PLANT--OUTLET SEALS FOR A, B, AND C FILTERS

1.0 BACKGROUND

1.1 INFORMATION AND DATA

Appendix A contains a letter from John Gehrke providing preliminary estimates of the A, B, and C filter inventories. Appendix B contains a letter from B. C. Mehta describing potential damage to the C filter. Appendix C provides a letter from John Gehrke providing the revised estimates of the A, B, and C filter loadings based on the A filter flooding incident. Appendixes D and E provide calculations necessary to the report. Appendix F provides a sensitivity study of the radiation doses to the onsite and offsite individuals as a function of the information in Appendix A and C. Appendix G provides sketches of the filters for use in determining the hazards. Appendix H provides the doses from the GENII analysis for use in determining risk acceptability.

1.2 DISCUSSION

The concern of the unreviewed safety question (USQ) is that the safety analysis report (SAR) does not address the contribution of potentially weakened high-efficiency particulate air (HEPA) filter elements (in the A, B and C filters) to the likelihood or consequences of an accident. The exhaust filter outlet water seals constitute an additional barrier to release, therefore, the occurrence reports have focused on the risk of draining those seals. This report will cover in detail the accidents involving the outlet seals and will list other potential accidents involving A, B, and C filters that may need further study.

This page intentionally left blank.

2.0 HAZARDS IDENTIFICATION

The following list of hazards are developed from the information in Appendix G and discussions with B Plant personnel.

- Failure to refill the outlet seals
- Inadvertent jetting of an outlet seal
- Pressure differential across the filter compartment blows open the outlet seals
- Seismic event fails the outlet seals while leaving the ventilation flow intact.

Other possible hazards with regards to the A, B, and C filters are as follows:

- Seismic event fails the filter housing structure.
- Ventilation upset, fire, tornado, explosion, or gross failure of a number of filters results in increased turbulence within A-C filters. The turbulence could suspend and entrain contamination and transport it to the normal flow path (outlet seals remain intact and full).
- Inlet water seal or outlet water seal to D filter closed. Air flow overwhelms outlet seals to the A-C filters.

Considering the first list, the hazard "differential pressure across the housing" is not credible. The outlet seals are maintained filled at a minimum 12 in. of water. In other words, the pressure differential across the seal would have to rise to at least 12 in. of water before air flow could begin to flow through the filter. The normal pressure drop across the exhaust filters is approximately 1.5 in. of water. At this time, the exhaust fans produce a differential of 10-12 in. of water. If all of the air flow through all the filters were blocked, the maximum differential pressure would be 20 in. of water, an increase of 8-10 in. If this increase were added to the normal differential, the 12-in. minimum water seal would be adequate. The supply fan pressure drop and capacity is much less. The supply fans will be shut off, if the filters completely plug, to prevent pressurizing the canyon. The combination of exhaust and supply flow may result in a pressure differential greater than 12 in., if the supply fans are not shut off when the canyon goes positive. This will result in the gradual opening of the water seal. The effect is covered below under Section 3.1, "Failure to Refill the Outlet Seals."

From the second list, the consequences of the "increased turbulence" and the "closed inlet and outlet seal on D filter" accidents are negligible. Even if turbulence were able to carry some contamination into the normal air stream, the air stream would be filtered by the D filter before release out of the stack. The onsite dose from stack releases is very small due to the height of the plume.

A pressure pulse resulting from a canyon explosion will be very small at the filters due to travel from the cell through 14- to 12-in. holes into the air tunnel and three 90-degree turns between the cell exterior and the filters. The air flow resulting from a canyon fire will be cooled due to expansion during travel between the canyon and the filters and the cooling effect of the concrete within the air tunnel.

The effect of a seismic event is being evaluated. The results will be available later in fiscal year 1994.

3.0 ACCIDENT SCENARIOS

The remaining hazards include the following:

- Failure to refill the outlet seals
- Inadvertent jetting of an outlet seal.

3.1 FAILURE TO REFILL THE OUTLET SEALS

Each outlet seal is provided with a level indicator and a level alarm. The indicator and alarm operate from the same pair of impulse tubing but use independent transmitters. This is evidenced by the fact that the alarm sounds at times when the indicated level is still above the alarm setting. The level instrument senses the difference in pressure between a reference point above the seal and a tube purged by a small air flow whose outlet is at the bottom of the seal. The readout is in inches of water.

The operators read the level indicators each shift. A form is filled out that shows the maximum and minimum levels allowed and the space for that shift's reading. The form is signed by the shift manager. Evaporation of the water seals would require about 6 months (Appendix D). At this time, the water seals would open slightly, allowing a small amount of flow through the filters.

We assume that the minimum flow area to D filter is 50 ft^2, and that the flow split is proportional to the area, a 1-in. opening in the water seal for A-C filters would result in about 10 percent of the flow going through A-C filters and 90 percent through D filter. It would take about 8 days for a 1-in. opening to develop. A flow rate of 10 percent of 35,000 ft^3/min divided among three filters would be insufficient to fail the filters as the flow velocity would be very low. The effect of different initial levels in each seal resulting in only one filter bank being opened will be covered in the next scenario.

The accident scenario could occur in many different sequences.

1. In the first scenario, the operators fail to read the level indicators for long periods of time. The shift manager and instrument cognizant engineer fail to realize that the operators have not read the indicator. The level drops to the alarm point. The control room operator acknowledges the alarm but fails to give notice to the process operator that there is a problem. The shift manager and cognizant engineer fail to review the alarm summary on the alarm panel.

2. The second scenario starts in the same manner as the first, but instead of the control room operator failing to give notice of an alarm, there is a failure in the alarm instrument loop that results in no alarm being indicated.

3. In the third scenario, a failure occurs in the level indication instrument loop that results in a constant level reading. When the

level drops to the alarm point, the control room operator fails to notify the process operator of the alarm, or the alarm loop fails.

4. The fourth scenario is the same as the third, but the control room operator notifies the process operator. The process operator goes to the level indicator to see if the sump must be filled. The level reads normal, so the process operator does nothing.

5. The last scenario involves a failure in the instrument tubing such that the level appears to remain at the proper level. There is no level drop or alarm even though the level is falling.

Each of these scenarios rely upon evaporation, which should act equally up on all three seals. Level readings should drop at roughly equal rates in all three filter seals; any other result should be suspect. Once the seal opens, the stack monitor will indicate a release of radioactive material.

3.2 INADVERTENT JETTING OF THE OUTLET SEAL

The next accident scenario considers inadvertent jetting of the outlet seal. The scenario starts with the condition that the outlet seals require filling. The operators go to the appropriate valve pit on the filter, open the water fill valve, and begin to fill the seal. While the seal is filling, one operator reads the level indicator for that seal. The indicator is located in the vicinity of the water line. When the proper level is reached, the water is turned off. This time the operators overfill the seal and must get permission to unlock and operate the steam jet. If the level indicator fails, or if the operator fails to notice the level indication, the level could drop to the alarm point. If the alarm fails as well, or if the control room operator fails to notify the process operators that the level is too low, the outlet seal could open.

The jet is capable of drawing 75 gal/min out of the seal. If the outlet seal is filled with the minimum 12 in. of water, the total volume is about 450 gal based on a 24-ft-long, 2.5-ft-wide seal. At a flow rate of 75 gal/min, the seal would be opened in 6 minutes. After this point, the seal opens at the rate of 1 ft in 9 minutes or 1.3 in/min (based on a 5-ft-wide 24-ft-long trough). The trough will be completely empty in about 20 minutes.

4.0 QUANTITY RELEASED

The first step in determining the quantity released is to determine the radiation damage to the filters.

4.1 RADIATION DAMAGE TO FILTERS

The HEPA filter elements installed in A, B, and C filters have wood frames, fiberglass filter media, urethane sealant, no separators, and neoprene gaskets. The filter elements are mounted in a carbon steel framework. Some of the filters may have stainless screens on the front and back. The filters are held onto the framework with the use of small metal plates that act as hold-down plates.

Cheever (1972) showed the results of gamma radiation exposure of HEPA filters. At exposures up to 1.5×10^9 rads, the detailed operating procedure (DOP) penetration tests showed an increase in penetration from 0.0035 percent to 0.0058 percent, a negligible difference. Tests on neoprene gaskets showed that neoprene turned brittle and powdery at 10^8 rads, but showed little leakage at a pressure differential of -2 in. of water. Samples of plywood and particle board became crumbly and brittle at exposures of 3×10^9 rads with little effect seen at 5×10^7 rads.

In another study, Jones (1972) presented results of the effect of radiation on filtration system materials. Jones found results similar to those of Cheever (1972). At exposures of 5×10^7 rads, the tensile strength of filter media decreased by a factor of 2, but the DOP penetration and flow resistance to about 1/10 the rated flow velocity remained the same. Neoprene, irradiated to 9×10^8 rads, also showed extreme brittleness. Jones (1972) also showed that the strength of the filter media, in terms of the height of a water column required to rupture the filter media, decreased a factor of 2 to 8 depending on the filter at 3×10^8 rads.

Hutten (1974) presented results of the effects of various polymeric binders on the radiation resistance of glass fiber HEPA filter media. Hutten studied eight binders that are used in HEPA filter media. He found that the tensile strength and DOP penetration changed little up to 7×10^8 rads, but that the water-burst height decreased significantly at that exposure.

The conclusion of this review is that at 10^8 to 10^9 rads (Sewell 1985) the filter media has tensile strength but little shear strength and could be brittle. Continued air flow may cause plugging (due to failures in the prefilter or local filter media failures) and/or breakthrough. Seismic vibration may result in collapse of the filter media and the wood frame and may result in the filter media, and possibly the frame, falling to the floor.

4.2 RELEASE FRACTIONS--FILTER MEDIA INTACT

If the HEPA filter media remains intact, the releases out the stack should be no larger than those experienced when the flow rate through C filter was doubled (see Appendix B, Mehta letter). Under those conditions, the

release rate of ^{90}Sr was about 0.05 Ci/h. This corresponds to a release rate of 5×10^{-10} sec^{-1} using a ^{90}Sr loading of 29,328 Ci (see Appendix B, Gehrke letter). This is a typical release rate for aerosols on sand or prairie soil (Sutter 1982).

4.3 QUANTITY RELEASED DUE TO A HOLE IN THE FILTER

If a HEPA filter contains a hole through it, the flow velocity could be much larger. The release from the affected area would be larger as a result of the larger flow rate, however the affected area is small compared to the entire area. To illustrate this effect, assume there is a hole in one of the filters in A, B, or C filter cells small enough that the total pressure drop across the filter is unchanged. As air flow enters these cells due to evaporation of the seals or inadvertent jetting, there is air flow through the hole. If the pressure drop is 1-in. water gage, the velocity is 27 mi/h using the assumptions of Appendix E. The velocity over the rest of the filters is about 0.5 mi/h, assuming half of the total flow of 35,000 ft^3/min goes through the filter cell (dimensions 18 ft by 24 ft) and the other half goes through D filter.

The release fraction resulting from air flow through a hole in the embrittled filter media is obtained by determining the velocity through the filter media and calculating the amount of material drawn off. The situation is similar to that in Sutter (1982), page 2.38. Sutter describes an experiment in which fluidized soil was pumped into a moving air stream in a tunnel 2 ft tall and 2 ft wide (the approximate size of a HEPA filter). The fraction of the soil made airborne was found by

$$Y = 0.00599\ X + 0.00543$$

where Y is the fraction made airborne
X is the wind speed in mi/h.

The release fraction due to a velocity of 27 mi/h is 16.7 percent (Sutter 1982). For comparison, Sutter (1981) shows release fractions of powders from smooth soil and steel of 0.5 to 10 percent at similar air flow velocities. The affected area is no more than 1/80 of the total area (80 filters per filter cell), because the framework between the filters limits the affected area to, at most, the area of one filter. Therefore maximum release is 0.2 percent (0.167 times 1/80) of the activity on the filters of that cell.

4.4 RELEASE FRACTION--FILTER MEDIA COLLAPSES

If the HEPA filter media collapses and falls to the floor, there will be an immediate suspension of material into the air and then a gradual release due to resuspension of material on the floor.

The immediate release is found by assuming that the radioactive material is the only material that is suspended after the filter media's impact with the floor. It is recognized that dust and portions of filter media will also

be suspended; however, it is very difficult to determine how much there would be. It would not be inconceivable to postulate a larger dust load by a factor of 10.

Three sources are used to provide estimates of the fraction of material immediately released. Mishima (1979) used an estimate of 1 percent immediately released with a resuspension rate of 10^{-8}/s to 10^{-10}/s, depending on wind velocity. The value of 10^{-10}/s is used for winds 1-5 mi/h or 88-440 ft/min. The situation studied in Mishima (1979) is a perforation of a filter due to a missile. Similar values were found at Rocky Flats where HEPA filters were dropped onto the floor.

The release fraction from the third source can be obtained by assuming that the fall of the filters onto the floor is similar to the resuspension of aerosols due to spills. Sutter (1981) studied the resuspension of powders due to spills and considered 1- and 3-m spill heights. The filters, however, ranged from 0 to 5 m above the floor. The resuspension fraction was 1.2×10^{-3} for TiO_2 powders spilled from 3 m, and 0.3×10^{-3} for TiO_2 powders dropped from 1 m. There was a factor of 2 difference for the resuspension of TiO_2 powder (theoretical density 4.5 g/cm^3) and depleted uranium oxide powder (theoretical density 10.8 g/cm^3). The density of cesium nitrate is 3.6 g/cm^3, so use of TiO_2 data is acceptable. Because filters will fall from 0 to 5 m to the floor, use of 3-m data seems to be a reasonable average.

The release fraction for the immediate release is therefore 0.12 percent to 1 percent.

The value of 0.12 percent will be used for the case where only the filter media collapses and falls to the floor. In this case, the contaminated, radiation embrittled filter media resembles in weight and physical properties the 1 kg container of powder spilled on the floor in Sutter (1981).

The value of 1 percent will be used for the case where the filter housings (the wood housing, not the metal frame into which the HEPA filter is inserted) also fall out. The value of 1 percent is chosen for a variety of reasons. First, Mishima (1979) suggests using a 1 percent release for the case where the entire HEPA filter falls to the floor, and a 10 percent release fraction if debris falls on top of it. Therefore, use of 1 percent matches Mishima's assumptions. Second, photos in Sutter (1981) show that the spilled material spreads laterally to a large extent. If the HEPA filter falls to the floor with the frame and filter media intact, the extent of lateral spread is minimized. Thirdly, the energy imparted to the powder in Sutter (1981) is much less than that imported to the powder should the filter media fall intact. The added energy is the weight of the frame and filter media.

Sutter (1981) also reports (on page 2.19) on experiments performed to determine release fraction of powders deposited on metal surfaces and on sandy soil. The release rate for the entrainment of powder off steel surfaces is about 10^{-6}/s at 1 mi/h (extrapolated value). The fraction released is given by

$$f = 1\ e^{-at}$$

where

$a = 10^{-6}$
t = time (seconds)

In 24 hours, "f" is found to equal 0.08. This case is overly conservative as the particles are not loose on the frames but contained in the filter media. A similar experiment where sandy soil is used instead of steel plate results in an average release rate of about a factor of 10 less and about a factor of 100 less if vegetation cover is used.

It is therefore concluded that the bounding release fraction is 1 percent for the case of air flow through embrittled filter media.

4.5 QUANTITY RELEASED

The quantity released for the "evaporation" and "inadvertent jet" accidents will range from 0.05 Ci/h or so to a value of 0.12 percent due to filter media collapse and fall to the floor, or a value of 0.2 percent maximum due to a hole in the filter. It is not believed that the air flow alone will push the wood frame to the floor; therefore, the release fraction is not 1 percent. In addition, the value of 0.2 percent is considered close enough to 0.12 percent, considering the conservatisms of the calculation, that the value of 0.12 percent will be used for both cases. If all three filter cells are involved (the evaporator case), and the maximum quantity found in Appendix B is used, the aerosol loading in the filter cells is found by:

$$Load = \frac{907\ g(0.0012)}{3(18)(18)(24)} = \frac{4.7 \times 10^{-5}\ g}{ft^3} = \frac{1.6\ mg}{m^3}$$
$$(without\ dust\ loading)$$

At a flow rate of 35,000 ft^3/min, the filter cells are cleared in 0.7 minutes. It is assumed that no fallout occurs between the filter outlet and the stack because of the small aerosol loading. Under more realistic conditions, there would be removal due to impaction when the flow changes direction and some removal due to agglomeration. The release out of the stack for the case of evaporation is therefore 154 Ci of ^{90}Sr and ^{90}Y, and 21 Ci of ^{137}Cs, using the maximum values in the October 1992 letter contained in Appendix B. The values are lower for the "inadvertent jet" case and could be lower if the dust loading of the filters is considered both in the quantity suspended and the air loading (air loading greater then 100 mg/m^3 or so can only exist for a few minutes). The release due to resuspension is at a rate of 10^{-10}/s, because the air velocity through the filter cells is 30 ft/min using 18- by 24-ft cells. This release will not contribute greatly to the dose. The dose consequence methodology used allows change to a more favorable meteorology at 8 hours. At 8 hours, only

$$(8\ h)(3{,}600\ s/h)(10^{-10}/s) = 3 \times 10^{-6}$$

of the material has been suspended and carried out.

5.0 EVENT PROBABILITY

The probability of a release because of evaporation is comprised of four terms. The first term is the probability that the surveillances are not performed at all. Failure to perform an administrative procedure for long periods of time is given a probability of 10^{-4}. The value 10^{-4} is arrived at by multiplying 10^{-2}, the probability that a person will not carry out plant policy when there is no check on that person (Swain 1980), by 10^{-2}, the assumed probability that the checker will not notice.

The second term is a failure of the alarm in all three sumps. The failure rate of a level switch is 10^{-6}/h (AIChE 1989). The failure of all three level switches will be assigned a value of 10^{-7}/h because of the high potential for common cause error. The probability of failure over 6 months time is 4×10^{-4}.

So the total probability of failure to read the indicators and failure of the alarms is 4×10^{-8}.

The third term is failure to respond to the alarm. The probability of failing to respond to an annunciator is 10^{-1} to 10^{-4} (Swain 1980, Table 20-3) depending on the number of annunciators alarming. The probability of noticing the annunciator but failing to notify the operator of the problem is 10^{-3} (Swain 1980, Table 20-22 and others). The probability of noticing the annunciator, notifying the appropriate operator, and that operator failing to carry out the task is also 10^{-3}. The total probability is the sum of these or 2×10^{-3}. A factor of 10 is applied to account for the fact that this condition must persist for 30 days. The probability of failing to chart the level indicators and failing to respond to the alarm is 2×10^{-8}.

The fourth term is the probability that the operators read the level gauge but fail to respond to the alarm. This is because the alarm and the level sensors are different sensors. There have been times when the alarm sounds, but the level is found to be acceptable. Under these conditions, the sump is not filled. The sump is not filled until the level indicators say it must be filled. The failure rate of the level indicators is 10^{-4}/h (AIChE 1989, page 155). The probability of failure over the course of 166 days is 1.6×10^{-2}. The failure rate is decreased by a factor of 10 to account for the fact that all three must fail, or 1.6×10^{-3}. The probability is reduced another factor of 10 because it is believed that the constant discrepancy between the alarm condition and satisfactory level will prompt someone to do something.

The total probability of the outlet seal opening due to evaporation is $P = 4 \times 10^{-8} + 2 \times 10^{-8} + 1.6 \times 10^{-4} = 1.6 \times 10^{-4}$.

The probability of inadvertently jetting the sump open is comprised of the following factors:

1) Probability of overfilling
2) Probability that the operator does not notice the level decrease
3) Probability that the operator does not see or respond to the alarms.

The probability of overfilling is 10^{-1} to 10^{-2} (Swain 1989). The probability that the operator does not notice the level decrease beyond normal is 10^{-2} to 10^{-3}. The probability the operator does not see or respond to the alarm is 2×10^{-3}. This is increased by a factor of 10 as there is only 30 minutes of time to notice the alarm and respond. The probability of inadvertently jetting the outlet seal open is

$$P = (10^{-1} \text{ to } 10^{-2})\ (10^{-2} \text{ to } 10^{-3})\ (2 \times 10^{-2}) = 2 \times 10^{-5} \text{ to } 2 \times 10^{-7}$$

A summary of information to this point is as follows.

Event	Probability	Curies Released	
		^{137}Cs	^{90}Sr
Evaporation	1.6×10^{-4}	Negligible to 21	Negligible to 154
Inadvertent jetting	2×10^{-5} to 2×10^{-7}	Negligible to 4	Negligible to 83

6.0 DOSE CONSEQUENCES AND RISK ACCEPTANCE

The dose consequences are found from A. V. Savino (see Appendix H). The doses from unit releases are as follows.

Dose (rem EDE)*					Contamination	
	Locations	^{90}Sr, ^{90}Y	^{137}Cs	Height	pCi/g	
					^{137}Cs	^{90}Sr
Onsite	100 m	5.8 E-1	8.3 E-2	ground	--	--
	290 m	3.8 E-3	5.6 E-4	stack	--	--
Offsite	20.3 km	6.2 E-4	8.7 E-5	ground	.29	.39
	20.3 km	4.0 E-4	5.8 E-5	stack	.26	.26
Onsite	665 m	2.2 E-2	3.0 E-3	ground	--	--
	665 m	2.1 E-3	3.0 E-4	stack	--	--

*Note: 1 Ci releases of each radionuclide, ingestion doses not considered.
EDE = effective dose equivalent.

The consequences of the evaporation scenario is as follows assuming a stack release of the largest release quantity. The allowables per the risk acceptance guidelines (WHC-CM-4-46, *Nonreactor Facility Safety Analysis Manual*) are also presented.

Dose (rem EDE)			Contamination		
			Allowable per WHC-CM-4-46	pCi/g	Fraction of Allowable*
Onsite	290 m	0.6 rem	20 rem	--	--
Onsite	665 m	0.3 rem	20 rem	--	--
Offsite	20.3 km	0.06 rem	3 rem	45	0.25

*Note: Found using the sum of the fractions and the following limits: 60 pCi/g for ^{137}Cs and 260 pCi/g for ^{90}Sr.

The dose for the inadvertent jetting scenario is a factor of 2 less.

The consequences for the evaporation and inadvertent jetting accidents are within the risk acceptance guidelines (WHC-CM-4-46).

6.1 POTENTIAL ADDITIONAL RELEASE AS A RESULT OF FLOODING OF A FILTER CELL

Water was inadvertently added to the A filter cell in December of 1992. The water level reached a depth of 34 in. above the floor and wetted one complete row of filters as well as the lower 3 in. of the second row. The liquid was subsequently jetted out of the filter cell. The question becomes, "Is there an impact to the analysis presented in the body of this report?"

The water on the submerged filters could weaken the already weak plywood housing and filter media (Section 4.1, "Radiation Damage to Filters") or in the worst case, cause the housing and filter media to fail. The water would also have removed the radionuclides from the wetted filter media, as cesium nitrate ($CsNO_3$) and strontium nitrate ($SrNO_3$) are very soluble. The effect on partially submerged filters could be similar.

It is assumed that the water damaged the filter media to the point where it posed no impediment to flow. If air flow started in this filter (due to the evaporation or inadvertent jetting accident), the air would preferentially flow through the wetted portion of the filters. It is also assumed that the water damage coupled with the radiation damage resulted in the loosening of the particles trapped on the filter media and a loosening of the weave just above the wetted portion. From this the affected height is judged to be 3 in. and that all of the radioactive material within this distance was removed (six times that removed by the high velocity through a small hole). The net effect is removal of

$$\left(\frac{1\ row}{8\ rows}\right)\left(\frac{3\ inches}{24\ inches}\right) = 0.0156\ of\ the\ total\ on\ A\ filter$$

Gehrke (Appendix C) shows that the maximum loading on A filter is 29,786 Ci of ^{90}Sr and 2,745 Ci of ^{137}Cs; 0.0156 of this is 464 Ci of ^{90}Sr and 43 Ci of ^{137}Cs. The release would be out of the stack. Section 6 shows that the onsite dose would be 1.8 rem. The offsite dose would be 0.2 rem. The ground contamination would be 132 pCi/g or 0.65 of the allowable. All of these values are within the risk acceptance guidelines (WHC-CM-4-46).

7.0 REFERENCES

AIChE, 1989, *Process Equipment Reliability Data*, Center for Chemical Process Safety, American Institute of Chemical Engineers, New York, New York.

Cheever, C. L., 1972, *Effects of High Level Gamma Radiation Exposure of HEPA Filters*, CONF-720823, Twelfth Atomic Energy Commission Air Cleaning Conference, August 1972, Oak Ridge, Tennessee.

Hutton, I. M., 1974, *The Effect of Various Polymeric Binders on the Radiation Resistance of Glass Fiber HEPA Filter Media*, CONF-740807, Proceedings of the Thirteenth Atomic Energy Commission Air Cleaning Conference, August 1974, San Francisco, California.

Jones, L. R., 1972, *Effects of Radiation on Reactor Confinement System Materials*, CONF-720823, Twelfth Atomic Energy Commission Air Cleaning Conference, August 1972, Oak Ridge, Tennessee.

Mishima, J., 1979, *Estimated Airborne Release of Plutonium from the Westinghouse Cheswick Site as a Result of Postulated Damage from Severe Wind and Seismic Hazard*, PNL-2965, Pacific Northwest Laboratories, Richland, Washington.

Sewell, R. G., 1985, *B-Plant Safety Analysis Report*, SD-WM-SAR-013, Rev. 1, Rockwell Hanford Company, Richland, Washington.

Sutter, S. L. 1982, *Accident Generated Particulate Materials and their Characteristics - A Review of Background Information*, NUREG/CR-2651, United States Nuclear Regulatory Commission, Washington, D.C.

Sutter, S. L., 1981, *Aerosols Generated by Free Fall Spills of Powders and Solutions in Static Air*, NUREG/CR-2139, U.S. Nuclear Regulatory Commission, Washington, D.C.

Swain, A. D., 1980, *Handbook of Human Reliability with Emphasis on Nuclear Power Plant Applications*, NUREG/CR-1278, Sandia National Laboratories, Albuquerque, New Mexico.

WHC-CM-4-46, *Nonreactor Facility Safety Analysis Manual*, Westinghouse Hanford Company, Richland, Washington.

This page intentionally left blank.

APPENDIX A

REVISED 291B FILTER INVENTORIES

This page intentionally left blank.

From: B Plant Process Engineering 16143-92-284-JWG
Phone: 2-0203 S6-70
Date: October 14, 1992
Subject: PRELIMINARY ESTIMATE OF REVISED 291B FILTER INVENTORIES/BASED ON UNREVIEWED SAFETY QUESTION INVESTIGATION

To: W. W. Bowen

cc:	P. A. Baynes PAB	S6-70	J. A. O'Brien	S6-81
	D. M. Bogen	S6-65	E. D. Robbins	S6-65
	L. I. Covey	S6-70	P. E. Roege	S6-81
	W. E. Davis	S6-70	D. F. Salsman	S6-65
	B. J. Howard	S4-57	JWG File/LB	

References:

(1) Letter, Atlantic Richfield Hanford, D. E. Eakin to J. B. Fecht, "Radionuclide Content of 291-B Filters", dated May 21, 1974.

(2) Letter, Battelle, L. G. Faust/N. M. Robinson to G. E. Backman, "Radionuclide Inventory B Plant Exhaust Filters", dated March 12, 1974.

(3) ARH-2936, Atlantic Richfield Hanford, J. P. Sloughter, "Estimates of Radionuclide Inventories in 291-B Exhaust Filter Cells", dated November 29, 1973.

(4) Letter, Rockwell Hanford Operations, T. P. Lynch to R. G. Sewell, "B Plant Exhaust Filter Estimate", dated September 7, 1984.

(5) Telecon, J. W. Gehrke to J. P. Sloughter, Subject: References 1, 2, 3; date September 30, 1992.

During the investigation of the unreviewed safety question (USQ) concerning potential radiation damage to A, B, and C filters, a review of strontium (Sr) and cesium (Cs) inventory estimates was completed.

The purpose of this letter is to communicate the bases for this important source term and new estimates which are lower. A high priority for followup USQ work, as well as the project W-059 engineering study, will be obtaining new dose rate data that reflect the current condition of the filters.

In the interim, it is recommended that B Plant discontinue using the higher (6 to 8 megacuries) estimate of the source term.

Summary

A, B, and C filters are now estimated to contain a total of 17,000 to 150,000 curies of ^{90}Sr and ^{137}Cs. The large uncertainty (range) is a result of the many assumptions and limitations of the filter system. The calculations, which supported the USQ concerning total accumulated radiation dose to filter materials have not changed. The dose rate data was real.

D filter may contain a significantly higher inventory than A, B, and C after 13 years of service, 350,000 to 600,000 curies of ^{90}Sr and ^{137}Cs, based on reference 4. The calculation method used for D filter was less rigorous than the model used for A, B, and C and even greater uncertainty may exist with the D filter estimate.

Recommendations are provided at the end of this letter which include obtaining new dose rate readings and inventory calculations.

Background

At least 4 engineering studies, starting in 1973 (Sloughter, reference 3), have been performed to estimate the buildup of radionuclides.

The 1973 study showed an alarmingly high buildup of inventory, approximately 3 megacuries, half of it on C filter with only 2 years of service on the filter at the time.

Followup studies were performed in 1974, due to the concern about issues similar to the recent USQ, and the complex, difficult-to-model geometry of the filter banks. Followup work involved more samples, analytical work at 222-S laboratories, some new rad readings, and consultation with Battelle's experts on dose rate calculations. The 1974 study (references 1, 2, and 5) resulted in a revised curie inventory, to much lower values (maximum total 78,000 curies).

The ISO-Shield calculations were performed with 1973 dose rate data. The new calculations properly accounted for daughter isotopes ^{90}Y and ^{137}Ba, and yielded much lower curie levels for ^{90}Sr and ^{137}Cs. The exercise demonstrated the complexity and pitfalls of calculating the inventory of our two isotopes.
Here are some of the problems:

- The ^{90}Sr and ^{137}Cs ratio in the particulate loaded on the filters is not known and can only be verified by very indirect means such as smear samples in the risers, liquid sump samples, or stack air samples.

- Both gamma and beta emitters are present; ^{137}Ba being the principal gamma emitter.
- The major component of radiation (most of ^{90}Y, ^{90}Sr and ^{137}Cs) is beta which is difficult to measure by dose rates.
- The methods and assumptions used to calculate inventory vary widely and can yield radically different results.

Unfortunately the followup 1974 work was not as well published, nor did it have the historical impact of reference 3, even though it should have superseded the earlier work for our "official" estimates. The more recent estimates of A, B, C filters in reference 4 and our basis for the Cleanout and Stabilization (CSP) plan were the megacurie quantities documented in the 1973 study. Per reference 5, the lower inventory values were provided to the Hanford Environmental Impact Statement report. The lower values were also published in Chapter 5 of the B Plant Safety Analysis Report (SAR), but were not referenced to the 1974 studies where the data originated.

A, B, C Filters

The attached table summarizes the maximum and minimum curie estimates from references 1 and 2 with associated assumptions. The filter loading is projected to the retirement of each filter and then decayed to 1992.

The radiation absorbed dose (rad) calculations, which supported the USQ concerning total accumulated dose, have not been changed by the uncertainty of ^{90}Sr and ^{137}Cs inventory estimates.

D Filter

D filter may contain a significantly higher inventory after 13 years of service (350,000 to 600,000 curies ^{90}Sr and ^{137}Cs) based on reference 4 and the following rationale:

Recommendations:

- New dose rate data on A, B, C, and D filters must be obtained to support W-059 engineering study as well as work on hazard class, CSP planning, and resolution of the USQ.

- Consultants should be used (possibly PNL) to assist in performing practical, but state-of-the-art, inventory estimates from properly obtained rad levels. ALARA and cost have to be considered.

- Rad damage will be reassessed based on rad reading and photography/video. Jerry Everett will be needed to support both visual and rad inspection work in A, B, C, and D filters.

- Future reports of Sr and Cs inventory should emphasize the range or uncertainty associated with the limited data and the numerous assumptions.

- B Plant Engineering engineers need to become more knowledgeable, either by self study, formal training or whatever, on radiation dosimetry theory.

This problem of characterization of rad inventory is typical and will be routine during the CSP.

J W Gehrke

J. W. Gehrke
Principal Engineer

pan

Attachments (2)

W. W. Bowen
Page 5
October 12, 1992

16143-92-284-JWG
Attachment 1

ESTIMATE OF CESIUM & STRONTIUM INVENTORY ON 291B FILTERS
Curies

		MINIMUM [1]		MAXIMUM [1]	
1974 DATA [2]		STRONTIUM-90	CESIUM-137	STRONTIUM-90	CESIUM-137
A FILTER		630	2730	39500	3640
B FILTER		400	1750	46600	2330
C FILTER		0	3940	9900	3950
SERVICE YRS [3]					
A FILTER	7				
B FILTER	5				
C FILTER	1.75				
END OF SERVICE [4]					
	YRS	STRONTIUM-90	CESIUM-137	STRONTIUM-90	CESIUM-137
A FILTER	8	720	3120	45143	4160
B FILTER	10	800	3500	93200	4660
C FILTER	7	0	15760	39600	15800
1992 PROJECTED (DECAY CORRECT) [5]					
	YRS				
A FILTER	18	475	2059	29786	2745
B FILTER	13	592	2592	69024	3451
C FILTER	13	0	11672	29328	11701
		MINIMUM		MAXIMUM	
		STRONTIUM-90	CESIUM-137	STRONTIUM-90	CESIUM-137
A,B,C TOTALS		1068	16322	128137	17897
		TOTAL MIN	17,000	CURIES ^{90}Sr and ^{137}Cs	
		TOTAL MAX	150,000	CURIES	

Bases:

1) Minimum and maximum values selected from references (1) and (2).

2) Some of the rad dose data was obtained in 1973 (from reference (3) as discussed in reference (2).

3) Time each filter in service from startup to 1974 data point.

4) Total service life of filters when retired. Curie values projected (extrapolated) based on linear loading.

5) Values decay corrected using 30 year half life, no decay during loading/service, and yrs are from filter retirement date until 1992.

The 17,000 to 150,000 curie total for A, B, C emphasizes the uncertainty involved with many assumptions and limitations of the system.

Reference (4) (Lynch) calculated D filter inventory from rad readings taken downstream of the three HEPA filter stages with an ionization chamber. The minimum and maximum values for 1984 were:

MINIMUM		MAXIMUM	
STRONTIUM-90	CESIUM-137	STRONTIUM-90	CESIUM-137
14,900	164,000	22,000	242,000

The D filter had been in service 5 years when the dose rates and inventory estimate were completed. Today the filter has been in service a total of 13 years, startup was 1979. Extrapolating the inventory to the present, based on linear loading and ignoring plant activities, the non decayed inventory, is:

MINIMUM		MAXIMUM	
STRONTIUM-90	CESIUM-137	STRONTIUM-90	CESIUM-137
38,700	426,000	57,000	629,000

Decay calculations were done assuming linear loading (based on the 1984 estimate) from 1979 to 1992. The inventory at the end of each year was decayed to 1992 the results are listed below:

MINIMUM		MAXIMUM	
STRONTIUM-90	CESIUM-137	STRONTIUM-90	CESIUM-137
34,000	320,000	50,000	550,000

APPENDIX B

B PLANT FILTER PROBLEMS

This page intentionally left blank.

Internal Letter

Rockwell International

Date February 28, 1979

No. 60423-79-025

TO: (Name, Organization, Internal Address)
R. J. Thompson
Plant Engineering Dept.
202-A/200-E Area

FROM: (Name, Organization, Internal Address, Phone)
B. C. Mehta
B Plant Process Engineering
271-B/200-E Area
2-2384

Subject: B Plant Filter Problems

References:

1) Letter, February 15, 1979, J. W. Gehrke to A. J. Low, "B Plant Operating Plant with Canyon Ventilation on Sand Filter".

2) Document No. ARH-2927, November 13, 1973, "Evaluation of the B Plant Sand Filter". by D. E. Eakin.

3) Document No. ARH-2936, November 29, 1973, "Estimates of Radionuclide Inventories in 291-B Exhaust Filter Cells" by J. P. Sloughter.

Since January 1979, several significant events have occurred with respect to the B Plant exhaust filter system. The two High Efficiency Particulate Air (HEPA) filter systems have been taken off-line, the emergency sand filter system activated, and work initiated to put the fourth HEPA filter system into service. This letter documents these events and provides a status report.

The B Plant 200 foot stack monitor has shown an upward trend in Total Beta activity since the beginning of January 1979. The B filter was suspected as the cause of the increased stack activity and was taken out of service. Stack activity then returned to normal. The C filter differential pressure (dp) increased from 2.0 to 2.4 inches with the increased flow through the C filter cell.

On February 9, 1979, the steam driven emergency fan came on and the two electric exhaust fans failed to cut out because of failure in the automatic controller. No apparent reason could be found for the controller failure. The system air flow rates increased to an estimated 95,000 cfm, which is in excess of design capacity of 75,000 cfm, (nominal flow is 45,000 cfm).

A series of events culminating in the high air flow rate apparently resulted in further disintegration of the C pre-filter. Photographs taken in 1975 indicated that pre-filter failure probably took place shortly after the 1972 startup. High radiation levels also have contributed to the problem. With the total estimated dose approaching 1×10^8 Rads, the pre-filter bags opened up and debris apparently accumulated on the face of the C filter HEPA #1 bank.

On February 14, 1979, there was a sudden drop in the dp from 3.5 to 4.0 ? inches of water, which indicated a failure of HEPA #1. The system was

switched to the emergency stand-by sand filter. All processing in B Plant was suspended and will remain shut-down while the sand filter on line for two reasons:

1) The sand filter is less efficient than the HEPA filters which can result in increased stack off-gas radionuclide concentrations. B Plant operations are suspended to minimize radionuclide concentration in the stack off-gas.

2) The air flow capacity through the sand filter is limited to 25,000 cfm vs. the normal 45,000 cfm. The lower air flow presents a potential for reversal of air flow in the process cells if a significant amount of heat is generated in a cell.

General Description of Ventilation System

The 221-B Canyon Ventilation System was designed to perform two major functions:

1) The system must maintain a negative pressure in the grossly contaminated cells with respect to the canyon above the blocks, while maintaining the entire canyon area at a negative pressure with respect to the atmosphere and the nonregulated areas of the plant. The same functions must also be performed for the 212-B Building. The air flows from zones of little or no contamination into zones of higher concentration. Prior to being discharged to the atmosphere from the 200 foot stack, the air is filtered to reduce the concentration of radioactive particles to below established limits.

2) A consistent atmosphere within the processing cells is maintained in regard to temperature and humidity. This controlled atmosphere lengthens the life of electrical insulation and similar materials.

The normal air-flow pattern for air handled in the 221-B ventilation system is as follows: Air is drawn in from outside by the carrier supply units along the craneway, the air flows over the parapet wall and down to the canyon deck. The stream infiltrates the various cells via the openings around the cell blocks. Air is exhausted from the cells to the wind tunnel through twelve 14-inch holes in most cells (Cells 1, 2, 4, 10 and 40 have one hole). The air passing from the wind tunnel is filtered through parallel filter systems and exhausted to the stack by two electrical fans or a steam turbine driven fan. (See ventilation diagram, Figure 1).

The A, B, and C filter systems contain a series of one prefilter and two banks of high efficiency particulate air (HEPA) filters. A fourth system is being constructed. Each HEPA is rated at 99,993 percent removal efficiency under defined conditions. The 225-B Building (Encapsulation) has a separate ventilation system.

Filter History

B Plant started up with the A filter on line in December 1966. Due to high dp operational of limits could not be maintained. The cause of high dp was filter plugging due to construction dust from concrete borings in the tunnel. Since the filter unit is not replacable it was necessary to add the B filter which was brought on line in November 1968. Due to the accumulation of normal dust, which caused high dp's in the A & B system, it was necessary to add the C filter, which was placed in operation in February 1972.

After the C system was placed in service, February 14, 1972, in parallel with A and B systems, the differential pressures across the filters were about as follows: (inches of H_2O).

	A	B	C
Prefilter	0.05	0.1	0.08
HEPA #1	0.9	0.1	0.22
HEPA #2	0.1	0.09	0.22

The older A & B systems were taken off the line in December 1974 following several months of higher than normal stack air samples which were generally attributed to the A filter system. The A & B filters were both taken off line at that time because the design prohibited removing either one separately. This was remedied and the B system was reactivated on May 1, 1975.

On April 29, 1975, the C filter was tested with DOP (Dioctyl Phthalate Aerosol) and had a measured efficiency of 99.98 percent. On May 1, 1975 after the B filter was placed on line in parallel with C filter and the combination was tested with DOP. The two filters together also tested at 99.98 percent efficiency. On January 6, 1979 the B filter was taken out of service after a period of increased stack activity, and C filter differential pressure increased from 2 to 2.4 inches with air flow maintained at the normal 45,000 cfm.

Failure of the C Filter 1at HEPA Bank

The system was operating with two supply fans, the pressure was stable in the canyon, and the controller set for a 40 percent opening of the throttling dampers on the electric exhaust fans. The two electric centrifugal fans are each rated at 37,500 standard cubic feet per minute. A steam turbine driven fan, which also has the capacity of 37,500 standard cubic feet per minute, serves as an emergency standby.

On February 9, 1979, the steam turbine fan started because the throttling damper failed to regulate air flow through C filter. The air flow through the C Cell filter system increased to an estimated 95,000 cfm. The design air flow rate through C Cell is 75,000 cfm. Normal air flow rates of 45,000 cfm were established within a few hours. The pressure drop across

the first bank of HEPA filters increased from 2.1 to 4.0 inches. On February 14, 1979, there was a sudden drop in the differential pressure to 0.7 inches of water indicating a failure of the first HEPA filter bank. Air samples were taken between HEPA #1 and #2 filters (Figure 2). The sample results converted to the standard 24 hour base period were 1 to 2 curies TB or 10 times greater than would be expected based on HEPA filter efficiency ratings. With the differential pressure data this was conclusive evidence that HEPA #1 had failed. The stand-by sand filter was activated and the C filter cell taken off-line.

The following tables summarize differential pressure data and air sample analyses:

Differential Pressures - Inches of Water

Pre-filter	HEPA #1	HEPA #2	Date
1.0	1 - 1.3	0.4 - .5	January 6, 1979
1.0	1.9 - 2.4	0.5 - 0.6	February 8, 1979
0.2	3.5 - 4.0	---	February 9 - 13, 1979
0.2	0.7	0.3 - 0.5	February 14, 1979

Air Sample Analyses

Sample Code No.	Sample Number	Total Beta (Curies/hr.)	Total Beta Curies Converted to 24 hr Base	Date
684	1	3.48^{-2}	0.84	2-14-79
	2	5.92^{-2}	1.42	2-14-79

Failure of the first HEPA filter bank is attributed to the high air flow rate and radiation damage to the filters. Photographs taken in 1975 indicated that pre-filter failure probably took place shortly after the 1972 startup. With the total estimated doses approaching 1×10^8 Rads, the pre-filter bags opened up due to radiation damage of the cotton thread used to sew the backs together. The high air flow rates apparently tranported additional debris from the pre-filter assembly to the face of the first bank of HEPA filters as indicated by the increased pressure drop across the filter. Dose rates in the range of 10^3 to 10^4 rads per hour, or 10^7 to 10^8 rads per year within the filters have been estimated (reference 3). Available literature indicates that the organic materials of construction for HEPA filters, such as the plywood frames, rubber base adhesives, and rubber gaskets begin to lose

mechanical strength after total absorbed radiation of 5×10^8 to 10^9 rads. The increased pressure drop across the HEPA filters evidently was sufficient to cause structural failure of the filters which had been weakened by the high radiation fields. Pressure drop calculations indicate that about 16 square feet of surface was opened.

Activation of the Sand Filter

On February 14, 1979, the standby sand filter was activated. As a precautionary measure, all processing in the building was shutdown while the sand-filter is on-line, see Reference 1. Under plant shutdown conditions the sand filter can maintain the activity release significantly below the limits defined in RHO-MA-111. The air flow capacity of the electric exhaust fans and the sand filter is adequate to maintain the air flow patterns inside the plant to prevent an undesirable spread of radioactive contamination.

By exhausting all the canyon ventilation air through the sand filter during an extended emergency shutdown it is projected that the total beta release to atmosphere via the stack should remain at 1×10^{-3} curies per day. This is, respectively, a factor of 10 and 200 below the class II action level release limits for 90-Sr and total beta defined in RHO-MA-111. The weekly discharge limits as defined in RHO-MA-111 are 0.1 curies of 90-Sr and 2 curies of all other fission products.

The maximum air flow achievable through the sand filter is about 25,000 cfm. The canyon vacuum under these conditions is 0.07 inches, which is greater than the 0.04 minimum desired for control of contamination.

Figure 3 and Figure 4 are B Plant 200-foot stack graphs for the months of January and February 1979. The daily average total beta activity is shown in the table below:

Month	Daily Average Total Beta Curies per day
January 1979	8.2×10^{-4}
Feb. 1 - Feb. 14, 1979	1.16×10^{-4}
(Sand Filter on-line) Feb. 14 - Feb. 19, 1979	1.26×10^{-3}

Work is in progress to complete installation and startup of the 4th filter (D filter) by March 21, 1979.* Because of the restricted air flow through the sand filter (25,000 cfm maximum) heat buildup in the cells and reversal of air flow in the process cells is the major concern. Processing activities planned for the shutdown period include the following:

* activated 3/21/79.

Complete elution of T-18-2 routing dilute ammonium and cesium carbonate to TK-19-1, TK-20-1, and TK-17-2. E-20-2 should not be operated.

E-23-3 should not be operated. Tank Farm process engineering has been contacted concerning the increased waste volume.

The Cask Sation can be operated if the cell differential pressure is adequate. The neutralization rate in TK-25-1 should be slowed to 3-5 hours to prevent pressurization.

No ammonia containing waste should be transferred to Tank Farms directly. The condensate streams, normally routed to TK-24-1, and low level encapsulation waste can be handled.

Feed and waste transfers in Cell 39 can continue. WESF ventilation system is independent of B Plant with only a minor intertie via the feed tanks. WESF processing plans can continue.

Jet transfers and all processing activities should be minimized. In those cells requiring movement of materials consideration should be given to increasing the air flow by partially sealing off unused cells.

Crane work, specifically the TK-39-3 thermom jumper change, should be postponed. Maximum cooling water will be maintained on TK-39-3; no simmering is planned.

B C Mehta

B. C. Mehta
Engineer

BCM/lm

cc: L. I. Brecke
W. R. Christensen
L. E. Edvalson
J. W. Gehrke JWG
R. A. Hultgren
A. J. Low
J. H. Mathis
F. A. Perkins
R. E. Preston
W. E. Poling
L. Roberson
R. E. Sharpe
P. F. Shaw
H. P. Simonds
J. P. Sloughter
R. E. Van der Cook

ELEVATION VIEW 291-B FILTER CELL

LOCATION AIR SAMPLER

CODE 684 C Cell
652 A Cell
653 B Cell

A, B, + C Cell sampler location identical

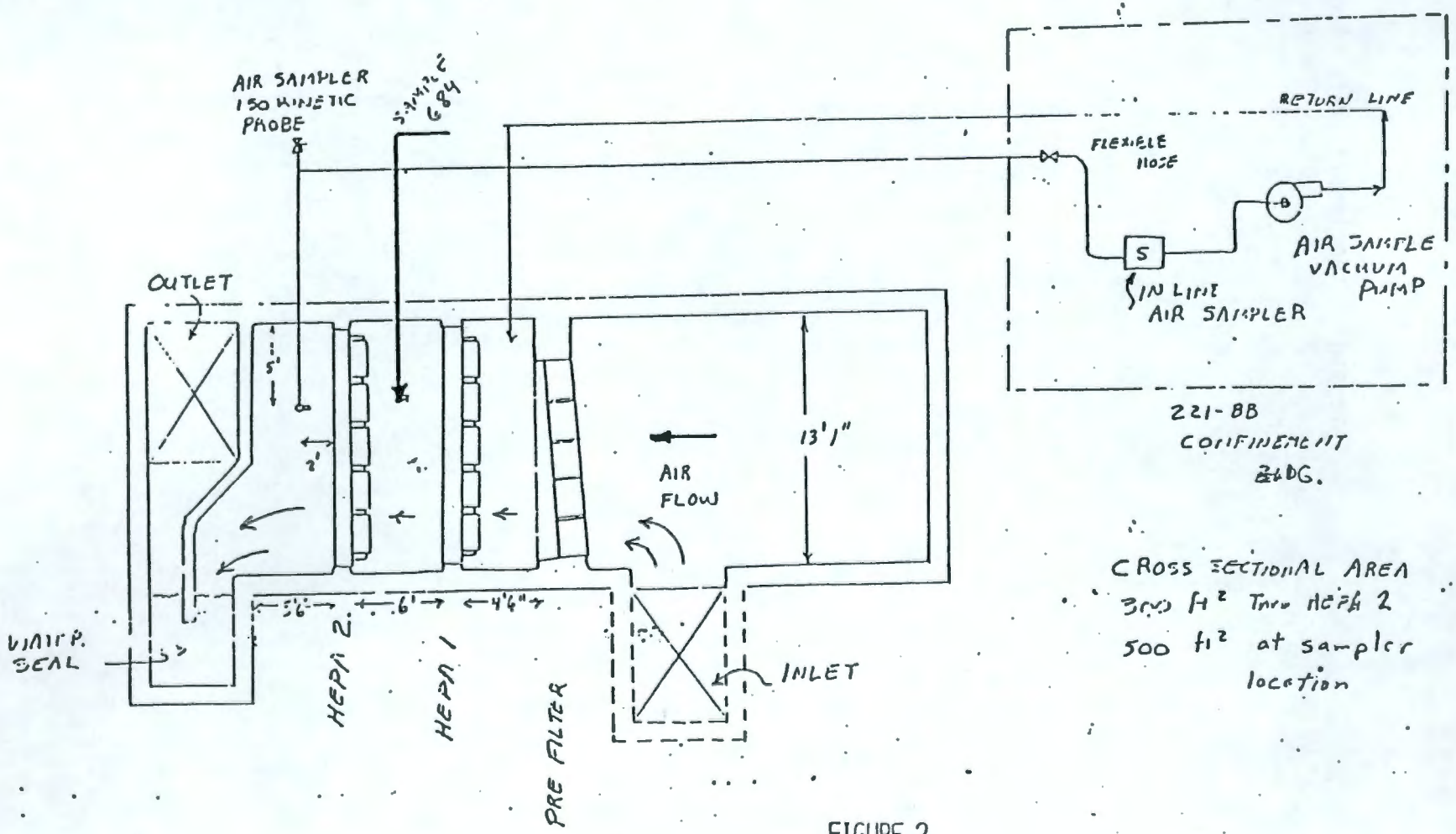

FIGURE 2

This page intentionally left blank.

APPENDIX C

REVISED INVENTORY ESTIMATES FOR B PLANT UNREVIEWED SAFETY QUESTION

This page intentionally left blank

From: B Plant Process Engineering 16430-93-009-JWG
Phone: 2-0203 S6-70
Date: January 18, 1993
Subject: REVISED INVENTORY ESTIMATES FOR B PLANT UNREVIEWED SAFETY QUESTION SAFETY ANALYSIS BASED ON A FILTER FLOODING INCIDENT

To: R. M. Marusich H5-32

cc:	J. C. Bickford	S6-60	J. A. O'Brien	S6-81
	D. M. Bogen	S6-65	P. E. Roege	S6-81
	W. W. Bowen	S6-65	D. K. Smith	S6-70
	L. I. Covey	S6-70	G. S. Voyles	S6-60
	W. E. Davis	S6-70	B. L. Wallace	S6-70
	S. E. Killoy	S6-70	JWG File/LB	

Reference: Letter, J. W. Gehrke to W. W. Bowen, "Preliminary Estimate of Revised 291B Filter Inventories Based on Unreviewed Safety Question Investigation" dated October 14, 1992.

The referenced letter estimates maximum cesium and strontium inventories based on somewhat outdated radiation dose rate data. Due to the A filter flooding incident, B Plant Engineering (BPE) must reassess the inventory and isotopic estimate for A, B and C filters. This letter provides the information required to complete the unreviewed safety question (USQ) safety analysis.

The A filter building was flooded to a depth of 34 inches above the floor. The first row of HEPA filters (first and second stage) were submerged completely. Approximately 1/8 of the second row was wetted. (See calculation, attachment 1)

Water was jetted out of the filter building totaling 7800 gallons. The water was sampled in Tk-9-1 and the results are enclosed as attachment 2. A surprising amount of cesium was dissolved and removed compared to previous data provided in reference 1. The water soak of the lower part of A filter removed 2500 curies ^{137}Cs and 180 curies ^{90}Sr (see calculations, attachment 3). Based on B Plant process experience and the higher than expected cesium quantity, the cesium compounds are judged to be 100% soluble. The remaining ^{137}Cs inventory on A filter is estimated to be 18,000 curies. Strontium compounds could be relatively insoluble, therefore, a conservative estimate of 10% Sr solubility is used. The remaining ^{90}Sr inventory on A filter is estimated to be 12,000 curies.

The A filter water samples indicate an isotopic split of approximately 60% Cs and 40% Sr. The 60%, or greater, cesium fraction is supported by systematic smear samples and solid waste from the B Plant canyon (typically 80% cesium, 20% strontium). The unplanned flooding of A filter resulted in the best real "sample" of filter material to date. It is recommended for safety analysis purposes that the new A filter values of 18,000 curies ^{137}Cs and 12,000 curies ^{90}Sr be used.

Hanford Operations and Engineering Contractor for the US Department of Energy

Based on reference 1, B filter is believed to contain a maximum of 72,000 total curies and C filter a maximum 41,000 total curies. The previous cesium and strontium inventory fractions for all three filters were based on a few sump samples in 1973 and smears of inspection risers and cannot be considered as reliable as the A filter sample. Based on the A filter sample results and rationale given above, it is recommended that the inventory for B and C filters should also be considered 60% cesium. The new and old values for all three filters are shown in the table below.

TABLE

PREVIOUS MAXIMUM ESTIMATES	A FILTER	B FILTER	C FILTER
Strontium - 90	30,000	69,000	29,000
Cesium - 137	2,700	3,500	12,000
Total	33,000	72,000	41,000
NEW MAXIMUM ESTIMATES			
Strontium - 90	12,000	29,000	16,000
Cesium - 137	18,000	43,000	25,000
Total	30,000	72,000	41,000

To summarize, the A filter flooding incident provided a good sample which strongly suggests more cesium is present than previously estimated and the cesium is easily removed with water. Because original estimates were based on radiation dose, future radiological analyses will probably indicate less strontium inventory than values given here. It is believed that the new strontium and cesium values are conservative and higher inventory estimates are unlikely.

Please call me at 2-0203 if additional information or clarification is needed.

JW Gehrke

J. W. Gehrke
Principal Engineer

pan

Attachments (3)

WHC-SD-WM-TI-554
REV 0
ANALYSIS

FOR: USQ SAFETY ANALYSIS
LOCATION: B PLANT
SUBJECT: A FILTER WATER LEVEL

PAGE: 1 of 1
DATE: 1-14-93
BY: J. W. Gehrke
CHECKED BY: [illegible]

ESTIMATE OF WETTED CROSS SECTION FOR A FILTER FLOODING

PER B.L. WALLACE:

INITIAL A FILTER LEVEL READING FROM INSTRUMENTATION (INTERMEDIATE SUMP) = 63 INCHES

CONVERTED TO ACTUAL INCHES WATER IN FILTER CELL
= 63 (8/10) = 50.4 INCHES

DEPTH OF SUMP = 1'4" = 16 INCHES

= 50.4 - 16 = 34.4 => 34 INCHES WATER ABOVE FLOOR

PER H-2-32472:

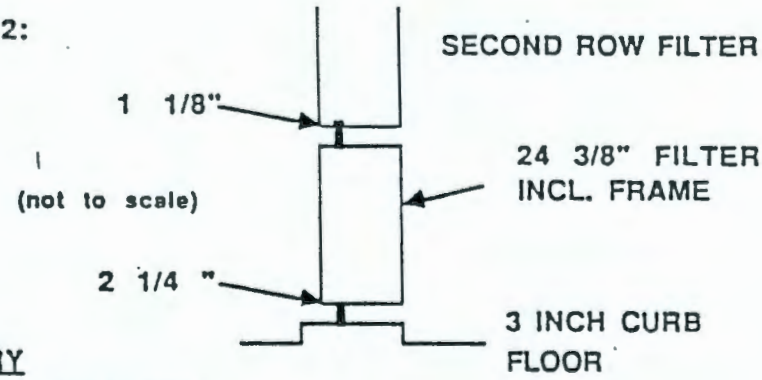

SUMMARY

34"	- liquid level
30 3/4	- bottom 2nd HEPA
29 5/8	- top 1st HEPA
5 1/4	- bottom 1st HEPA
3	- top of curb
0	- floor level
-16	- bottom sump

CONCLUSION:

SECOND ROW HEPA FILTERS WERE SUBMERGED BY -

$$\frac{3\ 1/4}{24\ \ 3/8} = 0.13 = 13\ \%$$

ABOUT 1/8 OF SECOND ROW HEPAS WAS WETTED BASED ON STATIC LIQUID LEVEL

J.W. GEHRKE 1/13/93

SAMPLE STATUS REPORT FOR B 7507. 9-1 TIME: 1/11/93 15:46
DISPATCHED: 1/ 6/93 13:30 SAMPLE HAS NOT BEEN SLURPED
RECEIVED: 1/ 6/93 22:23

EXT.	DETER.	RESULTS OR STATUS		OUT OF RANGE?	GOOD ANS?	CHARGE CODE
****	*******	**********		***	***	******
1001	APPR/OTR	75 MRAD/HR				D6X40
1001	APPR/OTR	<1 ML SOLIDS				D6X40
1001	APPR/OTR	AQUEOUS CLEAR YELLOW				D6X40
1205	TB	1.36000E 05 uCi/L		N	Y	D6X40
1621	TOC	1.80000E-01 G/L C		N	Y	D6X40
2101	GEA	3.27402E 05 uCi/GAL	Cs-137	N	Y	D6X40
2705	Na	7.18000E-03 M		N	Y	D6X40
2751	NH3	4.16000E-02 M		N	Y	D6X40
2912	NO2	1.19000E-03 M		N	Y	D6X40
2937	NO3	OUT FOR RERUN				D6X40
2937	NO3	4.14000E-02 M		N	Y	D6X40
3111	OH-	< 1.91000E-02 M		N	Y	D6X40
3414	Pu/AEA	< 1.08520E-01 uCi/L		N	Y	D6X40
3751	SET-%SOL	< 2.70000E 00 VOL%		N	Y	D6X40
3801	Sr89/90	OUT FOR RERUN				D6X40
3801	Sr89/90	2.25586E 04 uCi/GAL		N	Y	D6X40

END OF REPORT

WHC-SD-WM-TI-554
REV 0
ANALYSIS

FOR: USQ SAFETY ANALYSIS
LOCATION: B PLANT
SUBJECT: A FILTER INVENTORY

PAGE: 1 of 1
DATE: 1-14-93
BY: J. W. Gehrke
CHECKED BY: [illegible]

SUMMARY OF WATER SAMPLE

TK-9-1 SAMPLE # B 7507. 9-1

Cesium-137	3.27E+05 microCuries/gal	
	0.327 Curies/gal	2551 Curies
Strontium-90	2.26E+04 microCuries/gal	
	0.0226 Curies/gal	176 Curies
volume	7800 gallons	

ESTIMATE OF WETTED CROSS SECTION

Cross section	80 HEPA filters
bottom row	10
second row	10
	13% %second row wetted
Total	11.3 HEPAs wetted
	14% %total HEPAs wetted

SOLUBILITY ASSUMPTIONS

	minimum	maximum
Cesium-137	100%	100%
Strontium-90	10%	100%

INVENTORY REMAINING ON A FILTER

	MAXIMUM	minimum
Cesium-137	18057	18057 Curies
Strontium-90	12480	1248 Curies

RECOMMENDED INVENTORY FOR SAFETY ANALYSIS

	MAXIMUM	
Cesium-137	18000	Curies
Strontium-90	12000	Curies

This page intentionally left blank

APPENDIX D

EVAPORATION OF THE WATER SEAL

This page intentionally left blank.

APPENDIX D

EVAPORATION OF THE WATER SEAL

Actual Data

A review of the data shows that the evaporation rates of water seals vary from 2 to 4 in. per month depending on the season.

Natural Convection

Perry (1951) gives an equation for evaporation of water due to natural convection. The equation is:

$$W = 0.00138\ (Pw - Po)^{1.2}$$

where W = the evaporation rate, lb/h-ft^2.
Pw = the partial pressure at the temperature of concern. Assume 55 °F. Pw = 11 mm, mercury.
Po = the partial pressure far away. Assume 0 mm mercury.

Solving yields

$$W = 0.025\ \frac{lb}{h\text{-}ft^2}$$

The volumetric change is

$$0.025\ \frac{lb}{h\text{-}ft^2}\ \frac{ft^3}{62.4\ lb} = 0.0004\ \frac{ft^3}{h\text{-}ft^2\ area}$$

The seals are 5 ft wide and 24 ft long. The area is 120 ft^2, so the volumetric change is 0.05 ft^3/h. The change in depth is 0.0004 ft/h or 0.01 ft/d, or 0.12 in/d or 3.6 in/mo. If the water seal is 20 in., it will take 166 days or 5.5 months to evaporate it. This correlates well to the actual fill rate of every "few months" and the evaporation in the section above.

Evaporation Due to Air Flow

Evaporation from a liquid pool can be determined by the following (Bird et al. 1960)

$$1 + \frac{(X_{ao}-X_{Ai})}{\frac{N_{AO}}{N_{AO}+N_{BO}}} = \exp \frac{(N_{ao} + N_{BO})}{K_x}$$

where

X_{ao} = mole fraction of species a at the interface (saturation conditions at the temperature of the pool).

X_{ai} = mole fraction of species a at a far distance from the interface.

N_{ao} = molar flux of component a, mol/ft^2-h.

N_{BO} = molar flux of component b. In this case, we are considering pure water so N_{BO} = 0.

K_x = mass transfer coefficient, mol/ft^2-h

The value for K_x is found in Perry (1951)

$$Kd = 0.68\ (Vd)^{0.65}$$

where

K = mass transfer coefficient lb-mol/h-ft^2
d = the diameter of the disk, in.
V = air velocity, ft/s

The correlation is based on flow over circular disks, but matches well with correlations for flow over rectangular basins. The outlet seal will be modeled as a series of disks 2.5 ft in diameter (the width of the seal). There are the fore 10 disks per seal. The air velocity is found by assuming that the flow area is 50 ft^2 and the flow rate is 35,000 ft^3/min. Given this flow area, the velocity is 12 ft/s. Solving for K yields 1.53.

In the upper equation, X_{ao} is found assuming 60 °F water in the seal and X_{ai} equal to zero. Under these conditions, there is 0.012 lb of water vapor per pound of dry air. Assuming, the mole fraction is small

$$X_{ao} = \frac{0.012}{1\ lb\ air}\left(\frac{1\ mol\ water}{18\ lb}\right)\left(\frac{29\ lb}{1\ mol\ air}\right) = 0.02$$

Solving for N_{ao} yields 0.03 lb-mol/ft^2-h. The area is 4.9 ft^2 per disk and 49 ft^2 total. The evaporation rate is then 1.47 lb-mol/h + 26 lb/h = 0.42 ft^3/h = 0.0086 in/h, or 0.2 in/d, or 6 in/mo. Experience is that the seal must be refilled every few months. In 3 months the exportation is 18 in. If X_{ai} is based on 50 percent relative humidity, its value is half that of X_{ao}, so the evaporation in 3 months is 9 in. This matches experience fairly well. Bird et al. (1960) also points out that a more rigorous formulation of the

evaporation equation for a similar problem as presented here results in evaporation rates about two-thirds of that predicted by the equation used here. Use of this equation would result in evaporation of about 6 in. in 3 months, or 2 in/mo.

REFERENCES

Bird, R. B., W. E. Stewart, and E. N. Lightfoot, 1960, *Transport Phenomena*, John Wiley and Sons, New York, New York, 1960.

Perry, J. H., 1951, *Chemical Engineering Handbook*, McGraw-Hill Company, New York, New York, 1951.

This page intentionally left blank.

APPENDIX E

MAXIMUM VELOCITY THROUGH A HOLE

This page intentionally left blank.

APPENDIX E

MAXIMUM VELOCITY THROUGH A HOLE

If a filter has a hole in it, the velocity through the hole will be greater than through the rest of the filter cell. The maximum flow will be that obtained assuming orifice flow. The flow rate is given by

$$q = 6.87\ Y\ do^2\ C\ (\Delta P \rho)^{0.5}$$

where

q = ft^3/s
Y = expansion coefficient = 1 for this case (Crane 1951, page A-22)
do^2 = hole diameter, in.
C = flow coefficient = 0.62
ΔP = pressure drop, lb/in^2
ρ = density, lb/ft^3 = 0.075

The flow area (in square feet) is given by

$$\frac{\pi}{4}\left(\frac{do}{12}\right)^2 = 0.00545\ do^2$$

So the flow velocity is given by

$$v = (0.00545)^{-1}(6.87)(1)(.62)\ (\Delta P\ (0.075))^{0.5}$$
$$= 214\ (\Delta P)^{0.5}$$

if the pressure drop is 1 in. of water (0.036 lb/in^2), the velocity is 40 ft/s or 27 mi/h.

REFERENCE

Crane, 1951, *Flow of Fluids through Valves, Fittings and Pipe*, Technical Paper No. 410, Crane Co., Chicago, Illinois, 1951.

This page intentionally left blank.

APPENDIX F

FILTER CELL CURIE LOADING FOUND FROM THE FLOODING OF A FILTER

This page intentionally left blank.

APPENDIX F

FILTER CELL CURIE LOADING FOUND FROM THE FLOODING OF A FILTER

The A filter cell was recently flooded such that 1-1/8 rows of filters (11 of the total of 80) were submerged (see Figure F-1). The liquid removed contained 2,400 Ci of ^{137}Cs and 175 Ci of ^{90}Sr. The cesium is probably in a soluble form as most cesium compounds are soluble. Some of the strontium compounds are soluble and some are not. If we assume that both cesium and strontium are soluble, the A filter cell would contain 17,000 Ci of ^{137}Cs and 1,250 Ci of ^{90}Sr. This compares to Gehrke's (Appendix B) values of 2,059 to 4,160 Ci ^{137}Cs and 475 to 45,143 Ci ^{90}Sr.

There is little effect on the final doses, however, because much of the strontium is insoluble (such that the actual values match that of Gehrke [Appendix B]) and the cesium values in Gehrke are low by a factor of 4. The onsite doses due to the evaporation accident would change by the following amount:

$$\frac{^{90}Sr}{154\ Ci}\ (3.8 \times 10^{-3}\ rem/Ci) = 0.58$$

$$\frac{^{137}Cs}{21\ Ci}\ (4)\ (5.6 \times 10^{-4}\ rem/Ci) = 0.047$$

Total	0.63
Dose per Section 6	0.60

If the loading specified in Gehrke (Appendix B) is used, the release is 0.12 percent of the entire inventory, or 68 Ci of ^{90}Sr and 103 Ci of ^{137}Cs. The onsite dose from this is 0.26 rem as compared with 0.63 rem using the "old inventories." The offsite ground contamination is 44 pCi/g or 0.45 of the allowable as compared with 0.25 of the allowable using the old inventories.

Figure F-1. Estimate of Wetted Cross Section for a Filter Flooding.

PER B.L. WALLACE:

INITIAL A FILTER LEVEL READING FROM INSTRUMENTATION (INTERMEDIATE SUMP) = 63 INCHES

CONVERTED TO ACTUAL INCHES WATER IN FILTER CELL = 63 (8/10) = 50.4 INCHES

DEPTH OF SUMP = 1'4" = 16 INCHES

= 50.4 - 16 = 34.4 => 34 INCHES WATER ABOVE FLOOR

PER H-2-32472:

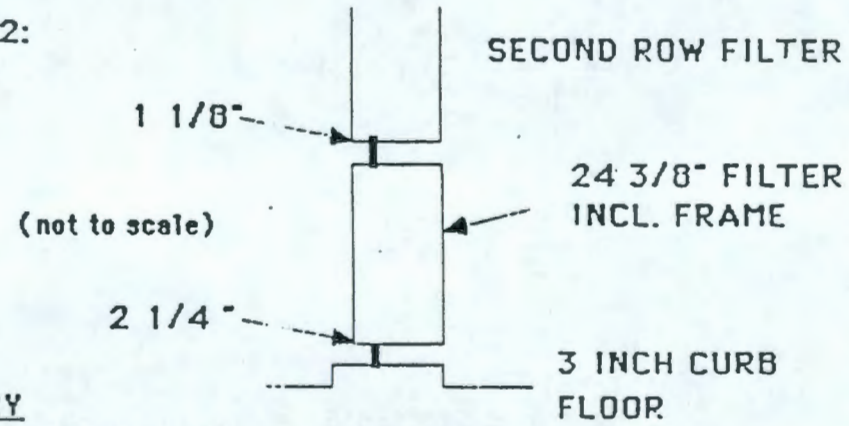

SUMMARY

34"	-	liquid level
30 3/4	-	bottom 2nd HEPA
29 5/8	-	top 1st HEPA
5 1/4	-	bottom 1st HEPA
3	-	top of curb
0	-	floor level
-16	-	bottom sump

CONCLUSION:

SECOND ROW HEPA FILTERS WERE SUBMERGED BY -

$$\frac{3\ 1/4}{24\ 3/8} = 0.13 = 13\ \%$$

ABOUT 1/8 OF SECOND ROW HEPAS WAS WETTED BASED ON STATIC LIQUID LEVEL

J.W. GEHRKE 1/13/93

APPENDIX G

DRAWINGS AND SCHEMATICS

This page intentionally left blank.

Figure G-1

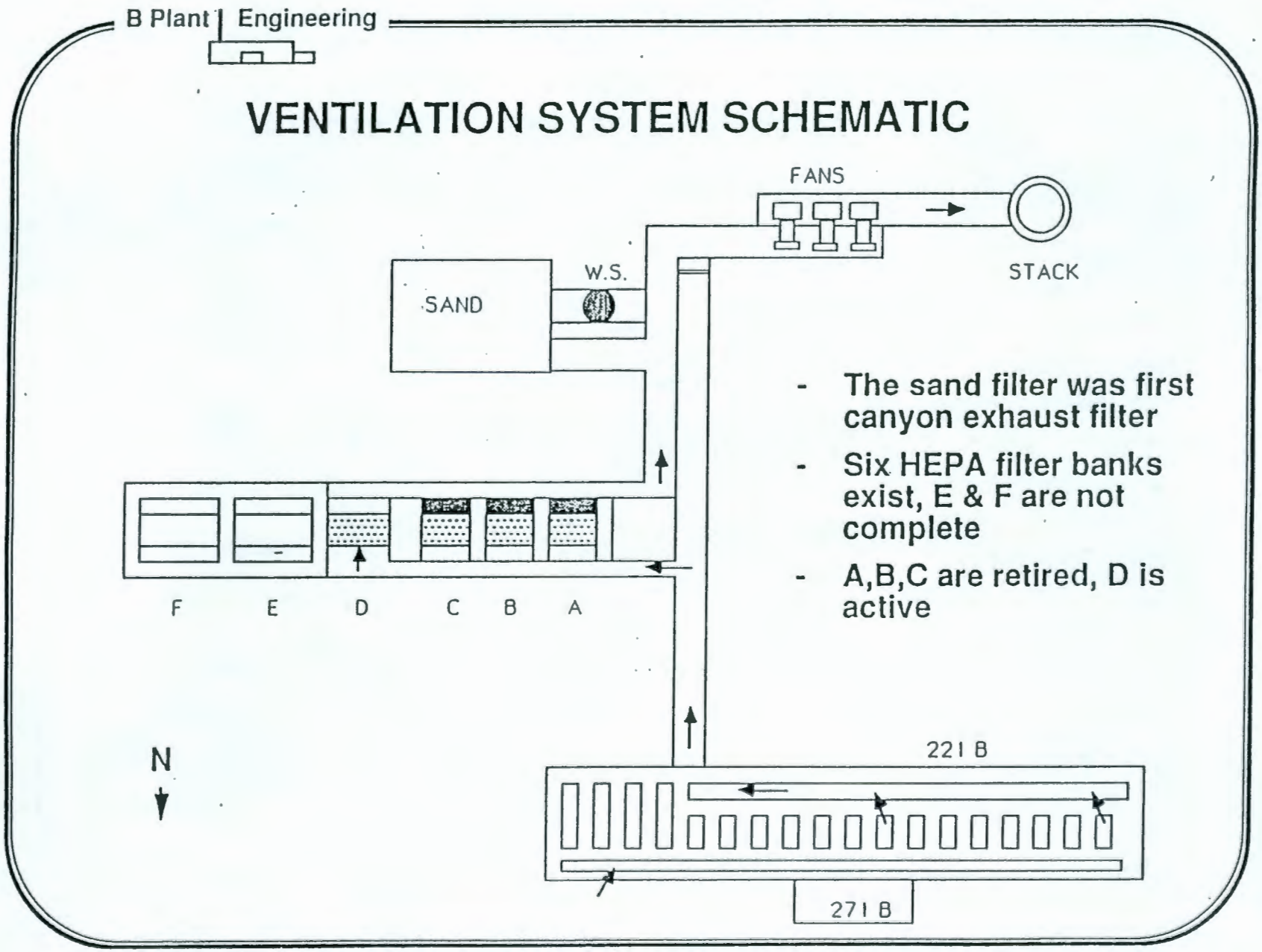
B Plant Engineering
VENTILATION SYSTEM SCHEMATIC
FANS
STACK
W.S.
SAND
F
E
D
C
B
A
N
221 B
271 B
- The sand filter was first canyon exhaust filter
- Six HEPA filter banks exist, E & F are not complete
- A,B,C are retired, D is active

Figure G-2

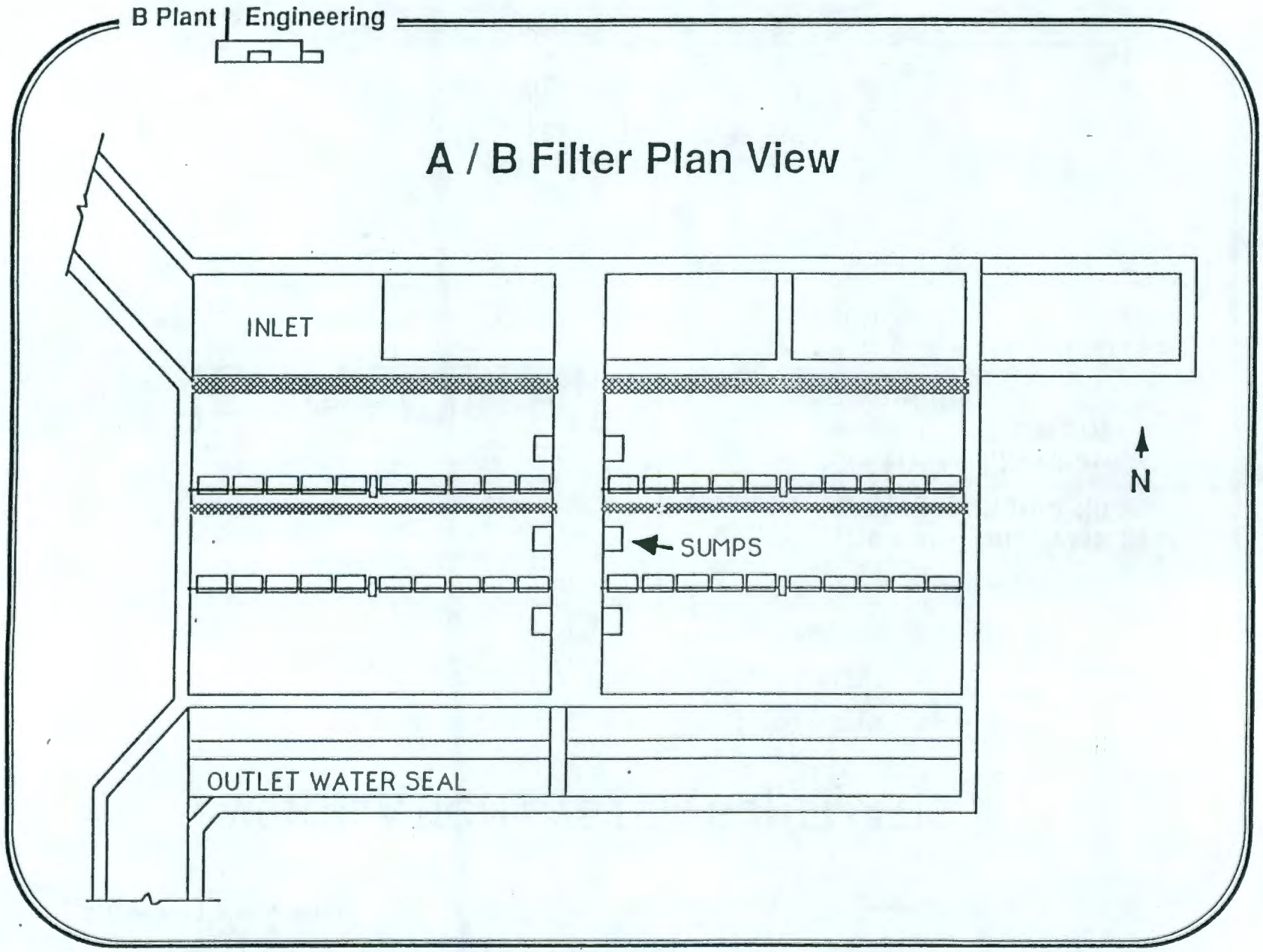
B Plant
Engineering
A / B Filter Plan View
INLET
SUMPS
N
OUTLET WATER SEAL

Figure G-3

B Plant | Engineering

A and B Filter Arrangement

- A and B were constructed together as the first module
- The design permitted isolation from, and expansion to future banks

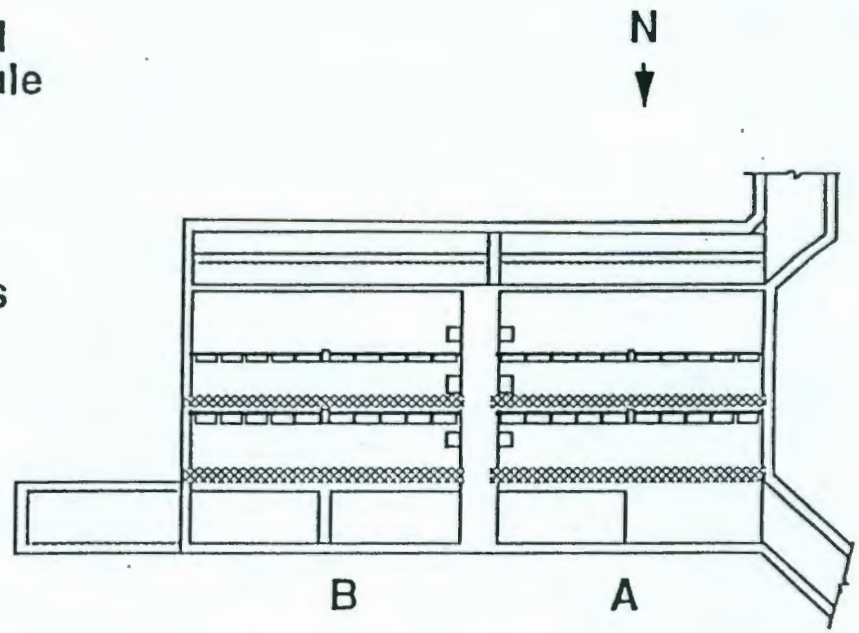

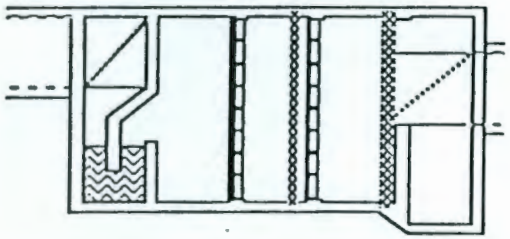

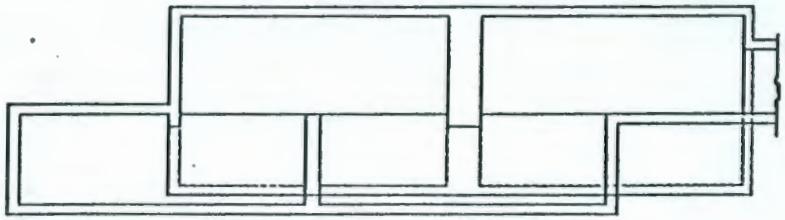

Figure G-4

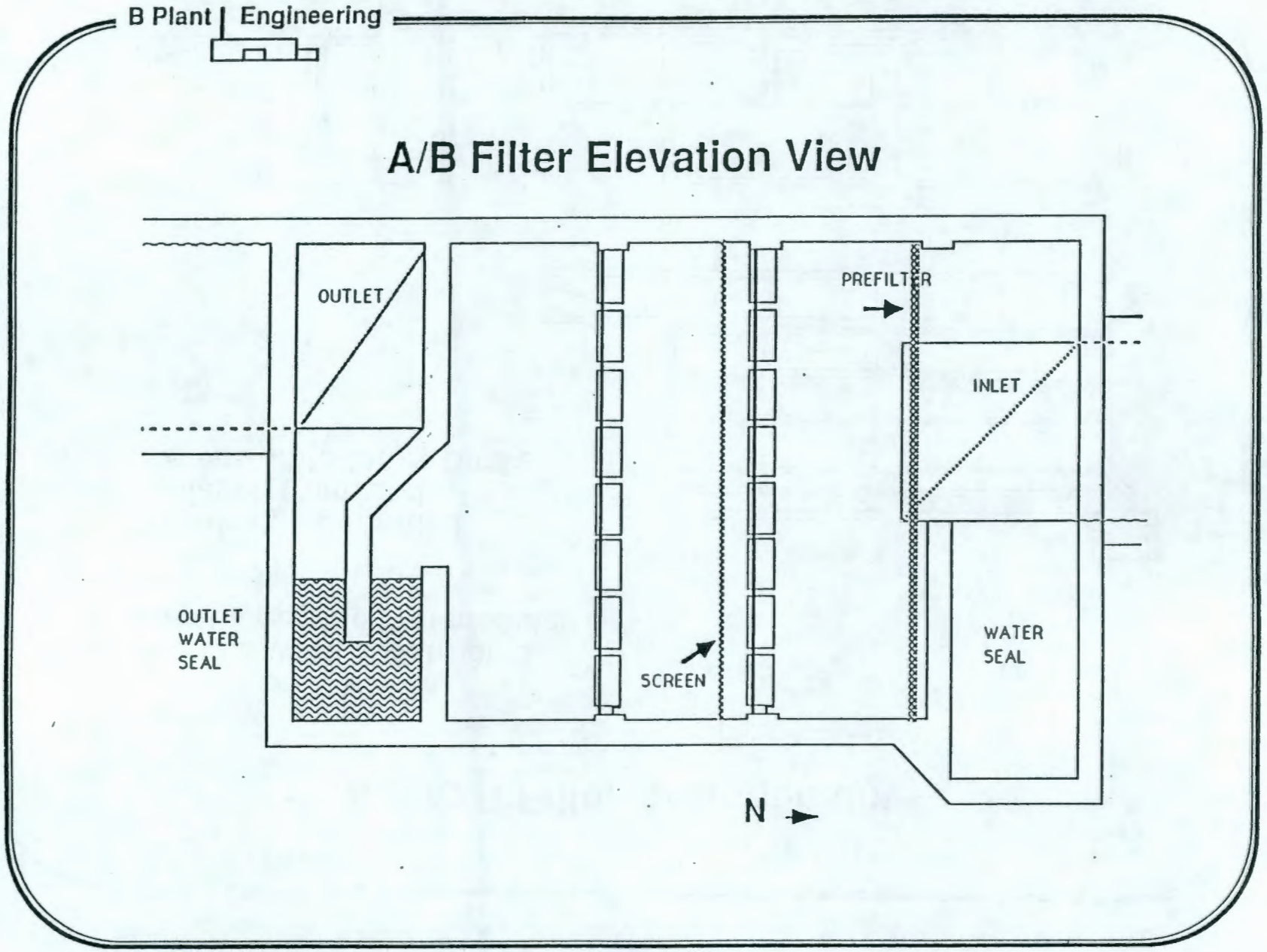
B Plant Engineering
A/B Filter Elevation View
OUTLET
PREFILTER
INLET
OUTLET
WATER
SEAL
SCREEN
WATER
SEAL
N

Figure G-5

B Plant | Engineering

A and B Filter Inlet

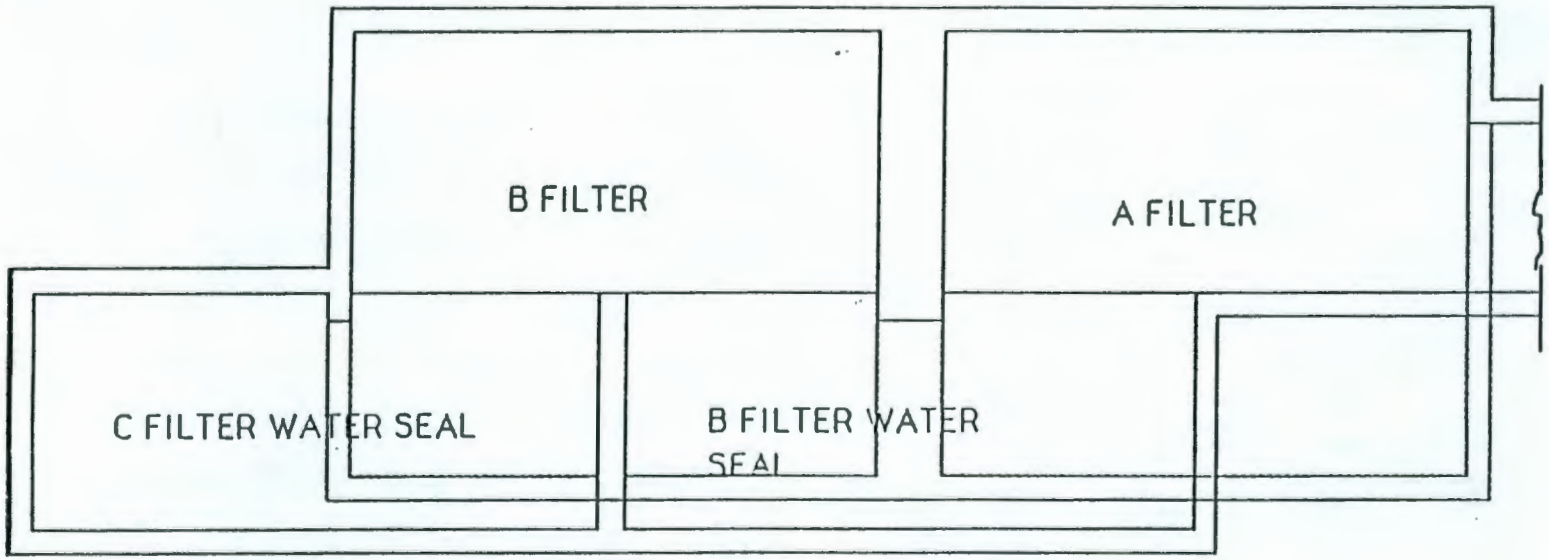

- THE B FILTER INLET SEAL FUNCTIONS TO ISOLATE B FILTER FROM FLOW ; C FILTER INLET SEAL ISOLATES C FILTER
- BPTH OF THESE INLET SEALS ARE EMPTY (OPEN) NOW

Figure G-6

B Plant Engineering

C Filter Configuration

- Designed as an annex to the A/B filter module
- Includes a large prefilter and a large open cell on inlet side
- An above grade building exists over the inlet area

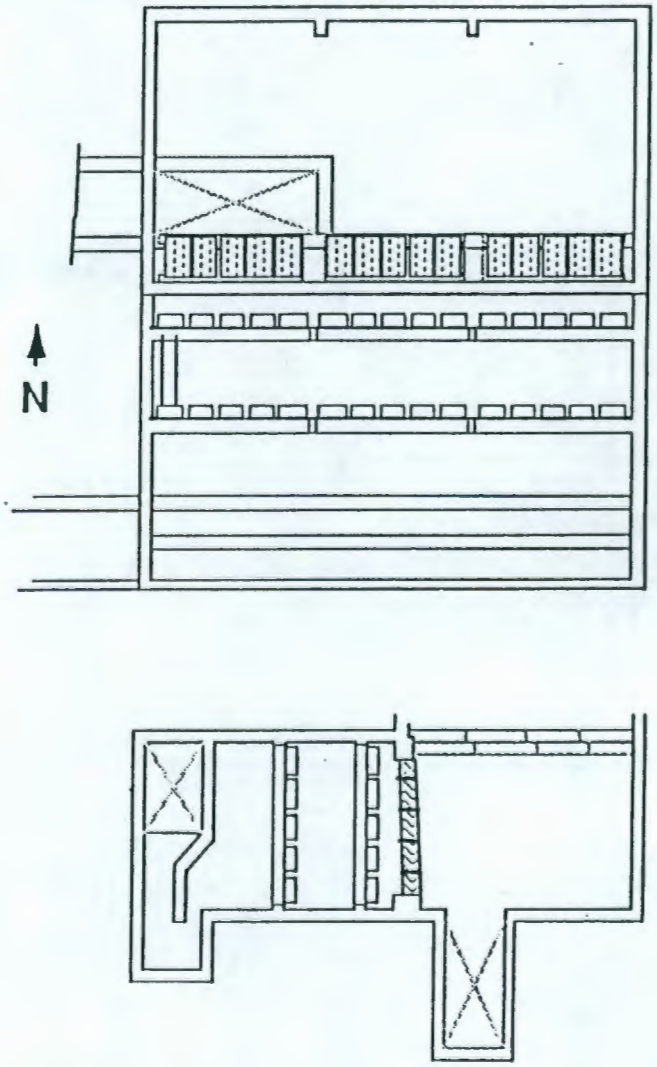

Figure G-7

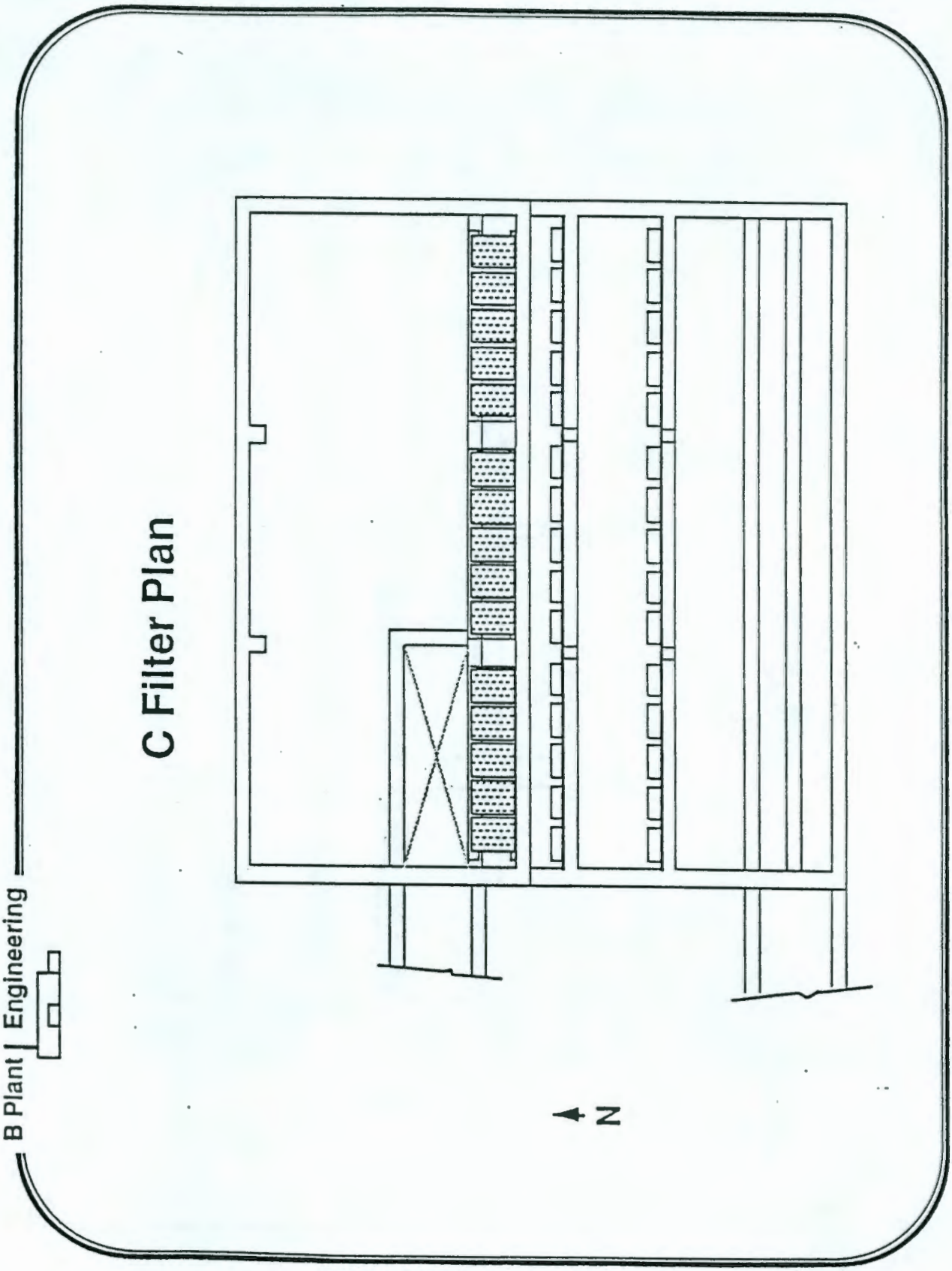

Figure G-8

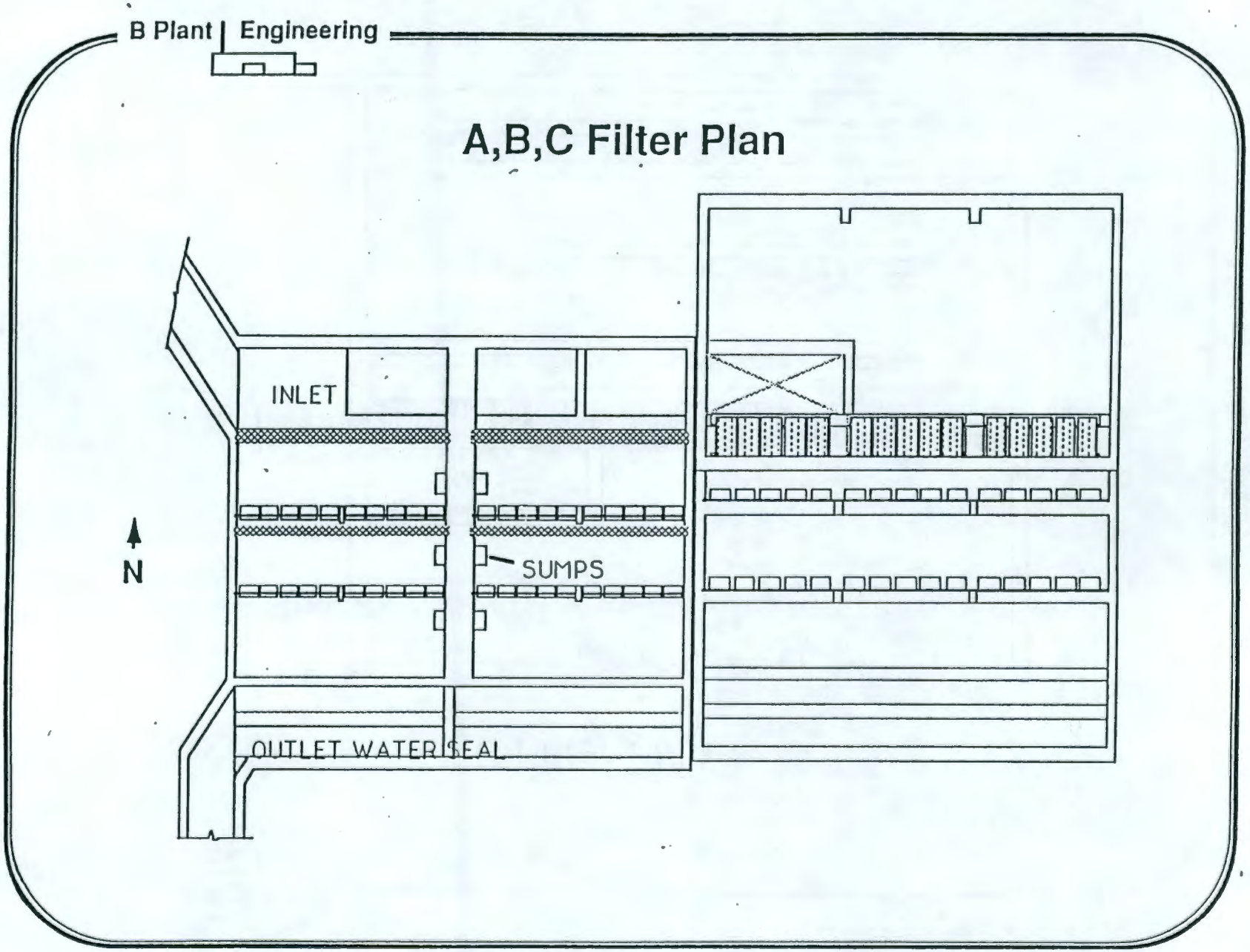
B Plant Engineering
A,B,C Filter Plan
INLET
SUMPS
OUTLET WATER SEAL
N

Figure G-9

B Plant | Engineering

D Filter Configuration

- D filter is the current operating filter bank
- Has 2 banks of prefilters with movable sections
- Has 3 banks of HEPA units with 1 movable section
- One prefilter and the movable first HEPA bank have been bypassed
- No inlet water seal exists

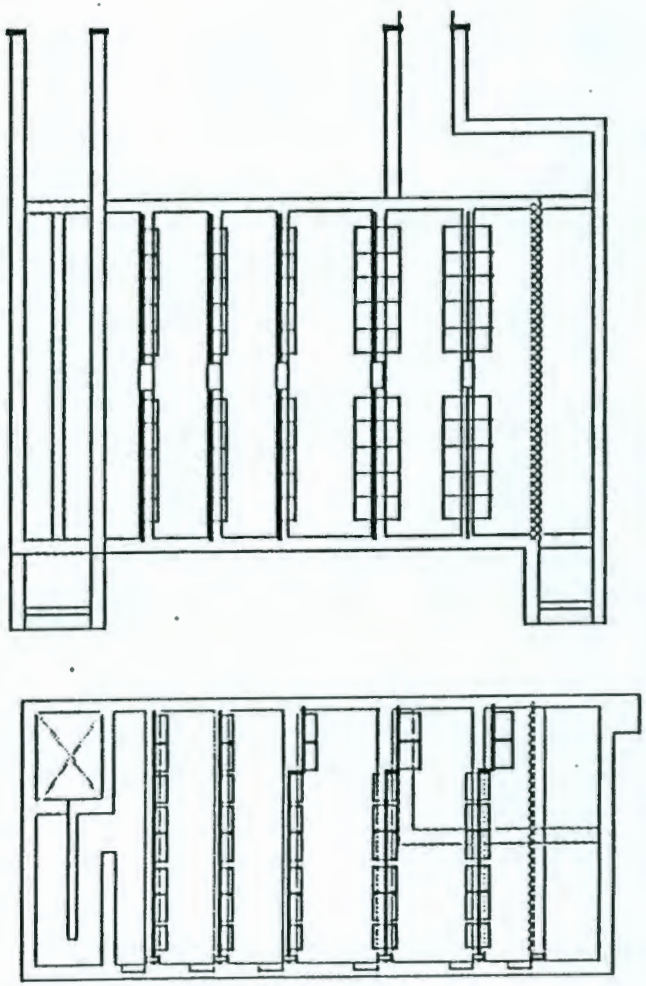

Figure G-10

B Plant Engineering

Outlet Water Seal Design

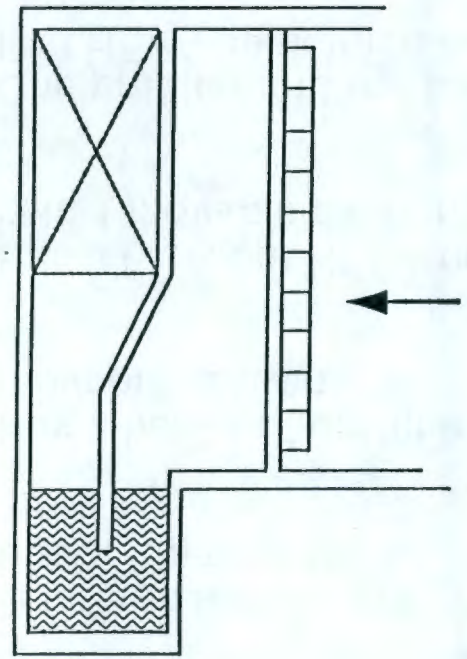

- THIS THE CONFIGURATION OF OUTLET WATER SEALS
- AIR FLOW IS FROM RIGHT TO LEFT
- WATER BLOCKS AIR FLOW UNTIL DIFFERENTIAL PRESS. EXCEEDS WATER HEIGHT

APPENDIX H

DOSE CONSEQUENCES FROM UNIT RELEASES

This page intentionally left blank.

Westinghouse
Hanford Company

Internal
Memo

From: Radiological & Toxicological Analysis 29250-AVS-92-009
Phone: 6-8191 N1-19
Date: December 1, 1992
Subject: RADIOLOGICAL DOSE ANALYSIS FOR B-PLANT HEPA FILTER RELEASE

To: R. M. Marusich H5-32

cc: R. G. Britton N1-19
J. C. Van Keuren N1-19
AVS/LB

The subject analysis you requested is attached. If you have any questions please call me at 6-8191.

Anthony V. Savino
Senior Engineer

Concurrence: John C. Van Keuren - Manager
Radiological & Toxicological Analysis

12/2/92
Date

Attachment

RADIOLOGICAL DOSE ANALYSIS FOR B-PLANT HEPA FILTER RELEASE

December 1, 1992

Radiological dose consequences have been calculated for customer-specified Cs-137 and Sr-90/Y-90 unit releases from HEPA filters at B-Plant in the 200 East area. These results will be used to prepare a response to an Unreviewed Safety Question.

Source Term Development:

The radioactivity at risk is contained in HEPA filters which are part of the ventilation system at B-Plant. The release inventory was specified by the customer in Marusich (1992) for the two cases of interest. Case 1 involves a 1 Ci release of Cs-137 and case 2 is for a 1 Ci release of both Sr-90 and Y-90. The dose consequences from the specified release will be scaled to the postulated release quantity when that quantity is determined at a later date.

Table 1: B-Plant HEPA Filter Release Quantities

Case	Radionuclides	Quantity (Ci)
1	Cs-137	1
2	Sr-90/Y-90	1 [a]

[a] Release of 1 Ci of Sr-90 and 1 Ci of Y-90.

It is conservatively assumed that the entire release is in the form of respirable (< 10 μm) particles.

Transport Assumptions:

Acute ground level and elevated (200 ft) release dispersion factors (X/Q) for a variety of nearby facilities were generated using the GENII dosimetry code (Napier), as shown in Tables 2 & 3. The distances were measured from building 291-BC, which contains the HEPA filters. As shown in Tables 2 & 3, the *worst case nearby onsite facility* location is building 2704-E in the S sector for ground releases and building 2711-E in the SSW sector for elevated releases.

In case it is later found that dose consequences are needed for the *nearest onsite receptor* being located 100 m from the release point (ground releases), or at the location of the maximum dose, which for stack releases is slightly beyond 100 m, these values will also be provided. The dispersion factors for these cases are listed in Tables 4 & 5 for ground and stack releases, respectively.

For the offsite receptor, X/Q values were calculated for 16 sectors at the site boundary for both ground and elevated releases. These results are summarized in Table 6. The X/Q values in Tables 2-6 are not corrected for building wake or plume meander effects.

Table 2: Acute 95 percentile X/Q values for the Onsite Receptor at Various Nearby Facilities for Ground Level Releases

Facility	Sector	Releases Distances (m)	Ground Level Releases (X/Q) (s/m^3)
HWVP	W	665	1.2E-03
209-E	E	830	6.4E-04
2400-E	ESE	900	3.7E-04
2704-E	S	610	1.3E-03 [a]
2711-E	SSW	620	1.2E-03
2721-EA	SW	1040	5.4E-04

[a] Maximum acute atmospheric dispersion coefficient.

Table 3: Acute 95 percentile X/Q values for the Onsite Receptor at Various Nearby Facilities for Elevated (200 ft) Releases

Facility	Sector	Releases Distances (m)	Ground Level Releases (X/Q) (s/m^3)
HWVP	W	665	3.1E-05
209-E	E	830	8.6E-06
2400-E	ESE	920	7.5E-06
2704-E	S	615	3.4E-05
2711-E	SSW	620	3.8E-05 [a]
2721-EA	SW	1040	2.9E-05

[a] Maximum acute atmospheric dispersion coefficient.

Table 4: Acute 95 percentile X/Q values for the Onsite Receptor at 100 m for Ground Level Releases

Sector	Ground level Releases (X/Q) (s/m^3)
S	2.9E-02
SSW	2.6E-02
SW	2.9E-02
WSW	3.1E-02
W	3.1E-02
WNW	3.3E-02 [a]
NW	3.0E-02
NNW	3.1E-02
N	3.3E-02
NNE	3.2E-02
NE	2.9E-02
ENE	2.3E-02
E	2.3E-02
ESE	1.5E-02
SE	1.5E-02
SSE	2.8E-02

[a] Maximum acute atmospheric dispersion coefficient.

Table 5: Acute 95 percentile X/Q values for the Onsite Receptor at Location of Maximum Dose for Elevated (200 ft) Releases

Sector	Release Distance (m)	Elevated Releases (X/Q) (s/m^3)
S	365	4.5E-05
SSW	305	4.9E-05
SW	290	5.5E-05 [a]
WSW	295	5.2E-05
W	305	4.9E-05
WNW	330	4.6E-05
NW	365	4.1E-05
NNW	365	3.6E-05
N	365	3.3E-05
NNE	335	2.2E-05
NE	280	1.7E-05
ENE	290	1.4E-05
E	365	1.1E-05
ESE	295	1.0E-05
SE	280	1.5E-05
SSE	365	3.2E-05

[a] Maximum acute atmospheric dispersion coefficient.

Table 6: Acute 95 percentile X/Q values at Site Boundary for Ground and Elevated (200 ft) Releases

Sector	Distance (km)	Ground level Releases (X/Q) (s/m^3)	Stack Releases (X/Q) (s/m^3)
S	20.9	8.5E-06	4.4E-06
SSW	17.1	9.8E-06	5.2E-06
SW	17.9	1.0E-05	5.5E-06
WSW	20.4	9.5E-06	5.0E-06
W	20.0	9.8E-06	5.6E-06 [a]
WNW	20.3	1.0E-05 [a]	5.5E-06
NW	21.1	8.9E-06	5.6E-06
NNW	21.1	9.2E-06	5.7E-06
N	24.3	8.4E-06	4.9E-06
NNE	26.3	7.2E-06	4.2E-06
NE	20.9	8.6E-06	4.5E-06
ENE	17.8	8.2E-06	4.4E-06
E	17.8	8.2E-06	4.6E-06
ESE	22.3	3.8E-06	2.9E-06
SE	27.2	2.9E-06	2.3E-06
SSE	21.6	7.8E-06	4.4E-06

[a] Maximum acute atmospheric dispersion coefficient.

Since the release is assumed to take place over a period of several hours, it is valid to take credit for corrections in atmospheric dispersion to account for plume meander due to changing wind direction. Plume meander effects were calculated in accordance with USNRC (1982) assuming a zero source area (ie, no building wake) and apply only to ground releases. Also, note that plume meander effects do not apply to submersion doses. The doses were calculated assuming a point source with no credit taken for fallout from the plume in transit to the receptor for both the ground and elevated releases.

Receptor Descriptions:

Onsite:

The *worst case nearby onsite facility* for ground releases was found to be building 2704-E which is 610 m from building 291-BC in the S sector, having an acute 95 percentile sector X/Q = 1.3E-3 s/m^3. The plume meander correction factor for 610 m is 4 (wind speed = 1 m/s, Class F stability), which results in a ground release X/Q value of 3.3E-4 s/m^3 for the *worst case nearby onsite facility*. For elevated releases, the *worst case nearby onsite facility* was building 2711-E, which is 620 m from building 291-BC in the SSW sector, with a X/Q = 3.8E-5 s/m^3.

If the *nearest onsite receptor* is considered to be at 100 m (for ground releases), the maximum X/Q is 3.3E-2 s/m^3 in the WNW. The plume meander correction factor for 100 m is 4 (wind speed = 1 m/s, Class F stability), which results in a ground release X/Q value of 8.3E-3 s/m^3 for the *nearest onsite receptor* at 100 m. For elevated releases, the *nearest onsite receptor* location (ie, location of maximum dose) was found to be 290 m from the release point in the SW sector with a X/Q of 5.5E-5 s/m^3.

Doses calculated for the onsite receptor include inhalation and submersion.

Site Boundary:

Receptor at the site boundary in the worst direction. This receptor is assumed to stay at this location for the duration of the accident. Doses calculated include inhalation and submersion. In this case, the maximum offsite receptor is 20.3 km WNW, with an acute 95 percentile sector X/Q = 1.0E-5 s/m^3 for ground releases, and 20.0 km W with a X/Q = 5.6E-6 s/m^3 for stack releases. The plume meander correction factor for 20.3 km is 1.16 (wind speed = 1 m/s, Class F stability), which results in a X/Q value of 8.6E-6 s/m^3 for ground releases.

Doses calculated for the offsite receptor include inhalation and submersion. No calculations were performed for the ingestion pathway receptor, per the customers request.

Code Documentation:

GENII version 1.485 (12/3/90) (Napier)	
GENII Default Parameter Values (28-Mar-90 RAP)	3-28-90
Radionuclide Master Library (11/15/90 PDR)	11-15-90
External Dose Factors for GENII in person Sv/yr per Bq/n (8-May-90	5-08-90
Internal Dose Increments, Worst Case Solubilities, 12/3/90 PDR	12-03-90
EXTGAM - Gamma Energies by Group for Finite Plume (13-May-90 RAP)	5-14-90
Food Transfer Factor Library - (RAP 29-Aug-88) (UPDATED LEACHING FA	8-29-88
200 AREA - 10 M - Pasquill A - F (1983 - 1987 Average)	
200 AREA - 61 M - Pasquill A - F (1983 - 1987 Average)	

GENII input files for Case 1 (1 Ci of Cs-137) are attached for reference.

Results:

The resulting dose consequences are shown in Tables 7 and 8, for Cases 1 and 2, respectively. Ground release dose consequences (except for submersion doses) reflect the use of the appropriate plume meander correction factor (ie, onsite = 4, offsite = 1.16). As such, the ground release consequences are scalable only to events with release times greater than 1 hour.

Table 7: Dose Consequences for B-Plant HEPA Filter Release for Case 1: 1 Ci of Cs-137

Receptor Location	Release Point	Dose Type	Dose (rem) EDE	Dose (rem) Limiting Organ
Worst Case Onsite Facility	Ground (610 m)	Inhalation	3.3E-3	3.8E-3 (S Int)
		Submersion	1.2E-5	1.2E-5
		* Total	3.3E-3	3.8E-3 (S Int)
Worst Case Onsite Facility	Stack (620 m)	Inhalation	3.6E-4	4.0E-4 (S Int)
		Submersion	2.2E-6	2.2E-6
		* Total	3.6E-4	4.0E-4 (S Int)
Maximum Onsite Receptor	Ground (100 m)	Inhalation	8.3E-2	9.3E-2 (S Int)
		Submersion	7.6E-5	7.6E-5
		* Total	8.3E-2	9.3E-2 (S Int)
Maximum Onsite Receptor	Stack (290 m)	Inhalation	5.4E-4	6.0E-4 (S Int)
		Submersion	2.4E-6	2.4E-6
		* Total	5.4E-4	6.0E-4 (S Int)
Maximum Offsite Receptor	Ground (20.3 km)	Inhalation	8.6E-5	9.5E-5 (S Int)
		Submersion	1.2E-6	1.2E-6
		* Total	8.7E-5	9.6E-5 (S Int)
Maximum Offsite Receptor	Stack (20.0 km)	Inhalation	5.7E-5	6.4E-5 (S Int)
		Submersion	6.6E-7	6.6E-7
		* Total	5.8E-5	6.5E-5 (S Int)

Table 8: Dose Consequences for B-Plant HEPA Filter Release for Case 2: 1 Ci of Sr-90 & Y-90

Receptor Location	Release Point	Dose Type	Dose (rem) EDE	Dose (rem) Limiting Organ
Worst Case Onsite Facility	Ground (610 m)	Inhalation	2.3E-2	2.8E-1 (B Sur)
		Submersion	2.0E-6	2.0E-6
		* Total	2.3E-2	2.8E-1 (B Sur)
Worst Case Onsite Facility	Stack (620 m)	Inhalation	2.5E-3	2.9E-2 (B Sur)
		Submersion	5.8E-8	5.8E-8
		* Total	2.5E-3	2.9E-2 (B Sur)
Maximum Onsite Receptor	Ground (100 m)	Inhalation	5.8E-1	6.5E+0 (B Sur)
		Submersion	5.3E-5	5.3E-5
		* Total	5.8E-1	6.5E+0 (B Sur)
Maximum Onsite Receptor	Stack (290 m)	Inhalation	3.8E-3	4.3E-2 (B Sur)
		Submersion	8.2E-8	8.2E-8
		* Total	3.8E-3	4.3E-2 (B Sur)
Maximum Offsite Receptor	Ground (20.3 km)	Inhalation	6.2E-4	7.1E-3 (B Sur)
		Submersion	1.6E-8	1.6E-8
		* Total	6.2E-4	7.1E-3 (B Sur)
Maximum Offsite Receptor	Stack (20.0 km)	Inhalation	4.0E-4	4.6E-3 (B Sur)
		Submersion	8.7E-9	8.7E-9
		* Total	4.0E-4	4.6E-3 (B Sur)

GROUND CONTAMINATION

Calculations were also performed to provide a conservative estimate of the offsite ground contamination which may result from postulated airborne releases from the B-Plant HEPA filters during accident conditions. Table 6 identifies the maximum X/Q values at the site boundary for ground level (X/Q = 1.0E-5 s/m^3) and stack (X/Q = 5.6E-6 s/m^3) releases. By including the offsite plume meander correction factor of 1.16, the X/Q becomes 8.6E-6 s/m^3 for ground level releases.

For Cases 1 and 2, ground contamination concentrations were calculated using the following expression:

$$D = Q \cdot \frac{X}{Q} \cdot Vd \cdot Fd,$$

where,
D = dry deposition (Ci/m^2),
Q = airborne release (Ci),
X/Q = atmospheric dispersion (s/m^3),
Vd = deposition velocity (m/s) (Napier 1988),
Fd = plume depletion factor (NRC 1977).

For Cs-137, Sr-90 & Y-90, the deposition velocity is 0.001 m/s (Napier 1988). From Regulatory Guide 1.111 (NRC 1977), the plume depletion factor for 20.3 km and 20.0 km is essentially the same (0.64). The only variable for the ground contamination calculations is the X/Q value, which depends only on whether the release is at ground level or is elevated. The results using the above equation are provided in Table 9. In order to compare the ground contamination concentrations with their respective limits, the results must be converted to units of pCi/g. This is accomplished by making assumptions about the soil density and ground contamination depth. The following assumptions were used:

1) density of site-boundary soil = 1.4 g/cc (Marks' 1986)
2) ground contamination depth = 1.0 cm (engineering judgment)

In Table K-1, Part K, of WHC-CM-7-5 (WHC 1988), ground contamination threshold values are provided for several radionuclides. If a release occurs causing the offsite ground contamination to exceed 20 times the threshold values, the system, components, and structures whose failure could cause the release must be designed to Safety Class 1 criteria. For comparison purposes, the values corresponding to 20 times the threshold limit, which corresponds to Safety Class 1 for offsite ground contamination, are also provided in Table 9. Note that Table K-1 of WHC (1988) does not contain a separate limit for Y-90 since the limit assumes that equilibrium concentrations of Sr-90 and it's daughter Y-90 exists. Therefore, Y-90 ground contamination is not shown. Note also that since a plume meander correction factor is applied to the ground level release consequences, the ground level release results in Table 9 are scalable only to events with release times greater than one hour.

Table 9: Offsite Ground Contamination for 1 Ci Releases

Radio-nuclide	Release Point	Dist (km)	Max. X/Q (s/m^3)	Ground [a] Contam. ($\mu Ci/m^2$)	Ground [b] Contam. (pCi/g)	20 times Table K-1 Threshold (pCi/g)
Cs-137	Ground	20.3 (WNW)	8.6E-6	5.5E-3	3.9E-1	60
Sr-90 [c]	Ground	20.3 (WNW)	8.6E-6	5.5E-3	3.9E-1	260
Cs-137	Stack	20.0 (W)	5.6E-6	3.6E-3	2.6E-1	60
Sr-90 [c]	Stack	20.0 (W)	5.6E-6	3.6E-3	2.6E-1	260

[a] For all cases, the deposition velocity was 0.001 m/s and the plume depletion factor was 0.64.

[b] Offsite soil density is 1.4 g/cc and ground contamination depth is 1 cm.

[c] Table K-1 of WHC (1988) does not contain a separate limit for Y-90. Note that in equilibrium conditions, Y-90 would be present in the same concentration as Sr-90.

References:

Marks', 1986, Avallone, E. A. and T. Baumeister III, *Marks' Standard Handbook for Mechanical Engineers*, Ninth ed., McGraw-Hill Book Company, New York, NY.

Marusich, R. M., 1992, DSI to L. S. Semmens, "Dose Consequences for B-Plant USQ," Safety Analysis and Engineering, dated November 19, 1992.

Napier, B. A., et al., 1988, *GENII - The Hanford Environmental Radiation Dosimetry Software System*, PNL-6584, Pacific Northwest Laboratory, Richland, WA.

NRC, 1977, Methods for Estimating Atmospheric Transport and Dispersion of Gaseous Effluents in Routine Releases from Light-Water-Cooled Reactors, Nuclear Regulatory Commission, Regulatory Guide 1.111, Washington, DC. Software System, PNL-6484, Dec. 1988.

WHC, 1988, *Environmental Compliance Manual*, Westinghouse Hanford Company, Richland WA, WHC-CM-7-5, Part K, Rev. 0.

WHC, 1992, *Nonreactor Facility Safety Analysis Manual*, Westinghouse Hanford Co., WHC-CM-4-46, September, 1988.

USNRC, 1982, *Regulatory Guide 1.145, Atmospheric Dispersion Models for Potential Accident Consequence Assessments at Nuclear Power Plants*, USNRC, Rev. 1, November, 1982.

GENII Input File
Worst Case Onsite Facility Ground Release - Inhalation & Submersion

```
########################## Program GENII Input File ############  8 Jul 88 ####
Title: Onsite, Inh & Sub, Acute, Ground Release - B Plant HEPA Filter
       \SAMPL\G-AIR.AC                          Created on 01-22-1990 at 07:30
OPTIONS========================= Default ====================================
F    Near-field scenario?       (Far-field)    NEAR-FIELD: narrowly-focused
F    Population dose?          (Individual)                release, single site
T    Acute release?              (Chronic)     FAR-FIELD:  wide-scale release,
     Maximum Individual data set used                      multiple sites
                                Complete                                  Complete
TRANSPORT OPTIONS============ Section   EXPOSURE PATHWAY OPTIONS===== Section
T  Air Transport                  1     T  Finite plume, external        5
F  Surface Water Transport        2     F  Infinite plume, external      5
F  Biotic Transport (near-field)  3,4   F  Ground, external              5
F  Waste Form Degradation (near)  3,4   F  Recreation, external          5
                                        T  Inhalation uptake             5,6
REPORT OPTIONS======================    F  Drinking water ingestion      7,8
T  Report AEDE only                     F  Aquatic foods ingestion       7,8
F  Report by radionuclide               F  Terrestrial foods ingestion   7,9
F  Report by exposure pathway           F  Animal product ingestion      7,10
F  Debug report on screen               F  Inadvertent soil ingestion

INVENTORY ##########################################################################

 4   Inventory input activity units: (1-pCi  2-uCi  3-mCi  4-Ci  5-Bq)
 0   Surface soil source units (1- m2  2- m3  3- kg)
     Equilibrium question goes here

     --------|----Release Terms------|----------Basic Concentrations---------|
     Use when|  transport selected   |  near-field scenario, optionally      |
     --------|-----------------------|---------------------------------------|
     Release |        Surface Buried |        Surface Deep    Ground  Surface |
     Radio-  |Air     Water   Waste  |Air     Soil    Soil    Water   Water  |
     nuclide |/yr     /yr     /m3    |/m3     /unit   /m3     /L      /L     |
     --------|------- ------- -------|------- ------- ------- ------- -------|
     CS137   1.0

     --------|----Derived Concentrations-----|
     Use when|   measured values are known   |
     --------|-------------------------------|
     Release |Terres. Animal  Drink   Aquatic|
     Radio-  |Plant   Product Water   Food   |
     nuclide |/kg     /kg     /L      /kg    |
     --------|------- ------- ------- -------|

TIME ###############################################################################

1    Intake ends after (yr)
50   Dose calc. ends after (yr)
1    Release ends after (yr)
0    No. of years of air deposition prior to the intake period
```

```
0    No. of years of irrigation water deposition prior to the intake period

FAR-FIELD SCENARIOS (IF POPULATION DOSE) ####################################

0          Definition option: 1-Use population grid in file POP.IN
0                             2-Use total entered on this line

NEAR-FIELD SCENARIOS ########################################################

           Prior to the beginning of the intake period: (yr)
0            When was the inventory disposed?  (Package degradation starts)
0            When was LOIC?  (Biotic transport starts)
0          Fraction of roots in upper soil (top 15 cm)
0          Fraction of roots in deep soil
0          Manual redistribution: deep soil/surface soil dilution factor
0          Source area for external dose modification factor (m2)
TRANSPORT ###################################################################
           ====AIR TRANSPORT=====================================SECTION 1=====
                   0-Calculate PM                |0        Release type (0-3)
3          Option: 1-Use chi/Q or PM value      |F        Stack release (T/F)
                   2-Select MI dist & dir       |0        Stack height (m)
                   3-Specify MI dist & dir      |0        Stack flow (m3/sec)
0          Chi/Q or PM value                    |0        Stack radius (m)
1          MI sector index (1=S)                |0        Effluent temp. (C)
610.       MI distance from release point (m)   |0        Building x-section (m2)
T          Use jf data, (T/F) else chi/Q grid   |0        Building height (m)

           ====SURFACE WATER TRANSPORT==========================SECTION 2=====
0          Mixing ratio model: 0-use value, 1-river, 2-lake
0          Mixing ratio, dimensionless
0          Average river flow rate for: MIXFLG=0 (m3/s), MIXFLG=1,2 (m/s),
0          Transit time to irrigation withdrawl location (hr)
           If mixing ratio model > 0:
0            Rate of effluent discharge to receiving water body (m3/s)
0            Longshore distance from release point to usage location (m)
0            Offshore distance to the water intake (m)
0            Average water depth in surface water body (m)
0            Average river width (m), MIXFLG=1 only
0            Depth of effluent discharge point to surface water (m), lake only

           ====WASTE FORM AVAILABILITY==========================SECTION 3=====
0          Waste form/package half life, (yr)
0          Waste thickness, (m)
0          Depth of soil overburden, m

           ====BIOTIC TRANSPORT OF BURIED SOURCE================SECTION 4=====
T          Consider during inventory decay/buildup period (T/F)?
T          Consider during intake period (T/F)?     | 1-Arid non agricultural
0          Pre-Intake site condition.............   | 2-Humid non agricultural
                                                    | 3-Agricultural

EXPOSURE ####################################################################
```

```
          ====EXTERNAL EXPOSURE================================SECTION 5=====
          Exposure time:                  |  Residential irrigation:
0           Plume (hr)                    |T        Consider: (T/F)
0           Soil contamination (hr)       |0        Source: 1-ground water
0           Swimming (hr)                 |                 2-surface water
0           Boating (hr)                  |0        Application rate (in/yr)
0           Shoreline activities (hr)     |0        Duration (mo/yr)
0         Shoreline type: (1-river, 2-lake, 3-ocean, 4-tidal basin)
0         Transit time for release to reach aquatic recreation (hr)
1.0       Average fraction of time submersed in acute cloud (hr/person hr)

          ====INHALATION=======================================SECTION 6=====
8766.0    Hours of exposure to contamination per year
0         0-No resus-  1-Use Mass Loading          2-Use Anspaugh model
0           pension      Mass loading factor (g/m3)   Top soil available (cm)

          ====INGESTION POPULATION=============================SECTION 7=====
0         Atmospheric production definition (select option):
0           0-Use food-weighted chi/Q, (food-sec/m3), enter value on this line
            1-Use population-weighted chi/Q
            2-Use uniform production
            3-Use chi/Q and production grids (PRODUCTION will be overridden)
0         Population ingesting aquatic foods, 0 defaults to total (person)
0         Population ingesting drinking water, 0 defaults to total (person)
F         Consider dose from food exported out of region (default=F)

          Note below: S* or Source: 0-none, 1-ground water, 2-surface water
                                    3-Derived concentration entered above
          ==== AQUATIC FOODS / DRINKING WATER INGESTION=========SECTION 8====

F         Salt water? (default is fresh)
```

USE ? T/F	FOOD TYPE	TRAN-SIT hr	PROD-UCTION kg/yr	-CONSUMPTION- HOLDUP da	RATE kg/yr	DRINKING WATER	
F	FISH	0.00	0.0E+00	0.00	0.0	0	Source (see above)
F	MOLLUS	0.00	0.0E+00	0.00	0.0	T	Treatment? T/F
F	CRUSTA	0.00	0.0E+00	0.00	0.0	0	Holdup/transit(da)
F	PLANTS	0.00	0.0E+00	0.00	0.0	0	Consumption (L/yr)

```
          ====TERRESTRIAL FOOD INGESTION=======================SECTION 9=====
```

USE ? T/F	FOOD TYPE	GROW TIME da	S *	--IRRIGATION-- RATE in/yr	TIME mo/yr	YIELD kg/m2	PROD-UCTION kg/yr	--CONSUMPTION-- HOLDUP da	RATE kg/yr
F	LEAF V	0.00	0	0.0	0.0	0.0	0.0E+00	0.0	0.0
F	ROOT V	0.00	0	0.0	0.0	0.0	0.0E+00	0.0	0.0
F	FRUIT	0.00	0	0.0	0.0	0.0	0.0E+00	0.0	0.0
F	GRAIN	0.00	0	0.0	0.0	0.0	0.0E+00	0.0	0.0

```
          ====ANIMAL PRODUCTION CONSUMPTION====================SECTION 10====
```

USE ? T/F	FOOD TYPE	---HUMAN---- CONSUMPTION RATE kg/yr	HOLDUP da	TOTAL PROD-UCTION kg/yr	DRINK WATER CONTAM FRACT.	----------STORED FEED---------- DIET FRAC-TION	GROW TIME da	-IRRIGATION-- S *	RATE in/yr	TIME mo/yr	YIELD kg/m3	STOR-AGE da
F	BEEF	0.0	0.0	0.00	0.00	0.00	0.0	0	0.0	0.00	0.00	0.0
F	POULTR	0.0	0.0	0.00	0.00	0.00	0.0	0	0.0	0.00	0.00	0.0
F	MILK	0.0	0.0	0.00	0.00	0.00	0.0	0	0.0	0.00	0.00	0.0
F	EGG	0.0	0.0	0.00	0.00	0.00	0.0	0	0.0	0.00	0.00	0.0
						----------FRESH FORAGE----------						
	BEEF					0.00	0.0	0	0.0	0.00	0.00	0.0
	MILK					0.00	0.0	0	0.0	0.00	0.00	0.0

##

GENII Input File
Worst Case Onsite Facility Stack Release - Inhalation & Submersion

```
########################## Program GENII Input File ############  8 Jul 88 ####
Title: Onsite, Inh & Sub, Acute, 200 ft Release - B Plant HEPA Filter
       \SAMPL\S-AIR.AC                                Created on 01-22-1990 at 07:30
OPTIONS========================= Default ====================================
F    Near-field scenario?       (Far-field)    NEAR-FIELD: narrowly-focused
F    Population dose?          (Individual)                release, single site
T    Acute release?              (Chronic)     FAR-FIELD:  wide-scale release,
     Maximum Individual data set used                      multiple sites
                                Complete                                   Complete
TRANSPORT OPTIONS============ Section   EXPOSURE PATHWAY OPTIONS===== Section
T  Air Transport                  1     T  Finite plume, external        5
F  Surface Water Transport        2     F  Infinite plume, external      5
F  Biotic Transport (near-field)  3,4   F  Ground, external              5
F  Waste Form Degradation (near)  3,4   F  Recreation, external          5
                                        T  Inhalation uptake             5,6
REPORT OPTIONS========================  F  Drinking water ingestion      7,8
T  Report AEDE only                     F  Aquatic foods ingestion       7,8
F  Report by radionuclide               F  Terrestrial foods ingestion   7,9
F  Report by exposure pathway           F  Animal product ingestion      7,10
F  Debug report on screen               F  Inadvertent soil ingestion

INVENTORY ##############################################################

 4   Inventory input activity units: (1-pCi  2-uCi  3-mCi  4-Ci  5-Bq)
 0   Surface soil source units (1- m2  2- m3  3- kg)
     Equilibrium question goes here

     --------|----Release Terms------|----------Basic Concentrations---------|
     Use when|  transport selected   |  near-field scenario, optionally      |
     --------|-----------------------|---------------------------------------|
     Release |        Surface Buried |        Surface Deep    Ground  Surface |
     Radio-  |Air     Water   Waste  |Air     Soil    Soil    Water   Water  |
     nuclide |/yr     /yr     /m3    |/m3     /unit   /m3     /L      /L     |
     --------|------- ------- -------|------- ------- ------- ------- -------|
     CS137   1.0

     --------|----Derived Concentrations-----|
     Use when|   measured values are known   |
     --------|-------------------------------|
     Release |Terres. Animal  Drink   Aquatic|
     Radio-  |Plant   Product Water   Food   |
     nuclide |/kg     /kg     /L      /kg    |
     --------|------- ------- ------- -------|

TIME ###############################################################

 1   Intake ends after (yr)
 50  Dose calc. ends after (yr)
 1   Release ends after (yr)
 0   No. of years of air deposition prior to the intake period
```

```
0    No. of years of irrigation water deposition prior to the intake period

FAR-FIELD SCENARIOS (IF POPULATION DOSE) ####################################

0          Definition option: 1-Use population grid in file POP.IN
0                             2-Use total entered on this line

NEAR-FIELD SCENARIOS ########################################################

           Prior to the beginning of the intake period: (yr)
0            When was the inventory disposed?  (Package degradation starts)
0            When was LOIC?  (Biotic transport starts)
0          Fraction of roots in upper soil (top 15 cm)
0          Fraction of roots in deep soil
0          Manual redistribution: deep soil/surface soil dilution factor
0          Source area for external dose modification factor (m2)
TRANSPORT ###################################################################
           ====AIR TRANSPORT=================================SECTION 1=====
                   0-Calculate PM              |1        Release type (0-3)
3          Option: 1-Use chi/Q or PM value     |T        Stack release (T/F)
                   2-Select MI dist & dir      |61.0     Stack height (m)
                   3-Specify MI dist & dir     |0        Stack flow (m3/sec)
0          Chi/Q or PM value                   |0        Stack radius (m)
2          MI sector index (1=S)               |0        Effluent temp. (C)
620.       MI distance from release point (m)  |0        Building x-section (m2)
T          Use jf data, (T/F) else chi/Q grid  |0        Building height (m)

           ====SURFACE WATER TRANSPORT=======================SECTION 2=====
0          Mixing ratio model: 0-use value, 1-river, 2-lake
0          Mixing ratio, dimensionless
0          Average river flow rate for: MIXFLG=0 (m3/s), MIXFLG=1,2 (m/s),
0          Transit time to irrigation withdrawl location (hr)
           If mixing ratio model > 0:
0            Rate of effluent discharge to receiving water body (m3/s)
0            Longshore distance from release point to usage location (m)
0            Offshore distance to the water intake (m)
0            Average water depth in surface water body (m)
0            Average river width (m), MIXFLG=1 only
0            Depth of effluent discharge point to surface water (m), lake only

           ====WASTE FORM AVAILABILITY=======================SECTION 3=====
0          Waste form/package half life, (yr)
0          Waste thickness, (m)
0          Depth of soil overburden, m

           ====BIOTIC TRANSPORT OF BURIED SOURCE=============SECTION 4=====
T          Consider during inventory decay/buildup period (T/F)?
T          Consider during intake period (T/F)?   | 1-Arid non agricultural
0
           Pre-Intake site condition..............| 2-Humid non agricultural
                                                  | 3-Agricultural

EXPOSURE ####################################################################
```

```
      ====EXTERNAL EXPOSURE================================SECTION 5=====
      Exposure time:                    |  Residential irrigation:
0       Plume (hr)                      | T        Consider: (T/F)
0       Soil contamination (hr)         | 0        Source: 1-ground water
0       Swimming (hr)                   |                  2-surface water
0       Boating (hr)                    | 0        Application rate (in/yr)
0       Shoreline activities (hr)       | 0        Duration (mo/yr)
0     Shoreline type: (1-river, 2-lake, 3-ocean, 4-tidal basin)
0     Transit time for release to reach aquatic recreation (hr)
1.0   Average fraction of time submersed in acute cloud (hr/person hr)

      ====INHALATION=======================================SECTION 6=====
8766.0 Hours of exposure to contamination per year
0     0-No resus-  1-Use Mass Loading          2-Use Anspaugh model
0       pension      Mass loading factor (g/m3)   Top soil available (cm)

      ====INGESTION POPULATION=============================SECTION 7=====
0     Atmospheric production definition (select option):
0       0-Use food-weighted chi/Q, (food-sec/m3), enter value on this line
        1-Use population-weighted chi/Q
        2-Use uniform production
        3-Use chi/Q and production grids (PRODUCTION will be overridden)
0     Population ingesting aquatic foods, 0 defaults to total (person)
0     Population ingesting drinking water, 0 defaults to total (person)
F     Consider dose from food exported out of region (default=F)

      Note below: S* or Source: 0-none, 1-ground water, 2-surface water
                                3-Derived concentration entered above
      ==== AQUATIC FOODS / DRINKING WATER INGESTION=========SECTION 8====

F     Salt water? (default is fresh)
```

USE ? T/F	FOOD TYPE	TRAN-SIT hr	PROD-UCTION kg/yr	-CONSUMPTION- HOLDUP da	RATE kg/yr	DRINKING WATER	
F	FISH	0.00	0.0E+00	0.00	0.0	0	Source (see above)
F	MOLLUS	0.00	0.0E+00	0.00	0.0	T	Treatment? T/F
F	CRUSTA	0.00	0.0E+00	0.00	0.0	0	Holdup/transit(da)
F	PLANTS	0.00	0.0E+00	0.00	0.0	0	Consumption (L/yr)

```
      ====TERRESTRIAL FOOD INGESTION=======================SECTION 9=====
```

USE ? T/F	FOOD TYPE	GROW TIME da	S *	--IRRIGATION-- RATE in/yr	TIME mo/yr	YIELD kg/m2	PROD-UCTION kg/yr	--CONSUMPTION-- HOLDUP da	RATE kg/yr
F	LEAF V	0.00	0	0.0	0.0	0.0	0.0E+00	0.0	0.0
F	ROOT V	0.00	0	0.0	0.0	0.0	0.0E+00	0.0	0.0
F	FRUIT	0.00	0	0.0	0.0	0.0	0.0E+00	0.0	0.0
F	GRAIN	0.00	0	0.0	0.0	0.0	0.0E+00	0.0	0.0

```
      ====ANIMAL PRODUCTION CONSUMPTION====================SECTION 10====
```

USE ? T/F	FOOD TYPE	---HUMAN---- CONSUMPTION RATE kg/yr	HOLDUP da	TOTAL PROD-UCTION kg/yr	DRINK WATER CONTAM FRACT.	----------STORED FEED---------- DIET FRAC-TION	GROW TIME da	-IRRIGATION-- S *	RATE in/yr	TIME mo/yr	YIELD kg/m3	STOR-AGE da
F	BEEF	0.0	0.0	0.00	0.00	0.00	0.0	0	0.0	0.00	0.00	0.0
F	POULTR	0.0	0.0	0.00	0.00	0.00	0.0	0	0.0	0.00	0.00	0.0
F	MILK	0.0	0.0	0.00	0.00	0.00	0.0	0	0.0	0.00	0.00	0.0
F	EGG	0.0	0.0	0.00	0.00	0.00	0.0	0	0.0	0.00	0.00	0.0
						----------FRESH FORAGE----------						
	BEEF					0.00	0.0	0	0.0	0.00	0.00	0.0
	MILK					0.00	0.0	0	0.0	0.00	0.00	0.0

##

GENII Input File
Maximum Onsite Receptor Ground Release - Inhalation & Submersion

```
########################## Program GENII Input File ############  8 Jul 88 ####
Title: Onsite, Inh & Sub, Acute, Ground Release - B Plant HEPA Filter
       \SAMPL\G-AIR.AC                          Created on 01-22-1990 at 07:30
OPTIONS========================= Default ====================================
F    Near-field scenario?       (Far-field)    NEAR-FIELD: narrowly-focused
F    Population dose?          (Individual)                release, single site
T    Acute release?              (Chronic)     FAR-FIELD:  wide-scale release,
     Maximum Individual data set used                      multiple sites
                                 Complete                                  Complete
TRANSPORT OPTIONS============ Section   EXPOSURE PATHWAY OPTIONS===== Section
T  Air Transport                  1     T  Finite plume, external        5
F  Surface Water Transport        2     F  Infinite plume, external      5
F  Biotic Transport (near-field)  3,4   F  Ground, external              5
F  Waste Form Degradation (near)  3,4   F  Recreation, external          5
                                        T  Inhalation uptake             5,6
REPORT OPTIONS======================    F  Drinking water ingestion      7,8
T  Report AEDE only                     F  Aquatic foods ingestion       7,8
F  Report by radionuclide               F  Terrestrial foods ingestion   7,9
F  Report by exposure pathway           F  Animal product ingestion      7,10
F  Debug report on screen               F  Inadvertent soil ingestion

INVENTORY ##########################################################################

 4   Inventory input activity units: (1-pCi  2-uCi  3-mCi  4-Ci  5-Bq)
 0   Surface soil source units (1- m2  2- m3  3- kg)
     Equilibrium question goes here

     --------|----Release Terms------|----------Basic Concentrations---------|
     Use when|  transport selected   |  near-field scenario, optionally      |
     --------|-----------------------|---------------------------------------|
     Release |        Surface Buried |        Surface Deep    Ground  Surface |
     Radio-  |Air     Water   Waste  |Air     Soil    Soil    Water   Water  |
     nuclide |/yr     /yr     /m3    |/m3     /unit   /m3     /L      /L     |
     --------|------- ------- -------|------- ------- ------- ------- -------|
     CS137   1.0

     --------|----Derived Concentrations-----|
     Use when|   measured values are known   |
     --------|-------------------------------|
     Release |Terres. Animal  Drink   Aquatic|
     Radio-  |Plant   Product Water   Food   |
     nuclide |/kg     /kg     /L      /kg    |
     --------|------- ------- ------- -------|

TIME ###################################################################################

1    Intake ends after (yr)
50   Dose calc. ends after (yr)
1    Release ends after (yr)
0    No. of years of air deposition prior to the intake period
```

```
0    No. of years of irrigation water deposition prior to the intake period

FAR-FIELD SCENARIOS (IF POPULATION DOSE) ######################################

0          Definition option: 1-Use population grid in file POP.IN
0                             2-Use total entered on this line

NEAR-FIELD SCENARIOS ##########################################################

           Prior to the beginning of the intake period: (yr)
0            When was the inventory disposed?  (Package degradation starts)
0            When was LOIC?  (Biotic transport starts)
0          Fraction of roots in upper soil (top 15 cm)
0          Fraction of roots in deep soil
0          Manual redistribution: deep soil/surface soil dilution factor
0          Source area for external dose modification factor (m2)
TRANSPORT ####################################################################
           ====AIR TRANSPORT=====================================SECTION 1=====
                   0-Calculate PM              |0        Release type (0-3)
3          Option: 1-Use chi/Q or PM value     |F        Stack release (T/F)
                   2-Select MI dist & dir      |0        Stack height (m)
                   3-Specify MI dist & dir     |0        Stack flow (m3/sec)
0          Chi/Q or PM value                   |0        Stack radius (m)
6          MI sector index (1=S)               |0        Effluent temp. (C)
100.       MI distance from release point (m)  |0        Building x-section (m2)
T          Use jf data, (T/F) else chi/Q grid  |0        Building height (m)

           ====SURFACE WATER TRANSPORT==========================SECTION 2=====
0          Mixing ratio model: 0-use value, 1-river, 2-lake
0          Mixing ratio, dimensionless
0          Average river flow rate for: MIXFLG=0 (m3/s), MIXFLG=1,2 (m/s),
0          Transit time to irrigation withdrawl location (hr)
           If mixing ratio model > 0:
0            Rate of effluent discharge to receiving water body (m3/s)
0            Longshore distance from release point to usage location (m)
0            Offshore distance to the water intake (m)
0            Average water depth in surface water body (m)
0            Average river width (m), MIXFLG=1 only
0            Depth of effluent discharge point to surface water (m), lake only

           ====WASTE FORM AVAILABILITY==========================SECTION 3=====
0          Waste form/package half life, (yr)
0          Waste thickness, (m)
0          Depth of soil overburden, m

           ====BIOTIC TRANSPORT OF BURIED SOURCE================SECTION 4=====
T          Consider during inventory decay/buildup period (T/F)?
T          Consider during intake period (T/F)?    | 1-Arid non agricultural
0          Pre-Intake site condition.............  | 2-Humid non agricultural
                                                   | 3-Agricultural

EXPOSURE #####################################################################
```

```
          ====EXTERNAL EXPOSURE================================SECTION 5=====
          Exposure time:                  |  Residential irrigation:
0           Plume (hr)                    | T        Consider: (T/F)
0           Soil contamination (hr)       | 0        Source: 1-ground water
0           Swimming (hr)                 |                  2-surface water
0           Boating (hr)                  | 0        Application rate (in/yr)
0           Shoreline activities (hr)     | 0        Duration (mo/yr)
0         Shoreline type: (1-river, 2-lake, 3-ocean, 4-tidal basin)
0         Transit time for release to reach aquatic recreation (hr)
1.0       Average fraction of time submersed in acute cloud (hr/person hr)

          ====INHALATION=======================================SECTION 6=====
8766.0    Hours of exposure to contamination per year
0         0-No resus-  1-Use Mass Loading          2-Use Anspaugh model
0           pension      Mass loading factor (g/m3)   Top soil available (cm)

          ====INGESTION POPULATION=============================SECTION 7=====
0         Atmospheric production definition (select option):
0           0-Use food-weighted chi/Q, (food-sec/m3), enter value on this line
            1-Use population-weighted chi/Q
            2-Use uniform production
            3-Use chi/Q and production grids (PRODUCTION will be overridden)
0         Population ingesting aquatic foods, 0 defaults to total (person)
0         Population ingesting drinking water, 0 defaults to total (person)
F         Consider dose from food exported out of region (default=F)

          Note below: S* or Source: 0-none, 1-ground water, 2-surface water
                                    3-Derived concentration entered above
          ==== AQUATIC FOODS / DRINKING WATER INGESTION=========SECTION 8====

F         Salt water? (default is fresh)
```

USE ? T/F	FOOD TYPE	TRAN-SIT hr	PROD-UCTION kg/yr	-CONSUMPTION- HOLDUP da	RATE kg/yr	DRINKING WATER	
F	FISH	0.00	0.0E+00	0.00	0.0	0	Source (see above)
F	MOLLUS	0.00	0.0E+00	0.00	0.0	T	Treatment? T/F
F	CRUSTA	0.00	0.0E+00	0.00	0.0	0	Holdup/transit(da)
F	PLANTS	0.00	0.0E+00	0.00	0.0	0	Consumption (L/yr)

```
          ====TERRESTRIAL FOOD INGESTION=======================SECTION 9=====
```

USE ? T/F	FOOD TYPE	GROW TIME da	S *	--IRRIGATION-- RATE in/yr	TIME mo/yr	YIELD kg/m2	PROD-UCTION kg/yr	--CONSUMPTION-- HOLDUP da	RATE kg/yr
F	LEAF V	0.00	0	0.0	0.0	0.0	0.0E+00	0.0	0.0
F	ROOT V	0.00	0	0.0	0.0	0.0	0.0E+00	0.0	0.0
F	FRUIT	0.00	0	0.0	0.0	0.0	0.0E+00	0.0	0.0
F	GRAIN	0.00	0	0.0	0.0	0.0	0.0E+00	0.0	0.0

```
          ====ANIMAL PRODUCTION CONSUMPTION====================SECTION 10====
```

USE ? T/F	FOOD TYPE	---HUMAN---- CONSUMPTION RATE kg/yr	HOLDUP da	TOTAL PROD-UCTION kg/yr	DRINK WATER CONTAM FRACT.	----------STORED FEED---------- DIET FRAC-TION	GROW TIME da	-IRRIGATION-- S *	RATE in/yr	TIME mo/yr	YIELD kg/m3	STOR-AGE da
F	BEEF	0.0	0.0	0.00	0.00	0.00	0.0	0	0.0	0.00	0.00	0.0
F	POULTR	0.0	0.0	0.00	0.00	0.00	0.0	0	0.0	0.00	0.00	0.0
F	MILK	0.0	0.0	0.00	0.00	0.00	0.0	0	0.0	0.00	0.00	0.C
F	EGG	0.0	0.0	0.00	0.00	0.00	0.0	0	0.0	0.00	0.00	0.0
						----------FRESH FORAGE----------						
	BEEF					0.00	0.0	0	0.0	0.00	0.00	0.0
	MILK					0.00	0.0	0	0.0	0.00	0.00	0.0

##

GENII Input File
Maximum Onsite Receptor Stack Release - Inhalation & Submersion

```
########################## Program GENII Input File ############  8 Jul 88 ####
Title: Onsite, Inh & Sub, Acute, 200 ft Release - B Plant HEPA Filter
       \SAMPL\S-AIR.AC                              Created on 01-22-1990 at 07:30
OPTIONS======================== Default ====================================
F    Near-field scenario?       (Far-field)    NEAR-FIELD: narrowly-focused
F    Population dose?          (Individual)                release, single site
T    Acute release?             (Chronic)     FAR-FIELD:  wide-scale release,
     Maximum Individual data set used                      multiple sites
                                Complete                                   Complete
TRANSPORT OPTIONS============ Section   EXPOSURE PATHWAY OPTIONS===== Section
T  Air Transport                  1     T  Finite plume, external        5
F  Surface Water Transport        2     F  Infinite plume, external      5
F  Biotic Transport (near-field)  3,4   F  Ground, external              5
F  Waste Form Degradation (near)  3,4   F  Recreation, external          5
                                        T  Inhalation uptake             5,6
REPORT OPTIONS======================    F  Drinking water ingestion      7,8
T  Report AEDE only                     F  Aquatic foods ingestion       7,8
F  Report by radionuclide               F  Terrestrial foods ingestion   7,9
F  Report by exposure pathway           F  Animal product ingestion      7,10
F  Debug report on screen               F  Inadvertent soil ingestion

INVENTORY ##########################################################################

 4   Inventory input activity units: (1-pCi  2-uCi  3-mCi  4-Ci  5-Bq)
 0   Surface soil source units (1- m2  2- m3  3- kg)
     Equilibrium question goes here

     --------|----Release Terms------|----------Basic Concentrations---------|
     Use when|  transport selected   |  near-field scenario, optionally      |
     --------|-----------------------|---------------------------------------|
     Release |        Surface Buried |        Surface Deep    Ground  Surface |
     Radio-  |Air     Water   Waste  |Air     Soil    Soil    Water   Water  |
     nuclide |/yr     /yr     /m3    |/m3     /unit   /m3     /L      /L     |
     --------|------- ------- -------|------- ------- ------- ------- -------|
     CS137   |1.0

     --------|----Derived Concentrations-----|
     Use when|   measured values are known   |
     --------|-------------------------------|
     Release |Terres. Animal  Drink   Aquatic|
     Radio-  |Plant   Product Water   Food   |
     nuclide |/kg     /kg     /L      /kg    |
     --------|------- ------- ------- -------|

TIME ###############################################################################

 1   Intake ends after (yr)
 50  Dose calc. ends after (yr)
 1   Release ends after (yr)
 0   No. of years of air deposition prior to the intake period
```

```
0    No. of years of irrigation water deposition prior to the intake period

FAR-FIELD SCENARIOS (IF POPULATION DOSE) ######################################

0          Definition option: 1-Use population grid in file POP.IN
0                             2-Use total entered on this line

NEAR-FIELD SCENARIOS ##########################################################

           Prior to the beginning of the intake period: (yr)
0            When was the inventory disposed?  (Package degradation starts)
0            When was LOIC?  (Biotic transport starts)
0          Fraction of roots in upper soil (top 15 cm)
0          Fraction of roots in deep soil
0          Manual redistribution: deep soil/surface soil dilution factor
0          Source area for external dose modification factor (m2)
TRANSPORT ####################################################################
           ====AIR TRANSPORT=====================================SECTION 1=====
                   0-Calculate PM              |1        Release type (0-3)
3          Option: 1-Use chi/Q or PM value     |T        Stack release (T/F)
                   2-Select MI dist & dir      |61.0     Stack height (m)
                   3-Specify MI dist & dir     |0        Stack flow (m3/sec)
0          Chi/Q or PM value                   |0        Stack radius (m)
3          MI sector index (1=S)               |0        Effluent temp. (C)
290.       MI distance from release point (m)  |0        Building x-section (m2)
T          Use jf data, (T/F) else chi/Q grid  |0        Building height (m)

           ====SURFACE WATER TRANSPORT==========================SECTION 2=====
0          Mixing ratio model: 0-use value, 1-river, 2-lake
0          Mixing ratio, dimensionless
0          Average river flow rate for: MIXFLG=0 (m3/s), MIXFLG=1,2 (m/s),
0          Transit time to irrigation withdrawl location (hr)
           If mixing ratio model > 0:
0            Rate of effluent discharge to receiving water body (m3/s)
0            Longshore distance from release point to usage location (m)
0            Offshore distance to the water intake (m)
0            Average water depth in surface water body (m)
0            Average river width (m), MIXFLG=1 only
0            Depth of effluent discharge point to surface water (m), lake only

           ====WASTE FORM AVAILABILITY==========================SECTION 3=====
0          Waste form/package half life, (yr)
0          Waste thickness, (m)
0          Depth of soil overburden, m

           ====BIOTIC TRANSPORT OF BURIED SOURCE===============SECTION 4=====
T          Consider during inventory decay/buildup period (T/F)?
T          Consider during intake period (T/F)?    | 1-Arid non agricultural
0          Pre-Intake site condition.............  | 2-Humid non agricultural
                                                   | 3-Agricultural

EXPOSURE #####################################################################
```

```
      ====EXTERNAL EXPOSURE================================SECTION 5=====
      Exposure time:                    |  Residential irrigation:
0       Plume (hr)                      | T        Consider: (T/F)
0       Soil contamination (hr)         | 0        Source: 1-ground water
0       Swimming (hr)                   |                  2-surface water
0       Boating (hr)                    | 0        Application rate (in/yr)
0       Shoreline activities (hr)       | 0        Duration (mo/yr)
0     Shoreline type: (1-river, 2-lake, 3-ocean, 4-tidal basin)
0     Transit time for release to reach aquatic recreation (hr)
1.0   Average fraction of time submersed in acute cloud (hr/person hr)

      ====INHALATION=======================================SECTION 6=====
8766.0 Hours of exposure to contamination per year
0     0-No resus-  1-Use Mass Loading          2-Use Anspaugh model
0       pension      Mass loading factor (g/m3)   Top soil available (cm)

      ====INGESTION POPULATION=============================SECTION 7=====
0     Atmospheric production definition (select option):
0       0-Use food-weighted chi/Q, (food-sec/m3), enter value on this line
        1-Use population-weighted chi/Q
        2-Use uniform production
        3-Use chi/Q and production grids (PRODUCTION will be overridden)
0     Population ingesting aquatic foods, 0 defaults to total (person)
0     Population ingesting drinking water, 0 defaults to total (person)
F     Consider dose from food exported out of region (default=F)

      Note below: S* or Source: 0-none, 1-ground water, 2-surface water
                                3-Derived concentration entered above
      ==== AQUATIC FOODS / DRINKING WATER INGESTION=========SECTION 8====

F     Salt water? (default is fresh)

      USE        TRAN-  PROD-    -CONSUMPTION-  |
      ?   FOOD   SIT    UCTION   HOLDUP   RATE  |
      T/F TYPE   hr     kg/yr    da       kg/yr |      DRINKING WATER
      --- ------ ----- ------- ------ ----- |------------------------
      F   FISH    0.00  0.0E+00   0.00    0.0 | 0      Source (see above)
      F   MOLLUS  0.00  0.0E+00   0.00    0.0 | T      Treatment? T/F
      F   CRUSTA  0.00  0.0E+00   0.00    0.0 | 0      Holdup/transit(da)
      F   PLANTS  0.00  0.0E+00   0.00    0.0 | 0      Consumption (L/yr)

      ====TERRESTRIAL FOOD INGESTION=======================SECTION 9=====

      USE        GROW   --IRRIGATION--          PROD-    --CONSUMPTION--
      ?   FOOD   TIME   S RATE   TIME    YIELD   UCTION   HOLDUP   RATE
      T/F TYPE   da     * in/yr  mo/yr   kg/m2   kg/yr    da       kg/yr
      --- ------ ----- - ----- ----- ----- ------- ------ ------
      F   LEAF V 0.00  0   0.0   0.0     0.0   0.0E+00    0.0      0.0
      F   ROOT V 0.00  0   0.0   0.0     0.0   0.0E+00    0.0      0.0
      F   FRUIT  0.00  0   0.0   0.0     0.0   0.0E+00    0.0      0.0
      F   GRAIN  0.00  0   0.0   0.0     0.0   0.0E+00    0.0      0.0

      ====ANIMAL PRODUCTION CONSUMPTION====================SECTION 10====
```

USE ? T/F	FOOD TYPE	---HUMAN---- CONSUMPTION RATE kg/yr	HOLDUP da	TOTAL PROD-UCTION kg/yr	DRINK WATER CONTAM FRACT.	----------STORED FEED---------- DIET FRAC-TION	GROW TIME da	-IRRIGATION-- S *	RATE in/yr	TIME mo/yr	YIELD kg/m3	STOR-AGE da
F	BEEF	0.0	0.0	0.00	0.00	0.00	0.0	0	0.0	0.00	0.00	0.0
F	POULTR	0.0	0.0	0.00	0.00	0.00	0.0	0	0.0	0.00	0.00	0.0
F	MILK	0.0	0.0	0.00	0.00	0.00	0.0	0	0.0	0.00	0.00	0.0
F	EGG	0.0	0.0	0.00	0.00	0.00	0.0	0	0.0	0.00	0.00	0.0
						----------FRESH FORAGE----------						
	BEEF					0.00	0.0	0	0.0	0.00	0.00	0.0
	MILK					0.00	0.0	0	0.0	0.00	0.00	0.0

##

GENII Input File
Maximum Offsite Receptor Ground Release - Inhalation & Submersion

```
######################### Program GENII Input File ############  8 Jul 88 ####
Title: Offsite, Inh & Sub, Acute, Ground Release from B-Plant HEPA Filter
       \SAMPL\G-AIR.AC                                Created on 01-22-1990 at 07:30
OPTIONS======================== Default ====================================
F    Near-field scenario?       (Far-field)    NEAR-FIELD: narrowly-focused
F    Population dose?          (Individual)                release, single site
T    Acute release?              (Chronic)     FAR-FIELD:  wide-scale release,
     Maximum Individual data set used                      multiple sites
                                Complete                                   Complete
TRANSPORT OPTIONS============ Section   EXPOSURE PATHWAY OPTIONS===== Section
T  Air Transport                  1     F  Finite plume, external        5
F  Surface Water Transport        2     T  Infinite plume, external      5
F  Biotic Transport (near-field)  3,4   F  Ground, external              5
F  Waste Form Degradation (near)  3,4   F  Recreation, external          5
                                        T  Inhalation uptake             5,6
REPORT OPTIONS======================    F  Drinking water ingestion      7,8
T  Report AEDE only                     F  Aquatic foods ingestion       7,8
F  Report by radionuclide               F  Terrestrial foods ingestion   7,9
F  Report by exposure pathway           F  Animal product ingestion      7,10
F  Debug report on screen               F  Inadvertent soil ingestion

INVENTORY ##########################################################################

 4   Inventory input activity units: (1-pCi  2-uCi  3-mCi  4-Ci  5-Bq)
 0   Surface soil source units (1- m2  2- m3  3- kg)
     Equilibrium question goes here

     --------|----Release Terms------|----------Basic Concentrations---------|
     Use when|  transport selected   |  near-field scenario, optionally      |
     --------|-----------------------|---------------------------------------|
     Release |        Surface Buried |        Surface Deep    Ground  Surface|
     Radio-  |Air     Water   Waste  |Air     Soil    Soil    Water   Water  |
     nuclide |/yr     /yr     /m3    |/m3     /unit   /m3     /L      /L     |
     --------|------- ------- -------|------- ------- ------- ------- -------|
     CS137   |1.0                    |                                       |

     --------|----Derived Concentrations-----|
     Use when|   measured values are known   |
     --------|-------------------------------|
     Release |Terres. Animal  Drink   Aquatic|
     Radio-  |Plant   Product Water   Food   |
     nuclide |/kg     /kg     /L      /kg    |
     --------|------- ------- ------- -------|

TIME ###############################################################################

1    Intake ends after (yr)
50   Dose calc. ends after (yr)
1    Release ends after (yr)
0    No. of years of air deposition prior to the intake period
```

```
0     No. of years of irrigation water deposition prior to the intake period

FAR-FIELD SCENARIOS (IF POPULATION DOSE) ####################################

0          Definition option: 1-Use population grid in file POP.IN
0                             2-Use total entered on this line

NEAR-FIELD SCENARIOS ########################################################

           Prior to the beginning of the intake period: (yr)
0            When was the inventory disposed?  (Package degradation starts)
0            When was LOIC?  (Biotic transport starts)
0          Fraction of roots in upper soil (top 15 cm)
0          Fraction of roots in deep soil
0          Manual redistribution: deep soil/surface soil dilution factor
0          Source area for external dose modification factor (m2)
TRANSPORT ###################################################################
           ====AIR TRANSPORT=====================================SECTION 1=====
                  0-Calculate PM                |0        Release type (0-3)
3          Option: 1-Use chi/Q or PM value      |F        Stack release (T/F)
                  2-Select MI dist & dir        |0        Stack height (m)
                  3-Specify MI dist & dir       |0        Stack flow (m3/sec)
0          Chi/Q or PM value                    |0        Stack radius (m)
6          MI sector index (1=S)                |0        Effluent temp. (C)
20300.     MI distance from release point (m)   |0        Building x-section (m2)
T          Use jf data, (T/F) else chi/Q grid   |0        Building height (m)

           ====SURFACE WATER TRANSPORT==========================SECTION 2=====
0          Mixing ratio model: 0-use value, 1-river, 2-lake
0          Mixing ratio, dimensionless
0          Average river flow rate for: MIXFLG=0 (m3/s), MIXFLG=1,2 (m/s),
0          Transit time to irrigation withdrawl location (hr)
           If mixing ratio model > 0:
0            Rate of effluent discharge to receiving water body (m3/s)
0            Longshore distance from release point to usage location (m)
0            Offshore distance to the water intake (m)
0            Average water depth in surface water body (m)
0            Average river width (m), MIXFLG=1 only
0            Depth of effluent discharge point to surface water (m), lake only

           ====WASTE FORM AVAILABILITY==========================SECTION 3=====
0          Waste form/package half life, (yr)
0          Waste thickness, (m)
0          Depth of soil overburden, m

           ====BIOTIC TRANSPORT OF BURIED SOURCE================SECTION 4=====
T          Consider during inventory decay/buildup period (T/F)?
T          Consider during intake period (T/F)?    | 1-Arid non agricultural
0          Pre-Intake site condition.............  | 2-Humid non agricultural
                                                   | 3-Agricultural

EXPOSURE ####################################################################
```

```
          ====EXTERNAL EXPOSURE================================SECTION 5=====
          Exposure time:                  |  Residential irrigation:
0           Plume (hr)                    | T        Consider: (T/F)
0           Soil contamination (hr)       | 0        Source: 1-ground water
0           Swimming (hr)                 |                  2-surface water
0           Boating (hr)                  | 0        Application rate (in/yr)
0           Shoreline activities (hr)     | 0        Duration (mo/yr)
0         Shoreline type: (1-river, 2-lake, 3-ocean, 4-tidal basin)
0         Transit time for release to reach aquatic recreation (hr)
1.0       Average fraction of time submersed in acute cloud (hr/person hr)

          ====INHALATION=======================================SECTION 6=====
8766.0    Hours of exposure to contamination per year
0         0-No resus-  1-Use Mass Loading          2-Use Anspaugh model
0           pension      Mass loading factor (g/m3)   Top soil available (cm)

          ====INGESTION POPULATION=============================SECTION 7=====
0         Atmospheric production definition (select option):
0           0-Use food-weighted chi/Q, (food-sec/m3), enter value on this line
            1-Use population-weighted chi/Q
            2-Use uniform production
            3-Use chi/Q and production grids (PRODUCTION will be overridden)
0         Population ingesting aquatic foods, 0 defaults to total (person)
0         Population ingesting drinking water, 0 defaults to total (person)
F         Consider dose from food exported out of region (default=F)

          Note below: S* or Source: 0-none, 1-ground water, 2-surface water
                                    3-Derived concentration entered above
          ==== AQUATIC FOODS / DRINKING WATER INGESTION=========SECTION 8====

F         Salt water? (default is fresh)

          USE        TRAN-  PROD-    -CONSUMPTION-
          ?   FOOD   SIT    UCTION   HOLDUP   RATE
          T/F TYPE   hr     kg/yr    da       kg/yr   |      DRINKING WATER
          --- ------ ----- ------- ------ ----- |-------------------------
          F   FISH   0.00  0.0E+00   0.00    0.0 | 0      Source (see above)
          F   MOLLUS 0.00  0.0E+00   0.00    0.0 | T      Treatment? T/F
          F   CRUSTA 0.00  0.0E+00   0.00    0.0 | 0      Holdup/transit(da)
          F   PLANTS 0.00  0.0E+00   0.00    0.0 | 0      Consumption (L/yr)

          ====TERRESTRIAL FOOD INGESTION=======================SECTION 9=====

          USE        GROW   --IRRIGATION--          PROD-    --CONSUMPTION--
          ?   FOOD   TIME   S RATE   TIME    YIELD   UCTION   HOLDUP   RATE
          T/F TYPE   da     * in/yr  mo/yr   kg/m2   kg/yr    da       kg/yr
          --- ------ ----- - ----- ------ ----- ------- ------ ------
          F   LEAF V 0.00  0   0.0   0.0     0.0   0.0E+00    0.0      0.0
          F   ROOT V 0.00  0   0.0   0.0     0.0   0.0E+00    0.0      0.0
          F   FRUIT  0.00  0   0.0   0.0     0.0   0.0E+00    0.0      0.0
          F   GRAIN  0.00  0   0.0   0.0     0.0   0.0E+00    0.0      0.0

          ====ANIMAL PRODUCTION CONSUMPTION====================SECTION 10====
```

USE ? T/F	FOOD TYPE	---HUMAN---- CONSUMPTION RATE kg/yr	HOLDUP da	TOTAL PROD-UCTION kg/yr	DRINK WATER CONTAM FRACT.	----------STORED FEED---------- DIET FRAC-TION	GROW TIME da	-IRRIGATION-- S *	RATE in/yr	TIME mo/yr	YIELD kg/m3	STOR-AGE da
F	BEEF	0.0	0.0	0.00	0.00	0.00	0.0	0	0.0	0.00	0.00	0.0
F	POULTR	0.0	0.0	0.00	0.00	0.00	0.0	0	0.0	0.00	0.00	0.0
F	MILK	0.0	0.0	0.00	0.00	0.00	0.0	0	0.0	0.00	0.00	0.0
F	EGG	0.0	0.0	0.00	0.00	0.00	0.0	0	0.0	0.00	0.00	0.0
						----------FRESH FORAGE----------						
	BEEF					0.00	0.0	0	0.0	0.00	0.00	0.0
	MILK					0.00	0.0	0	0.0	0.00	0.00	0.0

##

GENII Input File
Maximum Offsite Receptor Stack Release - Inhalation & Submersion

```
######################### Program GENII Input File ############  8 Jul 88 ####
Title: Offsite, Inh & Sub, Acute, 200 ft Stack, B-Plant HEPA Filter Release
       \SAMPL\S-AIR.AC                              Created on 01-22-1990 at 07:30
OPTIONS========================= Default ====================================
F    Near-field scenario?       (Far-field)    NEAR-FIELD: narrowly-focused
F    Population dose?          (Individual)                release, single site
T    Acute release?              (Chronic)     FAR-FIELD:  wide-scale release,
     Maximum Individual data set used                      multiple sites
                                Complete                                   Complete
TRANSPORT OPTIONS============ Section   EXPOSURE PATHWAY OPTIONS===== Section
T  Air Transport                  1     F  Finite plume, external        5
F  Surface Water Transport        2     T  Infinite plume, external      5
F  Biotic Transport (near-field)  3,4   F  Ground, external              5
F  Waste Form Degradation (near)  3,4   F  Recreation, external          5
                                        T  Inhalation uptake             5,6
REPORT OPTIONS======================    F  Drinking water ingestion      7,8
T  Report AEDE only                     F  Aquatic foods ingestion       7,8
F  Report by radionuclide               F  Terrestrial foods ingestion   7,9
F  Report by exposure pathway           F  Animal product ingestion      7,10
F  Debug report on screen               F  Inadvertent soil ingestion

INVENTORY ##########################################################################

 4   Inventory input activity units: (1-pCi  2-uCi  3-mCi  4-Ci  5-Bq)
 0   Surface soil source units (1- m2  2- m3  3- kg)
     Equilibrium question goes here

     --------|----Release Terms------|----------Basic Concentrations---------|
     Use when|  transport selected   |  near-field scenario, optionally      |
     --------|-----------------------|---------------------------------------|
     Release |        Surface Buried |        Surface Deep    Ground  Surface|
     Radio-  |Air     Water   Waste  |Air     Soil    Soil    Water   Water  |
     nuclide |/yr     /yr     /m3    |/m3     /unit   /m3     /L      /L     |
     --------|------- ------- -------|------- ------- ------- ------- -------|
     CS137   1.0

     --------|----Derived Concentrations-----|
     Use when|   measured values are known   |
     --------|-------------------------------|
     Release |Terres. Animal  Drink   Aquatic|
     Radio-  |Plant   Product Water   Food   |
     nuclide |/kg     /kg     /L      /kg    |
     --------|------- ------- ------- -------|

TIME ###############################################################################

1    Intake ends after (yr)
50   Dose calc. ends after (yr)
1    Release ends after (yr)
0    No. of years of air deposition prior to the intake period
```

```
0     No. of years of irrigation water deposition prior to the intake period

FAR-FIELD SCENARIOS (IF POPULATION DOSE) ######################################

0          Definition option: 1-Use population grid in file POP.IN
0                             2-Use total entered on this line

NEAR-FIELD SCENARIOS ##########################################################

           Prior to the beginning of the intake period: (yr)
0            When was the inventory disposed?  (Package degradation starts)
0            When was LOIC?  (Biotic transport starts)
0          Fraction of roots in upper soil (top 15 cm)
0          Fraction of roots in deep soil
0          Manual redistribution: deep soil/surface soil dilution factor
0          Source area for external dose modification factor (m2)
TRANSPORT #####################################################################
           ====AIR TRANSPORT=====================================SECTION 1=====
                   0-Calculate PM                |1        Release type (0-3)
3          Option: 1-Use chi/Q or PM value       |T        Stack release (T/F)
                   2-Select MI dist & dir        |61.0     Stack height (m)
                   3-Specify MI dist & dir       |0        Stack flow (m3/sec)
0          Chi/Q or PM value                     |0        Stack radius (m)
5          MI sector index (1=S)                 |0        Effluent temp. (C)
20000.     MI distance from release point (m)    |0        Building x-section (m2)
T          Use jf data, (T/F) else chi/Q grid    |0        Building height (m)

           ====SURFACE WATER TRANSPORT==========================SECTION 2=====
0          Mixing ratio model: 0-use value, 1-river, 2-lake
0          Mixing ratio, dimensionless
0          Average river flow rate for: MIXFLG=0 (m3/s), MIXFLG=1,2 (m/s),
0          Transit time to irrigation withdrawl location (hr)
           If mixing ratio model > 0:
0            Rate of effluent discharge to receiving water body (m3/s)
0            Longshore distance from release point to usage location (m)
0            Offshore distance to the water intake (m)
0            Average water depth in surface water body (m)
0            Average river width (m), MIXFLG=1 only
0            Depth of effluent discharge point to surface water (m), lake only

           ====WASTE FORM AVAILABILITY==========================SECTION 3=====
0          Waste form/package half life, (yr)
0          Waste thickness, (m)
0          Depth of soil overburden, m

           ====BIOTIC TRANSPORT OF BURIED SOURCE================SECTION 4=====
T          Consider during inventory decay/buildup period (T/F)?
T          Consider during intake period (T/F)?   | 1-Arid non agricultural
0          Pre-Intake site condition.............  | 2-Humid non agricultural
                                                   | 3-Agricultural

EXPOSURE ######################################################################
```

```
====EXTERNAL EXPOSURE================================SECTION 5=====
Exposure time:                    |  Residential irrigation:
0     Plume (hr)                  | T        Consider: (T/F)
0     Soil contamination (hr)     | 0        Source: 1-ground water
0     Swimming (hr)               |                  2-surface water
0     Boating (hr)                | 0        Application rate (in/yr)
0     Shoreline activities (hr)   | 0        Duration (mo/yr)
0     Shoreline type: (1-river, 2-lake, 3-ocean, 4-tidal basin)
0     Transit time for release to reach aquatic recreation (hr)
1.0   Average fraction of time submersed in acute cloud (hr/person hr)

====INHALATION=======================================SECTION 6=====
8766.0  Hours of exposure to contamination per year
0       0-No resus-  1-Use Mass Loading          2-Use Anspaugh model
0         pension      Mass loading factor (g/m3)   Top soil available (cm)

====INGESTION POPULATION=============================SECTION 7=====
0       Atmospheric production definition (select option):
0         0-Use food-weighted chi/Q, (food-sec/m3), enter value on this line
          1-Use population-weighted chi/Q
          2-Use uniform production
          3-Use chi/Q and production grids (PRODUCTION will be overridden)
0       Population ingesting aquatic foods, 0 defaults to total (person)
0       Population ingesting drinking water, 0 defaults to total (person)
F       Consider dose from food exported out of region (default=F)

        Note below: S* or Source: 0-none, 1-ground water, 2-surface water
                                  3-Derived concentration entered above
        ==== AQUATIC FOODS / DRINKING WATER INGESTION=========SECTION 8====

F       Salt water? (default is fresh)

        USE        TRAN-  PROD-    -CONSUMPTION-  |
        ?   FOOD   SIT    UCTION   HOLDUP   RATE  |
        T/F TYPE   hr     kg/yr    da       kg/yr |      DRINKING WATER
        --- ------ -----  -------  ------   ----- |-------------------------
        F   FISH    0.00  0.0E+00   0.00     0.0  | 0      Source (see above)
        F   MOLLUS  0.00  0.0E+00   0.00     0.0  | T      Treatment? T/F
        F   CRUSTA  0.00  0.0E+00   0.00     0.0  | 0      Holdup/transit(da)
        F   PLANTS  0.00  0.0E+00   0.00     0.0  | 0      Consumption (L/yr)

        ====TERRESTRIAL FOOD INGESTION=======================SECTION 9=====

        USE        GROW   --IRRIGATION--          PROD-    --CONSUMPTION--
        ?   FOOD   TIME   S RATE   TIME    YIELD  UCTION   HOLDUP   RATE
        T/F TYPE   da     * in/yr  mo/yr   kg/m2  kg/yr    da       kg/yr
        --- ------ -----  - -----  -----   -----  -------  ------   ------
        F   LEAF V 0.00   0   0.0    0.0     0.0  0.0E+00    0.0      0.0
        F   ROOT V 0.00   0   0.0    0.0     0.0  0.0E+00    0.0      0.0
        F   FRUIT  0.00   0   0.0    0.0     0.0  0.0E+00    0.0      0.0
        F   GRAIN  0.00   0   0.0    0.0     0.0  0.0E+00    0.0      0.0

        ====ANIMAL PRODUCTION CONSUMPTION====================SECTION 10====
```

USE ? T/F	FOOD TYPE	---HUMAN---- CONSUMPTION RATE kg/yr	HOLDUP da	TOTAL PROD-UCTION kg/yr	DRINK WATER CONTAM FRACT.	----------STORED FEED---------- DIET FRAC-TION	GROW TIME da	-IRRIGATION-- S *	RATE in/yr	TIME mo/yr	YIELD kg/m3	STOR-AGE da
F	BEEF	0.0	0.0	0.00	0.00	0.00	0.0	0	0.0	0.00	0.00	0.0
F	POULTR	0.0	0.0	0.00	0.00	0.00	0.0	0	0.0	0.00	0.00	0.0
F	MILK	0.0	0.0	0.00	0.00	0.00	0.0	0	0.0	0.00	0.00	0.0
F	EGG	0.0	0.0	0.00	0.00	0.00	0.0	0	0.0	0.00	0.00	0.0
						----------FRESH FORAGE----------						
	BEEF					0.00	0.0	0	0.0	0.00	0.00	0.0
	MILK					0.00	0.0	0	0.0	0.00	0.00	0.0

##

PEER REVIEW CHECKLIST

Document Reviewed: RADIOLOGICAL DOSE ANALYSIS FOR B-PLANT HEPA FILTER RELEASE SCENARIO

Author: Anthony V. Savino
Date: December 1992
Scope of Review: Entire Document

Yes	No	NA	
[ ]	[ ]	[X]	Previous reviews complete and cover analysis, up to scope of this review, with no gaps.
[X]	[ ]	[ ]	Problem completely defined.
[ ]	[ ]	[X]*	Accident scenarios developed in a clear and logical manner.
[X]	[ ]	[ ]	Necessary assumptions explicitly stated and supported.
[X]	[ ]	[ ]	Computer codes and data files documented.
[X]	[ ]	[ ]	Data used in calculations explicitly stated in document.
[X]	[ ]	[ ]	Data checked for consistency with original source information as applicable.
[X]	[ ]	[ ]	Mathematical derivations checked including dimensional consistency of results.
[X]	[ ]	[ ]	Models appropriate and used within range of validity or use outside range of established validity justified.
[X]	[ ]	[ ]	Hand calculations checked for errors. Spreadsheet results should be treated exactly the same as hand calculations.
[X]	[ ]	[ ]	Software input correct and consistent with document reviewed.
[X]	[ ]	[ ]	Software output consistent with input and with results reported in document reviewed.
[X]	[ ]	[ ]	Limits/criteria/guidelines applied to analysis results are appropriate and referenced. Limits/criteria/guidelines checked against references.
[ ]	[ ]	[X]	Safety margins consistent with good engineering practices.
[X]	[ ]	[ ]	Conclusions consistent with analytical results and applicable limits.
[X]	[ ]	[ ]	Results and conclusions address all points required in the problem statement.
[ ]	[ ]	[X]	Format consistent with appropriate NRC Regulatory Guide or other standards
[X]	[ ]	[ ]	Review calculations, comments, and/or notes are attached.
[X]	[ ]	[ ]	Document approved.

R. G. Brittain 12-17-92
Reviewer (Printed Name and Signature) Date

[ ] [ ] [ ] Analysis entered into analysis database

* Customer specified unit Release.

HEDOP REVIEW CHECKLIST
for
Radiological and Nonradiological Release Calculations

Document reviewed (include title or description of calculation, document number, author, and date, as applicable):

Memo, A.V. Savino to R.M. Marusich, "Radiological Dose Analysis for B-Plant HEPA Filter Release," December 1, 1992.

Submitted by: A.V. Savino Date Submitted: 12/18/92

Scope of Review: Entire document

YES	NO*	N/A		
[X]	[ ]	[ ]	1.	A detailed technical review and approval of the environmental transport and dose calculation portion of the analysis has been performed and documented.
[ ]	[X]	[ ]	2.	Detailed technical review(s) and approval(s) of scenario and release determinations have been performed and documented.
[X]	[ ]	[ ]	3.	HEDOP-approved code(s) were used.
[ ]	[X]	[ ]	4.	Receptor locations were selected according to HEDOP recommendations.
[X]	[ ]	[ ]	5.	All applicable environmental pathways and code options were included and are appropriate for the calculations.
[X]	[ ]	[ ]	6.	Hanford site data were used.
[X]	[ ]	[ ]	7.	Model adjustments external to the computer program were justified and performed correctly.
[X]	[ ]	[ ]	8.	The analysis is consistent with HEDOP recommendations.
[X]		[ ]	9.	Supporting notes, calculations, comments, comment resolutions, or other information is attached. (Use the "Page 1 of X" page numbering format and sign and date each added page.)
[X]	[ ]		10.	Approval is granted on behalf of the Hanford Environmental Dose Overview Panel.

* All "NO" responses must be explained and use of nonstandard methods justified.

Janet S. Davis Janet S. Davis 12/22/92
HEDOP-Approved Reviewer (Printed Name and Signature) Date

COMMENTS (add additional signed and dated pages if necessary):

2. The analysis was of a unit release, so there is no source term quantity to be reviewed and approved. However, there was no evidence of review of the radionuclides of concern or the duration of the release (which is crucial for application of plume meander correction factors).

4. There are currently no HEDOP recommendations on receptor locations.

JJD 12/22/92

5. As requested by the customer, ingestion doses were not evaluated.

6. Ground contamination levels were hand calculated with a standard ground contamination formula using GENII-generated X/Qs, and the plume meander correction factor was calculated in accordance with NRC Regulatory Guide 1.145.