9002964 0009644

Department of Energy
Richland Operations Office
P.O. Box 550
Richland, Washington 99352

90-PPB-023

JUN 29 1990

Mr. Paul T. Day
Hanford Project Manager
U.S. Environmental Protection Agency
Region 10
P.O. Box 550 Mail Stop A7-70
Richland, Washington 99352

Mr. Timothy L. Nord
Hanford Project Manager
State of Washington
Department of Ecology
Mail Stop PV-11
Olympia, Washington 98504-8711

JUL 1990
RECEIVED
EDMC

Dear Messrs. Day and Nord:

RESUBMITTAL OF REQUEST FOR FACILITIES TO BE MANAGED AS TREATMENT-BY GENERATORS MILESTONE M-23-01

Reference: Letter, Mr. Roger Stanley, Ecology, to Mr. Roger Freeberg, DOE-RL, "Treatment-By-Generator Petition," dated October 10, 1989.

The U.S. Department of Energy, Richland Operations Office (DOE-RL) and Westinghouse Hanford Company (WHC) request that treatment activities in the following interim status units be allowed under Treatment-By-Generator (TBG) status:

222-S Treatment Tank
Plutonium Uranium Extraction Plant Treatment Tanks
204-AR Waste Unloading Station

These requests were originally submitted to the U.S. Environmental Protection Agency (EPA) and Washington State Department of Ecology (Ecology) on June 30, 1989, to fulfill Hanford Federal Facility Agreement and Consent Order (Tri-Party Agreement) Milestone M-20-46. On October 10, 1989, Ecology denied the requests, citing inadequate information to meet the approval criteria. During subsequent discussion with Ecology, it was agreed that the TBG requests could be resubmitted, and a milestone was agreed to. The subject petitions for TBG have been revised and are again submitted for you approval. Submittal of this request fulfills Tri-Party Agreement Milestone M-23-01.

Please note that the T Plant Treatment-By-Generator (TBG) request is not included in this resubmittal. Analytical data to support designation of the waste stream has not been obtained at this time. Several T Plant waste samples have been drawn and will undergo analysis very soon. The analytical

testing results, when received, will be used to support the process knowledge designation and provide a complete designation of the waste stream. The TBG request will be submitted per Change Request M-23-90-4 dated 6/18/90.

The original request for TBG status also included the 241-Z Treatment Tank. During negotiation of Tri-Party Agreement Milestone M-23-01, it was agreed that the request for management of the 241-Z Treatment Tanks as a generator facility would be submitted six months after restart of both operating processes at the Plutonium Finishing Plant. Therefore the request for TBG for 241-Z is not included in this submittal.

In the reference letter, one discrepancy noted for each facility was that monthly or batch treatment volumes exceed small quantity generator criteria. The discussion originated in the T Plant rejection section and stated that "T.I.M. 86-3 clearly discusses the preferential granting of petitions for low volume wastes, e.g., small quantity generators (100-1000 kilogram/month or batch)." We believe that this interpretation does not coincide with the intent or wording of Technical Information Memorandum (T.I.M.) 86-3. After discussion of this issue with the author of T.I.M. 86-3, it was concluded that development of this memorandum was not aimed at disallowing larger quantity generators from receiving TBG status. The T.I.M. 86-3 states that "Subsequent communications with EPA regarding this preamble discussion confirm that EPA intends to allow onsite treatment by both small quantity generators and larger generators." This statement was added to clarify that TBG was not intended to apply only to small quantity generators, even though the cited preamble discussion was from a small quantity generator final rule in the Federal Register. Therefore, we believe that TBG clearly applies to large quantity generators.

Also in the reference letter, it was noted that the 204-AR Facility did not conduct waste treatment in a tank or a container, and therefore could not be considered for TBG status. While 204-AR is an in-line treatment system, it conducts treatment for generators which is equivalent to that conducted in generator tanks at other locations on site (i.e., the addition of sodium hydroxide and sodium nitrite). It is our desire to treat these systems consistently onsite, thus the comparison of 204-AR treatment system to dangerous waste tank requirements. Further, piping is normally included in the definition of a "tank system" as ancillary equipment. It was our expectation that 204-AR, which is currently described as "other treatment" in the Part A permit application, would ultimately be compared to tank standards due to functional similarities. We remain convinced that the 204-AR treatment process can, at Ecology's discretion, be considered a tank treatment system.

Questions concerning this request for TBG status on these four systems should be addressed to Mr. A. J. Knepp of DOE-RL on (509) 376-1471 or Ms. Lisa Garner, WHC, on (509) 376-5969.

Sincerely,

R. D. Izatt, Director
Environmental Restoration Division
Richland Operations Office

ERD:AJK

R. E. Lerch, Director
Environmental Division
Westinghouse Hanford Company

Attachments:
222-S Treatment Tanks
Plutonium Uranium Extraction
Plant Treatment Tanks
204-AR Waste Unloading Facility
Management of TSD Facilities as TBGs

cc w/o atts:
R. E. Lerch, WHC

MANAGEMENT OF TSD FACILITIES AS TREATMENT-BY-GENERATORS

Regulatory Agency Policy Regarding Treatment by Generator

On March 24, 1986, the Environmental Protection Agency (EPA) published amendments to the Federal Hazardous waste generator requirements. In the preamble discussion, EPA stated that:

> "Of course, no permitting would be required if a generator chooses to treat their hazardous waste in the generator's accumulation tanks or containers in conformance with the requirements of 262.34 and Subparts J or I of Part 265."

In response to EPA's determination, the Washington State Department of Ecology (Ecology) issued a Technical Information Memorandum, (T.I.M) No. 86-3, TREATMENT-BY-GENERATORS (TBG). This document states that "Ecology intends to allow treatment on a case-by-case basis."

Ecology specifically listed the following criteria to be considered before allowing a generator to treat their waste:

1) Inherent risk of the treatment process; low risk treatment processes including sedimentation, carbon adsorption, precipitation, phase separation, elementary neutralization, solidification, evaporation, etc., will be preferentially allowed.

2) The toxicity of the waste being treated; treatment of lower toxicity wastes will be preferentially allowed.

3) The risk to human health and the environment of a release of wastes, and the probability of such release.

4) The relative benefit to the environment; treatment processes that result in a substantial benefit to the environment will be preferentially allowed.

Using the criteria described above, the following attachments contain information to be used in allowing the U.S. Department of Energy-Richland Operations Office (DOE-RL) and Westinghouse Hanford Company (WHC) to manage the following interim status facilities as TBG:

222-S Treatment Tank
Plutonium Uranium Extraction Plant Treatment Tanks
204-AR Waste Unloading Station
T Plant Treatment Tanks

If the request for TBG status is granted, existing Part A permit applications will be withdrawn.

The attachments for each facility except 204-AR contain the following sections:

I. Background Information

- o Generator Waste Description
- o Waste Treatment Process Description.

II. Comparison with State Treatment By Generator Criteria

- o Inherent Risk of the Treatment Process
- o Waste Toxicity
- o Risk and Probability of Release
- o Relative Benefit to the Environment

III. Compliance with Generator Accumulation Requirements.

- o General Requirements
- o Requirements for Tank Systems

IV. Waste Analysis

- o Waste Characterization
- o Waste Designation
- o Waste Designation Summary and Conclusion

The 204-AR Facility receives multiple sources of waste which can not be designated through a single sampling effort. The attachment describes the types of wastes accepted at 204-AR.

The first section contains information on how the waste is generated and treated. The second section compares the treatment process information with the criteria contained in the T.I.M. and states how the criteria is met. The third section contains information on compliance with the generator accumulation requirements, both general and tank specific. Finally, a fourth section has been added to the resubmittal which contains additional information requested to describe waste characterization and constituents of the stream. The first three sections of each attachment have been revised to reflect current operating parameters and dangerous waste documentation available for the tank system.

ATTACHMENT A

Treatment by Generator Request
Waste Tanks 102 and 103, 219-S Waste Facility

I. Treatment by Generator for Waste Tanks 102 and 103, 219-S Waste Facility

A. Generator Waste Description

The 219-S Facility, consisting of Tanks 101, 102, and 103, receives intermediate and high level radioactive mixed waste (RMW) generated by the 222-S Laboratory. The primary sources of waste are decontamination operations, unused sample disposal, and aqueous waste disposal. The 219-S Facility retains and neutralizes the liquid waste prior to transferring the waste to the 200W SY Tank Farms.

Intermediate level radioactive liquid wastes generated from decontamination Hood 16 sinks, various room sinks, and the inductively coupled plasma (ICP) spectrometers are routed to Tank 101 via two 4-inch stainless steel lines, encased in a concrete pipe trench. The 222-S Laboratory hot tunnel sumps can be routed to Tank 101, but normally are routed to Tank 103.

High level radioactive waste is generated from laboratory hot cell operations, manipulator repair hood, atomic absorption spectrophotometer, Hood 16 slurping hood and acid decontamination sink, and hot tunnel sumps. The waste is routed to Tank 103 via a 4-inch stainless line, encased in the concrete pipe trench. The 222-S Laboratory hot tunnel sumps are normally routed to Tank 103.

Waste batches in Tanks 101 and 103 are transferred to Tank 102 via a 75 gallons per minute (gpm) steam transfer jet. Once sufficient volume has accumulated in Tank 102, the wastes are treated. Tank 103 may also be used as an alternate treatment tank. After treatment, the waste is remotely batch transferred to Tank 102-SY in the 200 West Area tank farms via a 75 gpm steam jet.

The volume of waste treated and the frequency of treatment in Tank 102 varies depending on laboratory workload and decontamination activities. Treatment occurs on a batch basis, and on the average involves about 3,000 gallons of liquid waste per month. Total waste treated in calendar year 1989 totaled 30,815 gallons. Each transfer to tank farms is followed by a 1,000-gallon water flush, and total water flushes in calendar year 1989 totaled 8,000 gallons. Due to waste minimization efforts, water flushes have been reduced to 500 gallons per transfer. The projected quantities of liquid waste and water flushes to be transferred to tank farms are estimated to be 50,000 gallons annually.

The dangerous waste liquids treated in Tank 102 are comprised primarily of water and nitric acid, with small amounts of inorganic cations (all less than 14.3 ppm except sodium), inorganic anions, small amounts of organic F003 constituents (all less than 1.2 ppm) and finally low molecular weight alcohols from laboratory glassware cleaning. The exact chemical composition is known through process knowledge and analysis results. The liquid waste is typically acidic, with a pH of less than 2.0, thus designating it as a corrosive dangerous waste (D002). Additionally, certain listed, spent non-halogenated solvents (F003) wastes are present in the waste stream along with EP Toxic concentrations of lead (D008). See section IV., "Waste Analysis", for information regarding concentrations of constituents identified through analysis.

The principal risk associated with the wastes in Tank 102 is the radioactive nature of the materials in the tank. Chemically, the contents of the tank present a risk primarily from their corrosive nature. Other inorganic and organic compounds in the liquid waste are of such low concentration that they would not pose a substantial risk to human health or the environment.

B. Waste Treatment Process Description

The purpose of the treatment conducted in Tank 102 is to make the liquid wastes generated during 222-S laboratory activities amenable for storage in the 200 West Area Tank Farms. The treatment involves the addition of sodium hydroxide and sodium nitrite to the waste liquid.

Tanks 102 and 103 are located in the 219-S Waste Handling facility. The facility consists of a 27-foot by 25-foot 6-inch enclosed below grade concrete vault, subdivided into two cells, Cell A and B. The two cells contain three stainless steel tanks (101, 102, and 103), a 22-foot by 13-foot transit building, pipe trench, operating gallery, and an attached concrete-walled sample gallery.

Tank 102, located in Cell A, is a 0.5 inch Type 347 SST 4,000-gallon capacity tank with a working capacity of 3,300 gallons. It is a flat bottom cylindrical tank, 9 feet in diameter by 9 feet tall. Sump 7, which collects overflow from Tanks 101 and 102, is pumped into Tank 101. Tank 103, located in Cell B, is a 0.25 inch Type 309S-Cb SST 1,500-gallon capacity tank with a working capacity of 1,260 gallons. It has a flat bottom, is 6.5 feet in diameter by 7 feet tall with a domed head. The tank is connected by four supports to a concrete and steel cover/support slab. Sump 6, which collects overflow from Tank 103, is pumped into Tank 103. The tanks are equipped with Baily BC-2 pressure transmitters and digital meters which measure the liquid level in the tanks. The tanks are equipped with high level alarms. The secondary containment high level (sump) alarm is set at 6 inches above the floor (approximately 180 gallons).

When a sufficient volume of waste, usually 3,000 gallons, has accumulated in the tank, the tank agitator is activated to thoroughly mix the contents. The waste is sampled and analyzed to determine the caustic ratio necessary to raise the pH to greater than 12. The Tank Farms acceptance criteria specifies a pH of greater than or equal to 12 and a nitrite level of greater than 600 ppm. After the 50 percent sodium hydroxide (caustic) and sodium nitrite are added to the liquid waste, the tank contents are resampled to assure the pH and nitrite criterion have been met. Within 24 hours of analysis, the waste is jet transferred to Tank Farms. Following transfer, Tank 102 and Tank Farm transfer lines are flushed with 500 gallons of raw water.

Operational controls and safety considerations are strictly adhered to during treatment and transfer operations. Tank levels are continuously monitored. Chemical reagents are added slowly to the waste to prevent an exothermic reaction. Extreme care is exercised in the collection and handling of samples.

II. Comparison with State Treatment by Generator Criteria

The criteria established by Ecology in TIM No. 86-3, as presented in preamble of this attachment, were reviewed with respect to the Tank 102 (and 103) treatment process. Following is a discussion of how the Tank 102 treatment process satisfies each of Ecology's criteria.

A. Inherent Risk of the Treatment Process.

The principal risk associated with the waste is the activity and dose from radioactive isotopes. Operators are separated from the tanks and sumps by a wall which effectively eliminates chemical and radiological exposure to personnel during normal operations. Sump monitoring alarms allow for detection of liquids which are routed back into the tank system. All treatment, mixing and transfer is remotely accomplished and is an inherently low risk due to the continuous draw of air through the tank system by the ventilation system. The only risk to personnel and the environment from treatment in Tank 102 is the potential for generation of hydrogen and oxidized gases during the neutralization of the corrosive solution with sodium hydroxide. The tanks and transfer piping are ventilated through a de-entrainer, referred to as Tk-105, and a series of High Efficiency Particulate Air (HEPA) filters under a vacuum of 5 to 6 inches of water. Because of large air flow through the tanks, gases and vapors do not become trapped above tank solutions.

B. Waste Toxicity.

Wastes treated in Tank 102 are dangerous primarily due to their corrosivity. The toxicity of such waste is typically low, and is attributable to pH effects rather than inherent toxicity. As

shown later is section IV.B.4, the presence of sodium nitrite ($NaNO_2$) designates the stream as a toxic mixture (WT02) within the State of Washington. The addition of sodium nitrite is required to protect the stainless steel Double Shell Tank (DST) farms from corrosion attack of the stored wastes. The minute quantities (less than 1.2 ppm) of organic wastes in the waste stream do not contribute to the waste toxicity.

C. Risk and Probability of Release.

The principal avenues of release from Tank 102 would be to the air via the ventilation system and to the environment via the secondary containment system in the cell. As previously discussed, the risk of air release is low due to the de-entrainer which removes moisture from the stream before passing through two stages of HEPA filters. Dehumidified air flows greatly extend the life of HEPA filters. Routine maintenance and filter changout assures system performance and contaminant containment.

Releases to the cell containment system and sumps can occur during rain storms when water can seep between cover blocks or when a tank is accidentally overflowed. The Hanford site typically receives a very low annual rainfall. Procedural controls and operator training greatly reduce the probability of overflowing a tank. Releases to the cell containment system are immediately returned to the tanks via a 20 gpm steam transfer jet. There is no potential for human or environmental contact with the wastes in the cell containment system or sumps. See section III.H and J for a discussion of the containment systems integrity.

D. Relative Benefit to the Environment.

Treatment of waste in Tank 102 renders the waste amenable for storage in the 200 West Area DST. If the treatment did not occur, the waste would not meet tank farm specifications and the corrosion rate in DST would be accelerated. The alternative methods of storage (i.e. direct land disposal) pose a much greater risk to human health or the environment than present DST treatment and storage practices.

III. Compliance with Generator Accumulation Requirements.

The following information presents the measures taken to ensure compliance of the Tank 102 tank system, and the treatment processes conducted in the tank, with the applicable generator accumulation requirements set forth in WAC 173-303-200(1).

General Requirements

A. Transfer of Dangerous Wastes to a Permitted Facility Within Ninety Days of Generation, WAC 173-303-200(1)(a)

As discussed above in Section I.A, wastes that accumulate in Tank 102 is usually treated monthly and transferred immediately after treatment to the 200 West Area Tank Farms. Thus, the waste never accumulates in the tank for more than ninety days after it is generated.

B. Labeling, WAC 173-303-200(1)(d)

Personnel rarely have physical access to Cell A or Tank 102 (and Cell B or Tank 103). The public never has access unless they have specific business at the complex, receive permission and clearances from WHC, and are constantly escorted by a 222-S employee. Activities, personnel training, and procedures clearly identify the contents of, and hazards associated with Tank 102. Facility personnel are adequately protected from exposure to hazards presented by the waste during access to Cells A and B. Additionally, labels which identify the major risk of the waste are present on the cover blocks leading to Cell A (B) where Tank 102 (103) resides.

C. Personnel Training, WAC 173-303-330

The current training documents which are used to train laboratory managers, technologists, and supervisors will be reviewed and reissued by November 1, 1990. Review will ensure compliance with WAC 173-303-330. Current training practices and internal documents meet all WAC requirements except for a documented "Training Plan". Facility personnel which occupy the operating gallery attend Generator Hazards Safety Training (course 006G), Hazardous Material/Waste Job Specific Information (course 006H), and Radiation Worker Initial Training (course 020001). Entry into the cells containing the tanks require additional training which fulfills the 24 hour Occupational Safety and Health requirements promulgated earlier this year. Personnel entering the operating gallery are not subject to the hazards associated with the tank waste and are not required to complete the 24 hour training. Training records for facility personnel are maintained and updated through the site "Soft Reporting" database. The training plan will be, and the training records are available at 222-S Laboratory.

D. Preparedness and Prevention, WAC 173-303-340

Emergency communication devices and fire control equipment are available at or near the location of the treatment tanks. Internal paging phones and offsite phones are located in the operating gallery which provide immediate communication with site personnel. A fire extinguisher is located immediately inside the entrance

door of the operating gallery and a fire hydrant is within 100 feet of the facility. An emergency eye wash station is located directly outside 219-S. All equipment is inspected on a regular basis. The operating gallery is kept free of debris to maintain adequate aisle space. Arrangements and agreements have been made with non-Hanford Site parties who might be expected to respond in the event of emergencies, and these arrangements are documented in a Memorandum of Understanding.

E. Contingency Plan and Emergency Procedures, WAC 173-303-350

An overall Hanford Site emergency plan exists and addresses emergencies that may occur at the Hanford Site. In addition, a Building Emergency Plan (BEP) for the 222-S Laboratory Complex exists to reflect additional emergency situations found at the complex. Attached to the 222-S BEP is a Contingency Plan for the 219-S tank system. The Contingency Plan is kept inside the 219-S operating gallery. The Hanford Site emergency plan and the 222-S BEP are located at 222-S Laboratory and in office 2704-S. The 222-S BEP and Contingency Plans will be revised if new regulations are promulgated, the plan fails during implementation, or the facility changes.

F. Emergencies, WAC 173-303-360

The appropriate procedures, as described in the Hanford Site emergency plan and the 222-S BEP, will be followed in the event of an emergency. Emergencies associated with the 219-S Facility that require implementation of the Hanford Site emergency plan or the 222-S BEP will be reported as soon as they are detected to the site Environmental Protection organization. Notifications will then be made to the appropriate state and/or local agencies who have response roles via the Department of Energy-Richland Operations office. Follow up written reports will be submitted to Ecology within fifteen days after occurrence of a reportable situation.

Requirements for Tank Systems

G. Applicability, WAC 173-303-640(1)

The requirements of WAC 173-303-640 apply to the accumulation and treatment of dangerous wastes in tanks by generators; Except that, WAC 173-303-640(8)(c) does not apply, and in lieu of WAC 173-303-640(5)(b)(iii) for uncovered tanks, a minimum freeboard of two feet must be maintained.

WAC 173-303-640(2), assessment of existing tank system's integrity, require that an assessment of the system be conducted by January 12, 1990. Negotiations of corrective action schedules for dangerous waste tank systems are currently under way with Ecology. Included in these negotiations will be a schedule for conducting tank integrity assessments.

WAC 173-303-640(4), containment and detection of releases will be applicable to the 219-S Waste Facility on January 12, 1991.

H. Integrity Assessment, WAC 173-303-640(2)

A tank system integrity assessment has been performed on the 219-S system. The scope of the assessment included all associated piping, drains, valves, sumps, secondary containment, and tanks that receive, store, accumulate and/or transfer waste within the 219-S Facility. Three areas were evaluated during the assessment. These areas were a leak test of each tank, inspections, and analyses performed on the structural support, corrosion protection and waste/tank compatibility. Results of these investigations were based on leak test data and operating parameters provided by facility engineering staff. The following bullets summarize the assessment findings.

- The tank system is not leaking
- Tanks supports could not withstand a seismic event.
- The chemical resistant coating of Cell A and B has bubbled and peeled and does not provide corrosion protection to the concrete.
- Teflon gaskets used to seal flange connections on Tank 103 have been exposed to radiation doses above the recommended damage threshold and may be embrittled.
- The cover blocks are not adequately sealed to prevent run on from Hanford rain water and soils to the secondary containment.
- The sump level monitoring devices did not protrude far enough down into the sumps.

From these assessment findings, the following recommendations are presented to upgrade the system.

- Perform the next assessment in three years.
- Install permanent lateral restraints for the tanks and cover block supports to withstand a seismic event.
- Replace or upgrade vertical shims and lap joint flanges.
- Replace Teflon gaskets in cell B.
- Remove dirt and sand from cell floor and devise method to seal cover blocks.
- Re-coat cells with chemical resistant coating.

o Upgrade sump level indication systems.

The secondary containment systems were found to be structurally sound based upon inspection although the chemical resistant coating has bubbled and peeled. The vertical shims of the tanks were found to be corroded but were given 3-5 years of continued life expectancy. The 219-S facility is fit for continued use. Operations are continuing and scheduling of the above recommendations will commence following issuance of the final assessment report.

I. Design and Installation of New Tank Systems or Components, WAC 173-303-640(3)

Tank 102, including its components, are existing tank systems as defined in WAC 173-303-040. The requirements of WAC 173-303-640, are applicable only to new tank systems or components, and do not apply to Tank 102.

J. Containment and Detection of Releases, WAC 173-303-640(4)

Tank 102 and associated ancillary piping and connections are provided with secondary containment. Tanks and vault piping have secondary containment provided by the Cells A and B. Piping leading up to the vaults is encased in concrete trenches. The cells are constructed of reinforced concrete, 1-1/2 to 2-1/2 feet thick. As mentioned above, the chemical resistant coating does not meet requirements of WAC 173-303 for impermeable coatings, however the containment cells are structurally intact without cracks and provide adequate containment in the event of a spill or rupture. Scheduling will commence to recoat the cells in the near future. The vaults are equipped with automatic leak detection devices and are capable of jetting liquids immediately back into the tank system. The 219-S system has until January 1991 to become compliant with this requirement.

K. General Operation, WAC 173-303-640(5)

Dangerous wastes and treatment reagents are not placed in the tank system if they could cause the tank to leak, rupture, or otherwise fail. Spillage and overflows are prevented by monitoring the tank levels during each operational shift. Waste feed cutoff systems are in place and are designed and operated to prevent overflow and/or spillage during operation of the tank.

Labeling of the cover block over the tanks identifies the major risks associated with the wastes. The 219-S Facility does not hold extremely hazardous waste (EHW) that is acutely or chronically toxic by inhalation. Waste treatment through mixing and slow chemical addition coupled with the ventilation system prevents the generation and release of vapors, fumes, and other emissions into the air.

L. Inspections, WAC 173-303-640(6) and 173-303-320(1), (2)(a), (b), and (d), and (3)

A written inspection plan and schedule for the tank system has been prepared and implemented. Due to the radioactive nature of the dangerous wastes treated in Tank 102 (and 103), direct observation of the tank system is inconsistent with the Atomic Energy Act and ALARA goals. Thus, the inspection plan for the 219-S system addresses other portions of the facility which are inspected daily. These areas include inspection of: tank levels, tank level and sump alarm annunciator panel, evidence of water or steam line leaks in the sample or operating galleries, sign postings, completion of daily log book, location of the contingency plan and operating procedures, and listed emergency equipment. A petition for rulemaking change to the physical inspection requirements has been submitted to the EPA and Ecology in accordance with the Hanford Federal Facility Agreement and Consent Order Milestone M-22-01.

M. Response to Releases, WAC 173-303-640(7)

If a leak or spill from Tank 102 is detected, the flow or addition of dangerous wastes and/or treatment reagents to the tank will be stopped. If necessary to prevent continued releases from the treatment tank, the tank will be emptied. The cause of the leak or spill will be determined. Steps outlined in the 222-S BEP and contingency plans will be followed to complete required notifications and recovery actions. Appropriate measures will be taken to correct the cause of the leak or spill before the tank is reintroduced to service. Releases to secondary containment systems will be removed immediately upon detection. Any major repairs required as a result of a spill or leak from Tank 102 (or 103) will be certified to Ecology by an independent, qualified, registered professional engineer.

If releases to the environment are detected as a result of a spill or leak from the treatment tanks, such releases will immediately be contained. Environmental releases, if they occur, will be removed and their impacts on the environment will be mitigated. Releases to the environment in excess of applicable Reportable Quantities (RQs) will be reported to Ecology and the National Response Center within 24 hours of detection. The National Response Center will be notified pursuant to 40 CFR Part 302. Any 24 hour report will be followed up by a written report on the release from the 219-S facility to Ecology via DOE-RL.

N. Closure and Post-Closure Care, WAC 173-303-640(8)

At closure, dangerous wastes, and contaminated equipment and structures (including underlying materials contaminated with

dangerous waste or dangerous waste constituents) will be removed from the treatment tank and surrounding area or else decontaminated.

Closure of Tank 102 and surrounding area will be performed in a manner that will: minimize the need for further maintenance; control, minimize, or eliminate post-closure releases that could threaten human health or the environment; achieve the removal and decontamination criteria of WAC 173-303-610(2)(b); and be consistent with the requirements of the Atomic Energy Act and ALARA goals.

O. Special Requirements, WAC 173-303-640(9) and (10)

Tank 102 does not receive or handle ignitible, reactive, or incompatible dangerous wastes. Treatment processes in the tank are conducted to prevent the introduction and generation of ignitible, reactive, and incompatible wastes and materials. The interior of the tank is compatible with all dangerous wastes and treatment reagents managed in the tank.

IV. Waste Analysis

A. 219-S Waste Characterization

1. Theoretical Waste Characterization

Wastes accepted at the 219-S Waste Treatment Facility are generated from laboratory activities in the 222-S building. Wastes accepted into 219-S include unused portions of site process samples, corrosive decontamination solutions of nitric acid, and aqueous waste generated from inside laboratory hoods during analysis. These wastes are classified radioactively as intermediate-level (<10mR/hr) or high-level (>10mR/hr) wastes. Organic wastes generated by the 222-S Laboratory are not accepted in the tank system, and are disposed of separately in labpacks.

Aqueous waste identification occurs in the generating laboratory, where specific analytical procedures are conducted in assigned hoods for radiation control and prevention of cross-contamination. Thus, the chemicals used in a specific hoods generally change very little. The wastes are collected in glass bottles in the hoods in each laboratory work area. The bottles are kept on vacuum while collecting wastes. The chemicals involved in each procedure and disposed of to bottles are known through process knowledge. When full, the bottle is taken to Hood 16 in Room 2B for discharge to Tk 101. Wastes that are less than 10mR/hr are decanted from the collection bottle into Hood 16 sink drains. Wastes that are greater than 10mR/hr are jetted or "slurped" to Tk 103.

Radioactive samples are received at the laboratory from various facilities on site. All samples are received and are prepared for analysis. Some samples are diluted and placed into a lead shielded

sample carriers. Following analysis, the unused sample portion and the carriers are taken to Hood 16. The sample is introduced into the 219-S system through pouring or slurping in Hood 16. The lead sample carrier is decontaminated with nitric acid and water and reused for the next sample.

2. 219-S Sample Analysis Data

Sample data was generated from a sample taken prior to the 219-S Tank Integrity Assessment and prior to discharge to the 200 W Area DST. Results were received on April 25, 1990 for volatiles, semi-volatiles, EP Toxic metals, cations, cyanides, and sulfides. Analysis of anions was completed by 222-S Laboratory personnel. Elements found above detection limits are reported in Table 1.

Table 1

SAMPLE RESULTS

Constituent	Code	Conc'n (ppm)
Hexone	F003	1.220
Xylene	F003	0.085
Acetone	F003	0.108
Ethyl Benzene	F003	0.007
Propanol	----	0.094
Ethanol	----	0.860
Strontium	----	3.270
Zinc	----	12.200
*Calcium	----	14.000
Sodium	----	5276.000
*Nickel	----	0.314
*Copper	----	0.491
*Vanadium	----	0.116
Aluminum	----	5.730
*Manganese	----	1.716
Potassium	----	14.300
Iron	----	11.100
*Magnesium	----	3.590
*Chromium	----	0.569
Lead	D008	13.300
Boron	----	1.120
Nitrite	WT02	1,999.000
Nitrate	----	540.000
Sulfate	----	250.000
Fluoride	----	15.450
Chloride	----	320.800
Hydroxide	D002	1,700.000

* Source of cation from raw water impurities.

B. 219-S Waste Designation

1. Discarded Chemical Products

The first step for waste designation is comparing the waste to the "Discarded Chemical Products List", WAC 173-303-9903. The 222-S laboratory contains many chemicals to complete required analysis. When chemicals reach their expiration date, they are recertified for use or labpacked out of the laboratory as waste. No pure chemical products are discarded to the 219-S tank system and administrative controls, such as personnel training and procedural limitations, ensure that accidental discharges are avoided. No chemicals appearing on the "Discarded Chemical Products List," WAC-173-303-9903, are discarded into the 219-S system.

2. Dangerous Waste Sources

The second category for waste designation is comparing the waste to the "Dangerous Waste Sources List", WAC 173-303-9904. The 222-S laboratory contains many solvents which are required to complete laboratory analyses. Solvents are regulated when they are spent or discarded. Laboratory solvents are not intentionally discarded into the 219-S system and administrative controls ensure accidental discharges are avoided. All organic solutions are labpacked as mixed waste. The waste stream is designated as F003 from the "Dangerous Waste Sources List," WAC-173-303-9904, due to two sources. The first source is disposal of single shell and double shell tank characterization samples received for analysis which contain Hexone. The second source is minute quantities of Xylene and Ethyl Benzene from organic/aqueous phase separations inside laboratory hoods immediately following an analysis requiring liquid-liquid extractions. Ethyl Benzene is an impurity in Xylene reagents due to their chemical similarity.

3. Infectious Dangerous Waste

The third category for waste designation is "Infectious Dangerous Wastes", WAC 173-303-083. The 222-S Laboratory does not use, treat, store, or dispose of any infectious dangerous waste. This category is not applicable to the laboratory.

4. Dangerous Waste Mixtures

The fourth category for waste designation is "Dangerous Waste Mixtures", WAC 173-303-084. The 219-S waste stream is known to have constituents which are identified in the EPA Spill Table 302.4 in 40 CFR, and in the National Institute for Occupational Safety and Health (NIOSH) document, Registry of Toxic Effects of Chemical Substances.

Toxicity: In order to determine the 219-S waste stream toxicity the following assumption was made. Cations and anions appearing in Table 1 were paired together based on chemicals added for waste treatment and chemicals which are frequently used inside of the laboratory for analysis. Laboratory analysis of this waste stream reports cations and anions found in solution rather than identifying actual compounds. The compounds and their concentrations are reported in Table 2.

Table 2

219-S Dangerous Waste Mixture Constituents

Compound	Toxic Category	Conc'n (M)	Weight %
NaOH	C	1.0E-01	0.394
$NaNO_2$	B	2.9E-02	0.197
NaCl	D	8.8E-03	0.0507
NaF	C	4.4E-04	0.00182
Na_2SO_4	-	2.0E-03	0.0279
NaNO3	D	8.7E-02	0.728
$Al_2(SO_4)$	-	1.0E-04	0.0014788
$SrNO_3$	D	3.7E-05	0.000542
ZnF_2	C	1.8E-04	0.001834
$FeCl_3$	C	1.9E-04	0.00303
K_2SO_4	-	1.8E-04	0.00309
Water	-	-	98.59
Total			100.00

From the above weight percent values and using the equivalent concentration equation found in WAC 173-303-101(4)(b), the E.C. % was found to be 0.0024. Comparing this value to the Dangerous Waste mixtures Graph found in WAC 173-303-9906, the 219-S waste stream is toxic (WT02).

Persistence: The 222-S laboratory does not discharge any persistent dangerous waste into the tank system. Halogenated hydrocarbons are labpacked out of the laboratory. The sample data presented Table 1 verifies the effectiveness of the administrative controls. The 222-S laboratory does not use, store, treat, or dispose of polycyclic aromatic hydrocarbons. Therefore, this category is not applicable to the laboratory.

Carcinogens: The final criteria in designating a dangerous waste mixture are positive or suspected carcinogens. Each of the constituents listed in Table 2 were compared to the NIOSH Registry. There were no substances identified as an International Agency for Research on Cancer (IARC) human or animal, positive or suspected carcinogen. Therefore, this category is not applicable to the laboratory.

5. Dangerous Waste Characteristics

The fifth category for waste designation are the "Dangerous Waste Characteristics", WAC 173-303-090. The four characteristics are ignitability, corrosivity, reactivity, and EP Toxicity.

Ignitability: The 219-S aqueous waste stream does not meet any of the definitions of ignitability defined in WAC 173-303-090(5).

The stream contains less than 24 percent alcohol by volume. The waste stream is not an oxidizer as defined in 49 CFR 173.151. The stream does contain nitrates (NO_3^-) and nitrites (NO_2^-) in concentrations shown Table 1, however, the solution does not yield oxygen readily to support combustion of organic matter.

Corrosivity: The 219-S aqueous waste stream frequently exhibits a pH less than 2.0 prior to treatment and exhibits a pH greater than 12.5 following addition of sodium hydroxide. Therefore, this waste stream is designated as corrosive (D002).

Reactivity: The 219-S waste stream does not meet any of the definitions of reactivity defined in WAC 173-303-090(7). The waste is not unstable, does not react violently with water, does not form an explosive mixture, does not generate toxic gases, is not explosive in any manner, and therefore is not regulated under this requirement.

EP Toxicity: As identified in Table 1, sample results showed that the 219-S aqueous waste exhibits EP Toxicity for lead (D008). The only other detectable cation regulated by WAC 173-303-090(8) was chromium which appeared below the regulatory limit of 5.0 ppm. The laboratory does not use pesticides, and therefore, did not test for these compounds.

C. Waste Designation Summary and Conclusions

The 219-S waste stream is designated a toxic, listed, characteristic dangerous waste according to WAC 173-303-070, Designation of dangerous waste. Table 3 summarizes the designation of this stream.

Table 3

219-S Designation Summary

Code	Reason
F003	Non-halogenated spent solvents
D002	Corrosive/Caustic
D008	Ep Toxic Lead
WT02	Toxic Waste Mixture

The 219-S Facility has a Part A, Dangerous Waste Permit filed. The current Part A Permit lists dangerous waste code D002 (corrosivity) for this waste stream. Due to recent sample analysis and redesignation, the Part A will be resubmitted to include Dangerous Waste Numbers for newly identified constituents while the TBG for the 219-S Waste Facility is being evaluated.

222-S LABORATORIES
TANKS 102 AND 103
SITE PLAN

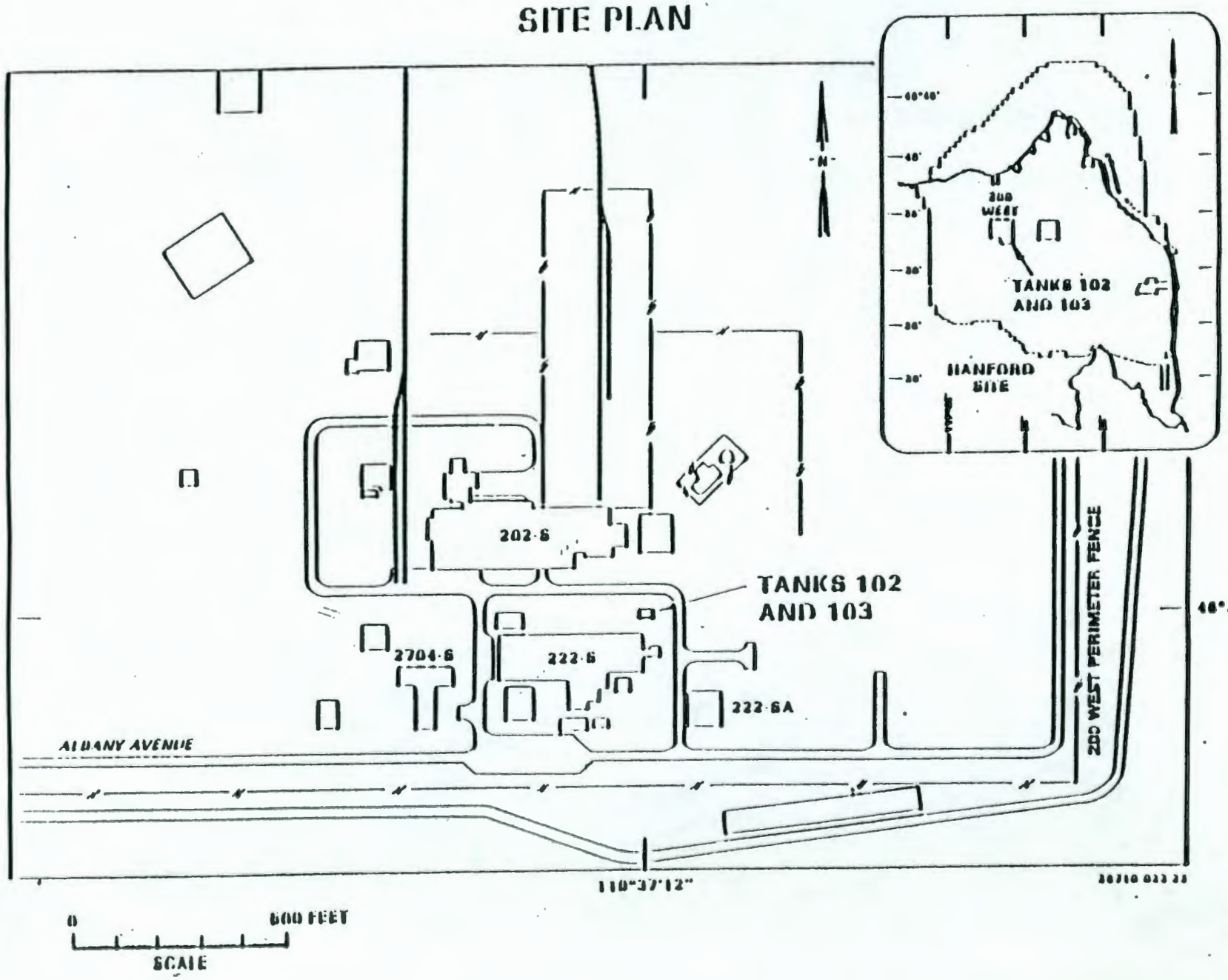

219-S BUILDING
TANKS 102 AND 103

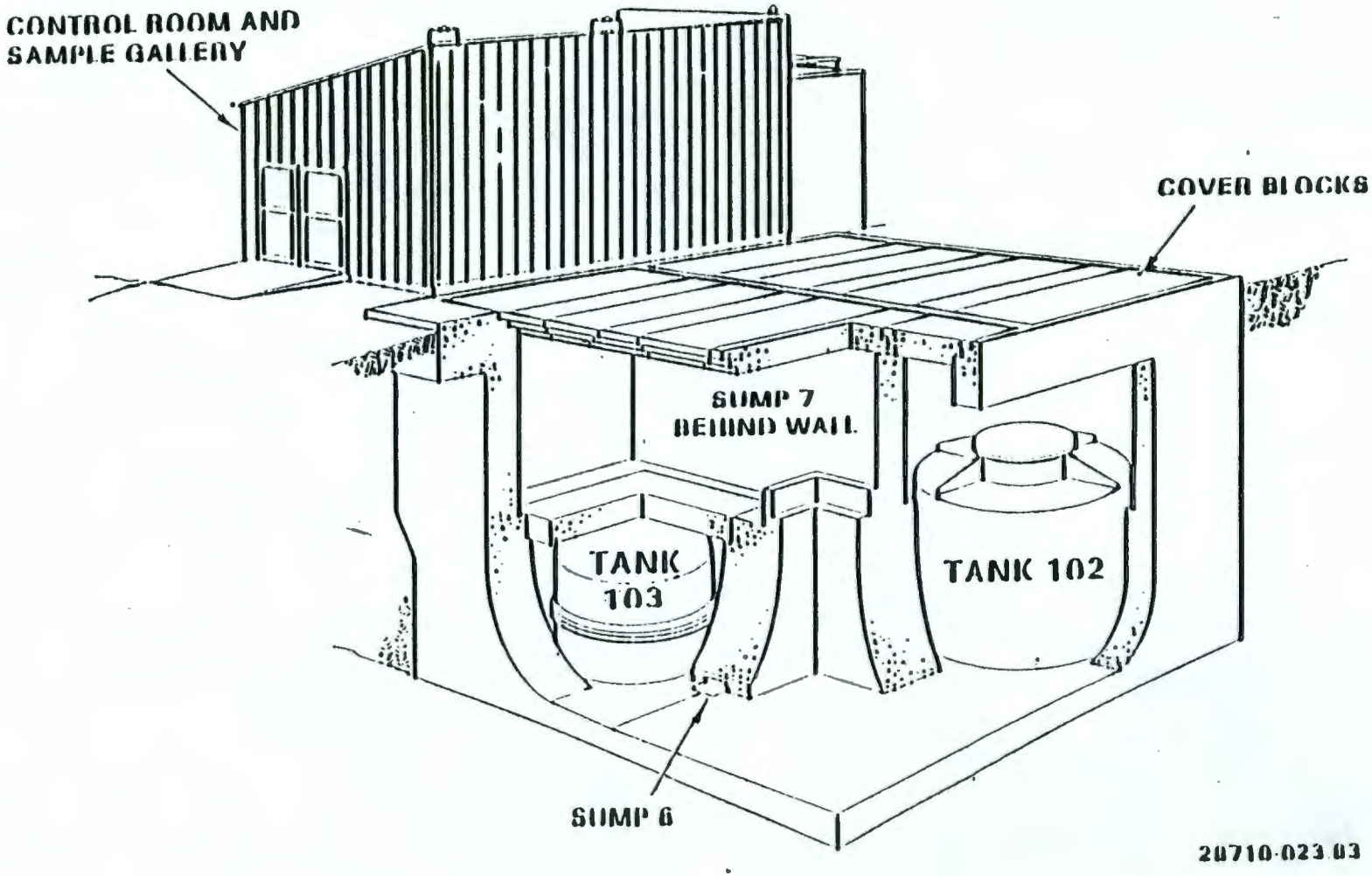

ATTACHMENT B

Treatment by Generator Request
Waste Treatment Tanks, PUREX Facility Canyon

I. Treatment by Generator for Tanks E5, F15, F16, F18, G6A, G7, U3, U4, and E-F11 Concentrator, PUREX Facility

A. Generator Waste Description

The PUREX Facility extracts plutonium and uranium from irradiated fuel rods. Building 202-A is the main canyon building where the plutonium and uranium extraction process takes place.

Within Building 202-A, Cells E, F, G, and U and the sampling gallery are sites of dangerous waste treatment activities at PUREX. U Cell is located at the northeast end of Building 202-A and is not part of the PUREX canyon.

All dangerous waste treatment vessels and ancillary equipment are constructed of 304-L stainless-steel. The volume of each dangerous waste treatment vessel is:

- TK-E5 5,000 gallons
- TK-F15 5,000 gallons
- TK-F16 5,000 gallons
- TK-F18 5,000 gallons
- TK-G6A 1,100 gallons (proposed)
- TK-G7 13,400 gallons
- TK-U3 8,000 gallons
- TK-U4 8,000 gallons
- E-F11 2,600 gallons

The purpose of the dangerous waste treatment conducted in tanks at PUREX is to make liquid wastes generated during the PUREX process amenable for storage at Tank Farms. In general, the treatment involves raising the pH with sodium hydroxide and adding nitrites in order to meet Tank Farms corrosion acceptance criteria.

Various dangerous waste streams are produced during the PUREX process. Primary radioactive and chemical concerns (i.e., nitrates, nitrites, pH, hydroxides) have been well characterized through process sample analysis. Other non-radioactive hazardous waste constituents could potentially exist in trace quantities. Waste stream concentrations of these other constituents have been determined based on process knowledge. Due to the high radiation dose rates received to personnel during sampling and analysis, further characterization of trace constituent concentrations will not alter waste management practices and does not meet ALARA goals established for personnel exposure. Consistent with ALARA principles, all exposure to radiation, regardless of dose-rate, must be justified by the benefit resulting from the exposure.

Cladding Removal Wastes (TK-E5)

Three types of Mixed Waste (MW) are generated during decladding operations. These three waste streams are collectively designated Cladding Removal Wastes (CRW):

- Decladding Waste - This waste is generated when the zirconium cladding is removed from the irradiated fuel elements. It consists of ammonium fluoride-ammonium nitrate (AFAN) which complexes the zirconium metal during the decladding process.

- Spent Metathesis Waste - After the zirconium has been removed from the fuel rods, uranium and plutonium fluoride compounds are metathesized using a solution of potassium hydroxide (KOH). The spent potassium hydroxide solution constitutes the spent metathesis waste.

- Metathesis Rinse Waste - Residual metathesis solution and declad solution from the initial decladding process are washed with demineralizer water from the fuel rods resulting in metathesis rinse waste.

CRW wastes are generated each time a new batch of fuel elements is decladded. The annual quantity of CRW waste generation depends on whether PUREX is operating and on the rate at which the process is being conducted. Theoretically, one batch of fuel elements can be processed every 48 hours. In 1987, 403,000 gallons of CRW waste were treated in Tank E5.

All three CRW streams are jetted from the process tanks to Tank E5 for treatment. Piping connecting the process tanks to Tank E5 is located in a reinforced concrete canyon cell or hot pipe trench.

Prior to being jetted to Tank E5, the decladding solution is centrifuged to remove residual plutonium and uranium in two parallel centrifuges (E2 and E4) which are fed from the centrifuge feed tank (Tank E3) (See Figure 1). This recovery process is intended solely to recover plutonium and uranium product and is not a dangerous waste treatment activity.

Declad waste and metathesis rinse waste are not normally corrosive dangerous wastes when received at Tank E5 (i.e., pH approximately 8.1), however, data indicate that declad waste can exceed a pH of 12.5 on occasion. Thus, the declad waste is periodically a corrosive dangerous waste (D002). Spent metathesis waste has an average pH of over 13.7 when received at Tank E5. Thus, metathesis rinse waste is designated a corrosive dangerous waste (D002).

TK-E5 AND AMMONIA WASTE STREAM FLOW DIAGRAM
PRESENT PROCESS

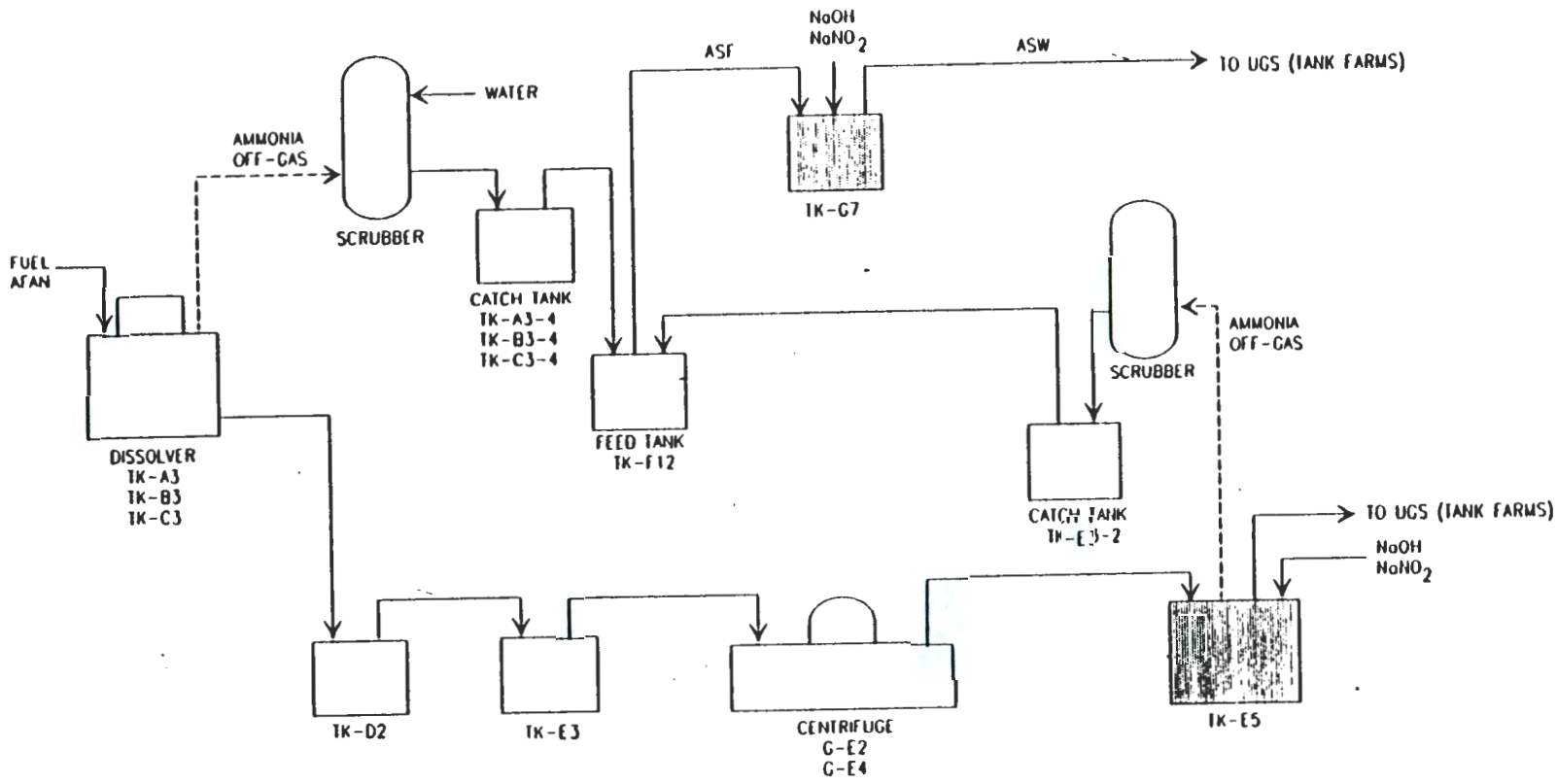

FIGURE 1

Declad waste and metathesis rinse waste contain EP Toxic levels of chromium (50 to 100 ppm) resulting from corrosion by fluoride on the stainless steel dissolvers during decladding operations. Thus, these two waste streams are regulated as EP Toxic dangerous wastes for chromium with the dangerous waste number D007.

The declad waste is determined to be an Extremely Hazardous Waste (EHW) for toxicity, after sodium hydroxide/sodium nitrate treatment. Thus, this waste stream would have the dangerous waste number WT01 in addition to D002 and D007. (See Section IV.A.2)

Spent metathesis waste, after neutralization, is determined to be designated as a toxic EHW. Thus, spent metathesis waste has the dangerous waste number WT01 in addition to D002. (See Section IV.A.2)

Metathesis rinse waste is determined to be designated as a toxic Dangerous Waste (DW) with the dangerous waste number of WT02 in addition to D002 and D007 (See Section IV.A.2).

The primary risk associated with CRW in Tank E5 is the radioactive nature of the materials in the tank. Chemical constituents in spent metathesis waste and, periodically, declad waste presents a risk primarily due to corrosivity. All three waste streams are toxic, especially to aquatic organisms.

Neutralized Zirflex Acid Waste (TK-F15/F16)

Tanks F15 and F16 are used to treat high level acid waste known as Neutralized Zirflex Acid Waste (NZAW), generated from the solvent extraction process. NZAW contains most of the fission products that have been separated from the first decontamination cycle in the HA column. After leaving the HA column, the waste is concentrated and some acid removed as nitrogen oxides in the F6 concentrator. (Approximately 25 percent of the nitrogen oxides are recovered in the F5 acid absorber and reused in the process as nitric acid).

Bottoms from the F6 concentrator (i.e., NZAW) flow to Tank F26 and are then transferred to TK-F15 or TK-F16 in approximately 2,600-gallon batches where the waste is sampled. If the plutonium has been adequately removed, the waste is treated in TK-F15 or TK-F16 by sugar denitration, pH adjustment and nitrite addition (See Figure 2).

Generation rates for NZAW vary depending on the frequency and rate of operation at PUREX. In 1987, 137,000 gallons of NZAW waste were treated in Tanks F15 and F16.

TK-F15/F16 WASTE STREAM FLOW DIAGRAM

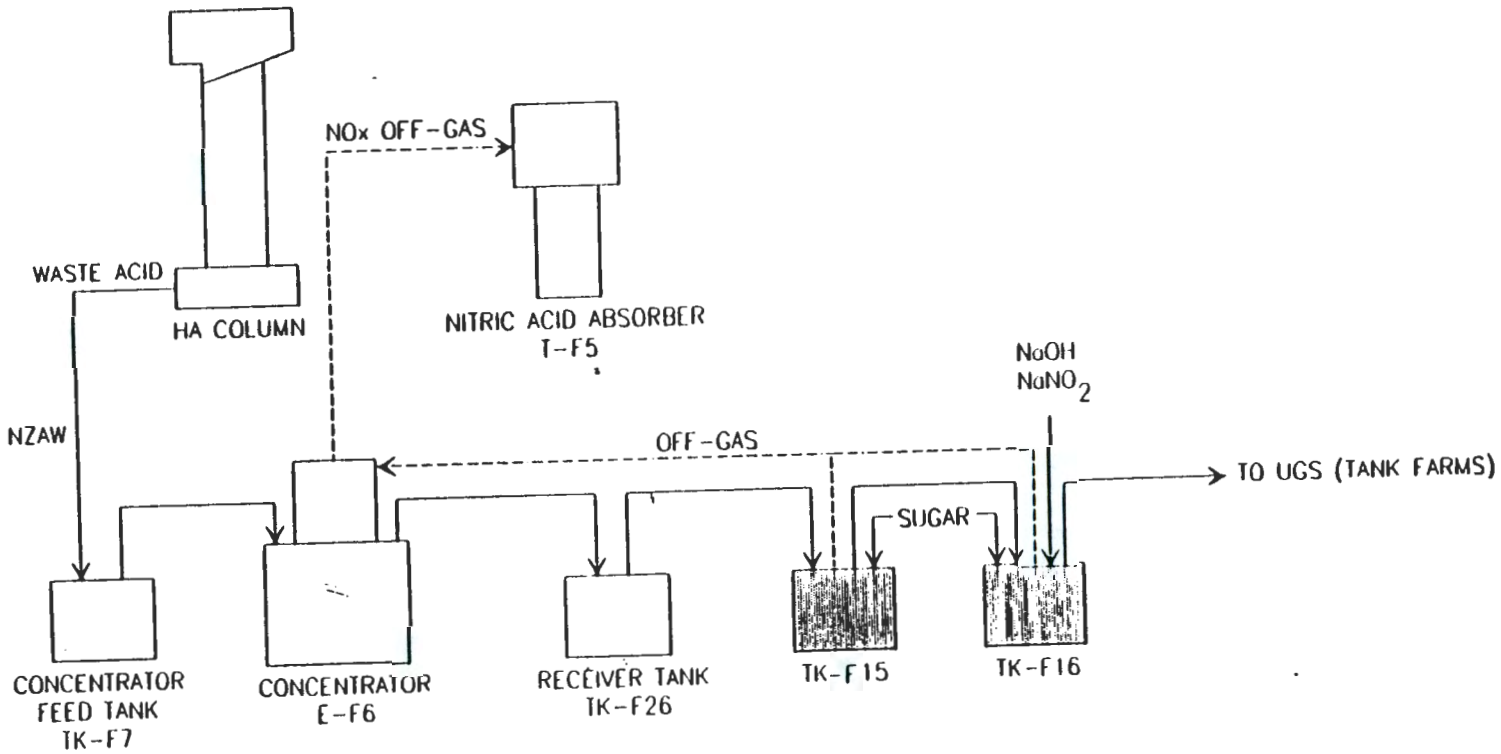

FIGURE 2

Prior to treatment, NZAW waste is acidic due to the high levels of nitric acid causing the waste to be regulated as a corrosive dangerous waste (D002). The waste also contains metal impurities from the dissolved fuel elements and corrosion. Based on knowledge of fuel element composition and corrosion rates, it is determined that EP Toxic concentrations of chromium range up to 65 ppm causing the waste to be designated DW for chromium (D007). The waste is also determined to contain EP toxic levels of cadmium (D006) (ie. 500 to 5,000 ppm). The waste may also contain trace amounts of lead (D008) introduced as a contamination of the essential materials and EP Toxic amounts of mercury (D009) from spent laboratory solutions recycled to recover uranium and plutonium. The waste is thus designated as WT01 in addition to D002, D006, D007, D008 and D009 (See Section IV.B.2).

The primary risk associated with NZAW waste is the radioactive nature of the material in the tank. The primary non-radioactive concern with the waste is corrosivity due to the low pH prior to treatment.

Miscellaneous Mixed Wastes (TK-F18)

Tank F18 receives miscellaneous mixed solutions from: PUREX canyon cell floor sumps; drainage from the vessel vent, condenser vent, and sampler headers; hot shop maintenance cell solutions; sample gallery floor drain solutions; and solutions generated from bottoms change outs of the F11 concentrator. Solutions are pumped or jetted to Tank F18 from their point of origin (See Figure 3). Transfer piping is located in the reinforced concrete hot pipe trench.

Generation rates for wastes that are transferred to Tank F18 vary considerably depending on PUREX operating rates. During 1987, 648,000 gallons of waste were treated in Tank F18.

The primary hazardous constituent in Tank F18 is nitric acid causing the waste to be designated as a corrosive dangerous waste (D002) due to low pH. The tank may contain any of the various other chemical constituents used at PUREX in minute concentrations from cell floor drains or other PUREX processes vessels. Thus, the waste stream would have the dangerous waste number WT01, along with D002, D006, D007, D008, and D009 (See Section IV.C.2).

The primary risk associated with miscellaneous wastes in Tank F18 is due to the radioactive nature of the material. The primary non-radioactive concern with the miscellaneous waste is its corrosive nature due to low pH prior to treatment.

TK-F18 WASTE STREAM FLOW DIAGRAM

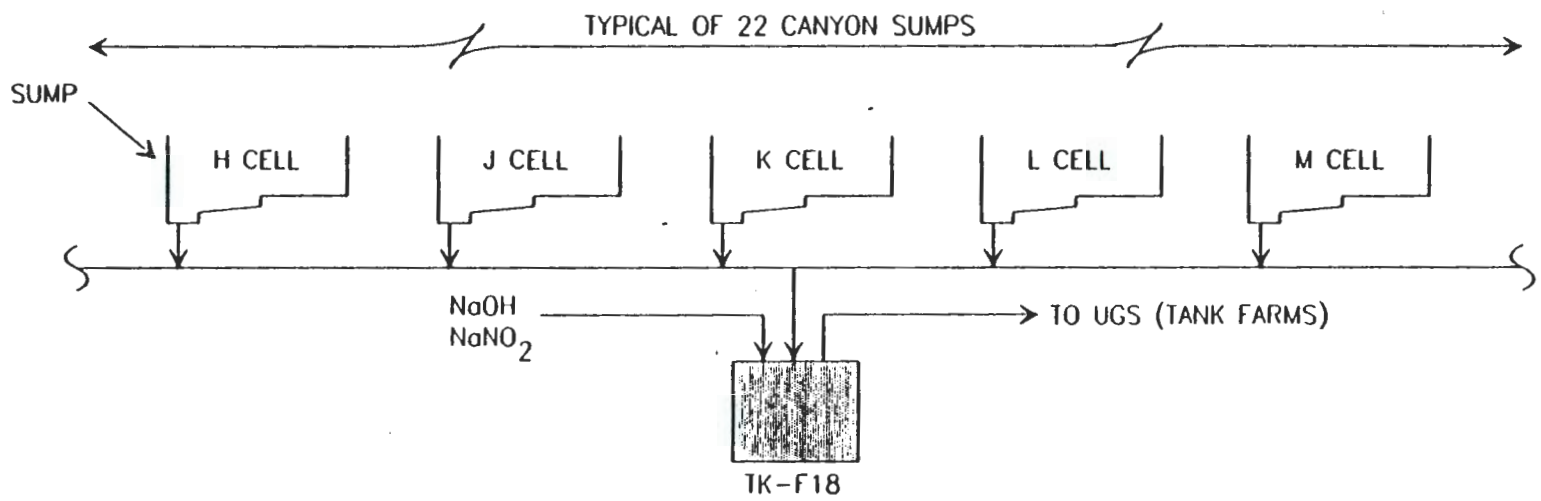

FIGURE 3

Miscellaneous Headend Wastes (TK-U3/U4)

Tanks U3 and U4 receive miscellaneous mixed wastes from throughout the headend portion of PUREX. Waste sources include:

- Laboratory wastes under 5 millirem, including decontamination solutions, samples after analyses, etc;
- Laboratory HVAC duct drain and vacuum pump air separator condensate;
- U Cell sumps (including rain water);
- Dilute ammonium nitrate from the main stack and filter flush water;
- Solutions from railroad car decontamination operations; and
- Low pH solutions from acid fractionator building sumps.

U Cell is not part of the PUREX Canyon; it is separated from the canyon by the storage gallery. Waste streams are jetted or pumped from the point of generation to either Tank U3 or U4 (See Figure 4). Standard procedure is to fill one tank then sample and treat in that tank while the other tank begins to fill. Thus, each tank in turn receives and treats miscellaneous wastes.

Generation rates for miscellaneous wastes received at Tanks U3/U4 vary depending on the magnitude and frequency of operations at PUREX. In 1987, 392,000 gallons of dangerous waste were treated in Tanks U3/U4.

Water makes up the majority of the waste stream received at Tanks U3/U4. Low pH wastes constitute the primary chemical constituent in miscellaneous wastes received at Tanks U3/U4. The average pH of batch wastes collected in Tanks U3/U4 is 4.5 based on analytical data. On occasion, the data indicates that the pH can fall below 2.0. Thus, wastes received at Tanks U3/U4 are, periodically, corrosive dangerous wastes (D002). Other constituents from spent laboratory solutions and decontamination operations may also be present in small amounts. Since many different constituents can be present in small quantities from the laboratory and from decontamination operations, the waste stream is given a dangerous waste number of WT01, along with D002, D007, D008, and D009 (See Section IV.D.2).

The primary risk associated with miscellaneous wastes in Tanks U3/U4 is due to the radioactive nature of the material. The primary non-radioactive concern with this waste is its occasional corrosive nature due to low pH values.

TK-U3/U4 WASTE STREAM FLOW DIAGRAM

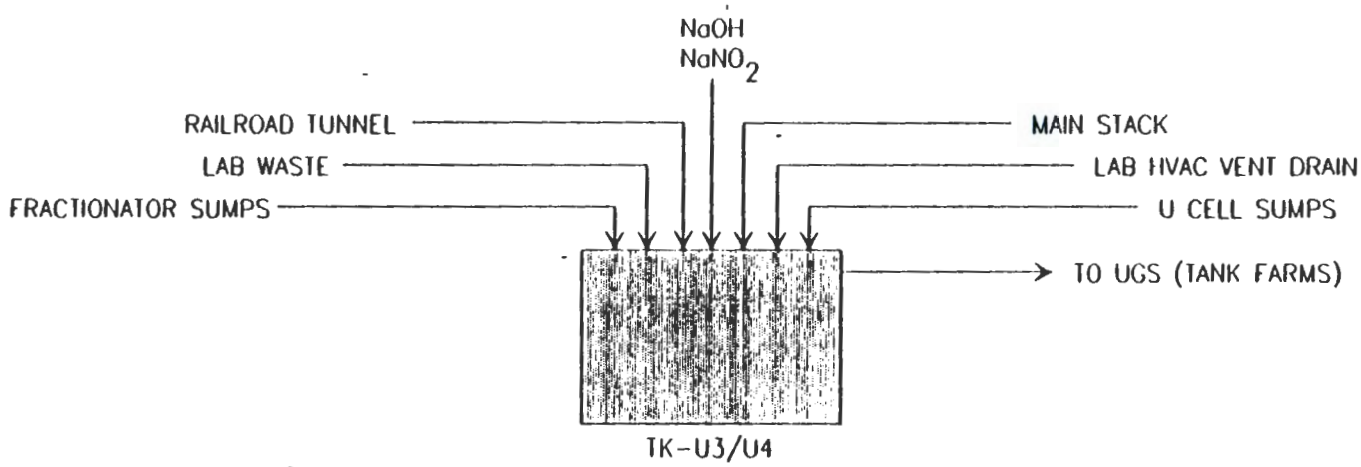

FIGURE 4

Headend Ammonia Waste (TK-G6A/G7/E-F11)

A solution of Ammonium Fluoride-Ammonium Nitrate (AFAN) is used in the PUREX Plant dissolvers to chemically declad zirconium-clad fuel from N Reactor. During the decladding operation, ammonia is scrubbed from the off-gasses by water to form an aqueous ammonium hydroxide solution.

These waste streams are described below:

AMMONIA SCRUBBER FEED (ASF) - The majority of the stream volume is generated when the ammonia laden off-gases are absorbed in dissolver condensate or scrubbed in scrubbers using water. A smaller volume is generated when the cladding removal waste (CRW) is treated in Tank E5 and ammonia is scrubbed from the off-gas. The streams generated by scrubbing ammonia from the off-gasses are called ammonia scrubber feed (ASF).

During fuel decladding and solids metathesis, about 70 percent of the ammonium compounds charged to the dissolvers are evolved as ammonia gas, most of which is absorbed in dissolver condensate or scrubbed from the dissolver off-gas with water. The remaining 30 percent of the ammonia remains in the CRW until treated in Tank E5 and transferred to underground storage in Tank Farms (See Figure 1). During treatment in Tank E5, about 15 percent of the CRW ammonium ion content is released as ammonia gas, which is then scrubbed with water. The ammonia scrubber solutions from the three dissolvers and the E Cell operations are combined and become the ASF stream. The ASF contains ammonium hydroxide, with low levels of radionuclides. Although the volume of scrubber water is dependent on the operation of the decladding process, there is generally between two and four million gallons of ASF generated annually.

ASF has an ammonia concentration of between 0 and 1.4 M, and averages 0.4 M. This solution has a pH range of 7 to 12.3. The ASF is determined to be a DW due to the toxicity of ammonium hydroxide and is designated WT02.

ASF is currently treated in Tank G7 to meet Tank Farm specifications by adjusting the pH and adding nitrite before being discharged to Tank Farms. Plans are under way to treat ASF waste to destroy the ammonia. The planned treatment activity will occur in Tank G6A, concentrator F11 and Tank G7 (see Figure 5). When this treatment system comes on line, the following two waste streams will be produced.

AMMONIA SCRUBBER WASTE (ASW) - The ASF solution will be neutralized in Tank G6A to a pH of 5.0 to 7.0 and concentrated in F11. The radionuclides and ammonium nitrate in the concentrator bottoms, which become ammonia scrubber waste (ASW), will be transferred to Tank F12 and then to Tank G7 where the ammonia will be reduced to

TK-E5 AND AMMONIA WASTE STREAM FLOW DIAGRAM
PROPOSED PROCESS

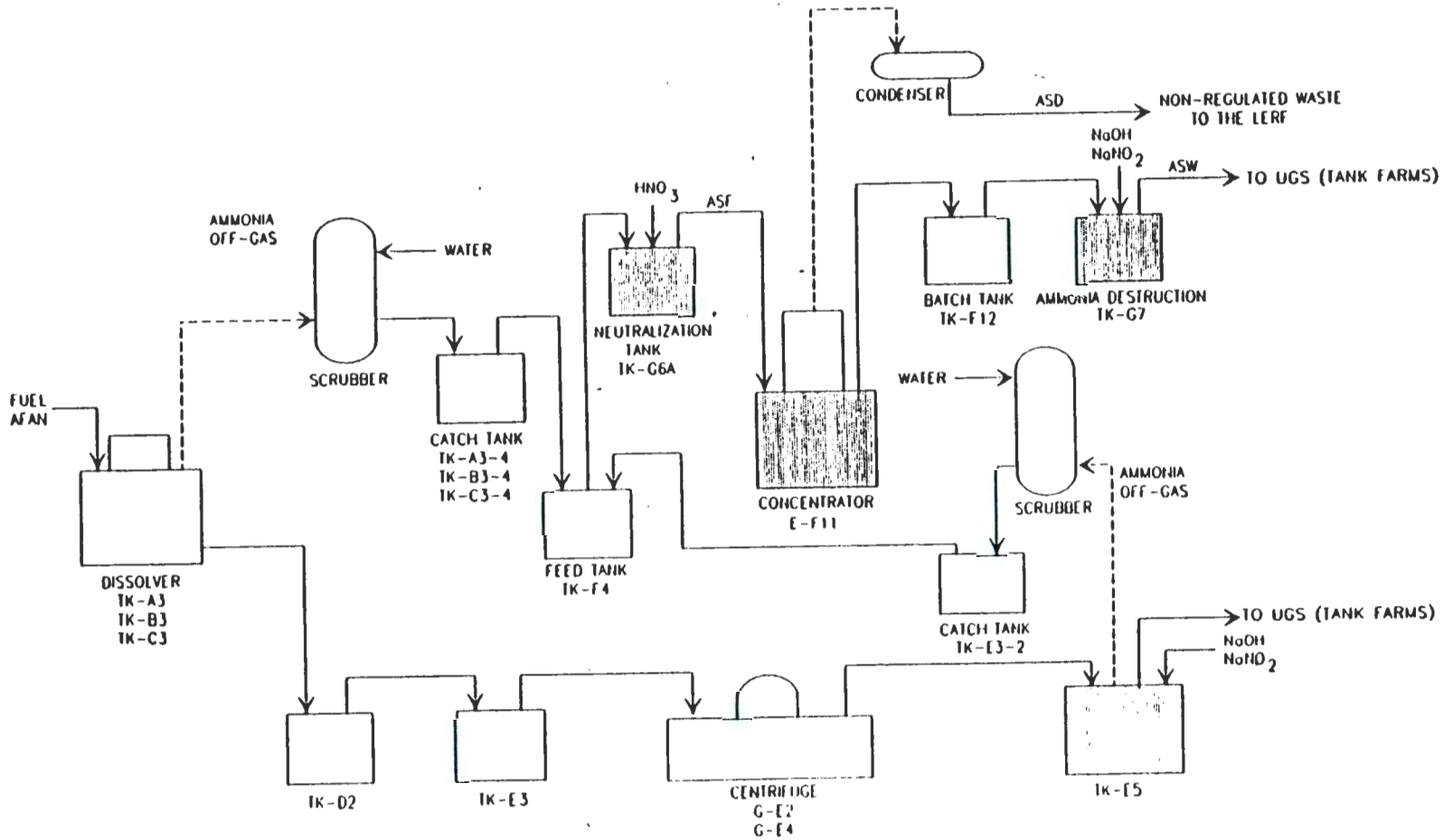

FIGURE 5

a theoretical concentration of about 0.005M ammonia by nitrite addition. The pH of the waste will be adjusted to greater than 12 before transferring to Tank Farms. Thus, the ASW will have dangerous waste numbers of WT02 and D002 (See Section IV.E.2).

AMMONIA SCRUBBER DISTILLATE (ASD) - The ASD will be generated at the F11 concentrator by boiling the ASF and condensing the water vapors. The condensate is known as ammonia scrubber distillate (ASD). The ASD will be discharged to the Process Distillate (PDD) header, for disposal to the liquid effluent retention facility (LERF). ASD pH will range from 8 to 9. This waste will not be a dangerous waste, but will contain minute quantities of radionuclides. The ASD will be further treated (covered in another permit) before being discharged to the ground.

B. Waste Treatment Process Description

PUREX cells containing the waste treatment vessels are fully enclosed reinforced concrete structures designed to provide protection against radiation exposure and to provide secondary containment. The cells were designed with sloped floors, sumps to collect liquid, and liquid detection and transfer systems in the event of a leak or spill from one of the process or treatment vessels.

Each cell in the PUREX canyon is 14 feet wide, 39.5 feet deep and varies in length. The floors of the cells are 5.5 feet thick. The hot pipe trench containing piping through which waste is transferred and the pipe trench leading to the 241-A-151 diversion box are similarly totally enclosed with reinforced concrete. The hot pipe trench parallels the PUREX canyon and is 30 feet deep, 12 feet wide at the top, and 11 feet wide at the bottom. Access is provided to each canyon cell and the hot pipe trench by removing massive concrete cover blocks with a crane. However, cover blocks normally remain in place during operations and are not removed even when PUREX is not operational due to radiological concerns, except for maintenance or charging fuel to the dissolvers.

Secondary containment in U Cell is provided by a 1.5 foot thick reinforced concrete floor that is sloped to two collection sumps. There are also leak detection and transfer systems associated with these sumps. Unlike the canyon cells, personnel enter U Cell on occasion to change valving and perform maintenance.

Operational controls are strictly adhered to when conducting waste treatment processes at PUREX. Continuous monitoring is provided during treatment operations for tank level (including high and low level alarms), temperature, pressure, fire, and leak detection. Treatment processes are conducted by procedure to prevent unplanned reactions from occurring.

CRW Waste Treatment Process

The three CRW wastes are treated independently in Tank E5 and in order of their generation during the decladding operation. Thus, declad waste is treated first, then spent metathesis waste, and finally, metathesis rinse waste.

Declad waste is treated by adding sodium hydroxide and sodium nitrite to the waste in Tank E5 to Tank Farm corrosion prevention specifications (pH $\geq$12.0 and a nitrite concentration >0.011M). The line to Tank Farms is flushed with water after transferring waste to the underground storage tanks.

The declad waste treatment reaction causes 10 to 20 percent of the ammonia in solution to be released. This ammonia gas is scrubbed from the off-gas treatment system which is then treated as described in a later section.

Spent metathesis waste normally arrives at Tank E5 with a pH greater than 12 which meets Tank Farm pH specifications. The waste is sampled and sodium nitrite is added. Sodium hydroxide is added only if the pH is below Tank Farm specifications (i.e., pH less than 12). The transfer to underground storage is followed by a water flush.

Metathesis rinse waste is treated in a manner similar to the declad waste in that sodium hydroxide and sodium nitrite are added to Tank E5. The treated waste is sampled prior to being transferred to underground storage. The line is flushed with water following the transfer to underground storage.

NZAW Waste Treatment Process

Zirflex acid solution is received in Tank F15 in 2,600-gallon batches. The waste is sampled and, if it does not have to be reworked, the solution is declared waste, heated, and a sugar (sucrose) solution is added to the tank over a 16- to 24-hour period. The resulting reaction between the nitric acid and the sugar produces NO_x and CO_x gases. These off-gasses are routed to the F5 acid absorber where approximately 25 percent of the nitrogen oxides are recovered as nitric acid for reuse in the process.

After initial treatment in Tank F15, the NZAW waste is transferred to Tank F16. The waste is sampled to determine the appropriate amount of sodium hydroxide needed to achieve Tank Farm corrosion specifications. The sodium hydroxide and sodium nitrite are added, agitated for an hour, then resampled to ensure that 0.8 to 1.0 M free hydroxide is present prior to being transferred to underground storage.

Miscellaneous Mixed Waste Treatment Process

Prior to receiving waste in Tank F18, the heel must be acidified until it contains at least 0.3 M nitric acid in order to keep plutonium and uranium nitrates from precipitating. Keeping these compounds in suspension is necessary to allow for representative sampling for nuclear material accountability and to prevent a criticality concern.

Once the heel has been acidified, wastes can be received in Tank F18. Samples of miscellaneous wastes are taken when the level in Tank F18 reaches 3,500 to 4,000 gallons. Appropriate amounts of sodium hydroxide and sodium nitrite are added if the contents of TK-F18 do not have to be reworked back into the process. The tank is agitated for an hour prior to resampling to ensure that the pH is above 12 and the sodium nitrite concentration exceeds 0.011 M. If necessary, additional caustic or nitrite are added to meet corrosion specifications prior to transferring to Tank Farms.

Miscellaneous Headend Waste Treatment Process

As discussed earlier, Tanks U3 and U4 are used interchangeably to treat miscellaneous wastes received from the headend of PUREX. The Tank U3/U4 treatment process is identical, regardless of the tank being used.

Tank U3/U4 is sampled when the tank has received approximately 7,000 gallons of miscellaneous wastes. Appropriate amounts of sodium hydroxide and sodium nitrite are added to Tank U3/U4 based on sample results. The tank is agitated for an hour prior to resampling to ensure that the pH is above 12 and the sodium nitrite concentration exceeds 0.011 M. Additional caustic and nitrite are added, as required, prior to transferring to Tank Farms.

Headend Ammonia Waste Treatment Process

Current Treatment Process

ASF waste from the headend decladding process is jetted to Tank F12 prior to being transferred to Tank G7 on a semi-continuous basis for treatment. Within Tank G7, the ASF waste is treated to meet Tank Farm specifications by adding sodium hydroxide and sodium nitrite. The treated ASF waste is sampled and tested to ensure that the pH is greater than 12 and that the sodium nitrite levels are within Tank Farm specifications. The treated waste is then transferred to Tank Farms for storage.

Off-gases from Tank G7 and Tank F12 are vented to concentrator F11 where the steam is condensed in the F11-2 condenser to remove residual ammonia. Tower spray water is also used to scrub ammonia if the concentration of ammonia in the off-gases is excessive. The scrubbed gases are discharged from the ammonia stack.

Proposed Ammonia Treatment Process

The ammonia scrubber water with the absorbed ammonia is accumulated in Catch Tanks A3-4, B3-4 and C3-4 for the three dissolver off-gas streams and in Catch Tank E3-2 for the declad waste treatment. The ammoniacal solution from all four catch tanks will be transferred to accumulation Tank F4. After the ammoniacal solution from Tank F4 is neutralized with nitric acid to a pH around 5 in Tank G6A, it will be transferred to the F11 concentrator. The ammoniacal solution accumulated in Tank F4 is classified as a dangerous waste since it occasionally contains ammonium hydroxide concentrations above 1 wt%. After neutralization with nitric acid, the ammoniacal solution is no longer a dangerous waste since the ammonium hydroxide has been converted to ammonium nitrate.

Tank G6A will be approximately 1,100-gallons in size and will have three compartments. It will be located in the PUREX sample gallery. The tank is being designed to efficiently mix and accurately monitor pH adjustments. ASF waste will enter each mixing chamber at the bottom and exit via a rectangular weir at the top. Nitric acid will be injected near the bottom of each chamber directly below the mixers to facilitate complete mixing. The pH will be monitored at each weir and the final outlet so that the solution pH can be adjusted to between 5 and 7. Each chamber will be equipped with: 1) process feed solution flow control, measurement and recording, 2) radiation and temperature measurement, and 3) pH recording and alarm systems.

When the ammonia destruction system comes on line, G-Cell will provide secondary containment for Tank G6A via a floor drain in the sampling gallery. Any spills or leaks from Tank G6A collected in the G-Cell sump will be transferred to Tank F18, sampled, treated and transferred to Tank Farms.

The neutralized ASF solution will overflow from Tank G6A to concentrator F11 located in F Cell in the PUREX canyon. The concentrator consists of several sections: the left and right tube bundles, the disengaging section tower, and the condenser. The tube bundles heat the solution and form a thermosiphon current through the disengaging section. The condenser is fitted over the central tower to condense the off-gases.

The ammonium nitrate solution will be concentrated in the F11 concentrator. The vapor is scrubbed in the F11 tower, condensed in the F11 condenser and transferred to the LERF as ammonia scrubber distillate (ASD). Ammonia evolution is greatly suppressed in the ammonium nitrate solution as compared to ammonia evolution from ammonium hydroxide solution because of the reduced vapor pressure. Therefore, the ASD going to the LERF will contain very little ammonia and will not be a dangerous waste.

The concentrated ammonium nitrate from the F11 bottoms will overflow to Tank F12 from where it will be transferred batchwise to Tank G7. In Tank G7, nitrite and on occasion, nitric acid for pH control, will be added and the solution heated to destroy the ammonia (convert the ammonia to nitrogen and water). Once the ammonia concentration has been reduced to around 0.005 M, sodium hydroxide will be added to raise the pH above 12 before transferring the waste solution to Tank Farms.

The ammonia destruction system planned to treat ASF waste will provide additional benefits by reducing the toxicity of ASF wastes and reducing the volume of dangerous waste that must be stored in Tank Farms. Wastes that remain dangerous after treatment are transferred to Tank Farms.

II. Comparison with State Treatment by Generator Criteria

The criteria established by Ecology in TIM No. 86-3, as presented in Page 1 of this attachment, were reviewed with respect to treatment processes occurring in Tanks E5, F15, F16, F18, G6A, G7, U3, U4, and E-F11. The following is a discussion of how these PUREX treatment tank processes satisfies each of Ecology's criteria.

A. Inherent Risk of the Treatment Process.

The treatments conducted in PUREX treatment tanks are accomplished through remote operation and are therefore a low risk treatment processes. Waste treatment processes at PUREX are primarily simple acid/base reactions and the addition of sodium nitrite to meet Tank Farm specifications. Once operational, the ammonia destruction process occurring in Tanks G6A and G7 will simply remove water and ammonia, thus reducing the volume and toxicity of the waste.

The principal risk associated with the treatment of wastes in the PUREX tanks is radiation from the radioactive isotopes. Operators performing waste treatment are physically separated from the treatment tanks by thick concrete walls which effectively eliminates exposure to personnel during normal operations.

Off-gases generated from Tanks F15, F16, F18, U3 and U4 during waste treatment operations are passed through the canyon off-gas handling system prior to being discharged out the main stack. The canyon off-gas handling system includes a condenser (condensates are recycled into the process) and a multiple stage High Efficiency Particulate Filter (HEPA) to remove radionuclides and particulates. Off-gases are monitored for nitrogen oxides as well as radionuclides prior to being discharged.

Off-gases generated in Tank E5 are routed to the E Cell ammonia scrubber and then through a HEPA filter prior to being discharged from the ammonia stack.

Off-gases generated from Tanks F12 and G7 and Concentrator F11 in the Ammonia Destruction System will have a dedicated vent system which will exhaust to the exhaust tunnel. The off-gases are filtered prior to being discharged. Tank F4 off-gases will be vented out the ammonia stack after passing through a HEPA filter. Off-gases from Tank G6A will be discharged to the canyon, filtered using multiple filters and exhausted out the main stack.

B. Waste Toxicity.

Most of the wastes treated in PUREX treatment tanks are dangerous primarily due to their corrosive nature. The wastes exhibit toxic properties due to the presence of inorganic nitrates, nitrites, fluorides, and hydroxides, and are EP Toxic mainly due to trace amounts of Cr or Cd.

ASF waste received in Tank G6A is toxic primarily to aquatic organisms due to the ammonia (ammonium hydroxide) content. In addition, the ammonia concentration in the ASF waste are infrequently high enough to be designated as toxic. As a comparison to the high ammonia content of 1.4 percent in the ASF, household ammonia is approximately 30 percent ammonia.

Potentially toxic compounds that may also be present in PUREX wastes in minute concentrations would not contribute to the toxicity of the wastes and are not being treated at PUREX.

C. Risk and Probability of Release.

The principal avenues of release from PUREX treatment tanks would be to the air. Off-gases are scrubbed to remove ammonia, passed through absorbers to remove nitrogen oxides, and filtered to remove particulates. In addition, the type of off-gases produced during waste treatment are the same as those produced when processing and are relatively insignificant in volume in comparison to the process off-gases. Therefore, off-gases generated and discharged during waste treatment do not pose an additional risk to human health or the environment.

All activities in the PUREX canyon, including spill response, are accomplished remotely. Thus, there is no potential for human contact with the wastes in the containment system. Additionally, cell containment areas and spill collection, detection and transfer systems are designed to preclude waste release to the environment.

Spills resulting from Tank G6A would flow to a floor drain located in the sampling gallery and into the canyon. During a spill event from Tank G6A, there could be a potential for human contact with the waste to individuals located in the sampling gallery. The likelihood of such a release is remote because of the tanks design.

D. Relative Benefit to the Environment.

Treatment of the wastes accumulated in PUREX treatment tanks renders those wastes amenable for storage in double shell tanks at Tank Farms. After the ammonia destruction process is activated, treatment of wastes in the F11 Ammonia Destruction System will remove toxic ammonia and reduce the volume of waste that must be stored. This is consistent with state and federal waste minimization requirements.

If treatment was not performed, the wastes could not be stored in double shell tanks and alternative methods of management would need to be considered. In the case of the Ammonia Destruction System, without treatment, the volume of waste that would need to be managed as dangerous would be greatly increased. Alternative storage options do not exist at this time.

III. Compliance with Generator Accumulation Requirements.

The following information presents the measures taken toward meeting the applicable generator accumulation requirements set forth in WAC 173-303-200(1) and ensuring compliance for the treatment processes conducted in the PUREX tank systems.

General Requirements

A. Transfer of Dangerous Wastes to a Permitted Facility Within Ninety Days of Generation, WAC 173-303-200(1)(a)

Wastes generated at PUREX are treated on a batch or semi-batch basis. Treatment processes normally occur within a few days of generation and, in all cases, dangerous wastes are never accumulated in excess of 90 days prior to treatment. Treated dangerous wastes are sent to Tank Farms immediately after they are treated. Thus, the dangerous waste never accumulates in vessels for more than 90 days.

B. Labeling, WAC 173-303-200(1)(d)

PUREX personnel do not have access to canyon cells due to the high radiological concerns. The general public never has access to PUREX unless they have specific business in the plant, receive permission and clearances from WHC, and are constantly escorted by a PUREX employee. Access to PUREX is strictly controlled by a sophisticated security system at all times. Even Hanford Site personnel must have special authorization to enter the PUREX Facility. PUREX personnel must have specific authorization and training to enter areas where treatment tanks are located.

Activities and procedures at PUREX clearly identify the contents of PUREX treatment tanks and personnel are trained accordingly. Federal Atomic Energy Act labeling requirements are currently satisfied at PUREX.

The purpose of labeling requirements is to warn the public and employees of the hazards associated with the wastes and to alert emergency personnel as to the hazards associated with the wastes. Since the public does not have access to the treatment tanks and PUREX personnel, including emergency personnel, are familiar with the hazards associated with the wastes in PUREX treatment tanks, the intent of the labeling requirements are being met. In addition, access to the PUREX canyon is not allowed when wastes are in the cells and systems are set up to handle emergencies remotely.

U Cell is accessible to PUREX personnel and chemical hazard labels have been placed on the access door leading to Tanks U3 and U4. Similarly, Tank G6A will be accessible in the sampling gallery and a dangerous waste label will be placed on or near the tank in plain view of gallery personnel.

C. Personnel Training, WAC 173-303-330

A personnel training plan has been prepared and implemented. General dangerous waste training is accomplished within the first six months of employment. Additional facility specific training and hazardous waste training is provided to those who could come into contact with dangerous wastes. In addition, extensive training on the operation of PUREX treatment tanks is provided in an operator certification program which is renewed every two years. Training relative to ammonia destruction will be incorporated into the PUREX training plan prior to starting the planned treatment system.

The training records for facility personnel are maintained and updated regularly, and are available at 3200 George Washington Way, Richland, Washington. Computer "soft copies" of employee training are available from the PUREX Training Officer. The training program has been upgraded to insure that emergency coordinators are intimately familiar with the contingency plan as it relates to PUREX treatment tanks.

D. Preparedness and Prevention, WAC 173-303-340

Emergency equipment such as fire extinguishers, spill kits, and respirators are located throughout the PUREX Facility. However, due to the remote nature of the tankage and the radiological concerns, this emergency equipment would not be used in the event of an emergency involving PUREX treatment tanks located in the canyon. Spill equipment, consisting of a sump and sump detection and transfer system, is available in the event of a spill or leak

from Tanks U3 and U4. In addition, spill control equipment will be readily available in the sampling gallery in the event of a leak from Tank G6A.

Leak detection devices are present in all PUREX treatment tank containment area sumps. Spillage within the cells is collected in sumps and routed remotely to Tank F18 or Tank U3/U4 for treatment and discharge to Tank Farms.

All cells in PUREX are equipped with heat sensors and fire deluge systems. In addition, a foam suppression system is located in G Cell. The foam suppression system is automatically activated in the event of a fire. It can also be manually activated from the P&O gallery. Fire deluge systems are manually activated from the P&O gallery.

An internal phone and paging system (PAX) is located throughout the PUREX Facility. The canyon crane operator maintains communications via a hand held radio, a telephone, and a PAX phone.

Arrangement and mutual aid agreements have been made with off-site emergency response agencies. These arrangements are documented in a Memorandum of Understanding.

E. Contingency Plan and Emergency Procedures, WAC 173-303-350

An overall Hanford Site emergency plan exists and addresses emergencies that may occur at the Hanford Site. In addition, a contingency plan has been prepared to specifically address PUREX treatment tanks. The new treatment tank, Tank G6A, and ammonia destruction system will be included in the PUREX contingency plan. The Hanford Site emergency plan and the PUREX treatment tanks contingency plan are available and maintained at the PUREX Facility. The PUREX treatment tanks contingency plan will be amended as needed to ensure it is kept current and accurate.

F. Emergencies, WAC 173-303-360

The appropriate procedures, as described in the Hanford Site emergency plan and in the PUREX treatment tanks contingency plan will be followed in the event of emergencies. Emergencies associated with PUREX treatment tanks that require implementation of the Hanford Site emergency plan or the PUREX treatment tanks contingency plan will be reported as soon as they are detected to appropriate state and/or local agencies who have response roles as required by state or federal regulations. Follow-up written reports will be submitted via the Department of Energy, Richland Operations Office to Ecology within fifteen days after the occurrence of a reportable situation.

Requirements for Tank Systems

G. Applicability, WAC 173-303-640(1)

The requirements of WAC 173-303-640 apply to the accumulation and treatment of dangerous wastes in tanks by generators; except that, WAC 173-303-640(8)(c) does not apply.

Tank G6A is considered a new tank system as defined in WAC 173-303-040. Thus, the requirements of WAC 173-303-640 applicable to new tank systems or components are relevant to Tank G6A.

Tanks E5, F15, F16, F18, G7, U3, U4, and F11 concentrator, including their components, are existing tank systems as defined in WAC 173-303-040. Thus, the requirements of WAC 173-303-640 applicable only to new tank systems or components are not relevant to the these dangerous waste treatment tanks.

WAC 173-303-640(2), "Assessment of existing tank system's integrity," requires that an assessment of Tanks E5, F15, F16, F18, G7, U3, U4, and E-F11 be conducted by January 12, 1990. Negotiations of corrective action schedules for dangerous waste tank systems are currently underway with Ecology. Included in these negotiations will be a schedule for conducting tank integrity assessments.

WAC 173-303-640(3), "Design and installation requirements for new tank systems," applies to Tank G6A.

WAC 173-303-640(4), "Containment and detection of releases," will not be applicable to the Tanks E5, F15, F16, F18, G7, U3, U4, and E-F11 containment systems until January 12, 1991. This section of the regulations applies to the new tank system, Tank G6A.

H. Integrity Assessment, WAC 173-303-640(2)

A tank system integrity assessment for existing PUREX treatment tanks will be performed and will be certified by an independent, qualified, registered professional engineer. The assessment of the integrity of existing PUREX treatment tank systems will be based on existing structural configuration, design, construction, materials, and other information. A schedule for periodic assessment will be developed and will be implemented.

The integrity assessment for existing tank systems will not include physical inspections of the PUREX treatment tank systems. Due to the radioactive nature of the dangerous wastes treated in the tank, the level of worker radiation exposure that could occur while conducting leak tests and/or physical inspections would be inconsistent with the Federal Atomic Energy Act and ALARA goals.

To date, there is no evidence of integrity failure for PUREX treatment tank systems. In addition, a secondary containment system is in place (See Section III.J., below) in the event that leaks do develop. The integrity assessment for existing treatment tank systems will be available at the PUREX Facility. It will represent the best available assessment, consistent with protection and safety of Hanford personnel and the environment.

I. Design and Installation of New Tank Systems or Components, WAC 73-303-640(3)

A tank assessment will be completed on Tank G6A prior to placing the tank into service. This assessment will include:

- A written assessment, reviewed and certified by an independent, qualified registered professional engineer, attesting to the tank systems structural integrity and that the system is acceptable for receiving and treating the ASF waste;
- Design standards used to construct the tank;
- Dangerous waste characteristics of the ASF waste; and
- A foundation support adequacy evaluation.

A schedule will be developed for periodic integrity assessments throughout the life of Tank G6A. This schedule will be based on the results of past integrity assessments, tank age, construction materials, waste characteristics, and the radioactive constituents in the tank.

Strict procedures will be followed during installation of the tank system to ensure the tank is not damaged. Tank G6A system installation will be inspected by an independent, qualified, registered professional engineer in accordance with WAC 173-303-640(3)(c) prior to placing the tank into service.

Tank G6A and associated ancillary equipment will be tested to insure tightness prior to placing the tank into use. In addition, ancillary equipment will be adequately supported to prevent damage. Adequate corrosion protection will be provided for the tank system based on a corrosion analysis.

All professional engineer certifications and other documentation relevant to the design, construction, and installation of Tank G6A system will be kept on file at PUREX.

J. Containment and Detection of Releases, WAC 173-303-640(4)

Tanks E5, F15, F16, F18, G7, and E-F11 are located within the PUREX canyon cells. Ancillary equipment, such as piping, is located in the hot pipe trench. These structures provide secondary containment. Tanks U3 and U4 and associated piping are located in U Cell which provides secondary containment.

U and F Cells contain low pH wastes that may not be compatible with the concrete containment areas. The floors of the canyon cells and hot pipe trench are constructed of a minimum of 5.5 feet of reinforced concrete. To reduce the potential for unacceptable corrosion due to acids, all canyon cell floors at PUREX have six inches of concrete lining overlying the 5.5-foot-thick containment structure. After exiting the PUREX Facility, secondary containment is provided for piping by a concrete trench that extends to the 241-A-151 diversion box.

U Cell has a concrete containment area that is 1.5 feet thick. It is sealed with Amercoat 55, an acid resistant paint.

Tank G6A will be located in the sample gallery which drains to G Cell and will provide secondary containment for Tank G6A. A spill from the tank system would be readily visible to gallery personnel. In addition, G Cell sump has a leak detection system. Leaks to G Cell from Tank G6A will be jetted to Tank F18. In addition, concrete on the sample gallery floor is sealed with an acid resistant protective coating (Amercoat) designed to prevent wastes from impregnating the concrete. The capacity of the G Cell containment system exceeds the design capacity of Tank G6A. All canyon containment cell floors have sumps to collect leaks or spills. Each sump is equipped with a leak detection system. Sump accumulations are jetted to Tank F18.

K. General Operation, WAC 173-303-640(5)

Dangerous wastes and treatment reagents are not placed in PUREX treatment tanks if they could cause the tank to leak, rupture, or otherwise fail. Spillage and overflows are prevented by continuous on-line instrumentation monitoring of the tank liquid levels during each operational shift.

The levels in PUREX treatment tanks are controlled so as not to exceed their operational design capacities. Labeling of PUREX treatment tanks is in accordance with Section III.B., above. Treatment processes are operated to prevent the uncontrolled generation and release of emissions to the air. (See Section II.C. above).

L. Inspections, WAC 173-303-640(6) and 173-303-320(1), (2)(a), (b), and (d), and (3)

A written inspection plan and schedule (General Surveillance Procedure) for PUREX Facility has been prepared and implemented. Inspections of PUREX treatment tank systems addresses monitoring devices for the tanks and secondary containment systems. Due to the radioactive nature of the dangerous wastes treated in PUREX treatment tanks, physical observation of the dangerous waste tank systems would be inconsistent with the Federal Atomic Energy Act and ALARA goals.

Inspection of directly observable equipment (e.g., monitoring devices) is performed daily, while the physical portions of the tank systems cannot be inspected daily. Inspection of the physical portions of the PUREX treatment tank systems are addressed in the inspection plan and schedule.

M. Response to Releases, WAC 173-303-640(7).

If a leak or spill from PUREX treatment tanks is detected, the flow or addition of dangerous wastes and/or treatment reagents to the tank will be stopped. If necessary to prevent continued releases, the tank will be emptied. The cause of the leak or spill will be determined. Appropriate measures will be taken to correct the cause of the leak or spill before the PUREX treatment tank system is reintroduced to service.

Releases to secondary containment systems are removed usually within a 24-hour period for treatment in Tanks F18 or U3/U4, depending on the source. Major repairs required to vessels, as a result of a spill or leak from PUREX treatment tanks, will be certified to the Department of Ecology by an independent, qualified, registered professional engineer.

If releases to the environment are detected as a result of a spill or leak from PUREX treatment tanks, such releases will be contained. Environmental releases, if they occur, will be removed and their impacts on the environment will be mitigated. Releases to the environment in excess of applicable Reportable Quantities (RQs) will be reported to Ecology within 24 hours of detection. The National Response Center will be notified in accordance with 40 CFR Part 302. Any 24-hour report will be followed by a written report on the release from PUREX to Ecology via DOE-RL.

N. Closure and Post-Closure Care, WAC 173-303-640(8)

At closure, dangerous wastes and contaminated equipment and structures (including underlying materials contaminated with dangerous wastes or dangerous waste constituents) will either be removed from PUREX treatment tanks and the surrounding area, decontaminated, or stabilized and closed as a landfill.

Closure of PUREX treatment tanks and area will be performed in a manner that will: minimize the need for further maintenance; control, minimize, or eliminate post-closure releases that could threaten human health or the environment; achieve the removal and decontamination criteria of WAC 173-303-610(2)(b); and be consistent with the requirements of the Federal Atomic Energy Act and ALARA goals.

O. Special Requirements, WAC 173-303-640(9) and (10)

Potentially incompatible wastes and materials (i.e., acids and bases) are managed in PUREX treatment tanks. Commingling of acids and bases is conducted in a manner that prevents uncontrolled reactions from occurring. Treatment processes in the tanks are conducted to prevent, or control, the introduction and generation of ignitible and reactive wastes and materials.

The interiors of PUREX treatment tanks are compatible with all dangerous wastes and treatment reagents managed in the tanks.

IV. Waste Analysis

A. TK-E5 WASTE MANAGEMENT UNIT

1. TK-E5 Waste Characterization

The purpose of the waste characterization analysis is to properly designate the solid waste. This designation will determine whether the waste will be managed as an EHW (extremely hazardous waste) or as a DW (dangerous waste).

a. Theoretical Waste Characterization

Process information for the cladding removal waste (CRW) collected in TK-E5 is analyzed in this section to characterize and determine each dangerous waste component based on process information. Current sample data will be presented in the next section. The CRW will be designated using the sample data waste characterization as the primary information source for each component of the waste and the theoretical waste characterization as the secondary information source. The theoretical waste characterization data used in the waste designation will be included in the analysis as a means to complete the designation process.

Theoretical waste characterizations for the three types of CRW were developed using process knowledge that the following chemicals are used in the cladding removal process:

Chemical Name	Composition (weight percent)	Specific Gravity
AFAN - Ammonium Fluoride/ Ammonia Nitrate solution	37% ammonium fluoride 7% ammonium nitrate	1.126
Ferric Nitrate	99.8% ferric nitrate	1.684
Sodium Hydroxide	50% sodium hydroxide	1.53
Potassium Hydroxide	45% potassium hydroxide	1.39
REN - Rare Earth Nitrate	6.25% neodymium nitrate 18.75% lanthanum nitrate	1.51
Sodium Nitrite	99.9% sodium nitrite	2.168

Theoretical waste characterizations were calculated based on the above chemicals using the assumptions and information listed below:

- The PUREX Flowsheet flowrates and chemical compositions or current flowrates and chemical compositions, which ever matched the present process condition best, were used to determine the major chemical components in the waste.

- All impurities or trace quantity chemicals listed in the Essential Material Specifications for each chemical were assumed to be contained in the waste also.

- The PUREX Flowsheet value for each waste batch was used to calculate the trace chemical components in the waste.

- The impurity or trace chemical component concentration in each waste was calculated by multiplying the amount of raw chemical entering the process to its specific concentration and then dividing by the amount of waste leaving the process.

- Corrosion in the Headend dissolvers and the solvent extraction process were also considered in the waste analysis. Approximately 87 percent of the corrosion products (mainly nickel and iron) sampled in TK-F15 are a result of stainless steel (304 L) corrosion in the solvent extraction process. The corrosion products, in the solvent extraction process, are produced in three process concentrators which are continuously boiling nitric acid solutions. The high temperatures and high nitric acid concentration attack and slowly dissolve the stainless steel concentrator surfaces in contact with the nitric acid solution producing Cr, Fe and Ni corrosion products in the high level waste stream.

The remaining 13 percent of the corrosion products come from the Headend dissolver process during uranium dissolution with nitric acid. The boiling solution of nitric acid attacks the stainless steel similar to the acid concentrators but over a shorter period of time resulting in less overall corrosion. Approximately 88 percent of the corrosion on the Headend dissolvers takes place during the declad reaction and 12 percent during the dissolution portion of the process. Therefore, a significant amount of iron, nickel, and chromium corrosion products should be found in the decladding waste. Furthermore, 75 percent of the iron and nickel compounds or 10 percent of the total corrosion products are attributed to nickel and iron impurities contained in the fuel elements and not to corrosion. The remaining three percent is due to corrosion in the dissolvers during dissolution.

A significant amount of iron, nickel, and chromium corrosion products will be found in the NZAW; approximately 7,959 mg/L (liter) iron, 2,130 mg/L chromium, and 1,121 mg/L nickel. And approximately 143 mg/L iron, 36 mg/L chromium, and 20 mg/L nickel should be found in the decladding waste solutions. Estimates of the corrosion products are reflected in the theoretical waste characterization tables.

- Standard deviations for theoretical waste characterization analysis were based on Process Engineering experience. Since, the process can vary significantly from day to day without effecting the operation of the plant, large deviations are possible. Therefore, 15 to 50% standard deviations in the major chemical components would be expected and have been estimated accordingly.

  The standard deviation of trace elements in the waste stream will be estimated significantly higher (50 to 100%). This is based on the Essential Materials Specification assuming the maximum concentration (or worst case scenario) for each trace element and knowing little about the impurity levels in the raw chemical or in the waste. This analysis has made an attempt to look at these impurities to determine if any known impurity such as chromium could significantly change how the waste is designated and therefore managed.

- All components listed in the tables are either known compounds or listed as ions. Each compound may react during the neutralization process to form precipitated compounds such as hydroxides which are generally insoluble. Therefore, until more information on these

ions can be determined, the waste characterization analysis will list them as ions and not chemical compounds.

Theoretical Neutralized Declad Waste Data

Chemical	Mean Concentration	Standard Deviation
$ZrO_2 \cdot 2H_2O$	0.32 M	0.05 M
NaF	2.20 M	0.40 M
$NaNO_3$	0.06 M	0.02 M
NH_4OH	0.80 M	0.40 M
NaOH	0.88 M	0.45 M
$NaNO_2$	0.016 M	0.005 M
Al	5 ppm	5 ppm
Ba	10 ppm	5 ppm
Ca	10 ppm	10 ppm
Ce	5 ppm	5 ppm
Cl	300 ppm	150 ppm
Cr	50 ppm	25 ppm
Fe	100 ppm	50 ppm
La	100 ppm	50 ppm
Mg	5 ppm	5 ppm
Nd	25 ppm	25 ppm
Ni	25 ppm	10 ppm
Sr	5 ppm	5 ppm
Pu	0.27 ppm	0.27 ppm
U	404 ppm	202 ppm
pH	13.9	0.5
Volume (batch)	4443 gal	500 gal
SpG	1.09	0.02
Temperature	45°C	5°C

Theoretical Spent Metathesis Waste Data

Chemical	Mean Concentration	Standard Deviation
KOH	1.91 M	0.7 M
KF	0.81 M	0.4 M
$NaNO_2$	0.013 M	0.01 M
Ca	10 ppm	10 ppm
KCl	2500 ppm	1250 ppm
NaCl	500 ppm	250 ppm
Sr	5 ppm	5 ppm
U	Trace	
Pu	Trace	
pH	14.0	0.5
Volume (batch)	1572 gal	500 gal
SpG	1.11	0.02
Temperature	45°C	5°C

Theoretical Metathesis Rinse Waste Data

Chemical	Mean Concentration	Standard Deviation
$ZrO_2 \cdot 2H_2O$	0.16 M	0.05 M
NaF	1.13 M	0.40 M
$NaNO_3$	0.02 M	0.02 M
NH_4OH	0.41 M	0.20 M
NaOH	0.42 M	0.20 M
$NaNO_2$	0.016 M	0.005 M
Al	5 ppm	5 ppm
Ba	5 ppm	5 ppm
Ca	10 ppm	10 ppm
Ce	5 ppm	5 ppm
Cl	160 ppm	80 ppm
Cr	25 ppm	15 ppm
Fe	65 ppm	35 ppm
La	100 ppm	50 ppm
Mg	5 ppm	5 ppm
Nd	25 ppm	10 ppm
Ni	20 ppm	10 ppm
Sr	5 ppm	5 ppm
Pu	0.13 ppm	0.13 ppm
U	207 ppm	103 ppm
pH	13.6	0.5
Volume (batch)	3892 gal	500 gal
SpG	1.05	0.02
Temperature	45°C	5°C

b. TK-E5 Sample Analysis Data

Sample data for decladding waste, metathesis waste and spent metathesis waste was collected over a 3 month period and are tabulated below.

Neutralized Declad Waste Sample Data
Data Taken 8-01-88 thru 10-20-88

Chemical	Mean Concentration		Standard Deviation	
NH_4OH	1.117	M	0.44	M
NaF*	2.092	M	0.63	M
Zr	42.130	g/L	32.53	g/L
Am	6.26E-07	g/L	2.08E-06	g/L
U	0.961	g/L	0.848	g/L
Pu	1.32E-04	g/L	1.68E-04	g/L
pH (Pre-Neut.)	8.34		1.16	
pH (Post Neut.)	Not Taken			

* Assumed compound based on F^- ion sample analysis

Spent Metathesis Waste Sample Data
Data Taken 8-01-88 thru 10-20-88

Chemical	Mean Concentration		Standard Deviation	
NH_4OH	0.086	M	0.0496	M
$NaNO_2$	0.0162	M	0.0001	M
NaF*	0.477	M	0.209	M
Zr	6.04	g/L	4.99	g/L
Am	3.71E-07	g/L	5.82E-07	g/L
U	0.093	g/L	0.193	g/L
Pu	0.028	g/L	0.107	g/L
pH	13.738		0.373	

* Assumed compound based on F^- ion sample analysis

Metathesis Rinse Waste Sample Data
Data Taken 8-01-88 thru 10-20-88

Chemical	Mean Concentration		Standard Deviation	
NH_4OH	0.505	M	0.396	M
$NaNO_2$	0.0155	M	0.0009	M
NaF*	0.869	M	0.842	M
Zr	13.42	g/L	10.23	g/L
Am	2.21E-07	g/L	3.66E-07	g/L
U	0.325	g/L	0.384	g/L
Pu	8.76E-05	g/L	1.68E-04	g/L
pH (Pre-Neut.)	8.044		0.937	
pH (Post Neut.)	13.298		0.405	

* Assumed compound based on F^- ion sample analysis

2. TK-E5 Waste Designation

a. Discarded Chemical Products

The first step for waste designation is comparing the waste to the "Discarded Chemical Products List", WAC 173-303-9903. Although the PUREX facility uses many chemicals to complete required analyses and process functions, chemicals are not discarded via the TK-E5 tank system. Therefore, the waste stream is not regulated as a Discarded Chemical Product.

b. Dangerous Waste Sources

The second category for waste designation is comparing the waste to the "Dangerous Waste Sources List," WAC 173-303-9904. All the chemical compounds tabulated in the previous section were compared to Dangerous Waste Sources List. None of the chemicals considered were contained on the list. Therefore, the waste is not regulated as a dangerous waste source.

c. Infectious Dangerous Waste

The third category for waste designation is "Infectious Dangerous Wastes," WAC 173-303-083. The TK-E5 waste stream does not use, treat, store, or dispose of any infectious dangerous waste. This category is not applicable to TK-E5.

d. Dangerous Waste Mixtures

The fourth category of waste designation is the "Dangerous Waste Mixtures," WAC 173-303-084. Tank E5 is known to have dangerous waste constituents listed in the EPA's Spill Table. All constituents in the tables listed in the previous section were compared to the EPA's Spill Tables to determine which constituents would be used in the equivalent concentration calculation. The average concentration from the sample data tabulated in the previous section was used as the primary source of information to calculate the equivalent concentrations. When sample data were available and constituents were missing from the equivalent concentration analysis, theoretical values from the first section were used so that a more complete waste designation could be derived. In order to designate the CRW wastes, the following assumption was made:

- Some of the chemical compounds used in the equivalent concentration were assumed compounds. This means that the laboratory analyses normally tests and reports positive (cation) or negative (anion) ions that are in solution rather than identifying the actual compound. Therefore, based on process knowledge and basic chemistry principles, the ions have been combined into a theoretical compound for designation purposes.

Below is the equivalent concentration calculations on the three CRW waste streams:

Decladding Waste - Dangerous Waste Mixtures

Compound	Toxic Category	Initial Conc.	Weight %	E. C. Conc.
NaF*	C	2.092 M	8.06	0.00806
$NaNO_3$	D	0.06 M	0.47	0.00005
NH_4OH*	C	1.117 M	3.59	0.00359
NaOH	C	0.88 M	3.23	0.00323
$NaNO_2$	B	0.016 M	0.10	0.00101

Total Equivalent Concentration = 0.01594
Batch Size = 40,390 lbs.

* Actual Sample Data used in the E. C. calculation.

Therefore, based on WAC 173-303-9906 Toxic Dangerous Waste Mixtures Graph, the decladding waste should be regulated as WT01, Extremely Hazardous Waste (EHW).

Spent Metathesis Waste - Dangerous Waste Mixtures

Compound	Toxic Category	Initial Conc.	Weight %	E.C. Conc.
KF *	C	0.477 M	2.47	0.00247
NH_4OH *	C	0.086 M	0.27	0.00027
KOH	C	1.91 M	9.55	0.00955
$NaNO_2$ *	B	0.016 M	0.0998	0.000998

Total Equivalent Concentration = 0.013288
Batch Size = 14,684 lbs.

* Actual Sample Data used in the E.C. calculation.

Therefore, based on WAC 173-303-9906 Toxic Dangerous Waste Mixtures Graph, the decladding waste should be regulated as WT01, Extremely Hazardous Waste (EHW).

Metathesis Rinse Waste - Dangerous Waste Mixtures

Compound	Toxic Category	Initial Conc.	Weight %	E.C. Conc.
NaF *	C	0.869 M	3.48	0.00348
$NaNO_3$	D	0.02 M	0.16	0.000016
NH_4OH *	C	0.505 M	1.68	0.00168
NaOH * ++	C	0.20 M	0.76	0.00076
$NaNO_2$ *	B	0.0155M	0.10	0.00102

Total Equivalent Concentration = 0.006956
Batch Size = 35,380 lbs.

* Actual Sample Data used in the E.C. calculation.
++ NaOH concentration based on pH sample data.

Therefore, based on WAC 173-303-9906 Toxic Dangerous Waste Mixtures Graph, the decladding waste should be regulated as WT02, Dangerous Waste (DW).

e. Dangerous Waste Characteristics

The fifth category of dangerous waste is the dangerous waste characteristics from WAC 173-303-090. The four characteristic types of waste are ignitability, corrosivity, reactivity and EP toxicity.

Ignitability: The CRW waste streams do not meet any of the definitions of ignitability under WAC 173-303-090. Therefore, CRW is not regulated as an ignitable waste.

Corrosivity: The pH of all three CRW wastes are greater than 12.5 and therefore will be regulated as corrosive dangerous waste (D002).

Reactivity: The three CRW waste streams do not meet any of the definitions of reactivity defined in WAC 173-303-090. The wastes are not unstable, do not react violently with water or form explosive mixtures or generate toxic gases, and are not explosive in any manner and, therefore, should not be regulated under this requirement.

EP Toxicity: The decladding waste and the metathesis rise waste contain EP toxic Ba and Cr metals. Barium is in trace quantities (<40 ppm) from the sodium hydroxide raw material, but is not in sufficient concentration to be regulated as EP Toxic dangerous waste solely on barium in these waste streams. Chromium is present in both waste streams as a corrosion product from fluoride attack on the stainless steel vessel during the decladding reaction. The chromium concentration

has been estimated to be 50 to 100 parts per million (ppm) and should be regulated as a EP-Toxic dangerous waste in the decladding (D007 EHW) and metathesis rinse waste (D007 DW) streams.

3. Waste Designation Summary and Conclusions

The three CRW wastes are designated according to WAC 173-303-070 in the following manner:

Decladding Waste is designated as EHW (WT01) under the dangerous waste mixtures regulation and is designated D002 for characteristic of corrosivity and D007 for chromium characteristic of EP toxicity.

Spent Metathesis Waste is designated as EHW (WT01) under the dangerous waste mixtures regulation and is designated D002 for characteristic of corrosivity.

Metathesis Rinse Waste is designated as DW (WT02) under the dangerous waste mixtures regulation and is designated D002 for characteristic of corrosivity and D007 for chromium characteristic of EP toxicity.

B. TK-F15 AND TK-F16 WASTE MANAGEMENT UNITS

1. TK-F15/F16 Waste Characterization

The purpose of the waste characterization analysis is to properly designate the solid waste. This designate will determine whether the waste will be managed as an EHW (extremely hazardous waste) or as a DW (dangerous waste).

a. Theoretical Waste Characterization

A theoretical waste characterization for NZAW was developed by using process knowledge that the following chemicals are used in the neutralized zirconium acid waste process:

Chemical Name	Composition (weight percent)	Specific Gravity
Aluminum Nitrate	50% aluminum nitrate	1.26
Antifoam	10% silicone emulsion	1.0
Cadmium Nitrate	50% cadmium nitrate	1.8
Ferrous Sulfamate	50% ferrous sulfamate	1.44
Hydrazine	35% hydrazine solution	1.04
Hydroxylamine Nitrate	18% hydroxylamine nitrate	1.09
Nitric Acid	57% nitric acid	1.35
Oxalic Acid (solid)	99.5% oxalic acid	1.9
Rare Earth Nitrate (REN)	18.75% lanthanum nitrate 6.25% neodymium nitrate	1.51
Sodium Fluoride (solid)	95% sodium fluoride	2.56
Sodium Hydroxide	50% sodium hydroxide	1.53
Sodium Nitrite	99.9% sodium nitrite	2.168
Sugar (Sucrose)	99% white granulated sugar	1.58
Sulfamic Acid (solid)	97% sulfamic acid	2.126

The waste characterization for the NZAW was calculated on the above chemicals using the assumptions and information listed in Section IV.A.1.a. In addition, the uranium fuel is known to contain several metallic impurities. The impurity levels have been published in UNI-M-90 (N Reactor Updated Safety Analysis Report - January 1979), which gives maximum impurity levels shown below:

Uranium Fuel Impurities

Element	ppm	Element	ppm
Fe	300 - 400	H	2 max.
Al	700 - 900	Mg	25 max.
C	365 - 735	Mn	25 max.
Be	10 max.	Ni	100 max.
B	2.25 max.	N	75 max.
Cd	0.25 max.	Si	125 max.
Cr	65 max.	Zr	65 max.
Cu	75 max.		

Each impurity was assumed to be dissolved into the uranium nitrate solution and then be separated from the uranium nitrate via the HA column. The waste from the HA column becomes the NZAW and is treated in TK-F15 and TK-F16.

Neutralized Zirflex Acid Waste

Chemical	Mean Concentration	Standard Deviation
$Al(OH)_4$	0.682 M	0.25 M
NaOH (free)	1.0 M	0.3 M
$NaNO_3$	4.10 M	1.0 M
NaF	0.25 M	0.15 M
Na_2SO_4	0.178 M	0.06 M
$Cd(NO_3)_2$	0.021 M	0.021 M
$Fe(OH)_3$	0.224 M	0.10 M
Ba	20 ppm	20 ppm
C	residue	n/a
Ca	40 ppm	20 ppm
Cl (NaCl)	900 ppm	300 ppm
Cr	0.031 M	0.015 M
La	900 ppm	400 ppm
Mg	5 ppm	3 ppm
Mn	10 ppm	5 ppm
$NaNO_2$	10 ppm	10 ppm
$Ni(OH)_3$	0.015 M	0.008 M
NH_4OH	100 ppm	50 ppm
Nd	300 ppm	100 ppm
Organics(est.) *	50 ppm	50 ppm
P	20 ppm	10 ppm
Pb	50 ppm	50 ppm
Si	200 ppm	50 ppm
Sn	5 ppm	5 ppm
Sr	5 ppm	5 ppm
U	900 ppm	300 ppm
Pu	5 ppm	5 ppm
Np	10 ppm	5 ppm
pH	14.0	0.1
Volume (batch)	3400 gal	500 gal
SpG	1.25	0.5
Temperature	45°C	5°C
Solids	17 vol%	5 vol%

* This constitutes a theoretical maximum based on contaminant limits in essential materials, degradation products, and process organics [tri-butyl phosphate (TBP) and normal paraffin hydrocarbons (NPH)].

b. TK-F15/F16 Sample Analysis Data

Sample data for NZAW was collected over a 3 month period and is tabulated below.

Neutralized Zirflex Acid Waste Sample Data
Data Taken 8-01-88 thru 10-20-88

TK-F15

Chemical	Mean Concentration		Standard Deviation	
$Al(OH)_4$*	0.649	M	0.335	M
$Fe(OH)_3$*	0.890	M	0.870	M
$Ni(OH)_3$*	0.0183	M	0.0117	M
HNO_3*	1.97	M	1.43	M
NaF	0.104	M	0.071	M
Np	4.96E-04	g/L	3.13E-04	g/L
U	0.152	g/L	0.237	g/L
Pu	3.03E-03	g/L	1.80E-03	g/L

TK-F16

OH^-(Free)	1.038	M	1.980	M
pH (Pre-Neut.)	8.10		4.37	
pH (Post Neut.)	13.49		0.57	

* Assumed compound based on a specific ion analysis

The above table represents the waste characterization information for the waste stream based on actual data taken routinely for TK-F15/F16. The data shown in the tables above also illustrate the type of information necessary to control, treat and manage NZAW in TK-F15/F16. The sample data will be compared and used with the theoretical waste characterization data to develop the rational to properly designate and manage NZAW in TK-F15/F16.

2. TK-F15/F16 Waste Designation

a. Discarded Chemical Products

The first step for waste designation is comparing the waste to the "Discarded Chemical Products List", WAC 173-303-9903. The PUREX facility uses many chemicals to complete required analyses and process functions. When chemicals reach their expiration date, they are recertified for use or labpacked out of the facility as waste. No pure chemical products are discarded to the TK-F15/F16 tank system and administrative controls, such as personnel training and procedural limitations, ensure that accidental discharges are avoided. No chemicals appearing on the "Discarded Chemical Products List," WAC 173-303-9903, are discarded to the tank system.

b. Dangerous Waste Sources

The second category for waste designation is comparing the waste to the "Dangerous Waste Sources List," WAC 173-303-9904. All the chemical compounds tabulated in the previous section were compared to Dangerous Waste Sources List. None of the chemicals considered were contained on the list. Therefore, the waste is not regulated as a dangerous waste source.

c. Infectious Dangerous Waste

The third category for waste designation is "Infectious Dangerous Wastes," WAC 173-303-083. The TK-F15/F16 waste stream does not use, treat, store, or dispose of any infectious dangerous waste. Therefore, this category is not applicable to TK-F15/F16.

d. Dangerous Waste Mixtures

The fourth category of waste designation is the "Dangerous Waste Mixtures," WAC 173-303-084. Tanks F15/F16 are known to have dangerous waste constituents listed in the EPA's Spill Table. All constituents in the tables listed in the previous section were compared to the EPA's Spill Tables to determine which constituents would be used in the equivalent concentration calculation. The average concentration from the sample data tabulated in the previous section was used as the primary source of information to calculate the equivalent concentrations. When sample data were not available and constituents were missing from the equivalent concentration analysis, theoretical values from the first section were used so that a more complete waste designation could be derived. In order to designate the NZAW wastes, the following assumption was made:

- Some of the chemical compounds used in the equivalent concentration were assumed compounds. This means that the laboratory analyses normally tests and reports positive (cation) or negative (anion) ions that are in solution rather than identifying the actual compound. Therefore, based on process knowledge and basic chemistry principles, the ions have been combined into a theoretical compound for designation purposes.

Below is the equivalent concentration calculations on the three CRW waste streams:

Neutralized Zirflex Acid Waste - Dangerous Waste Mixtures

Compound	Toxic Category	Initial Conc.	Weight %	E.C. Conc.
NaF *	C	0.104 M	0.35	0.00035
$NaNO_3$	D	4.10 M	27.88	0.00279
NH_4OH	C	100 ppm	0.01	0.00001
NaOH *	C	1.038 M	3.32	0.00332
$NaNO_2$	B	10 ppm	0.001	0.00001
$Ni(OH)_3$ *	C	0.0183M	0.16	0.00016
Acetone +	D		8.40E-06	8.40E-10
Arsenic Trioxide	B		2.10E-06	2.10E-08
Butanol +	D		1.33E-04	1.33E-08
Cyclohexane	C		3.82E-03	4.82E-06
Methyl Ethyl Ketone +	D		2.80E-06	2.80E-10
Hydrazine	X		1.93E-03	1.93E-03
Potassium Cyanide	A		7.00E-07	7.00E-08
Sodium Hydroxide	C		1.40E-05	1.40E-08

Total Equivalent Concentration = 0.0085846
Batch Size = 35,445 lbs.

* Actual Sample Data used in the E.C. calculation.
\+ Estimates based on contaminant limits in essential materials and degradation products.

Therefore, based on WAC 173-303-9906 Toxic Dangerous Waste Mixtures Graph, the decladding waste should be regulated as WT02, Dangerous Waste (DW).

e. Dangerous Waste Characteristics

The fifth category of dangerous waste is the dangerous waste characteristics from WAC 173-303-090. The four characteristic types of waste are ignitability, corrosivity, reactivity and EP toxicity.

Ignitability: Spent analytical solutions containing minute amounts of chemicals which, when in a solid form, exhibit the characteristic of ignitability are transferred to the process for recovery of uranium and plutonium. However, the waste stream is not an oxidizer as defined in 49 CFR 173.151 and will not yield oxygen readily to support combustion of organic matter. Therefore, the waste stream is not regulated as an ignitable waste.

Corrosivity: The pH of the NZAW waste is less than 2 when entering TK-F15/F16 and greater than 12.5 after the pH

adjustment and, therefore, will be regulated as corrosive dangerous waste (D002).

Reactivity: Spent analytical solutions containing small amounts of chemicals exhibiting the characteristic of reactivity are transferred to the process for recovery of uranium and plutonium. Process solutions containing chemicals exhibiting the characteristic of reactivity may enter into the NZAW from the HA column. The amount of reactive materials will be very small and the effect in the waste negligible. Therefore, the waste from TK-F15/F16 will not be designated as waste exhibiting the characteristic of reactivity under WAC 173-303-090.

EP Toxicity: The NZAW waste potentially contains EP toxic As, Ba, Cd, Cr, Pb, Hg and Ag metal ions. Below is a brief discussion of each metal ion to estimate concentration level for waste characterization.

Arsenic, mercury and silver are present in trace and sporadic quantities (<5 ppm) from the PUREX laboratory. Of these, only mercury may be in sufficient quantities to be regulated as EP Toxic dangerous waste in NZAW. Therefore, the NZAW will be designated and managed as an EP toxic dangerous waste (D009).

Barium is in trace quantities (<40 ppm) from the sodium hydroxide raw material and from spent analytical solutions. Barium is not present in sufficient concentration to be regulated as EP Toxic dangerous waste in NZAW.

Cadmium is present as cadmium nitrate solution from the recycling of plutonium nitrate from TK-L11. The concentration levels of cadmium ion could be around 500 to 5000 ppm Cd depending on the mode of PUREX solvent extraction operation. Therefore, cadmium has been estimated to be in sufficient concentration to be regulated as an EP Toxic extremely hazardous waste (D006-EHW) in NZAW.

Chromium is present in the waste stream as a corrosion product from boiling nitric acid attack on the stainless steel vessels from the Headend dissolution process and from three process concentrators throughout the solvent extraction process. The chromium concentration has been estimated to be 1000 to 2000 ppm and should be regulated as a EP-Toxic extremely hazardous waste (D007-EHW) in NZAW.

Lead may be contained in two raw materials (aluminum nitrate and sulfamic acid) used throughout the PUREX process, and is in small quantities from spent analytical solutions. The lead concentration in the NZAW waste stream may be in

sufficient quantity (~20 ppm) to be regulated as a EP Toxic material dangerous waste (D008) in NZAW.

3. Waste Designation Summary and Conclusion

The NZAW waste is designated for regulation as EHW (WT01) under the dangerous waste mixtures regulation show above. In addition, NZAW is designated as characteristic of corrosivity (D002), and characteristic of EP toxicity for cadmium (D006), chromium (D007), lead (D008), and mercury (D009).

C. TK-F18 WASTE MANAGEMENT UNIT

1. TK-F18 Waste Characterization

The purpose of the waste characterization analysis is to properly designate the solid waste. This designation will determine whether the waste will be managed as an EHW (extremely hazardous waste) or as a DW (dangerous waste).

a. Theoretical Waste Characterization

Process information for miscellaneous waste collected in TK-F18 is analyzed in this section to characterize and determine each dangerous waste component based on process information. The miscellaneous waste will be designated using the sample data waste characterization as the primary information source for each component of the waste and the theoretical waste characterization as the secondary information source. The theoretical waste characterization data used in the waste designation will be included in the analysis as a means to complete the designation process. Below is a description of the waste characterization and tables showing the waste components.

A theoretical waste characterization for TK-F18 miscellaneous waste was developed using process knowledge and assuming that the following chemicals are used in the miscellaneous waste process from the section on TK-E5 Waste Characterization and the section on TK-F15/F16 Waste Characterization.

Chemical Name	Composition (weight percent)	Specific Gravity
AFAN - Ammonium Fluoride/ Ammonia Nitrate Solution	37% ammonium fluoride 7% ammonium nitrate	1.126
Aluminum Nitrate	50% aluminum nitrate	1.26
Antifoam	10% silicone emulsion	1.0
Cadmium Nitrate	50% cadmium nitrate	1.8
Ferric Nitrate	99.8% ferric nitrate	1.684
Ferrous Sulfamate	50% ferrous sulfamate	1.44
Hydrazine	35% hydrazine solution	1.04
Hydroxylamine Nitrate	18% hydroxylamine nitrate	1.09
Nitric Acid	57% nitric acid	1.35
Oxalic Acid (solid)	99.5% oxalic acid	1.9
Potassium Hydroxide	45% potassium hydroxide	1.39
Rare Earth Nitrate (REN)	18.75% lanthanum nitrate 6.25% neodymium nitrate	1.51
Sodium Fluoride (solid)	95% sodium fluoride	2.56
Sodium Hydroxide	50% sodium hydroxide	1.53
Sodium Nitrite	99.9% sodium nitrite	2.168
Sugar (Sucrose)	99% white granulated sugar	1.58
Sulfamic Acid (solid)	97% sulfamic acid	2.126

The waste characterization for TK-F18 was calculated based on the combined chemicals used in both the CRW (See tables in Section IV.A.) and the NZAW (See tables in Section IV.B.) waste characterization analyses. From process experience, it is assumed that any chemicals from headend operations and/or solvent extraction operations could be spilled into a sump and be transferred to TK-F18. All other waste sources transferred to TK-F18 contain mostly water, low level radioactivity and possibly dilute nitric acid.

Miscellaneous Waste TK-F18

Solvent Extraction Process

Chemical	Mean Concentration	Standard Deviation
NaOH (free)	<0.1 M	0.05 M
$NaNO_2$	0.011 M	0.05 M

Headend Process

NaOH (free)	<0.1 M	0.05 M
$NaNO_2$	0.011 M	0.05 M

Miscellaneous Waste TK-F18 (contd)

Chemical	Mean Concentration	Standard Deviation
Overall Waste		
U	Variable	
Pu	Trace	
Np	Trace	
pH	12.5	0.5
Volume (batch)	4000 gal	500 gal
SpG	1.02	0.02
Temperature	45°C	5°C

b. TK-F18 Sample Analysis Data

Sample data for TK-F18 was collected over a 3 month period and is tabulated below.

Miscellaneous Waste TK-F18 Sample Data

Chemical	Mean Concentration		Standard Deviation	
$NaNO_2$	0.0235	M	0.0093	M
Np	1.40E-03	g/L	1.28E-03	g/L
U	2.723	g/L	5.532	g/L
Pu	0.0140	g/L	0.0289	g/L
pH(Pre-Neut)	2.30		3.12	
pH(Post Neut)	12.19		0.62	

The data shown in the tables above illustrate the type of information necessary to control, treat and manage miscellaneous waste from TK-F18. The sample data will be compared and used with the theoretical chemical lists (developed from the CRW and NZAW waste designation rationale) to develop the rationale to properly designate and manage miscellaneous waste in TK-F18.

2. TK-F18 Waste Designation

a. Discarded Chemical Products

The first step for waste designation is comparing the waste to the "Discarded Chemical Products List", WAC 173-303-9903. The PUREX facility uses many chemicals to complete required analyses and process functions. No pure chemical products are discarded to the TK-F18 tank system and administrative controls, such as personnel training and procedural limitations, ensure that accidental discharges are avoided.

No chemicals appearing on the "Discarded Chemical Products List," WAC 173-303-9903, are discarded to the TK-F18 system.

b. Dangerous Waste Sources

The second category for waste designation is comparing the waste to the "Dangerous Waste Sources List," WAC 173-303-9904. All the chemical compounds tabulated in the previous section were compared to Dangerous Waste Sources List. None of the chemicals considered were contained on the WAC 173-303-9904 list. Therefore, the waste is not regulated as a dangerous waste source.

c. Infectious Dangerous Waste

The third category for waste designation is "Infectious Dangerous Wastes," WAC 173-303-083. The TK-F18 waste stream does not use, treat, store, or dispose of any infectious dangerous waste. Therefore, this category is not applicable to TK-F18.

d. Dangerous Waste Mixtures

The fourth category of waste designation is the "Dangerous Waste Mixtures," WAC 173-303-084. Tank F18 is known to have dangerous waste constituents listed in the EPA's Spill Table. All constituents in the tables listed in the previous section were compared to the EPA's Spill Tables to determine which constituents would be used in the equivalent concentration calculation. The average concentration from the sample data tabulated in the previous section was used as the primary source of information to calculate the equivalent concentrations. When sample data were not available and constituents were missing from the equivalent concentration analysis, theoretical values from the first section were used so that a more complete waste designation could be derived. In order to designate the miscellaneous waste stream, the following assumption was made:

- Some of the chemical compounds used in the equivalent concentration were assumed compounds. This means that the laboratory analyses normally tests and reports positive (cation) or negative (anion) ions that are in solution rather than identifying the actual compound. Therefore, based on process knowledge and basic chemistry principles, the ions have been combined into a theoretical compound for designation purposes.

Below is the equivalent concentration calculations completed on the TK-F18 waste stream:

Miscellaneous Waste - Dangerous Waste Mixtures

Compound	Toxic Category	Initial Conc.		Weight %	E.C. Conc.
KF	C	0.477	M	2.47	0.00247
KOH	C	1.91	M	9.55	0.00955
NaF	C	2.092	M	8.06	0.00806
$NaNO_3$	D	4.10	M	27.88	0.00279
NH_4OH	C	1.117	M	3.59	0.00359
NaOH *	C	0.015	M	0.059	0.000059
$NaNO_2$ *	B	0.0235	M	0.159	0.00159
$Ni(OH)_3$	C	0.0183	M	0.16	0.00016
Acetone+	D			8.40E-06	8.40E-10
Arsenic Trioxide	B			2.10E-06	2.10E-08
Butanol+	D			1.33E-04	1.33E-08
Methyl Ethyl Ketone+	D			2.80E-06	2.80E-10
Hydrazine	X			1.93E-03	1.93E-03
Potassium Cyanide	A			7.00E-07	7.00E-08
Sodium Hydroxide	C			1.40E-05	1.40E-08
Total Equivalent Concentration				=	0.030199

Batch Size = 34,027 lbs.

* Actual Sample Data used in the E.C. calculation.

\+ Estimates based on contamination limits in essential materials and degradation products.

Therefore, based on WAC 173-303-9906 Toxic Dangerous Waste Mixtures Graph, the decladding waste is regulated as WT01, Extremely Hazardous Waste (EHW). The concentrations used in this analysis would be the maximum concentrations of each component and would most likely be significantly lower due to dilution wastes generated by many of the other waste sources.

e. Dangerous Waste Characteristics

The fifth category of dangerous waste is the dangerous waste characteristics from WAC 173-303-090. The four characteristic types of waste are ignitability, corrosivity, reactivity and EP toxicity.

Ignitability: Spent analytical solutions containing minute amounts of chemicals which, when in a solid form, exhibit the characteristic of ignitability are transferred to the process for recovery of uranium and plutonium. However, the waste stream is not an oxidizer as defined in 49 CFR 173.151 and will not yield oxygen readily to support combustion of organic matter. Therefore, the waste stream is not regulated as an ignitable waste.

Corrosivity: The pH of TK-F18 waste can be less than 2 and is frequently greater than 12.5 after the pH adjustment and therefore will be regulated as corrosive dangerous waste (D002).

Reactivity: Spent analytical solutions containing small amounts of chemicals exhibiting the characteristic of reactivity are transferred to the process for recovery of uranium and plutonium. The amount of reactive materials will be very small and the effect in the waste negligible. Therefore, the waste from TK-F18 will not be designated as waste exhibiting the characteristic of reactivity under WAC 173-303-090.

EP Toxicity: Tank F18 waste potentially contains EP toxic As, Ba, Cd, Cr, Pb, Hg and Ag metal ions since any material from the CRW or NZAW wastes streams may be spilled into the canyon sump systems. Below is a brief discussion of each metal ion to estimate concentration level for waste characterization.

Arsenic, mercury and silver are present in trace and sporadic quantities (<5 ppm) from the PUREX laboratory. Of these, only mercury may be in sufficient quantities to be regulated as EP Toxic dangerous waste in NZAW. Therefore, the NZAW will be designated and managed as an EP toxic dangerous waste (D009).

Barium is in trace quantities (<40 ppm) from the sodium hydroxide raw material and from spent analytical solutions. Barium is not present in sufficient concentration to be regulated as EP Toxic dangerous waste in TK-F18.

Cadmium is present as cadmium nitrate solution from the recycling of plutonium nitrate from TK-L11 (NZAW stream). The concentration levels of cadmium ion could be around 500 to 5000 ppm Cd in the process stream depending on the mode of PUREX solvent extraction operation. Therefore, cadmium will be regulated as an EP Toxic extremely hazardous waste (D006-EHW) in TK-F18.

Chromium is present in the waste stream as a corrosion product from boiling nitric acid attack on the stainless steel vessels from the Headend dissolution process and from three process concentrators throughout the solvent extraction process. Chromium concentration has been estimated to be 1000 to 2000 ppm in some streams and will be regulated as a EP-Toxic extremely hazardous waste (D007) in TK-F18.

Lead may be contained in two raw materials (aluminum nitrate and sulfamic acid) which are used throughout the PUREX process. The lead concentration in the NZAW waste stream may

be in sufficient quantity (~20 ppm) to be regulated as a EP Toxic dangerous waste (D008-DW) in TK-F18.

3. Waste Designation Summary and Conclusions

TK-F18 waste will be regulated as EHW (WT01) under the dangerous waste mixtures regulation shown above. In addition, TK-F18 waste will be designated as characteristic of corrosivity (D002) and characteristic of EP toxicity for cadmium (D006), chromium (D007), lead (D008), and mercury (D009).

D. TK-U3 AND TK-U4 WASTE MANAGEMENT UNITS

1. TK-U3 AND TK-U4 Waste Characterization

The purpose of the waste characterization analysis is to properly designate the solid waste. This designation will determine whether the waste will be managed as an EHW (extremely hazardous waste) or as a DW (dangerous waste).

a. Theoretical Waste Characterization

Process information for the miscellaneous waste collected in TK-U3/U4 is analyzed in this section to characterize and determine each dangerous waste component based on process information. The miscellaneous waste will be designated using the sample data waste characterization as the primary information source for each component of the waste and the theoretical waste characterization as the secondary information source. The theoretical waste characterization data used in the waste designation will be included in the analysis only as a means to complete the designation process. Below is a description of the waste characterization and tables showing the components.

A theoretical waste characterization for TK-U3 and TK-U4 miscellaneous waste was developed using process knowledge that the following chemicals are used in this part of PUREX process.

Chemical Name	Composition (weight percent)	Specific Gravity
Nitric Acid	57% nitric acid	1.35
Aluminum Nitrate	50% aluminum nitrate	1.26
Sodium Hydroxide	50% sodium hydroxide	1.53

The waste characterization for TK-U3 and TK-U4 was calculated based on the chemicals used in PUREX process listed above and based on process knowledge on U-Cell operations and the Acid

Fractionator system. All other waste sources listed in this section contain mostly water, low level radioactivity and possibly dilute nitric acid.

The overall difficulties in the TK-U3 and TK-U4 waste characterization involves estimating waste quantities and concentrations of each component of the waste. Each type of waste is generated sporadically, consequently, amounts of each waste and the individual component concentrations are difficult to estimate. Therefore, the theoretical waste characterization for TK-U3 and TK-U4 lists the components that are routinely present in the waste stream.

Miscellaneous Waste in TK-U3/U4

Chemical	Mean Concentration		Standard Deviation	
NaOH (free)	<0.1	M	0.05	M
$NaNO_2$	0.011	M	0.05	M
U	1000	ppm	500	ppm
Pu	1	ppm	1	ppm
pH	12.0		0.6	
Volume (batch)	7000	gal	500	gal
SpG	1.02		0.02	
Temperature	45°C		5°C	

b. TK-U3/U4 Sample Analysis Data

Sample data for TK-U3/U4 were collected over a 3 month period and are tabulated below.

Miscellaneous Waste TK-U3/U4 Sample Data

Chemical	Mean Concentration		Standard Deviation	
$NaNO_2$	1.54E-02	M	7.10E-03	M
U	4.78E-03	g/L	8.29E-03	g/L
Pu	1.10E-06	g/L	6.00E-07	g/L
pH(Pre-Neut)	4.51		2.77	
pH(Post Neut)	12.47		0.54	

The table above represents the waste characterization information for the waste stream based on actual data taken routinely for TK-U3 and TK-U4. The data shown in the table also illustrate the type of information necessary to control, treat and manage miscellaneous waste from TK-U3 and TK-U4. The sample data will be compared and used with the theoretical chemical waste characterization to develop the rationale to properly designate and manage miscellaneous waste in TK-U3 and TK-U4.

2. TK-U3/U4 Waste Designation

a. Discarded Chemical Products

The first step for waste designation is comparing the waste to the "Discarded Chemical Products List", WAC 173-303-9903. The PUREX facility uses many chemicals to complete required analyses and process functions. When chemicals reach their expiration date, they are recertified for use or labpacked out of the facility as waste. No pure chemical products are discarded to the TK-U3/U4 tank system and administrative controls, such as personnel training and procedural limitations, ensure that accidental discharges are avoided. No chemicals appearing on the "Discarded Chemical Products List," WAC 173-303-9903, are discarded in the TK-U3/U4 system.

b. Dangerous Waste Sources

The second category for waste designation is comparing the waste to the "Dangerous Waste Sources List," WAC 173-303-9904. All the chemical compounds tabulated in the previous section were compared to Dangerous Waste Sources List. None of the chemicals considered were contained on the WAC 173-303-9904 list. Therefore, the waste is not regulated as a dangerous waste source.

c. Infectious Dangerous Waste

The third category for waste designation is "Infectious Dangerous Wastes," WAC 173-303-083. The TK-U3/U4 waste stream does not use, treat, store, or dispose of any infectious dangerous waste. Therefore, this category is not applicable to TK-U3/U4.

d. Dangerous Waste Mixtures

The fourth category of waste designation is the "Dangerous Waste Mixtures," WAC 173-303-084. Tanks U3/U4 are known to have dangerous waste constituents listed in the EPA's Spill Table. All constituents in the tables listed in the previous section were compared to the EPA's Spill Tables to determine which constituents would be used in the equivalent concentration calculation. The average concentration from the sample data tabulated in the previous section were used as the primary source of information to calculate the equivalent concentrations. When sample data were not available and major constituents were missing from the equivalent concentration analysis, theoretical values from the first section were used so that a more complete waste designation could be derived. In order to designate the miscellaneous waste stream, the following assumption was made:

- Some of the chemical compounds used in the equivalent concentration were assumed compounds. This means that the laboratory analyses normally tests and reports positive (cation) or negative (anion) ions that are in solution rather than identifying the actual compound. Therefore, based on process knowledge and basic chemistry principles, the ions have been combined into a theoretical compound for designation purposes.

Below is the equivalent concentration calculations completed on the TK-U3/U4 waste streams:

Miscellaneous Waste - Dangerous Waste Mixtures

Compound	Toxic Category	Initial Conc.	Weight %	E.C. Conc.
NaOH *	C	0.030 M	0.118	0.000118
$NaNO_2$ *	B	0.0154 M	0.104	0.00104

Total Equivalent Concentration = 0.001158
Batch Size = 59,548 lbs.

* Actual sample data used in the E.C. calculation.

Therefore, based on WAC 173-303-9906 Toxic Dangerous Waste Mixtures Graph, the decladding waste is regulated as WT02, Dangerous Waste (DW).

e. Dangerous Waste Characteristics

The fifth category of dangerous waste is the dangerous waste characteristics from WAC 173-303-090. The four characteristic types of waste are ignitability, corrosivity, reactivity and EP toxicity.

Ignitability: Spent analytical solutions containing minute amounts of chemicals which, when in a solid form, exhibit the characteristic of ignitability are transferred to the process for recovery of uranium and plutonium. However, the waste stream is not an oxidizer as defined in 49 CFR 173.151 and will not yield oxygen readily to support combustion of organic matter. Therefore, the waste stream is not regulated as an ignitable waste.

Corrosivity: The pH of TK-U3 and TK-U4 waste before treatment can have be less than 2 and is frequently greater than 12.5 after treatment. Therefore, the waste will be regulated as corrosive dangerous waste (D002).

Reactivity: Spent analytical solutions containing small amounts of chemicals exhibiting the characteristic of reactivity are transferred to the process for recovery of uranium and plutonium. The amount of reactive materials will be very small and the effect in the waste negligible. Therefore, the waste from TK-U3/U4 will not be designated as waste exhibiting the characteristic of reactivity under WAC 173-303-090.

EP Toxicity: Tanks U3 and U4 waste potentially contains EP toxic Ba, Cr, and Pb metal ions present in the raw materials used in the process. In addition, spent analytical solution containing minute amounts of As, Ba, Cd, Hg, Se, Ag can be transferred to Tanks U3 and U4 for disposal to Tank Farms. Below is a brief discussion of each metal ion to estimate concentration level for waste characterization.

The barium is in trace quantities (<40 ppm) from the sodium hydroxide raw material and from spent analytical solutions. Barium is not present in sufficient concentration to be regulated as EP Toxic material.

The chromium may be present in the waste stream as a corrosion product from boiling nitric acid attack on the stainless steel vacuum fractionator reboiler. The nitric acid attack on the vacuum fractionator reboiler will not be as severe as the nitric acid attack on the waste concentrators in solvent extraction because of the lower boiling temperature of the nitric acid under vacuum. The acid fractionator was installed in 1956 and has never been replaced, verifying the low corrosion rate during operation of the vacuum fractionator. The recovered nitric acid is then processed in U-Cell where nitric acid may leak or spill to the U-Cell sumps. The sumps are transferred to U3 or U4 as waste for treatment and transferring to storage. Chromium concentrations have been estimated to be less than 500 ppm. Tanks U3 and U4 will be regulated EP Toxic dangerous waste (D007-DW).

Lead may be contained in aluminum nitrate used in the nitric acid absorber T-F5, to complex fluorides in the recovered nitric acid to inhibit corrosion in the vacuum fractionator. The lead concentration in the TK-U3/U4 waste stream may be in sufficient quantity (~20 ppm) to be regulated as EP Toxic material dangerous waste. Tanks U3 and U4 will be regulated as EP-Toxic dangerous waste (D008).

Arsenic, mercury and silver are present in trace and sporadic quantities (<5 ppm) from the PUREX laboratory. Of these, only mercury may be in sufficient quantities to be regulated as EP Toxic dangerous waste in TK-U3/U4. Therefore, the TK-U3/U4 waste will be designated and managed as an EP toxic dangerous waste (D009).

3. Waste Designation Summary and Conclusions

Tanks U3 and U4 waste will be regulated as DW (WT02) under the dangerous waste mixtures regulation shown above. In addition, Tanks U3 and U4 are designated as characteristic of corrosivity (D002) and characteristic of EP toxicity for cadmium (D006), chromium (D007), lead (D008), and mercury (D009).

E. TK-G7 AND E-F11 WASTE MANAGEMENT UNITS

1. TK-G6A, TK-G7 and E-F11 Waste Characterization

The purpose of the waste characterization analysis is to properly designate the solid waste. This designation will determine whether the waste will be managed as an EHW (extremely hazardous waste) or as a DW (dangerous waste).

a. Theoretical Waste Characterization

Waste designation information for the future ammonia destruction process which will generate ammonia scrubber distillate (ASD) waste and ammonia scrubber waste (ASW) from TK-G7 are based on laboratory studies adapted to the ammonia destruction for TK-G6A, TK-G7 and E-F11 and past information collected from the old ASF treatment process in TK-G7. The above tanks are analyzed in this section to characterize and determine each dangerous waste component based on all available process information. Actual sample data will be presented in this section from past TK-G7 analyses. The ammonia scrubber waste before neutralization in TK-G6A will be designated using (past TK-G7) sample information as the primary information source for each component of the waste and the theoretical waste characterization as the secondary information source. The theoretical waste characterization data will be used to complete the designation process. Below is a description of the waste characterization and tables showing the components.

A theoretical waste characterization for the ammonia scrubber waste before ammonia destruction in TK-G7 and after neutralization were developed using process knowledge, laboratory information and assuming that the following chemicals are used in the ammonia scrubber process.

Chemical Name	Composition (weight percent)	Specific Gravity
AFAN - Ammonium Fluoride/ Ammonia Nitrate Solution	37% ammonium fluoride 7% ammonium nitrate	1.126
Sodium Nitrite	99.9% sodium nitrite	2.168
Sodium Hydroxide	50% sodium hydroxide	1.53
Nitric Acid	50% nitric acid	1.35

The waste characterization for TK-G7 (pre and post-neutralized ASW) was calculated based on the chemicals used in PUREX process listed above and based on laboratory studies on the ammonia destruction process.

The overall difficulties in TK-G7 waste characterization involves estimating waste quantities and concentrations of each component of the waste for the future process. The volume of ammonia scrubber waste varies considerably from batch to batch. The theoretical waste characterization for TK-G7 will list chemicals which are expected to contribute to the waste stream designation.

Theoretical ASW Characterization (TK-G7)

Chemical	Theoretical Conc.
$NaNO_3$	3.1 M
$NaNO_2$	0.69 M
NaOH	0.051 M
NH_3	0.062 M

Pre-Ammonia Destruction
Theoretical ASW Characterization (TK-G7)

Chemical	Theoretical Conc.
NH_4NO_3	9.0 M
HNO_3	0.015 M
NH_3	trace

A theoretical waste characterization for the ammonia scrubber distillate (ASD) waste was developed using process knowledge, ammonia destruction laboratory information and the same chemicals listed in the ASW waste characterization above.

Below is a theoretical waste characterization of the ASD developed using the same basic principles as the ASW theoretical waste characterization.

Theoretical ASD Characterization (E-F11)

Chemical	Theoretical Conc.
NH_4NO_3	trace
NH_4OH	0.005 M
NH_4F	trace
NH_4Cl	trace
pH	8.5-9

b. TK-G7 Sample Analysis Data (old ASF process)

Sample data for TK-G7 was collected over a 3 month period and is tabulated below and will be used for the pre-neutralization waste characterization in TK-F4/TK-G6A.

Similar to the theoretical waste characterization, many components are listed as ions. This is typical of the type of laboratory analyses required to control the process. Currently, the laboratories on site are not in a position to conduct full scale detailed chemical analyses on all waste streams. The radiation content of the waste stream is normally quite low and should not cause problems with the analytical equipment used in the laboratory or cause personnel exposure problems.

Miscellaneous Waste TK-G7 Sample Data

Chemical	Mean Concentration	Standard Deviation
$NaNO_2$	0.0392 M	0.0269 M
NH_4OH	0.0943 M	0.0934 M
F	2.64E-04 M	4.36E-04 M
OH^-	0.0229 M	0.0248 M
pH(Post Neut)	11.99	0.46

The above table represents the waste characterization information for the waste stream based on the actual data taken routinely for TK-G7 during the old ASF waste treatment process. The data shown in the tables above also illustrate the type of information necessary to control, treat and manage ammonia waste from TK-G7. The sample data will be compared and used with the theoretical chemical waste characterization to develop the rationale to properly designate and manage miscellaneous waste in TK-F4/TK-G6A.

2. ASW and ASD Waste Characterization

The purpose of the waste characterization analysis is to properly designate the solid waste. This designation will determine whether the waste will be managed as an EHW (extremely hazardous waste) or as a DW (dangerous waste).

a. Theoretical Waste Characterization

Process information for the ammonia scrubber feed and ammonia destruction process is analyzed in this section to characterize and determine each dangerous waste component for ASW and ASD based on process knowledge and laboratory knowledge. The ammonia wastes will be designated using the theoretical waste characterization as the primary information source. The past process knowledge will be used were ever possible to complete the designation process. Below is the waste designations for the ASW and ASD.

Waste Designation for ASW

a. Discarded Chemical Products

The first step for waste designation is comparing the waste to the "Discarded Chemical Products List", WAC 173-303-9903. Although the PUREX facility uses many chemicals to complete required analyses and process functions, there is no credible pathway to dispose of a chemical on the Discarded Chemical Products List via the waste stream. Therefore, the waste stream is not regulated as a Discarded Chemical Product.

b. Dangerous Waste Sources

The second category for waste designation is comparing the waste to the "Dangerous Waste Sources List," WAC 173-303-9904. All the chemical compounds tabulated in the previous section were compared to Dangerous Waste Sources List. None of the chemicals considered were contained on the WAC 173-303-9904 list. Therefore, the waste is not regulated as a dangerous waste source.

c. Infectious Dangerous Waste

The third category for waste designation is "Infectious Dangerous Wastes," WAC 173-303-083. The ASW waste stream does not use, treat, store, or dispose of any infectious dangerous waste. Therefore, this category is not applicable to this waste stream.

d. Dangerous Waste Mixtures

The fourth category of waste designation is the "Dangerous Waste Mixtures," WAC 173-303-084. The ASW waste stream is known to have dangerous waste constituents listed in the EPA's Spill Table. All constituents in the tables listed in the previous section were compared to the EPA's Spill Tables to determine which constituents would be used in the equivalent concentration calculation. The average concentration from the sample data tabulated in the previous

section was used as the primary source of information to calculate the equivalent concentrations. When sample data were not available and major constituents were missing from the equivalent concentration analysis, theoretical values were used so that a more complete waste designation could be derived. In order to designate the ASW waste stream, the following assumption was made:

- Some of the chemical compounds used in the equivalent concentration were assumed compounds. This means that the laboratory analyses normally tests and reports positive (cation) or negative (anion) ions that are in solution rather than identifying the actual compound. Therefore, based on process knowledge and basic chemistry principles, the ions have been combined into a theoretical compound for designation purposes.

Below is the equivalent concentration calculations completed on the ASW waste stream from TK-G7:

Miscellaneous Waste - Dangerous Waste Mixtures

Compound	Toxic Category	Initial Conc.	Weight %	E. C. Conc.
$NaNO_3$	D	3.1 M	23.95	0.002395
$NaNO_2$	B	0.79 M	4.96	0.0496
NaOH	C	0.051 M	0.186	0.000186
NH_3	B	0.062 M	0.096	0.00096

Total Equivalent Concentration = 0.053141
Batch Size = 73,400 lbs.

Assumes Density of 1.1 in TK-G7

Therefore, based on WAC 173-303-9906 Toxic Dangerous Waste Mixtures Graph, the ASW waste should be regulated as WT01, Extremely Hazardous Waste (EHW).

e. Dangerous Waste Characteristics

The fifth category of dangerous waste is the dangerous waste characteristics from WAC 173-303-090. The four characteristic types of waste are ignitability, corrosivity, reactivity and EP toxicity.

Ignitability: Tank G7 waste does not meet any of the characteristics of ignitability under WAC 173-303-090. Therefore, Tank G7 waste is not regulated as an ignitable waste.

Corrosivity: The pH of TK-G7 waste, after pH adjustment to meet Tank Farm corrosion specifications, is frequently greater than 12.5 and therefore will be regulated as corrosive dangerous waste (D002).

Reactivity: Tank G7 waste does not meet any of the definitions of reactivity defined in WAC 173-303-090. The waste is not unstable, does not react violently with water or form explosive mixtures or generate toxic gases, and is not explosive in any manner, and therefore, is not regulated under this requirement.

EP Toxicity: Although the ASW stream may contain minute quantities of EP Toxic metals, their concentration is expected to be well below the levels at which they would normally be designated as characteristic EP Toxic. Therefore, WAC 173-303-090(8) is not applicable to the ASW waste stream.

Waste Designation for ASD

a. Discarded Chemical Products

The first step for waste designation is comparing the waste to the "Discarded Chemical Products List", WAC 173-303-9903. Although the PUREX facility uses many chemicals to complete required analyses and process functions, there is no credible pathway to dispose of a chemical on the Discarded Chemical Products List via the waste stream. Therefore, the waste stream is not regulated as a Discarded Chemical Product.

b. Dangerous Waste Sources

The second category for waste designation is comparing the waste to the "Dangerous Waste Sources List," WAC 173-303-9904. All the chemical compounds tabulated in the previous section were compared to Dangerous Waste Sources List. None of the chemicals considered were contained on the WAC 173-303-9904 list. Therefore, the waste is not regulated as a dangerous waste source.

c. Infectious Dangerous Waste

The third category for waste designation is "Infectious Dangerous Wastes," WAC 173-303-083. The ASD waste stream does not use, treat, store, or dispose of any infectious dangerous waste. Therefore, this category is not applicable to this waste stream.

d. Dangerous Waste Mixtures

The fourth category of waste designation is the "Dangerous Waste Mixtures," WAC 173-303-084. The ASD waste stream is known to have dangerous waste constituents listed in the

EPA's Spill Table. All constituents in the tables listed in the previous section were compared to the EPA's Spill Tables to determine which constituents would be used in the equivalent concentration calculation. The average concentration from the sample data tabulated in the previous section was used as the primary source of information to calculate the equivalent concentrations. When sample data were not available and major constituents were missing from the equivalent concentration analysis, theoretical values from the first section were used so that a more complete waste designation could be derived. In order to designate the ASD waste stream, the following assumption was made:

- Some of the chemical compounds used in the equivalent concentration were assumed compounds. This means that the laboratory analyses normally tests and reports positive (cation) or negative (anion) ions that are in solution rather than identifying the actual compound. Therefore, based on process knowledge and basic chemistry principles, the ions have been combined into a theoretical compound for designation purposes.

Below is the equivalent concentration calculations completed on the ASD waste stream from E-F11:

Miscellaneous Waste - Dangerous Waste Mixtures

Compound	Toxic Category	Initial Conc.	Weight %	E. C. Conc.
NH_3 *	B	0.005 M	0.0085	0.000085

Total Equivalent Concentration = 0.000085
Batch Size = 50,000 gallons/Declad

* Assumes the ammonium hydroxide to be ammonia as a worst case basis.

Assumes Density of 1.0 in ASD

Therefore, based on WAC 173-303-9906 Toxic Dangerous Waste Mixtures Graph, the ASD is not regulated as Dangerous Waste (DW).

e. Dangerous Waste Characteristics

The fifth category of dangerous waste is the dangerous waste characteristics from WAC 173-303-090. The four characteristic types of waste are ignitability, corrosivity, reactivity and EP toxicity.

Ignitability: ASD does not exhibit the characteristic of ignitability as defined in WAC 173-303-090. Therefore, the ASD will not be regulated as ignitable waste.

Corrosivity: The pH of ASD waste is 8.5 to 9 and does not meet the definition of corrosive waste under WAC 173-303-090. Therefore, the ASD will be not regulated as corrosive dangerous waste.

Reactivity: ASD does not meet any of the definitions of reactivity defined in WAC 173-303-090. The waste is not unstable, does not react violently with water or form explosive mixtures or generate toxic gases, and is not explosive in any manner, and therefore, is not regulated under this requirement.

EP Toxicity: Although the ASD stream may contain minute quantities of EP Toxic metals, their concentration is expected to be well below the levels at which they would normally be designated as characteristic EP Toxic. Therefore, WAC 173-303-090(8) is not applicable to the ASD waste stream.

3. Waste Designation Summary and Conclusions

While actual performance data of the future ammonia destruction process are not available, the information used to designate this stream properly identifies the characteristics for appropriate waste management.

The ASW in TK-G7 is designated for regulation as EHW (WT01) under the dangerous waste mixtures regulation shown above and as characteristic of corrosivity (D002).

The ASD from E-F11 will not be designated as a Dangerous Waste (DW) under any section of the WAC 173-303. Therefore, the ASD is an unregulated waste.

ATTACHMENT C

Treatment by Generator Request
204-AR Waste Unloading Station

I. Treatment by Generator for the 204-AR Waste Unloading Station

A. Generator Waste Description

The 204-AR Waste Unloading Station receives waste from the 100, 300, and 400 areas for treatment and transfer to double shell tanks.

100-N Area Waste

The 100 area waste streams are non-dangerous radioactive waste.

- o 1310-N reactor decontamination solution is a mixture of phosphoric acid, diethylthiourea, and dissolved radioactive materials from decontamination of the reactors primary piping system. The material is neutralized (pH between 9 and 11 standard units) with sodium hydroxide at 100-N area prior to transfer to the 204-AR Waste Unloading Station. The decontamination process is only conducted every two to three years. Consideration is being given to using a different decontamination solution which will also result in a non-dangerous radioactive waste stream.

- o 107-N Regeneration waste is produced during periodic regeneration of the anion and cation resin columns used to purify the 105-N Fuel Storage Basin water. The columns are regenerated with a solution of concentrated sulfuric acid and sodium hydroxide. The pH is adjusted to between 7 and 10 standard units prior to transfer to the 204-AR building.

400 Area

The 400 area waste streams are non-dangerous radioactive waste.

- o Radioactive aqueous waste is generated at the Fast Flux Test Facility (FFTF) in conjunction with removal of residual sodium from reactor components. Approximately 6000 gallons per year of radioactive water is produced. The water is shipped to the Maintenance and Storage Facility (MASF).

- In addition to receiving radioactive liquid from FFTF, approximately 2000 gallons per year of dilute sodium hydroxide is generated at MASF in conjunction with equipment decontamination. Steam and high pressure water are used in the decontamination process. Once the Small Sodium Removal System is started the liquid waste generated is anticipated to increase significantly (6000 to 24000 gallons per year).

The future of FFTF and MASF is undetermined at this time. If the reactor is to commence permanent shutdown the amount and type of waste generated could vary greatly depending on the type of sodium disposal.

300 Area

Research and development facilities in the 300 area are the only source of mixed waste currently being shipped to the 204-AR building. Waste from the 300 area is temporarily accumulated in tanks at the 340 waste receiving facility. The 340 facility receives waste from numerous research laboratories via hard-piped drain lines; discharges are both continuous drain and one time only batch transfers. The facility also receives containerized waste which is transfered to the storage tanks. Because waste receipts vary on a day-to-day basis depending on the type, quantity and stage of numerous research projects; a single description of the waste would not be accurate for all waste receipts. Each individual waste stream is designated, in accordance with WAC 173-303 requirements, at the point of generation by laboratory personnel. The origninal designations are retained by the research laboratory and the 340 receiving facility also maintains a copy. The aggregate solutions, which are shipped to 204-AR, are not recharacterized except for radioactive shipping criteria.

An evaluation of prior waste designations has resulted in the identification of the waste codes listed below.

D001	D009
D002	D010
D004	D011
D005	WT01
D006	WT02
D007	WC02
D008	F003

While the waste codes WC01, WP01, WP02 and WP03 have not been identified in prior waste designations the potential for their generation may exist. All of the above waste codes are being considered in modifying the existing 204-AR part A Permit application.

In addition, the "300 Area Radioactive Liquid Waste System Facilities: Dangerous Waste Management Compliance Plan" has been developed. The plan was transmitted to Ecology on March 6, 1990. This document includes plans for a waste survey and compliance review. The purpose of the survey is to identify those waste streams that are radioactive mixed waste, non-radioactive dangerous waste and non-dangerous radioactive waste. To the extent possible the survey will try and predict wastes which may be generated in the future. The survey will allow waste handling practices for radioactive mixed waste and non-radioactive dangerous waste to be revaluated. Improvements in waste minimization, segregation and waste handling are expected.

B. Waste Treatment Process Description

The purpose of the treatment conducted at the 204-AR Waste Unloading Facility is to make the liquid wastes received at the facility amenable for storage in the double-shell tanks. In general, treatment consists of the in-line addition and mixing of sodium hydroxide and sodium nitrite to meet the double-shell tank (DST) specifications. The caustic and nitrite additions are done to inhibit corrosion in transfer lines and double-shell tanks.

The 204-AR Waste Unloading Facility is a two-story, structural steel, reinforced concrete building that receives and treats liquid wastes. The facility is divided into three primary sections:

1) The unloading area which houses the railroad tank car, pumps, valves, piping, a 1,500-gallon catch tank, the vault in which the catch tank resides, and ventilation exhaust duct work;

2) The mechanical equipment room which houses the process equipment including the chemical storage tanks, the motor control center, building heating, ventilation, and air conditioning equipment, and the air compressor; and

3) The personnel offices and facilities including the operations room, and a locker and change room.

Prior to treatment in the 204-AR Waste Unloading Facility a sample of the waste is taken and sent to an onsite laboratory. The analytical results are sent to the 204-AR Process Engineering group. From the results of the waste stream sampling, the volume and concentration of treatment reagents needed to meet the DST storage specifications are calculated. The calculated volumes of sodium hydroxide (pH adjustment) and sodium nitrite (corrosion inhibitor) are added to the liquid waste through ancillary piping injection ports installed in the waste transfer line. The sodium hydroxide and sodium nitrite treated waste solutions are then directed to the appropriate DST through the 241-A-A valve pit.

To ensure adequate mixing of the treatment reagents and the waste liquid, a STATFLO Motionless Mixer (in-line mixer described below) was installed in the transfer lines (located inside the 204-AR facility) in 1985.

The STATFLO Motionless Mixer consists of a four inch diameter, stainless steel piping assembly placed in line the suction line from the tank car. The mixture then passes two pH probes, and enters the pump which discharges to the 241-A-A valve pit. The mixer unit is a one-foot long pipe with internal baffles that cause the pipe contents to swirl as liquid proceeds through it. To verify adequate mixing and pH adjustment, two downstream, in-line, pH probes are constantly monitored during the treatment operations. The 204-AR Waste Unloading Facility procedures call for the pH of the final treated waste solution to range between 12.2 and 12.7, depending on which DST the solution will eventually be directed to.

Residual tank car precipitates are rinsed with a high pressure internal tank cleaner and flushed out of the tank car with approximately 1,000 gallons of clean water. Concentrated sodium nitrite solution is then added in-line and mixed through the use of the in-line mixer as the rinsate is being transferred to the 241-A-A valve pit and eventually to the appropriate double shell tank. The empty tank car is monitored for radiological dose rates, and, if required, cleaned externally with approximately 1000 gallons of clean water before being returned to the shipper for reloading.

The 204-AR waste unloading area, process and ancillary piping, are protected with secondary containment consisting of floor drains, and a catch tank housed in a concrete vault. The vault sump is lined with stainless steel. In addition, the vault and sump surrounding the catch tank has a leak detection device that activates alarms at three different locations if the liquid level exceeds one inch in depth. Administrative procedures will be in place requiring that this containment system be checked periodically for leakage, minimizing potential for undetected leakage from the drainage system.

Facility floors are sloped toward centrally located floor drains. Floor drains throughout the facility are directed to the catch tank located in the vault. The in-floor drain system is comprised of stainless steel. All drain line plumbing utilizes gravity-flow and is equipped with seal loops to prevent back-flow of undesirable gases.

The catch tank is a 1,500-gallon steel tank equipped with high and low level monitoring alarms. The vault is constructed of reinforced concrete with a stainless steel lined sump. The sump in the vault floor is equipped with automatic leak detection via a conductance probe and alarm. The sump also acts as a collection device for waste which may accumulate in the bottom of the vault. The amounts

of sodium hydroxide added are small, and the addition pumps are low capacity positive displacement type which precludes heat generation from the dilution of the sodium hydroxide solution.

II. Comparison with State Treatment by Generator Criteria

The criteria established by Ecology in TIM No. 86-3, as presented in page 1 of this attachment, were reviewed with respect to the 204-AR Waste Unloading Facility treatment process. Although the in-line STATFLO Motionless Mixer is not a tank by definition, this type of equipment would typically be considered part of a "tank system." The treatment procedures and overall processes involved are in compliance with 40 CFR 262.34 and Subpart J of Part 265 as described in section III. of this request. Following is a discussion of how the 204-AR treatment process satisfies each of Ecology's criteria.

A. Inherent Risk of the Treatment Process.

Treatment in the 204-AR Waste Unloading Facility is a low risk process. The major risk during treatment is the potential for generation of heat during the addition of the caustic solution to the wastes. However, the treatment and unloading process incorporates a dynamic mixing/transferring procedure at high flow rates and low pressure allowing generated heat to be dissipated quickly and transferred along with the treated waste.

Differential Thermal Analysis (DTA) is also performed on the waste prior to treatment to determine the presence of compounds which would cause exothermic reactions when the caustic and sodium nitrite solutions are added to the waste. Collected wastes are pumped directly to the 241-A-A valve pit for subsequent transfer to the DST. Other risks associated with treatment procedures, including gas or fume generation, are minimal in this type of process.

All treatment and transference is remotely accomplished, thereby reducing human contact with the waste. After the waste stream is treated and transferred to the appropriate DST, the transfer and chemical addition lines are flushed with clean water to prevent the buildup of precipitates or scale in the lines. Additional concerns include reduced flow rates or plugging and system leaks. In the case of plugging or reduced flow, the system is monitored constantly during treatment and the operators would immediately detect a decrease in system flow rate. The system would either be monitored further or corrective action procedures would be implemented dependent on the circumstances. In the case of system leaks, liquids are collected in a catch tank and cell sump for subsequent pumping through the 241-A-A valve pit into the receiving DST.

B. Waste Toxicity.

Wastes treated in the 204-AR facility are dangerous primarily due to their corrosive nature. The toxicity of such waste is typically low, and is attributable more to pH effects than to inherent toxicity of the wastes. Following aggregation of the 300 area wastes at the 340 complex the small quantities of inorganic chemicals utilized by laboratories would be undetectable in most instances.

C. Risk and Probability of Release.

The principle avenues of release from the 204-AR facility would be to the air and the secondary containment system in the treatment unit area. The air does not pose a risk because it is withdrawn and filtered prior to discharge to the atmosphere through High Efficiency Particulate Air (HEPA) filters. A filter management program is in place to maintain filter efficiency and detect failures of the filter system.

Releases to the cell containment system and sump immediately trigger sump monitoring alarms in the control room and the 242-A Evaporator building. The sump contents can be pumped through the 241-A-A valve pit to the receiving DST following completion of the solution treatment or before further treatment occurs. No potential exists for human or environmental contact with the wastes in the cell containment system or sump.

D. Relative Benefit to the Environment.

Treatment of wastes at the 204-AR Station makes the waste amenable for storage in the 200 East Area DST Farms. If treatment was not performed, the waste could not be stored in the DST and other methods of storage would need to be considered. Alternate storage options do not exist at this time.

III. Compliance with Generator Accumulation Requirements.

The following information presents the measures taken toward meeting the applicable generator accumulation requirements set forth in WAC 173-303-200(1), and ensuring compliance for the 204-AR Waste Unloading Facility and the treatment processes conducted in the facility.

General Requirements

A. Transfer of Dangerous Wastes to a Permitted Facility within Ninety Days of Generation, WAC 173-303-200(1)(a)

As discussed above in Section I.A., wastes that are received in 204-AR Waste Unloading Facility are treated upon receipt and are transferred immediately after treatment to the 200 East Area Tank

Farms. Thus, the wastes never accumulate in the 204-AR facility for more than ninety days after they are received.

B. Labeling, WAC 173-303-200(1)(d)

The tank cars and active portions of the facility are marked with labels identifying the risk associated with the wastes. This labeling is in accordance with federal regulations under the Atomic Energy Act.

In addition, personnel rarely have physical access to the unloading area while wastes are present. The general public never has access to the facility or the treatment system. Activities and procedures clearly recognize the contents of and hazards associated with the treatment unit and facility, and personnel are trained accordingly.

Addition of hazardous waste and major risk labels to tanks is currently being evaluated. It may not be possible to place labels directly on tanks without excessive radiation exposure to personnel. However, the existing systems for marking and labeling TSD units provides an equivalent level protection. In addition, warning signs are present on the entrance to the facility.

C. Personnel Training, WAC 173-303-330

A personnel training plan has been prepared and implemented. Facility personnel attend the Generator Hazards Safety Course (Course Number 006G). Dangerous waste on-the-job training (Course Number 006H) is provided to personnel who manage the waste at the facility. The training is presented annually to facility personnel. Training records for facility personnel are maintained and updated regularly.

D. Preparedness and Prevention, WAC 173-303-340

Emergency communication devices are available at the 204-AR Waste Unloading Facility. They include both internal PA systems, external alarms, and outside-line telephones. In addition, a protective glass window is utilized to visually observe facility treatment procedures during the unloading process.

The 204-AR facility is equipped with fire alarms, fire extinguisher, and fire deluge systems. In the event of an emergency, emergency response via onsite fire departments, Hanford patrol, and hazardous material response teams would occur as necessary.

Spill control and secondary containment includes a 1,500-gallon catch tank with high and low level monitoring alarms. The catch tank resides within a concrete vault with a stainless steel lined sump. Leak detection devices are present in the vault and alarms are activated in three separate locations if liquid greater than one inch accumulates. Spillage within the facility is directed to

the catch tank or the vault sump where it is directed through the 241-A-A valve pit to the appropriate DST.

Arrangements and mutual aid agreements have been made with non-Hanford Site parties who might be expected to respond in the event of emergencies, and these arrangements are documented in Memorandum of Understanding.

E. Contingency Plan and Emergency Procedures, WAC 173-303-350

An overall Hanford Site emergency plan exists and addresses emergencies that may occur at the Hanford Site. In addition, a contingency plan specific to the 204-AR Waste Unloading Facility exists (WHC-IP-0263-ETF Appendix C, 9/88). The Hanford Site emergency plan and the facility-specific contingency plan will be available and maintained at the 204-AR Waste Unloading Facility. The 204-AR facility contingency plan is amended as needed to ensure that it is kept current and accurate.

F. Emergencies, WAC 173-303-360

The appropriate procedures, as described in the Hanford Site emergency plan and the 204-AR Waste Unloading Facility contingency plan will be followed in the event of emergencies. Emergencies associated with the waste treatment activities in the 204-AR facility that require implementation of the Hanford Site emergency plan or the facility-specific contingency plan will be reported to the site Environmetal Protection organization. Notification will then be made to appropriate state and/or local agencies who have response roles. Follow-up written reports will be submitted to Ecology within fifteen days after occurence of an emergency that requires implementation of the emergency plan.

Emergencies that could threaten human health or the environment outside the 204-AR Waste Unloading Facility will be reported as soon as detected to Ecology and the National Response Center. In addition, reports of releases from the 204-AR facility will be submitted as described under Section III.L., below.

Requirements for Tank Systems

G. Applicability, WAC 173-303-640(1)

The 204-AR Waste Unloading Facility in-line treatment system, including its ancillary components, is permitted as "other treatment". The treatment process, equipment, ancillary components, and resultant end product most closely match and therefore were compared to, the tank system definitions and tank treatment. The overall facility procedures, equipment, training, emergency preparedness and prevention, benefit to the environment, and

administrative requirements meet the intent of the treatment by generator requirements. Therefore, this TBG request is being compared to appropriate tank and tank system regulations for which TBG status is directly applicable.

The requirements of WAC 173-303-640 apply to the accumulation and treatment of dangerous wastes in tank systems by generators; Except that, WAC 173-303-640(8)(c) does not apply, and in lieu of WAC 173-303-640(5)(b)(iii) for uncovered tanks, a minimum freeboard of two feet must be maintained.

The 204-AR Waste Unloading and Treatment Facility meets the intent of the an existing tank system as defined in WAC 173-303-040. Thus, the requirements of WAC 173-303-640 applicable only to new tank systems or components are not relevant to the 204-AR facility.

WAC 173-303-640 (2), assessment of existing tank system's integrity, require that an assessment of the system be conducted by January 12, 1990. Negotiation of corrective action schedules for dangerous waste tank systems are currently under way with Ecology. Included in these negotiations will be a schedule for conducting tank integrity assessments.

WAC 173-303-640 (4), containment and detection of releases, will be applicable to the 204-AR Waste Unloading Facility containment system on January 12, 1991.

H. Integrity Assessment, WAC 173-303-640(2)

A tank system integrity assessment will be performed and will be certified by an independent, qualified, registered professional engineer. The assessment of the integrity of the treatment system will be based on existing structural, design, construction, materials, and other information.

Tank integrity assessments are in addition to normal procedural inspection of the system occurring at least once per treatment shift. To date, there is no evidence of integrity failure for the tank system. Furthermore, a secondary containment system is in place (see Section II.I., below) in the event that leaks develop. It will represent the best available assessment, consistent with protection and safety of Hanford Site personnel and the environment.

The schedule to perform a tank system integrity assessment will be determined as part of a concentrated effort to assess and attain compliance on the Hanford Site with WAC-173-303-640. Corrective action schedules are currently being negotiated with Ecology for all Hanford site dangerous waste tank systems.

I. Design and Installation of New Tank Systems and Components, WAC 173-303-640(3)

The 204-AR facility meets the definition of an existing tank system as defined by WAC 173-303-040. The requirements of WAC 173-303-640(3) apply only to new tank systems and are, therfore, inapplicable to the 204-AR facility.

J. Containment and Detection of Releases, WAC 173-303-640(4)

As described in Section I.B., above, the 204-AR Waste Unloading Facility in-line treatment unit, ancillary piping, and connections, are protected with secondary containment consisting of a catch tank and sump housed within a concrete vault. Tank overflow and vault leak detection alarms exist. All secondary containment is sloped to drains and sumps designed to remove the waste. All other design and operation features of the 204-AR facility, catch tank, vault, and ancillary equipment associated with the treatment process satisfy the requirements for containment and detection of releases.

K. General Operation, WAC 173-303-640(5)

Dangerous wastes and treatment reagents are not injected into the treatment system if they could cause the system to leak, rupture, or otherwise fail. Spillage and overflows are prevented by monitoring the catch tank levels and leak detection equipment on a frequent basis during each operational shift.

Labeling of the 204-AR treatment system is in accordance with Section III.B., above. The 204-AR facility does not handle extremely hazardous waste that is toxic by inhalation. As described in Section III.C., above, treatment processes are operated to prevent the generation and release of emissions to the air.

L. Inspections, WAC 173-303-640(6) and 173-303-320(1), (2)(a), (b), and (d), and (3)

The inspection procedures at 204-AR address all emergency and monitoring equipment, as well as, all directly observable areas in the facility. Physical inspections of the specific portions of the treatment system and catch tank may not be possible due to the radiation risks. The radiation hazardous associated with physical inspection were addressed in a petition for rulemaking submitted to Ecology in accordance with Milestone M-22-01 of the Tri-Party Agreement.

M. Response to Releases, WAC 173-303-640(7)

When a leak or spill from the 204-AR Waste Unloading Facility treatment system is detected, the flow or addition of dangerous

wastes and/or treatment reagents to the system will be stopped. There are automatic systems in the tanks farms and at the facility to shut down the pumping at an indication of a leak. If necessary to prevent continued releases from the 204-AR facility system, the source of the solution (tank car) will be shut off. The cause of the leak or spill will be determined. Appropriate measures will be taken to correct the cause of the leak or spill before the treatment system is reintroduced to service. Releases to secondary containment systems are removed immediately by the floor drain and sump system, and are eventually routed through the 241-A-A valve pit and to the receiving DST. Any major repairs required as a result of a spill or leak from the 204-AR facility will be certified to Ecology by an independent, qualified, registered professional engineer.

If releases to the environment are detected as a result of a spill or leak from the treatment system, such releases will immediately be contained. Environmental releases, if they occur, will be removed and their impacts on the environment will be mitigated. Releases to the environment in excess of applicable Reportable Quantities (RQs), will be reported to Ecology within 24 hours of detection. The National Response Center will be notified pursuant to 40 CFR Part 302. Any 24-hour report to Ecology will be followed up by a written report on the release from the 204-AR facility. In addition, spill reports to Ecology are being submitted on a monthly basis.

N. Closure and Post-Closure Care, WAC 173-303-640(8)

At closure, dangerous wastes, and contaminated equipment and structures (including underlying materials contaminated with dangerous wastes or dangerous waste constituents) will either be removed from the 204-AR Waste Unloading Facility and immediately surrounding area, decontaminated, or stabilized and closed as a landfill. A closure plan will be developed for the 204-AR facility.

Closure of the treatment system and area will be performed in a manner that will: minimize the need for further maintenance; control, minimize, or eliminate post-closure releases that could threaten human health or the environment; achieve the removal and decontamination criteria of WAC 173-303-610(2)(b); and be consistent with the requirements of the Atomic Energy Act and ALARA goals.

O. Special Requirements, WAC 173-303-640(9) and (10)

Small quantities of ignitable waste may be discharged to the 340 facility. The resulting solution received by the 204-AR facility would not meet the definition of ignitable due to mixing with other waste material. Reactive waste is not received by 204-AR. The interior of the ancillary piping is compatible with all dangerous wastes and treatment reagents managed in the system.

ATTACHMENT D

Treatment by Generator Request
T Plant Treatment Tank

I. Treatment by Generator for Waste Tank 15-1, Building 221-T Canyon

A. Generator Waste Description

Tank 15-1 receives mixed wastes (MW) generated during equipment decontamination activities at Building 221-T and the adjacent Building 2706-T. Equipment decontaminated at the two buildings include centrifuges, fuel casks, railroad equipment, buses and automobiles, agitators, process vessels, wrenches, piping and valves, instrumentation, road building machinery, and plant process equipment. T-Plant is a radiological decontamination facility, not a Dangerous Waste decontamination facility. Its mission is to perform decontamination activities to reduce or remove smearable levels of radiologic contamination. T-Plant's tank waste stream is considered MW because of past use of degreasers and pH adjustment (treatment) prior to shipping.

T Plant operators perform decontamination operations on equipment that is contaminated with alpha- and beta/gamma-emitting radionuclides. Depending on the equipment and nature of the contamination, the following decontamination methods have been used at T Plant: steam cleaning; high-pressure water application; blasting with dry and wet abrasives; acid/base chemical immersion or spraying; electrocleaning in phosphoric/chromic acid baths; and occasional cleaning by hand using small amounts of solvents and detergents. Recent efforts to reduce the hazardous nature of the decontamination waste generated at T Plant has resulted in a significant reduction in the number of decontamination chemicals used. Hazardous materials have been eliminated from use during T Plant decontamination. Water, steam, wet sandblast grit, and detergents are the primary decontamination agents currently used. Section IV of this report provides a more detailed description of the T Plant decontamination waste stream.

B. Waste Treatment Process Description

Liquid wastes generated during the decontamination processes are discharged to a 24-inch line encased in concrete located below the 221-T canyon. The line drains into several temporary holding tanks which are routed to Tank 15-1. Once sufficient waste volume has accumulated in Tank 15-1, the collected liquid wastes are treated.

The purpose of the treatment conducted in Tank 15-1 is to make the liquid wastes generated during decontamination activities at T Plant amenable for storage in the 200 West Area Tank Farms. In general, the treatment involves the addition of sodium hydroxide and sodium nitrites to meet double-shell tank acceptance criteria. The caustic and nitrite additions are done to inhibit corrosion in transfer lines and double-shell tanks.

Tank 15-1 is located in T Plant Canyon Cell 15R in Building 221-T, in the 200 West Area of the Hanford Site. Cell 15R is a fully enclosed concrete cell that acts primarily as protection against radiation exposure, and consequently also provides secondary containment and collection in the event of losses from Tank 15-1. The only access allowed to cell 15R, which is almost always sealed while wastes are present, is by remote crane operations. People are never allowed to physically enter cell 15R. The concrete surrounding cell 15R ranges from six feet to nine feet in thickness. The cell is sloped to a corner drain that discharges to the 24-inch drain. Thus, any losses from Tank 15-1 are immediately removed from the secondary containment (cell 15R) and eventually returned to Tank 15-1 after the tank level has been reduced or the tank has been repaired to prevent further overfills or leaks.

Tank 15-1 is a 14,000-gallon capacity stainless steel tank. The tank is oval-shaped, with a flat bottom and open top. Its approximate dimensions are 14 feet high by 15 feet wide by 20 feet long. A manometer dedicated to Tank 15-1 measures liquid levels in the tank. Pipelines entering the tank allow for the addition and removal of wastes and materials.

When sufficient waste has accumulated in Tank 15-1, it is sampled and analyzed. Analyses are performed for parameters such as percent solids, pH, nitrite, sulfate, permanganate, phosphate, plutonium, and uranium. The waste is then chemically treated by addition of sodium nitrite to greater than 600 parts per million, and addition of sodium hydroxide caustic solution to adjust the pH to be greater than 12.5. These are the minimum acceptance criteria for liquid waste stored at the 200 West Area Tank Farms. Typical quantities of sodium nitrite added to a waste batch are 100 to 200 pounds. Typical quantities of caustic added are 200 to 500 pounds. Personnel are present during treatment to detect possible disruptions or problems. After treatment, the waste volume is confirmed and additional analyses of the wastes are performed to ensure the treatment process was properly conducted and confirm that the Tank Farms specifications have been met.

II. Comparison with State Treatment by Generator Criteria

The criteria established by Ecology in TIM No. 86-3, as presented in preamble of this attachment, were reviewed with respect to the Tank 15-1 treatment process. Following is a discussion of how the Tank 15-1 treatment process satisfies each of Ecology's criteria.

A. Inherent Risk of the Treatment Process.

The treatment process, addition of sodium nitrite and sodium hydroxide, is considered a low risk process. The sodium nitrite and sodium hydroxide are added slowly to prevent uncontrolled reaction. Due to the nature of the waste being treated (primarily water and slightly basic), there is a low potential for generation of gases during treatment; however, all cells in Building 221-T are maintained at a slight negative pressure, so escape of gases from the cells to areas where workers are located cannot occur. The ventilation system continuously removes gases generated in cell 15R to a filtration system and exhaust stacks.

The treatment process occurs in a contained vessel isolated from employees through a physical barrier and presents a low risk to public health and the environment.

B. Waste Toxicity.

Wastes treated in Tank 15-1 pose toxic risks primarily from their radioactive nature - the waste material is a dilute solution, primarily water with soaps, emulsified oils, sandblast grit and dirt, and traces of other materials washed from decontaminated equipment. Historically, the waste mixtures at Tank 15-1 have been corrosive and contained low concentrations of toxic constituents. These wastes are treated to meet Tank Farm acceptance criteria (i.e., pH and sodium nitrite content).

Acceptance of the waste by Tank Farms may facilitate further treatment activities in the Grout Treatment Facility and/or the Hanford Waste Vitrification Plant which will immobilize the toxic constituents; therefore, this criteria is met.

C. Risk and Probability of Release.

The principal avenue of waste release from Tank 15-1 would be to the secondary containment system in cell 15R (and possibly to air). There is no evidence of integrity failure for the Tank 15-1 tank system including the secondary containment system. As discussed above, release to the atmosphere, a low potential, does not pose a risk because it is withdrawn and filtered prior to its exhaust to the atmosphere. A filter management system is in place to maintain filter efficiency and detect failures of the filter system. The HEPA filters are monitored for radiological

contamination and pressure drop. Specific standards are established for each criteria to ensure proper maintenance of the system.

To date, there is no evidence of integrity failure for the Tank 15-1 tank system including the secondary containment system. Releases from the 15-1 tank to its containment system are detected via a tank high level alarm, a tank manometer, and a liquid level chart recorder. These systems are monitored daily and calibration checked regularly. Use of these systems and current operating procedures make the risk of a liquid release low. The secondary containment can provide containment for the volume of tank 15-1.

Because these systems are radiologically shielded, there is minimal potential for human or environmental contact with wastes in 15-1 tank or cell 15R containment system or appurtenances.

Further, plans are underway for a tank integrity assessment on the entire decontamination waste collection tank system, discussed below. In addition, the design of the 221-T Canyon, with its thick concrete shell, reduces the risk and probability of a release to the environment.

D. Relative Benefit to the Environment.

Treatment of the wastes accumulated in Tank 15-1 renders those wastes amenable for storage at the 200 West Area Tank Farms double-shell tanks. As noted above, treatment is performed to inhibit corrosion and stabilize the radiological characteristics of this waste, directly benefitting the environment by protecting the double-shell tank system from failure. If treatment was not performed, the wastes could not be stored in double shell tanks and other methods of storage would have to be considered. Alternate storage options do not exist at this time.

III. Compliance with Generator Accumulation Requirements.

The following information presents the measures taken toward meeting the applicable generator accumulation requirements set forth in WAC 173-303-200(1) and ensuring compliance for the Tank 15-1 tank system and the treatment processes conducted in the tank.

General Requirements

A. Transfer of Dangerous Wastes to a Permitted Facility within Ninety Days of Generation, WAC 173-303-200(1)(a)

As discussed above in Section I.B., wastes that accumulate in Tank 15-1 are treated, at least bimonthly, and transferred immediately to the 200 West Area Tank Farms. Thus, wastes never accumulate in Tank 15-1 for more than ninety days after they are

generated. Existing procedures will be modified to ensure this practices is performed.

B. Labeling, WAC 173-303-200(1)(d)

Personnel rarely have physical access to cell 15R or Tank 15-1 and never have physical access while wastes are present in the tank. The public never has access to cell 15R or Tank 15-1. Activities and procedures at Building 221-T clearly recognize the contents of and hazards associated with Tank 15-1, and personnel are trained accordingly. Any labeling requirements under the federal Atomic Energy Act are currently satisfied. Although the present labeling system does not meet the RCRA labeling requirements for tank systems, the existing system for marking and labeling these units provides an equivalent level of protection.

C. Personnel Training, WAC 173-303-330

A personnel training plan has been prepared and is being implemented. Dangerous waste on-the-job training (Course number 006H) and Generator Hazards Safety Course (Course Number 006G) are currently presented annually to each employee at Building 221-T. Training records for facility personnel are maintained and updated as needed. The training plan and training records are available at Building 221-T.

D. Preparedness and Prevention, WAC 173-303-340

Building 221-T has both an internal and an external telephone communication system. An alarm system can be used to notify personnel as well as emergency response teams in the event of an emergency. Fire extinguishers and spill control equipment are present throughout Building 221-T. Arrangements and agreements have been made with non-Hanford Site parties who might be expected to respond in the event of emergencies, and these arrangements are documented in Memorandums of Understanding.

E. Contingency Plan and Emergency Procedures, WAC 173-303-350

An overall Hanford Site emergency plan exists and addresses emergencies that may occur at the Hanford Site. In addition, a contingency plan has been prepared for T Plant that specifically includes the Tank 15-1 tank system. The Hanford Site emergency plan and the T Plant contingency plan are available and maintained at T Plant and the Hanford Site in various locations. The T Plant contingency plan is amended as needed to ensure that it is kept current and accurate.

F. Emergencies, WAC 173-303-360

The appropriate procedures, as described in the Hanford Site emergency plan, and to be incorporated in the T Plant contingency plan, will be followed in the event of emergencies. Emergencies associated with the Tank 15-1 tank system that require implementation of the Hanford Site emergency plan or the T Plant contingency plan will be reported as soon as they are detected to the WHC Environmental Protection organization. Notification is then made through DOE-RL to appropriate state and/or local agencies who have response roles. Follow-up written reports will be submitted to Ecology within fifteen days after occurrence of an emergency requiring implementation of the emergency plan.

Emergencies that could threaten human health or the environment outside Building 221-T will be reported as soon as detected to Ecology and the National Response Center. In addition, reports of releases from Tank 15-1 will be submitted as described under Section III.M., below.

Requirements for Tank Systems

G. Applicability, WAC 173-303-640(1)

The requirements of WAC 173-303-640 apply to the accumulation and treatment of dangerous wastes in tanks by generators; except that, WAC 173-303-640(8)(c) does not apply, and in lieu of WAC 173-303-640(5)(b)(iii) for uncovered tanks, a minimum freeboard of 2 feet must be maintained.

WAC 173-303-640(2), assessment of existing tank system's integrity, requires that an assessment of the Tank 15-1 tank system be conducted by January 12, 1990.

WAC 173-303-640(4), containment and detection of releases, will not be applicable to the Tank 15-1 containment system until January 12, 1991.

H. Integrity Assessment, WAC 173-303-640(2)

A tank system integrity assessment will be performed, and will be certified by an independent, qualified, registered professional engineer. The assessment of the integrity of the Tank 15-1 system will be based on existing structural, design, construction, materials, and other information. Although an assessment of the tank system has not yet been performed, negotiations are underway to schedule completion of integrity assessments for Hanford Site dangerous waste tank systems. These schedules, when complete, will be included in the Hanford Federal Facility Agreement and Consent Order.

To date, there is no evidence of integrity failure for the Tank 15-1 system. In addition, a secondary containment system is in place (see section III.J., below) in the event that leaks do develop.

I. Design and Installation of New Tank Systems or Components, WAC 173-303-640(3)

Tank 15-1, including its components, is an existing tank system as defined in WAC 173-303-040. Thus, the requirements of WAC 173-303-640 applicable only to new tank systems or components are not relevant to Tank 15-1.

J. Containment and Detection of Releases, WAC 173-303-640(4)

As described in Section I.A., above, Tank 15-1 and most ancillary piping and connections to Tank 15-1 are protected with secondary containment. Cell 15R provides secondary containment for Tank 15-1. Currently, Tank 15-1 has both a high level alarm and a liquid level chart recorder. If a release to cell 15R were to occur, it would be returned to Tank 15-1 via the 24-inch concrete encased line, draining to tank 5-7 where it is pumped back to 15-1. Tank 5-7 has the same alarms and level recorders as 15-1, with an additional alarm in its' secondary containment sump (which in this case acts as a third level containment). The containment and leak detection systems will be evaluated as part of the tank system integrity assessment effort described in Section III.H.

K. General Operation, WAC 173-303-640(5)

Dangerous wastes and treatment reagents are not placed in Tank 15-1 if they could cause the tank to leak, rupture, or otherwise fail. Spillage and overflows are prevented by monitoring the tank levels during each operational shift.

Freeboard in the tank is maintained to be at least 2 feet by inspections and readings from tank level indicators (i.e., the Tank 15-1 manometer). The level in the tank is not allowed to exceed 144 inches (12 feet) following treatment and, as stated in Section I.B., above, the tank is about 14 feet high. Labeling of Tank 15-1 has been addressed in Section III.B., above. Tank 15-1 does not handle extremely hazardous waste that is toxic by inhalation. As previously discussed in Sections II.A. and C., treatment processes are operated to prevent the generation and release of emissions to the atmosphere.

L. Inspections, WAC 173-303-640(6) and 173-303-320(1), (2)(a), (b), and (d), and (3)

A written inspection plan and schedule for Building 221-T has been implemented. The inspection plan requires daily inspection of monitoring equipment and maintenance of an inspection log, with notations of observations and corrective actions, as needed, and specifically includes the 15-1 Tank system.

Due to the radioactive nature of the dangerous wastes treated in Tank 15-1, physical observation of some portions of the tank system during its operation exceeds regulatory limits for radiation exposure. Further evaluation of alternate methods for meeting the intent of physical inspection requirement is being performed. A petition for rulemaking change to the physical inspection requirements was submitted to the EPA and Ecology in accordance with the Hanford Federal Facility Agreement and Consent Order milestone M-22-01.

M. Response to Releases, WAC 173-303-640(7)

If a leak or spill from Tank 15-1 is detected, the flow or addition of dangerous wastes and/or treatment reagents to the tank will be stopped. If necessary to prevent continued releases from Tank 15-1, the tank will be emptied to an upstream accumulation tank. The cause of the leak or spill will be determined and appropriate measures will be taken to correct the cause of the leak or spill before Tank 15-1 is reintroduced to service. Releases to secondary containment systems are removed immediately by the cell 15R containment system and eventually rerouted to Tank 15-1. Any major repairs required as a result of a spill or leak from Tank 15-1 will be certified to Ecology by an independent, qualified, registered professional engineer.

If releases to the environment are detected as a result of a spill or leak from Tank 15-1, such releases will immediately be contained. Environmental releases, if they occur, will be removed and their impacts on the environment will be mitigated. Releases to the environment in excess of applicable Reportable Quantities (RQs), or 1 pound, whichever is less, will be reported to Ecology within 24 hours of detection. The National Response Center will be notified pursuant to 40 CFR Part 302. If a 24-hour report to Ecology is necessary, it will be followed up by a written report on the release from Tank 15-1.

N. Closure and Post-Closure Care, WAC 173-303-640(8)

At closure, dangerous wastes and contaminated equipment and structures (including underlying materials contaminated with dangerous wastes or dangerous waste constituents) will either be removed from Tank 15-1 and the surrounding area (cell 15R), decontaminated, or stabilized and closed as a landfill. Closure of Tank 15-1 and the surrounding area will be performed in a manner that will minimize the need for further maintenance; control, minimize, or eliminate post-closure releases that could threaten human health or the environment; achieve the removal and decontamination criteria of WAC 173-303-610(2)(b); and be consistent with the requirements of the Atomic Energy Act and ALARA goals.

O. Special Requirements, WAC 173-303-640(9) and (10)

Tank 15-1 does not receive or handle ignitible or reactive dangerous wastes. Introduction of acids and caustic to the tank during treatment are done under controlled conditions designed to prevent hazards. The interior of Tank 15-1 is compatible with all dangerous wastes and treatment reagents managed in the tank.

IV. Waste Analysis

A. Tank 15-1 Waste Characterization

1. Theoretical Waste Characterization

The dangerous waste liquids treated in Tank 15-1 are comprised primarily of small amounts of decontamination chemicals in water. Currently, only water, steam, sandblast grits, and detergent are used for decontamination; however a variety of products have been used in the past. These chemicals and their principal ingredients include:

Acetone
Citric Acid
Nitric Acid
Potassium Permanganate
Rust remover (hydrochloric acid)
Sodium hydroxide
Sodium carbonate
Sodium nitrite
Turco Desealzit (methylene chloride)
Turco 4512A and 4502 (phosphoric acid)
Turco 4501A (potassium hydroxide)
Turco 4306D (sodium bisulfate)
Turco 4520 (ammonium oxalate)
Turco 4518 and 4521 (oxalic acid)
Turco FAB 5589 (isopropyl alcohol, sodium hydroxide)

Although many of the above products are no longer used for decontamination at the T Plant facility, because the T Plant tank system has not been decontaminated since there use, any one or more of these chemicals may be in Tank 15-1 at dilute quantities during treatment. In addition, small amounts of oil, grease, and dirt from equipment being decontaminated is also likely to be present in the Tank 15-1 wastes.

Because current decontamination practices use only water, steam, grit, and detergent, wastes treated in Tank 15-1 are comprised primarily of slightly contaminated waste water. In the past, the waste stream was occasionally below a pH of 2.0 primarily due to the use of nitric acid and designated as corrosive dangerous wastes (D002).

The principal risk associated with the wastes in Tank 15-1 is the radioactive nature of the materials in the tank. Chemically, the contents of the tank present a risk primarily from corrosivity after treatment has occurred (pH is raised to 12.5). Potential organic compounds are anticipated to be at low concentrations.

2. Tank 15-1 Sample Analysis Data

No analytical data is available at this time to support waste designation of Tank 15-1 contents. Because the effect of equipment contamination on the waste stream designation is not currently known, the process knowledge designation provided below is based solely on the decontamination agents that have been and are used at T Plant. Several samples have been taken to support characterization and are currently being analyzed. A thorough evaluation of the T Plant decontamination process and other T Plant activities was conducted to determine the potential constituents of the waste stream. These analytical results will be used to confirm and/or modify the process knowledge waste designation presented below.

B. Tank 15-1 Waste Designation

1. Discarded Chemical Products

All of the decontamination chemical compounds identified in Section IV.A.1 were compared to the discarded chemical product list contained in WAC 173-303-9903. Two of the chemicals identified were listed in WAC 173-303-9903 (acetone and methylene chloride); however, none of the T Plant tank systems wastes are considered discarded chemical products or manufacturing chemical intermediate.

2. Dangerous Waste Sources

All of the decontamination chemical compounds identified in Section IV.A.1. were compared to the dangerous waste sources list contained in WAC 173-303-9904. Both acetone and methylene chloride were included on the list. Previous T Plant operations used acetone (F003) and methylene

chloride (F002) as decontamination agents, but they are no longer used. Because Tank 15-1 has not been decontaminated since used for management of listed waste, the present T Plant decontamination waste is considered a listed waste.

3. Infectious Dangerous Wastes

Because the waste stream does not fall under the definition of infectious dangerous waste, it is not regulated as an infectious dangerous waste.

4. Dangerous Waste Mixtures

Toxic: Several of the decontamination agents that have been used at T Plant (see Section IV.A.1) must be considered to determine whether the waste stream is toxic. In addition, toxic contaminants may be introduced to the stream from equipment. Although the concentration of these constituents is believed to be small, analysis data will be used to determine the effect of this contamination on the toxicity of the waste.

Persistence: Although none of the decontamination products identified in Section IV.A.1. are considered a persistent material, persistent agents could be introduced into the waste stream from the equipment being decontaminated. The potential concentration of these agents is not anticipated to be significant; however, analysis results will be used to verify the presence or absence of persistent agents.

Carcinogens: Only one of the decontamination products identified in Section IV.A.1. was identified as a carcinogen, methylene chloride. It also is possible, although not anticipated, that carcinogenic agents are introduced into the waste stream from the equipment being decontaminated. Because methylene chloride is not longer used at T Plant, it is not likely to be present in significant quantities. Analytical results, when received, will be used to verify the presence or absence of carcinogenic agents.

5. Dangerous Waste Characteristics

Ignitability: Because the T Plant decontamination waste stream consists primarily of water with small concentrations of contaminants, it is highly unlikely that the waste stream would exhibit the characteristic of ignitability.

Corrosivity: In the past the T Plant tank waste stream pH has been less than 2.0 prior to treatment with sodium hydroxide and sodium nitrite; therefore, the waste stream is designated as corrosive waste (D002). Current decontamination practices at T Plant (nitric acid is no longer used) reduce the potential for generation of acidic waste. Recent pH monitoring of the tank contents prior to treatment have shown the waste stream to be slightly basic prior to treatment.

Reactivity: Again, because the T Plant decontamination waste stream consists primarily of water, it is not likely to meet any of the definitions of reactivity identified in WAC 173-303-090. The waste is not unstable, does not react violently with water, form explosive mixtures, generate toxic gases, and is not explosive. Sample analysis results, when received, will be used to verify this conclusion.

EP Toxicity: None of the T Plant decontamination chemicals identified in Section IV.A.1. are included in the EP toxicity list of WAC 173-303-090(8). Although, it is possible that contaminants from equipment being decontaminated may introduce EP toxic constituents to the waste stream, it is not anticipated that the concentration of EP toxic contaminants introduced from equipment would cause the waste stream to be designated as EP toxic. Sample analysis results, when available, will be used to support this conclusion.

C. Tank 15-1 Waste Designation Summary and Conclusions

Based on process knowledge of the chemical decontamination agents that are and have been used in the T Plant decontamination stream, the following waste codes have been determined applicable to the waste stream: F002, F003, and D002.

A thorough evaluation of the T Plant decontamination process and other T Plant activities was conducted to determine the potential constituents of the waste stream. Samples have been drawn and are being analyzed at this time. These analytical results will be used to confirm and/or modify the process knowledge waste designation presented above. This analytical data will also be summarized and submitted to Ecology when available.

221-T BUILDING
TANK 15-1
SITE PLAN

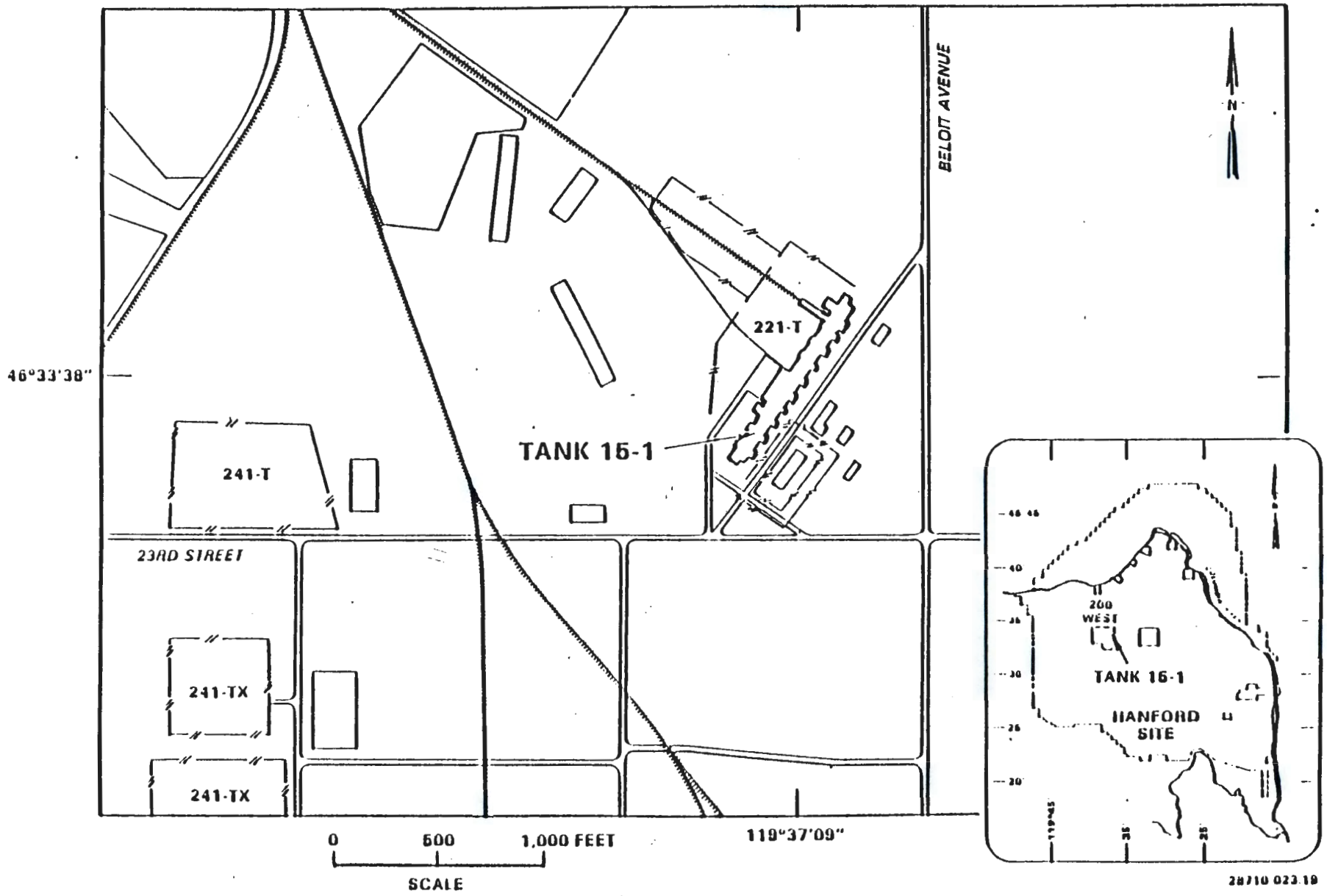

WA7890008967

BUILDING 221-T
TANK 15-1 LOCATION

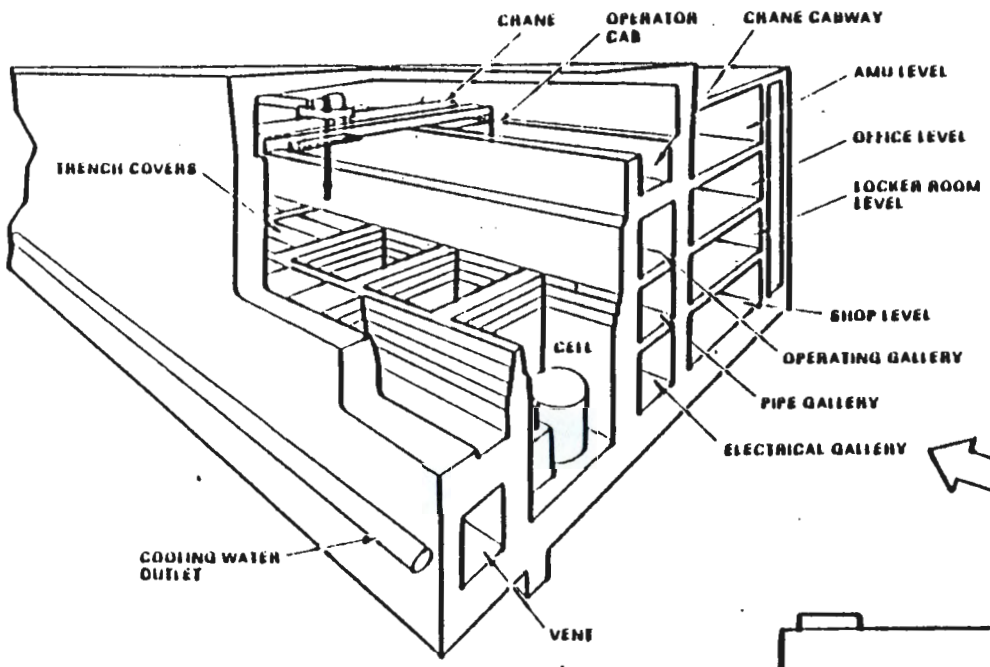

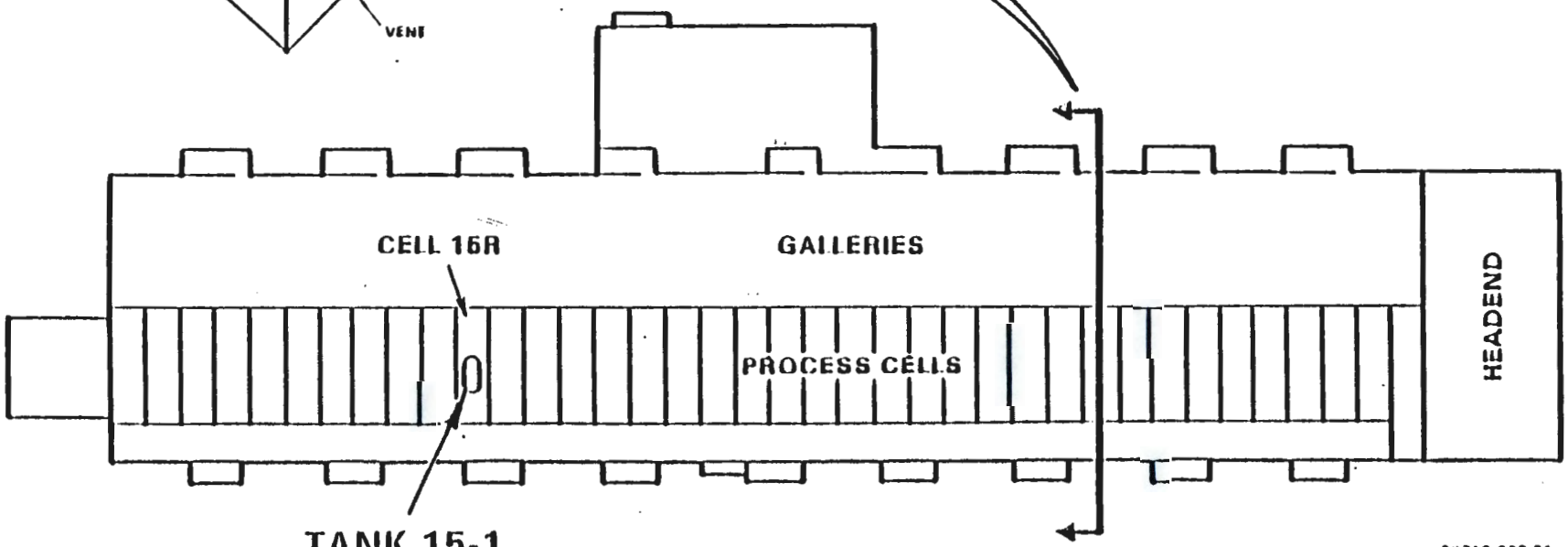

TANK 15-1
(14,000 GALLON CAPACITY)

28710 023 21

WA7890008967

TANK 15-1

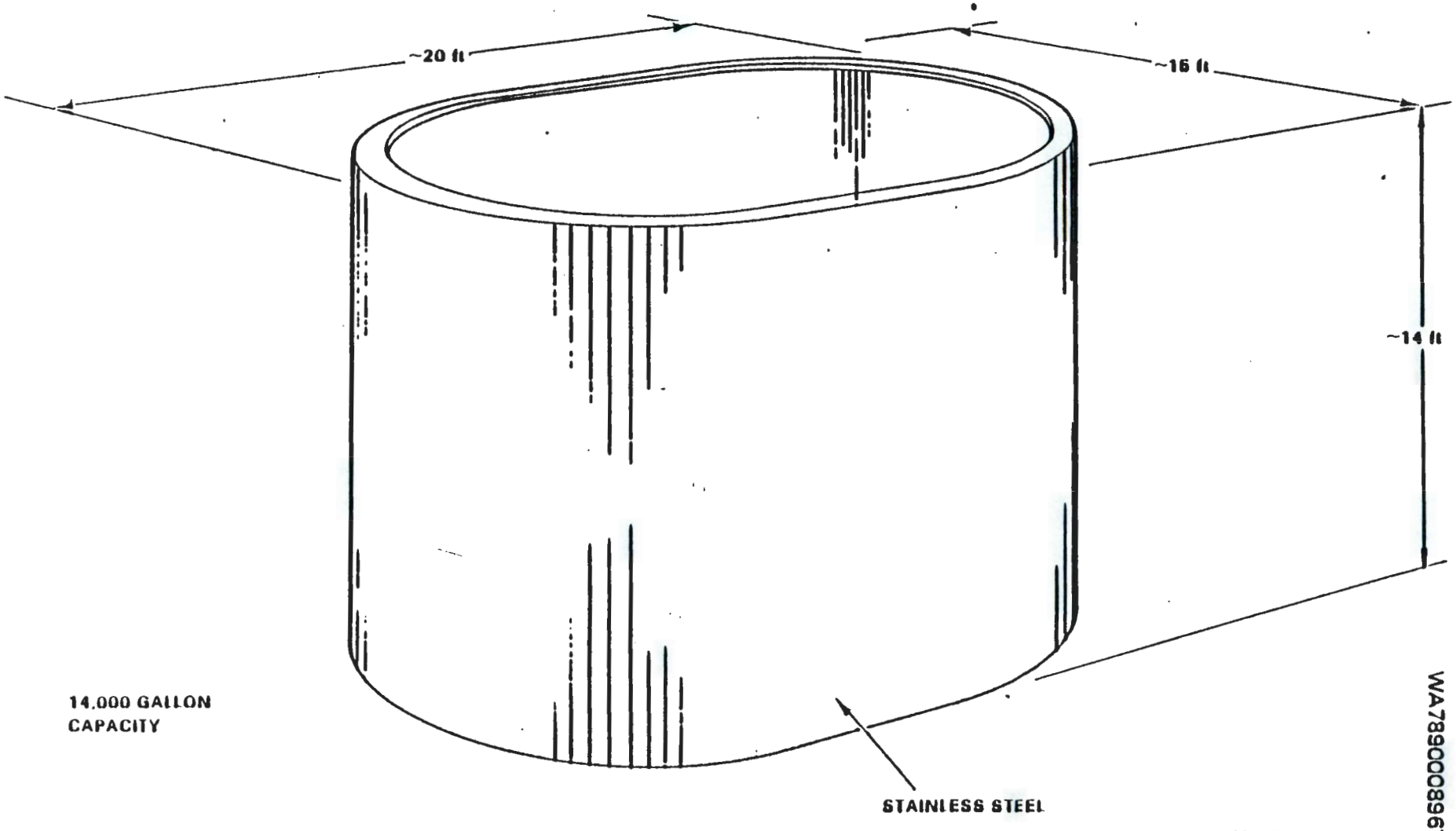

14,000 GALLON
CAPACITY

28710 023.86

WA7890008967

DISTRIBUTION COVERSHEET

Author	Addressee	Correspondence No.
R. E. Lerch, 6-5556	P. T. Day, EPA T. L. Nord, Ecology	Incoming: 9002964

Subject

RESUBMITTAL OF REQUEST FOR FACILITIES TO BE MANAGED AS TREATMENT-BY-GENERATORS MILESTONE M-23-01

Internal Distribution

Approval	Date	Name	Location	w/att
		Correspondence Control		
		T. D. Blankenship	R1-62	
		N. C. Boyter	R2-52	
		S. L. Brey	T6-12	
		P. J. Crane	B2-19	
		W. T. Dixon	H4-52	
		R. M. Doyle	T3-28	
		G. T. Dukelow	R2-97	
		J. A. Eacker	R1-51	
		B. G. Erlandson	B2-19	
		J. C. Fulton	R2-42	
		L. A. Garner	B2-19	
		C. J. Geier	H4-57	
		K. A. Hadley	R2-42	
		M. J. Hall	T6-12	
		W. H. Hamilton	R2-40	
		K. L. Hoewing	B3-06	
		P. J. Johnson	R1-51	
		E. J. Kosiancic	R2-67	
		G. J. Lebaron	S5-80	
		R. E. Lerch (Assignee)	B2-35	
		D. E. Mahagin	H4-21	
		H. E. McGuire	B2-35	
		A. G. Miskho	B2-19	
		R. D. Morrison	B2-35	
		M. A. Payne	S5-66	
		R. D. Pierce	R2-80	
		L. L. Powers	B2-35	
		L. W. Roberts	R2-97	
		F. A. Ruck	H4-57	
		W. G. Ruff	R2-50	
		D. E. Simpson	B3-51	
		J. W. Stiffler	R3-20	
		C. R. Stroup	T6-07	
		S. A. Wiegman	G6-55	
		E. J. Wright	B2-19	
		EDMC	H4-22	

RECEIVED
JUL 09 1990
CORRESPONDENCE CONTROL