0032899

FINAL

FEASIBILITY STUDY REPORT

FORT LEWIS LOGISTICS CENTER
REMEDIAL INVESTIGATION / FEASIBILITY STUDY

Department of the Army
Seattle District, Corp of Engineers
Ebasco Environmental
Shannon & Wilson, Inc.

DEC 1993

May 1990

FORT LEWIS LOGISTICS CENTER
FEASIBILITY STUDY

Department of the Army
Seattle District, Corps of Engineers
Ebasco Environmental
Shannon & Wilson, Inc.

May 1990

DEC 1993
RECEIVED
EPIC

This document is intended to comply with the National Environmental Policy Act of 1969.

7696K

TABLE OF CONTENTS

	Page
LIST OF FIGURES	viii
LIST OF TABLES	xi
GLOSSARY	xvi
EXECUTIVE SUMMARY	ES-1
1.0 INTRODUCTION	1-1
1.1 PURPOSE AND OVERVIEW	1-1
1.2 SITE BACKGROUND INFORMATION	1-2
1.2.1 Site Location and Description	1-2
1.2.2 Site History	1-9
1.2.3 Community Relations	1-9
1.3 NATURE AND EXTENT OF THE PROBLEM	1-12
1.3.1 Source Area Contamination	1-12
1.3.2 Upper Aquifer Contamination	1-20
1.3.3 Lower Aquifer Contamination	1-24
1.3.4 Surface Water and Sediment Contamination	1-24
1.4 RISK ASSESSMENT	1-25
1.4.1 Methodology	1-25
1.4.2 Risks to Human Health	1-28
1.4.3 Risks to the Environment	1-28
1.5 VOLUMES OF CONTAMINATED SOURCE AREA SOILS AND GROUNDWATER	1-31
1.5.1 Soil Source Area Contamination	1-31
1.5.2 Contaminated Groundwater Plume in Unconfined Aquifer	1-33
1.6 APPLICABLE OR RELEVANT AND APPROPRIATE REQUIREMENTS	1-34
1.6.1 Introduction	1-34
1.6.2 ARARs for Hazardous Waste Management and Cleanup	1-35
1.6.3 Water Quality Protection	1-44
1.6.4 Air Quality	1-47
1.7 REMEDIAL ACTION OBJECTIVES	1-48
2.0 IDENTIFICATION, SCREENING, AND EVALUATION OF REMEDIAL TECHNOLOGIES AND PROCESS OPTIONS	2-1
2.1 IDENTIFICATION OF TECHNOLOGIES AND PROCESS OPTIONS	2-1
2.1.1 General Response Actions	2-1
2.1.2 Remedial Technology Types and Process Options	2-1

TABLE OF CONTENTS (Continued)

Page

2.2 SCREENING OF TECHNOLOGY TYPES AND PROCESS OPTIONS . . . 2-2

2.2.1 Screening of Soil Technologies 2-8
2.2.2 Screening of Groundwater Technologies 2-18

2.3 EVALUATION OF PROCESS OPTIONS 2-25

2.3.1 Evaluation of Soil Remedial Process Options . . 2-28
2.3.2 Evaluation of Groundwater Remedial Process Options 2-28

2.4 SUMMARY OF TECHNOLOGY AND PROCESS OPTION SCREENING AND EVALUATION 2-41

3.0 DEVELOPMENT OF REMEDIATION ALTERNATIVES FOR SOIL SOURCE AREAS 3-1

3.1 ALTERNATIVE DEVELOPMENT METHODOLOGY 3-1
3.2 SOIL SOURCE AREA CONTAMINATION 3-7
3.3 DESCRIPTION AND EVALUATION OF SOIL PROCESS OPTIONS . . 3-8

3.3.1 No Action 3-8
3.3.2 Institutional Actions 3-8
3.3.3 Containment 3-9
3.3.4 Excavation and Disposal of Soils 3-15
3.3.5 Excavation and Treatment of Soils 3-20
3.3.6 *In Situ* Treatment of Soils 3-27

3.4 SUMMARY OF ALTERNATIVE DEVELOPMENT 3-30

3.4.1 No Remediation Alternatives 3-30
3.4.2 Containment Options 3-34
3.4.3 Excavation and Disposal Options 3-34
3.4.4 Excavation and Treatment Options 3-34
3.4.5 *In Situ* Treatment Options 3-37

3.5 SUMMARY OF FINAL CANDIDATE ALTERNATIVES FOR SOURCE AREA REMEDIATION 3-37

4.0 DEVELOPMENT OF ALTERNATIVES FOR GROUNDWATER 4-1

4.1 ALTERNATIVE DEVELOPMENT METHODOLOGY 4-1
4.2 EXTRACTION SCHEMES 4-3

4.2.1 Groundwater Extraction Along I-5 4-6
4.2.2 Combined Groundwater Extraction Along I-5 and Near Source Areas 4-7

TABLE OF CONTENTS (Continued)

Page

4.3 "NO REMEDIAL ACTIONS" ALTERNATIVES 4-8

4.3.1 Description of "No Remedial Actions" Alternatives 4-8
4.3.2 Evaluation of "No Remedial Actions" Alternatives 4-9

4.4 TREATMENT PROCESS OPTIONS ASSUMING GROUNDWATER EXTRACTION ALONG I-5 4-9

4.4.1 Description of Treatment Process Options Assuming Groundwater Extraction Along I-5 . . 4-9
4.4.2 Evaluation of Treatment Process Options Assuming Groundwater Extraction Along I-5 . . 4-18

4.5 DISPOSAL PROCESS OPTIONS ASSUMING GROUNDWATER EXTRACTION ALONG I-5 4-21

4.5.1 Description of Disposal Process Options Assuming Groundwater Extraction Along I-5 . . 4-21
4.5.2 Evaluation of Disposal Process Options Assuming Groundwater Extraction Along I-5 . . 4-25

4.6 TREATMENT PROCESS OPTIONS ASSUMING COMBINED GROUNDWATER EXTRACTION ALONG I-5 AND NEAR SOURCE AREAS 4-30

4.6.1 Description of Treatment Process Options Assuming Combined Groundwater Extraction Along I-5 and Near Source Areas 4-30
4.6.2 Evaluation of Treatment Process Options Assuming Combined Groundwater Extraction Along I-5 and Near Source Areas 4-39

4.7 DISPOSAL PROCESS OPTIONS ASSUMING COMBINED GROUNDWATER EXTRACTION ALONG I-5 AND NEAR SOURCE AREAS 4-40

4.7.1 Description of Disposal Process Options Assuming Combined Groundwater Extraction Along I-5 and Near Source Areas 4-42
4.7.2 Evaluation of Disposal Process Options Assuming Combined Groundwater Extraction Along I-5 and Near Source Areas 4-47

4.8 ALTERNATIVE DEVELOPMENT 4-47

4.8.1 "No Remedial Actions" Alternatives 4-50
4.8.2 Treatment and Disposal Process Options Assuming Groundwater Extraction Along I-5 . . 4-50

TABLE OF CONTENTS (Continued)

Page

4.8.3 Treatment and Disposal Process Options Assuming Groundwater Extraction Along I-5 and Near Source Areas 4-55

4.9 SUMMARY 4-58

5.0 DETAILED ANALYSIS OF SOIL SOURCE AREA REMEDIATION ALTERNATIVES 5-1

5.1 EVALUATION CRITERIA 5-1

5.1.1 Short-Term Effectiveness 5-1
5.1.2 Long-Term Effectiveness 5-4
5.1.3 Reduction of Toxicity, Mobility, and Volume . . 5-5
5.1.4 Implementability 5-6
5.1.5 Protection of Human Health and the Environment . 5-7
5.1.6 Compliance with ARARs 5-8
5.1.7 Support Agency Acceptance and Community Acceptance 5-9
5.1.8 Cost 5-9

5.2 DESCRIPTION OF "NO ACTION" - ALTERNATIVE S1 5-10

5.2.1 Residual Risk 5-10
5.2.2 Estimated Cost 5-11

5.3 DESCRIPTION OF "INSTITUTIONAL CONTROLS" ALTERNATIVE (S2) 5-11

5.3.1 Residual Risk 5-12
5.3.2 Estimated Cost 5-13

5.4 DESCRIPTION OF CONCRETE SURFACE CAP (S3) 5-13

5.4.1 Pre-Installation Activities 5-14
5.4.2 Action-Specific ARARs 5-14
5.4.3 Surface Cap Design 5-15
5.4.4 Public Protection and Worker Safety During Construction 5-17
5.4.5 Residual Risk 5-17
5.4.6 Estimated Remediation Cost 5-18

5.5 EXCAVATE AND SHIP TO OFFSITE RCRA LANDFILL (S4) 5-18

5.5.1 Action-Specific ARARs 5-20
5.5.2 Pre-Excavation Activities 5-20
5.5.3 Excavation and Shipping 5-21
5.5.4 RCRA Disposal Facility 5-22
5.5.5 Public Protection and Worker Safety During Excavation and Shipping 5-23
5.5.6 Residual Risk 5-25
5.5.7 Estimated Remediation Cost 5-25

TABLE OF CONTENTS (Continued)

Page

5.6 EXCAVATE AND ABOVE-GROUND SOIL AERATION (S5) 5-27

5.6.1 Action-Specific ARARs 5-27
5.6.2 Pre-Excavation Activities 5-28
5.6.3 Excavation 5-29
5.6.4 Treatment Process 5-30
5.6.5 Air Pollution Impacts and Disposal of Spent Activated Carbon. 5-34
5.6.6 Public Protection and Worker Safety During Remediation 5-35
5.6.7 Residual Risk 5-35
5.6.8 Estimated Remediation Cost 5-36

5.7 DESCRIPTION OF IN SITU SOIL AERATION (S6) 5-36

5.7.1 Pre-Construction Activities 5-36
5.7.2 Injection/Extraction Well Field 5-38
5.7.3 Extracted Air Treatment 5-42
5.7.4 Time Required to Complete Remediation 5-43
5.7.5 Post-Remediation Confirmatory Sampling 5-43
5.7.6 Action-Specific ARARs 5-44
5.7.7 Public Safety and Worker Safety During Remediation 5-44
5.7.8 Residual Risk 5-45
5.7.9 Estimated Remediation Costs 5-45

5.8 EVALUATION AND COMPARISON OF SOIL REMEDIATION ALTERNATIVES 5-45

6.0 DETAILED ANALYSIS OF GROUNDWATER ALTERNATIVES 6-1

6.1 EVALUATION CRITERIA 6-1
6.2 RESULTS OF GROUNDWATER MODELING 6-1
6.3 DESCRIPTION OF "NO ACTION" ALTERNATIVE G1 6-14

6.3.1 Groundwater Monitoring 6-14
6.3.2 Residual Risk 6-15
6.3.3 Estimated Cost 6-16

6.4 DESCRIPTION OF GROUNDWATER EXTRACTION ALONG I-5 , AIR STRIPPING, AND RECHARGE (ALTERNATIVE G2) 6-16

6.4.1 Action-Specific ARARs 6-16
6.4.2 Access Restrictions 6-18
6.4.3 Groundwater Monitoring 6-19
6.4.4 Pre-Construction Activities 6-19
6.4.5 Extraction System 6-19
6.4.6 Treatment System 6-24
6.4.7 Recharge System 6-27

TABLE OF CONTENTS (Continued)

Page

6.4.8 Public Protection and Worker Safety During Construction and Remediation 6-30
6.4.9 Residual Risk 6-32
6.4.10 Estimated Remediation Cost 6-32

6.5 DESCRIPTION OF COMBINED GROUNDWATER EXTRACTION ALONG I-5 AND NEAR SOURCE AREAS; AIR STRIPPING; AND RECHARGE (ALTERNATIVE G3) 6-37

6.5.1 Action-Specific ARARs 6-37
6.5.2 Pre-Construction Activities 6-37
6.5.3 I-5 Extraction System 6-38
6.5.4 Source Area Extraction System 6-38
6.5.5 I-5 Treatment System 6-40
6.5.6 Source Area Treatment System 6-40
6.5.7 I-5 Recharge System 6-44
6.5.8 Source Area Recharge System 6-45
6.5.9 Public Protection and Worker Safety During Construction and Remediation 6-47
6.5.10 Residual Risk 6-49
6.5.11 Estimated Remediation Cost 6-50

6.7 EVALUATION OF ALTERNATIVES 6-50
6.8 SUMMARY OF GROUNDWATER DETAILED ANALYSIS 6-50

7.0 REFERENCES 7-1

APPENDIX A - EVALUATION OF REMEDIAL TECHNOLOGIES AND PROCESS OPTIONS

APPENDIX B - EVALUATION OF REMEDIAL ALTERNATIVES FOR SOIL SOURCE AREAS

APPENDIX C - EVALUATION OF PROCESS OPTIONS AS PART OF DEVELOPMENT OF GROUNDWATER ALTERNATIVES

APPENDIX D - DETAILED EVALUATION OF SOIL SOURCE AREA REMEDIATION ALTERNATIVES

APPENDIX E - DETAILED EVALUATION OF GROUNDWATER REMEDIAL ALTERNATIVES

APPENDIX F - AIR MODELING METHODOLOGY

APPENDIX G - GROUNDWATER MODEL

APPENDIX H - RESIDUAL RISK ANALYSIS

LIST OF FIGURES

Figure No.		Page
1-1	SITE LOCATION MAP	1-3
1-2	FORT LEWIS LOGISTICS CENTER SITE MAP	1-4
1-3	PRELIMINARY HYDROGEOLOGIC PROFILE	1-7
1-4	LOCATION OF POTENTIAL SOURCE AREAS	1-13
1-5	EAST GATE DISPOSAL YARD AND DRMO YARD SOIL GAS SAMPLE AND SOIL BORING LOCATIONS	1-17
1-6	HORIZONTAL EXTENT OF TCE CONTAMINATION IN THE UNCONFINED AQUIFER	1-22
3-1	SUMMARY OF THE FEASIBILITY STUDY PROCESS	3-2
3-2	DEVELOPMENT OF ALTERNATIVES FOR SOIL SOURCE AREA AND GROUNDWATER REMEDIATION	3-4
3-3	CONTAINMENT ALTERNATIVES: MULTI-MEDIA CAP DIAGRAM	3-11
3-4	CONTAINMENT ALTERNATIVES: CONCRETE CAP DIAGRAM	3-12
3-5	EXCAVATION AND SOIL DISPOSAL ALTERNATIVES: ONSITE LANDFILL PROCESS FLOW DIAGRAM	3-16
3-6	EXCAVATION AND SOIL DISPOSAL ALTERNATIVES: OFFSITE LANDFILL PROCESS DIAGRAM	3-17
3-7	EXCAVATION & TREATMENT ALTERNATIVES: SOIL WASHING PROCESS FLOW DIAGRAM	3-21
3-8	EXCAVATION & TREATMENT ALTERNATIVES: SOIL AERATION SYSTEM	3-23
3-9	EXCAVATION & TREATMENT ALTERNATIVES: SOIL STABILIZATION AND BACKFILLING PROCESS FLOW DIAGRAM	3-24
3-10	IN SITU SOIL TREATMENT ALTERNATIVES: IN SITU SOIL AERATION PROCESS FLOW DIAGRAM	3-28
3-11	IN SITU SOIL TREATMENT ALTERNATIVES: IN SITU AGITATION PROCESS FLOW DIAGRAM	3-29
3-12	IN SITU SOIL TREATMENT ALTERNATIVES: IN SITU STABILIZATION PROCESS FLOW DIAGRAM	3-31

LIST OF FIGURES (Continued)

Figure No.		Page
4-1	DEVELOPMENT OF GROUNDWATER ALTERNATIVE G1	4-2
4-2	DEVELOPMENT OF GROUNDWATER ALTERNATIVE G2	4-4
4-3	DEVELOPMENT OF GROUNDWATER ALTERNATIVE G3	4-5
4-4	AIR STRIPPER SYSTEM FOR GROUNDWATER EXTRACTION ALONG I-5	4-10
4-5	CARBON ADSORPTION SYSTEM FOR GROUNDWATER EXTRACTION ALONG I-5	4-13
4-6	OZONATION/PEROXIDATION SYSTEM FOR GROUNDWATER EXTRACTION ALONG I-5	4-16
4-7	CROSS-SECTION OF PIPE TRENCH	4-22
4-8	RECHARGE PIPING SCHEMATIC FOR I-5 RECHARGE SYSTEM	4-26
4-9	RECHARGE TRENCH CROSS SECTION	4-27
4-10	AIR STRIPPER SYSTEM FOR GROUNDWATER EXTRACTION NEAR SOURCE AREAS	4-31
4-11	CARBON ADSORPTION SYSTEM FOR GROUNDWATER EXTRACTION NEAR SOURCE AREAS	4-34
4-12	OZONATION/PEROXIDATION SYSTEM FOR GROUNDWATER EXTRACTION NEAR SOURCE AREAS	4-37
4-13	RECHARGE PIPING SCHEMATIC FOR SOURCE AREA RECHARGE SYSTEM	4-46
5-1	CONCRETE CAP REMEDIATION ALTERNATIVE DIAGRAM	5-16
5-2	ESTIMATED ANNUAL AVERAGE TCE IMPACTS DURING EAST GATE DISPOSAL YARD EXCAVATION	5-24
5-3	ABOVE-GROUND SOIL AERATION SYSTEM	5-31
5-4	ABOVE-GROUND SOIL AERATION PROCESS FLOW DIAGRAM	5-32
5-5	IN SITU AERATION PROCESS FLOW DIAGRAM	5-41
6-1	ALTERNATIVE G-1 TCE CONCENTRATION AFTER 30 YEARS WITH NO REMEDIATION	6-3
6-2	ALTERNATIVE G2 TCE CONCENTRATION AT START OF PUMPING	6-6

LIST OF FIGURES (Continued)

Figure No.		Page
6-3	ALTERNATIVE G2 TCE CONCENTRATION AFTER 10 YEARS OF PUMPING	6-7
6-4	ALTERNATIVE G2 TCE CONCENTRATION AFTER 20 YEARS OF PUMPING	6-8
6-5	ALTERNATIVE G2 TCE CONCENTRATION AFTER 30 YEARS OF PUMPING	6-9
6-6	ALTERNATIVE G3 TCE CONCENTRATION AT START OF PUMPING	6-10
6-7	ALTERNATIVE G3 TCE CONCENTRATION AFTER 10 YEARS OF PUMPING	6-11
6-8	ALTERNATIVE G3 TCE CONCENTRATION AFTER 20 YEARS OF PUMPING	6-12
6-9	ALTERNATIVE G3 TCE CONCENTRATION AFTER 30 YEARS OF PUMPING	6-13
6-10	PLAN VIEW OF EXTRACTION AND RECHARGE SYSTEM FOR ALTERNATIVE G2	6-20
6-11	FORT LEWIS EXTRACTION WELL PROPOSED DESIGN	6-22
6-12	CROSS SECTION OF PIPE TRENCH	6-23
6-13	ALTERNATIVE G2 TREATMENT SYSTEM	6-25
6-14	RECHARGE PIPING SCHEMATIC FOR I-5 RECHARGE SYSTEM	6-28
6-15	RECHARGE TRENCH CROSS SECTION	6-29
6-16	PREDICTED ANNUAL AVERAGE AMBIENT TCE CONCENTRATIONS FOR ALTERNATIVE G2	6-31
6-17	PLAN VIEW OF EXTRACTION AND RECHARGE SYSTEM FOR ALTERNATIVE G3	6-39
6-18	ALTERNATIVE G3 - I-5 TREATMENT SYSTEM	6-41
6-19	ALTERNATIVE G3 SOURCE AREA TREATMENT SYSTEM	6-42
6-20	RECHARGE PIPING SCHEMATIC FOR SOURCE AREA RECHARGE SYSTEM	6-46
6-21	PREDICTED ANNUAL AVERAGE AMBIENT TCE VAPOR CONCENTRATIONS FOR ALTERNATIVE G3	6-48

LIST OF TABLES

Table No.		Page
ES-1	SOIL PROCESS OPTIONS REMAINING AFTER PROCESS OPTION EVALUATION	ES-3
ES-2	GROUNDWATER PROCESS OPTIONS REMAINING AFTER PROCESS OPTION EVALUATION	ES-5
ES-3	FINAL CANDIDATE ALTERNATIVES FOR SOURCE AREA REMEDIATION	ES-6
ES-4	FINAL CANDIDATE ALTERNATIVES FOR GROUNDWATER REMEDIATION	ES-7
ES-5	SUMMARY OF SOURCE AREA DETAILED ANALYSIS	ES-8
ES-6	SUMMARY OF GROUNDWATER DETAILED ANALYSIS	ES-9
1-1	DESCRIPTION OF GEOLOGIC UNITS	1-6
1-2	RESULTS OF CHEMICAL ANALYSES FOR TCE AND DCE IN SOIL FROM EAST GATE DISPOSAL YARD SOIL BORINGS	1-18
1-3	RESULTS OF CHEMICAL ANALYSES FOR HAZARDOUS SUBSTANCE LIST (HSL) PARAMETERS FOR SOIL SAMPLES FROM EAST GATE DISPOSAL YARD	1-19
1-4	SURFACE WATER SAMPLE DATA	1-26
1-5	BOTTOM SEDIMENT SAMPLE DATA	1-27
1-6	ON-SITE WORKER RISK	1-29
1-7	OFF-SITE RESIDENT RISK	1-30
1-8	DANGEROUS WASTE DETERMINATION FOR CONTAMINATED SOILS	1-38
1-9	CRITERIA FOR APPLICABILITY OF LAND DISPOSAL BAN OF SOLVENT-CONTAINING WASTES	1-43
1-10	ON-SITE WORKER RISK AND REMEDIAL ACTION OBJECTIVES	1-49
1-11	OFF-SITE RESIDENT RISK AND REMEDIAL ACTION OBJECTIVES	1-50
2-1	GENERAL RESPONSE ACTIONS FOR THE FORT LEWIS LOGISTICS CENTER	2-2
2-2	SUMMARY OF SOIL REMEDIAL ACTION OBJECTIVES, GENERAL RESPONSE ACTIONS, REMEDIAL TECHNOLOGY TYPES, AND PROCESS OPTIONS	2-3

LIST OF TABLES (Continued)

Table No.		Page
2-3	SUMMARY OF GROUNDWATER REMEDIAL ACTION OBJECTIVES, GENERAL RESPONSE ACTIONS, REMEDIAL TECHNOLOGY TYPES, AND PROCESS OPTIONS	2-6
2-4	INITIAL SCREENING OF SOIL TECHNOLOGIES AND PROCESS OPTIONS	2-9
2-5	SOIL PROCESS OPTIONS REMAINING AFTER INITIAL SCREENING	2-15
2-6	INITIAL SCREENING OF GROUNDWATER TECHNOLOGIES AND PROCESS OPTIONS	2-17
2-7	GROUNDWATER PROCESS OPTIONS REMAINING AFTER INITIAL SCREENING	2-26
2-8	EVALUATION OF SOIL PROCESS OPTIONS	2-29
2-9	EVALUATION OF GROUNDWATER PROCESS OPTIONS	2-37
2-10	SOIL PROCESS OPTIONS REMAINING AFTER PROCESS OPTION EVALUATION	2-42
2-11	GROUNDWATER PROCESS OPTIONS REMAINING AFTER PROCESS OPTION EVALUATION	2-44
3-1	SUMMARY DESCRIPTIONS OF REMEDIATION ALTERNATIVES	3-5
3-2	EVALUATION OF TREATMENT OPTIONS FOR SOIL SOURCE AREA REMEDIATION: CONTAINMENT ALTERNATIVES	3-13
3-3	EVALUATION OF TREATMENT OPTIONS FOR SOIL SOURCE AREA REMEDIATION: EXCAVATION AND SOIL DISPOSAL ALTERNATIVES	3-18
3-4	EVALUATION OF TREATMENT OPTIONS FOR SOIL SOURCE AREA REMEDIATION: ABOVE-GROUND SOIL TREATMENT ALTERNATIVES	3-25
3-5	EVALUATION OF TREATMENT OPTIONS FOR SOIL SOURCE AREA REMEDIATION: IN SITU SOIL TREATMENT ALTERNATIVES	3-32
3-6	SUMMARY COMPARISON OF SOIL SOURCE AREA REMEDIATION ALTERNATIVES SELECTED FOR DETAILED EVALUATION	3-35
3-7	FINAL CANDIDATE ALTERNATIVES FOR SOURCE AREA REMEDIATION	3-38
4-1	DESIGN CRITERIA AND DESIGN VALUES FOR AIR STRIPPER SYSTEM FOR GROUNDWATER EXTRACTION ALONG I-5	4-11

LIST OF TABLES (Continued)

Table No.		Page
4-2	DESIGN CRITERIA AND DESIGN VALUES FOR CARBON ADSORPTION SYSTEM FOR GROUNDWATER EXTRACTION ALONG I-5	4-14
4-3	DESIGN CRITERIA AND DESIGN VALUES FOR OZONATION/ PEROXIDATION SYSTEM FOR GROUNDWATER EXTRACTION ALONG I-5	4-17
4-4	EVALUATION OF TREATMENT OPTIONS FOR GROUNDWATER EXTRACTION ALONG I-5	4-19
4-5	EVALUATION OF DISPOSAL OPTIONS FOR GROUNDWATER EXTRACTION ALONG I-5	4-28
4-6	DESIGN CRITERIA AND DESIGN VALUES FOR AIR STRIPPER SYSTEM FOR GROUNDWATER EXTRACTION NEAR SOURCE AREAS	4-32
4-7	DESIGN CRITERIA AND DESIGN VALUES FOR CARBON ADSORPTION SYSTEM FOR GROUNDWATER EXTRACTION NEAR SOURCE AREAS	4-35
4-8	DESIGN CRITERIA AND DESIGN VALUES FOR OZONATION/ PEROXIDATION SYSTEM FOR GROUNDWATER EXTRACTION NEAR SOURCE AREAS	4-38
4-9	EVALUATION OF TREATMENT OPTIONS FOR COMBINED GROUNDWATER EXTRACTION ALONG I-5 AND NEAR SOURCE AREAS	4-39
4-10	EVALUATION OF DISPOSAL OPTIONS FOR COMBINED GROUNDWATER EXTRACTION ALONG I-5 AND NEAR SOURCE AREAS	4-48
4-11	SUMMARY OF EVALUATION OF TREATMENT OPTIONS FOR GROUNDWATER EXTRACTION ALONG I-5	4-51
4-12	SUMMARY OF EVALUATION OF DISPOSAL OPTIONS FOR GROUNDWATER EXTRACTION ALONG I-5	4-53
4-13	SUMMARY OF EVALUATION OF TREATMENT OPTIONS FOR COMBINED GROUNDWATER EXTRACTION ALONG I-5 AND NEAR SOURCE AREAS	4-56
4-14	SUMMARY OF EVALUATION OF DISPOSAL OPTIONS FOR COMBINED GROUNDWATER EXTRACTION ALONG I-5 AND NEAR SOURCE AREAS	4-59
4-15	FINAL CANDIDATE ALTERNATIVES	4-61

LIST OF TABLES (Continued)

Table No.		Page
5-1	CRITERIA FOR DETAILED ANALYSIS OF ALTERNATIVES	5-2
5-2	RESIDUAL POST-REMEDIATION RISKS FROM EXPOSURE TO CONTAMINATED SOILS UNDER THE S2 ALTERNATIVE	5-13
5-3	ROUGH ORDER OF MAGNITUDE COST FOR CONCRETE CAP (+50%, -30%)	5-19
5-4	ROUGH ORDER OF MAGNITUDE COSTS (+50%, -30%) FOR SOIL EXCAVATION AND DISPOSAL	5-26
5-5	ROUGH ORDER OF MAGNITUDE COSTS FOR ABOVE-GROUND SOIL AERATION (+50%, -30%)	5-37
5-6	ASSUMED DESIGN VALUES FOR IN SITU AERATION SYSTEM	5-44
5-7	ROUGH ORDER OF MAGNITUDE COSTS (+50%, -30%) FOR FOR IN SITU AERATION	5-46
5-8	EVALUATIONS FOR "SHORT TERM EFFECTIVENESS DURING CONSTRUCTION"	5-47
5-9	EVALUATIONS FOR "LONG TERM EFFECTIVENESS"	5-49
5-10	EVALUATIONS FOR "REDUCTION OF TOXICITY, MOBILITY, AND VOLUME"	5-51
5-11	EVALUATIONS OF SOIL REMEDIATION ALTERNATIVES FOR "IMPLEMENTABILITY"	5-53
5-12	EVALUATIONS OF SOIL REMEDIATION ALTERNATIVES FOR "COMPLIANCE WITH ARARs"	5-55
5-13	EVALUATIONS OF SOIL REMEDIATION ALTERNATIVES FOR "PROTECTION OF HUMAN HEALTH AND THE ENVIRONMENT"	5-56
5-14	COMPARISON OF RATINGS FOR SOURCE AREA REMEDIATION ALTERNATIVES	5-58
6-1	ROUGH ORDER OF MAGNITUDE COSTS (+50%, -30%) OF "NO ACTION" ALTERNATIVE G1	6-17
6-2	DESIGN CRITERIA AND DESIGN VALUES FOR TREATMENT SYSTEM FOR GROUNDWATER EXTRACTION ALONG I-5	6-26
6-3	ROUGH ORDER OF MAGNITUDE CAPITAL COSTS (+50%, -30%) FOR ALTERNATIVE G2	6-33
6-4	ROUGH ORDER OF MAGNITUDE OPERATING COSTS (+50%, -30%) FOR ALTERNATIVE G2	6-35

LIST OF TABLES (Continued)

Table No.		Page
6-5	SUMMARY OF ROUGH ORDER OF MAGNITUDE COSTS (+50%, -30%) FOR ALTERNATIVE G2	6-36
6-6	DESIGN CRITERIA AND DESIGN VALUES FOR SOURCE AREA TREATMENT SYSTEM	6-43
6-7	RESIDUAL RISKS ASSOCIATED WITH THE G3 WATER REMEDIAL ALTERNATIVE	6-49
6-8	ROUGH ORDER OF MAGNITUDE CAPITAL COSTS (+50%, -30%) FOR ALTERNATIVE G3	6-51
6-9	ROUGH ORDER OF MAGNITUDE OPERATING COSTS (+50%, -30%) FOR ALTERNATIVE G3	6-55
6-10	SUMMARY OF ROUGH ORDER OF MAGNITUDE COSTS (+50%, -30%) FOR ALTERNATIVE G3	6-57
6-11	EVALUATION OF GROUNDWATER REMEDIATION ALTERNATIVES FOR "SHORT-TERM PROTECTION DURING CONSTRUCTION"	6-58
6-12	EVALUATION OF GROUNDWATER REMEDIATION ALTERNATIVES FOR "LONG-TERM PROTECTION"	6-59
6-13	EVALUATION OF GROUNDWATER REMEDIATION ALTERNATIVES FOR "REDUCTION OF TOXICITY, MOBILITY, OR VOLUME"	6-60
6-14	EVALUATION OF GROUNDWATER REMEDIATION ALTERNATIVES FOR "IMPLEMENTABILITY"	6-62
6-15	EVALUATION OF GROUNDWATER REMEDIATION ALTERNATIVES FOR "COMPLIANCE WITH ARARs"	6-63
6-16	EVALUATION OF GROUNDWATER REMEDIATION ALTERNATIVES FOR "OVERALL PROTECTION"	6-64
6-17	SUMMARY OF ROUGH ORDER OF MAGNITUDE COSTS (+50%, -30%) FOR GROUNDWATER REMEDIATION ALTERNATIVES	6-65
6-18	SUMMARY OF GROUNDWATER DETAILED ANALYSES	6-66

GLOSSARY

Alternatives	-	combinations of process options that address the site as a whole.
General Response Actions	-	general categories of actions (e.g., institutional, containment, treatment, disposal) that will satisfy one or more of the remedial action objectives.
Process Options	-	specific processes within a technology type. For example, chemical oxidation would be a process option under the broader category of chemical treatment.
Remedial Action Objectives	-	goals for protecting human health or the environment.
Technology Types	-	general categories of technologies or actions within a general response action, such as access restrictions, capping, chemical treatment, or off-site disposal.

EXECUTIVE SUMMARY

Ebasco Environmental, a division of Ebasco Services Incorporated, in association with Shannon and Wilson, Inc., was selected by the Seattle District, U.S. Army Corps of Engineers to perform a Remedial Investigation/Feasibility Study (RI/FS) of soil, surface water, and groundwater contamination at the Fort Lewis Logistics Center. This document was prepared by the Department of the Army, the Seattle District Corps of Engineers, Ebasco Environmental, and Shannon & Wilson, Inc. A Federal Facilities Interagency Agreement between the Department of the Army, the U.S. Environmental Protection Agency (EPA) Region 10, and the Washington Department of Ecology (WDOE) became effective January 29, 1990. Under the agreement, EPA and WDOE have reviewed and commented on the Feasibility Study. Their comments have been incorporated into the document.

The Fort Lewis Logistics Center was placed on the National Priorities List (NPL) in December 1989. The RI/FS was initiated in 1986 to characterize site contamination. Results of the RI are presented in the Remedial Investigation (Envirosphere 1988b). The FS focuses on cleanup of contamination identified in the shallow unconfined aquifer flowing from the Logistics Center towards American Lake and on cleanup of contaminated soils at the East Gate Disposal Yard. Limited studies of the lower aquifers indicate that some trichloroethylene (TCE) contamination exists. However, there is insufficient data on the extent of lower aquifer contamination to address the issue in this FS. The Army will be investigating contamination in the lower aquifer in more detail. Sampling and analysis of the groundwater in the lower aquifer will begin in the fall of 1990. Remedial action objectives developed for the shallow unconfined aquifer will apply to any contamination found in the lower aquifers. Remediation of contamination found in lower aquifers will be incorporated into the remedial design/remedial action phases of the Logistics Center.

The purposes of the FS were to establish remedial objectives for cleanup of the shallow groundwater plume and for cleanup of the contaminated soils at the East Gate Disposal Yard, and then to evaluate a range of remedial alternatives for the soil and groundwater cleanup. The FS was conducted by completing the following steps:

- Review the results of the Remedial Investigation to establish the extent of contamination in the soil, surface water, and groundwater.

- Establish the remedial action objectives for soil, surface water, and groundwater cleanup.

- Conduct a Preliminary Screening of Remedial Technologies to identify the viable treatment technologies that are suitable for groundwater and soil remediation at the Logistics Center. The viable treatment technologies are listed in Tables ES-1 and ES-2 for the source areas and the groundwater.

- Group the viable treatment technologies into a wide range of remedial alternatives for soil cleanup and groundwater cleanup. The remedial alternatives were developed by grouping the viable technologies and then briefly evaluating and comparing them to each other. The remedial alternatives listed in Tables ES-3 and ES-4 were selected for detailed evaluation.

- Prepare feasibility-level engineering designs and cost estimates for each of the remedial alternatives. Conduct a detailed evaluation of each alternative using the following criteria: short term effectiveness during construction; long term effectiveness; reduction in toxicity, mobility and volume; ease of implementability; protection of public health and the environment; compliance with applicable regulations (ARARs); and cost.

The results of the detailed evaluations for each of the alternatives are summarized in Tables ES-5 and ES-6.

TABLE ES-1

SOIL PROCESS OPTIONS REMAINING

AFTER PROCESS OPTION EVALUATION

Soil General Response Action	Technology Type	Process Option
No Action	None	Not Applicable
Institutional	Access Restrictions	Deed Restrictions Administrative Controls Physical Controls (e.g., fence)
	Monitoring	Monitoring Wells
Containment	Capping	Concrete Multi-Media
	Surface Controls	Grading Revegetation Capping (see above)
Removal/Disposal of Contaminated Soil	Excavation	Bulldozers, Backhoes, Cranes, and Attachments
	Dewatering	Well Points
	Moving Equipment	Bulldozers Loaders
	Long-Distance Hauling	Truck
	On-Site Disposal	RCRA-type Landfill
	Off-Site Disposal	RCRA Hazardous Waste Disposal Facility
Removal/Treatment/ Disposal	Excavation	Bulldozers, Backhoes, Cranes, and Attachments
	Dewatering	Well Points
	Moving Equipment	Bulldozers Loaders
	Long-Distance Hauling	Truck

TABLE ES-1 (Cont.)

SOIL PROCESS OPTIONS REMAINING

AFTER PROCESS OPTION EVALUATION

Soil General Response Action	Technology Type	Process Option
Removal/Treatment/ Disposal (Cont.)	Physical Treatment	Soil Washing Soil Aeration
	Immobilization	Stabilization
	On-Site Disposal	Recycling
In Situ Treatment	Physical Treatment	Soil Aeration Soil Mixing/Aeration
	Immobilization	Soil Mixing/Stabilization

TABLE ES-2

GROUNDWATER PROCESS OPTIONS REMAINING

AFTER PROCESS OPTION EVALUATION

Groundwater General Response Action	Technology Type	Process Option
No Action	None	Not Applicable
Institutional	Access Restrictions	Deed Restrictions[a/] Administrative Controls[a/]
	Monitoring	Monitoring Wells[a/]
Containment	Vertical Barriers	Hydraulic Gradient Control[b/]
Collection/Treatment/ Discharge	Extraction	Deep Wells
	Physical Treatment	Adsorption Air Stripping Flow Equalization
	Chemical Treatment	Chemical Oxidation/ Ultraviolet Light
	On-Site Discharge	Storm Sewer Recharge Reuse/Recycle
	Off-Site Discharge	Pumping to Surface Water Reuse/Recycle

a/ These options retained for use in combination with pump and treat alternatives.

b/ Hydraulic gradient control consists of groundwater pumping in combination with recharge. In the rest of the report, this option is called recharge of treated groundwater.

TABLE ES-3

FINAL CANDIDATE ALTERNATIVES
FOR SOIL SOURCE AREA REMEDIATION

Alternative Number	Description of Alternative
S1	No Action Monitoring Wells
S2	Institutional Actions Deed Restrictions Administrative Controls Monitoring Wells Physical Controls (e.g., fence)
S3	Containment Concrete Cap Administrative Controls Monitoring Wells
S4	Excavation and Disposal Off-site Landfill
S5	Excavation and Treatment Above-Ground Soil Aeration and Backfill Administrative Controls Monitoring Wells
S6	*In Situ* Treatment Soil Aeration Administrative Controls Monitoring Wells

TABLE ES-4

FINAL CANDIDATE ALTERNATIVES
FOR GROUNDWATER REMEDIATION

Alternative #	Description of Alternative
G1	No Action Monitoring Wells
G2	Groundwater Extraction Along I-5 Air Stripping Recharge Deed Restrictions Administrative Controls Monitoring Wells Flow Equalization
G3	Groundwater Extraction Along I-5 and Near Source Areas Air Stripping Recharge Deed Restrictions Administrative Controls Monitoring Wells Flow Equalization

TABLE ES-5

SUMMARY OF SOURCE AREA DETAILED ANALYSIS

Evaluation Criterion	No Action	Institutional Controls	Concrete Cap	Excavate/ Off-site Landfill	In Situ Aeration	Excavate/ Above Ground Aeration
Short Term Effectiveness During Construction	High	High	High	Low	Medium	Medium
Long Term Effectiveness	Low	Medium	High	High	High	High
Reduction of Toxicity, Mobility and Volume	Low	Low	Medium	Medium	High	High
Implementability	High	High	High	Medium	Medium	Medium
Compliance with ARARs	High	High	High	Medium	High	High
Support Agencies Acceptance[1/]						
Community Acceptance[1/]						
Protection of Human Health and Environment	Low	Medium	Medium	High	High	High
Estimated Costs						
o Capital	$ 0	$65,000	$921,000	$2,250,000	$815,000	$1,061,000
o Annual	2,500	2,500	5,000	0	0	0
o 30-yr Present Worth Cost (i=10%)	23,000	88,000	970,000	2,250,000	815,000	1,061,000
o 30-yr Present Worth Cost (i=4%)	$43,000	$108,000	$1,007,000	$2,250,000	$815,000	$1,061,000

1/ Support agencies and community acceptance will be discussed in the Record of Decision and the Responsiveness Summary.

7697K

TABLE ES-6

SUMMARY OF GROUNDWATER DETAILED ANALYSIS

Criteria	G-1: No Action	G-2: Extraction Along I-5, Air Stripping, and Recharge	G-3: Combined Extraction Along I-5 and near Source Areas, Air Stripping, and Recharge
Short-Term Effectiveness During Construction	High	High	High
Long-Term Effectiveness	Low	Medium	High
Reduction of Toxicity, Mobility, and Volume	Low	Medium	High
Implementability	High	Medium	Medium
Compliance with ARARs	Low	High	High
Protection of Human Health and Environment	Low	Medium	High
Support Agencies Acceptance 1/			
Community Acceptance 1/			
Capital Cost	0	$2,654,000	$4,014,000
Operating Costs	$32,240/yr 2/ $16,120/yr 3/	$354,000 4/	$517,000 4/
Net Present Worth (i=10%, n=30 yrs)	$180,000	$6,171,000 5/	$9,068,000 5/
Net Present Worth (i=4%, n=30 yrs)	$309,000	$9,084,000 5/	$13,263,000 5/

1/ Support agencies and community acceptance will be discussed in the Record of Decision and the Responsiveness Summary.
2/ Operating cost for first 2 years.
3/ Operating cost for remaining 28 years.
4/ Cost not including monitoring cost.
5/ Cost including monitoring cost.

7697K

1.0 INTRODUCTION

1.1 PURPOSE AND OVERVIEW

This report summarizes the results of the Feasibility Study for the Fort Lewis Logistics Center. The final alternatives which are proposed to manage the contaminated groundwater, soil, and surface water at the Logistics Center at Fort Lewis, Washington, are presented and evaluated.

Fort Lewis is located roughly 11 miles south of Tacoma, Washington. Trichloroethylene (TCE) was used extensively as a solvent at the Fort Lewis Logistics Center between 1942 and 1975. Used solvent sludges were treated and disposed of at the site. As a result, soil on the Logistics Center site and groundwater under the Logistics Center site have become contaminated.

The feasibility study serves as a framework for the identification, screening, and evaluation of process options; the combination of process options into alternatives; and the detailed evaluation of alternatives. The entire Feasibility Study process is described in the February 1988 Work Plan for the Fort Lewis Logistics Center Remedial Investigation/Feasibility Study (Envirosphere 1988a) as well as in published EPA guidelines (EPA 1985a). This process has been updated to include recent EPA guidelines (EPA 1988a).

The following is a summary of the contents of the report. Site background information including site location and description, site history, and community concerns is presented in Section 1.2. The nature and extent of the problem; the results of the risk assessment; applicable, relevant, and appropriate requirements (ARARs); and the remedial action objectives are presented in Sections 1.3, 1.4, 1.5, and 1.6, respectively. Section 2.0 describes the identification, screening, and evaluation of remedial technologies and process

options. Sections 3.0 and 4.0 describe the development of soil and groundwater alternatives, respectively. The detailed analysis of soil alternatives is presented in Section 5.0, and the detailed analysis of groundwater alternatives is presented in Section 6.0.

1.2 SITE BACKGROUND INFORMATION

This section includes a description of the site, the site history, and community relations.

1.2.1 Site Location and Description

1.2.1.1 Logistics Center Location

The Fort Lewis Logistics Center is located in Pierce County, Washington, about 11 miles south-southeast of Tacoma and about 17 miles east-northeast of Olympia (Figure 1-1 and 1-2). The Logistics Center occupies about 650 acres of the Fort Lewis Military Reservation, located in T 19 N, R 2 E, Sections 21, 22, 26 and 27. It is bounded on the northwest by Interstate 5 and beyond by the town of Tillicum; on the southwest by the Madigan Army Medical Center; and on the north by the American Lake Garden Tract. Tillicum occupies about 300 acres of T 19 N, R 2 E, Sections 15, 16, 21 and 22. Tillicum is bounded on the southeast by Interstate 5 and the Logistics Center; on the northwest by American Lake, on the northeast by the Tacoma Country Club, and on the southwest by the Washington National Guard's Camp Murray. Tillicum is included in the site description because the groundwater contaminant plume extends below the town.

1.2.1.2 Site Hydrogeology

The Logistics Center and Tillicum areas are situated on an extensive upland glacial drift plain which occupies much of central Pierce County. The drift plain originated from glacial and glaciofluvial processes associated with the Vashon Glaciation. The plain is bounded on the west by Puget Sound, and extends to the foothills of the Cascade

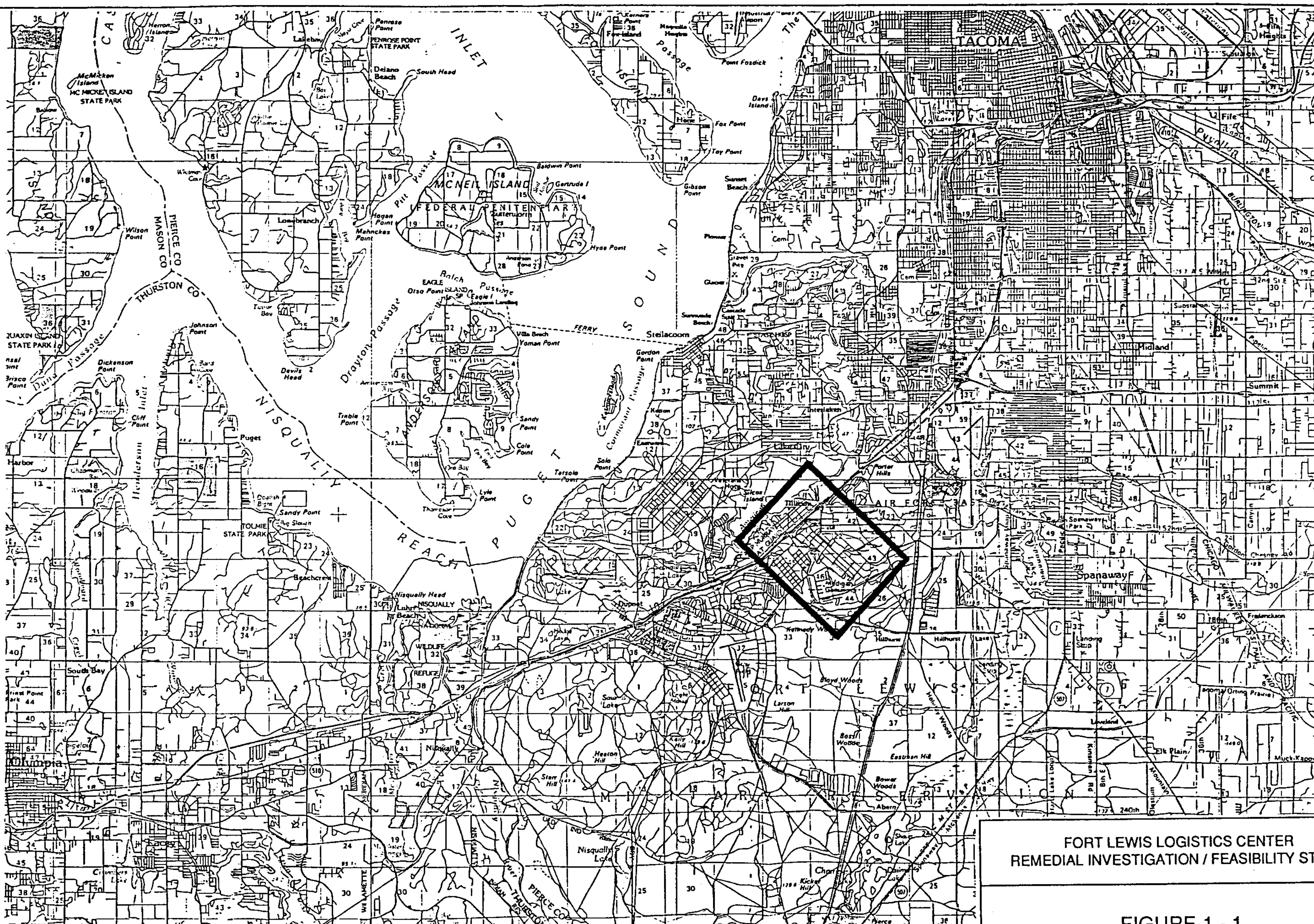

FORT LEWIS LOGISTICS CENTER
REMEDIAL INVESTIGATION / FEASIBILITY STUDY

FIGURE 1 - 1
SITE LOCATION MAP

Section No: 1
Revision No:
Revision Date: 1/89
Page of

envirosphere company
In association with
SHANNON & WILSON

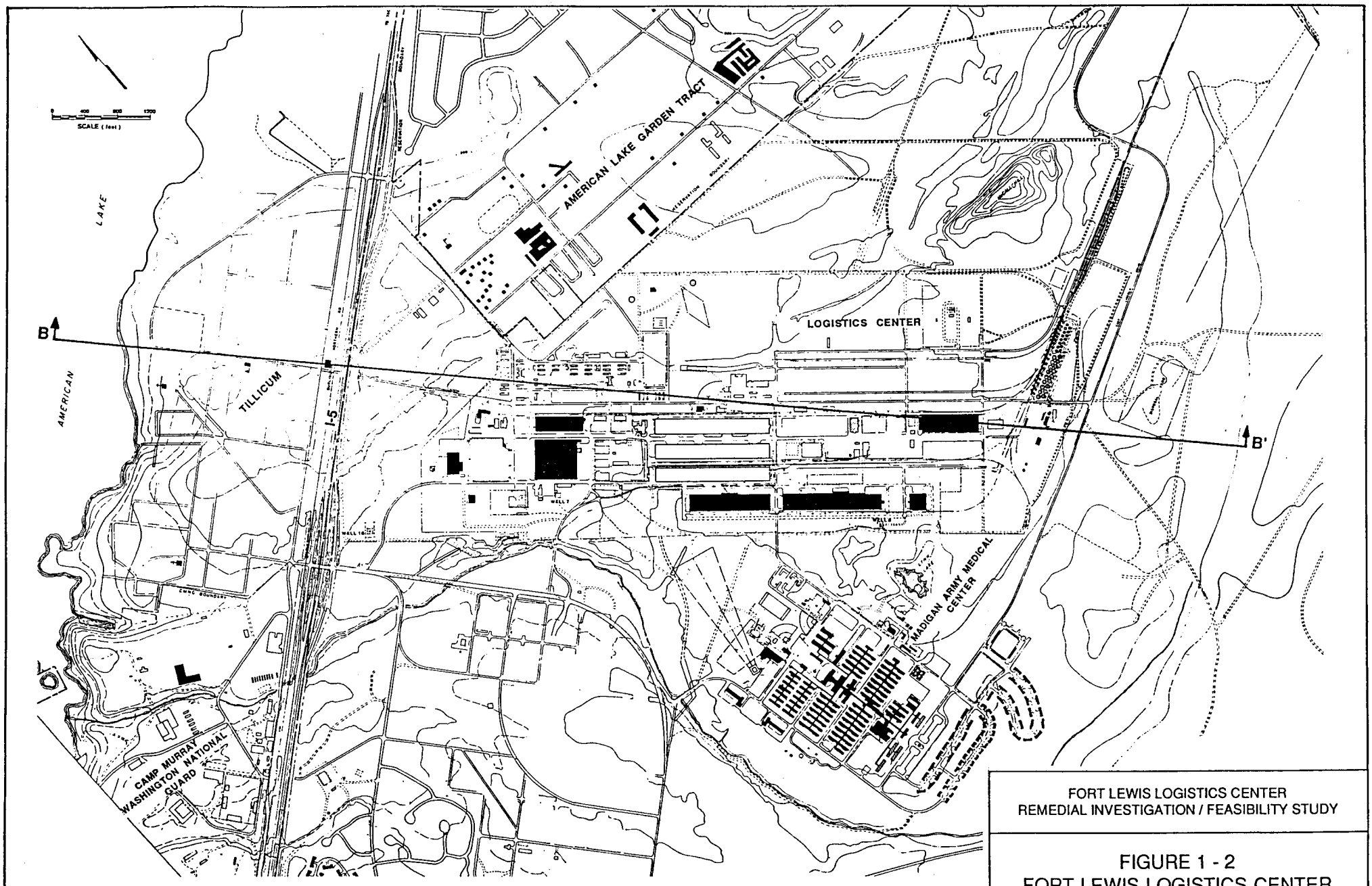

B B'
Cross-section shown in Figure 1 - 3

FORT LEWIS LOGISTICS CENTER
REMEDIAL INVESTIGATION / FEASIBILITY STUDY

FIGURE 1 - 2
FORT LEWIS LOGISTICS CENTER
SITE MAP

Section No: 1
Revision No: 0
Revision Date: 1/89
Page · of

envirosphere company
In association with
SHANNON & WILSON

Mountains to the east. Elevation of the study area ranges from about 235 feet above mean sea level at American Lake to about 290 feet at the southeast end of the Logistics Center, with some slightly higher hills adjacent to the Center. The drift plain is crossed by the Puyallup River to the north and east, and by the Nisqually River to the south, which provides the major drainage of the area. The study area has a poorly developed drainage system due to the high infiltration capacity of the soil and level topography. Murray Creek, which flows into American Lake, is the only perennial stream draining from the site vicinity.

The regional geology and hydrogeology surrounding the Fort Lewis Logistics Center has been interpreted from previous work in the site vicinity, notably the Clovers/Chambers Creek Report (Brown and Caldwell 1985), Walters and Kimmel (1968), and Shannon & Wilson (1986) and Envirosphere (1988b). A description of the geologic units is provided in Table 1-1.

A schematic of the Fort Lewis Logistics Center site hydrostratigraphy is shown in Figure 1-3 and described in Table 1-1. The geology of the Fort Lewis Logistics Center consists of a sequence of sand and gravel deposits with till layers (Vashon Drift) overlying a finer-grained nonglacial deposit (Kitsap Formation). The alternating layers of sand and gravel and finer-grained unconsolidated sediments found near the surface continue in a similar way to a depth of at least 2,000 feet. The thickness of the various sand and gravel deposits is quite variable.

The Vashon outwash sequence is, for the most part, highly permeable and contains the unconfined aquifer system beneath the site. The base of the aquifer is the relatively impermeable Kitsap Formation which is believed to underlie the entire Logistics Center site and surrounding area. The unconfined aquifer is continuous across the site; the water table for this system is found at depths between 7 and 35 ft below the surface. Its saturated thickness varies with the changing elevation of the aquifer base (Kitsap Formation) and the slope of the water table

TABLE 1-1 DESCRIPTION OF GEOLOGIC UNITS

GEOLOGIC/ STRATIGRAPHIC UNIT	SITE GEOLOGIC NAME		DESCRIPTION	HYDRO-STRATIGRAPHIC UNIT (B&C,1985)	SITE HYDROGEOLOGIC DESIGNATION
Recent	Recent Deposits	rd	Predominantly alluvial silt, sand, and gravel with lesser amounts of organic depression fillings	A	aquifer where saturated
Vashon Stade-Fraser Glaciation	Steilacoom Gravel	Qvs	Open-work coarse gravel with abundant cobbles	A	Vashon Drift/post-Kitsap Aquifer
	Vashon Till	Qvt	Very dense lodgement till: gravelly, clayey, sandy silt; and loose ablation till: gravelly, clayey, sandy silt	A	(Qvt-aquitard)
Vashon & pre-Vashon outwash	Glacial Outwash Sand	Gs	Predominantly stratified fine, medium, and coarse sand; interbeds of sandy gravel and lenses of silt	A	
	Glacial Outwash Gravel	Gg	Predominantly sandy gravel with lenses of gravelly sand and silty gravel	A	
pre-Vashon & post-Kitsap	Undifferentiated Till	tu	Lodgement till, glaciomarine drift (?), glaciolacustrine deposits, and lesser amounts of ablation till: predominantly very dense to hard, sandy silt and clayey silt	A	(tu-aquitard)
	Non-glacial Deposits	ng	Alluvial sand and gravel; and mudflow deposits: gravel and sand in a matrix of clay and silt	A-1	(ng-aquitard, in places)
Olympia Interglacial	Kitsap Formation	Qk	Non-glacial deposits of silt, sand, and clay; with scattered ash, wood and peat	B	Kitsap Aquitard
Salmon Springs Glaciation	Salmon Springs Recessional Outwash	Qssr	Stratified sand and gravel with silt and clay lenses	C	Salmon Springs Recessional Aquifer
	Salmon Springs Till	Qsst	Very dense, heterogeneous mixture of gravel, sand, clay, and silt	C	Salmon Springs Till Aquitard
	Salmon Springs Advance Outwash	Qssa	Stratified sand and gravel with silt and clay lenses	C	Salmon Springs Advance Aquifer
Puyallup Interglacial	Puyallup Formation	Qpy	Mudflows, ash, and alluvial deposits	D	Puyallup Aquitard
Stuck Glacial	Stuck Drift	Qst	Till, lacustrine silt and fine sand, glaciofluvial sand and gravel	E	Stuck Drift Aquifer

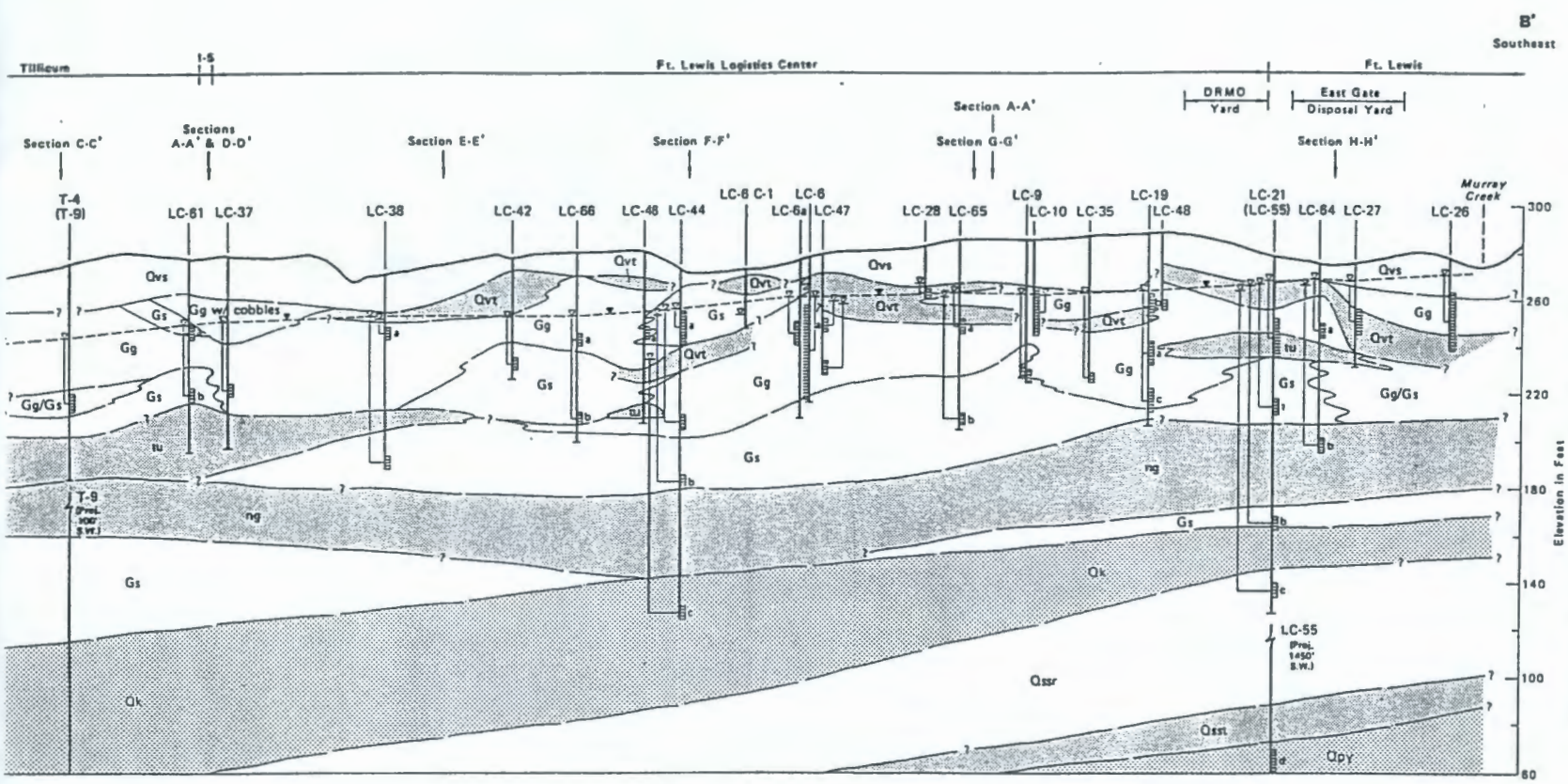

LEGEND

LC-29 Monitoring Well or Boring Designation and Location

Average Water Level (2/87 to 3/88) — Vashon Aquifer Water Table

Approximate Soil Contact

Slotted Pipe or Well Screen

NOTES

1. Geologic Unit descriptions are presented on Table 4-16.
2. Contacts between soil units were interpreted from boring data and well logs. Variations between the profile and actual conditions may exist.
3. Elevation data obtained from topographic map provided by Envirosphere Company and from elevation survey completed by Horton Dennis & Associates, Inc. (NGVD 1929).

GEOLOGIC UNITS

rd	Recent Deposits
Qvs	Steilacoom Gravel
Qvt	Vashon Till
Gs	Glacial Outwash Sand
Gg	Glacial Outwash Gravel
tu	Undifferentiated Till, Glaciomarine Drift, and Ablation Till
ng	Non-glacial Deposits and Mudflow Deposits
Qk	Kitsap Formation
Qssr	Salmon Springs Recessional Outwash Deposits
Qsst	Salmon Springs Till
Qssa	Salmon Springs Advance Outwash Deposits
Qpy	Puyallup Formation
	Unit With Aquitard Properties

Note: Refer to Figure 1 - 2 for cross-section location.

FORT LEWIS LOGISTICS CENTER
REMEDIAL INVESTIGATION / FEASIBILITY STUDY

FIGURE 1 - 3
PRELIMINARY HYDROGEOLOGIC PROFILE

Section No: 1
Revision No: 0
Revision Date: 1/89
Page of

envirosphere company
In association with
SHANNON & WILSON

toward American Lake. The saturated thickness of the aquifer is approximately 60-100 ft, and generally increases towards the northwest across the site. The thickness of the Kitsap Formation varies from 12 to 70 ft in the vicinity of the site.

Analysis of the water table elevations measured during the RI, including winter high water levels and the summer low levels (including levels probably affected by record drought conditions), show that the direction of groundwater movement is toward the northwest, along the longitudinal axis of the Logistics Center and toward American Lake. The analysis shows minor variations (mounding) in the water table which are probably caused by changes in groundwater flow due to variations in aquifer permeability and impacts from land use activities, such as leaking water or sewer lines, utility trenches and impermeable surface coverings. K-V Associates (1985) measured the velocity of the groundwater under the Logistics Center site and found it to be between 0.03 and 26 ft/day with the median being 1.5 ft/day. The average flow velocity was estimated to be about 5 to 7 ft/day. A corresponding estimate made by Ebasco Environmental in the Remedial Investigation Report (Envirosphere 1988b) found the flowrate to be between 0.02 and 2.0 feet per day. At a 1.5 ft/day flowrate, approximately 20 years are needed for the groundwater to travel the length of the Logistics Center. Contaminants may flow at a slower rate based on their chemical and physical properties.

Recharge to the aquifer occurs from the infiltration of precipitation into the permeable soil beneath and adjacent to the Logistics Center, and a substantial groundwater inflow from the southeast. Previous investigations have indicated that Murray Creek originates as groundwater discharge south of the Logistics Center, but further downstream the creek is apparently perched above the water table, and some leakage occurs from the creek to the water table.

1.2.2 Site History

The Fort Lewis Military Reservation was established in 1917 and has been in continuous use since. Initial development on the Logistics Center site began in 1941 with construction of the Fort Lewis Quartermaster Motor Base. The facility was activated in April 1942 and consisted of two shops, two warehouses, and 13 barracks. In August 1942, the facility was transferred to ordnance jurisdiction and renamed the Mount Rainier Ordnance Depot, which was operated until 1963. During this time, the facility furnished ordnance supplies, maintenance, and rebuild services. In 1963, the facility was turned over to the Logistics Center to serve as the primary nonaircraft maintenance facility for the post.

TCE was used historically at the Logistics Center in large quantities as a degreasing agent until the mid-1970's when its use was replaced by trichloroethane (TCA). The waste TCE was disposed at several locations with waste oils. Additional waste-related activities included caustic sodium hydroxide paint-stripping and battery acid neutralization.

The town of Tillicum has, since its establishment, consisted of a mixture of residential and commercial land uses. The only identified on-site potential sources of groundwater contamination are the domestic and commercial Tillicum septic systems and storm drain disposal systems, both of which discharge into the unconfined aquifer system. However, no evidence of TCE contamination sources from Tillicum was identified during the EPA's groundwater investigation (E&E 1986a) or previous studies by the Tacoma-Pierce County Health Department.

1.2.3 Community Relations

Tillicum area residents first became aware of the Logistics Center groundwater contamination in January 1985. At that time the Army announced that it had discovered traces of TCE in new test wells dug in and around the Logistics Center. This news was published in several

area newspapers. Wells of Tillicum residences used primarily for drinking were then sampled and showed contamination of TCE or 1,2-dichloroethylene (DCE). Residents with these contaminated wells were encouraged to hook up to the Lakewood Water District's system and most have since done so. However, nothing prevents residents from using their contaminated private wells.

Several newspaper articles appeared when the site investigation report was completed in August 1986. Generally, the papers reported that the TCE from the Logistics Center was a potential contamination threat to the Lakewood Water District's municipal well in Tillicum. However, local governmental representatives noted little public response to these media articles.

A Community Relations Plan was prepared in 1987 as part of the Management Plan for the RI/FS.

As part of the community relations program, at the beginning of the RI/FS information repositories were established at four locations:

Pierce County Library Tillicum Branch	Pierce County Library Lakewood Branch
Tacoma-Pierce County Health Department	Fort Lewis Public Affairs Office

These repositories contain site information documents and general information about the investigation and have been updated at regular intervals as new information or reports became available.

Three fact sheets and three press releases have been issued: (1) at the beginning of the RI/FS, in March 1987; (2) when the study was expanded to include Tillicum, in February 1988; and (3) to discuss the health risk assessment, in February 1989. Public workshops were held to coincide with fact sheets two and three. Both workshops were held

at the Tillicum/American Lake Gardens Community Service Center and coincided with regular monthly meetings held at the Center. An average of 20 to 40 people were in attendance at each workshop. Questions raised at these meetings included:

- How do you calculate cancer probability in the health risk assessment?

- What is the risk of cancer from exposure to TCE and DCE through swimming, eating fish from contaminated creeks and lakes, using well water to irrigate vegetables?

- When was the problem first discovered and how is the investigation being conducted?

- What happens if nothing is done?

Interviews recently were conducted in conjunction with the preparation of the community relations plan for a Superfund site on McChord AFB (the Washrack/Treatment Area). These included interviews with the Tillicum area's two state representatives, state senator, and representatives on the Pierce County Council. They were questioned about their concern with sites on both McChord and Fort Lewis during the course of the discussions. They felt hooking the Tillicum residents up to the Lakewood system relieved the immediate threat, and the RI/FS would correct the longer-range problems of the contaminated groundwater. However, these individuals did express general interest in and concern with the quality and quantity of water supplied to Lakewood and Tillicum as well as a desire to be kept informed of the cleanup process at the Fort Lewis Logistics Center/Tillicum site.

During a recent update of the information repositories, community relations staff inquired as to how many people had asked for information relating to the Fort Lewis Logistics Center. Those in charge of the repositories could recall no specific request.

Two newspaper articles concerning the site appeared in 1989: one announcing the naming of the Fort Lewis Logistics Center, along with several other state sites, to the NPL and another article announcing the signing of the interagency agreement.

1.3 NATURE AND EXTENT OF THE PROBLEM

Soil, groundwater, surface water, and sediment contamination are summarized from the results of the Remedial Investigation report (Envirosphere 1988b).

1.3.1 Source Area Contamination

Possible sources of the TCE that entered the groundwater have been identified and are associated with a variety of sites within the Logistics Center. These sites can be divided into three categories: 1) use areas, where TCE was used as part of the maintenance operations and resulted in waste TCE and POL (petroleum, oils, and lubricants) sludges which contained TCE; 2) storage areas, the storage of both unused TCE and waste TCE and POL sludge in various locations at the Logistics Center; and 3) disposal sites, where waste TCE and associated sludges were either actively disposed of on site or occasionally disposed of as a result of accidental spillage. These areas are summarized below. Buildings and areas referenced in this section are shown on Figure 1-4. A detailed summary of TCE use at the Logistics Center may be found in a report by Shannon and Wilson (1986). The potential source areas identified in the following paragraphs are based upon this report.

1.3.1.1 TCE Use Areas

Trichloroethylene (TCE) was used at the Fort Lewis Logistics Center as a cleaning, degreasing, and hand washing solvent at several locations and under various conditions. The resulting waste TCE was mixed with grease, oil, and other petroleum products. The waste material,

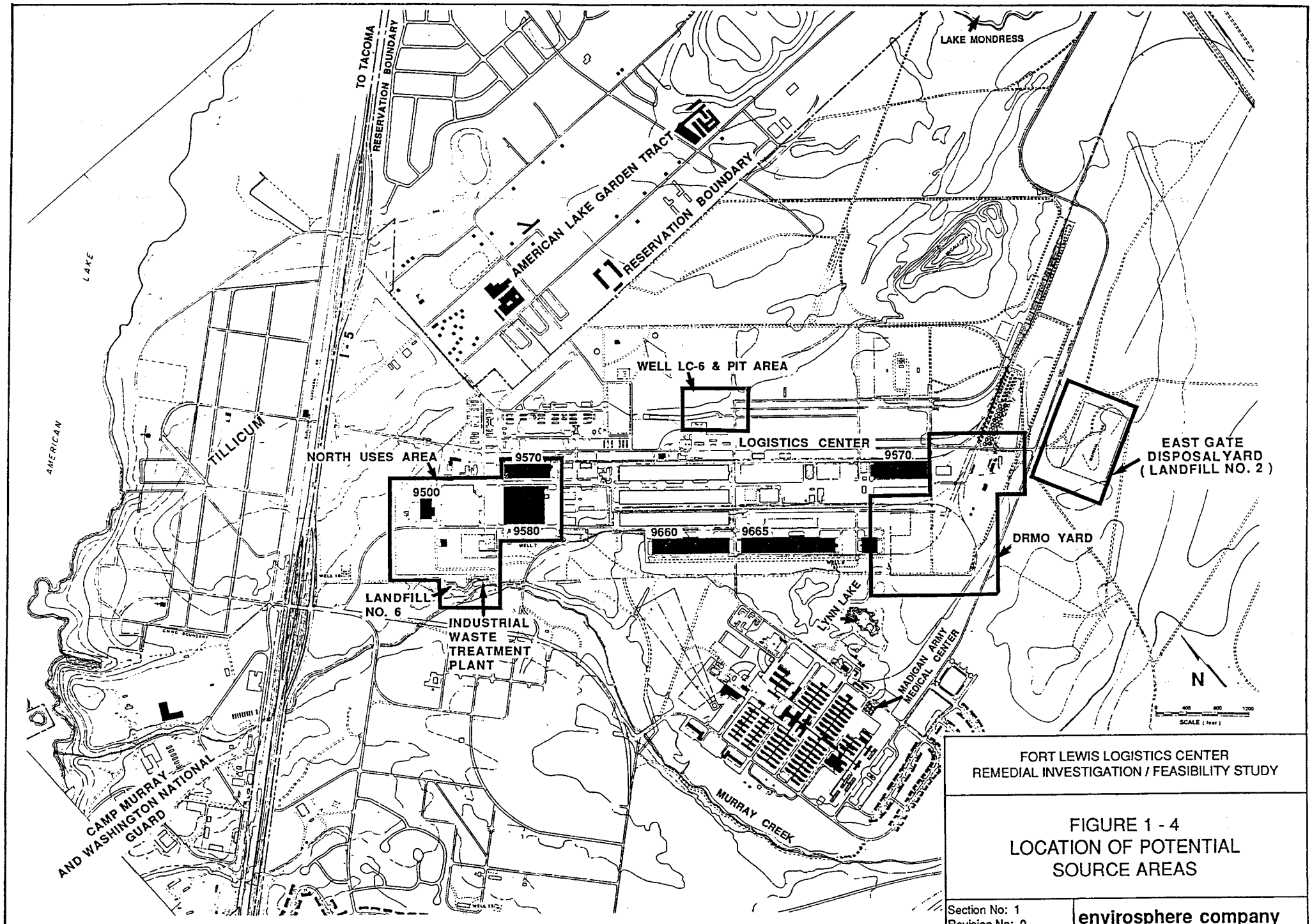

FORT LEWIS LOGISTICS CENTER
REMEDIAL INVESTIGATION / FEASIBILITY STUDY

FIGURE 1 - 4
LOCATION OF POTENTIAL
SOURCE AREAS

Section No: 1
Revision No: 0
Revision Date: 1/89
Page of

envirosphere company
In association with
SHANNON & WILSON

referred to as POL (petroleum, oil, lubricants), was commonly collected and stored in vats and drums for disposal. The use of TCE primarily occurred in Buildings 9580, 9570, and 9500, and over extensive open areas used for vehicle storage. The use of TCE as a solvent ceased in the mid-1970's when it was replaced with 1,1,1-trichloroethane (TCA).

1.3.1.2 TCE Storage Areas

Unused TCE was probably stored in barrels inside or adjacent to buildings 9570 and 9580. There is no indication of any buried storage tanks which held unused TCE or waste TCE and/or sludge. Waste TCE and sludge was also held in barrels and vats inside or adjacent to buildings 9570 and 9580 prior to removal from these buildings.

A known storage facility at the Logistics Center is the DRMO (Defense Reutilization and Marketing Office) Yard. The DRMO Yard has been used in the past as a holding area for barrels containing TCE until they were removed by a subcontractor. The amount of TCE and TCE mixed with POL previously held in storage in the yard is unknown. It has been reported that, in the past, up to one-quarter of the barrels of TCE held in storage in the yard showed noticeable leakage.

1.3.1.3 TCE Disposal Areas

There are three known or suspected disposal sites within and adjacent to the Logistics Center where the disposal of TCE liquid and sludges may have occurred. These are the East Gate Disposal Yard, Landfill No. 6 associated with the Industrial Waste Treatment Plant (IWTP), and a small site near monitoring well LC-6 (named the LC-6 and Pit Area). These are discussed below.

The East Gate Disposal Yard was used between 1946 and 1960 as an uncontrolled disposal site for waste generated by the Mount Rainier Ordnance Depot. Approximately two dozen trenches were excavated as interpreted by aerial photographs dated 1951 and 1960. Based on

interviews, the trenches received waste TCE and POL from the cleaning and degreasing operations. The contents of approximately 6 to 8 drums of waste TCE and POL were disposed of per month. These suspected trenches were subsequently covered and are not visible.

The Industrial Waste Treatment Plant (IWTP) receives storm water runoff from paved areas adjacent to Buildings 9570, 9580, and 9500, in which TCE has been stored and used. The IWTP and the associated settling pond are shown on photographs from 1951. Uncontrolled releases of TCE in this area may have previously been routed to the IWTP. Sediment and sludges from the IWTP and settling pond were placed in the adjacent Landfill No. 6.

The LC-6 and Pit Area consists of a pit which may have previously contained a storage tank. The pit appears on aerial photographs and may have been a disposal site for waste oil and solvent from the vehicle storage areas.

1.3.1.4 Soil Gas Survey

A soil gas survey was performed as part of the remedial investigation. The results of the soil gas survey are described in Section 4.2 of the Final Remedial Investigation Report (Envirosphere 1988b). The main objective of the soil gas investigation was to locate potential source areas of TCE contamination. While the concentrations of TCE measured by the soil gas survey are not necessarily proportional to the concentration of contaminants within the soil, areas of higher soil gas TCE concentrations are expected to be associated with the subsurface presence of TCE. Thus, the soil gas survey was used as a screening method. Based on previously developed information on contaminant distribution in the groundwater plume and historical interpretations of contaminant use and disposal, the locations for the soil gas surveys were selected.

Soil gas surveys were conducted at the source areas called the East Gate Disposal Yard, the Defense Reutilization and Marketing Office (DRMO) Yard, the North Uses Area, and the LC-6 and Pit Area.

Ambient air concentrations of specific volatile hydrocarbons were measured during acquisition of field blanks taken in the course of soil gas surveys. Field blanks are syringe samples taken in the open air in the source areas where a soil gas survey is being performed. The objective was to determine that chemicals detected in soil gas samples did not come from upwind sources. The field blanks were analyzed using a laboratory gas chromatograph installed on site. The laboratory gas chromatograph did not detect DCE in any of the eleven field blanks (detection limit 50 ppb). TCE was found in two field blanks, although the measured ambient concentration was below the quantitative detection limit of 7 ppb.

The results of the soil gas survey were used to establish the locations for the soil borings, which are described in the next section.

1.3.1.5 Soil Borings

A total of 25 soil borings were drilled to investigate possible soil contamination in the source areas. Soil borings were drilled to just below the water table. The Remedial Investigation report (Envirosphere 1988b) thoroughly discusses the distribution of contaminants at the site; a brief summary is given here.

Only the East Gate Disposal Yard showed measurable concentrations of TCE/DCE and several substances on the Hazardous Substance List (HSL). The boring locations at the East Gate Disposal Yard are shown in Figure 1-5. The results of the TCE/DCE analyses are shown in Table 1-2 and the results of the HSL are given in Table 1-3.

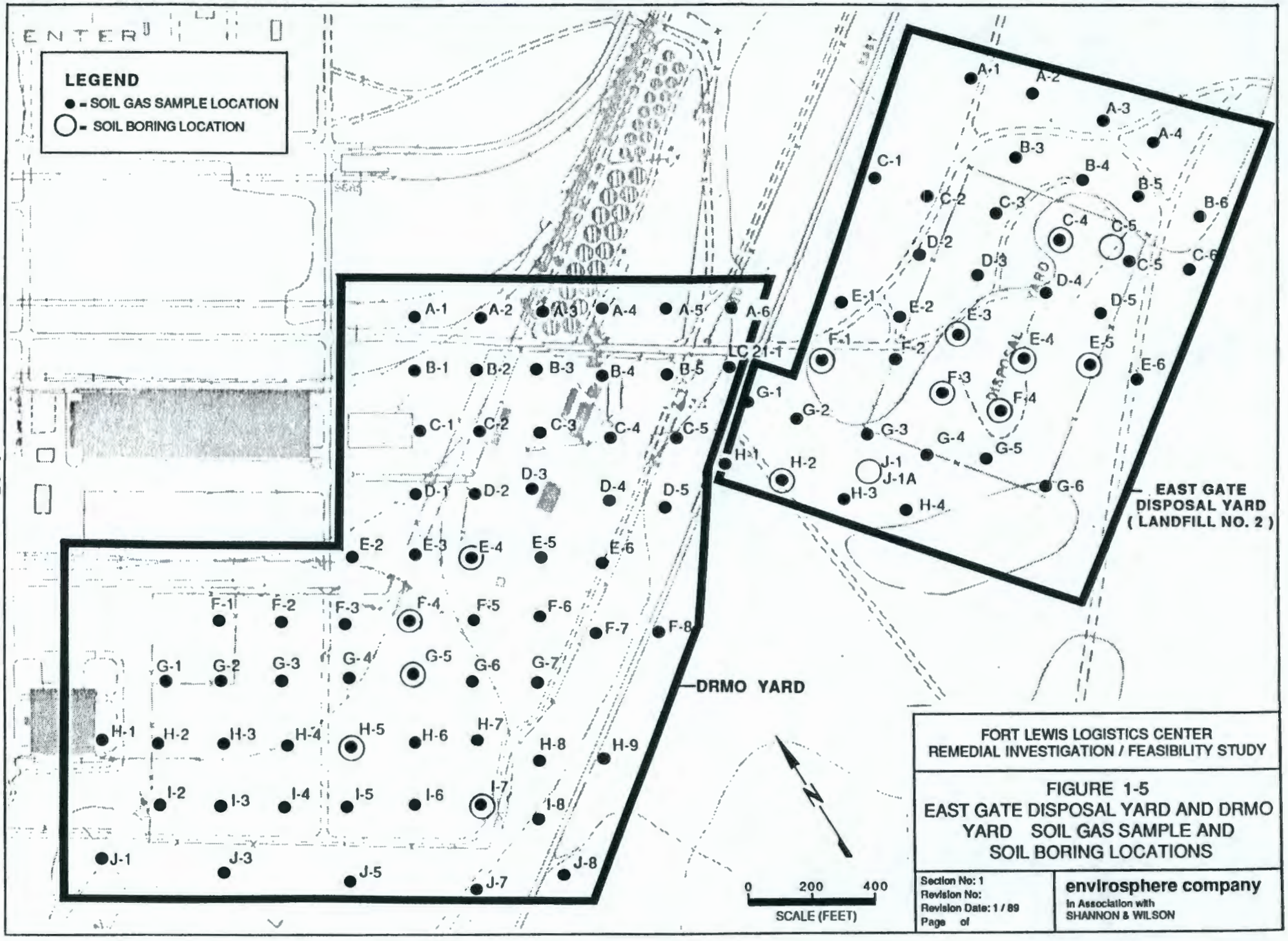

FORT LEWIS LOGISTICS CENTER
REMEDIAL INVESTIGATION / FEASIBILITY STUDY

FIGURE 1-5
EAST GATE DISPOSAL YARD AND DRMO YARD SOIL GAS SAMPLE AND SOIL BORING LOCATIONS

Section No: 1
Revision No:
Revision Date: 1 / 89
Page of

envirosphere company
In Association with
SHANNON & WILSON

TABLE 1-2

RESULTS OF CHEMICAL ANALYSES FOR TCE AND DCE
IN SOIL FROM EAST GATE DISPOSAL YARD SOIL BORINGS
(µg/kg)

Sample Interval	TCE Concentrations (at boring locations shown in Figure 1-5)										
	E-5	C-5	E-4	H-2	J-1	F-3	F-4	C-4	E-3	F-1	J-1A
2.5'-4.0'	13.0	<DL 1/	540	<DL	<DL	15,000	5,700	100	100	240,000	<DL
7.5'-10.0'	10.0	<DL	92.0	NS 2/	0.55	17.0	3.10	15,000	2.70	28.0	4.80
12.5'-14.0'	18.0	<DL					2.10	18.0	0.86	11.0 AVG	3.60
17.5'-19.0'		<DL						18.0	3.50		

Sample Interval	DCE Concentrations (at boring locations shown in Figure 1-5)										
	E-5	C-5	E-4	H-2	J-1	F-3	F-4	C-4	E-3	F-1	J1-A
2.5'-4.0'	11.5	<DL 3/	36.0	<DL	<DL	2,160	979	0.30	3.70	282,000	<DL
7.5'-10.0'	640	<DL	8.40	NS	0.89	66.5	1.10	<DL	0.34	0.22	<DL
12.5'-14.0'	33.6	<DL					0.60	<DL	<DL	6.00 AVG	<DL
17.5'-19.0'		<DL						<DL	0.30		

1/ DL - Detection Limit for TCE = 0.3 µg/kg

2/ NS - No Sample

3/ DL = Detection Limit for DCE = 0.2 ug/kg.

7698K

TABLE 1-3

RESULTS OF CHEMICAL ANALYSES FOR HAZARDOUS SUBSTANCE LIST (HSL) PARAMETERS FOR SOIL SAMPLES FROM EAST GATE DISPOSAL YARD (LOCATION F-1)

	Sample 3 (depth 12.5 - 13 feet)	Sample 1 (depth 2.5 - 4 feet)
INORGANICS (mg/kg)		
Aluminum	12,700	
Antimony	<14.0	
Arsenic	4.40	
Barium	48.0	
Beryllium	<1.20	
Cadmium	2.60	
Calcium	3,650	
Chromium	22.0	
Cobalt	11.0	
Copper	24.0	
Iron	21,200	
Lead	5.40	
Magnesium	5,570	
Manganese	423	
Mercury	0.10	
Nickel	27.0	
Potassium	951	
Selenium	<1.20	
Silver	<2.50	
Sodium	725	
Thallium	<2.50	
Vanadium	35.0	
Zinc	38.0	
Cyanide	<1.30	
ORGANICS (µg/kg)		
1,2-DCE	5	282,000
TCE	9	240,000
PCE	<5	11,000
Toluene	<5	14,000
Ethylbenzene	<5	9,400
Total Xylenes	<15	78,000
All other HSL volatiles	BDL 1/	BDL
All other HSL organics	BDL	NA

1/ Detection levels affected by 1:1,250 dilution.
Detection limits are shown in Appendix F of the Remedial Investigation Report (Envirosphere 1988b).

The boring at point F-1 showed significantly higher contamination than any other boring; organic contaminant levels were greater than 630,000 ug/kg. TCE, DCE, xylenes, toluene, tetrachloroethylene, and ethylbenzene were identified. Borings at locations F-3 and C-4 had TCE concentrations of 15,000 ug/kg, and 5,700 ug/kg TCE was measured in the boring at F-4. All of these elevated levels were found between the surface and 10 ft below the surface.

The maximum soil gas measurements for TCE and DCE were found in the East Gate Disposal Yard, and for PCE and TCA in the North Uses Area and DRMO Yard, respectively. Benzene and toluene were only measured in soil gas in the North Uses Area. Given these results, it is not clear why high levels of volatiles were found only in soil borings from the East Gate Disposal Yard. This may reflect the limited number of HSL analysis, and difficulty associated with collecting a volatile organic soil sample from a very coarse (gravelly) media. Additional confirmation soil sampling will be conducted in fall 1990 to supplement the existing data. Since the soil at the Logistics Center site is highly permeable, it is possible that the contaminants were transported directly downward with little lateral movement.

1.3.2 Upper Aquifer Groundwater Contamination

The TCE concentrations measured in the groundwater varied between less than 0.1 ppb to 2,400 ppb, and the DCE concentrations varied from less than 0.15 ppb to 130 ppb. The source of the DCE contamination is not known, since reportedly DCE was not known to have been used on the site. Two possible explanations for the DCE contamination present are that the TCE solvent used was contaminated with DCE and/or anaerobic biodegradation of the TCE resulted in the formation of DCE.

The Remedial Investigation (Envirosphere 1988b) sampling program utilized 96 preexisting wells and 33 newly installed monitoring wells in and adjacent to the Logistics Center. All wells were sampled and

analyzed for TCE and DCE, which were consistently found widely distributed across the site in previous investigations (Shannon and Wilson 1986, Ecology and Environment 1986). Wells were sampled on a quarterly basis to determine the variation in TCE and DCE concentrations with time. In addition to analysis for TCE and DCE, six wells were sampled once for analysis of substances on the EPA's Hazardous Substance List. PCE was measured in the groundwater from one well (6 µg/l), and TCA was measured in the groundwater from another well (approximately 1 µg/l). Ongoing groundwater monitoring will identify any variation in groundwater chemistry.

The areal extent of the TCE plume in the unconfined Vashon Drift Aquifer is shown in Figure 1-6. The 500, 50, and 5 ug/l contour lines are shown, as are some clean zones within the plume. The contaminated plume contains both TCE and DCE.

In general, the plume flows southeast to northwest, under the Logistics Center. Based on sampling results, it exits into American Lake. The remedial investigation concluded that decreases in the TCE and DCE concentrations as the plume migrates towards American Lake are caused by dispersion and to a lesser extent volatilization. Dispersion is the term used to describe the lateral spread of contaminants as they move with groundwater. Dispersion is a result of molecular diffusion and mechanical mixing. In addition to dispersion, the reduction of the TCE and DCE concentrations may also result from volatilization into the gas in the pores of the vadose zone above the groundwater. The gas released from the soil mixes with the atmosphere as the barometric pressure changes. A decrease in concentration could also be caused by biodegradation of TCE and DCE. But biodegradation was not considered a feasible explanation for a number of reasons:

(1) In order for TCE and DCE to degrade, other nutrients may be needed to support biological growth, such as would be found in soil with high organic content. The soil at the Logistics

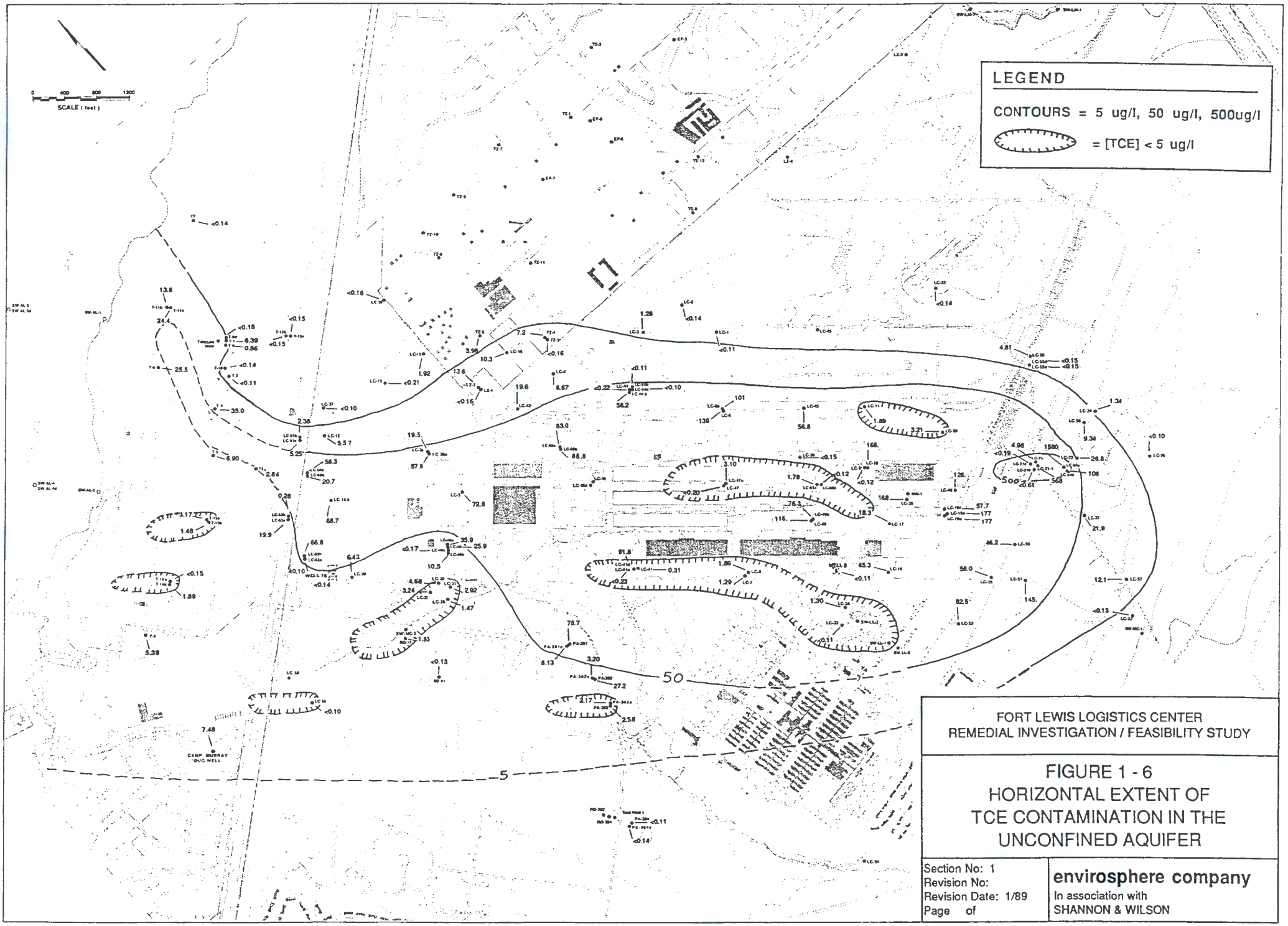

FORT LEWIS LOGISTICS CENTER
REMEDIAL INVESTIGATION / FEASIBILITY STUDY

FIGURE 1 - 6
HORIZONTAL EXTENT OF
TCE CONTAMINATION IN THE
UNCONFINED AQUIFER

Section No: 1
Revision No:
Revision Date: 1/89
Page of

envirosphere company
In association with
SHANNON & WILSON

Center does not appear to have high organic content, based on visual inspection of drill cuttings.

(2) DCE can both degrade and be a degradation product of TCE. If it was a degradation product of TCE, the ratio between DCE and TCE concentrations should change. In fact, the ratio appears to remain constant throughout the plume.

(3) The degradation product of TCE and DCE is vinyl chloride. Previous studies did not detect vinyl chloride (Shannon & Wilson 1986).

To continue to assess the effects of biodegradation, ongoing monitoring will include analyzing for vinyl chloride.

TCE/DCE may also be present in secondary sources contributing to groundwater contamination. TCE/DCE have a density greater than water and, in sufficient quantities of product, may move independently of groundwater and may sorb onto less permeable aquifer materials. These dense-nonaqueous-phase liquids (DNAPL) may then dissolve slowly into the groundwater or may continue to move under their own density gradient. If present, DNAPLs may act as a secondary source of contamination in the saturated zone.

Previous investigations had discovered some metals contamination above MCLs. In an effort to clarify the situation, Ebasco Environmental sampled for metals in ten wells across the study area. Data from two wells with the highest concentrations of total metals (LC-48 and T-02) indicated excessive turbidity. Since the excessive turbidity is probably an artifact of the construction of these wells, the high levels of total metals found in these samples are probably not representative of the groundwater in the aquifer.

1.3.3 Lower Aquifer Contamination

A limited investigation of the lower aquifers at 150, 200, and 300 foot depths was conducted as part of the Remedial Investigation. The Salmon Springs Recessional Aquifer was found to be contaminated with TCE levels exceeding 143 ug/l at a depth of 200 feet at LC-41d. No TCE contamination was found at LC-41e, which is screened at 300 feet.

Due to the limited nature of the lower aquifer study, only the following conclusions regarding lower aquifer contamination were drawn in the RI:

- The Salmon Springs Recessional Aquifer is contaminated at a depth of roughly 200 feet at monitoring well LC-41d.

- The source and extent of contamination of the lower aquifer cannot be determined based on the existing limited monitoring data.

Because contamination of the lower aquifers has not been defined in enough detail to develop remedial alternatives, the contamination of those aquifers will not be addressed in this FS. The Army will begin sampling and analysis of lower aquifers in fall 1990. The study will define the lateral and vertical extent of contamination in the lower aquifers and define the interaction between the aquifers.

1.3.4 Surface Water and Sediment Contamination

The results of surface water and sediment sampling are presented in Section 5.0 of the Remedial Investigation Report (Envirosphere 1988b). Local surface waterbodies most likely to be impacted by contaminated groundwater under the Fort Lewis Logistics Center are Lynn Lake, American Lake and Murray Creek which are principally groundwater fed. Lynn Lake is located on the southwest edge of the contaminated groundwater plume and may receive contamination from potential source areas such as the East Gate Disposal Yard. Murray Creek generally

flows along the west side of the study area toward American Lake and portions of the creek may also receive contaminated groundwater from potential source areas at the Logistics Center. Surface water and bottom sediment samples were collected and tested for TCE and DCE from American Lake, Lynn Lake, Lake Mondress and Murray Creek. Refer to Tables 1-4 and 1-5 for the results of the surface water sampling and the sediment sampling, respectively. See the Remedial Investigation for a description of the sample numbering system.

At Lynn Lake the storm sewer outfall that discharges into the lake had the highest levels of TCE/DCE. It appears that the outfall reflects contaminated groundwater infiltration into the storm sewer. The Remedial Investigation Report (Envirosphere 1988b) discusses the results in more detail.

1.4 RISK ASSESSMENT

1.4.1 Methodology

The endangerment assessment considered both human health risks and ecological risks. The maximum acceptable concentration (MAC) approach was used to conduct the Human Health Risk Assessment. In this approach, maximum acceptable concentrations (MACs) were computed for each contaminant and for each environmental media. The human targets considered were on-site military personnel, civilian workers, and children who might trespass into the area of the site which contained the highest levels of soil contamination (the East Gate Disposal Yard), and the off-site general adult population. The biological target receptors were aquatic organisms and local small mammals. The methodology and results of the human health and ecological risk assessment are presented in the Final Endangerment Assessment Report (Ebasco Environmental 1990).

EPA also carried out an assessment of human health risks at the site using "EPA Region 10 Exposure Parameters" (January 31, 1990) and the Risk Assessment Guidance for Superfund: Human Health Evaluation Manual

TABLE 1-4

SURFACE WATER SAMPLE DATA

Location	TCE (ug/l) 3/87	6/87	9/87	12/87	3/88	DCE (ug/l) 3/87	6/87	9/87	12/87	3/88
Lake Mondress										
SW-LM-1	<0.1	<0.1	DRY	DRY	DRY	<0.15	<0.15	DRY	DRY	DRY
SW-LM-2	<0.1	<0.1	DRY	<0.1	0.62	<0.15	<0.15	DRY	<0.15	<0.10
Lynn Lake										
SW-LL-1	39	0.46	<0.1	0.59	1.80	17	1.2	0.34	0.18	0.26
SW-LL-2	2	<0.1	<0.1	<0.1	0.72	<1.20	0.15	0.15	0.15	0.10
SW-LL-S	NS	21	46	<0.1	11.5	NS	12	23	<0.15	5.55
Murray Creek										
SW-MC-1	<0.1	<0.1	<0.2	<0.1	0.35	<0.15	<0.15	<0.30	<0.15	<0.15
SW-MC-2	4.5	2.2	2.7	2.0	1.90	<1.2	1.7	1.6	1.2	0.62
East Gate Disposal Yard (pond)										
SW-EG-1	0.12					<0.15				

American Lake	3/88	6/88	9/88	3/88	6/88	9/88
SW-AL-1	1.30	1.17	0.28	0.1	0.23	<0.10
SW-AL-2	0.69	0.20	<0.15	0.19	<0.10	<0.10
SW-AL-3	<0.15	0.15	<0.15	<0.10	<0 10	<0.10
SW-AL-3d	<0.15	0.20	<0.15	<0.10	<0 10	<0.10
SW-AL-4	0.15	0.21	<0.15	<0.10	<0 10	<0.10
SW-AL-4d	<0.15	0.21	<0.15	<0.10	<0 10	<0.10

7698K

TABLE 1-5

BOTTOM SEDIMENT SAMPLE DATA
(All samples collected March 1987 except where noted)

Location	TCE (ppb)	DCE (ppb)
Lake Mondress		
LM-1	<0.4	<0.6
LM-2	3.0	<0.6
Lynn Lake		
LL-1	<0.4	<0.6
LL-2	0.49	<0.6
Murray Creek		
MC-1 (a)	0.5	<0.6
MC-1 (b)	<0.4	<0.6
MC-2 (a)	<0.4	<0.6
MC-2 (b)	<0.4 (Avg.)	<0.6
American Lake (collected April 1988)		
AL-1	2.1	<0.2
AL-2	1.8	<0.2

(a) indicates sediment sample was taken in rapid flow conditions and (b) denotes sample was taken in slack water conditions.

Part A (December 1989). The results are similar, in most cases, to the Endangerment Assessment.

Tables 1-6 and 1-7 summarize human health risks at the site. A risk range is presented where results of the Endangerment Assessment and EPA assessment differ and where risks for the average and maximum contaminant concentrations were both calculated.

1.4.2 Risks to Human Health

The human health risk assessment considered carcinogenic and noncarcinogenic risks to both on-post (on the Fort Lewis Military Reservation) and off-post (residential areas off the military reservation) populations. Exposure routes considered included ingestion of contaminated water and soil, inhalation of vapors from contaminated water and soil, inhalation of contaminated soil (particulate matter), ingestion of fish from contaminated surface water, and dermal contact with contaminated soil, groundwater, and surface water. Assumptions were made to estimate the amount of contaminants to which a person would be exposed. For example, it was assumed that the on-post population would be exposed to soil contamination 5 days per week for 30 years. For the off-post population, one of the assumptions is that residents would drink up to 2 liters of water per day from the contaminated aquifer for 70 years. This assumption is conservative for current conditions since residents near the Fort Lewis Army base have been connected to an alternative water supply and are generally not consuming the water from this shallow aquifer.

1.4.3 Risks to the Environment

The results of the ecological assessment indicate that the concentrations of TCE and DCE in surface water and sediments of the on-post and off-post lakes do not result in adverse toxicological effects to aquatic organisms. In each of the lakes, the average measured surface water concentrations of TCE and DCE were below levels

TABLE 1-6

ON-SITE WORKER RISK

Contaminant	Groundwater		Surface Water[1/]		Soil	
	Hazard Index	Cancer Risk	Hazard Index	Cancer Risk	Hazard Index	Cancer Risk
Arsenic	7.2E-02	6.7E-05			2.3E-03	2.1E-06
Barium	1.8E-02				5.1E-04	
Cadmium	1.7E-02				2.7E-03	2.3E-10
Chromium	1.2E-01				2.3E-03	1.3E-08
Manganese	3.4E-01				1.1E-03	
Mercury	3.4E-02				1.7E-04	
Nickel	8.6E-02				6.9E-04	6.8E-10
Thallium	1.2E+00				9.2E-03	
Vanadium					2.6E-03	
Zinc	1.8E-02				9.8E-05	
Trichloroethylene	5.6E+00	1.2E-06 - 1.7E-03	1.8E-02	1.5E-06	1.7E-02	5.1E-09 - 1.1E-06
1,2-Dichloroethylene	1.2E-02 - 1.3E-01		2.0E-03		9.0E-06 - 1.3E-02	
Toluene					2.4E-05 - 4.5E-05	
Ethyl benzene					4.8E-05 - 9.0E-05	
Total xylenes					2.1E-05 - 3.7E-05	
Tetrachloroethylene	4.3E-03 - 1.2E-02	2.8E-06 - 9.8E-06			5.7E-04 - 1.1E-03	1.5E-07 - 2.4E-07
1,1,1-Trichloroethane	1.0E-03				1.8E-05	
Vinyl chloride	8.6E-02	2.1E-04			1.3E-02	8.9E-06

1/ Lynn Lake - Fish only.

7698K

TABLE 1-7

OFF-SITE RESIDENT RISK

Contaminant	Groundwater		Surface Water[1/]		Soil	
	Hazard Index	Cancer Risk	Hazard Index	Cancer Risk	Hazard Index	Cancer Risk
Arsenic	9.1E-02	2.3E-04			1.6E-08	2.5E-10
Barium	2.3E-02				1.8E-06	
Cadmium	2.2E-02				1.9E-08	6.1E-11
Chromium	1.5E-01				1.6E-08	3.5E-09
Manganese	4.3E-01				5.1E-06	
Mercury	4.3E-02				1.2E-09	
Nickel	1.1E-01				4.9E-09	1.8E-10
Thallium	1.5E+00				6.5E-08	
Vanadium					1.8E-08	
Zinc	2.3E-02				6.9E-10	
Trichloroethylene	7.0E+00	5.2E-06 - 5.9E-03	9.5E-03	1.0E-07 - 7.9E-07	7.4E-06	5.4E-16 - 9.9E-10
1,2-Dichloroethylene	4.6E-03 - 4.3E-01		2.7E-04 - 7.0E-04		2.4E-11 - 1.4E-05	
Toluene					4.3E-11 - 4.7E-09	
Ethyl benzene					2.0E-10 - 1.2E-08	
Total xylenes					2.4E-10 - 6.8E-08	
Tetrachloroethylene	5.4E-03	2.0E-05			7.7E-09 - 8.3E-07	2.6E-13 - 2.9E-11
1,1,1-Trichloroethane	1.7E-03				4.9E-08	
Vinyl chloride	1.1E-01	5.5E-04			8.2E-04	2.6E-07

1/ Murray Creek - Fish only.

7698K

considered necessary to initiate chronic effects. Maximum concentrations of these chemicals in the surface water bodies were also below levels necessary to trigger acute effects.

Measured concentrations of TCE in lake sediments were very low and DCE was not detected in any of the samples collected. Interstitial water concentrations estimated from the sediment concentrations of TCE were well below those levels necessary to initiate acute and chronic toxicity, indicating concentrations measured in lake sediments do not pose risks to the aquatic organisms. Consumption of contaminated aquatic organisms from the aquatic food chain are evaluated in the human health section of the Endangerment Assessment.

Due primarily to a lack of low dose toxicity information for key wildlife species (i.e., land mammals, birds, etc.), it is difficult to predict risks to wildlife from exposure to the low concentrations of TCE and DCE found in surface water and sediment. Additional discussions of this issue can be found in the Final Endangerment Assessment Report (Ebasco Environmental 1990).

1.5 VOLUMES OF CONTAMINATED SOURCE AREA SOILS AND GROUNDWATER

1.5.1 Soil Source Area Contamination

These assumptions are based on interpretation of aerial photographs of the East Gate Disposal Yard taken from 1951 to 1960 and the fact that soil borings showed that the groundwater table is roughly 7-12 feet below the surface.

For the comparison of soil source area remedial alternatives for the East Gate Disposal Yard, the following assumptions were made:

1) The location of contaminated material could be determined by a combination of geophysical survey, soil gas survey, and borings. The costs for these activities are included in the remedial action costs for each alternative.

2) The actual volume of contaminated material is not known; therefore, the volume of material was estimated in order to calculate remediation costs. It is assumed that the TCE contamination is limited to the interiors of the 24 backfilled trenches. Assuming the trenches are 8 feet wide, 100 feet long, and 10 feet deep, the total volume of contaminated material is approximately 7,000 cubic yards. The contaminated landfill material is heterogeneous gravelly silt and clay, with permeability and porosity higher than the native soils.

3) The 24 trenches are assumed to be roughly parallel and cover a total area of roughly 100 by 200 feet. The area was calculated based on the area of each individual trench (8 feet by 100 feet).

4) The contaminated backfill material is assumed to have the following contaminant concentrations based on the soil boring at location F-1 in the East Gate Disposal Yard from the Remedial Investigation Report (Envirosphere 1988b):

TCE	240 mg/kg
DCE	282 mg/kg
PCE	11 mg/kg
Xylene	78 mg/kg
Toluene	14 mg/kg
Ethylbenzene	9 mg/kg

5) At the above assumed concentrations the contaminated soil contains halogenated hydrocarbons exceeding the 0.01 percent allowable limit specified for Dangerous Waste by the Washington Department of Ecology (WAC 173-303-102). The contaminated soil in the trenches is therefore a Dangerous Waste that cannot be disposed of to a conventional sanitary landfill without pretreatment. Furthermore, CERCLA wastes must be disposed of in such a manner as to be in compliance with the off-site CERCLA Policy (OSWER Directive 9330.2-5).

1.5.2 Contaminated Groundwater Plume in Unconfined Aquifer

The remedial alternatives focus only on TCE and DCE contamination in the shallow, unconfined Vashon Drift/Post Kitsap Aquifer. This aquifer is known to be contaminated with TCE and DCE above the drinking water MCLs. Although PCE is considered to be a contaminant of concern, PCE was only detected in one well at a relatively low concentration. Also, the technologies applicable to remediation of TCE and DCE would also be applicable to remediation of PCE. The extent of TCE and DCE contamination of the unconfined upper aquifer was shown in Figure 1-6.

As described in Section 4.3 of the Remedial Investigation Report (Envirosphere 1988b), the shallow contaminated aquifer exhibits complex stratigraphy. Within the aquifer the soil type and soil transmissivity vary both horizontally and vertically, as well as seasonally. The typical depth to the groundwater table is 20 feet with seasonal variations of 3 to 6 feet, and the underlying Kitsap Formation aquitard is typically 120-130 feet below ground surface. The groundwater gradient ranges from roughly 10 to 20 feet per mile, and changes seasonally. Aquifer tests indicated transmissivities of 50,000 to 100,000 gal/day/ft. The estimated groundwater velocity ranges from 0.02 to 2.0 feet per day, with a median value of 1.5 feet per day. Most of the groundwater is believed to flow into American Lake.

The vertical cross section of TCE contamination in the shallow aquifer (defined by the 5 ug/l TCE concentration limit) is fairly constant along the path of the groundwater plume. The contaminated plume can be characterized as being roughly 3,000-4,000 feet wide with a contaminated thickness of 60-80 feet. The TCE concentration gradually decreases as the plume proceeds from the source areas to American Lake. Immediately downgradient of the East Gate Disposal Yard the TCE concentration ranges from roughly 10 to 2,400 ppb while in Tillicum the TCE concentration ranges from roughly 1.0 to 50 ppb. There is an approximate halving of the TCE concentration each mile the plume proceeds. The concentration decrease is believed to be caused by dispersion and volatilization as discussed in Section 1.3.2.

1.6 APPLICABLE OR RELEVANT AND APPROPRIATE REQUIREMENTS

This section presents an identification of applicable or relevant and appropriate requirements (ARARs) to be used in developing and assessing various remedial action alternatives. Following an introduction, ARARs pertaining to hazardous waste management and cleanup, groundwater protection, surface water protection, and air quality will be briefly discussed. As remedial action objectives are developed in subsequent sections, their ability or inability to achieve specific ARARs will be discussed.

1.6.1 Introduction

The Comprehensive Environmental Response, Compensation and Liability Act of 1980 (CERCLA) as amended by the Superfund Amendments and Reauthorization Act of 1986 (SARA) sets forth the federal statutory authority for the determination of ARARs at Superfund sites. ARARs were developed in accordance with EPA's interim final guidance document for the development of ARARs (EPA 1988b) and the RI/FS guidance published by EPA (1988a).

A requirement can be "applicable" or "relevant and appropriate," but not both. "Applicable requirements" means those cleanup standards, standards of control, and other substantive environmental protection requirements, criteria, or limitations promulgated under federal or state law that specifically address a hazardous substance, pollutant, contaminant, remedial action, location, or other circumstance at the Logistics Center site. For example, discharges of water to a navigable waterway are regulated under the National Pollution Discharge Elimination System (NPDES) program of the Clean Water Act.

"Relevant and appropriate requirements" are those that apply because conditions at the site sufficiently resemble conditions for which the requirements were developed. The Federal Resource Conservation and Recovery Act (RCRA) is an example of a law that may be "relevant and appropriate" to the Logistics Center but not strictly "applicable."

This law is not "applicable" because areas considered sources were never given interim status nor was a permit issued for handling solid waste. Nevertheless, portions of the site sufficiently resemble a landfill as defined in 40 CFR 260 that waste handling standards may be "relevant and appropriate."

SARA gave state cleanup standards essentially equal importance as federal standards in guiding cleanup measures in cases where state standards are more stringent. State standards pertain only if they are generally applicable, were passed through formal means, were adopted on the basis of hydrologic, geologic, or other pertinent considerations, and the option of land disposal is not precluded by a statewide ban. Most importantly, SARA stated that cleanup of a site must ensure that the public and environmental health are protected. It also states that selected remedies should meet all ARARs, but issues such as cost-effectiveness must be weighed in the selection process.

ARARs can generally be divided into three types: contaminant-specific, action-specific, and location-specific requirements. Examples of contaminant-specific ARARs include drinking water or air quality standards for TCE and DCE. Action-specific requirements impose restrictions on certain activities. For example, certain closure activities are required for hazardous waste disposal units. Location-specific requirements depend upon the characteristics of a site or its immediate environment. These types of ARARs will be discussed as specific remedial action alternatives are evaluated.

1.6.2 ARARs for Hazardous Waste Management and Cleanup

In this subsection, ARARs will be presented which deal with managing hazardous waste and cleaning up a contaminated site.

1.6.2.1 Comprehensive Environmental Response, Compensation and Liability Act of 1980 (CERCLA) as Amended by the Superfund Amendments and Reauthorization Act of 1986 (SARA)

The Superfund Amendments and Reauthorization Act of 1986 includes provisions for the selection and preference of remedial actions. Excavation and off-site land disposal options are least favored when on-site treatment options are available. Emphasis is placed on alternatives which permanently treat or immobilize contamination. Selected alternatives must be protective of human health and the environment, which implies that federal and state ARARs be met. However, the selected remedy need not meet all ARARs if it is technically impractical, if its implementation would produce a greater risk to human health or the environment, if an equivalent level of protection can otherwise be provided, if state standards are inconsistently applied, or if the remedy is only part of a complete remedial action which attains ARARs. The cost-effectiveness of alternatives may be considered in selecting the remedy.

1.6.2.2 State Hazardous Waste Laws

The Model Toxics Control Act was passed during the general election in November 1988. Regulations implementing the Act were promulgated in May 1990. It establishes administrative processes and standards to identify, investigate, and clean up facilities where hazardous substances have come to be located in a manner that protects human health and the environment.

1.6.2.3 Designation of Dangerous Waste

Dangerous Wastes (DW) and Extremely Hazardous Wastes (EHW) are defined by WAC 173-303-081. The state definition of a hazardous waste incorporates the USEPA designation of hazardous waste which is based on the compound being specifically listed as such, or on the waste exhibiting the properties of reactivity, ignitability, corrosivity, or EP toxicity. In addition, the state considers the properties of

persistence, carcinogenicity, and toxicity. Washington identifies hazardous waste as either dangerous waste (DW) or extremely hazardous waste (EHW). These are subject to somewhat different requirements. For the case of contaminated soils, the waste classification is based primarily on the concentration of contaminants. Table 1-8 lists the contaminant concentrations assumed for the soils at the Logistics Center (see Section 1.5.1).

The toxicity of the soil is determined according to WAC 173-303-101, and by utilizing the toxicity designations of WAC 173-303-9903. All of the compounds listed in Table 1-8 fall under toxic category C. The equivalent concentration of the contaminated soil is 6.34×10^{-5}%. This concentration is below the value required for designation of the soil as a EHW (0.01% above a batch waste quantity of 4,000 lb) or DW (0.001% above a batch waste quantity of 220 lb) as a result of its toxicity.

However, TCE, DCE, and PCE are halogenated hydrocarbons. Thus the persistent dangerous waste provisions of WAC 173-303-102 apply. The total halogenated hydrocarbon concentration in the soil is 0.0533%. According to WAC 173-303-9907, this concentration is sufficient to classify it as a persistent DW provided the batch waste quantity is at least 220 pounds.

The carcinogenic dangerous waste criteria may also apply because of TCE and PCE. The total carcinogen concentration in the soils is 0.0251%. Again, this level is high enough to classify the contaminated soil as carcinogenic DW, but not high enough for an EHW classification.

The contaminated soil at the Logistics Center is designated as a persistent and carcinogenic DW, but is not subject to the EHW restrictions of WAC 173-303. Nonetheless, disposal of this soil would require following certain hazardous generator regulations. These requirements are discussed below.

TABLE 1-8

DANGEROUS WASTE DETERMINATION FOR CONTAMINATED SOILS

Dangerous Waste Constituent	Soil Concentration (mg/kg)	(wt. %)	Reason for Designation[1/]
trichloroethylene	240	0.0240	C, H,+
1,2-dichloroethylene	282	0.0282	D, H
perchloroethylene	11	0.0011	C, H,+
toluene	14	0.0014	C, I
xylene	78	0.0078	C, I
ethylbenzene	9	0.0009	C, I

Total Concentration = 0.0634%

Equivalent Concentration[2/] = 6.34×10^{-5}%

Total Halogenated Hydrocarbon Concentration = 0.0533%

Total Carcinogen Concentration[3/] = 0.0251%

1/ WAC 173-303-9903. C = toxic category C. H = persistent, halogenated hydrocarbon. + = IARC animal or human, positive or suspected carcinogen. I = ignitable.

2/ Equivalent concentration calculation for toxic category C dangerous wastes, according to WAC 173-303-101.

3/ WAC 173-303-103. Includes TCE and PCE only.

1.6.2.4 Notification and Identification Numbers

Any person who generates, transports, offers for transport, or transfers a dangerous waste is required to obtain an EPA/state identification number (WAC 173-303-060).

1.6.2.5 Discharges of Pollutants to the Environment

Any spill or discharge of a dangerous waste into the environment, whether intentional or accidental, that threatens public health or the environment will require compliance with the notification, mitigation, and control measures described in WAC 173-303-145. Discharges of pollutants directly into navigable waters from a point source are covered by the state NPDES permit program according to WAC 173-303-220.

1.6.2.6 Transport, Packaging, Labeling, Placarding, and Manifesting of Hazardous Waste Shipments

WAC 173-303-190 may apply to the off-site shipment of contaminated soils, spent activated carbon, or other contaminated materials. Waste materials must be identified, containerized, labeled and placarded as appropriate for the contents, and manifested to verify that the shipment reaches its intended destination.

1.6.2.7 Site Security and Inspections

WAC 173-303-310 requires that the active portion of a site be secure from unauthorized entry and that warning signs be posted at site entrances. These requirements are waived if physical contact with wastes or equipment in the active portion of the site will not injure persons or livestock. To prevent equipment malfunction or deterioration that could lead to discharges of dangerous waste, the site should be inspected often enough to prevent such harmful releases (WAC 173-303-320).

1.6.2.8 Management of Containers

The condition and identification of containers and the compatibility of waste with containers are regulated under WAC 173-303-630. In addition, if tank systems are used for storage of dangerous waste, the tank systems would be subject to the requirements of WAC 173-303-640. The containment and detection regulations would not apply to tanks that are part of a secondary containment system.

1.6.2.9 Resource Conservation and Recovery Act (RCRA)

RCRA deals with specific waste management activities. Subtitle C (Hazardous Waste Management) is most likely to be applicable to this project. The provisions in Subtitle C mandate the creation of a cradle-to-grave management system for hazardous waste by regulating the generation, transportation, storage, and disposal of hazardous waste. RCRA defines a hazardous waste as a "solid waste" (even though it is often liquid in physical form) that may cause or significantly contribute to serious illness or death, or that poses a substantial threat to human health or the environment when improperly managed.

The soil to be treated at Fort Lewis may be a RCRA hazardous waste. No TCLP analyses were performed; however, based on the soil concentrations in Table 1-1 and Table 1-2, the leachate from these soils could be above the LDR standard if all the TCE were leachable (a worst-case comparison). Further characterization of the soil may be necessary to establish the level of toxicity in the soil. If the soil is found to be a RCRA hazardous waste, land disposal restrictions (LDRs) may apply to the remediation of the site. LDRs are discussed in more detail in Section 1.6.2.10. The applicability of LDRs to soil remediation is treatment dependent and will be further discussed as specific remedial action alternatives are evaluated.

The restoration of groundwater often involves withdrawal, treatment of the contaminated water, and reinjection of the treated water into the ground. This constitutes "land disposal" under LDR (RCRA Section 3004(k)). The injection into or above an underground source of drinking water within one-quarter mile of a well is banned by RCRA Section 3020(a). However, RCRA Section 3020(b) exempts from the ban all reinjections of treated groundwater into such formations as part of a CERCLA Section 104 or 106 response action, or a RCRA corrective action. Three qualifications must be met for the exemption to apply:

(1) the injection is a CERCLA response action or a RCRA corrective action;

(2) the contaminated groundwater must be treated to substantially reduce hazardous constituents prior to such injection; and

(3) the response action or corrective action must be sufficient to protect human health and the environment upon completion.

1.6.2.10 Landfill Restrictions (40 CFR 268, Subpart C)

This subpart imposes restrictions on the landfill disposal of wastes containing certain chemicals. The landfill ban requires that "hazardous wastes containing halogenated organic compounds in total concentration greater than or equal 1,000 mg/kg" and those hazardous wastes numbered "F001, F002, F003, F004, and F005" be prohibited from land-based disposal unless the Administrator of the EPA makes the determination that the prohibition is not necessary to protect human health and the environment, or that the concentration(s) of the hazardous constituent(s) are below established limits. The effective date for the land disposal ban is November 8, 1990. After the effective date of the land ban, certain solvent-containing wastes may be disposed of at a permitted RCRA hazardous waste landfill only if the concentrations of hazardous constituents are below established technology-based standards.

The constituents discovered in the soils at the Logistics Center include trichloroethylene, dichloroethylene, perchloroethylene, toluene, xylene, and ethyl benzene. The waste identification numbers for these solvents are listed in Table 1-9. According to the land ban final rule issued November 7, 1987 (51 FR 40571), the EPA treatability standards for the spent solvents are based on the concept of best demonstrated available technology. The technology-based limits for land disposal of the above-listed chemicals are discussed below. These include standards for both contaminated wastewaters and soils.

Wastewater treatment standards may be applicable in the event that surface water removal or soils dewatering would take place as part of a remedial action. Soil treatment standards apply in determining whether landfill disposal of contaminated soil is allowable. The soil and wastewater are tested with the Toxic Characteristic Leaching Procedure (TCLP), and the concentration of the solvents in the extract is compared to the treatment levels (see 40 CFR 268, Appendix I for details on the TCLP). If solvent concentrations in the TCLP extract are below the treatment levels, then landfill disposal at a RCRA-permitted facility would be allowable. The treatment levels are listed in Table 1-9. A certification statement specified at 40 CFR 268.7(a)(2) would be required to accompany the waste manifest required by 40 CFR 262 if this option was chosen.

The Logistics Center has been placed on the NPL (54 FR 48184, November 21, 1989) and is a CERCLA remedial action. Therefore, the RCRA Land Disposal Restrictions are relevant and appropriate to on-site remedial actions. If the treated waste is to remain at the CERCLA site, the disposal site does not need to be permitted as per CERCLA 121(e). The concentrations of contaminant that remain in the soil must still meet the treatability standards set by LDRs or a variance must be obtained.

TABLE 1-9

CRITERIA FOR APPLICABILITY OF LAND
DISPOSAL BAN OF SOLVENT CONTAINING WASTES

Hazardous Constituent	EPA Waste ID No.	TCLP Extract Treatment Level (mg/l)	
		Soil	Wastewater
trichloroethylene	F001 U228	0.091	0.062
1,2-dichloroethylene	U079	NR	NR
perchloroethylene	U210	0.050	0.079
toluene	F005 U220	0.33	1.12
xylene	F003 U239	0.15	0.05
ethylbenzene	F003	0.053	0.05

NR = Not regulated under 40 CFR 268.

1.6.3 Water Quality Protection

This subsection outlines pertinent water quality regulations. General requirements are discussed followed by specific groundwater and surface water ARARs.

1.6.3.1 General Water Quality ARARs

Washington has several statutes and has developed regulations which are potential ARARs for the Logistics Center site. These may apply to both groundwater and surface water.

Antidegradation Policy (RCW 90.48 and 90.54). The state water quality laws include an antidegradation policy which states that existing uses of water shall be maintained and protected. Furthermore, the regulations prohibit further degradation which would interfere with or become injurious to existing uses.

Discharge Standards (RCW 90.52.040). Washington has adopted a technology-based approach as part of the Pollution Disclosure Act of 1971 (Chapter 90.52 RCW). This act requires dischargers to use "all known, available, and reasonable methods of treatment prior to" discharge "regardless of the quality of the water . . . to which wastes are discharged." If water quality standards are not being met, a more stringent water quality based effluent limit can be required.

State Water Code (RCW 90.03 and 90.14). The State Water Code (RCW 90.03) and Water Rights (RCW 90.14) govern the extraction of water (from surface or groundwater) for uses other than domestic consumption. Water extraction must be consistent with beneficial uses of the resource and must not be wasteful. Groundwater extraction/treatment systems would likely be required to meet the requirements associated with a Water Rights permit.

Drinking Water Standards (40 CFR 141 and WAC 248-54). Drinking water standards, including appropriate maximum contaminant levels (MCLs) and maximum contaminant level goals (MCLGs), must be attained for sources of drinking water. Drinking water regulations (both federal and state) may be relevant and appropriate in both the unconfined and the Salmon Springs aquifers since both are used as drinking water sources.

The MCL for trichloroethylene is 5 ug/l (40 CFR 141.61) while the MCLG for 1,2-dichloroethylene is 100 ug/l (54 Federal Register. 22062. May 22, 1989).

1.6.3.2 Groundwater Protection

Several alternatives may require groundwater remediation measures. Many of Washington's environmental laws and regulations involve groundwater protection.

Underground Injection Control (WAC 173-218). The state of Washington was delegated regulatory responsibility for the Underground Injection Control (UIC) Program in 1984. Subsequently, Ecology promulgated regulations prohibiting the use of injection wells for waste disposal.

Discharge Standards (RCW 90.48, 90.52, and 90.54). State Water Quality laws require that best available technology be applied to the treatment system prior to discharge of all wastes, materials and substances into groundwater. Ecology is currently developing chemical-specific water quality standards for groundwaters in the state (Groundwater Quality Standards). The Groundwater Quality Standards will specify three classes of aquifers each of which will have its allowable concentrations. The three classes of groundwater established by EPA are based on groundwater value and vulnerability to contamination. The aquifers beneath the Fort Lewis Logistics Center are considered Class 2 since the groundwater is potentially available for drinking water, agriculture, or other beneficial uses. The allowable "Early Warning" concentrations for a Class 2 aquifer are 10% of the MCL for carcinogens, 20% of the MCL for noncarcinogens, and 50% of the MCL for

aesthetic components. The "Early Warning" limits will not apply at the end of the pipe. For water available for beneficial use, the remedy should ensure that the concentrations of constituents meet the State Groundwater Quality Standards or the MCLs, whichever is more stringent. Dilution and attenuation in the vadose zone and inside the facility property line will be allowed. The Groundwater Quality Standard limits will apply at the most restrictive of the following "Points of Compliance": the property line or 100 feet downgradient of the discharge point.

State Waste Discharge Permits (WAC 173-216). Groundwater reinjection into an aquifer must comply with the substantive requirements of WAC 173-216.

Protection of Upper Aquifer Zones (WAC 173-154). WAC 173-154 governs the use of aquifer systems where an upper aquifer can interact with lower ones or with surface waters.

Water Well Construction (WAC 173-160). WAC 173-160 includes minimum standards for water well construction, requirements for water well construction reports, and procedural regulations for examining and licensing contractors and operators.

1.6.3.3 Surface Water Protection

Several alternatives may involve the treatment of contaminated water and subsequent discharge to nearby surface water or the removal, treatment, and discharge of surface water. Many environmental laws and regulations are directed towards protecting surface water quality.

National Pollution Discharge Elimination System (NPDES) (WAC 173-220 and 40 CFR 122). These regulations govern point source discharges into navigable waters, including Murray Creek, American Lake, and Lynn Lake. Limits on the concentrations of contaminants which may be discharged and of allowable flowrates are determined on a case-by-case basis.

Water Quality Standards (WAC 173-201). Surface water is classified according to its quality and uses. The waters near the Logistics Center are classified as follows:

American Lake	- Lake Class
Lynn Lake	- Lake Class
Murray Creek	- Class AA

Ecology has adopted numerical ambient water quality criteria for six conventional pollutant parameters (defined in WAC 173-201-025): (1) fecal coliform bacteria; (2) dissolved oxygen; (3) total dissolved gas; (4) temperature; (5) pH; and (6) turbidity. In addition, toxic, radioactive, or deleterious material concentrations shall be below those of public health significance or which may cause acute or chronic toxic conditions to the aquatic environment or which may adversely affect any water use.

1.6.4 Air Quality

Groundwater and soil treatment equipment that generate air emissions would be regulated under the Washington Clean Air Act (Chapter 70.94 RCW).

General Regulations for Air Pollution Sources (WAC 173-400). The purpose of this chapter of the regulations is to establish standards deemed to be technically feasible and reasonably attainable for sources of air pollution. WAC 173-400-040 establishes general standards for maximum emissions from sources in the State of Washington. WAC 173-400-075 establishes the emission standards for sources emitting hazardous air pollutants.

Implementation of Regulations for Air Contaminant Sources (WAC 173-403). The purpose of this chapter of the regulations is to establish procedures for the implementation of regulations and rules generally applicable to the control and/or prevention of the emission of air contaminants.

Ambient Air Quality Standard for Particulate Matter (WAC 173-470). This chapter of the regulations establishes maximum acceptable levels for particulate matter in the ambient air.

The Clean Air Act. The Clean Air Act is a federal law which was passed by congress in 1963. Amendments to this law were passed in 1970 and 1977. The objective of the Clean Air Act is to protect and enhance the quality of the nation's air resources in order to promote and maintain public health and welfare. The Clean Air Act achieves this objective by regulating emissions into the air. Pursuant to the Clean Air Act, EPA has promulgated National Ambient Air Quality Standards, National Emission Standards for Hazardous Air Pollutants, and New Source Performance Standards.

1.7 REMEDIAL ACTION OBJECTIVES

Listed in Tables 1-10 and 1-11 are the remedial action objectives for TCE, PCE, and DCE in groundwater; TCE in surface water; and the cumulative risk assuming remedial action objectives are achieved. Current site risks have also been included in these tables for comparison purposes. The rationale for selecting remedial action objectives is discussed later in this section.

Remedial Action Objectives (RAOs) are site-specific goals that define the extent of cleanup necessary to achieve the specified level of remediation at a site. The RAOs include the preliminary cleanup levels, the area of attainment, and the restoration time frame and are formulated to achieve the overall goal of the Superfund program to protect human health and the environment. The Remedial Action Objectives for the Fort Lewis Logistics Center are listed below:

1) Confirm that all remaining sources of soil contamination have been identified. Characterize ambient levels of contaminants of concern in soil, surface water, and groundwater.

TABLE 1-10

ON-SITE WORKER RISK AND REMEDIAL ACTION OBJECTIVES

	Site Risks						Remedial Action Objective (RAO)			Combined Risk at RAO 2/, 3/	
	GROUNDWATER		SURFACE WATER 1/		SOIL						
Contaminant	Hazard Index	Cancer Risk	Hazard Index	Cancer Risk	Hazard Index	Cancer Risk	Groundwater (µg/l)	Surface Water (µg/l)	Soil (µg/l)	Hazard Index	Cancer Risk
Arsenic	7.2E-02	6.7E-05			2.3E-03	2.1E-06				7.2E-02	6.4E-05
Barium	1.8E-02				5.1E-04					1.8E-02	
Cadmium	1.7E-02				2.7E-03	2.3E-10				1.7E-01	2.3E-10
Chromium	1.2E-01				2.3E-03	1.3E-08				1.2E-01	1.3E-08
Manganese	3.4E-01				1.1E-03					3.4E-01	
Mercury	3.4E-02				1.7E-04					3.4E-02	
Nickel	8.6E-02				6.9E-04	6.8E-10				8.6E-02	6.8E-09
Thallium	1.2E+00				9.2E-03						
Vanadium					2.6E-03					2.9E-05	
Zinc	1.8E-02				9.8E-05					1.8E-02	
Trichloroethylene	5.6E+00	1.2E-06 - 1.7E-03	1.8E-02	1.5E-06	1.7E-02	5.1E-09 - 1.1E-06	5	80			3.6E-06
1,2-Dichloroethylene	1.2E-02 - 1.3E-01		2.0E-03		9.0E-06 - 1.3E-02		70			1.2E-01	
Toluene					2.4E-05 - 4.5E-05					3.9E-07	
Ethyl benzene					4.8E-05 - 9.0E-05					5.4E-07	
Total xylenes					2.1E-05 - 3.7E-05					1.7E-06	
Tetrachloroethylene	4.3E-03 - 1.2E-02	2.8E-06 - 9.8E-06			5.7E-04 - 1.1E-03	1.5E-07 - 2.4E-07	5			8.6E-03	2.8E-06
1,1,1-Trichloroethane	1.0E-03				1.8E-05					2.4E-04	
Vinyl chloride	8.6E-02	2.1E-04			1.3E-02	8.9E-06					

1/ Lynn Lake - Fish only.

2/ Does not include risks from vinyl chloride which was not detected in groundwater or soil using quantitative levels of 10 µg/l and up to 12.5 mg/kg, respectively.

3/ Does not include risk from thallium in groundwater which was not detected at the 10 µg/l level of quantification.

7698K

TABLE 1-11

OFF-SITE RESIDENT RISK AND REMEDIAL ACTION OBJECTIVES

	Site Risks						Remedial Action Objective (RAO)			Combined Risk at RAO 2/, 3/	
	GROUNDWATER		SURFACE WATER 1/		SOIL						
Contaminant	Hazard Index	Cancer Risk	Hazard Index	Cancer Risk	Hazard Index	Cancer Risk	Groundwater (µg/l)	Surface Water (µg/l)	Soil (µg/l)	Hazard Index	Cancer Risk
Arsenic	9.1E-02	2.3E-04			1.6E-08	2.5E-10				6.3E-02	1.1E-04
Barium	2.3E-02				1.8E-06					2.3E-02	
Cadmium	2.2E-02				1.9E-08	6.1E-11				3.1E-01	6.1E-11
Chromium	1.5E-01				1.6E-08	3.5E-09					3.5E-09
Manganese	4.3E-01				5.1E-06					2.2E-02	
Mercury	4.3E-02				1.2E-09					6.3E-02	
Nickel	1.1E-01				4.9E-09	1.8E-10				1.6E-01	1.8E-09
Thallium	1.5E+00				6.5E-08						
Vanadium					1.8E-08						
Zinc	2.3E-02				6.9E-10					2.0E-02	
Trichloroethylene	7.0E+00	5.2E-06 - 5.9E-03	9.5E-03	1.0E-07 - 7.9E-07	7.4E-06	5.4E-16 - 9.9E-10	5	80		1.9E-01	2.7E-2
1,2-Dichloroethylene	4.6E-03 - 4.3E-01		2.7E-04 - 7.0E-04		2.4E-11 - 1.4E-05		70			2.2E-01	
Toluene					4.3E-11 - 4.7E-09					1.6E-08	
Ethyl benzene					2.0E-10 - 1.2E-08						
Total xylenes					2.4E-10 - 6.8E-08					2.0E-07	
Tetrachloroethylene	5.4E-03	2.0E-05			7.7E-09 - 8.3E-07	2.6E-13 - 2.9E-11	5			1.6E-02	9.9E-06
1,1,1-Trichloroethane	1.7E-03				4.9E-08					4.4E-04	
Vinyl chloride	1.1E-01	5.5E-04			8.2E-04	2.6E-07					

1/ Murray Creek - Fish only.

2/ Does not include risks from vinyl chloride which was not detected in groundwater or soil using quantitative levels of 10 µg/l and up to 12.5 mg/kg, respectively.

3/ Does not include risk from thallium in groundwater which was not detected at the 10 µg/l level of quantification.

7698K

2) Minimize human and environmental exposure to remaining sources of contaminated soil.

3) Minimize exposure to contaminated groundwater during remediation by establishing institutional controls through well-use advisories and provision of an alternative water supply.

4) Protect uncontaminated ground and surface water for current and future use by minimizing migration of contaminants to adjacent ground and surface waters.

5) Restore contaminated drinking water aquifers to drinking water standards (MCLs) resulting in a cumulative risk not to exceed 10^{-4}. MCLs will be met throughout the area of attainment within the shortest time frame technically feasible. The area of attainment defines the area over which cleanup levels will be achieved in the groundwater and encompasses the area outside the boundary of any waste remaining in place (waste management area) and up to the boundary of the contaminant plume. The waste management area for the Logistics Center includes all sources of release that are in close geographical proximity to the Logistics Center. Monitoring for compliance with the cleanup levels will be performed at the Logistics Center boundary and throughout the contaminated plume outside of this boundary.

6) Protect environmental receptors in surface waters by reducing groundwater contaminant concentration in the plume to levels that are safe for biological and human receptors that may be affected at the groundwater discharge point. For the Logistics Center, these levels are specified as Ambient Water Quality Criteria for fish consumption and for aquatic toxicity.

2.0 IDENTIFICATION, SCREENING, AND EVALUATION OF REMEDIAL TECHNOLOGIES AND PROCESS OPTIONS

In this section, the universe of potentially applicable technology types and process options are identified. These process options are then screened to eliminate those process options that could not be technically implemented at the site. Finally, the process options undergo an evaluation step to select one representative process for each technology type. The representative technologies are grouped into remedial alternatives and evaluated in Chapters 3.0 and 4.0.

In this chapter, the technologies are listed and evaluated in tabular form only. Full descriptions and evaluations are given in Appendix A.

2.1 IDENTIFICATION OF TECHNOLOGIES AND PROCESS OPTIONS

Before the universe of potentially applicable technology types and process options are identified, the general response actions must be established. The remedial response actions must satisfy the remedial action objectives specified in Section 1.7.

2.1.1 General Response Actions

General response actions are classes of actions that will satisfy either one or more of the remedial action objectives. The general response actions for soil and for groundwater are listed in Table 2-1. They include no action as well as institutional, containment, and treatment actions. This range allows a wide variety of potential remediation alternatives to be considered in the feasibility study process.

2.1.2 Remedial Technology Types and Process Options

The universe of potentially applicable technology types and process options are identified in this section. Technology types are general categories of technologies or actions within a general response

TABLE 2-1

GENERAL RESPONSE ACTIONS FOR THE FORT LEWIS LOGISTICS CENTER

General Response Actions for Soil	General Response Actions for Groundwater
No Action	No Action
Institutional Actions	Institutional Actions
Containment	Containment
Excavation/Disposal of Contaminated Soil	Collection/Treatment/Discharge
Excavation/Treatment/Disposal	*In Situ* Treatment
In Situ Treatment	

action. Examples of technology types are access restrictions, capping, chemical treatment, or off-site disposal. Process options are specific processes within a technology type. For example, chemical oxidation would be a process option under the broader category of chemical treatment. The technology types and process options for dealing with soil contamination and groundwater contamination are listed on Tables 2-2 and 2-3, respectively. In addition, the remedial action objectives and the general response actions for soil and groundwater are listed in these tables for completeness. The general response actions may refer to one or more remedial action objectives. The following references were some of those used in identifying technologies for soil and groundwater treatment: Guidance on Feasibility Studies under CERCLA (EPA 1985a), Treatment Technology Briefs (EPA 1986a), A Compendium of Technologies in the Treatment of Hazardous Waste (EPA 1987a), Systems to Accelerate *In Situ* Stabilization of Waste Deposits (EPA 1986b), Mobile Treatment Technologies for Superfund Wastes (EPA 1986c), Handbook for Stabilization/Solidification of Hazardous Wastes (EPA 1986d), and Hazardous Waste Processing Technology (Kiang and Metry 1982).

2.2 SCREENING OF TECHNOLOGY TYPES AND PROCESS OPTIONS

The technology types and process options identified in Section 2.1 are screened to eliminate those process options that could not be technically implemented at the site. Site-specific information

TABLE 2-2

Summary of Soil Remedial Action Objectives, General Response Actions, Remedial Technology Types, and Process Options

Media	Remedial Action Objectives[1/]	General Response Actions	Remedial Technology Types	Process Options
Soil		No Action	Not Applicable	Not Applicable
		Institutional Actions	Access Restrictions	Deed restriction, administrative controls, physical controls (fence)
			Monitoring	Monitoring wells, soil gas surveys
		Containment	Capping	Clay and soil, asphalt, concrete, multi-media
			Vertical Barriers	Slurry walls, grout curtain, sheet piling
			Horizontal Barriers	Grout injection, block displacement
			Surface Controls	Grading, revegetation, capping, spraying, erected barriers
		Removal/Disposal of Contaminated Soil	Excavation	Bulldozers, backhoes, cranes, and attachments
			Dewatering	Well points, deep wells, ejector wells, french drains tile drains, pipe drains, trenches, galleries, sumps
			Moving equipment	Bulldozers, loaders, conveyor belt, slurry pipeline
			Long distance hauling	Truck, rail
			On-Site Disposal	RCRA-type trench/cell (if required), landfill, recycling
			Off-Site Disposal	RCRA hazardous waste disposal facility (if required), landfill, recycling

TABLE 2-2 (continued)

Summary of Soil Remedial Action Objectives, General Response Actions, Remedial Technology Types, and Process Options

Media	Remedial Action Objectives[1/]	General Response Actions	Remedial Technology Types	Process Options
Soil (Continued)		Removal/Treatment/Disposal	Excavation (see above)	See above
			Dewatering (see above)	See above
			Moving Equipment (see above)	See above
			Long Distance Hauling (see above)	See above
			Physical Treatment	Soil washing (solvent extraction), soil aeration
			Chemical Treatment	Oxidation, reduction, hydrolysis, catalytic dehydrochlorination, photolysis
			Biological Treatment	Aerobic, anaerobic, combination
			Thermal Treatment	Incineration, pyrolysis, low temperature decomposition
			Immobilization	Vitrification, stabilization,
			On-Site Disposal (see above)	See above
			Off-Site Disposal (see above)	See above
		In Situ Treatment	Physical Treatment	Soil flushing (solvent extraction), soil aeration, soil mixing/aeration
			Chemical Treatment	See above
			Biological Treatment	Aerobic, anaerobic, combination
			Thermal Treatment	Soil heating, low temperature decomposition
			Immobilization	Vitrification, grout injection, soil mixing/stabilization
			Solution Delivery	Flooding, ponding, spraying, ditches, infiltration galleries, injection piping

7675K

TABLE 2-2 (continued)

Summary of Soil Remedial Action Objectives, General Response Actions, Remedial Technology Types, and Process Options

Media	Remedial Action Objectives[1/]	General Response Actions	Remedial Technology Types	Process Options
Soil (Continued)		In Situ Treatment	Solution Recovery	See Dewatering technologies listed above.

1/ See Section 1.7 for a discussion of Remedial Action Objectives.

TABLE 2-3

Summary of Groundwater Remedial Action Objectives, General Response Actions, Remedial Technology Types, and Process Options

Media	Remedial Action Objectives[1/]	General Response Actions	Remedial Technology Types	Process Options
Groundwater		No Action	Not Applicable	Not Applicable
		Institutional Actions	Alternative Water Supplies	Cisterns, uncontaminated aquifer wells, municipal water systems, relocation of intake, commercially supplied, surface water
			Point-of-Entry/Point of Use Treatment	Reverse osmosis, activated carbon adsorption, filtration, ion exchange, distillation, ozonation, ultraviolet radiation
			Access Restrictions	Deed restrictions, administrative controls, fences, abandonment of wells
			Monitoring	Monitoring wells, soil gas surveys
		Containment	Capping	Clay & soil, asphalt, concrete, multi-media, synthetic membrane
			Vertical Barriers	Slurry walls, grout curtain, sheet piling, hydraulic gradient control (pumping wells in combination with recharge of treated groundwater)
			Horizontal Barriers	Grout injection, block displacement, liners
			Surface controls	Grading
		Collection/Treatment/Discharge	Extraction	Well points, deep wells, ejector wells, french drains, tile drains, pipe drains, trenches, infiltration galleries, enhanced extraction, sumps
			Biological Treatment	Aerobic, anaerobic, combination
			Physical Treatment	Adsorption, air stripping, steam stripping, reverse osmosis, liquid-liquid extraction, distillation, ultrafiltration, coagulation/flocculation, flow equalization, oil-water separator, dissolved air flotation, centrifugation, evaporation

TABLE 2-3 (Continued)

Summary of Groundwater Remedial Action Objectives, General Response Actions, Remedial Technology Types, and Process Options

Media	Remedial Action Objectives[1/]	General Response Actions	Remedial Technology Types	Process Options
Groundwater (cont.)		Collection/Treatment/Discharge (cont.)	Chemical Treatment	Chemical oxidation, reduction, hydrolysis, chemical dechlorination, ultraviolet radiation, catalytic hydrogenation, neutralization, precipitation, ion exchange, electrolytic oxidation, wet air oxidation
			Sewage Treatment Plant	Ft. Lewis sewage treatment plant, Upgrade Ft. Lewis sewage treatment plant, publicly-owned treatment works (POTW)
			On-Site Discharge	Sanitary sewer, storm sewer, recharge, reuse/recycle, Ft. Lewis sewage treatment plant, upgrade Fort Lewis sewage treatment plant
			Off-Site Discharge	Pumping to surface water, reuse/recycle, publicly-owned treatment works (POTW), sanitary sewer, storm sewer
		In Situ Treatment	Biological	Aerobic, anaerobic, combination
			Physical Treatment	Aeration, heating, permeable treatment beds
			Chemical Treatment	Hydrolysis, oxidation, reduction, neutralization, polymerization, precipitation, chemical dechlorination

1/ See Section 1.7 for a discussion of Remedial Action Objectives.

obtained during the Remedial Investigation and during previous investigations is used to screen out technology types and process options that could not be effectively implemented. This site-specific information includes contaminant types, concentrations, volumes, and other on-site characteristics (e.g., hydrogeology). Individual process options and/or entire technology types may be eliminated from further consideration during this step. At this point in the Feasibility Study, cost is not considered. Screening of soil technology types and process options is presented in Section 2.2.1, and the groundwater screening is presented in Section 2.2.2

2.2.1 Screening of Soil Technologies

The initial screening of soil technologies is summarized in Table 2-4. Chemical treatment options are not effective for soil contaminated with TCE and DCE, because these compounds are chemically stable and the soil matrix does not allow for adequate reactant mixing. Other treatment technologies are potentially applicable, however. The relatively high soil permeability (10^{-2} to 10^{-1} cm/s) suggests that in situ soil treatment technologies may be feasible. Table 2-4 briefly describes the soil technologies and process options as well as identifies their potential applicability. Those technologies considered feasible are listed in Table 2-5.

2.2.2 Screening of Groundwater Technologies

In this section the results of the technology screening are tabulated. Full descriptions of the evaluation are given in Appendix A.

The screening of the groundwater technologies is summarized in Table 2-6. Alternative water supplies and point-of-entry/point-of-use treatment were eliminated from further consideration since most residents receive water from the Lakewood Water District. All containment process options except for hydrualic gradient control were eliminated from further consideration due to the extent of the plume and the depth of the contaminated aquifer. Similarly, all in situ

TABLE 2-4

INITIAL SCREENING OF SOIL TECHNOLOGIES AND PROCESS OPTIONS

Soil General Response Actions	Remedial Technology Types	Process Options	Description	Screening Comments
No Action	None	Not Applicable	No action.	Required for consideration by NCP.
Institutional	Access Restrictions	Deed Restrictions	Deed would identify source areas and prohibit certain land uses.	Potentially feasible.
		Administrative Controls	Isolate areas of surface contamination and place future land use restrictions on source areas.	Potentially feasible.
		Physical Controls	A fence would be installed around areas of soil contamination.	Potentially feasible.
	Monitoring	Monitoring Wells	Groundwater samples from monitoring wells would be tested for contaminants annually or semiannually.	Potentially feasible.
		Soil Gas Surveys	Soil gas samples would be tested for contaminants annually or semiannually.	Potentially feasible.
Containment	Capping	Clay and Soil	Compacted clay covered with soil over contaminated areas.	Potentially feasible.
		Asphalt	Application of asphalt layer over contaminated areas.	Potentially feasible.
		Concrete	Concrete slab over contaminated areas.	Potentially feasible.
		Multi-Media	Clay over synthetic membrane or other layers and covered with soil applied over contaminated areas.	Potentially feasible.
	Vertical Barriers	Sheet Piling	Metal sheets pounded into earth.	Combination of vertical barriers (slurry walls or grout curtain) and horizontal barriers (grout injection or block displacement) applied to the narrow disposal trenches and the shallow soil depths (10 feet) is essentially equivalent to solidifying the entire waste volume and is thus equivalent to in situ stabilization. Therefore, separate discussion of these process options is redundant, and only in situ stabilization is considered in subsequent sections.
		Slurry Walls	Trench around areas of contamination is filled with a soil (or cement) bentonite slurry.	
		Grout Curtain	Pressure injection of grout in drilled holes arranged in a regular pattern.	
	Horizontal Barriers	Grout Injection	Pressure injection of grout at depth through closely spaced drilled holes.	
		Block Displacement	Slurry injection into notched injection holes.	

7675K

TABLE 2-4 (continued)

INITIAL SCREENING OF SOIL TECHNOLOGIES AND PROCESS OPTIONS

Soil General Response Actions	Remedial Technology Types	Process Options	Description	Screening Comments
Containment (Cont.)	Surface Controls	Grading	Alteration of slope of ground above areas of contamination to prevent infiltration. Usually combined with diversion and collection of rainwater or surface water.	Potentially feasible.
		Revegetation	Vegetation planted above contaminated areas.	Potentially feasible.
		Capping	Use of capping options listed above.	Potentially feasible.
		Spraying	Water spray to reduce airborne dust.	Not feasible because it would promote infiltration and increase groundwater contamination
		Erected Barriers	Erect wind screens to prevent dust transport.	Potentially feasible.
Removal/ Disposal of Contaminated Soil	Excavation	Bulldozers, Backhoes, Cranes, and Attachments	Excavation equipment and processes to remove contaminated soil.	Potentially feasible.
	Dewatering	Well Points	Groups of closely spaced wells usually connected to a header pipe or manifold and pumped by suction or vacuum.	Potentially feasible.
		Deep Wells	Turbine or submersible pump used to pump water from a deep well.	Potentially feasible.
		Ejector Wells	Medium depth wells for water extraction by a jet pump.	Potentially feasible.
		French Drains	Excavated ditch backfilled with coarse gravel for high permeability.	Potentially feasible.
		Pipe/Tile Drains	Perforated or porous pipe placed in excavated trench then backfilled with coarse gravel.	Potentially feasible.
		Trenches/Ditches	Excavated trenches or ditches for water collection.	Potentially feasible.
		Infiltration Galleries	Horizontally laid screens connected to a well used to enhance extraction.	Not necessary due to high existing soil permeability.
		Sumps	Excavated site for central water collection.	Potentially feasible.

7675K

TABLE 2-4 (continued)

INITIAL SCREENING OF SOIL TECHNOLOGIES AND PROCESS OPTIONS

Soil General Response Actions	Remedial Technology Types	Process Options	Description	Screening Comments
Removal/ Disposal of Contaminated Soil (Cont.)	Moving Equipment	Bulldozers	Movements of soil around the site.	Potentially feasible.
		Loaders	Load soil onto conveyor system or into hauling equipment.	Potentially feasible.
		Conveyor Belts	Move soil by conveyor belt.	Potentially feasible.
		Slurry Pipeline	Add liquid to soil and convey via pipeline.	Not feasible because additional contamination of water would result.
	Long-Distance Hauling	Truck	Haul contaminated soil by truck on-site or off-site.	Potentially feasible.
		Rail	Off-site hauling of contaminated soil.	Potentially feasible.
	On-Site Disposal	Landfill	Use of existing landfill or construction of a new landfill.	Not feasible, since the soil is considered a dangerous waste.
		RCRA-Type Trench/ Cell	Soil disposal in a RCRA storage cell.	Potentially feasible.
		Recycling	Recycle/reuse soil.	Not feasible since soil is contaminated.
	Off-Site Disposal	Landfill	Send soil for landfill disposal.	Not feasible, since the soil is considered a dangerous waste.
		RCRA Hazardous Waste TSD Facility	Dispose of soil at RCRA permitted facility.	Potentially feasible.
		Recycling	Reuse of soil.	Not feasible since soil is contaminated.
Removal/Treat-ment/Disposal	Excavation (see above)	See above	See above.	See above.
	Dewatering (see above)	See above	See above	See above.
	Moving Equipment (see above)	See above	See above.	See above.
	Long Distance Hauling (see above)	See above	See above	See above.

7675K

TABLE 2-4 (continued)

INITIAL SCREENING OF SOIL TECHNOLOGIES AND PROCESS OPTIONS

Soil General Response Actions	Remedial Technology Types	Process Options	Description	Screening Comments
Removal/ Treatment/ Disposal (Cont.)	Physical Treatment	Soil Washing	Extraction of organics with solvent in a soil washer.	Potentially feasible.
		Soil Aeration	Volatilization of TCE, DCE by forcing air through excavated soil. Thermal stripping utilizes hot air.	Potentially feasible.
	Chemical Treatment	Oxidation	Destruction of TCE, DCE with ozone, hydrogen peroxide, or other agents.	Not feasible since TCE, DCE are not easily oxidized in soils.
		Reduction	Treatment of soils with a reducing agent (e.g., sodium borohydride) to destroy TCE, DCE.	Not feasible since TCE, DCE not easily reduced.
		Hydrolysis	Reaction with water to destroy TCE, DCE.	TCE, DCE stable toward hydrolysis, so not feasible.
		Catalytic Dehydro-chlorination	High pressure reaction in presence of catalyst.	Not feasible for TCE, DCE soil contamination.
		Photolysis	Treatment of soils with oxidant and ultraviolet light.	Not feasible for soils.
	Biological Treatment	Aerobic	Microbial degradation in an aerobic environment.	Potentially feasible.
		Anaerobic	Microbial degradation in an anaerobic environment.	Potentially feasible.
		Combination	Combine aerobic and anaerobic microorganisms to degrade TCE and DCE.	Potentially feasible.
	Thermal Treatment	Incineration	Destruction of organics by combustion in a fluidized bed, kiln, etc.	Potentially feasible.
		Pyrolysis	Destruction of organics at high temperature in an oxygen starved environment.	Potentially feasible.
		Low Temperature Decomposition	TCE, DCE decomposition at 100-350°C by heating contaminated soil.	Not feasible because TCE, DCE are stable up to high temperatures.
	Immobilization	Vitrification	Convert soil into glassy material by application of electric current.	Potentially feasible.

TABLE 2-4 (continued)

INITIAL SCREENING OF SOIL TECHNOLOGIES AND PROCESS OPTIONS

Soil General Response Actions	Remedial Technology Types	Process Options	Description	Screening Comments
Removal/ Treatment/ Disposal (Cont.)	Immobilization (Continued)	Stabilization	Form low permeability solid matrix from mixture of soil with cement, asphalt, or polymeric materials.	Potentially feasible.
	On-Site Disposal	Recycling	Reuse of treated soil.	Potentially feasible.
		Landfill	Use of existing landfill or construction of a new landfill.	Not necessary since excavated areas require backfill.
		RCRA-Type Trench/ Cell	Soil disposal in a RCRA storage cell.	Not necessary since treated soil is not a hazardous waste.
	Off-Site Disposal	Recycling	Reuse of treated soil.	Potentially feasible.
		Landfill	Use of existing landfill or construction of a new landfill.	Not necessary since excavated areas require backfill.
		RCRA-Type Trench/ Cell	Soil disposal in a RCRA storage cell.	Not necessary since treated soil is not a hazardous waste.
In Situ Treatment	Physical Treatment	Soil Flushing	Extraction of TCE, DCE with a solvent flushed through the soil.	Potentially feasible.
		Soil Aeration	Transfer TCE, DCE into air by forcing air/steam through soil.	Potentially feasible.
		Soil Mixing/ Aeration	Remove TCE and DCE by in situ mixing of soil while blowing air, hot air, or stream through the soil.	Potentially feasible.
	Chemical Treatment (see above)	See Above	See above.	Not feasible, see above.
	Biological Treatment	Aerobic	Microbial degradation in an aerobic environment.	Potentially feasible.
		Anaerobic	Microbial degradation in an anaerobic environment.	Potentially feasible.
		Combination	Use of both aerobic and anaerobic bacteria to degrade TCE, DCE.	Potentially feasible.

TABLE 2-4 (continued)

INITIAL SCREENING OF SOIL TECHNOLOGIES AND PROCESS OPTIONS

Soil General Response Actions	Remedial Technology Types	Process Options	Description	Screening Comments
In Situ Treatment (Cont.)	Thermal Treatment	Soil Heating	Volatilize TCE, DCE by heating contaminated soil with radio frequency generators.	Potentially feasible.
		Low Temperature Decomposition	Decompose TCE, DCE at 100-350°C by heating contaminated soil.	Not feasible because TCE, DCE are stable up to high temperatures.
	Immobilization	Vitrification	Convert soil into glassy material by application of electric current.	Potentially feasible.
		Grout Injection	Injection of cement, asphalt, or polymeric materials into the the ground and encapsulating waste.	Potentially feasible.
		Soil Mixing/ Stabilization	In situ solidification/stabilization of hazardous material by utilizing a crane mounted mixing system.	Potentially feasible.
	Solution Delivery	Flooding	Thin layer of solution spread over the land surface to produce infiltration hy gravity.	Potentially feasible.
		Ponding	Construction of gravity infiltration pond.	Not feasible because the soil is so permeable it would not allow sufficient accumulation for ponding.
		Spraying	Sprinkler-type irrigation systems used to apply solution over the land surface.	Potentially feasible.
		Ditches	Ditch network supplies water for infiltration.	Potentially feasible.
		Infiltration Galleries	Horizontally laid screens which distribute water in the subsurface soils.	Not necessary because contamination is near the surface and the soil is highly permeable.
		Injection Piping	Forced injection of the solution into the soil by pipes or wells.	Not necessary because contamination is near the surface and the soil is highly permeable.
	Solution Recovery	See Dewatering Technologies listed above	See above.	See above.

TABLE 2-5
SOIL PROCESS OPTIONS REMAINING AFTER INITIAL SCREENING

General Response Actions	Remedial Technology Types	Process Options
No Action	None	Not Applicable
Institutional	Access Restrictions	Deed Restrictions Administrative Controls Physical Controls (e.g., fence)
	Monitoring	Monitoring Wells Soil Gas Surveys
Containment	Capping	Clay and Soil Asphalt Concrete Multi-Media
	Surface Controls	Grading Revegetation Capping Erected Barriers
Removal/Disposal of Contaminated Soil	Excavation	Bulldozers, Backhoes, Cranes, and Attachments
	Dewatering	Well Points Deep Wells Ejector Wells French Drains Pipe/tile Drains Trenches/Ditches Sumps
	Moving Equipment	Bulldozers Loaders Conveyor Belts
	Long-Distance Hauling	Truck Rail
	On-Site Disposal	RCRA-Type Trench/Cell
	Off-Site Disposal	RCRA Hazardous Waste Storage Facility
Removal/Treatment/ Disposal	Excavation	See Above
	Dewatering	See Above

TABLE 2-5 (CONTINUED)
SOIL PROCESS OPTIONS REMAINING AFTER INITIAL SCREENING

General Response Actions	Remedial Technology Types	Process Options
Removal/Treatment/ Disposal (Cont.)	Moving Equipment	See Above
	Long-Distance Hauling	See Above
	Physical Treatment	Soil Washing Soil Aeration
	Biological Treatment	Aerobic Anaerobic Combination
	Thermal Treatment	Incineration Pyrolysis
	Immobilization	Vitrification Stabilization
	On-Site Disposal	Recycling Treated Soil
	Off-Site Disposal	Recycling Treated Soil
In Situ Treatment	Physical Treatment	Soil Flushing Soil Aeration Soil Mixing/Aeration
	Biological Treatment	Aerobic Anaerobic Combination
	Thermal Treatment	Soil Heating
	Immobilization	Vitrification Grout Injection Soil Mixing/Stabili-zation
	Solution Delivery	Flooding Spraying Ditches
	Solution Recovery	See Dewatering Technologies Listed Above.

TABLE 2-6

INITIAL SCREENING OF GROUNDWATER TECHNOLOGIES AND PROCESS OPTIONS

Groundwater General Response Actions	Remedial Technology Types	Process Options	Description	Screening Comments
No Action	None	Not Applicable	No action.	Required for consideration by NCP.
Institutional Actions	Alternative Water Supplies	Cisterns	Collection of rainwater in large containers for domestic use.	Not necessary.
		Uncontaminated Aquifer Wells	Installation of groundwater well to pump water from an uncontaminated well.	Now in use in Tillicum and on the Ft. Lewis site.
		Municipal Water Systems	Extension of existing municipal well system to serve residents in the area of influence.	Now in use in Tillicum and on the Ft. Lewis site.
		Relocation of Intake	Relocation of surface water intake to an uncontaminated surface water.	Not necessary.
		Commercially Supplied	Supply commercially bottled water to residents in the area of influence.	Not necessary.
		Surface Water	Use surface water as a water supply for residents in the area of influence.	Not necessary.
	Point-of-Entry/ Point-of-Use Treatment	Reverse Osmosis	Use of high pressure to force water through a membrane leaving contaminants behind.	Not necessary.
		Activated Carbon Adsorption	Adsorption of contaminants onto activated carbon by passing water through carbon column.	Not necessary.
		Filtration	Suspended solids are removed by straining and adsorption onto the porous filter media.	Not necessary.
		Ion Exchange	Contaminated water is passed through a resin bed where ions are exchanged between resin and water.	Not necessary.
		Distillation	Separates miscible liquids.	Not necessary.
		Ozonation	Contaminants are oxidized using ozone.	Not necessary.
		Ultraviolet Radiation	Contaminants are oxidized using ultraviolet radiation.	Not necessary.

TABLE 2-6 (continued)

INITIAL SCREENING OF GROUNDWATER TECHNOLOGIES AND PROCESS OPTIONS

Groundwater General Response Actions	Remedial Technology Types	Process Options	Description	Screening Comments
Institutional Actions (Cont.)	Access Restrictions	Deed Restrictions	Deeds for property in the area of influence would include restrictions on wells.	Potentially feasible.
		Administrative Controls	Regulations would be issued which would put restrictions on uses of groundwater wells within the area of influence.	Now in effect on base/potentially feasible in Tillicum.
		Fences	A fence would be installed around the area underneath which the groundwater is contaminated.	Now in effect on base/not feasible in surrounding area.
		Abandonment of Wells	Abandon residential wells according to State of Washington regulations to prevent the use of contaminated water.	Potentially feasible.
	Monitoring	Monitoring Wells	Groundwater samples from monitoring wells would be tested for contaminants annually or semiannually.	Potentially feasible.
		Soil Gas Surveys	Soil gas samples in the area of the groundwater plume would be tested for contaminants annually or semiannually.	Potentially feasible.
Containment	Capping	Clay and Soil	Compacted clay covered with soil over areas of groundwater contamination.	Capping over areas of groundwater contamination is not feasible due to the extent of the contamination.
		Asphalt	Spray application of a layer of asphalt over areas of groundwater contamination.	
		Concrete	Installation of a concrete slab over areas of groundwater contamination.	
		Multi-Media	Installation of a multi-media cap over areas of groundwater contamination.	
		Synthetic Membrane	Installation of a synthetic membrane over areas of groundwater contamination.	

7675K

TABLE 2-6 (continued)

INITIAL SCREENING OF GROUNDWATER TECHNOLOGIES AND PROCESS OPTIONS

Groundwater General Response Actions	Remedial Technology Types	Process Options	Description	Screening Comments
Containment (cont.)	Vertical Barriers	Slurry Walls	Trench around areas of groundwater contamination is filled with a soil (or cement) bentonite slurry.	All vertical barriers around areas of groundwater contamination except injection are not feasible due to the depth of the aquifer.
		Grout Curtain	Pressure injection of grout in a regular pattern of drilled holes.	
		Sheet Piling	A thick sheet of steel pounded into the ground to contain groundwater contamination.	
		Hydraulic Gradient Control	Groundwater pumped from the aquifer and water recharged into ground to alter groundwater flow pattern and contain the contamination.	Potentially feasible.
	Horizontal Barriers	Grout Injection	Pressure injection of grout at depth through closely spaced drilled holes.	Horizontal barriers underneath areas of groundwater contamination are not feasible due to the depth of the aquifer.
		Block Displacement	In conjunction with vertical barriers, injection of slurry in notched injection holes.	
		Liners	Impermeable liner installed beneath contaminated groundwater.	
	Surface Controls	Grading	Alteration of slope of ground above areas of groundwater contamination to prevent infiltration. Usually combined with diversion and collection of rainwater or surface water.	Surface controls are not feasible due to the extent of contamination and the location of a town above the contaminated groundwater.
Collection/ Treatment/ Discharge	Extraction	Well Points	Groups of closely spaced wells usually connected to a header pipe or manifold and pumped by suction lift or by a vacuum pump.	Not feasible due to depth of aquifer.
		Deep Wells	Turbine or submersible pump used to pump water from a deep well.	Potentially feasible.
		Ejector Wells	Jet pump used to pump water from a medium depth well.	Potentially feasible.

TABLE 2-6 (continued)

INITIAL SCREENING OF GROUNDWATER TECHNOLOGIES AND PROCESS OPTIONS

Groundwater General Response Actions	Remedial Technology Types	Process Options	Description	Screening Comments
Collection/ Treatment/ Discharge (cont.)		French Drains	Excavated ditch backfilled with coarse gravel for high permeability.	Not feasible due to depth of aquifer.
		Tile/Pipe Drains	Ditch backfilled with permeable material containing porous ceramic pipes or perforated pipes for water collection.	Not feasible due to depth of aquifer.
		Trenches	Open trenches for the collection of water.	Not feasible due to depth of aquifer
		Infiltration galleries	One or more horizontally laid screens connected to a well used to enhance extraction.	Not applicable due to high permeability of soil and depth of aquifer.
		Sumps	Excavated area for central water collection.	Not feasible due to depth of aquifer.
		Enhanced Extraction	Extraction/injection to increase flow to extraction well.	Potentially feasible.
	Biological Treatment	Aerobic	Oxidation of contaminants using bacteria requiring oxygen for metabolism.	Potentially feasible.
		Anaerobic	Oxidation of contaminant utilizing bacteria which do not require oxygen.	Potentially feasible.
		Combination	Oxidation of contaminants using a combination of aerobic and anaerobic bacteria.	Potentially feasible.
	Physical Treatment	Adsorption	Attachment of contaminants onto the surface of different adsorption media.	Potentially feasible.
		Air Stripping	Mixing large volumes of air with water in a packed column to promote transfer of VOCs to air.	Potentially feasible.
		Steam Stripping	Mixing of large volume of steam with contaminated water in a packed column to promote transfer of VOCs to steam.	Potentially feasible.

TABLE 2-6 (continued)

INITIAL SCREENING OF GROUNDWATER TECHNOLOGIES AND PROCESS OPTIONS

Groundwater General Response Actions	Remedial Technology Types	Process Options	Description	Screening Comments
Collection/ Treatment/ Discharge (Cont.)	Physical Treatment (Cont.)	Reverse Osmosis	Use of high pressure to force water through a membrane leaving contaminants behind.	Not feasible because large volumes of relatively concentrated solution containing TCE and DCE would be produced and require disposal.
		Liquid-Liquid Extraction	Extraction of contaminants by mixing contaminated water with the appropriate solvent to transfer contaminants to the solvent.	Not feasible due to low concentration of organic contaminants.
		Distillation	Separates miscible liquids.	Not feasible due to low concentration of organic contaminants.
		Ultrafiltration	Use of pressure to force solvent through a membrane leaving large molecules or colloids behind.	Not applicable to removal of low molecular weight organics.
		Coagulation/ Flocculation	Removing suspended solids by formation of aggregates large enough to enable settling.	Not applicable to dissolved organic contaminants.
		Flow Equalization	Holding process effluents in a basin for a certain period of time in order to obtain a stable effluent.	Potentially feasible.
		Oil-Water Separator	Mechanical separation of the immiscible water and oil phases.	Not feasible due to groundwater characteristics.
		Dissolved Air Flotation	Physical separation process by which suspended solids are lifted to the water surface by air forced into solution under elevated pressure.	Not applicable to dissolved organic contaminants.
		Centrifugation	Separation process in which components of a fluid mixture are separated by rapidly rotating the fluid.	Not applicable to dissolved organic contaminants.
		Evaporation	Physical separation of liquid from dissolved or suspended solid by volatilizing the liquid.	Not applicable to the separation of volatile organics from water.
	Chemical Treatment	Chemical Oxidation	Contaminants are oxidized by mixing contaminated water with oxidizing agent.	Potentially feasible.
		Reduction	Reduction of metal ions to solid form.	Not applicable to organic contaminants.

TABLE 2-6 (continued)

INITIAL SCREENING OF GROUNDWATER TECHNOLOGIES AND PROCESS OPTIONS

Groundwater General Response Actions	Remedial Technology Types	Process Options	Description	Screening Comments
Collection/ Treatment/ Discharge (Cont.)	Chemical Treatment (Cont.)	Hydrolysis	Adjustment of pH to accelerate either acid or base-catalyzed destruction of organic molecules.	Not feasible due to low concentrations and stable molecular bonds.
		Chemical Dechlorination	Removal of chlorine atoms from contaminants using high temperatures and pressure.	Potentially feasible.
		Ultraviolet Radiation	Contaminants are oxidized using ultraviolet radiation.	Potentially feasible.
		Catalytic Hydrogenation	Conversion of contaminants to other chemicals by addition of hydrogen to a double bond.	Not feasible due to toxicity of products.
		Neutralization	Neutralization of acidic or basic solution by addition of an acid or base with resultant formation of salts.	Not applicable to groundwater contaminated with neutral organics.
		Precipitation	Removal of dissolved metals by conversion to an insoluble form.	Not applicable to removal of organics.
		Ion Exchange	Contaminated water is passed through a resin bed where ions are exchanged between resin and water.	Not applicable to removal of organics.
		Electrolytic Oxidation	Oxidation of contaminants by immersion of cathodes and anodes in the solution and imposing an electric current on the system.	Not applicable to oxidation of organics.
		Wet Air Oxidation	Oxidation of organics through the use of elevated temperature and elevated pressure.	Not feasible due to low concentrations of organics.
	Sewage Treatment Plant	Ft. Lewis Sewage Treatment Plant	Extracted water pumped to on-site sewage treatment plant for treatment.	Not feasible because on-site sewage treatment plan is close to capacity in the winter.
		Upgrade Ft. Lewis Sewage Treatment Plant	Upgrade existing sewage treatment plant to handle treatment of extracted groundwater.	Potentially feasible.
		POTW	Extracted water is treated at a POTW.	Not feasible (no local POTW).

TABLE 2-6 (continued)

INITIAL SCREENING OF GROUNDWATER TECHNOLOGIES AND PROCESS OPTIONS

Groundwater General Response Actions	Remedial Technology Types	Process Options	Description	Screening Comments
Collection/ Treatment/ Discharge (cont.)	On-Site Discharge	Sanitary Sewer	Extracted water discharged to on-site sanitary sewer.	Not feasible because on-site sewage treatment plant is close to capacity in winter.
		Storm Sewer	Extracted water discharged to on-site storm sewer.	Potentially feasible.
		Recharge	Extracted water recharged into the ground.	Potentially feasible.
		Reuse/Recycle	Extracted water reused or recycled on-site.	Potentially feasible.
		Ft. Lewis Sewage Treatment Plant	Extracted water discharged to on-site sewage treatment plant.	Not feasible because on-site sewage treatment plan is close to capacity in the winter.
		Upgrade Ft. Lewis Sewage Treatment Plant	Upgrade existing sewage treatment plant.	Potentially feasible.
	Off-Site Discharge	Pumping to Surface Water	Extracted water discharged to off-site surface water.	Potentially feasible.
		Reuse/Recycle	Extracted water reused or recycled off-site.	Potentially feasible.
		POTW	Extracted water is discharged to a POTW.	Not feasible (no local POTW).
		Sanitary Sewer	Extracted water is discharged to off-site sanitary sewer.	Not feasible (no local POTW).
		Storm Sewer	Extracted water is discharged to off-site storm sewer.	Potentially feasible.
In Situ Treatment	Biological Treatment	Aerobic	Oxidation of contaminants in groundwater by the addition of aerobic bacteria and air to the aquifer.	Not feasible due to depth of aquifer.
		Anaerobic	Oxidation of contaminants in groundwater by the addition of anaerobic bacteria to the aquifer.	Not feasible due to depth of aquifer.
		Combination	Oxidation of contaminants by the addition of a combination of aerobic and anaerobic bacteria and air to the aquifer.	Not feasible due to depth of aquifer.

7675K

TABLE 2-6 (continued)

INITIAL SCREENING OF GROUNDWATER TECHNOLOGIES AND PROCESS OPTIONS

Groundwater General Response Actions	Remedial Technology Types	Process Options	Description	Screening Comments
In Situ Treatment (cont.)	Physical Treatment	Aeration	Addition of air to contaminated water of the aquifer in order to volatilize organics.	Not feasible due to depth of aquifer.
		Heating	Addition of heat to contaminated water in the aquifer in order to volatilize contaminants or enhance thermal destruction of contaminants.	Not feasible due to depth of aquifer.
		Permeable Treatment Beds	Downgradient trenches backfilled with activated carbon to remove contaminants from water.	Not feasible due to depth of aquifer.
	Chemical Treatment	Hydrolysis	In situ adjustment of pH to accelerate either acid or base-catalyzed destruction of contaminants.	Not feasible due to low concentrations and stable molecular bonds.
		Oxidation	Addition of chemicals to aquifer to oxidize contaminants.	Not feasible due to depth of aquifer and incomplete reagent/ groundwater mixing.
		Reduction	Addition of chemicals to aquifer to reduce metal ions to solid form.	Not applicable to organic contaminants.
		Neutralization	Neutralization of basic or acidic aquifer by addition of an acid or base with resultant formation of salts.	Not applicable to removal of organics.
		Polymerization	Catalyst is used to convert a monomer or a low-order polymer to a large chemical which can be stabilized in place.	Not applicable at low concentrations and TCE and DCE do not polymerize.
		Precipitation	Removal of dissolved metals by in situ conversion to an insoluble form.	Not applicable to removal of organics.
		Chemical Dechlorination	In situ removal of chlorine atoms from contaminants in groundwater.	Not feasible due to the high temperature reaction conditions required.

7675K

treatment options were eliminated. In situ biological and physical treatment options were primarily eliminated because of the difficulty in delivering necessary solutions throughout the depths of the aquifer. In situ chemical treatment was judged to be either ineffective or not applicable due to the depth of the aquifer. See Table 2-6 for an explanation of the individual collection, treatment, and discharge process options eliminated from further consideration, and see Table 2-7 for a listing of the groundwater technologies remaining after the initial screening.

2.3 EVALUATION OF PROCESS OPTIONS

The process options remaining after the initial screening (Section 2.2) are evaluated in this section. The merits of various process options for remediating soil and groundwater contamination are discussed in subsequent sections. In this section the results of evaluations are given in tabular form only. Full descriptions are given in Appendix A.

In this final step before the process options are combined into alternatives dealing with the site as a whole, the process options considered to be implementable are evaluated in greater detail before selecting one process to represent each technology type. One representative process is selected, if possible, for each technology type to simplify the subsequent development and evaluation of alternatives. The representative process provides a basis for developing performance specifications during preliminary design; however, the specific process actually used to implement the remedial action at a site may not be selected until the detailed design phase. In some cases where two or more processes are sufficiently different that one would not adequately represent the other, more than one process option was selected for a technology type.

Process options are evaluated using the same criteria--effectiveness, implementability, and cost--that will be applied during alternative development and during detailed analysis. An important distinction to make is that at this point in the analysis these criteria are applied

TABLE 2-7

GROUNDWATER PROCESS OPTIONS REMAINING AFTER INITIAL SCREENING

General Response Actions	Remedial Technology Types	Process Options
No action	None	Not Applicable
Institutional Actions	Access Restrictions	Deed Restrictions Administrative Controls Abandonment of Wells
	Monitoring	Monitoring Wells Soil Gas Surveys
Containment	Vertical Barriers	Hydraulic Gradient Control
Collection/Treatment/ Discharge	Extraction	Deep Wells Ejector Wells Enhanced Extraction
	Biological Treatment	Aerobic Anaerobic Combination
	Physical Treatment	Adsorption Air Stripping Steam Stripping Flow Equalization
	Chemical Treatment	Chemical Oxidation Chemical Dechlorination Ultraviolet Radiation
	Sewage Treatment Plant	Upgrade Ft. Lewis Sewage Treatment Plant
	On-Site Discharge	Storm Sewer Recharge Reuse/Recycle Upgrade Ft. Lewis Sewage Treatment Plant
	Off-Site Discharge	Pumping to Surface Water Reuse/Recycle Storm Sewer

only to process options and the general response actions they are intended to satisfy, and not to alternatives that treat the site as a whole. Furthermore, this evaluation stresses the effectiveness factors over the implementability and relative cost.

Specific process options are evaluated on their effectiveness in protecting human health and the environment and in satisfying one or more of the general response actions. Each process option is evaluated relative to other processes within the same technology type to preserve the variety of technologies needed to develop a range of alternatives. The following considerations are included in this evaluation:

- The potential effectiveness of process options in handling the estimated areas or volumes of media and meeting the contaminant reduction goals identified in the general response actions. This evaluation applies primarily to the ability of treatment technologies to reduce exposure levels.

- The effectiveness of the process options in protecting human health and the environment during the construction phase.

- The reliability of the process and whether the process has been demonstrated for the contaminants and conditions at the site.

Implementability encompasses both the technical and institutional feasibility of implementing a process option. Since the initial screening procedure uses technical implementability to eliminate the process options that are clearly ineffective, this subsequent, more detailed evaluation of process options places greater emphasis on the institutional aspects of implementability. This determination includes the following considerations:

- The ability to obtain necessary approval from government agencies;

- Compliance with location- and action-specific ARARs or regulations;

- Availability of RCRA treatment, storage, and disposal services and capacity; and

- Availability of necessary equipment and skilled workers to implement the technology.

Cost plays a relatively minor role in the screening of process options at this stage. Relative capital and operating and maintenance (O&M) costs are used rather than detailed estimates. At this stage in the process, the cost analysis is based on engineering judgment, and each process is evaluated as to whether costs are low, medium, or high relative to other process options in the same technology type. When only one process option remains in a given technology type, no cost estimate is given since there are no other process options with which to compare it.

2.3.1 Evaluation of Soil Remedial Process Options

The effectiveness, implementability, and relative cost of the soil process options remaining after the initial screening are evaluated in Table 2-8. Details of the process option evaluation for the no action, institutional, containment, removal/disposal of contaminated soil, removal/treatment/disposal, and in situ treatment actions are presented in Appendix A.

2.3.2 Evaluation of Groundwater Remedial Process Options

The effectiveness, implementability, and relative cost of the groundwater process options remaining after the initial screening are evaluated in Table 2-9. Details of the process option evaluation for

TABLE 2-8

EVALUATION OF SOIL PROCESS OPTIONS

Soil General Response Actions	Remedial Technology Types	Process Options	Effectiveness	Implementability	Relative Cost[a]	Used to Develop Alternatives?[b]
No Action	None	Not Applicable	May not achieve remedial action objectives.	Easily implementable, but may not be acceptable to regulatory agencies, local governments, and the public	-----	Yes
Institutional	Access Restrictions	Physical Controls	Effectiveness depends upon maintenance.	Easily implemented. Restrictions on future land use.	Minimal Cost	Yes
		Deed Restrictions	Effectiveness depends upon continued implementation. Does not reduce contamination.	Administrative decision is easily implemented.	Minimal Cost	Yes
		Administrative Controls	Effectiveness depends on continued enforcement. Does not reduce contamination.	Easily implemented because source areas are under control of the Logistics Center.	Low Capital Low O&M	Yes
	Monitoring	Monitoring Wells	Useful for documenting conditions. Indirect measure of contaminants in source areas. Does not reduce risk by itself.	Easily implemented. Standard technology.	High Capital High O & M	Yes
		Soil Gas Surveys	More appropriate for screening areas of potential contamination than for monitoring, since this is an indirect measurement method. Does not reduce risk by itself.	Easily implemented. Standard technology.	Low Capital Low O & M	No
Containment	Capping	Clay and Soil	Effective, susceptible to cracking, but has self-patching properties.	Easily Implemented. Restrictions on future land use.	Low Capital Low Maintenance	No
		Asphalt	Effective, but very susceptible to weathering and cracking.	Easily Implemented. Restrictions on future land use.	Low Capital High Maintenance	No
		Concrete	Effective, and more resistant to weathering and cracking.	Easily Implemented. Restrictions on future land use.	Moderate Capital High Maintenance	Yes

7675K

TABLE 2-6 (CONTINUED)

EVALUATION OF SOIL PROCESS OPTIONS

Soil General Response Actions	Remedial Technology Types	Process Options	Effectiveness	Implementability	Relative Cost[a]	Used to Develop Alternatives?[b]
Containment (Cont.)	Capping (Cont.)	Multi-Media	Effective, least likely to crack. Likely to hold up over time.	Easily Implemented. Restrictions on future land use.	High Capital Moderate Maintenance	Yes
	Surface Controls	Grading	Effective in association with surface caps. Does not reduce soil contamination, but reduces infiltration.	Easily implemented. Restrictions on future land use.	Moderate Capital Low Maintenance	Yes
		Revegetation	Effective in reducing soil erosion and airborne dust. Because it increases infiltration, only effective in association with surface caps.	Easily implemented. Restrictions on future land use.	Moderate Capital High Maintenance	Yes
		Capping (See above)	See above	See above	High Capital Moderate Maintenance	Yes
		Erected Barriers	Effective in reducing dust transport. Not effective in reducing volatilization, infiltration, or soil contamination.	Easily implemented. Restrictions on future land use.	Moderate Capital Moderate Maintenance	No
Removal/ Disposal of Contaminated Soil	Excavation	Bulldozer, Backhoe, Cranes, and Attachments	Effective in removing soil. Little reduction in mobility, toxicity, or volume of contaminated soil.	Easily implemented - standard construction method. Backfill material needed.	-----	Yes
	Dewatering	Well Points	Effective for depths up to 20-25 ft.	Easily implemented - common dewatering technique.	Low Capital High O&M	Yes
		Deep Wells	May be effective in drawing down the groundwater table, but not practical for dewatering soil near the surface.	Easily implemented. Necessary equipment and workers available.	Moderate Capital Moderate O&M	No

7675K

TABLE 2-8 (CONTINUED)

EVALUATION OF SOIL PROCESS OPTIONS

Soil General Response Actions	Remedial Technology Types	Process Options	Effectiveness	Implementability	Relative Cost[a]	Used to Develop Alternatives?[b]
Removal/ Disposal of Contaminated Soil (Cont.)	Dewatering (Cont.)	Ejector Wells	May be effective in drawing down the groundwater table, but not practical for dewatering soil near the surface.	Easily implemented. Necessary equipment and workers available.	High Capital Moderate O&M	No
		French Drains	Effective in draining groundwater system in areas of high permeability.	Easily constructed. Methods, equipment, and workers readily available. Trench liner probably needed.	Moderate Capital Low O&M	No
		Pipe/Tile Drains	Effective in draining groundwater system in areas of high permeability.	Easily constructed. Methods, equipment, and workers readily available. Trench liner probably needed.	High Capital Low O&M	No
		Trenches/Ditches	Effective in draining groundwater system in areas of high permeability.	Easily constructed, but open trench poses safety hazard during excavation. Trench liner probably needed.	Low Capital Low O&M	No
		Sumps	Effective in collecting water in conjunction with buried drains or trenches.	Easily constructed and implemented.	Low Capital Low O&M	No
	Moving Equipment	Bulldozers	Effective in moving soil short distances and grading the surface topography.	Equipment and workers readily available.	Minimal Capital Moderate O&M	Yes
		Loaders	Effective in moving soil as well as transferring it to vehicles for truck or rail transport.	Equipment and workers readily available.	Minimal Capital Moderate O&M	Yes
		Conveyer Belts	Useful in moving soil, but has limited flexibility when moving soil to a variety of locations.	Technology is available. Useful only over relatively short distances. Extensive equipment decontamination is a drawback.	Minimal Capital Moderate O&M	No

7675K

TABLE 2-8 (CONTINUED)

EVALUATION OF SOIL PROCESS OPTIONS

Soil General Response Actions	Remedial Technology Types	Process Options	Effectiveness	Implementability	Relative Cost[a]	Used to Develop Alternatives?[b]
Removal/ Treatment/ Disposal (Cont.)	Long-Distance Hauling	Truck	Useful in transporting soil on-site or off-site.	Easily implemented. Equipment is widely available. Trucks provide flexibility in transport locations.	Moderate Cost	Yes
		Rail	Useful for off-site soil transportation.	Difficult to implement. Existing rail lines could be utilized as they are near the source areas.	Moderate Cost	No
	On-Site Disposal	RCRA-Type Trench/ Cell	Does not reduce soil contamination, but greatly reduces infiltration and potential groundwater contamination.	Design and construction standards are well developed.	-----	Yes
	Off-Site Disposal	RCRA Hazardous Waste TSD Facility	Effective in reducing on-site contamination, but does not reduce volume or toxicity. Disposal at a permitted facility should greatly reduce the mobility of TCE and DCE.	Nearest permitted facility is at Arlington, Oregon.	-----	Yes
Removal/Treatment/ Disposal	Excavation (see above)	See above	See above	See above	See above	See above
	Dewatering (see above)	See above	See above	See above	See above	See above
	Moving Equipment (see above)	See above	See above	See above	See above	See above
	Long Distance Hauling (see above)	See above	See above	See above	See above	See above

7675K

TABLE 2-8 (CONTINUED)

EVALUATION OF SOIL PROCESS OPTIONS

Soil General Response Actions	Remedial Technology Types	Process Options	Effectiveness	Implementability	Relative Cost[a]	Used to Develop Alternatives?[b]
Removal/ Treatment/ Disposal (Cont.)	Physical Treatment	Soil Washing	Water would not be effective as a washing solution. Nonvolatile organic solvent systems may be necessary.	Laboratory testing necessary to choose appropriate solvent and operating conditions. Otherwise, relatively easy to implement.	Moderate Capital High O&M	Yes
		Soil Aeration	Can be effective with unaggregated soil particles. Performance improved if hot air is used for thermal stripping. Effectiveness greatly reduced if TCE, DCE are associated with heavy organic phase (e.g., oil and grease).	Mechanical aerators and pneumatic conveyors are available. Laboratory testing required to establish effectiveness and design parameters. Possible air pollution concerns should be addressed.	Low Capital High O&M	Yes
	Biological Treatment	Aerobic	Ability of aerobic bacteria to degrade TCE and DCE has not been consistently demonstrated.	Necessary technology not available.	Low Capital Low O&M	No
		Anaerobic	Ability of anaerobic bacteria to degrade TCE and DCE has not been consistently demonstrated.	Necessary technology not available.	Moderate Capital Moderate O&M	No
		Combination	Not demonstrated to degrade TCE and DCE.	Necessary technology not available.	High Capital High O&M	No
	Thermal Treatment	Incineration	TCE difficult to destroy based on EPA's heat of combustion values. Technology expensive for organic contaminants at low concentrations in soil.	Technology is well developed. Mobile units are currently available for relatively small soil quantities. Off-site treatment is available. Air pollution concerns should be addressed as well as waste water generation.	High Capital High O&M	No
		Pyrolysis	TCE difficult to destroy based on EPA's heat of combustion values.	Large-scale mobile units are not yet available. Air pollution concerns should be addressed.	High Capital High O&M	No

7675K

TABLE 2-8 (CONTINUED)

EVALUATION OF SOIL PROCESS OPTIONS

Soil General Response Actions	Remedial Technology Types	Process Options	Effectiveness	Implementability	Relative Cost[a]	Used to Develop Alternatives?[b]
Removal/ Treatment/ Disposal (Cont.)	Immobilization	Vitrification	Effective but not appropriate for soil containing low concentrations of volatile organic contaminants.	Demonstrated on a field scale. Laboratory and pilot-scale testing required to document effectiveness and determine operating conditions. Potential air pollution problems are remediated with off-gas collection and combustion.	High Capital Low Maintenance	No
		Stabilization	Effective in reducing TCE and DCE mobility, although leachability can be a problem.	Many stabilization processes are in the late development or verification stages. Laboratory and pilot-scale studies needed to document effectiveness and determine operating conditions. Future land use restrictions.	Moderate Capital Low Maintenance	Yes
	On-Site Disposal	On-Site Recycling	Reuse of treated soil for backfill or other uses is potentially beneficial.	Easily implemented	-----	Yes
	Off-Site Disposal	Off-Site Recycling	Reuse of treated soil for backfill or other uses is potentially beneficial.	Implementability a potential problem even with documented soil treatment.	-----	No
In Situ Treatment	Physical Treatment	Soil Flushing	Recent field studies on soil flushing indicate that this technology was not effective in extracting organic contaminants.	Due to the high water table, recovery of solvent containing the contaminants before it encounters groundwater would be difficult if not impossible.	Moderate Capital High O&M	No
		Soil Aeration	Effective for gravelly, sandy soils unless TCE and DCE are associated with a heavy organic phase (e.g., oil and grease).	Field tests for TCE have been performed, so partially demonstrated technology. Possible air pollution concerns should be addressed.	Moderate Capital High O&M	Yes
		Soil Mixing/ Aeration	Might be more effective than soil aeration since the soil is mixed.	Pilot-scale testing would be necessary to document performance. Possible air pollution concerns should be discussed.	Moderate Capital High O&M	Yes

7675K

TABLE 2-8 (CONTINUED)

EVALUATION OF SOIL PROCESS OPTIONS

Soil General Response Actions	Remedial Technology Types	Process Options	Effectiveness	Implementability	Relative Cost[a]	Used to Develop Alternatives?[b]
In Situ Treatment (Cont.)	Biological Treatment	Aerobic	Ability of aerobic bacteria to degrade TCE and DCE has not been consistently demonstrated.	Necessary technology not available.	Low Capital Low O&M	No
		Anaerobic	Ability of aerobic bacteria to degrade TCE and DCE has not been consistently demonstrated.	Necessary technology not available.	Moderate Capital Moderate O&M	No
		Combination	Not demonstrated to degrade TCE and DCE.	Necessary technology not available.	High Capital High O&M	No
	Thermal Treatment	Soil Heating	Can volatilize TCE and DCE with extensive energy input. Heat and mass transfer mechanisms less effective than with soil aeration with hot air.	Technology not demonstrated. Would require extensive testing to be implemented.	-----	No
	Immobilization	Vitrification	Effective but not appropriate for soil containing low concentrations of volatile organic contaminants.	Laboratory and pilot-scale testing required to document effectiveness and determine operating conditions. Air pollution concerns addressed with off-gas collection and combustion.	High Capital Low Maintenance	No
		Grout Injection	Effective in reducing TCE and DCE mobility through encapsulation. Not as effective as a concrete cap, though, due to higher permeability of grout.	Many stabilization processes are in the late development or verification stages. Laboratory and pilot-scale studies needed to document effectiveness and determine operating conditions. Similar to a concrete cap in performance, but more difficult to implement.	Moderate Capital Low Maintenance	No

TABLE 2-8 (CONTINUED)

EVALUATION OF SOIL PROCESS OPTIONS

Soil General Response Actions	Remedial Technology Types	Process Options	Effectiveness	Implementability	Relative Cost[a]	Used to Develop Alternatives?[b]
In Situ Treatment (Cont.)	Immobilization (Cont.)	Soil Mixing/ Stabilization	Should be more effective than grout injection, since stabilization materials are intimately mixed with the soil.	Not a demonstrated technology, thus laboratory and pilot-scale testing would be necessary to demonstrate effectiveness.	Moderate Capital Low Maintenance	Yes

a/ Cost comparison is between process options within a particular remedial technology type. Thus, no cost values are given if there is only one process option within a remedial technology type.

b/ Within a given technology type, where one process option was clearly superior, it was retained for use in developing alternatives. In some instances, various process options were equally suitable and a representative alternative was chosen for further detailed evaluation if it could adequately represent the others. Consult text for details.

TABLE 2-9

EVALUATION OF GROUNDWATER PROCESS OPTIONS

Groundwater General Response Action	Remedial Technology Types	Process Options	Effectiveness	Implementability	Relative Cost[a]	Used to Develop Alternatives?[b]
No Action	None	Not Applicable	Health risks due to ingestion of groundwater have been eliminated because residents have been supplied with an alternative water supply (Lakewood Water District). Does not improve groundwater quality.	Easily implemented, but may not be acceptable to regulatory agencies, the local government, and the public.	-----	Yes
Institutional	Access Restrictions	Deed Restrictions	Residents could still use contaminated water from existing wells. No contaminant reduction is achieved.	Implementation simple for the Ft. Lewis property. Implementation in Tillicum complicated by the number of landowners overlying plume.	Low Capital Low O & M	Yes[c]
		Administrative Controls	Residents could still use contaminated water from existing wells. No contaminant reduction is achieved.	Must be approved and implemented by the appropriate local governments.	Low Capital Low O & M	Yes[c]
		Abandonment of Wells	Effective in preventing use of contaminated groundwater from existing wells.	Would not be acceptable to the owners of existing wells.	Low Capital No O & M	No
	Monitoring	Monitoring Wells	Useful for documenting conditions. Direct measure of contaminants in groundwater. Does not reduce risk by itself.	Easily implemented. Standard technology.	High Capital High O & M	Yes[c]
		Soil Gas Surveys	More appropriate for screening areas of potential contamination than for monitoring, since this is an indirect measurement method. Detection limits restrict use at fringes of plume. Does not reduce risk by itself.	Easily implemented. Standard technology.	Low Capital Low O & M	No

TABLE 2-9 (cont.)

EVALUATION OF GROUNDWATER PROCESS OPTIONS

Groundwater General Response Action	Remedial Technology Types	Process Options	Effectiveness	Implementability	Relative Cost[a]	Used to Develop Alternatives?[b]
Containment	Vertical Barriers	Hydraulic Gradient Control	Can shorten cleanup time for contaminated groundwater downgradient of recharge point. Also provides a barrier to prevent further migration of contaminated water off-site.	May violate state regulations.	-----	Yes
Collection/ Treatment/Discharge	Extraction	Deep Wells	More effective than ejector wells for pumping groundwater from transmissive soil.	Necessary equipment and workers readily available.	Low Capital Low O & M	Yes
		Ejector Wells	Large number of ejector wells would be required because of limited pumping capacity.	Necessary equipment and workers readily available.	Moderate Capital Moderate O & M	No
		Enhanced Extraction	May be used to accelerate cleanup of groundwater, but identical to recharge.	May violate state regulations if water is injected directly into aquifer to increase groundwater gradient.	High Capital High O & M	No
	Biological Treatment	Aerobic	Ability of aerobic bacteria to degrade TCE and DCE has not been consistently demonstrated.	Necessary technology not available.	Low Capital Low O & M	No
		Anaerobic	Ability of anaerobic bacteria to degrade TCE and DCE has not been consistently demonstrated.	Necessary technology not available.	Moderate Capital Moderate O & M	No
		Combination	Ability of aerobic and anaerobic bacteria to degrade TCE and DCE has not been consistently demonstrated.	Necessary technology not available.	High Capital High O & M	No

TABLE 2-9 (cont.)

EVALUATION OF GROUNDWATER PROCESS OPTIONS

Groundwater General Response Action	Remedial Technology Types	Process Options	Effectiveness	Implementability	Relative Cost[a]	Used to Develop Alternatives?[b]
Collection/ Treatment/Discharge (cont.)	Physical Treatment	Adsorption	Effective and reliable. Well-developed technology. Disposal or regeneration of adsorption media required.	Well-suited to on-site construction. Pilot plant studies or laboratory treatability studies may be required.	High Capital High O & M	Yes
		Air Stripping	Effective and reliable. Well-developed technology. Gaseous emissions may need to be controlled.	Modular design of packed towers makes air stripping readily implementable. Treatability studies may be required.	Moderate Capital Moderate O & M	Yes
		Steam Stripping	Not required for removal of TCE and DCE. Less expensive air stripping more appropriate.	Modular design of packed towers makes steam stripping readily implementable.	Moderate Capital High O & M	No
		Flow Equalization	Effective and reliable for obtaining stable flow to treatment system. Not effective for actual treatment of contamination.	Equipment readily available.	Low Capital Low O & M	Yes
	Chemical Treatment	Chemical Oxidation	Effective and reliable when used in combination with UV light. Destruction of contaminants.	Equipment readily available. Pilot plant studies or laboratory treatability studies may be required.	Moderate Capital High O & M	Yes
		Chemical Dechlorination	Ability to dechlorinate DCE and TCE has not been demonstrated. Not applicable to aqueous streams.	Necessary technology not available.	High Capital High O & M	No
		Ultraviolet Radiation	Ability to degrade TCE and DCE has not been demonstrated. Effective when used in combination with chemical oxidation.	Equipment readily available.	Moderate Capital Moderate O & M	Yes
	Sewage Treatment Plant	Upgrade Ft. Lewis Sewage Treatment Plant	TCE and DCE not effectively removed using conventional biological treatment. Dilution of sewage with groundwater low in organics may cause system upsets.	Sewage treatment plant and sanitary sewer lines would require additional capacity. Revised permit would be required.	-----	No

TABLE 2-9 (cont.)

EVALUATION OF GROUNDWATER PROCESS OPTIONS

Groundwater General Response Action	Remedial Technology Types	Process Options	Effectiveness	Implementability	Relative Cost[a]	Used to Develop Alternatives?[b]
Collection/ Treatment/Discharge (cont.)	On-Site Discharge	Storm Sewer	Effective and reliable discharge method if storm sewer discharges to Murray Creek.	Discharge permit would be required to pump treated groundwater to surface water.	Low Capital Low O & M	Yes
		Recharge	Effective and reliable discharge method. May accelerate cleanup of downgradient groundwater.	May violate state regulations if treated groundwater is injected directly into the aquifer.	Moderate Capital Moderate O & M	Yes
		Reuse/Recycle	Possible health risk if there is an upset in the treatment system, although this is highly unlikely.	Easily implementable since 16" water distribution mains are already in place.	Low Capital Moderate O & M	Yes
		Upgraded On-Site Sewage Treatment Plant	Dilution of sewage with groundwater low in organics may cause system upsets.	Sewage treatment plant would need revised permit.	High Capital High O & M	No
	Off-Site Discharge	Pumping to Surface Water	Effective and reliable discharge method.	Discharge permit would be required to pump treated groundwater to surface water.	High Capital Low O & M	Yes
		Reuse/Recycle	Possible health risk if there is an upset in the treatment system, although this is highly unlikely.	Tillicum water demands may increase. Reuse of treated groundwater could be beneficially utilized.	Low Capital Moderate O & M	Yes
		Storm Sewer	The nearest storm sewers to the treatment plant may or may not have adequate capacity.	Discharge permit would be required to pump treated groundwater to surface water.	Low Capital Low O & M	No

a/ Cost comparison is between process options within a particular remedial technology type. Thus, no cost values are given if there is only one process option within a remedial technology type.

b/ Within a given technology type, where one process option was clearly superior, it was retained for use in developing alternatives. In some instances, various process options were equally suitable and a representative alternative was chosen for further detailed evaluation if it could adequately represent the others. Consult text for details.

c/ These options retained for use in combination with pump and treat alternatives. (See Section A.2.2 of Appendix A for additional discussion.)

the no action, institutional, collection/discharge, containment, and collection/treatment/discharge general response actions are presented in Appendix A.

2.4 SUMMARY OF TECHNOLOGY AND PROCESS OPTION SCREENING AND EVALUATION

Tables 2-10 and 2-11 present the soil and groundwater process options remaining after the initial screening and evaluation. These process options will be combined into alternatives that treat the site as a whole in the second phase of the Feasibility Study. Once the process options have been combined into alternatives, more detailed information about the technology process options will be collected. In the final phase of the Feasibility Study, the alternatives remaining will undergo a detailed analysis.

TABLE 2-10

SOIL PROCESS OPTIONS REMAINING

AFTER PROCESS OPTION EVALUATION

Soil General Response Action	Technology Type	Process Option
No Action	None	Not Applicable
Institutional	Access Restrictions	Deed Restrictions Administrative Controls Physical Controls (e.g., Fence)
	Monitoring	Monitoring Wells
Containment	Capping	Concrete Multi-Media
	Surface Controls	Grading Revegetation Capping (see above)
Removal/Disposal of Contaminated Soil	Excavation	Bulldozers, Backhoes, Cranes, and Attachments
	Dewatering	Well Points
	Moving Equipment	Bulldozers Loaders
	Long-Distance Hauling	Truck
	On-Site Disposal	RCRA-type Landfill
	Off-Site Disposal	RCRA Hazardous Waste Disposal Facility
Removal/Treatment/ Disposal	Excavation	Bulldozers, Backhoes, Cranes, and Attachments
	Dewatering	Well Points
	Moving Equipment	Bulldozers Loaders
	Long-Distance Hauling	Truck

TABLE 2-10 (Cont.)

SOIL PROCESS OPTIONS REMAINING

AFTER PROCESS OPTION EVALUATION

Soil General Response Action	Technology Type	Process Option
Removal/Treatment/ Disposal (Cont.)	Physical Treatment	Soil Washing Soil Aeration
	Immobilization	Stabilization
	On-Site Disposal	Recycling
In Situ Treatment	Physical Treatment	Soil Aeration Soil Mixing/Aeration
	Immobilization	Soil Mixing/Stabilization

TABLE 2-11

GROUNDWATER PROCESS OPTIONS REMAINING

AFTER PROCESS OPTION EVALUATION

Groundwater General Response Action	Technology Type	Process Option
No Action	None	Not Applicable
Institutional	Access Restrictions	Deed Restrictions[a/] Administrative Controls[a/]
	Monitoring	Monitoring Wells[a/]
Containment	Vertical Barriers	Hydraulic Gradient Control[b/]
Collection/Treatment/ Discharge	Extraction	Deep Wells
	Physical Treatment	Adsorption Air Stripping Flow Equalization
	Chemical Treatment	Chemical Oxidation/ Ultraviolet Light
	On-Site Discharge	Storm Sewer Recharge Reuse/Recycle
	Off-Site Discharge	Pumping to Surface Water Reuse/Recycle

a/ These options retained for use in combination with pump and treat alternatives.

b/ Hydraulic gradient control consists of groundwater pumping in combination with recharge. In the rest of the report, this option is called recharge of treated groundwater.

3.0 DEVELOPMENT OF REMEDIATION ALTERNATIVES FOR SOIL SOURCE AREAS

3.1 ALTERNATIVE DEVELOPMENT METHODOLOGY

The feasible technologies for remediation of the soil source areas are grouped into remedial alternatives, and those alternatives are subjected to a preliminary evaluation and screening. The feasibility study process is summarized in Figure 3-1. A rigorous preliminary screening of remediation technologies has been performed in Section 2.0. The second step, development of alternatives, is described in this section and Section 4.0. Detailed evaluation of these final candidate alternatives will be conducted in Chapters 5.0 and 6.0, completing the process.

The groundwater and soil remediation alternatives are developed separately in this Feasibility Study. The soil source area remediation is discussed in Chapters 3.0 and 5.0, while groundwater remediation is discussed in Chapters 4.0 and 6.0.

A major requirement of the feasibility study process according to EPA guidance is to develop a wide range of alternatives. The range of alternatives included alternatives that achieve different cleanup levels, alternatives that require different times for cleanup, and alternatives that treat different volumes of the contaminated media.

For soil source area remediation, the following range of alternatives were developed:

- A number of treatment alternatives to permanently detoxify the contaminated soil and thereby eliminate the need for long-term management (including monitoring) at the site.

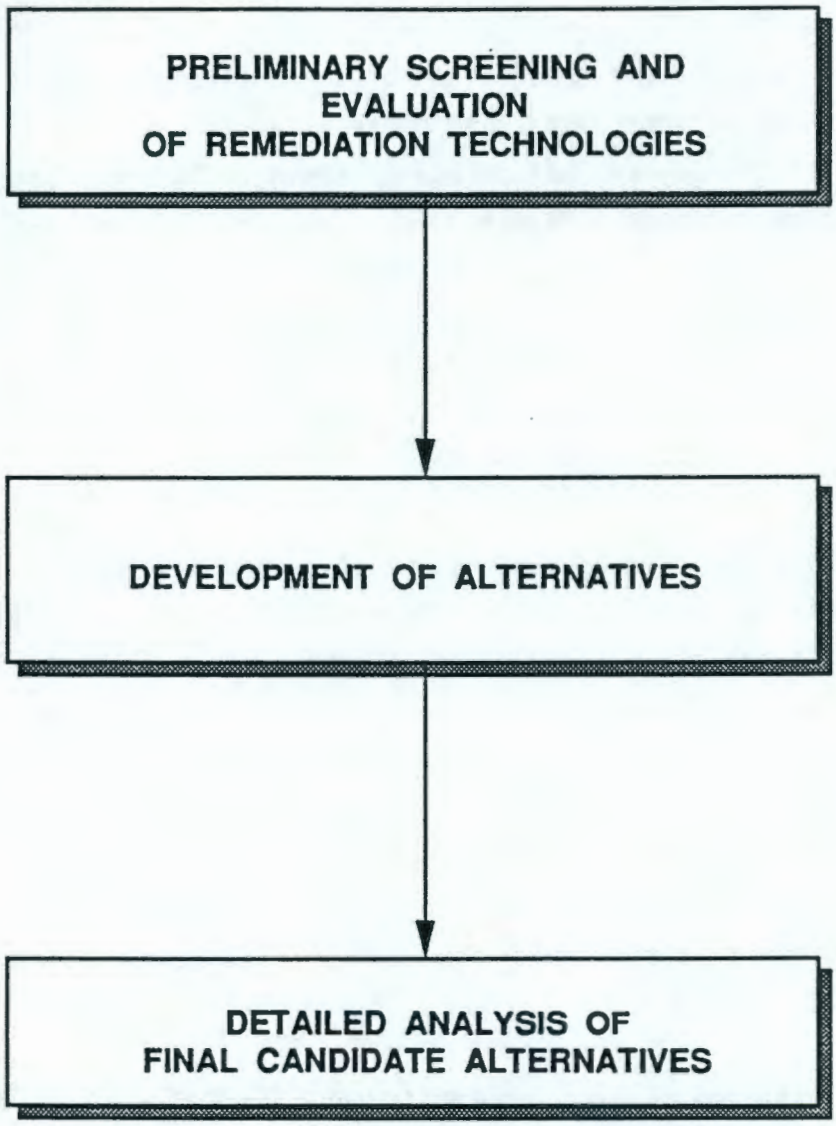

FORT LEWIS LOGISTICS CENTER
REMEDIAL INVESTIGATION / FEASIBILITY STUDY

FIGURE 3-1
SUMMARY OF THE
FEASIBILITY STUDY PROCESS

Section No.
Revision No.
Revision Date:
Page of

envirosphere company
In Association with
SHANNON & WILSON

- One or more alternatives that involve only containment of the waste, with little or no treatment, to protect human health and the environment by preventing potential exposure and/or by reducing mobility.

- A no action alternative.

For groundwater response actions, alternatives addressed not only cleanup levels but also the time frame within which the remediation objectives might be achieved. Depending on specific site conditions and the aquifer characteristics, alternatives were developed that achieved action levels within varying time frames using different technologies.

A methodology was used which compares all of the process options, identifies the most appropriate ones, and assembles alternatives composed of the best process options for a given set of circumstances. This methodology is summarized in Figure 3-2. The range of alternatives developed is illustrated in Table 3-1. Similar process options were compared, the most appropriate ones were identified, and final candidate alternatives were assembled.

All of the process options for soil source area remediation are evaluated and compared. As shown in Figure 3-2 and Table 3-1, based on the comparison of the process options, one alternative from each of the categories is retained for detailed evaluation in Chapter 5.0. The available process options for groundwater remediation are evaluated and compared in Chapter 4.0. One remedial alternative is retained for each of the categories for detailed evaluation in Chapter 6.0.

Each of the technologies were evaluated for "Effectiveness," "Implementability," and cost using the following criteria:

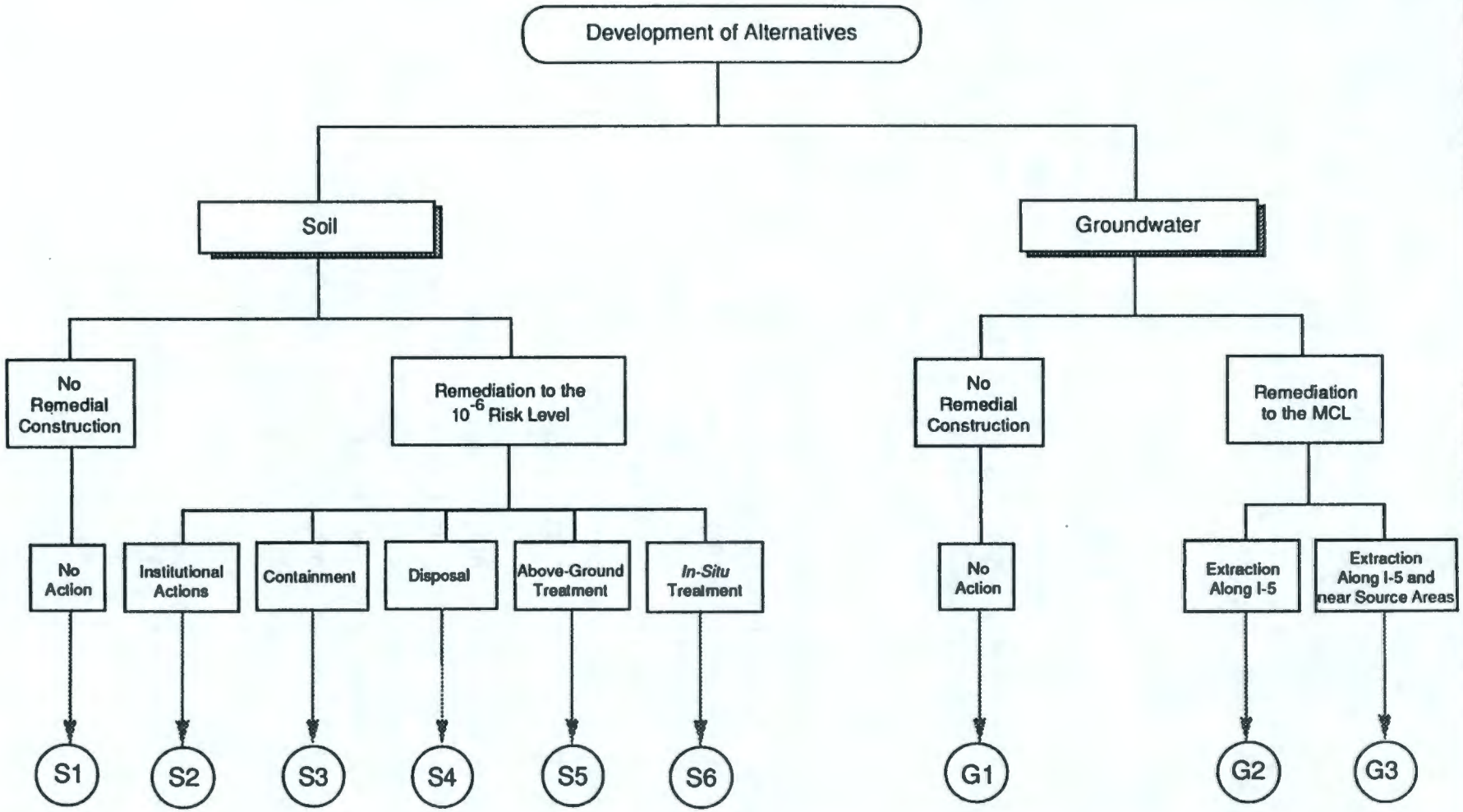

FORT LEWIS LOGISTICS CENTER
REMEDIAL INVESTIGATION / FEASIBILITY STUDY

FIGURE 3-2
DEVELOPMENT OF ALTERNATIVES FOR SOIL SOURCE AREA AND GROUNDWATER REMEDIATION

Section No.
Revision No.
Revision Date:
Page of

envirosphere company
In Association with
SHANNON & WILSON

TABLE 3-1

SUMMARY DESCRIPTIONS OF REMEDIATION ALTERNATIVES

Alternative	Description
SOIL	
S1	No Action; monitoring only
S2	Institutional restrictions.
S3	Containment of soil exceeding the 10^{-6} risk level.
S4	Excavation and disposal of soil exceeding the 10^{-6} risk level.
S5	Excavation and treatment of soil exceeding the 10^{-6} level.
S6	*In situ* treatment of soil exceeding the 10^{-6} risk level.
GROUNDWATER	
G1	No Action; monitoring only
G2	Extraction by Scheme 1 and subsequent treatment of groundwater to 10% of the MCL[1/], plus institutional restrictions.
G3	Extraction by Scheme 2 and subsequent treatment of groundwater to 10% of the MCL, plus institutional restrictions.

1/ MCL = maximum contaminant level for TCE (5 ug/l).

- Effectiveness

A key aspect of the screening evaluation was the effectiveness of each alternative in protecting human health and the environment. Each alternative was evaluated as to the protectiveness it would provide and the reductions in toxicity, mobility, or volume it would achieve. Both short- and long-term components of protectiveness were evaluated; short-term referring to the construction and implementation period, and long-term referring to the period after the remedial action is complete. Reduction of toxicity, mobility, or volume refers to changes in one or more characteristics of the hazardous substances or contaminated media by the use of treatment that decreases the threats or risks associated with the hazardous material.

- Implementability

Implementability, as a measure of both the technical and administrative feasibility of constructing, operating, and maintaining a remedial action alternative, was used during screening to evaluate the combinations of process options with respect to conditions at the Logistics Center. "Technical feasibility" refers to the ability to construct, reliably operate, and meet technology-specific regulations for process options until a remedial action is complete; it also includes operation, maintenance, replacement, and monitoring of technical components of an alternative, if required, into the future after the remedial action is complete. "Administrative feasibility" refers to the ability to obtain approvals from other offices and agencies, the availability of treatment, storage, and disposal services and capacity, and the requirements for, and availability of, specific equipment and technical specialists.

- Cost

  Both capital and O&M costs were considered during the screening of alternatives. The evaluation included those O&M costs that would be incurred for as long as necessary, even after the initial remedial action is complete. Likewise, potential future remedial action costs were considered during alternative screening to the extent they can be defined. Present worth analyses were used during alternative screening to evaluate expenditures that occur over different time periods. The present worth cost was based on a 10 percent discount and a 30-year operating period (EPA 1985a). By discounting all costs to a common base year, the costs for different remedial action alternatives were compared on the basis of a single figure for each alternative.

3.2 SOIL SOURCE AREA CONTAMINATION

As described in the Endangerment Assessment Report (Envirosphere 1988c), the East Gate Disposal Yard soil borings were the only borings in which detectable levels of TCE, DCE, and other organics were found above the water table. For additional information, the reader is also referenced to the discussion found in Section 1.5 of this report.

Based on the results of the Remedial Investigation and Endangerment Assessment, the following contamination characteristics of source area soils were assumed and formed the basis of the process options evaluation and alternative development described in this section.

- Soil contamination is confined to 24 disposal trenches on-site.
- Trenches are roughly parallel in configuration.
- Areal extent of trenches is approximately 100' x 200'.
- Depth to groundwater is approximately 10'.

- Total volume of contaminated soil is approximately 7,000 cubic yards.

- Contaminants are at levels of 240 mg/kg for TCE and 282 mg/kg for DCE.

3.3 DESCRIPTION AND EVALUATION OF SOIL PROCESS OPTIONS

3.3.1 No Action

Description

The no action alternative is an option required by the National Contingency Plan for purposes of comparison with remediation alternatives. Under this option, no actions would be taken to remediate contaminated soils. A long-term monitoring program would be implemented to provide updated information on potential contaminant migration. Existing on-site monitoring wells would be sampled on a routine basis, and the program modified as conditions dictate. No administrative controls would be implemented.

Evaluation

The no action alternative was not evaluated against effectiveness, implementability, and cost criteria because this alternative will be carried forward regardless of the outcome of the evaluation.

3.3.2 Institutional Actions

Description

Institutional actions include activities used to monitor groundwater in the area of soil contamination, and to also restrict workers and the public from direct contact with source area soils (access restrictions). Thus, access restrictions and a long-term monitoring program would be implemented as part of this alternative.

Access restrictions would consist of the placement of a security fence and the posting of warning signs in the immediate vicinity of the soil source areas, and shall serve as a protective barrier against unauthorized personnel entering these areas. Security is already provided at Fort Lewis to restrict private citizens from entering the site and troops will be prevented from training in the area. Also, deed restrictions on Fort Lewis property would prevent future land owners from potential contact with these soil source areas for the long-term, since construction would not be permitted. A long-term monitoring program utilizing existing monitoring wells would also be implemented to provide updated information on the migration of contaminants, and the program modified as conditions dictate.

Evaluation

The institutional actions alternative was not evaluated against effectiveness, implementability, and cost criteria, because the purpose of this evaluation is to compare similar alternatives and select the best. Since there are no similar alternatives with which to compare it, this evaluation cannot be performed. This alternative will be carried forward to the detailed analysis where a complete evaluation, using the nine evaluation criteria (see Section 5.1), will be performed.

3.3.3 Containment

Two different options are being considered for containing potential migration of contaminants by reducing mobility through the use of impermeable caps over the existing soil source areas. The first option involves the use of a multi-media cap, while the second option uses a concrete cap. Both alternatives are described and evaluated in the following sections. Details of the evaluation are given in Appendix B.

3.3.3.1 Description of Multimedia Cap

In this containment scheme, cover of the existing soil source area will be provided by a synthetic liner and two feet of clay, along with appropriate geotextile, mulch, and vegetation. This cap will be graded at a 1 percent slope from the center and extend approximately 50 feet beyond the known boundaries of the existing trenches. A perimeter drainage ditch will also be provided to allow for proper runoff of collected precipitation. A diagram of the proposed multi-media cap is shown in Figure 3-3.

3.3.3.2 Description of Concrete Cap

In this containment scheme, a cover of 4-6" of Portland cement with appropriate base is used in lieu of a multi-media cap. The same grading and drainage as the multi-media cap shall be provided. No soil or vegetation cover is proposed to overlay the concrete cap (see Figure 3-4).

3.3.3.3 Evaluation of Containment Options

The multimedia and concrete cap containment systems were evaluated against effectiveness, implementability, and cost criteria. For a summary of the evaluation, see Table 3-2. Details of the evaluation are presented in Appendix B.

The concrete cap is chosen as the containment option (S3) to be carried forward to detailed analysis because it is more easily implemented than the multimedia cap while providing the same high degree of effectiveness for protecting human health and the environment. The ROM costs associated with constructing each option were equivalent.

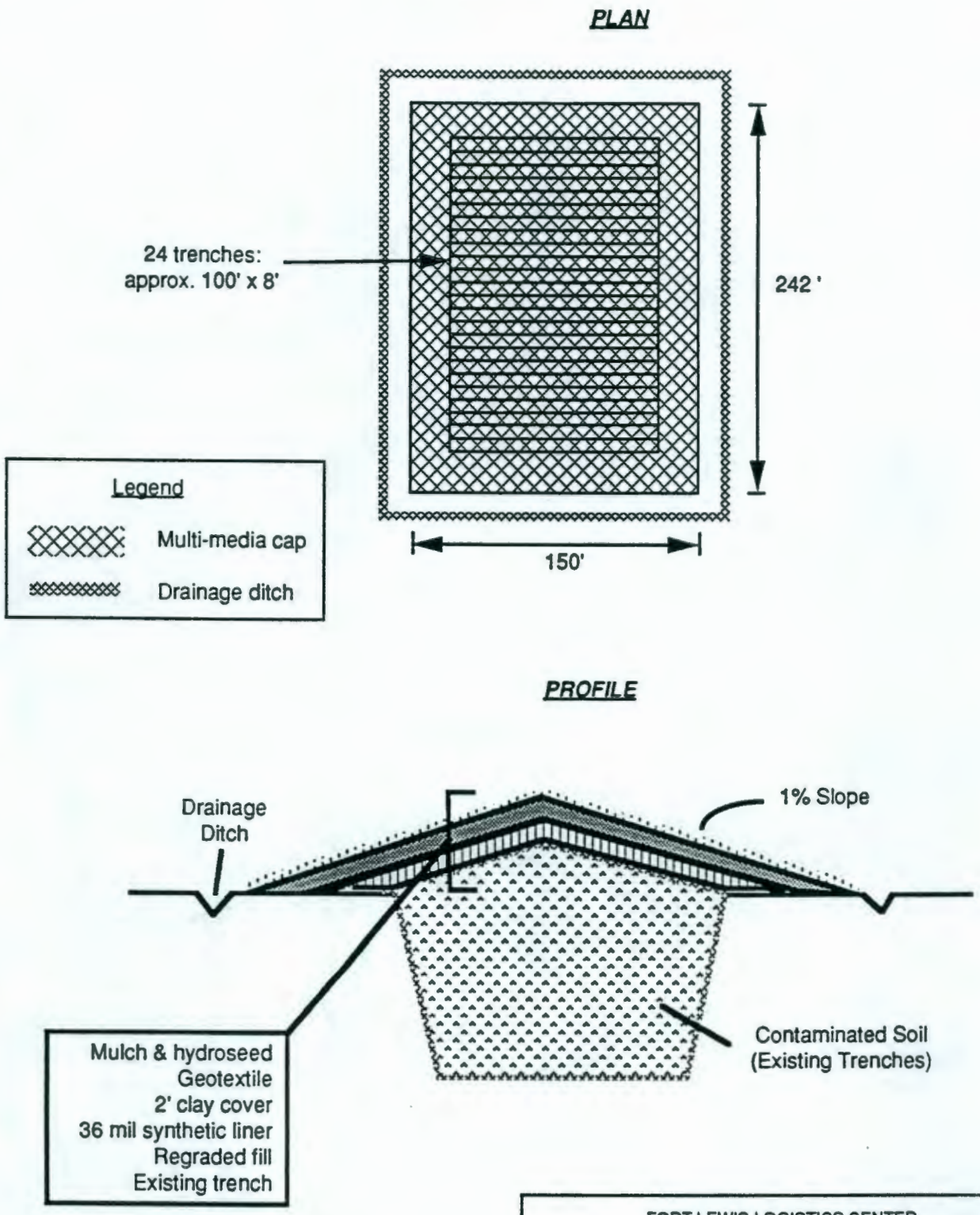

FORT LEWIS LOGISTICS CENTER
REMEDIAL INVESTIGATION / FEASIBILITY STUDY

FIGURE 3-3
CONTAINMENT ALTERNATIVES:
MULTI-MEDIA CAP DIAGRAM

Section No.
Revision No.
Revision Date:
Page of

envirosphere company
In Association with
SHANNON & WILSON

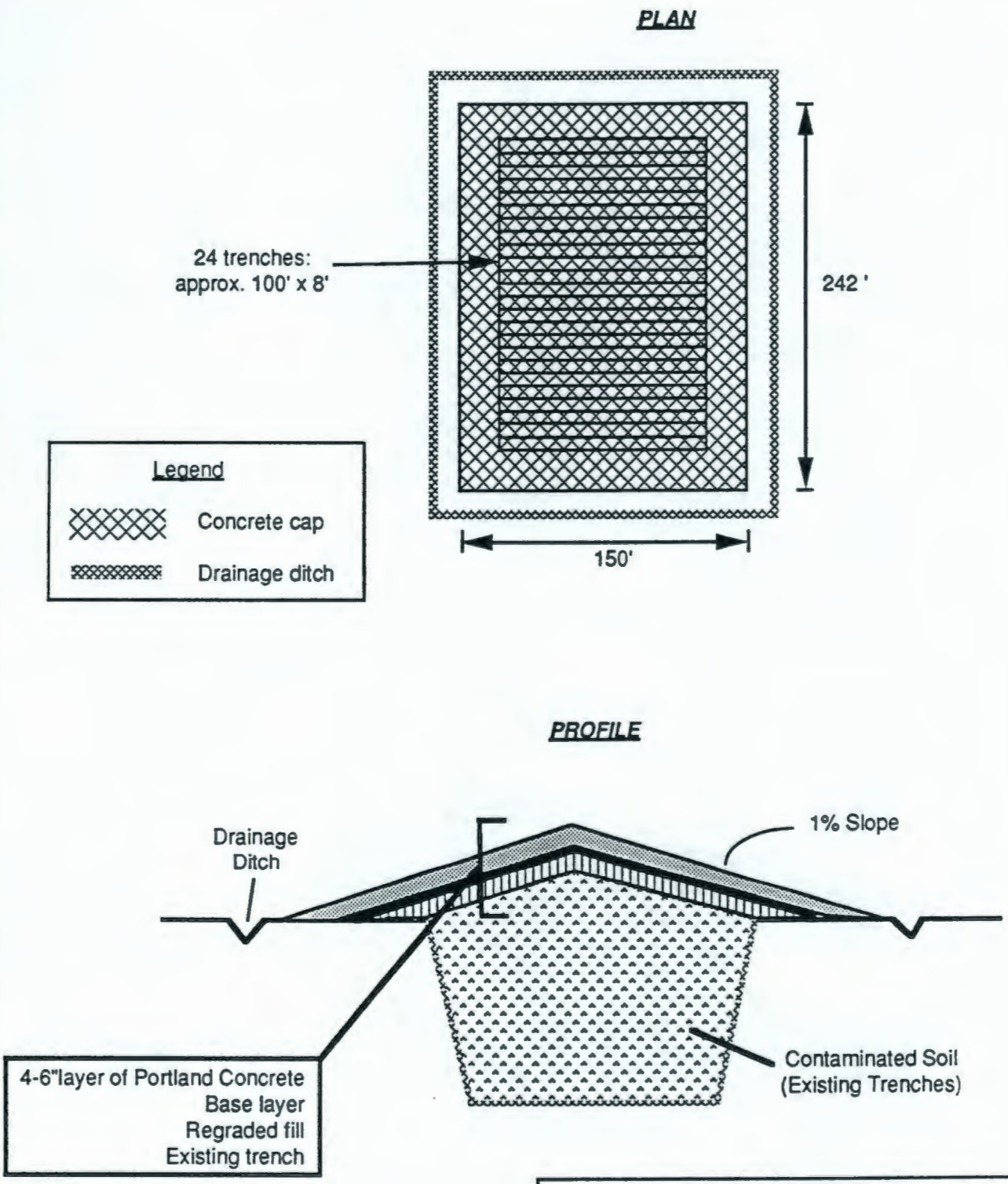

FORT LEWIS LOGISTICS CENTER
REMEDIAL INVESTIGATION / FEASIBILITY STUDY

FIGURE 3-4
CONTAINMENT ALTERNATIVES:
CONCRETE CAP DIAGRAM

Section No.
Revision No.
Revision Date:
Page of

envirosphere company
In Association with
SHANNON & WILSON

TABLE 3-2

EVALUATION OF TREATMENT OPTIONS FOR SOIL SOURCE AREA REMEDIATION:
CONTAINMENT ALTERNATIVES

Criteria	Multi-Media Cap	Concrete Cap
EFFECTIVENESS:		
Short-term protection of human health and environment during construction.	Rating = High. Short-term protection of human health and environment is enhanced by the placement of cap to reduce contaminant mobility, provided that proper construction methods are used and adequate health and safety procedures are followed.	Rating = High. Same as multi-media cap.
Long-Term protection of human health and environment.	Rating = High. Long-term protection of human health and environment is enhanced by the placement of cap which reduces further contaminant transport.	Rating = High. Same as multi-media cap.
Reduction of toxicity, mobility or volume.	Rating = Low. Mobility of contaminants will be reduced; however, toxicity and volume remain unchanged.	Rating = Low. Same as multi-media cap.
IMPLEMENTABILITY:		
Ability to construct, reliably operate, and meet technology-specific regulations for process options until remedial action is complete.	Rating = Medium. Numerous construction materials required under this technology. Currently available technology can meet all applicable regulations and guidelines. Precautions must be observed during regrading operations to preclude excessive volatilization of organics.	Rating = High. Well established and easily implemented technology.
Ability to operate, maintain, replace, and monitor components of the alternative after remedial action is complete.	Rating = Medium. Future condition of the cap cannot easily be assessed. Upon completion of remedial action, groundwater monitoring can be performed to confirm reduction of contaminant mobility. No special operation and maintenance is required.	Rating = High. No special operation and maintenance is required, and the condition of the concrete cap can be readily determined on inspection. Upon completion of remedial action, groundwater monitoring can be performed to confirm reduction of contaminant mobility.
Ability to obtain approvals from other offices and agencies.	Rating = Medium. Approvals may be difficult to obtain since contaminated soil remains in place.	Rating = Medium. Same as multi-media cap.
Availability of RCRA treatment, storage, and disposal services and capacity.	Rating = NA. Not applicable (NA).	Rating = NA. Not applicable (NA).

7676K

TABLE 3-2 (Continued)

EVALUATION OF TREATMENT OPTIONS FOR SOIL SOURCE AREA REMEDIATION:
CONTAINMENT ALTERNATIVES

Criteria	Multi-Media Cap	Concrete Cap
Requirements for and availability of specific equipment and technical specialists.	Rating = Medium. Special construction materials and construction contractors would be required. Appropriate technical specialists are available.	Rating = High. Only typical construction contractors would be required.
ROM COSTS (+50%, -30%):		
Capital	$56,000	$76,000
O&M (Yearly)	$8,000	$7,400
Present Worth (n=30, i=10)	$131,000	$146,000

7676K

3.3.4 Excavation and Disposal of Soils

Two different options are being considered for excavating and disposing of contaminated soils in a RCRA landfill. The two options differ in that one will utilize a RCRA landfill to be constructed on-site, while the other one will use an existing off-site RCRA landfill. Both alternatives are described and evaluated in the following sections. Details of the evaluation are presented in Appendix B.

3.3.4.1 Description of On-site Landfill

In this disposal scenario, contaminated soil will be excavated and placed into dump trucks for hauling to a newly constructed on-site RCRA landfill. This landfill will be designed and installed to meet all applicable state and federal requirements. The on-site landfill will also be sized to accommodate the amount of contaminated soil excavated from the existing trenches. The landfill will provide double containment by using a double liner and double leachate collection system (see Figure 3-5).

3.3.4.2 Description of Off-site Landfill

For this disposal alternative, excavated soil would be stockpiled and loaded into 20-ton soil trucks, and then hauled to an off-site RCRA landfill. Several off-site RCRA disposal facilities currently exist and could be used for the Fort Lewis contaminated soils. A generic process flow diagram is provided in Figure 3-6.

3.3.4.3 Evaluation of Excavation and Disposal Alternatives

The on-site and off-site landfill disposal alternatives were evaluated against effectiveness, implementability, and cost criteria. For a summary of the evaluation, see Table 3-3.

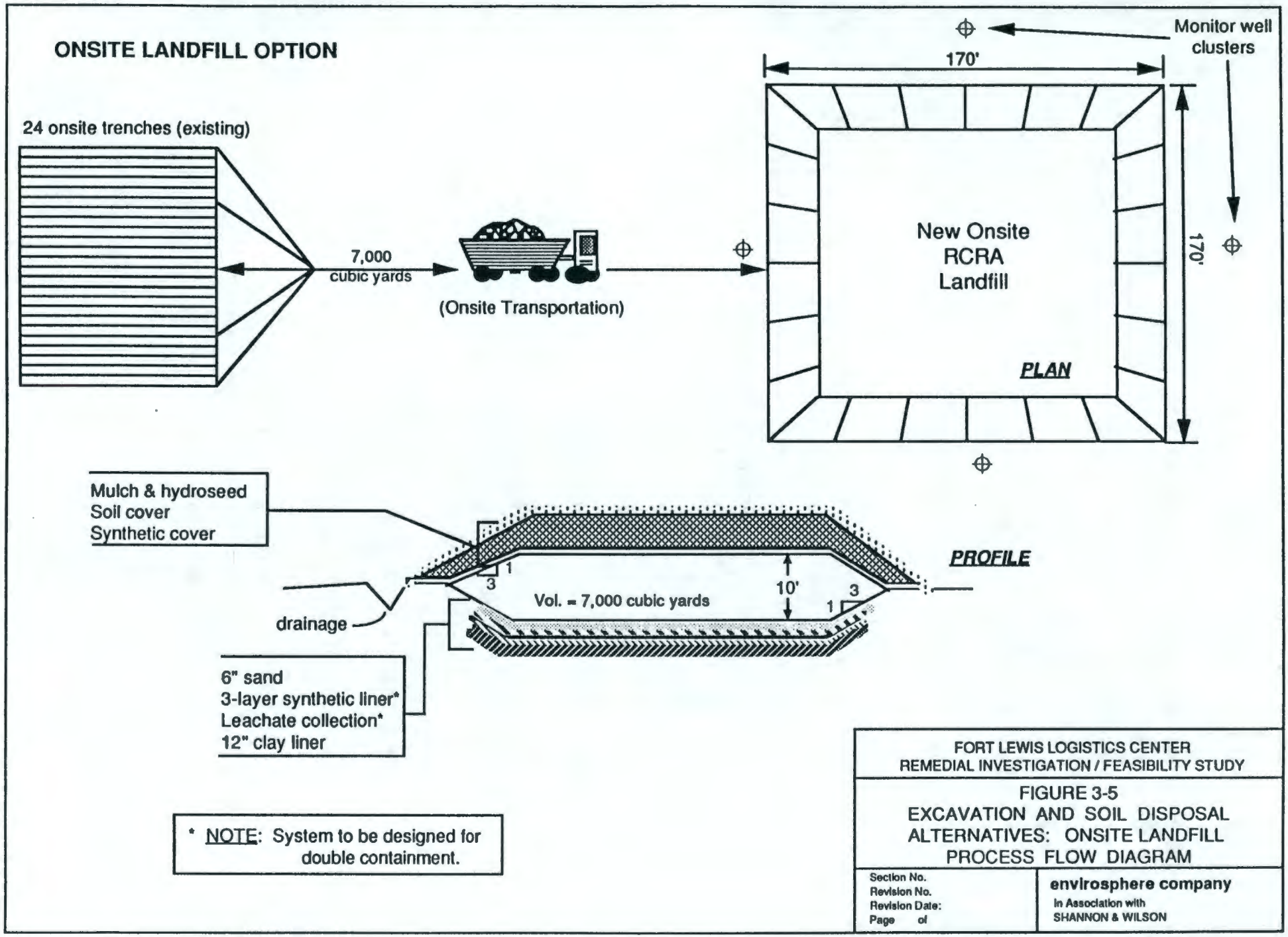
ONSITE LANDFILL OPTION
24 onsite trenches (existing)
7,000
cubic yards
(Onsite Transportation)
Monitor well
clusters
170'
170'
New Onsite
RCRA
Landfill
PLAN
Mulch & hydroseed
Soil cover
Synthetic cover
PROFILE
1
3
10'
3
1
Vol. = 7,000 cubic yards
drainage
6" sand
3-layer synthetic liner*
Leachate collection*
12" clay liner
* NOTE: System to be designed for double containment.
FORT LEWIS LOGISTICS CENTER
REMEDIAL INVESTIGATION / FEASIBILITY STUDY
FIGURE 3-5
EXCAVATION AND SOIL DISPOSAL
ALTERNATIVES: ONSITE LANDFILL
PROCESS FLOW DIAGRAM
Section No.
Revision No.
Revision Date:
Page of
envirosphere company
In Association with
SHANNON & WILSON

OFFSITE LANDFILL OPTION

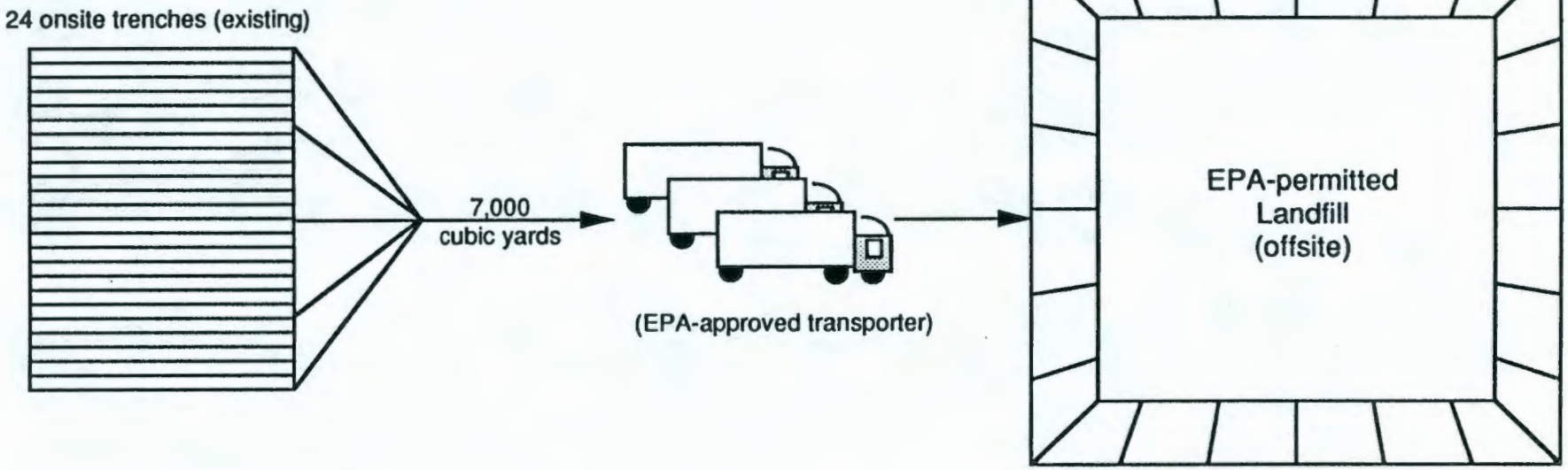

FORT LEWIS LOGISTICS CENTER
REMEDIAL INVESTIGATION / FEASIBILITY STUDY

FIGURE 3-6
EXCAVATION AND SOIL DISPOSAL ALTERNATIVES:
OFFSITE LANDFILL PROCESS FLOW DIAGRAM

Section No.
Revision No.
Revision Date:
Page of

envirosphere company
In Association with
SHANNON & WILSON

TABLE 3-3

EVALUATION OF TREATMENT OPTIONS FOR SOIL SOURCE AREA REMEDIATION:
EXCAVATION AND SOIL DISPOSAL ALTERNATIVES

Criteria	Onsite Disposal	Offsite Disposal
EFFECTIVENESS:		
Short-term protection of human health and environment during construction.	Rating = High. Precautions must be observed to preclude excessive volatilization of organics during excavation, transport, and disposal on-site to ensure worker safety and protection of environment.	Rating = Medium. Precautions must be observed to preclude spillage and worker exposure during removal, transport, and disposal activities. Some volatilization of organics in soil will occur during handling. Additional transportation risks involved with this technology.
Long-Term protection of human health and environment.	Rating = Medium. Long-term protection of human health and environment is provided by the removal of soil contamination. Further surveillance must be provided at the new onsite landfill.	Rating = Medium. Long-term protection of human health and environment is provided by the removal of soil contamination. Further surveillance is required at the offsite disposal facility.
Reduction of toxicity, mobility or volume.	Rating = Low. No reduction of toxicity or volume will be achieved. Mobility will be reduced at the original site of contamination.	Rating = Low. No reduction of toxicity or volume will be achieved. Mobility will be reduced at the original site of contamination.
IMPLEMENTABILITY:		
Ability to construct, reliably operate, and meet technology-specific regulations for process options until remedial action is complete.	Rating = Low. Construction and operation must follow stringent RCRA guidelines for landfill design. Currently available technology can meet all applicable regulations for land-based disposal facilities.	Rating = High. No difficulties are expected. Transportation and disposal services shall be selected based on EPA approval. Current technology for waste removal and handling can meet applicable regulations.
Ability to operate, maintain, replace, and monitor components of the alternative after remedial action is complete.	Rating = Low. Upon completion of appropriate remedial actions, monitoring must be performed at the original landfill. Monitoring will also be required at the new onsite landfill.	Rating = Medium. Organic concentrations in soil can be easily monitored at the licensed disposal facility upon completion of remedial actions.
Ability to obtain approvals from other offices and agencies.	Rating = Low. Approval process may be difficult and time consuming for the installation of a new landfill onsite. Full implementation must be completed by November 1990, according to 40 CFR 268.	Rating = Medium. Exhumed soil must be transported by EPA-approved shipper to a permitted hazardous waste landfill.
Availability of RCRA treatment, storage, and disposal services and capacity.	Rating = Low. A land-based disposal facility must be constructed by November 1990.	Rating = High. Transportation and disposal services are available for the appropriate volume of contaminated soil. Work must be completed by November 1990.

7676K

TABLE 3-3 (Continued)

EVALUATION OF TREATMENT OPTIONS FOR SOIL SOURCE AREA REMEDIATION:
EXCAVATION AND SOIL DISPOSAL ALTERNATIVES

Criteria	Onsite Disposal	Offsite Disposal
Requirements for and availability of specific equipment and technical specialists.	Rating = Medium. Landfill construction specialists would be required. Non-typical construction materials and equipment is required. Appropriate technical specialists are available.	Rating = High. Only EPA-permitted transporters and land-based disposal facilities can be used. These requirements can be met by numerous vendors.
ROM COSTS (+50%, -30%):		
Capital	$820,000	$1,625,000
O&M (Yearly)	$45,000	$0
Present Worth (n=30, i=10)	$1,247,000	$1,625,000

7676K

The off-site landfill was selected as the excavation and disposal option (S4) for detailed analysis because of its ease of implementation, and acceptable effectiveness ratings. Due to transportation risks, the on-site landfill excavation and disposal option provides slightly better short-term protection of human health and environment; however, the problems inherent in constructing an on-site landfill in a timely manner may preclude the implementation of this option.

3.3.5 Excavation and Treatment of Soils

Three different alternatives are being considered for excavating and above ground treatment of soils to reduce organic contamination. These alternatives all involve excavating the contaminated soil, treating the soil by removing or stabilizing the organics, and then returning the treated soil to the existing trenches. The differences in these alternatives involve the treatment methods: soil washing, soil aeration, and soil stabilization. These alternatives are described and evaluated in the following sections. Details of the evaluation are presented in Appendix B.

3.3.5.1 Description of Soil Washing

Contaminated soil will be excavated and then oversize non-soil materials and debris will be removed. Contaminated soil will then be fed into a washing unit where washing fluid (water/surfactants) is passed countercurrent to the soil flow to induce fluid-soil contact, thereby removing the contaminants. The treated soil will then be dewatered and placed back into the existing trenches. A soil washing process flow diagram is presented in Figure 3-7.

3.3.5.2 Description of Soil Aeration

Following excavation and miscellaneous solids handling activities, contaminated soil will be fed into a mobile thermal desorption system where the solids are slightly heated to drive off water and organic

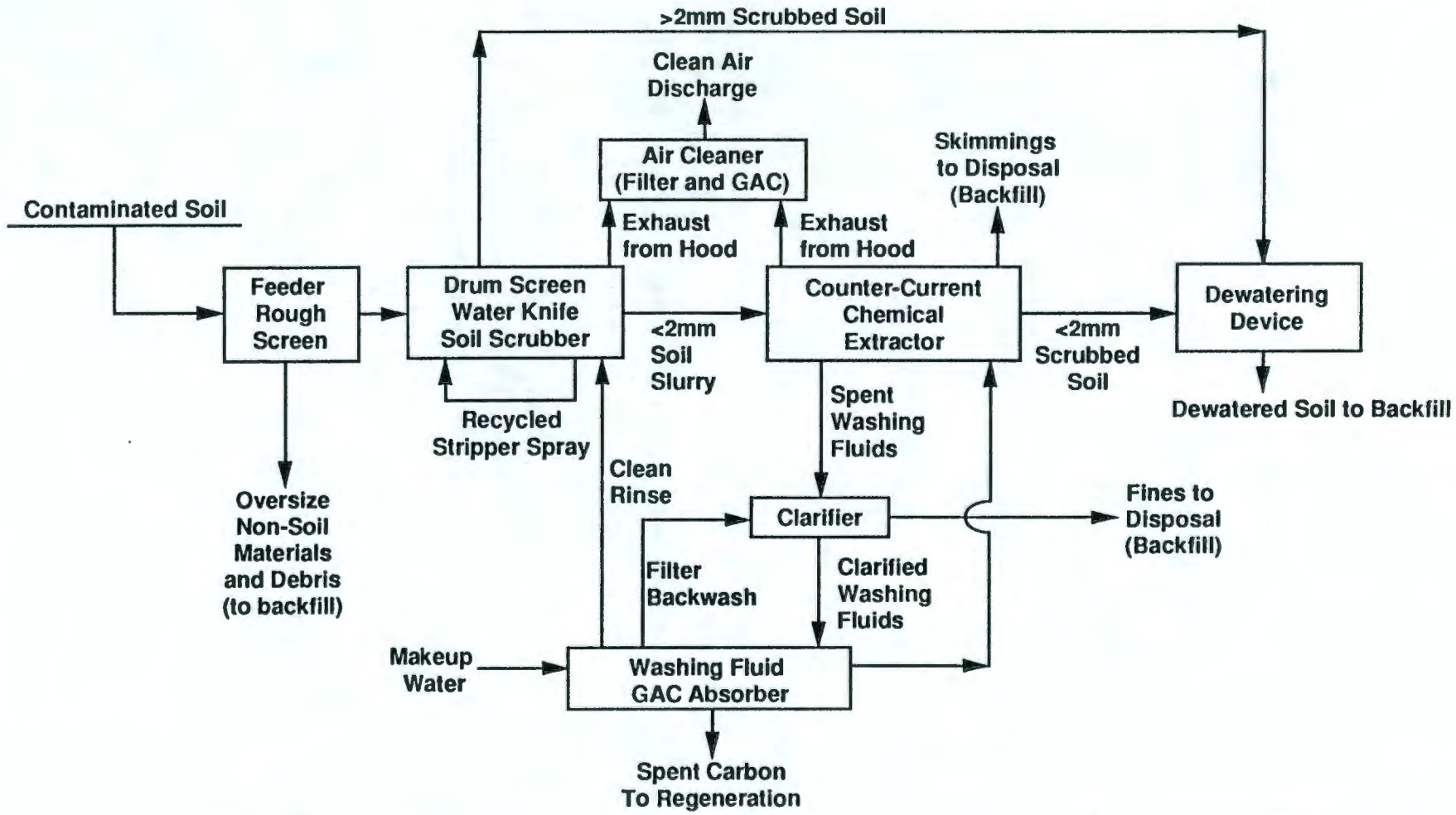

Adapted from: EPA 1988b

FORT LEWIS LOGISTICS CENTER
REMEDIAL INVESTIGATION / FEASIBILITY STUDY

FIGURE 3-7
EXCAVATION & TREATMENT ALTERNATIVES: SOIL WASHING PROCESS FLOW DIAGRAM

Section No:
Revision No:
Revision Date:
Page of

envirosphere company
In Association with SHANNON & WILSON

contaminants (see Figure 3-8). Processed soil is then returned to the existing trenches. Air containing stripped VOCs is treated by an activated carbon system and then discharged to the atmosphere.

3.3.5.3 Description of Soil Stabilization

The above ground soil stabilization and backfill alternative consists of excavating the contaminated soil from the existing trenches and placing it into a waste holding area. The soil is then fed into a mobile mixing plant for stabilization. The soil is mechanically mixed with solidification/stabilization reagents, and then redeposited in the existing trenches (see Figure 3-9).

3.3.5.4 Evaluation of Excavation and Treatment Options

The three soil treatment systems were evaluated against effectiveness, implementability, and cost criteria. For a summary of the evaluation, see Table 3-4. Details of the evaluation are presented in Appendix B.

Soil aeration is selected as the excavation and treatment option to be carried forward for detailed analysis (S5). All three options (i.e., soil washing, soil aeration, and soil stabilization) provide similar effectiveness in the short- and long-term protection of human health and environment. Soil stabilization may not provide reduction of waste toxicity. The soil aeration option is more easily implemented than either soil washing or soil stabilization, since these two options require additional treatment processes and equipment. Finally, soil stabilization is the least expensive of the three options; however, it may not meet all the remedial action objectives. The next least expensive option is soil aeration. Soil aeration meets all the effectiveness and implementability criteria.

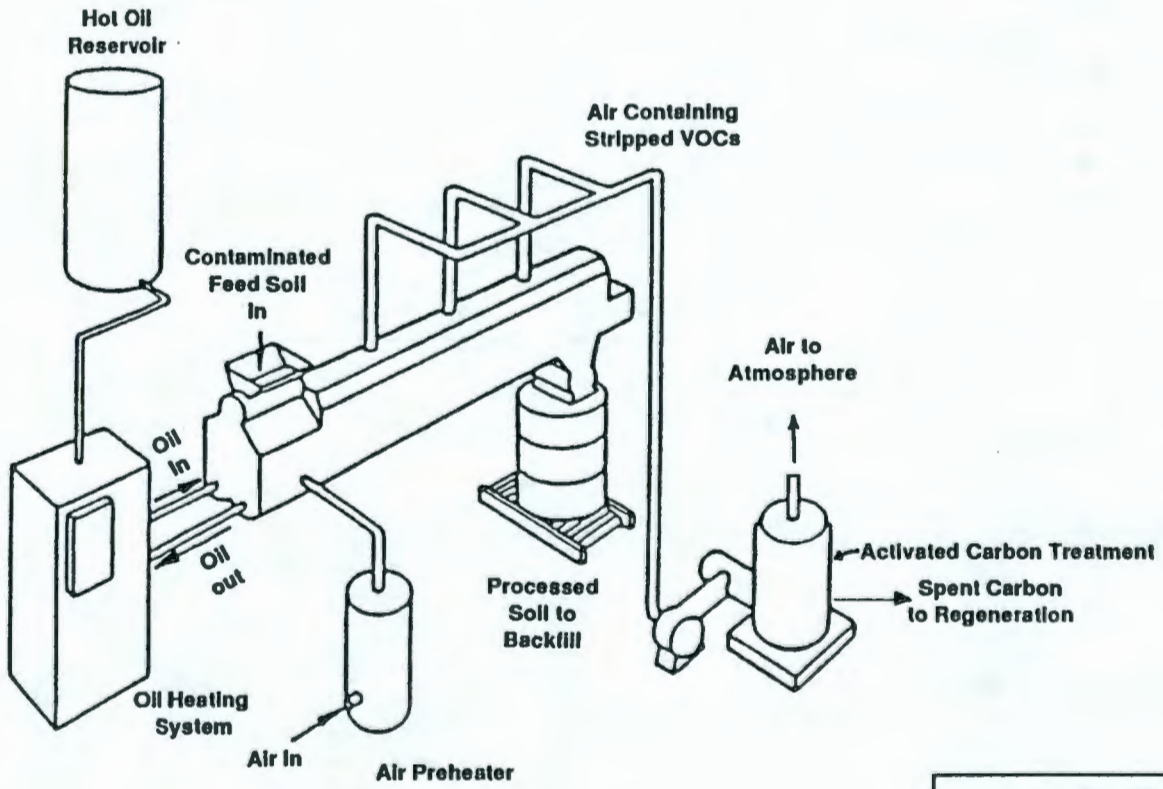

Adapted from: EPA 1988b

FORT LEWIS LOGISTICS CENTER
REMEDIAL INVESTIGATION / FEASIBILITY STUDY

FIGURE 3-8
EXCAVATION & TREATMENT
ALTERNATIVES:
SOIL AERATION SYSTEM

Section No:
Revision No:
Revision Date:
Page of

envirosphere company
In Association with
SHANNON & WILSON

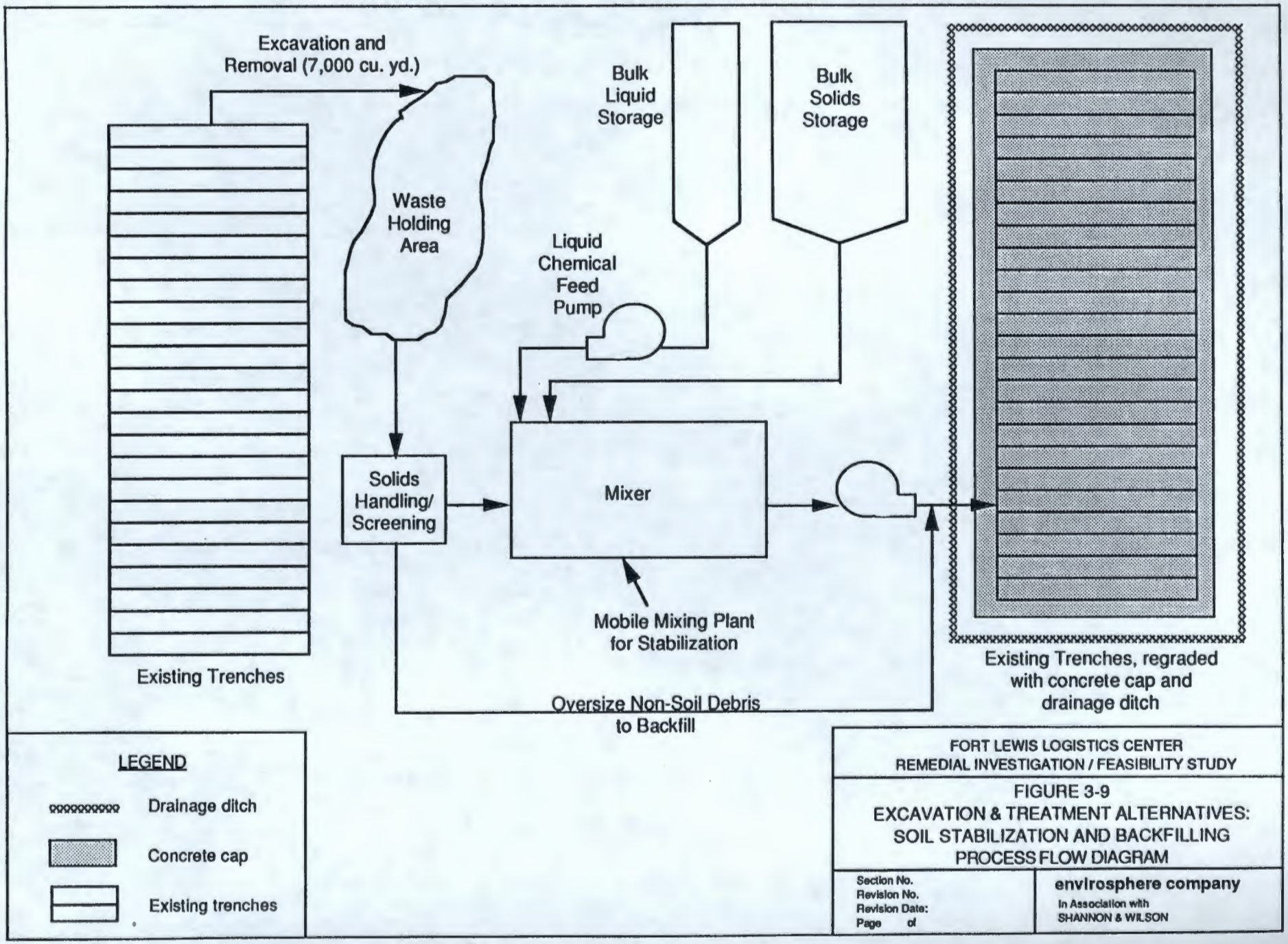

FORT LEWIS LOGISTICS CENTER
REMEDIAL INVESTIGATION / FEASIBILITY STUDY

FIGURE 3-9
EXCAVATION & TREATMENT ALTERNATIVES:
SOIL STABILIZATION AND BACKFILLING
PROCESS FLOW DIAGRAM

Section No.
Revision No.
Revision Date:
Page of

envirosphere company
In Association with
SHANNON & WILSON

TABLE 3-4

EVALUATION OF TREATMENT OPTIONS FOR SOIL SOURCE AREA REMEDIATION:
ABOVE-GROUND SOIL TREATMENT ALTERNATIVES

Criteria	Soil Washing	Soil Aeration	Soil Stabilization and Backfill
EFFECTIVENESS:			
Short-term protection of human health and environment.	Rating=Medium. Short-term protection of human health and environment is ensured through proper operation of this treatment alternative. However, worker exposures would exist during the excavation operations.	Rating=Medium. Same as "soil washing."	Rating=Medium. Same as "soil washing."
Long-Term protection of human health and environment.	Rating=High. Cleanup of contaminated soil provides long-term protection of human health and environment. Proper disposal of treated wastewater is mandatory.	Rating=High. Treatment of contaminated soil ensures the long-term protection of human health and environment.	Rating=High. Stabilization of contaminated soil provides long-term protection of human health and environment.
Reduction of toxicity, mobility or volume.	Rating=High. Organic contaminants are removed from soil and treated, thereby reducing mobility and toxicity.	Rating=High. Mobility and toxicity is reduced by treatment of soil.	Rating=Medium. Mobility is reduced; however, toxicity and volume remain unchanged.
IMPLEMENTABILITY:			
Ability to construct, reliably operate, and meet technology-specific regulations for process options until remedial action is complete.	Rating=Medium. This alternative requires many separate operations. All systems are mobile and are set up at the site. Reliable operation can be provided to meet all technology-specific regulations. Effluent from mobile soil washing systems may require further treatment before final discharge.	Rating=High. All systems are mobile and readily set up on site. A high degree of contaminant removal can be achieved through reliable operation.	Rating=Medium. This alternative is more complex than the "soil aeration" alternative. All systems are mobile and set up on site. Technology has been proven at numerous sites.
Ability to operate, maintain, replace, and monitor components of the alternative after remedial action is complete.	Rating=High. Organic concentrations are removed during remediation, and therefore, no long-term monitoring is required.	Rating=High. Organic concentrations are removed during remediation, and therefore, no long-term monitoring is required.	Rating=Medium. Organic concentrations must still be monitored upon completion of remedial action.
Ability to obtain approvals from other offices and agencies.	Rating=High. No problems are expected.	Rating=High. Same as "soil washing."	Rating=Medium. Agency approvals may be difficult since contaminated soil is only stabilized and not removed.
Availability of RCRA treatment, storage, and disposal services and capacity.	Rating=High. Treatment services are provided by vendor. Disposal of wastewater may be done through discharge on site.	Rating=High. Treatment, storage, and disposal services for collected organics and spent carbon is typically provided by activated carbon vendor.	Rating=High. No TSD facilities are required.

7676K

TABLE 3-4 (Continued)

EVALUATION OF TREATMENT OPTIONS FOR SOIL SOURCE AREA REMEDIATION:
ABOVE-GROUND SOIL TREATMENT ALTERNATIVES

Criteria	Soil Washing	Soil Aeration	Soil Stabilization and Backfill
Requirements for and availability of specific equipment and technical specialists.	Rating=Medium. Mobile systems are currently available, along with technical specialists.	Rating=Medium. Mobile systems and appropriate technical specialists are currently available.	Rating=Medium. This technology is readily available through numerous vendors; however, stabilization of organics requires verification.
ROM COSTS (+50%, -30%):			
Capital	$1,428,000	$1,050,000	$649,000
O&M (Yearly)	$0	$0	$7,000
Present Worth (n=30, i=10)	$1,428,000	$1,050,000	$711,000

7676K

3.3.6 In Situ Treatment of Soils

Three different alternatives are being considered for in situ treatment of soils for organic contamination. These in situ alternatives, soil aeration, soil agitation, and soil stabilization, are described and evaluated in the following sections. Details of the evaluation are presented in Appendix B.

3.3.6.1 Description of In Situ Soil Aeration

In situ soil aeration involves the stripping of organics from subsurface soils by injecting and extracting air through the soil. The air is then treated by carbon adsorption. Using a depth of 10 feet and vent pipe spacing of 20 feet, 150 cfm air flow is introduced into the existing trenches and withdrawn under vacuum. The extracted air containing the organics is then pumped to a vapor carbon package treatment unit prior to discharge to the atmosphere (see Figure 3-10).

3.3.6.2 Description of In Situ Soil Agitation

In situ soil agitation involves the use of an auger-type drilling system which is under negative air pressure. As the auger bores into the contaminated soil, organic vapors are released and captured under vacuum. Captured vapors then flow to a mobile carbon adsorption treatment system for removal of organics from the air prior to discharge to the atmosphere (see Figure 3-11).

3.3.6.3 Description of In Situ Soil Stabilization

In situ soil stabilization is very similar to the soil agitation technique with one exception, the addition of fixating agents during the augering operations for stabilization purposes. A fixating agent such as cement is used to stabilize soils during augering, while any organic vapors are captured and sent to a carbon adsorption air

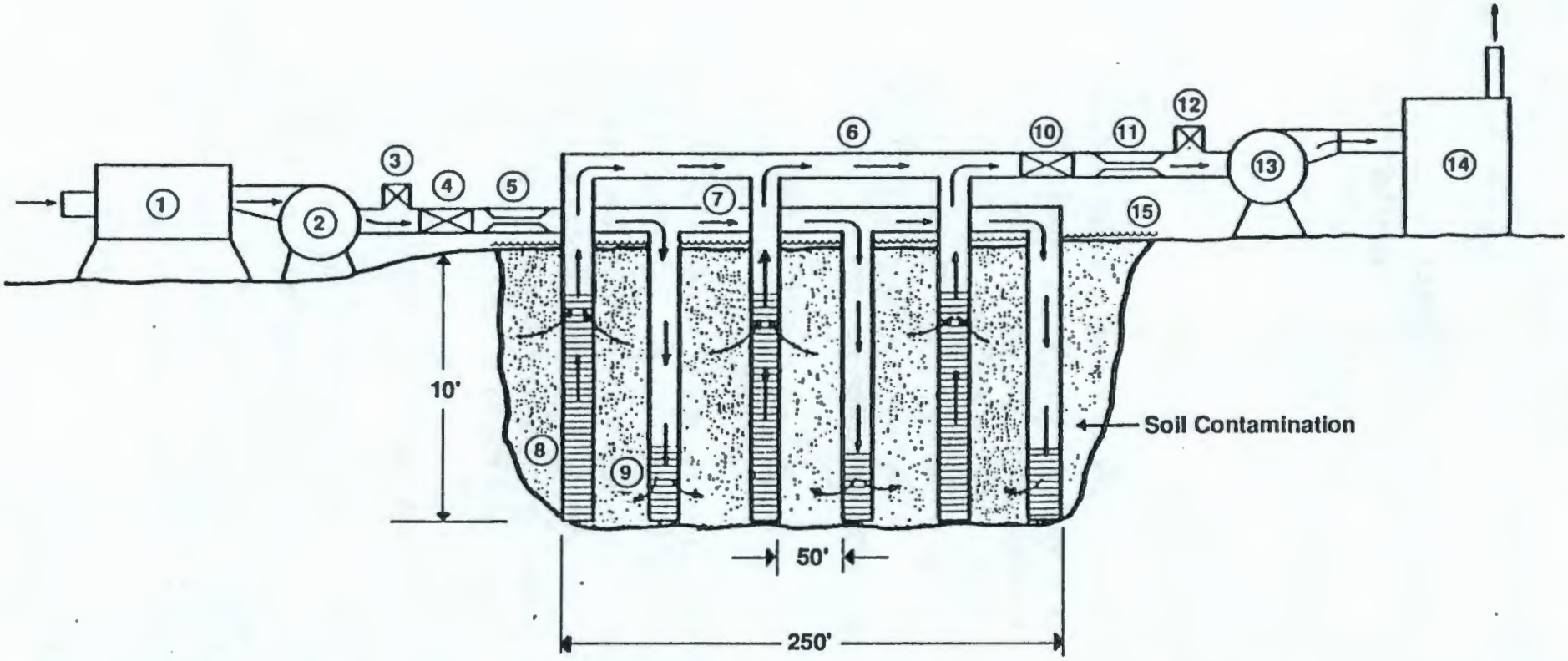

NOT TO SCALE

1 Electric Air Flow Heater
2 Forced Draft Injection Fan
3 Injection Air Bypass Valve
4 Injection Air Sampling Port
5 Injection Air Flow Meter
6 Extraction Manifold
7 Injection Manifold
8 Slotted Vertical Extraction Vent Pipe (typ)
9 Slotted Vertical Injection Vent Pipe (typ)
10 Extraction Air Sampling Port
11 Extraction Air Flow Meter
12 Extraction Air Bypass Valve
13 Induced Draft Extraction Fan
14 Vapor Carbon Package Treatment Unit
15 30-mil PVC Cover

ADAPTED FROM: WESTON 1985.

FORT LEWIS LOGISTICS CENTER
REMEDIAL INVESTIGATION / FEASIBILITY STUDY

FIGURE 3-10
IN-SITU SOIL TREATMENT
ALTERNATIVES: IN-SITU SOIL
AERATION PROCESS FLOW DIAGRAM

Section No:
Revision No:
Revision Date:
Page of

envirosphere company
In Association with
SHANNON & WILSON

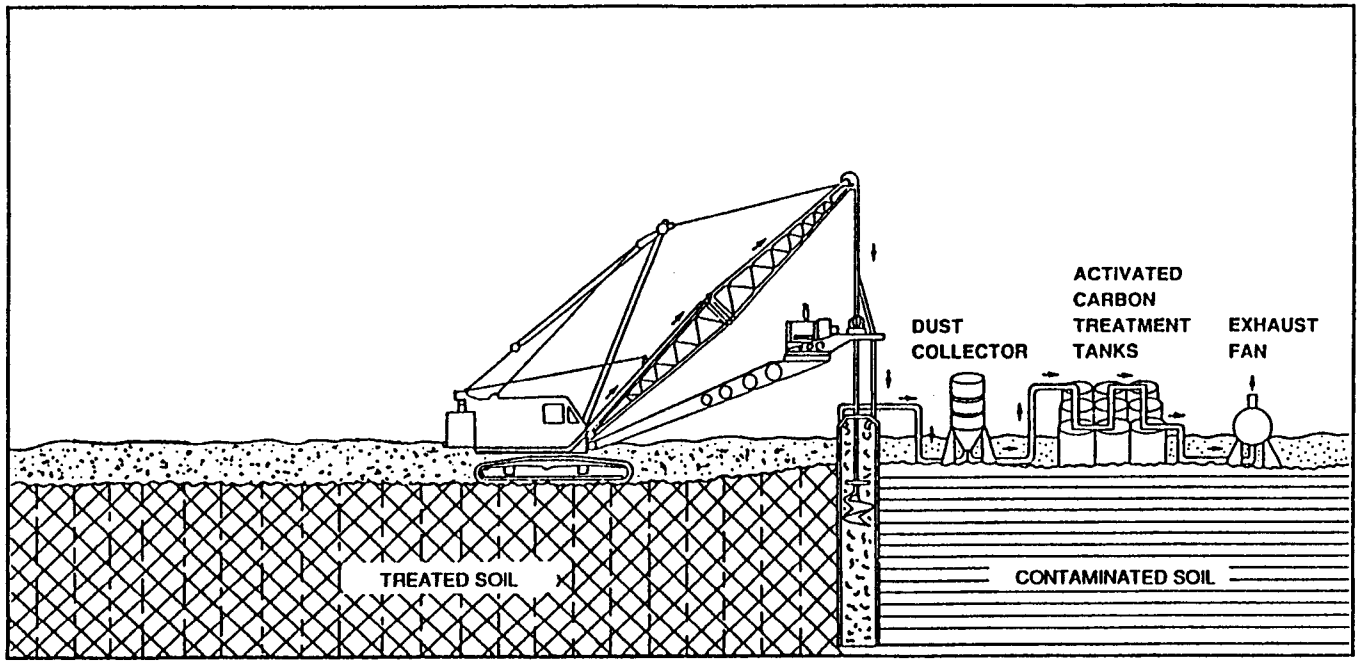

Crane mounted mixing system advancing through sludge layer.

ADAPTED FROM: GEO-CON, INC. 1988

FORT LEWIS LOGISTICS CENTER
REMEDIAL INVESTIGATION / FEASIBILITY STUDY

FIGURE 3-11
IN-SITU SOIL TREATMENT
ALTERNATIVES: IN-SITU AGITATION
PROCESS FLOW DIAGRAM

Section No:
Revision No:
Revision Date:
Page of

envirosphere company
In Association with
SHANNON & WILSON

treatment system prior to final discharge to the atmosphere (see Figure 3-12).

3.3.6.4 Evaluation of In Situ Treatment Options

The three *in situ* alternatives were evaluated against effectiveness, implementability, and cost criteria. For a summary of the evaluation, see Table 3-5. Details of the evaluation are presented in Appendix B.

Soil aeration is chosen as the *in situ* soil treatment option for detailed analysis (S6). *In situ* soil stabilization is the most effective in protecting human health and achieving a reduction of waste toxicity, mobility, and volume since this option provides for the removal and/or fixation of organics. *In situ* soil aeration is the most easily implemented of the three options and is also the least expensive.

3.4 SUMMARY OF ALTERNATIVE DEVELOPMENT

In this section, the final candidate alternatives that will undergo detailed analyses are summarized. No action and institutional actions are discussed in Section 3.4.1, and remediation alternatives are discussed in Sections 3.4.2 through 3.4.5.

3.4.1 No Remediation Alternatives

Both the no action (S1) and institutional action (S2) alternatives are retained for further consideration in the detailed analysis. Neither alternative was evaluated against effectiveness, implementability, and cost criteria. The no action alternative was not evaluated against effectiveness, implementability, and cost criteria because this alternative will be carried forward regardless of the outcome of the evaluation. The institutional actions alternative was not evaluated against effectiveness, implementability, and cost criteria because the purpose of this evaluation is to compare similar alternatives and select the best. Since there are no similar alternatives with which to

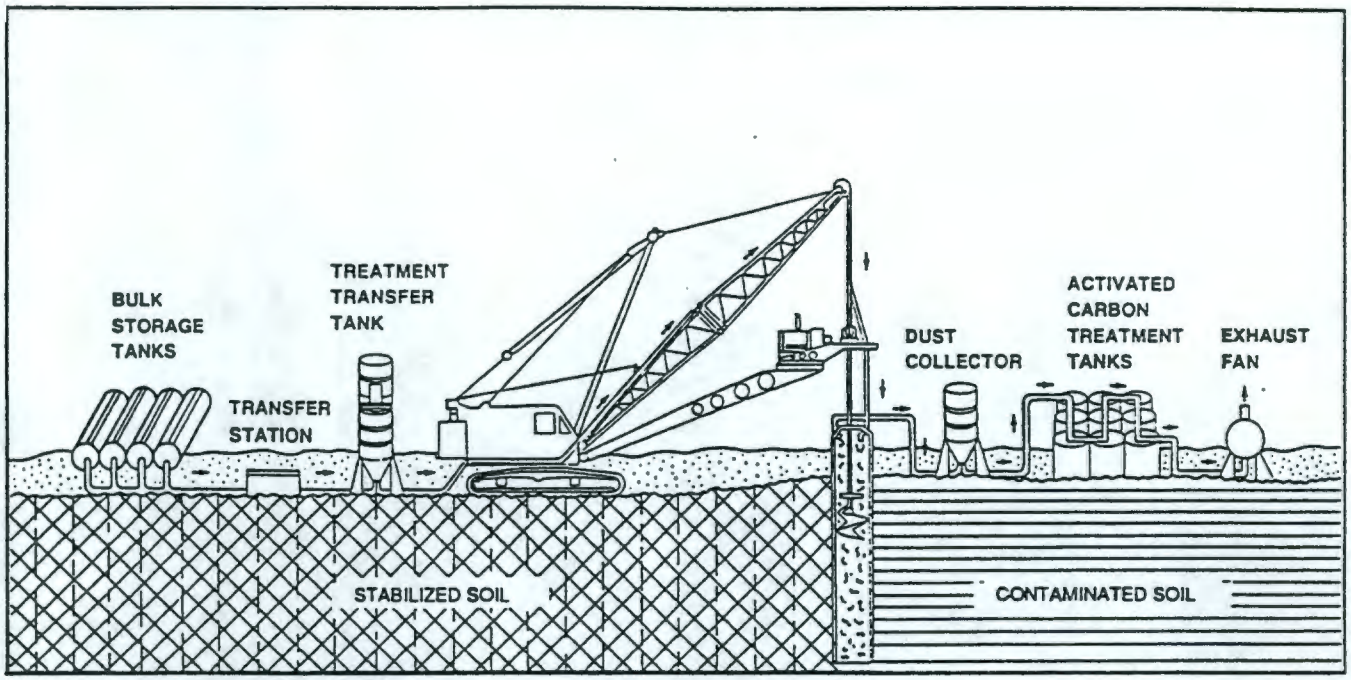

Crane mounted mixing system advancing through sludge layer.

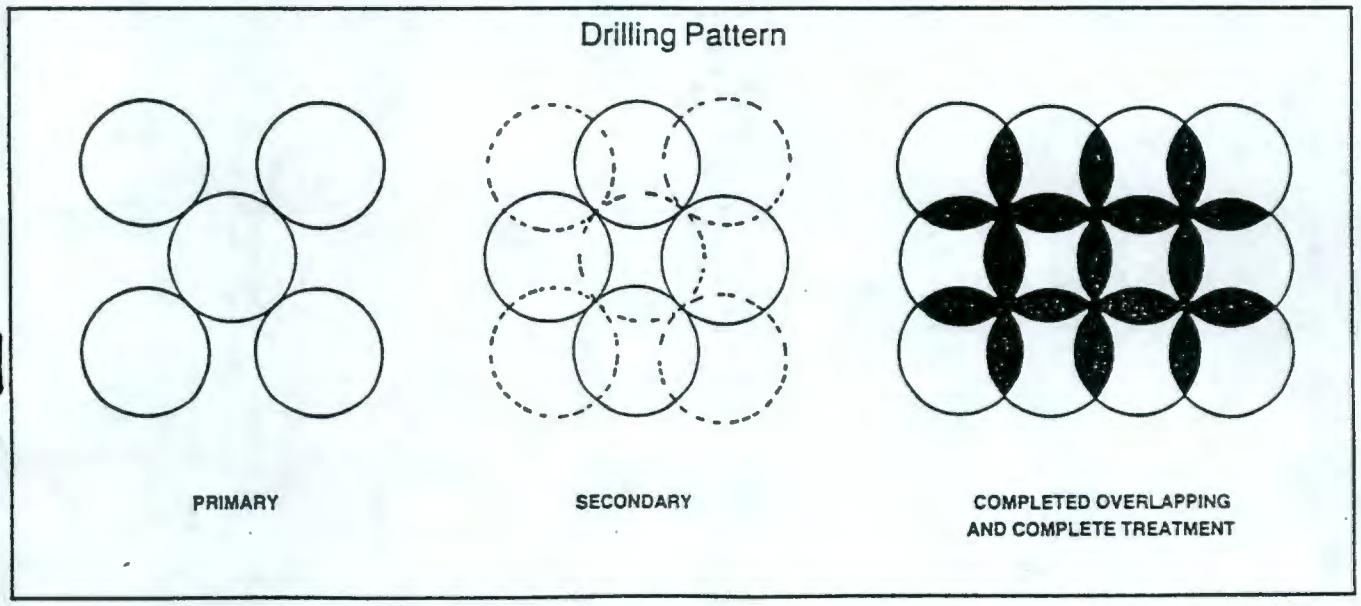

Primary and secondary overlapping bore patterns.

ADAPTED FROM: GEO-CON, INC. 1988

FORT LEWIS LOGISTICS CENTER
REMEDIAL INVESTIGATION / FEASIBILITY STUDY

FIGURE 3 - 12
IN-SITU SOIL TREATMENT
ALTERNATIVES: IN-SITU STABILIZATION
PROCESS FLOW DIAGRAM

Section No:
Revision No:
Revision Date:
Page of

envirosphere company
In Association with
SHANNON & WILSON

TABLE 3-5

EVALUATION OF TREATMENT OPTIONS FOR SOIL SOURCE AREA REMEDIATION:
IN SITU SOIL TREATMENT ALTERNATIVES

Criteria	In Situ Soil Aeration	In Situ Soil Agitation	In Situ Soil Stabilization
EFFECTIVENESS:			
Short-term protection of human health and environment.	Rating=Medium. Short-term protection of human health and environment will be ensured since soil contamination is removed.	Rating=Medium. Short-term protection of human health and environment will be ensured since soil contamination is removed.	Rating=Medium. Short-term protection of human health and environment will be ensured since soil contamination is removed or stabilized.
Long-Term protection of human health and environment.	Rating=High. Long-term protection of human health and environment is achieved due to cleanup of contaminated soil. Confirmation of organics removed may be difficult.	Rating=High. Removal of organic contamination from soil should exhibit long-term protection of human health and environment. Confirmation of organics removed may be difficult.	Rating=High. Long-term protection of human health and environment is achieved due to cleanup of contaminated soil. Organics are either removed or stabilized in situ.
Reduction of toxicity, mobility or volume.	Rating=High. Mobility and toxicity is decreased since organics are removed. Volume is also reduced significantly.	Rating=High. Mobility and toxicity is decreased since organics are removed. Volume is also reduced significantly.	Rating=High. Organics are either removed or stabilized in situ, thereby decreasing mobility. Toxicity and volume are also reduced significantly.
IMPLEMENTABILITY:			
Ability to construct, reliably operate, and meet technology-specific regulations for process options until remedial action is complete.	Rating=High. System is relatively easy to install. Reliable operation depends on efficiency of vacuum system to optimize horizontal pathway development and not vertical. Airborne concentrations can also be monitored to check removal efficiency.	Rating=Medium. Entire system can be mobilized to site and readily moved to various source areas on site. Negative pressure must be maintained during operation in order to capture organic vapors for treatment. This is a relatively new technology, therefore reliable operation has not been demonstrated.	Rating=Low. Entire system can be mobilized to site and then readily moved to various source areas. Added mixing and treatability studies may be required. Problems may be encountered with heterogenous soil characteristics.
Ability to operate, maintain, replace, and monitor components of the alternative after remedial action is complete.	Rating=Not Applicable. (NA)	Rating=NA.	Rating=NA.
Ability to obtain approvals from other offices and agencies.	Rating=High. Due to innovative technology status and expected removal efficiencies, no problems should be encountered during approval process.	Rating=High. Due to innovative technology status and expected removal efficiencies, no problems should be encountered during approval process.	Rating=High. Due to innovative technology status and expected removal efficiencies, no problems should be encountered during approval process.
Availability of RCRA treatment, storage, and disposal services and capacity.	Rating=High. Disposal services for spent activated carbon are typically provided by the activated carbon vendor. No soil is removed.	Rating=High. Disposal services for spent activated carbon are typically provided by the activated carbon vendor. No soil is removed.	Rating=High. Disposal services for spent activated carbon are typically provided by the activated carbon vendor. No soil is removed.

7676K

TABLE 3-5 (Continued)

EVALUATION OF TREATMENT OPTIONS FOR SOIL SOURCE AREA REMEDIATION:
IN SITU SOIL TREATMENT ALTERNATIVES

Criteria	In Situ Soil Aeration	In Situ Soil Agitation	In Situ Soil Stabilization
Requirements for and availability of specific equipment and technical specialists.	Rating=High. Air stripping/carbon adsorption specialist is required. Equipment is readily available.	Rating=Medium. Technical specialists and necessary equipment will be supplied by the vendor.	Rating=Low. Technical specialists and necessary equipment are available from the vendor. This alternative requires more unit operations than either of the other alternatives.
ROM COSTS (+50%, -30%):			
Capital	$244,000	$575,000	$625,000
O&M (Yearly)	$0	$0	$0
Present Worth (n=30, i=10)	$244,000	$575,000	$625,000

compare it, this evaluation could not be performed. This alternative will be carried forward to the detailed analysis where a complete evaluation, using the nine evaluation criteria (see Section 5.1), will be performed.

3.4.2 Containment Options

A summary of the containment options evaluation is included in Table 3-6. Both options are equal in the effectiveness for protecting human health and the environment. By comparison, the concrete cap containment system is more easily implemented and readily maintained than the multi-media cap, with the difference in cost being insignificant. Based on these results, the concrete cap is chosen as the containment option (S3) to be carried forward to detailed analysis because it meets all the remedial action objectives with little cost difference from the other option.

3.4.3 Excavation and Disposal Options

A summary of the excavation and disposal options evaluation is included in Table 3-6. The on-site landfill excavation and disposal option provides slightly better short-term protection of human health and environment than the off-site landfill option, due to the transportation risks inherent with off-site disposal. However, the off-site landfill option would be much easier to fully implement. The potential problems in constructing an on-site landfill in a timely manner almost preclude the implementation of this option. While the cost of the off-site landfill option is higher, its ease of implementation and overall effectiveness allows the off-site landfill to be chosen as the excavation and disposal option that will be carried forward for detailed analysis (S4).

3.4.4 Excavation and Treatment Options

A summary of the excavation and treatment options evaluation is included in Table 3-6. All three options (i.e., soil washing, soil

TABLE 3-6

SUMMARY COMPARISON OF SOIL SOURCE AREA REMEDIATION ALTERNATIVES SELECTED FOR DETAILED EVALUATION

	Containment		In Situ Soil Treatment			Excavation and Disposal		Above-Ground Soil Treatment		
	Multi-Media Cap	Concrete Cap	In Situ Soil Aeration	In Situ Soil Agitation	In Situ Soil Stabili-zation	Onsite Landfill	Offsite Landfill	Soil Washing	Soil Aeration	Soil Stabili-zation and Back-filling
EFFECTIVENESS:										
Short-term protection of human health and environment.	High	High	Medium	Medium	Medium	High	Medium	Medium	Medium	Medium
Long-term protection of human health and environment.	High	High	High	High	High	Medium	Medium	High	High	High
Reduction of toxicity, mobility or volume.	Low	Low	High	High	High	Low	Low	High	High	Medium
IMPLEMENTABILITY:										
Ability to construct, reliably operate, and meet technology-specific regulations for process options until remedial action is complete.	Medium	High	High	Medium	Low	Low	High	Medium	High	Medium
Ability to operate, maintain, replace, and monitor components of the alternative after remedial action is complete.	Medium	High	NA	NA	NA	Low	Medium	High	High	Medium
Ability to obtain approvals from other offices and agencies.	Medium	Medium	High	High	High	Low	Medium	High	High	Medium
Availability of RCRA treatment, storage, and disposal services and capacity.	NA	NA	High	High	High	Low	High	High	High	High

7676K

TABLE 3-6 (Continued)

SUMMARY COMPARISON OF SOIL SOURCE AREA REMEDIATION ALTERNATIVES SELECTED FOR DETAILED EVALUATION

	Containment		In Situ Soil Treatment			Excavation and Disposal		Above-Ground Soil Treatment		
	Multi-Media Cap	Concrete Cap	In Situ Soil Aeration	In Situ Soil Agitation	In Situ Soil Stabili-zation	Onsite Landfill	Offsite Landfill	Soil Washing	Soil Aeration	Soil Stabili-zation and Back-filling
Requirements for and availability of specific equipment and technical specialists.	Medium	High	High	Medium	Low	Medium	High	Medium	Medium	Medium
ROM COSTS (+50%, -30%):										
Capital	$56,000	$76,000	$244,000	$575,000	$625,000	$820,000	$1,625,000	$1,428,000	$1,050,000	$649,000
O&M (Yearly)	$8,000	$7,400	$0	$0	$0	$45,000	$0	$0	$0	$7,000
Present Worth (n=30, i=10)	$131,000	$146,000	$244,000	$575,000	$625,000	$1,247,000	$1,625,000	$1,428,000	$1,050,000	$711,200

7676K

aeration, and soil stabilization) provide similar effectiveness in the short- and long-term protection of human health and environment. Soil stabilization may not provide reduction of waste toxicity. The soil aeration option is more easily implemented than either soil washing orsoil stabilization, since these two options require additional treatment processes and equipment. Finally, soil stabilization is the least expensive of the three options. The next least expensive option is soil aeration, which also meets all the effectiveness and implementability criteria. Thus, soil aeration is selected as the excavation and treatment option to be carried forward for detailed analysis (S5).

3.4.5 In Situ Treatment Options

A summary of the in situ soil treatment options is included in Table 3-6. In situ soil stabilization is the most effective in protecting human health and achieving a reduction of waste toxicity, mobility, and volume since this option provides for the removal and/or fixation of organics. In situ soil aeration is the most easily implemented of the three options and is also the least expensive. Since soil aeration does meet the effectiveness criteria and soil stabilization is not only the most expensive, but also the most difficult to implement, soil aeration is chosen as the in situ soil treatment option for detailed analysis (S6).

3.5 SUMMARY OF FINAL CANDIDATE ALTERNATIVES FOR SOURCE AREA REMEDIATION

Remediation options were evaluated against effectiveness, implementability, and cost criteria in this section. The final candidate alternatives for each of the containment, excavation and disposal, excavation and treatment, and in situ treatment options are summarized in Table 3-7. These alternatives will undergo detailed analysis in Section 5.0.

TABLE 3-7

FINAL CANDIDATE ALTERNATIVES
FOR SOIL SOURCE AREA REMEDIATION

Alternative Number	Description of Alternative
S1	No Action Monitoring Wells
S2	Institutional Actions Deed Restrictions Administrative Controls Monitoring Wells Physical Controls (e.g., Fence)
S3	Containment Concrete Cap Administrative Controls Monitoring Wells
S4	Excavation and Disposal Off-site Landfill
S5	Excavation and Treatment Above-Ground Soil Aeration and Backfill Administrative Controls Monitoring Wells
S6	*In Situ* Treatment Soil Aeration Administrative Controls Monitoring Wells

4.0 DEVELOPMENT OF ALTERNATIVES FOR GROUNDWATER

Groundwater alternatives are developed in this section. Alternative development consists of a process option evaluation and screening followed by a step in which the remaining process options are combined into alternatives which treat groundwater. The alternatives developed in this section will be evaluated in detail in Section 6.0.

4.1 ALTERNATIVE DEVELOPMENT METHODOLOGY

An overview of the methodology used for developing both soil and groundwater alternatives is presented in Section 3.1 and is not repeated here. Specifics on the development of groundwater alternatives are presented in this section.

As already noted in Section 3.1, EPA requires that a full range of alternatives be developed during a Feasibility Study. This full range of alternatives must include alternatives that achieve different cleanup levels and alternatives that achieve the desired cleanup level in different times. "No remediation" alternatives and alternatives that require cleanup to the action levels presented in Section 1.0 are considered. In addition, two different times to achieve cleanup are considered. By increasing the flowrate of the groundwater that is pumped, the time to achieve the action levels is reduced. Thus, to achieve cleanup in two different times, two different extraction schemes are considered.

The "no remediation" alternatives only include the "No Action" option. See Figure 4-1 for an overview of the development of this alternative. The only action that would be implemented with the "No Action" alternative is a monitoring program. As described in Section A.2.2 of Appendix A, institutional controls alone are not protective of human health. Therefore, no "institutional actions" alternative is considered viable. However, institutional controls, such as deed restrictions and administrative controls, will be used in combination with the pump and treat options.

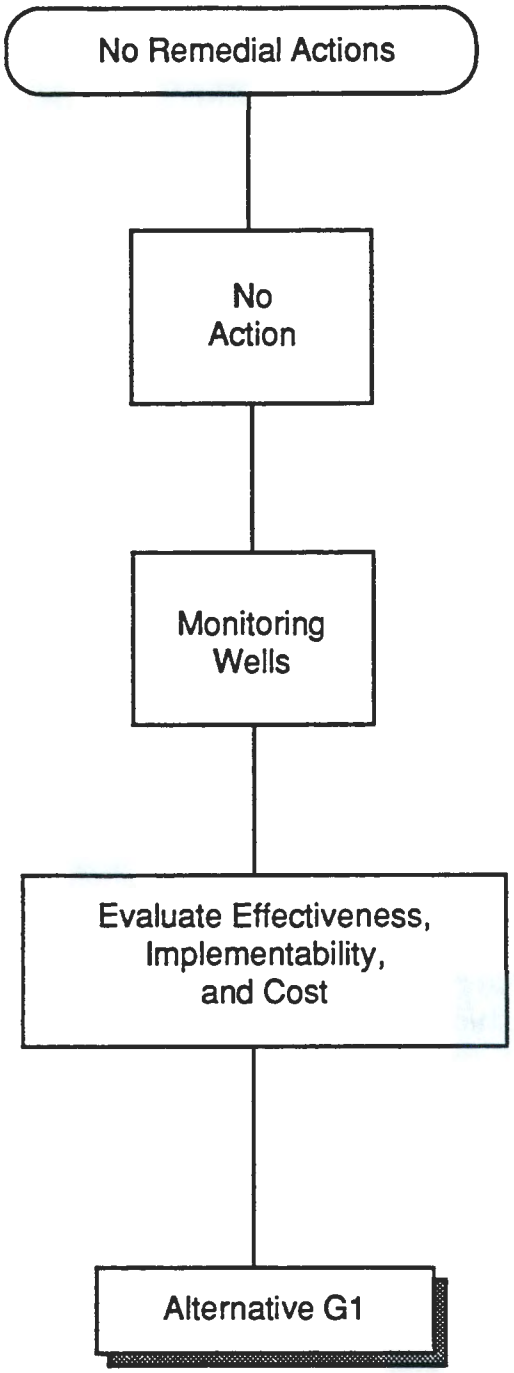

FORT LEWIS LOGISTICS CENTER
REMEDIAL INVESTIGATION / FEASIBILITY STUDY

FIGURE 4-1
DEVELOPMENT OF
GROUNDWATER ALTERNATIVE G1

Section No.
Revision No.
Revision Date:
Page of

envirosphere company
In Association with
SHANNON & WILSON

See Figures 4-2 and 4-3 for the development of the alternatives which remediate to the action levels. For cleanup to the action levels, two different extraction schemes are considered. The method used for developing an alternative for each of these extraction schemes is identical. First, the treatment and disposal options are described in more detail knowing the flowrates and concentrations for the particular extraction scheme. The recharge disposal option can affect the rate of groundwater extraction depending on the location of the extraction wells and the recharge point. For the Fort Lewis Logistics Center, the greatest increase in flow from the extraction wells as a result of recharge is expected to be about 20 percent. This would not result in a significant difference in the size of treatment equipment. As a result, the evaluation of treatment and disposal options can be performed separately. The best treatment alternative is then selected for each extraction scheme and combined with deed restrictions, administrative controls, monitoring wells, and finally the disposal option found to be the best for the extraction scheme being considered. Process options, such as monitoring wells and flow equalization, which would be identical for all alternatives are not considered during alternative development, thus simplifying the analysis.

4.2 EXTRACTION SCHEMES

Two different schemes are being considered for extraction of contaminated groundwater. The time required to clean the groundwater is different for the two schemes. In the first extraction scheme, groundwater is extracted from a line of wells parallel to I-5 on the Fort Lewis Logistics Center property. In the second scheme, wells are strategically located near the source areas in order to pump the more highly contaminated groundwater on the site. In addition, a line of wells parallel to I-5 is used in this extraction scheme.

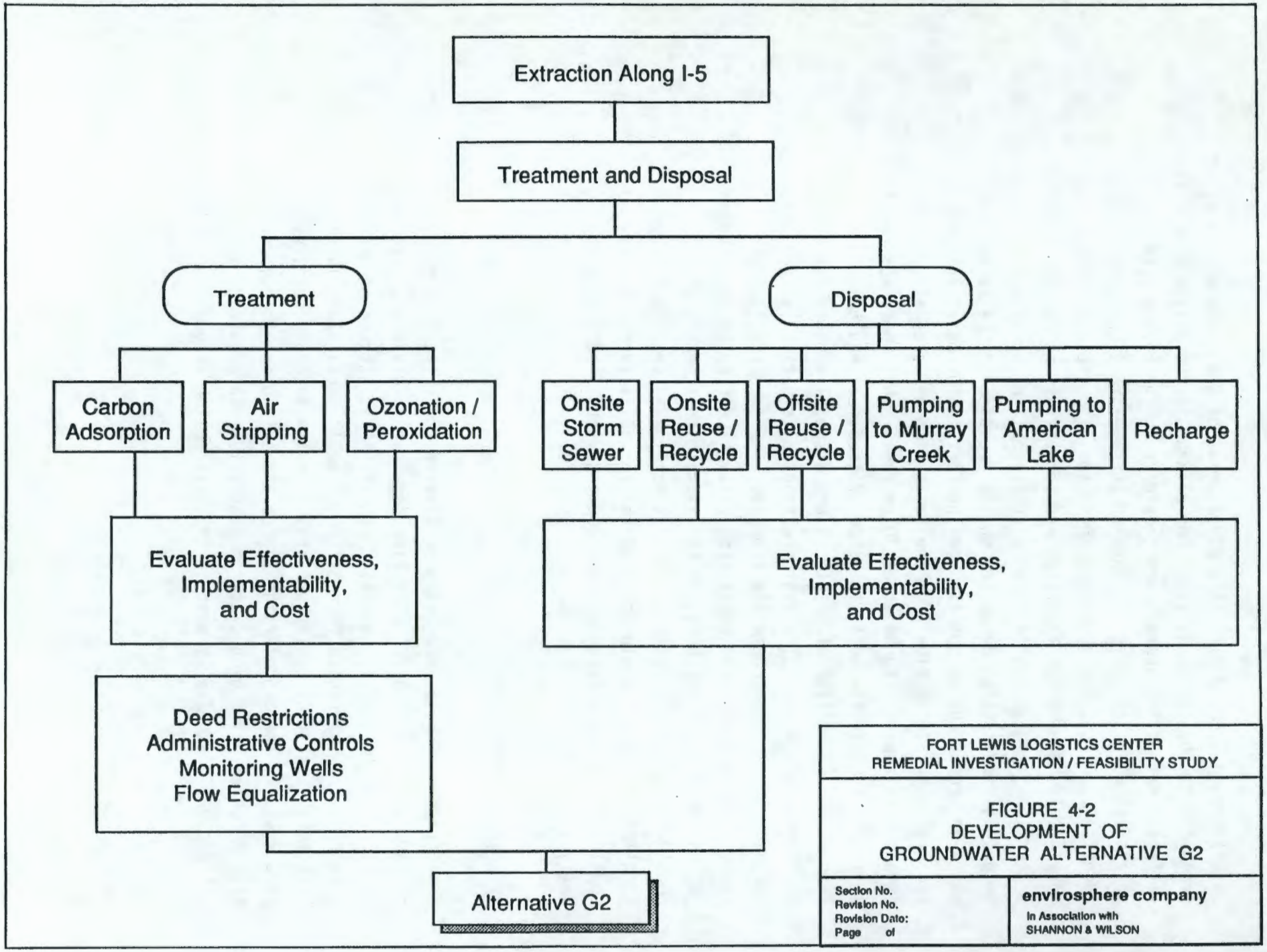

FORT LEWIS LOGISTICS CENTER
REMEDIAL INVESTIGATION / FEASIBILITY STUDY

FIGURE 4-2
DEVELOPMENT OF
GROUNDWATER ALTERNATIVE G2

Section No.
Revision No.
Revision Date:
Page of

envirosphere company
In Association with
SHANNON & WILSON

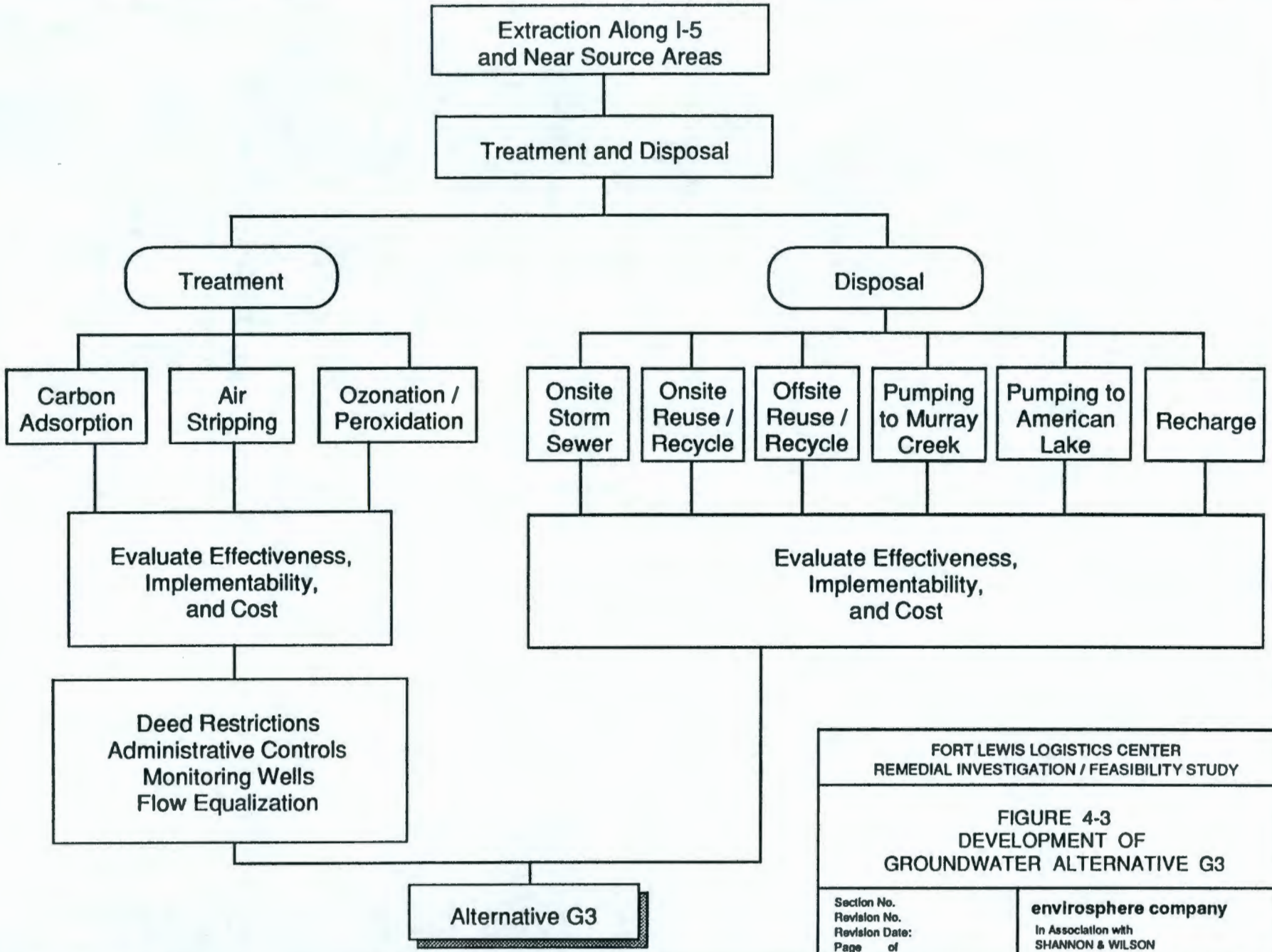

FORT LEWIS LOGISTICS CENTER
REMEDIAL INVESTIGATION / FEASIBILITY STUDY

FIGURE 4-3
DEVELOPMENT OF
GROUNDWATER ALTERNATIVE G3

Section No.
Revision No.
Revision Date:
Page of

envirosphere company
In Association with
SHANNON & WILSON

Before the treatment and disposal process options can be described and evaluated, the flowrate of groundwater pumped from the extraction wells to the treatment system and eventually to the disposal system and the concentration of contaminants in the extracted groundwater must be specified. Preliminary estimates of flowrates and concentrations for the two extraction schemes are presented in the following two sections. In the detailed analysis, the results of the groundwater modeling effort will be used to revise the estimates of flowrate and concentration.

4.2.1 Groundwater Extraction Along I-5

In this extraction scheme, wells would be located parallel to I-5 on the Fort Lewis property to intercept the contaminated groundwater flowing from the Logistics Center. Extraction of groundwater from these wells will stop the flow of contaminated groundwater into Tillicum. Approximately five wells would be required to intercept the the plume. The flowrate from each well is estimated to be 400 gallons per minute (gpm). Thus, the total flowrate from the five wells is estimated to be 2,000 gpm. The average concentration of TCE and DCE in the groundwater is expected to be 40 ppb and 4 ppb, respectively. The DCE concentration is expected to be well below the action level of 100 ppb, based on the results of the Remedial Investigation.

If this extraction scheme is combined with recharge of cleaned groundwater downgradient of the extraction wells, the time required to remediate the groundwater downgradient of the point of compliance (off post) is estimated to be 10 years. If recharge is not utilized as a disposal option, the time required to remediate the groundwater downgradient of the point of compliance (off post) is estimated to be greater than 20 years. The cleanup time for groundwater beneath the Fort Lewis Logistics Center is not known due to the uncertainty concerning the quantity of contaminants in potential source areas in the saturated zone. Pumping will most likely have to be continued

until the extracted groundwater is no longer contaminated. This is likely to be greater than 50 years, although as stated above the actual time required is not known. If pumping is discontinued before groundwater beneath the Logistics Center is cleaned, the groundwater beneath Tillicum would again become contaminated.

4.2.2 Combined Groundwater Extraction Along I-5 and Near Source Areas

In this extraction scheme, wells would be located along I-5 at the Fort Lewis Logistics Center property boundary and near areas where groundwater was found to be the most contaminated during the Remedial Investigation. Extraction of groundwater from the wells along I-5 will stop the flow of contaminated groundwater into Tillicum which is now occurring. Extraction of groundwater near source areas will accelerate the cleanup of groundwater beneath the Fort Lewis Logistics Center site.

As in the extraction scheme discussed in Section 4.2.1, approximately five wells would be required along I-5 to intercept the the plume. Another five wells would be required for extraction of contaminated groundwater from near the source areas on the site. It is assumed that the extracted groundwater from the five I-5 wells and the five source area wells will be treated and disposed of separately. The flowrate from each of the ten wells is estimated to be 400 gpm. Thus, the flowrate from the I-5 wells is estimated to be 2,000 gpm and the flowrate from the source areas is estimated to be 2,000 gpm also. The average concentration of TCE and DCE from the five wells along I-5 is expected to be 40 ppb and 4 ppb, respectively. The other five wells will have an average concentration of TCE and DCE at 100 ppb and 10 ppb.

The time required to remediate the groundwater downgradient of the point of compliance (off post) will be the same as in the first extraction scheme. If the treated groundwater is recharged downgradient of the extraction wells, the time required to remediate the groundwater downgradient of the point of compliance (off post) is estimated to be 10 years. If recharge is not utilized as a disposal

option, the time required to remediate the groundwater downgradient of the point of compliance (off post) is estimated to be greater than 20 years. The cleanup time for groundwater beneath the Fort Lewis Logistics Center is not as easily quantifiable because of the uncertainty regarding the quantity of contaminants in potential source areas in the saturated zone. The cleanup time for this extraction scheme, though, would be substantially less than the cleanup time required in the extraction scheme discussed previously because the most contaminated water is being pumped, thereby accelerating cleanup time. Forty years are estimated to be required to clean the groundwater beneath the Fort Lewis Logistics Center site, although the actual cleanup time may vary substantially from this value.

4.3 "NO REMEDIAL ACTIONS" ALTERNATIVES

The no groundwater remedial action alternatives consist of the no action alternative. The no action alternative is described in Section 4.3.1 and is evaluated in Section 4.3.2.

4.3.1 Description of "No Remedial Actions" Alternatives

The no action alternative is described in this section. The evaluation of this alternative is discussed in Section 4.3.2.

The no action alternative is an option required by the National Contingency Plan (NCP) for purposes of comparison with remediation alternatives. Under this option, no actions would be taken to remediate the groundwater contaminated with TCE and DCE. A long-term monitoring program would be implemented to provide updated information on the migration of contaminants in the upper and lower aquifers. Both private wells and monitoring wells would be sampled on a routine basis, and the program modified as the plume migrates. No administrative controls would be implemented.

4.3.2 Evaluation of "No Remedial Actions" Alternatives

The no action alternative was not evaluated against effectiveness, implementability, and cost criteria because the NCP requires that this alternative be carried forward to the detailed evaluation regardless of the outcome of the evaluation.

4.4 TREATMENT PROCESS OPTIONS ASSUMING GROUNDWATER EXTRACTION ALONG I-5

Air stripping, carbon adsorption, and ozonation/peroxidation are described in Section 4.4.1 and evaluated in Section 4.4.2. Since the groundwater is assumed to be extracted along I-5, the flowrate and concentration values presented in Section 4.2.1 are used in designing the treatment systems in this section.

4.4.1 Description of Treatment Process Options Assuming Groundwater Extraction Along I-5

Air stripping, carbon adsorption, and ozonation/peroxidation are described in Sections 4.4.1.1, 4.4.1.2, and 4.4.1.3, respectively.

4.4.1.1 Air Stripping

A flow diagram for the air stripping system is shown in Figure 4-4, and the design criteria and design values are presented in Table 4-1. The air stripping treatment process relies on the favorable volatilization of chlorinated contaminants from water into air. Contaminated water enters the top of the air stripping column and flows down through the packing material in a thin film. An air stream is forced upward through the column. Within the tower, the contaminants are transferred from the thin film of contaminated water into the flowing air stream. Treated water exits from the bottom of the column, while air containing the volatilized contaminants is exhausted through the top. The removal efficiency of the stripping tower depends on the packing height, the air-to-water ratio, and the type of packing utilized.

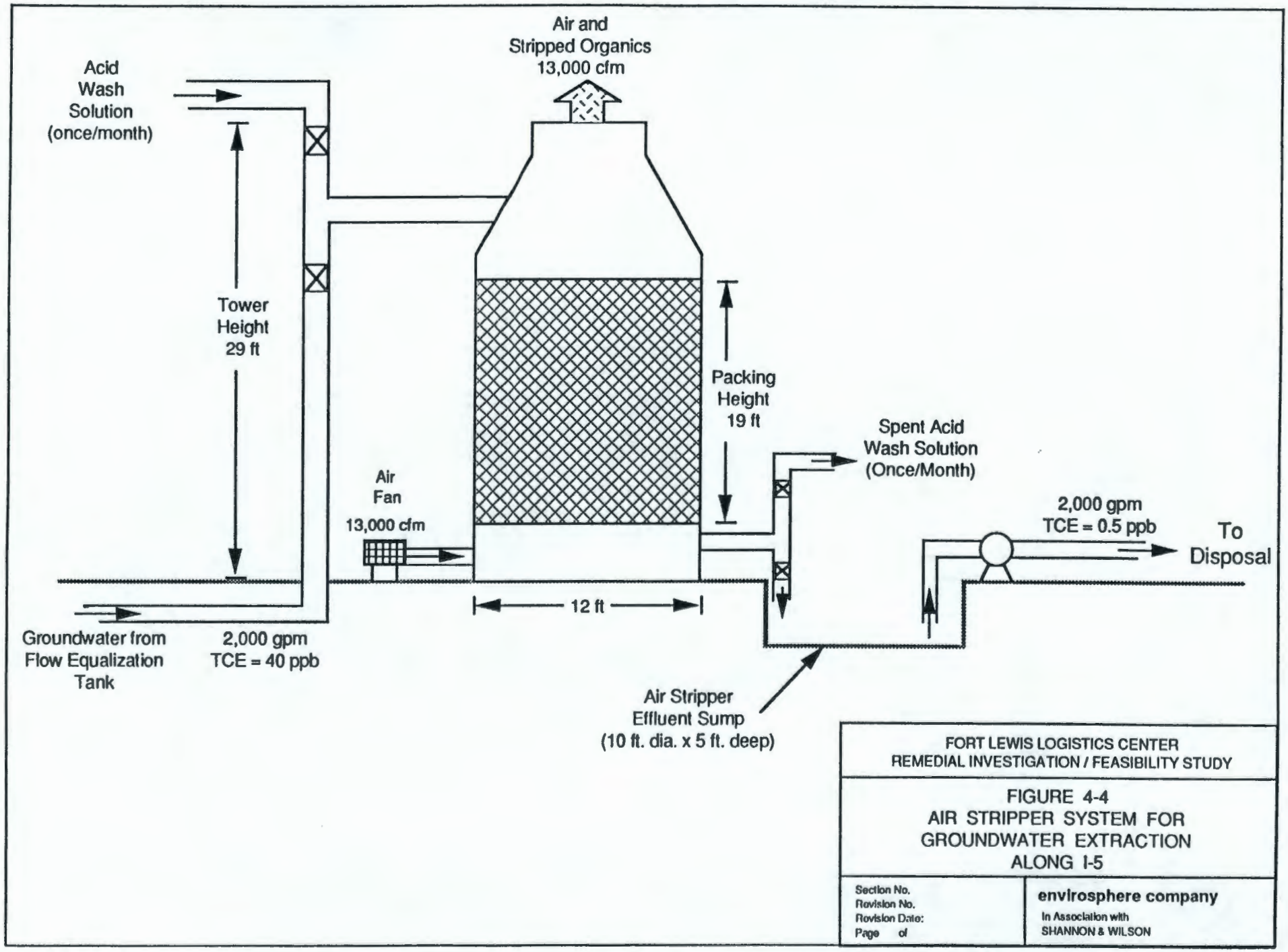

FORT LEWIS LOGISTICS CENTER
REMEDIAL INVESTIGATION / FEASIBILITY STUDY

FIGURE 4-4
AIR STRIPPER SYSTEM FOR
GROUNDWATER EXTRACTION
ALONG I-5

Section No.
Revision No.
Revision Date:
Page of

envirosphere company
In Association with
SHANNON & WILSON

TABLE 4-1

DESIGN CRITERIA AND DESIGN VALUES FOR AIR STRIPPER SYSTEM FOR GROUNDWATER EXTRACTION ALONG I-5

Item	Value
Design Criteria	
Design Flowrate	2,000 gpm
Inlet Concentration	
TCE	40 ppb
DCE	4 ppb
Outlet Concentration	
TCE	0.5 ppb
DCE	Already meets objective of less than 20% of MCLG
Design Values	
Number of Units	0.5
Air Stripper Diameter	12 ft
Air Stripper Height	29 ft
Packing Height	19 ft
Air-Liquid Ratio	50:1
Air Flowrate	13,000 cfm
Liquid Loading	18 gpm/ft^2
Fan Power	26 hp
Air Stripper Effluent Sump Dimensions	10 ft dia. x 5 ft deep

Extracted groundwater will be pumped to a flow equalization tank and then pumped directly to an air stripping tower at a rate of 2,000 gpm. In the air stripping tower, the concentration of TCE in the groundwater is to be reduced from 40 ppb to 0.5 ppb. The volatilized TCE will be discharged with the air to the atmosphere, and the treated groundwater will drain into a sump. From the sump, the treated groundwater will be pumped to the disposal location.

One 12-foot diameter air stripping tower is required to handle the 2,000 gpm flowrate, and 19 feet of packing and a 50:1 air-to-water ratio are required to reduce the TCE concentration in the water from 40 ppb to 0.5 ppb (Calgon 1988). Approximately 0.95 lbs of TCE will be emitted to the air per day. The EPA-approved PTPLU computer dispersion model was used to estimate the worst case annual TCE concentration downwind of the stripping tower. The estimated worst case concentration was 0.053 ug/m^3. This concentration would result in less than a 10^{-6} risk to residents and is therefore protective of human health (see Appendix H).

4.4.1.2 Carbon Adsorption

A flow diagram for the carbon adsorption system is shown in Figure 4-5, and the design criteria and design values are presented in Table 4-2. The process of contaminant adsorption onto activated carbon involves bringing the contaminated water into direct contact with the carbon. This is usually accomplished by passing the water to be treated through a series of packed bed adsorbers. The activated carbon selectively adsorbs hazardous constituents by a surface phenomenon in which organic molecules are bound to the internal pores of the carbon granules. Eventually, all adsorption sites become occupied and "breakthrough" of the contaminant occurs, at which point the carbon must be replaced or regenerated.

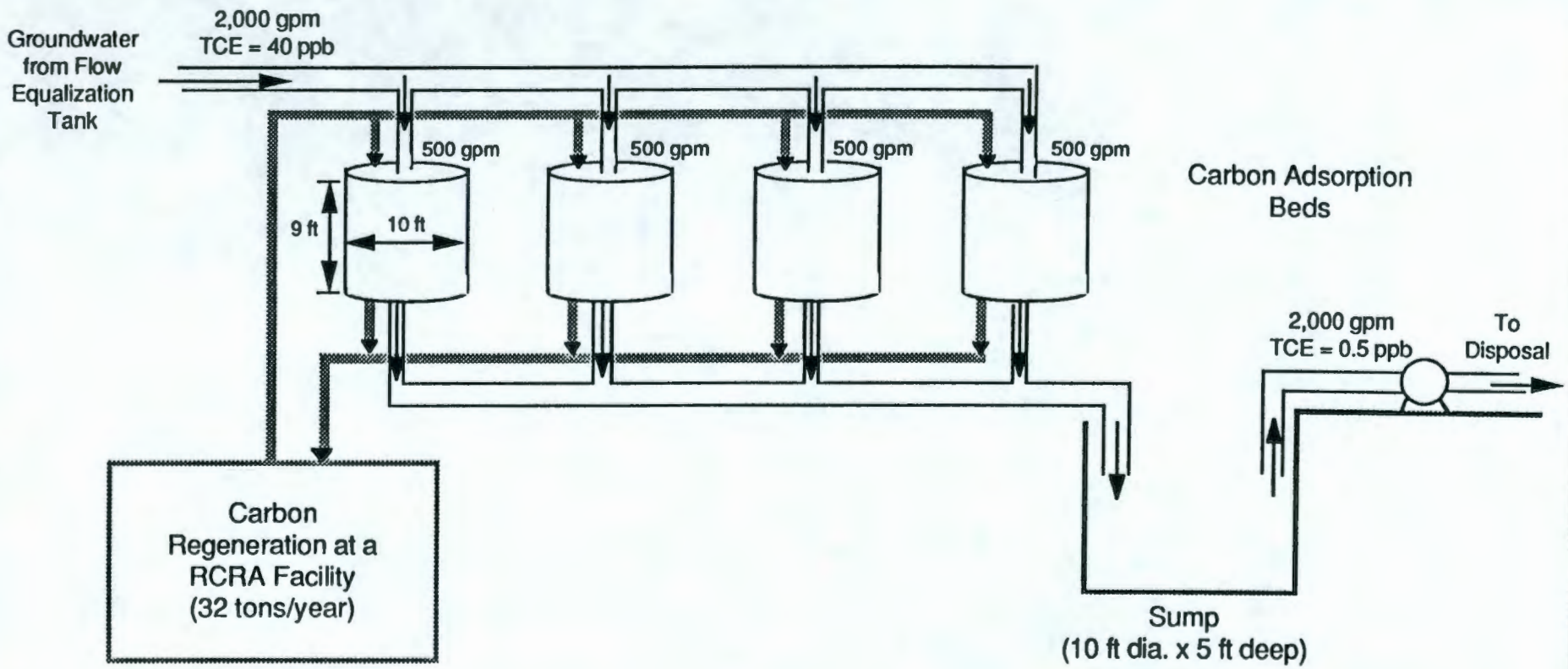

FORT LEWIS LOGISTICS CENTER
REMEDIAL INVESTIGATION / FEASIBILITY STUDY

FIGURE 4-5
CARBON ADSORPTION SYSTEM FOR GROUNDWATER EXTRACTION ALONG I-5

Section No.
Revision No.
Revision Date:
Page of

envirosphere company
In Association with
SHANNON & WILSON

TABLE 4-2

DESIGN CRITERIA AND DESIGN VALUES FOR CARBON ADSORPTION SYSTEM FOR GROUNDWATER EXTRACTION ALONG I-5

Item	Value
Design Criteria	
Design Flowrate	2,000 gpm
Inlet Concentration	
TCE	40 ppb
DCE	4 ppb
Outlet Concentration	
TCE	0.5 ppb
DCE	Already meets objective of less than 20% of the MCLG
Hydraulic Loading	6 gpm/ft^2
Design Values	
Bed Diameter	10 ft
Bed Depth	9 ft
Number of Vessels	4
Contact Time	10 min
Carbon Usage	0.06 lbs/1000 gal
Annual Carbon Usage	32 tons

Extracted groundwater will be pumped to a flow equalization tank and then pumped directly to four carbon adsorption beds at a rate of 500 gpm per bed. In the carbon adsorption beds, the concentration of TCE in the groundwater will be reduced from 40 ppb to 0.5 ppb. The treated groundwater will be collected in a sump and then pumped to the disposal location. When breakthrough occurs, the carbon will be replaced with regenerated or virgin carbon. The spent carbon will be regenerated off-site at a RCRA regeneration facility. In the regeneration process, TCE and DCE will first be released from the surface of the carbon by volatilization and will then be permanently destroyed by combustion.

Four 10-foot diameter carbon adsorption beds are required to handle the 2,000 gpm flowrate, and a 9-foot bed depth (10 minute contact time) is required to reduce the TCE concentration in the groundwater from 40 ppb to 0.5 ppb (Calgon 1988). The carbon usage is expected to be approximately 0.06 lbs/1,000 gallons treated (Calgon, 1988). Thus, approximately 60,000 lbs of carbon per year are required.

4.4.1.3 Ozonation/Peroxidation

In the ozonation/peroxidation process, contaminants are destroyed by chemical oxidation. The groundwater is first treated with ozone and hydrogen peroxide in vertical contactors. The effluent from these contactors is then fed to UV/oxidation reactors for final treatment. Within the vertical contactors and the UV/oxidation reactors, the contaminants are oxidized. A flow diagram for the ozonation/ peroxidation system is shown in Figure 4-6, and the design criteria and design values are presented in Table 4-3.

Extracted groundwater will be pumped to a flow equalization tank and then to the ozonation/peroxidation system. The 2,000 gpm flow will be split and fed to two 8,000 gallon vertical contactors. Ozone is generated on-site with an ozonator, and the air stream containing 1 to 2 percent ozone is directly infused into the contaminated water in the two vertical contactors. Hydrogen peroxide is metered into the

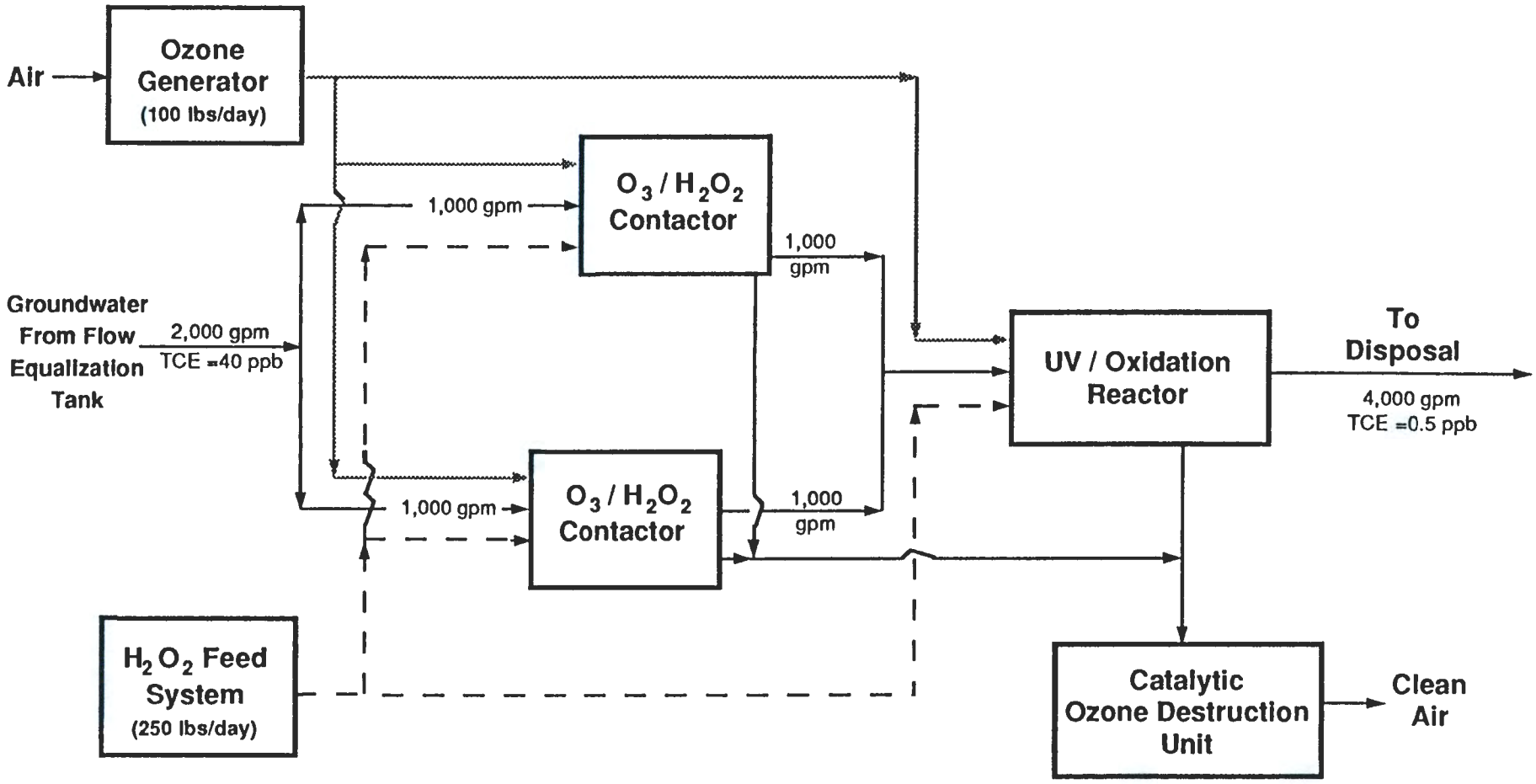

FORT LEWIS LOGISTICS CENTER
REMEDIAL INVESTIGATION / FEASIBILITY STUDY

FIGURE 4-6
OZONATION / PEROXIDATION SYSTEM FOR GROUNDWATER EXTRACTION ALONG I-5

Section No.
Revision No.
Revision Date:
Page of

envirosphere company
In Association with
SHANNON & WILSON

TABLE 4-3

DESIGN CRITERIA AND DESIGN VALUES FOR OZONATION/PEROXIDATION SYSTEM FOR GROUNDWATER EXTRACTION ALONG I-5

Item	Value
Design Criteria	
Design Flowrate	2,000 gpm
Inlet Concentration	
TCE	40 ppb
DCE	4 ppb
Outlet Concentration	
TCE	0.5 ppb
DCE	Already meets objective of less than 20% of the MCLG
Design Values	
Size of O_3/H_2O_2 Contactor	8,000 gal
Number of Units	2
Size of UV/Oxidation Reactor	4,000 gal
Number of Units	1
Total Ozone Dose	4.20 mg/l
Ozone Use	100 lbs/day
Total Hydrogen Peroxide Dose	10.5 mg/l
Hydrogen Peroxide Use	250 lbs/day
UV Light Dose	4.68 watts/gal
UV Light Wattage	18,762 watts

contamination water in the two vertical contactors. The effluent from the two vertical contactors is recombined and fed to the 4,000 gallon UV/oxidation reactor. Additional ozone and hydrogen peroxide is added to the water entering the reactor and the mixture is irradiated with UV light. The concentration of TCE in the groundwater will be reduced from 40 ppb to 0.5 ppb in the system, and total of 100 lbs/day of ozone and 250 lbs/day hydrogen peroxide will be required (ULTROX 1988). The gaseous emissions will be passed through a catalytic ozone destruction unit prior to venting to the atmosphere.

4.4.2 Evaluation of Treatment Process Options Assuming Groundwater Extraction Along I-5

The evaluation of air stripping, carbon adsorption, and ozonation/peroxidation is summarized in Table 4-4. Included on this table are capital, operating, and present worth costs. Details of the evaluation and cost estimates are presented in Appendix C.

Air stripping was selected as the groundwater treatment process. Carbon adsorption and ozonation/peroxidation will be slightly more effective than air stripping in protecting human health and in achieving a reduction of toxicity, mobility, and volume due to the emission of TCE to the atmosphere. However, air modeling in combination with a risk analysis has shown the emissions to be below the 10^{-6} risk level for residents. Carbon adsorption and air stripping are more easily implemented than ozonation/peroxidation. Air stripping is the least expensive option, while carbon adsorption is the most expensive option. Air stripping was chosen as the treatment process option to be carried forward to detailed analysis because 1) it is easier to implement than ozonation/peroxidation, 2) it provides adequate protection of human health and the environment as shown by the results of the air modeling and risk analysis, and 3) it is much less expensive than competing options.

TABLE 4-4

EVALUATION OF TREATMENT OPTIONS FOR GROUNDWATER EXTRACTION ALONG I-5

Criteria	Air Stripping	Carbon Adsorption	Ozonation/Peroxidation
EFFECTIVENESS:			
Short-term protection of human health and environment.	Rating=Medium. Contaminants transferred from water to air. Maximum off-site concentrations will result in less than 10^{-6} risk to residents.	Rating=High. Provides good protection of human health and the environment during remediation. No handling of spent carbon necessary. Can treat variations in concentrations.	Rating=High. Provides good protection of human health and the environment during remediation. Gaseous emissions can be controlled by proper design of reaction chamber. Possible exposure to ozone if leak develops.
Long-Term protection of human health and environment.	Rating=High. Long-term protection of human health and environment is achieved due to cleanup of contaminated groundwater. Photochemical reactions in atmosphere result in destruction of contaminants.	Rating=High. Long-term protection of human health and environment is achieved due to cleanup of contaminated groundwater. Destruction of contaminants through regeneration of carbon.	Rating=High. Long-term protection of human health and environment is achieved due to cleanup of contaminated groundwater and the destruction of contaminants.
Reduction of Toxicity, Mobility, or Volume	Rating=Medium. Mobility of contaminants increased by transfer to air. Photochemical reactions result in destruction of contaminants.	Rating= High. Mobility of the TCE and DCE is decreased by adsorption onto activated carbon. Destruction through regeneration of carbon.	Rating=High. Permanent destruction through chemical oxidation of contaminants to carbon dioxide and water.
IMPLEMENTABILITY:			
Ability to construct, reliably operate, and meet technology-specific regulations for process options until remedial action is complete.	Rating=High. Skid-mounted air strippers readily available for ease of construction. Air strippers are relatively easy to operate.	Rating=High. Skid-mounted carbon adsorption beds readily available for ease of construction. Carbon adsorption beds can be readily operated, although manpower requirements may be greater than air stripping due to carbon replacement and backwash requirements.	Rating=Medium. Skid-mounted ozonation/peroxidation systems are available from two manufacturers. Since this is a relatively new technology, the ability of this technology to operate reliably has not been demonstrated in the literature. Ozonation/peroxidation is a more complicated system, thus more difficult to operate.
Ability to operate, maintain, replace, and monitor components of the alternative after remedial action is complete.	N/A	N/A	N/A

7677K

TABLE 4-4 (Continued)

EVALUATION OF TREATMENT OPTIONS FOR GROUNDWATER EXTRACTION ALONG I-5

Criteria	Air Stripping	Carbon Adsorption	Ozonation/Peroxidation
Ability to obtain approvals from other offices and agencies.	Rating=High. Approvals should be easily obtained since the concentrations of organic contaminants in the gaseous emissions will result in less than a 10^{-6} risk to residents. RCRA permit may be required for spent acid discharge.	Rating=High. Since contaminants are adsorbed onto carbon and then transported to a RCRA regeneration facility, a variety of RCRA permits may be required. No difficulties in obtaining approvals are expected.	Rating=High. Approvals should be easily obtained since the gaseous emissions will be passed through a catalytic ozone destruction unit prior to venting to the atomosphere.
Availability of RCRA treatment, storage, and disposal services and capacity.	N/A	Rating=High. RCRA regeneration facility readily available.	N/A
Requirements for and availability of specific equipment and technical specialists.	Rating=High. Air stripping equipment and specialists readily available.	Rating=High. Carbon adsorption equipment and specialists readily available.	Rating=Medium. Only two known manufacturers of ozonation/peroxidation equipment.
ROM COSTS (+50%, -30%):			
Capital	$244,000	$640,000	$794,000
O&M (Yearly)	$69,000	$140,000	$96,000
Present Worth (n=30, i=10)	$894,000	$1,960,000	$1,698,000

7677K

4.5 DISPOSAL PROCESS OPTIONS ASSUMING GROUNDWATER EXTRACTION ALONG I-5

On-site storm sewer, on-site reuse/recycle, off-site reuse/recycle, pumping to Murray Creek, pumping to American Lake, and recharge are described in Section 4.5.1 and evaluated in Section 4.5.2. Since the groundwater is assumed to be extracted along I-5, the flowrate value presented in Section 4.2.1 is used in designing the disposal systems in this section.

4.5.1 Description of Disposal Process Options Assuming Groundwater Extraction Along I-5

On-site storm sewer, on-site reuse/recycle, off-site reuse/recycle, pumping to Murray Creek, Pumping to American Lake, and recharge are described in Sections 4.5.1.1, 4.5.1.2, 4.5.1.3, 4.5.1.4, 4.5.1.5, and 4.5.1.6, respectively.

4.5.1.1 <u>On-Site Storm Sewer</u>

The treated groundwater is pumped at a rate of 2,000 gpm from the treatment plant located adjacent to the extraction wells along I-5 to the closest on-site storm sewer which has adequate capacity and which empties into Murray Creek. Some of the storm sewers empty into Murray Creek and some empty into the Industrial Waste Treatment Plant. The flow to the Industrial Waste Treatment Plant already exceeds capacity at certain times of the year. Additional flow to this plant would be unacceptable. Thus, only storm sewers which empty into Murray Creek are acceptable. A 30 hp pump will be used to pump the treated groundwater through a 10" ductile iron pipe to the closest acceptable on-site storm sewer. The distance to the nearest acceptable storm sewer is assumed to be 1,000 ft. The pipe will be laid in a five foot deep trench on top of compacted sandfill. Select backfill will be used to fill the remaining void in the trench. A cross-section of the trench is shown in Figure 4-7.

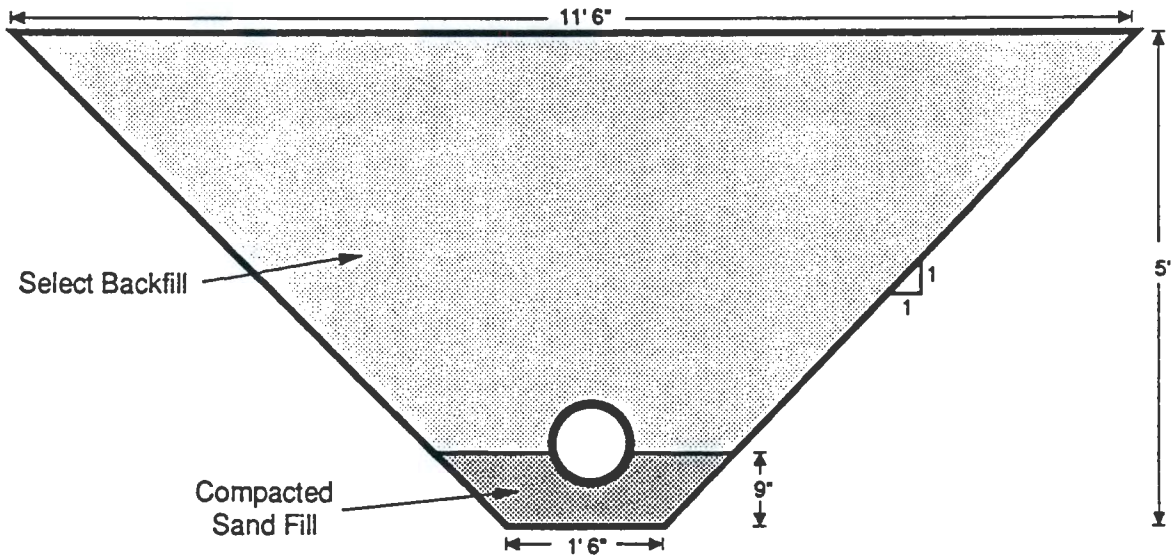

FORT LEWIS LOGISTICS CENTER
REMEDIAL INVESTIGATION / FEASIBILITY STUDY

FIGURE 4-7
CROSS SECTION OF PIPE TRENCH

Section No.
Revision No.
Revision Date:
Page of

envirosphere company
In Association with
SHANNON & WILSON

4.5.1.2 On-Site Reuse/Recycle

The treated groundwater is pumped at a rate of 2,000 gpm from the treatment plant located adjacent to the extraction wells along I-5 to storage tanks and then to the water distribution system. The storage tank will have a 240,000 gallon capacity to allow for 2 hours of storage, and a 160 hp pump will be used to pump the groundwater through a 10" ductile iron pipe to the nearest water main. The pump has been sized assuming that the distance to the nearest water main is 2,000 feet and that 162 feet of head are required to tap into the existing water main. The pipe will be laid in a five foot deep trench on top of compacted sandfill, and select backfill will be used to fill the remaining void in the trench. A cross section of the trench is shown in Figure 4-7.

4.5.1.3 Off-Site Reuse/Recycle

The treated groundwater is pumped at a rate of 2,000 gpm from the treatment plant located adjacent to the extraction wells along I-5 to storage tanks and then to the Lakewood Water District Distribution System in the American Lake Garden Tract. The storage tank will have a 240,000 gallon capacity to allow for 2 hours of storage, and a 160 hp pump will be used to pump the groundwater through a 10" ductile iron pipe to the nearest water main in the American Lake Garden Tract. The pump has been sized assuming that the distance to the nearest water main is 2,000 feet and that 162 feet of head are required to tap into the existing water main. The pipe will be placed in a five foot deep trench on top of compacted sandfill, and select backfill will be used to fill the remaining void in the trench. A cross-section of the trench is shown in Figure 4-7.

4.5.1.4 Pumping to Murray Creek

The treated groundwater is pumped at a rate of 2,000 gpm from the treatment plant located adjacent to the extraction wells along I-5 to the closest point along Murray Creek. A 30 hp pump will be used to

pump the treated groundwater through a 10" ductile iron pipe to Murray Creek. The distance to the creek is estimated to be 1,000 feet. The pipe will be laid in a five foot deep trench on top of compacted sand fill. Select backfill will be used to fill the remaining void in the trench. A cross-section of the trench is shown in Figure 4-7. In addition, a properly designed discharge outfall will be constructed to prevent erosion of the streambed.

4.5.1.5 Pumping to American Lake

The treated groundwater is pumped at a rate of 2,000 gpm from the treatment plant located adjacent to the extraction wells along I-5 to American Lake. A 160 hp pump will be used to pump the treated groundwater through a 10" ductile iron pipe to American Lake. The distance from the treatment plant to American Lake is estimated to be 5,000 feet. The pipe will be laid in a five foot deep trench as shown in Figure 4-7, except for where the pipe passes under the highway. A four foot tunnel located 25 feet below the surface of the highway will be constructed for passing the pipe under the highway. The tunnel will be approximately 350 feet long. In Tillicum, the pipe will be laid in trenches (as described above) along the town streets. The discharge into American Lake is assumed to be 20 feet below the water surface. Thus, approximately 1,000 feet of pipe will be laid underwater on the lake floor.

4.5.1.6 Recharge

The treated groundwater is pumped at a rate of 2,000 gpm through a 10" ductile iron pipe to the recharge system located about 300 feet south of I-5 and parallel to the extraction wells. The distance from the treatment plant to the recharge system is estimated to be 1,000 feet. The recharge system consists of the distribution line, distribution branches, and the perforated pipe from which the groundwater drains. The distribution system is located to effect appropriate gradient control, to reverse groundwater carrying the plume (back to the extraction wells), to flush the contamination in Tillicum, and at the

same time to avoid spreading the contamination. It consists of a 3,500-foot-long distribution line (6 inch diameter ductile iron pipe) which is connected to the perforated pipe by means of the distribution branches (6 inch diameter ductile iron pipe) located every 100 feet (see Figure 4-8). The perforated pipe is laid at the bottom of a 10 foot deep trench and the distribution line is laid in the same trench five feet above the perforated pipe. The two pipes are connected by 36 distribution branches running vertically. The whole trench is backfilled with gravel to promote infiltration. A cross-section of the recharge trench is shown in Figure 4-9. A 200 hp pump is used to overcome frictional losses in the pipes, but does not provide any additional head to inject water into the ground. The water flows from the holes in the perforated pipe by gravity.

4.5.2 Evaluation of Disposal Process Options Assuming Groundwater Extraction Along I-5

The evaluation of on-site storm sewer, on-site reuse/recycle, off-site reuse/recycle, pumping to Murray Creek, pumping to American Lake, and recharge is summarized in Table 4-5. Included in this table are capital, operating, and present worth costs. Details of the evaluation and cost estimates are presented in Appendix C.

Recharge was chosen as the disposal option to be carried forward to the detailed analysis because of the substantial benefits obtained in terms of cleanup time and the ease of implementing this option. Pumping the treated groundwater to either Murray Creek or to an on-site storm sewer was not chosen because the creek has less flowrate than the treated groundwater flowrate. The two reuse/recycle options were not chosen because there is no demonstrated need for the treated groundwater and reuse as a drinking water supply would not be acceptable to the community. Finally, all the discharge options including discharging to American Lake would not result in the benefit of a faster cleanup time. Using recharge as the disposal option will significantly reduce the time required to clean groundwater beneath Tillicum. Thus, recharge was chosen as the disposal option.

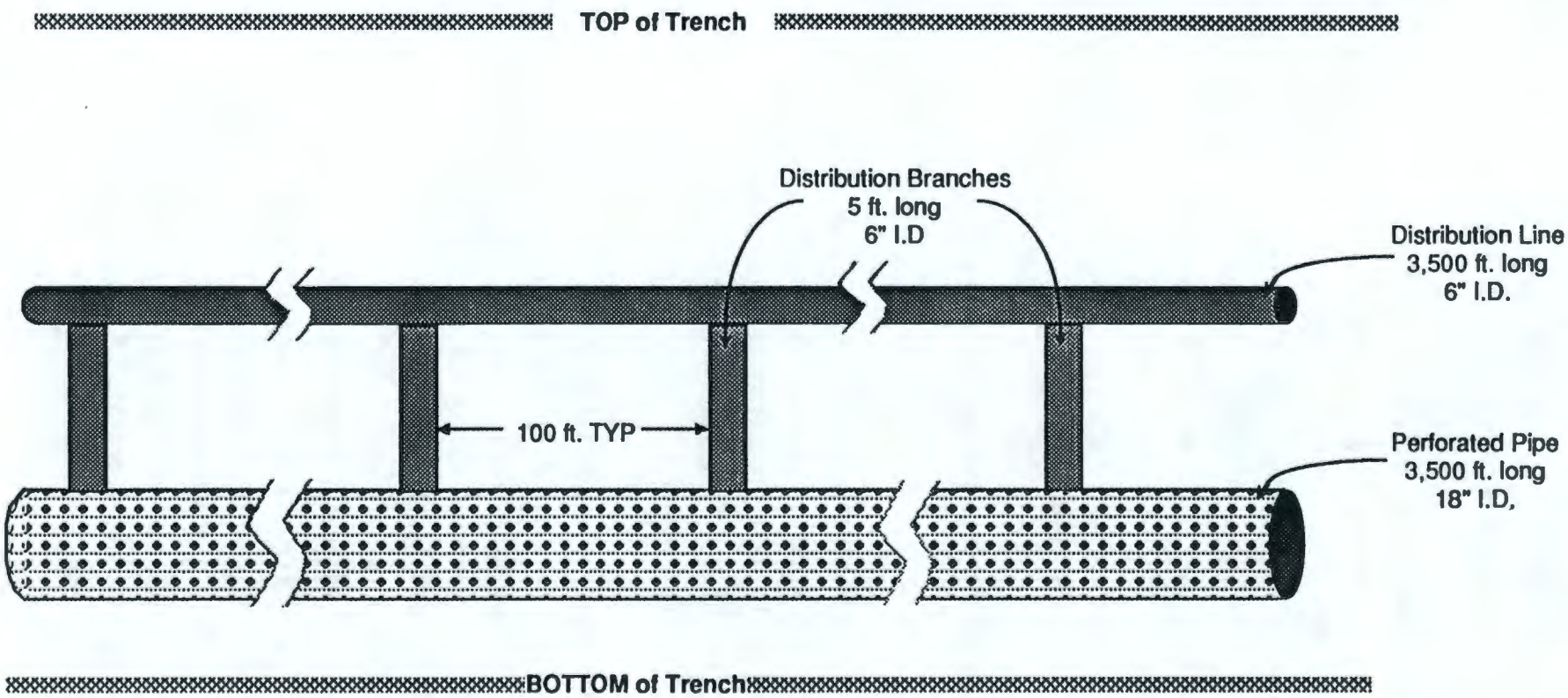

NOTE: NOT TO SCALE

FORT LEWIS LOGISTICS CENTER
REMEDIAL INVESTIGATION / FEASIBILITY STUDY

FIGURE 4-8
RECHARGE PIPING SCHEMATIC
FOR I-5 RECHARGE SYSTEM

Section No.
Revision No.
Revision Date:
Page of

envirosphere company
In Association with
SHANNON & WILSON

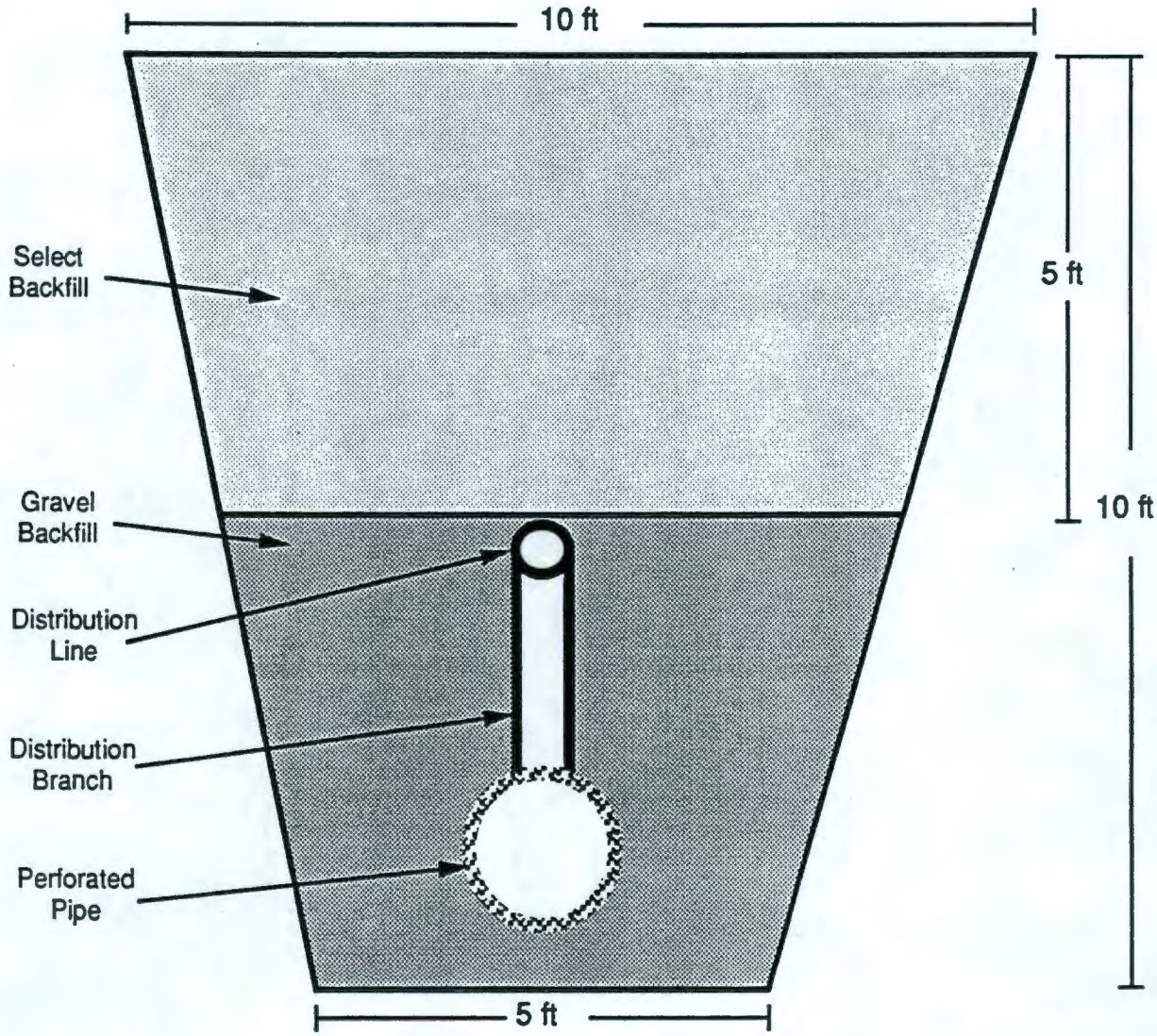

FORT LEWIS LOGISTICS CENTER
REMEDIAL INVESTIGATION / FEASIBILITY STUDY

FIGURE 4-9
RECHARGE TRENCH CROSS SECTION

Section No.
Revision No.
Revision Date:
Page of

envirosphere company
In Association with
SHANNON & WILSON

TABLE 4-5

EVALUATION OF DISPOSAL OPTIONS FOR GROUNDWATER EXTRACTION ALONG I-5

Criteria	On-Site Storm Sewer	On-Site Reuse/Recycle	Off-Site Reuse/Recycle	Pumping to Murray Creek	Pumping to American Lake	Recharge
EFFECTIVENESS:						
Short-Term Protection of Human Health and Environment.	Rating=Medium. Effective method of disposing groundwater. Cleanup of groundwater beneath Tillicum may be slowed if groundwater is not recharged. Since storm sewer empties into Murray Creek, this option may impact the creek because of increased flow.	Rating=Low. If treatment plant malfunctioned, consumption of contaminated water may create health risk. Cleanup of groundwater beneath Tillicum may be slowed if groundwater not recharged.	Rating=Low. Same as on-site reuse/recycle.	Rating=Medium. Effective method of disposing groundwater. Cleanup of groundwater beneath Tillicum may be slowed if groundwater is not recharged. May impact the creek because of increased flow.	Rating=Medium. Effective method of disposing groundwater. Cleanup of groundwater beneath Tillicum may be slowed if groundwater is not recharged. May impact the lake.	Rating=High. Will accelerate cleanup of groundwater beneath Tillicum.
Long-Term Protection of Human Health and Environment.	N/A	N/A	N/A	N/A	N/A	N/A
Reduction of Toxicity, Mobility or Volume.	N/A	N/A	N/A	N/A	N/A	N/A
IMPLEMENTABILITY:						
Ability to Construct, Reliably Operate, and Meet Technology-Specific Regulations for Process Options Until Remedial Action is Complete.	Rating=Medium. Construction of pipeline would be moderately difficult because of underground utilities. Meeting discharge limits would not be difficult.	Rating=Low. Complex piping system including storage tanks would be needed for distribution of water to a variety of places. Meeting drinking water standards would not be difficult but extra monitoring would be required.	Rating=Low. Same as on-site reuse/recycle.	Rating=Medium. Construction of pipeline would be difficult because of underground utilities, but not as complex as reuse/recycle. Meeting discharge limits would not be difficult.	Rating=Medium. Same as pumping to Murray Creek.	Rating=High. Construction of a recharge system would be easy. Meeting drinking water standards would not be difficult.

7677K

TABLE 4-5 (cont.)

EVALUATION OF DISPOSAL OPTIONS FOR GROUNDWATER EXTRACTION ALONG I-5

Criteria	On-Site Storm Sewer	On-Site Reuse/Recycle	Off-Site Reuse/Recycle	Pumping to Murray Creek	Pumping to American Lake	Recharge
Ability to Operate, Maintain, Replace, and Monitor Components of the Alternative After Remedial Action is Complete.	N/A	N/A	N/A	N/A	N/A	N/A
Ability to Obtain Approvals from Other Offices and Agencies.	Rating=Medium. Ability to obtain NPDES permit is in question due to the high flowrate of treated groundwater when compared to the flowrate of Murray Creek.	Rating=High. Since treated groundwater would meet all drinking water standards, approvals should be easily obtained.	Rating=Low. Since treated groundwater would meet all drinking water standards, approvals should be easily obtained, but community would would most likely reject this option.	Rating=Medium. Ability to obtain NPDES permit is in question due to the high flowrate of treated groundwater when compared to the flowrate of Murray Creek.	Rating=High. Ability to obtain NPDES permit not in question because American Lake is a large lake. This disposal option is not constrained by the capacity of Murray Creek.	Rating=High. Obtaining approvals for recharge should not be difficult if water is treated to the drinking water standards.
Availability of RCRA Treatment, Storage and Disposal Services, and Capacity.	N/A	N/A	N/A	N/A	N/A	N/A
Requirements for, and Availability of Specific Equipment and Services.	Rating=Low. Availability of storm sewers is not known.	Rating=Low. Flowrate of treated groundwater much higher than needed.	Rating=Low. Same as on-site reuse/recycle.	Rating=High. Piping equipment readily available.	Rating=High. Same as pumping to Murray Creek.	Rating=High. Recharge equipment readily available.
ROM COST (+50%, -30%):						
Capital	$96,000	$662,000	$662,000	$94,000	$586,000	$762,000
O&M	$17,500	$73,500	$73,500	$17,500	$64,000	$77,000
Present Worth	$261,000	$1,355,000	$1,355,000	$259,000	$1,189,000	$1,488,000

7677K

4.6 TREATMENT PROCESS OPTIONS ASSUMING COMBINED GROUNDWATER EXTRACTION ALONG I-5 AND NEAR SOURCE AREAS

Air stripping, carbon adsorption, and ozonation/peroxidation are described in Section 4.6.1 and evaluated in Section 4.6.2. Since the groundwater is assumed to be extracted along I-5 and near source areas, the flowrate and concentration values presented in Section 4.2.2 are used in designing the treatment systems in this section.

4.6.1 Description of Treatment Process Options Assuming Combined Groundwater Extraction Along I-5 and Near Source Areas

Air stripping, carbon adsorption, and ozonation/peroxidation are described in Sections 4.6.1.1, 4.6.1.2, and 4.6.1.3, respectively.

4.6.1.1 Air Stripping

As discussed in Section 4.2.2, separate treatment plants will be used for the groundwater extracted along I-5 and the groundwater extracted near source areas. The I-5 treatment system is described in Section 4.4.1.1, and the description is therefore not repeated here. The source area treatment system is described below.

A flow diagram for the source area air stripping system is shown in Figure 4-10, and the design criteria and design values are presented in Table 4-6. Extracted groundwater will be pumped to a flow equalization tank and then pumped directly to an air stripping tower. The tower will receive 2,000 gpm of contaminated groundwater. In the air stripping tower, the concentration of TCE in the groundwater is to be reduced from 100 ppb to 0.5 ppb. The volatilized TCE will be discharged with the air to the atmosphere, and the treated groundwater will drain into a sump. From the sump, the treated groundwater will be pumped to the disposal location.

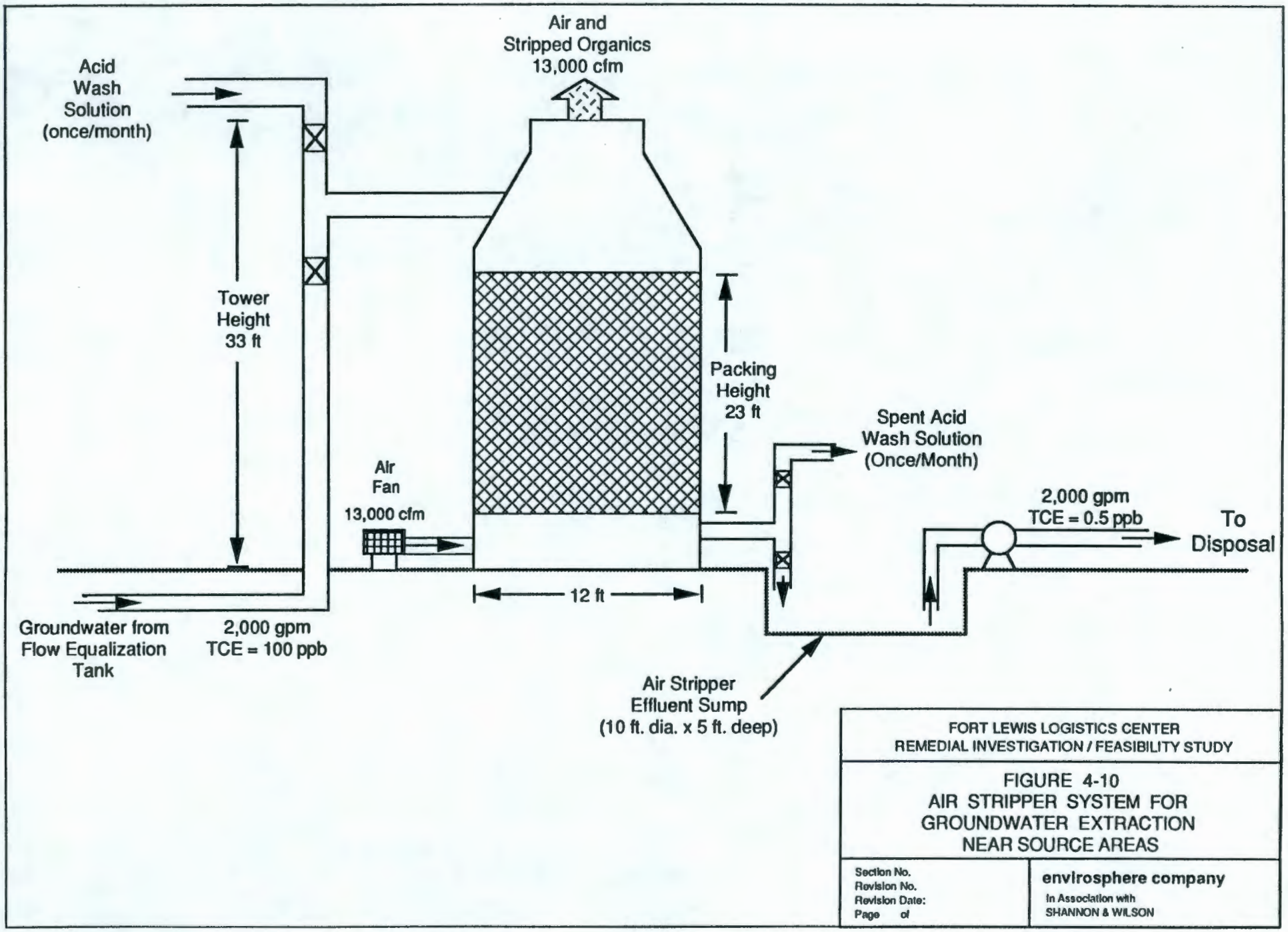

FORT LEWIS LOGISTICS CENTER
REMEDIAL INVESTIGATION / FEASIBILITY STUDY

FIGURE 4-10
AIR STRIPPER SYSTEM FOR
GROUNDWATER EXTRACTION
NEAR SOURCE AREAS

Section No.
Revision No.
Revision Date:
Page of

envirosphere company
In Association with
SHANNON & WILSON

TABLE 4-6

DESIGN CRITERIA AND DESIGN VALUES FOR AIR STRIPPER SYSTEM FOR GROUNDWATER EXTRACTION NEAR SOURCE AREAS

Item	Value
Design Criteria	
Design Flowrate	2,000 gpm
Inlet Concentration	
TCE	100 ppb
DCE	10 ppb
Outlet Concentration	
TCE	0.5 ppb
DCE	Already meets objective of less than 20% of the MCLG
Design Values	
Number of Units	1
Air Stripper Diameter	12 ft
Air Stripper Height	33 ft
Packing Height	23 ft
Air:Liquid Ratio	50:1
Air Flowrate	13,000 cfm
Liquid Loading	18 gpm/ft^2
Fan Power	26 hp
Air Stripper Effluent Sump Dimensions	10 ft dia. x 5 ft deep

One 12-foot diameter air stripping tower is required to handle the 2,000 gpm flowrate, and 23 feet of packing and a 50:1 air-to-water ratio are required to reduce the TCE concentration in the water from 100 ppb to 0.5 ppb (Calgon 1988). Approximately 2.39 pounds of TCE will be emitted to the air per day from the source area air stripper. In addition, 0.95 pounds of TCE will be emitted from the I-5 air stripper. The EPA-approved PTPLU computer dispersion model was used to estimate the worst case annual TCE concentration downwind of the stripping towers. The estimated worst case concentration is 0.060 ug/m^3. This concentration would result in less than a 10^{-6} risk to residents, and is therefore protective of human health (see Appendix H).

4.6.1.2 Carbon Adsorption

As discussed in Section 4.2.2, separate treatment plants will be used for the groundwater extracted along I-5 and the groundwater extracted near source areas. See Section 4.4.1.2 for a description of the I-5 treatment system. The source area treatment system is described below.

A flow diagram for the source area carbon adsorption system is shown in Figure 4-11, and the design criteria and design values are presented in Table 4-7. Extracted groundwater will be pumped to a flow equalization tank and then pumped directly to four carbon adsorption beds at a rate of 500 gpm per bed. In the carbon adsorption beds, the concentration of TCE in the groundwater will be reduced from 100 ppb to 0.5 ppb. The treated groundwater will be collected in a sump and then pumped to the disposal location. When breakthrough occurs, the carbon will be replaced with regenerated or virgin carbon. The spent carbon will be regenerated off-site at a RCRA regeneration facility. In the regeneration process, TCE and DCE will first be released from the

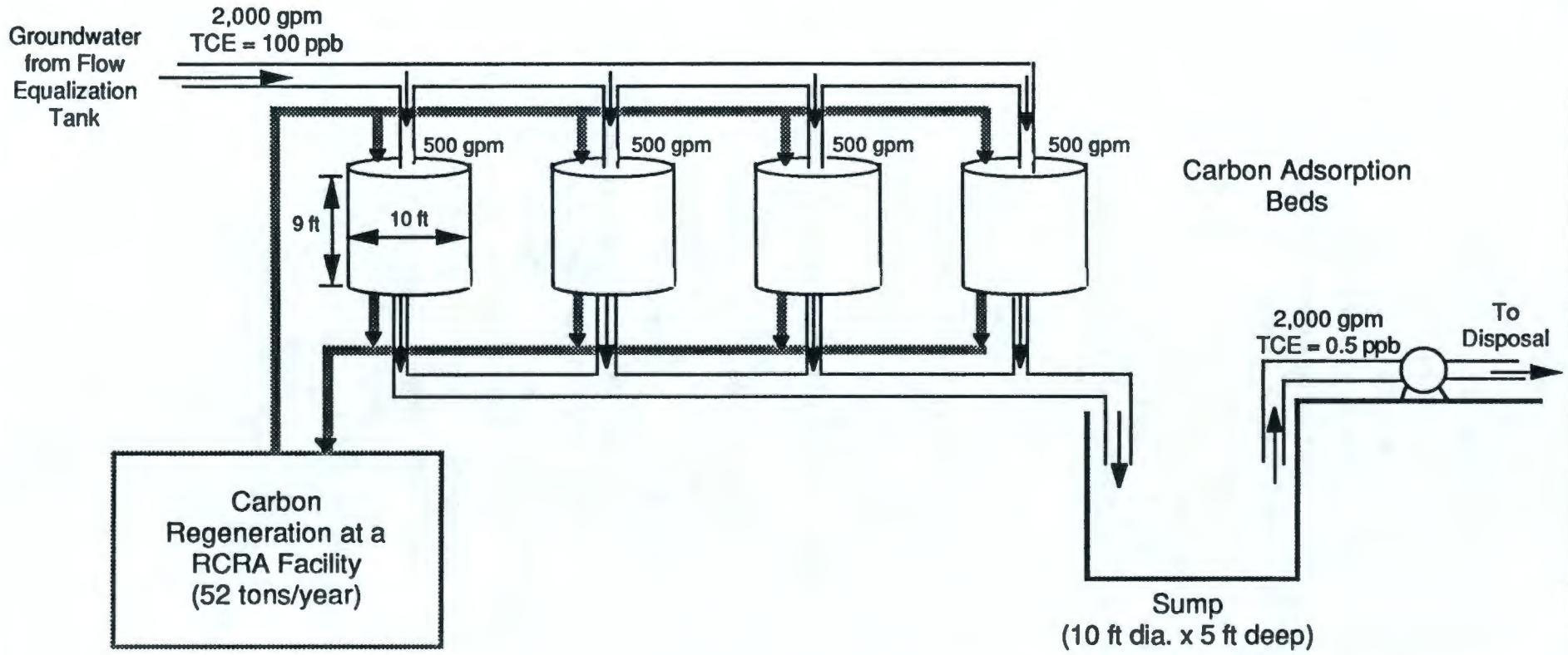

FORT LEWIS LOGISTICS CENTER
REMEDIAL INVESTIGATION / FEASIBILITY STUDY

FIGURE 4-11
CARBON ADSORPTION SYSTEM FOR GROUNDWATER EXTRACTION NEAR SOURCE AREAS

Section No.
Revision No.
Revision Date:
Page of

envirosphere company
In Association with SHANNON & WILSON

TABLE 4-7

DESIGN CRITERIA AND DESIGN VALUES FOR CARBON ADSORPTION SYSTEM FOR GROUNDWATER EXTRACTION NEAR SOURCE AREAS

Item	Value
Design Criteria	
Design Flowrate	2,000 gpm
Inlet Concentration	
TCE	100 ppb
DCE	10 ppb
Outlet Concentration	
TCE	0.5 ppb
DCE	Already meets objective of less than 20% of the MCLG
Hydraulic Loading	6 gpm/ft^2
Design Values	
Bed Diameter	10 ft
Bed Depth	9 ft
Number of Vessels	4
Contact Time	10.6 min
Carbon Usage	0.08 lbs/1000 gal
Annual Carbon Usage	84 tons

surface of the carbon by volatilization, and will then be permanently destroyed by combustion.

Four 10-foot diameter carbon adsorption beds are required to handle the 2,000 gpm flowrate, and a 9-foot bed depth (10 minute contact time) is required to reduce the TCE concentration in the groundwater from 100 ppb to 0.5 ppb (Calgon 1988). The carbon usage is expected to be approximately 0.1 lbs/1,000 gallons treated (Calgon 1988). Thus, approximately 105,000 lbs of carbon are required per year in addition to the 60,000 lbs of carbon required in the I-5 treatment plant.

4.6.1.3 Ozonation/Peroxidation

As discussed in Section 4.2.2, separate treatment plants will be used for the groundwater extracted along I-5 and the groundwater extracted from near source areas. The I-5 treatment plant is described in Section 4.4.1.3, and the description is therefore not repeated here. The source area treatment system is described below.

A flow diagram for the source area ozonation/peroxidation system is shown in Figure 4-12, and the design criteria and design values are presented in Table 4-8. Extracted groundwater will be pumped to a flow equalization tank and then to the ozonation/peroxidation system. The 2,000 gpm flow will be split and fed to two 8,000 gallon vertical contactors. Ozone is generated on-site with an ozonator, and the air stream containing 1 to 2 percent ozone is directly infused into the contaminated water in the two vertical contactors. Hydrogen peroxide is metered into the contaminated water in the two vertical contactors. The effluent from each vertical contactor is combined and fed to a 4,000 gallon UV/oxidation reactor. Additional ozone and hydrogen peroxide is added to the water entering the reactor and the mixture is irradiated with UV light. The concentration of TCE in the groundwater will be reduced from 100 ppb to 0.5 ppb in the system, and a total of 100 lbs/day of ozone and 500 lbs/day hydrogen peroxide will be required (ULTROX 1988). The gaseous emissions will be passed through a catalytic ozone destruction unit prior to venting to the atmosphere.

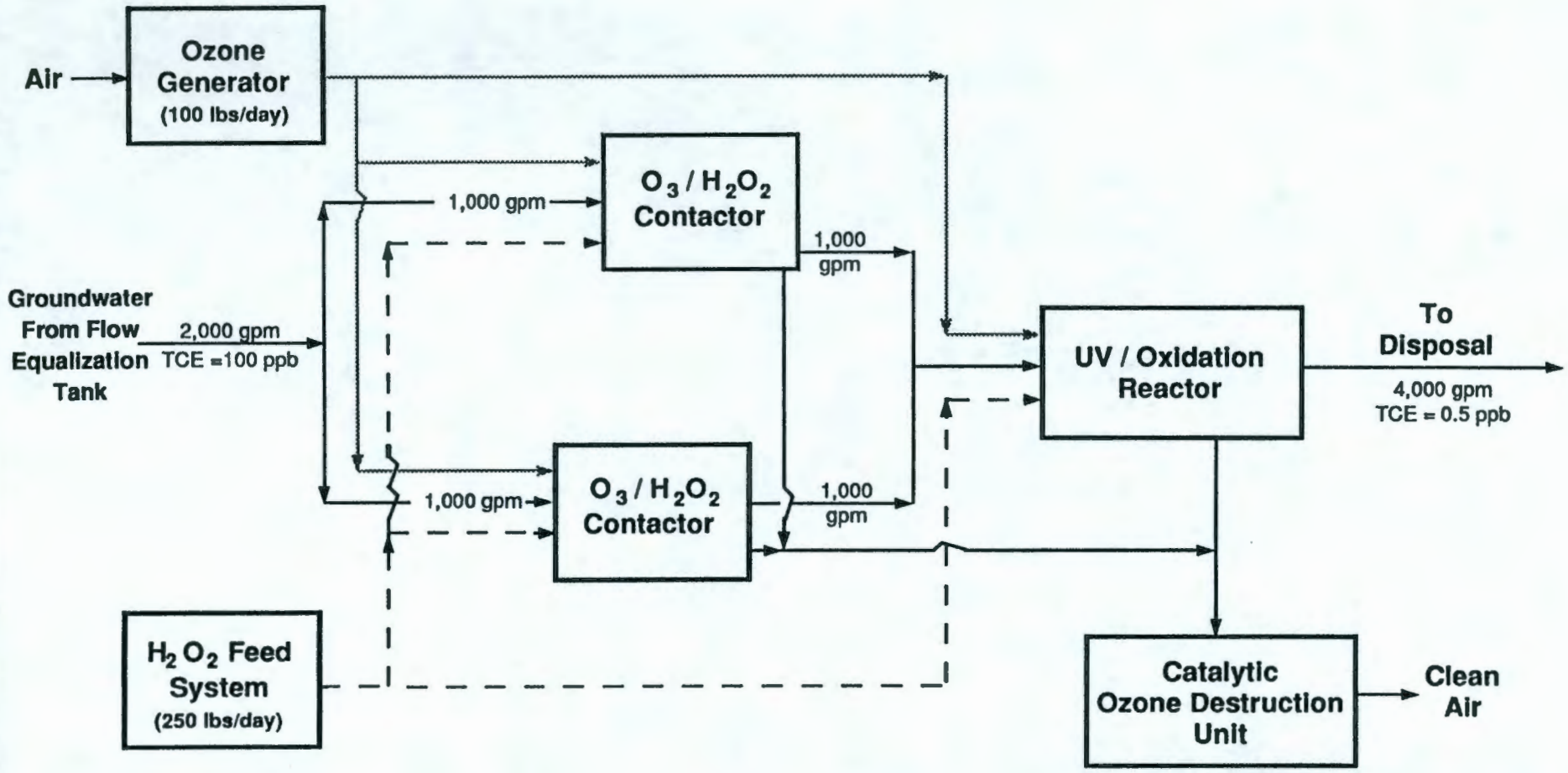

FORT LEWIS LOGISTICS CENTER
REMEDIAL INVESTIGATION / FEASIBILITY STUDY

FIGURE 4-12
OZONATION / PEROXIDATION SYSTEM FOR GROUNDWATER EXTRACTION NEAR SOURCE AREAS

Section No.
Revision No.
Revision Date:
Page of

envirosphere company
In Association with SHANNON & WILSON

TABLE 4-8

DESIGN CRITERIA AND DESIGN VALUES FOR OZONATION/PEROXIDATION SYSTEM FOR GROUNDWATER EXTRACTION NEAR SOURCE AREAS

Item	Value
Design Criteria	
Design Flowrate	2,000 gpm
Inlet Concentration	
TCE	100 ppb
DCE	10 ppb
Outlet Concentration	
TCE	0.5 ppb
DCE	Already meets objective of less than RMCL
Design Values	
Size of O_3/H_2O_2 Contactor	8,000 gal
Number of Units	2
Size of UV/Oxidation Reactor	4,000 gal
Number of Units	1
Total Ozone Dose	4.20 mg/l
Ozone Use	100 lbs/day
Total Hydrogen Peroxide Dose	10.5 mg/l
Hydrogen Peroxide Use	250 lbs/day
UV Light Dose	5.4 watts/gal
UV Light Wattage	21,600 watts

4.6.2 Evaluation of Treatment Process Options Assuming Combined Groundwater Extraction Along I-5 and Near Source Areas

The evaluation of air stripping, carbon adsorption, and ozonation/peroxidation is summarized in Table 4-9. Included on this table are capital, operating, and present worth costs. Details of the evaluation and cost estimates are presented in Appendix C.

Air stripping was selected as the groundwater treatment process. Carbon adsorption and ozonation/peroxidation will be slightly more effective than air stripping in protecting human health and in achieving a reduction of toxicity, mobility, and volume due to the emission of TCE to the atmosphere. However, air modeling in combination with a risk analysis has shown the emissions to be below the 10^{-6} risk level for residents. Carbon adsorption and air stripping are more easily implemented than ozonation/peroxidation. Air stripping is the least expensive option, while carbon adsorption is the most expensive option. Air stripping is chosen as the treatment process option to be carried forward to detailed analysis because 1) it is easier to implement than ozonation/peroxidation, 2) it provides adequate protection of human health and the environment as shown by the results of the air modeling and risk analysis, and 3) it is much less expensive than competing options.

4.7 DISPOSAL PROCESS OPTIONS ASSUMING COMBINED GROUNDWATER EXTRACTION ALONG I-5 AND NEAR SOURCE AREAS

On-site storm sewer, on-site reuse/recycle, off-site reuse/recycle, pumping to Murray Creek, pumping to American Lake, and recharge are described in Section 4.7.1 and evaluated in Section 4.7.2. Since the groundwater is assumed to be extracted along I-5 and near source areas, the flowrate values presented in Section 4.2.2 are used in designing the disposal systems in this section.

TABLE 4-9

EVALUATION OF TREATMENT OPTIONS FOR COMBINED GROUNDWATER EXTRACTION ALONG I-5 AND NEAR SOURCE AREAS

Criteria	Air Stripping	Carbon Adsorption	Ozonation/Peroxidation
EFFECTIVENESS:			
Short-term protection of human health and environment.	Rating=Medium. Contaminants transferred from water to air. Maximum off-site concentrations will result in less than 10^{-6} risk to residents.	Rating=High. Provides good protection of human health and the environment during remediation. No handling of spent carbon necessary. Can treat variations in concentrations.	Rating=High. Provides good protection of human health and the environment during remediation. Gaseous emissions can be controlled by proper design of reaction chamber. Possible exposure to ozone if leak develops.
Long-term protection of human health and environment.	Rating=High. Long-term protection of human health and environment is achieved due to cleanup of contaminated groundwater. Photochemical reactions in atmosphere result in destruction of contaminants.	Rating=High. Long-term protection of human health and environment is achieved due to cleanup of contaminated groundwater. Destruction of contaminants through regeneration of carbon.	Rating=High. Long-term protection of human health and environment is achieved due to cleanup of contaminated groundwater and the destruction of contaminants.
Reduction of Toxicity, Mobility, or Volume	Rating=Medium. Mobility of contaminants increased by transfer to air. Photochemical reactions result in destruction of contaminants in the atmosphere.	Rating= High. Mobility of the TCE and DCE is decreased by adsorption onto activated carbon. Destruction through regeneration of carbon.	Rating=High. Permanent destruction through chemical oxidation of contaminants to carbon dioxide and water.
IMPLEMENTABILITY:			
Ability to construct, reliably operate, and meet technology-specific regulations for process options until remedial action is complete.	Rating=High. Prefabricated air strippers are readily available for ease of construction. Air strippers are relatively easy to operate.	Rating=High. Skid-mounted carbon adsorption beds readily available for ease of construction. Carbon adsorption beds can be readily operated, although manpower requirements may be greater than air stripping due to carbon replacement and backwash requirements.	Rating=Medium. Skid-mounted ozonation/peroxidation systems are available from two manufacturers. Since this is a relatively new technology, the ability of this technology to operate reliably has not been demonstrated in the literature. Ozonation/peroxidation is a more complicated system, thus more difficult to operate.
Ability to operate, maintain, replace, and monitor components of the alternative after remedial action is complete.	N/A	N/A	N/A

7677K

TABLE 4-9 (Continued)

EVALUATION OF TREATMENT OPTIONS FOR COMBINED GROUNDWATER EXTRACTION ALONG I-5 AND NEAR SOURCE AREAS

Criteria	Air Stripping	Carbon Adsorption	Ozonation/Peroxidation
Ability to obtain approvals from other offices and agencies.	Rating=High. Approvals should be easily obtained since the concentrations of organic contaminants in the gaseous emissions will result in less than a 10^{-6} risk to residents. RCRA permit may be required for spent acid discharge.	Rating=High. Since contaminants are adsorbed onto carbon and then transported to a RCRA regeneration facility, a variety of RCRA permits may be required. No difficulties in obtaining approvals are expected.	Rating=High. Approvals should be easily obtained since the gaseous emissions will be passed through a catalytic ozone destruction unit prior to venting to the atmosphere.
Availability of RCRA treatment, storage, and disposal services and capacity.	N/A	Rating=High. RCRA regeneration facility required.	N/A
Requirements for and availability of specific equipment and technical specialists.	Rating=High. Air stripping equipment and specialists readily available.	Rating=High. Carbon adsorption equipment and specialists readily available.	Rating=Medium. Only two known manufacturers of ozonation/peroxidation equipment.
ROM COSTS (+50%, -30%):			
Capital	$473,000	$1,250,000	$1,006,000
O&M (Yearly)	$138,000	$347,000	$192,000
Present Worth (n=30, i=10)	$1,773,000	$4,520,000	$2,816,000

7677K

4.7.1 Description of Disposal Process Options Assuming Combined Groundwater Extraction Along I-5 and Near Source Areas

On-site storm sewer, on-site reuse/recycle, off-site reuse/recycle, pumping to Murray Creek, pumping to American Lake, and recharge are described in Sections 4.7.1.1, 4.7.1.2, 4.7.1.3, 4.7.1.4, 4.7.1.5, and 4.7.1.6, respectively. See section 4.5.1 for a description of these alternatives as they relate to the I-5 extraction wells.

4.7.1.1 On-Site Storm Sewer

Disposal of treated groundwater from the treatment plant located near I-5 to an on-site storm sewer is discussed in section 4.5.1.1 and this discussion is not repeated here. Disposal of treated groundwater from the treatment plant near the source areas is discussed below.

Treated groundwater from the treatment plant located near the wells pumping from near the source areas is pumped at a rate of 2,000 gpm to the closest on-site storm sewer which has adequate capacity and which empties into Murray Creek. Here again, a 30 hp pump will be used to pump the treated groundwater through a 10" ductile iron pipe to the closest acceptable on-site storm sewer. The distance to the nearest acceptable storm sewer is assumed to be 1,000 feet. The pipe will be laid in a five foot deep trench as described above.

4.7.1.2 On-Site Reuse/Recycle

The treated groundwater from the treatment plant located adjacent to the extraction wells along I-5 is pumped at a rate of 2,000 gpm to a storage tank and then to the water distribution system. The treated groundwater from the treatment plant located near the wells pumping from near the source areas is also pumped at a rate of 2,000 gpm to a separate storage tank and then to the water distribution system. Each storage tank will have a 240,000 gallon capacity to allow for 2 hours

of storage. The groundwater from each storage tank will be pumped using 160 hp pumps through separate 10" ductile iron pipes to the two nearest water mains. The pumps have been sized assuming the distance to the nearest water main in each case is 2,000 feet and that 162 feet of head are required to tap into the existing water mains. The two piping systems will be laid in five foot deep trenches on top of compacted sand fill, and select backfill will be used to fill the remaining void in the trenches. A cross-section of the trenches is shown in Figure 4-7.

4.7.1.3 Off-Site Reuse/Recycle

The treated groundwater from both treatment plants is pumped to two separate storage tanks and then to the Lakewood Water District Distribution System in the American Lake Garden Tract. Each storage tank will have a 240,000 gallon capacity to allow for 2 hours of storage. The groundwater from the storage tank located adjacent to the treatment plant near I-5 will be pumped using a 160 hp pump through a 10" ductile iron pipe to the nearest water main in the American Lake Garden Tract. The groundwater from the storage tank located adjacent to the source area treatment plant will be pumped using a 300 hp pump through a 10" ductile iron pipe to the nearest water main in the American Lake Garden Tract. The 160 hp pump has been sized assuming that the distance to the nearest water main is 2,000 feet and that 162 feet of head are required to tap into the existing water mains. The 300 hp pump has been sized assuming that the distance to the nearest water main is 10,000 feet and that 162 feet of head are required to tap into the existing water mains. The two piping systems will be laid in five foot trenches on top of compacted sand fill, and select backfill will be used to fill the remaining void in the trenches. A cross-section of the trenches is shown in Figure 4-7.

4.7.1.4 Pumping to Murray Creek

Disposal of treated groundwater from the treatment plant located near I-5 by pumping to Murray Creek is discussed in Section 4.5.1.4 and this discussion is not repeated here. The treated groundwater from the treatment plant located near the wells pumping from near the source areas is also pumped at a rate of 2,000 gpm to the closest point along Murray Creek. A 75 hp pump will be used to pump the treated groundwater from the source area treatment plant through a 10" ductile iron pipe to the closest point along Murray Creek. The distance to the creek is estimated to be 2,500 feet. The pipe will be laid in a five foot deep trench as described above. Properly designed outfalls will be required for both discharges to prevent erosion of the streambed.

4.7.1.5 Pumping to American Lake

The treated groundwater from the treatment plant located near the wells pumping from near the source areas is pumped at a rate of 2,000 gpm to the treatment plant located adjacent to the extraction wells along I-5. A 387 hp pump will be used to pump the treated groundwater from the source area treatment plant through a 10" ductile iron pipe to the I-5 treatment plant. The pump was sized assuming that the two plants are 10,000 feet apart and that the pump provides sufficient head to merge with the water from the I-5 treatment plant. At the treatment plant near I-5, the treated groundwater from near the source areas is combined with the 2,000 gpm flow of treated groundwater from the treatment plant near I-5. The combined flow is then pumped to American Lake for discharge below the surface of the lake. A 160 hp pump is used to pump the combined groundwater flows from the I-5 treatment plant through a 10" ductile iron pipe to American Lake. The pipelines will be laid in five foot deep trenches as shown in Figure 4-7, except for where the pipe passes under the highway. A four foot tunnel located 25 feet below the surface of the highway will be constructed for passing the pipe under the highway. The tunnel will be approximately 350 feet long. In Tillicum, the pipe will be laid in

trenches along the town streets. The discharge into American Lake is assumed to be 20 feet below the water surface. Thus, approximately 1,000 feet of pipe will be laid underwater on the lake floor.

4.7.1.6 Recharge

Disposal of treated groundwater from the treatment plant located near I-5 by recharging is discussed in section 4.5.1.6 and this discussion is not repeated here. Disposal of treated groundwater from the treatment plant located near the source areas is discussed below.

The treated groundwater from the treatment plant located near the wells pumping from near the source areas is pumped at a rate of 2,000 gpm to the recharge system located upgradient of the East Gate Disposal Yard and the source area extraction wells. The location of the recharge system will be chosen in order to provide additional flushing through the zones where "secondary sources" of contaminants may remain, and also to avoid causing any wider spread of contamination. The treated groundwater is pumped through a 10" ductile iron pipe to the recharge system. The distance from the treatment plant to the recharge system is estimated to be 1,000 feet. The recharge system consists of the distribution line, distribution branches, and the perforated pipe from which the groundwater drains. The distribution system consists of a 2,000-foot-long distribution line (6" ductile iron pipe) which is connected to the perforated pipe by means of the distribution branches (6" diameter ductile iron pipe) located every 100 feet (see Figure 4-13). The perforated pipe is laid at the bottom of a 10 foot deep trench and the distribution line is laid in the same trench five feet above the perforated pipe. The two pipes are connected by 21 distribution branches running vertically. The whole trench is backfilled with gravel to promote infiltration. A 130 hp pump is used to overcome frictional losses in the pipes, but does not provide any additional head to inject water into the ground. The water flows from the holes in the perforated pipe by gravity.

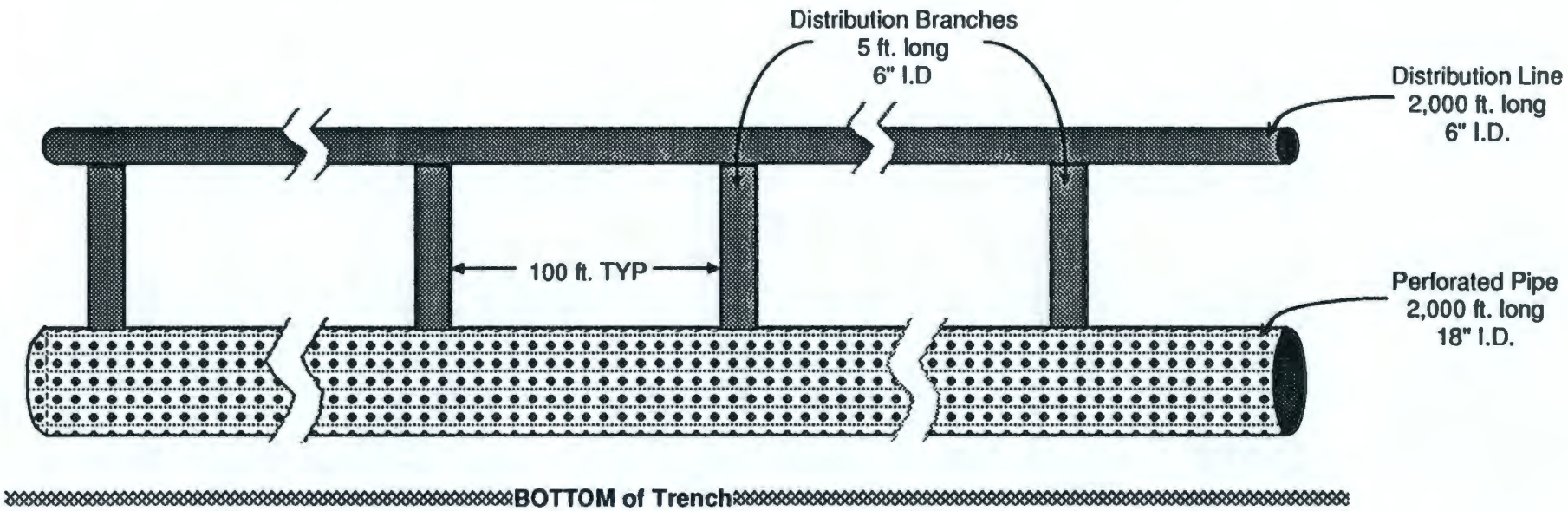

NOTE: NOT TO SCALE

FORT LEWIS LOGISTICS CENTER
REMEDIAL INVESTIGATION / FEASIBILITY STUDY

FIGURE 4-13
RECHARGE PIPING SCHEMATIC FOR
SOURCE AREA RECHARGE SYSTEM

Section No.
Revision No.
Revision Date:
Page of

envirosphere company
In Association with
SHANNON & WILSON

4.7.2 Evaluation of Disposal Process Options Assuming Combined Groundwater Extraction Along I-5 and Near Source Areas

The evaluation of on-site storm sewer, on-site reuse/recycle, off-site reuse/recycle, pumping to Murray Creek, pumping to American Lake, and recharge is summarized in Table 4-10. Included in this table are capital, operating, and present worth costs. Details of the evaluation and cost estimates are presented in Appendix C.

Recharge was chosen as the disposal option to be carried forward to the detailed analysis because of the substantial benefits obtained in terms of cleanup time and the ease of implementing this option. Pumping the treated groundwater to either Murray Creek or to an on-site storm sewer was not chosen because of expected difficulties in obtaining an NPDES permit (treated groundwater flowrate is much greater than creek flowrate). The two reuse/recycle options were not chosen because there is no demonstrated need for the treated groundwater and reuse as a drinking water supply would not be acceptable to the community. Finally, all the discharge options including discharging to American Lake would not result in the benefit of a faster cleanup time. Using recharge as the disposal option will significantly reduce the time required to clean the groundwater beneath Tillicum and the groundwater flowing through presumed source areas in the saturated zone. Thus, recharge was chosen as the disposal option.

4.8 ALTERNATIVE DEVELOPMENT

In this section, the final candidate alternatives that will undergo detailed analyses are developed. No action is discussed in Section 4.8.1, treatment and disposal process options assuming groundwater extraction along I-5 are discussed in Section 4.8.2, and treatment and disposal process options assuming combined groundwater extraction along I-5 and near source areas are discussed in Section 4.8.3.

TABLE 4-10

EVALUATION OF DISPOSAL OPTIONS FOR COMBINED GROUNDWATER EXTRACTION ALONG I-5 AND NEAR SOURCE AREAS

Criteria	On-Site Storm Sewer	On-Site Reuse/Recycle	Off-Site Reuse/Recycle	Pumping to Murray Creek	Pumping to American Lake	Recharge
EFFECTIVENESS:						
Short-Term Protection of Human Health and Environment.	Rating=Medium. Effective method of disposing groundwater. Cleanup of groundwater beneath Tillicum may be slowed if groundwater is not recharged. Since storm sewer empties into Murray Creek, this option may impact the creek because of increased flow.	Rating=Low. If treatment plant malfunctioned, consumption of contaminated water may create health risk. Cleanup of groundwater beneath Tillicum may be slowed if groundwater not recharged.	Rating=Low. Same as on-site reuse/recycle.	Rating=Medium. Effective method of disposing groundwater. Cleanup of groundwater beneath Tillicum may be slowed if groundwater is not recharged. May impact creek because of increased flow.	Rating=Medium. Effective method of disposing groundwater. Cleanup of groundwater beneath Tillicum may be slowed if groundwater is not recharged. May impact the lake.	Rating=High. Will accelerate cleanup of groundwater beneath Tillicum and near source areas.
Long-Term Protection of Human Health and Environment.	N/A	N/A	N/A	N/A	N/A	N/A
Reduction of Toxicity, Mobility or Volume.	N/A	N/A	N/A	N/A	N/A	N/A
IMPLEMENTABILITY:						
Ability to Construct, Reliably Operate, and Meet Technology-Specific Regulations for Process Options Until Remedial Action is Complete.	Rating=High. Hookup with existing storm sewers should be relatively easy. Meeting discharge limits would not be difficult.	Rating=Low. Complex piping system including storage tanks would be needed for distribution of water to a variety of places. Meeting drinking water standards would not be difficult but extra monitoring would be required.	Rating=Low. Same as on-site reuse/recycle.	Rating=Medium. Construction of pipeline would be difficult because of underground utilities, but not as complex as reuse/recycle. Meeting discharge limits would not be difficult.	Rating=Medium. Same as pumping to Murray Creek.	Rating=High. Construction of a recharge system would be easy. Meeting drinking water standards would not be difficult.

7677K

TABLE 4-10 (cont.)

EVALUATION OF DISPOSAL OPTIONS FOR COMBINED GROUNDWATER EXTRACTION ALONG I-5 AND NEAR SOURCE AREAS

Criteria	On-Site Storm Sewer	On-Site Reuse/Recycle	Off-Site Reuse/Recycle	Pumping to Murray Creek	Pumping to American Lake	Recharge
Ability to Operate, Maintain, Replace, and Monitor Components of the Alternative After Remedial Action is Complete.	N/A	N/A	N/A	N/A	N/A	N/A
Ability to Obtain Approvals from Other Offices and Agencies.	Rating=Medium. Ability to obtain NPDES permit is in question due to the high flowrate of treated groundwater when compared to the flowrate of Murray Creek.	Rating=High. Since treated groundwater would meet all drinking water standards, approvals should be easily obtained.	Rating=Low. Since treated groundwater would meet all drinking water standards, approvals should be easily obtained, but community would would most likely reject this option.	Rating=Medium. Ability to obtain NPDES permit is in question due to the high flowrate of treated groundwater when compared to the flowrate of Murray Creek.	Rating=High. Ability to obtain NPDES permit not in question because American Lake is a large lake. This disposal option is not constrained by the capacity of Murray Creek.	Rating=High. Obtaining approvals for recharge should not be difficult if water is treated to the drinking water standards.
Availability of RCRA Treatment, Storage and Disposal Services, and Capacity.	N/A	N/A	N/A	N/A	N/A	N/A
Requirements for, and Availability of Specific Equipment and Services.	Rating=Low. Availability of storm sewers is not known.	Rating=Low. Flowrate of the treated groundwater much higher than needed.	Rating=Low. Same as on-site reuse/recycle.	Rating=High. Piping equipment readily available.	Rating=High. Same as pumping to Murray Creek.	Rating=High. Recharge equipment readily available.
ROM COST (+50%, -30%):						
Capital	$209,000	$1,350,000	$1,796,000	$278,000	$1,086,000	$1,339,000
O&M	$35,000	$147,000	$199,000	$51,000	$212,000	$133,000
Present Worth	$539,000	$2,736,000	$3,672,000	$759,000	$3,084,000	$2,593,000

7677K

4.8.1 "No Remedial Actions" Alternatives

The No Action (G1) alternative is retained for further consideration in the detailed analysis. This option was not evaluated against effectiveness, implementability, and cost criteria because it is to be carried forward regardless of the outcome of the evaluation. This is to ensure that a full range of alternatives is retained for consideration during the detailed analysis.

4.8.2 Treatment and Disposal Process Options Assuming Groundwater Extraction Along I-5

A summary of the treatment option evaluation is shown on Table 4-11. Air stripping was selected as the groundwater treatment process. Carbon adsorption and ozonation/peroxidation will be slightly more effective than air stripping in protecting human health and in achieving a reduction of toxicity, mobility, and volume due to the emission of TCE to the atmosphere. However, air modeling has shown the TCE emissions to be well below the acceptable source impact level proposed by WDOE and TCE will also degrade in the atmosphere in about 10 days. Carbon adsorption and air stripping are more easily implemented than ozonation/peroxidation. Air stripping is the least expensive option, while carbon adsorption is the most expensive option. Air stripping is chosen as the treatment process option to be carried forward to detailed analysis because 1) it is easier to implement than ozonation/peroxidation, 2) it provides adequate protection of human health and the environment as shown by the results of the air modeling, and 3) it is much less expensive than competing options.

A summary of the disposal option evaluation is shown on Table 4-12. Recharge was chosen as the disposal option to be carried forward to the detailed analysis because of the substantial benefits obtained in terms of cleanup time and the ease of implementing this option. Pumping the treated groundwater to either Murray Creek or to an on-site storm sewer

TABLE 4-11

SUMMARY OF EVALUATION OF TREATMENT OPTIONS
FOR GROUNDWATER EXTRACTION ALONG I-5

Criteria	Air Stripping	Carbon Adsorption	Ozonation/ Peroxidation
EFFECTIVENESS:			
Short-term protection of human health and environment.	Medium	High	High
Long-Term protection of human health and environment.	High	High	High
Reduction of toxicity, mobility or volume.	Medium	High	High
IMPLEMENTABILITY:			
Ability to construct, reliably operate, and meet technology-specific regulations for process options until remedial action is complete.	High	High	Medium
Ability to operate, maintain, replace, and monitor components of the alternative after remedial action is complete.	N/A	N/A	N/A
Ability to obtain approvals from other offices and agencies.	High	High	High
Availability of RCRA treatment, storage, and disposal services and capacity.	N/A	High	N/A
Requirements for and availability of specific equipment and technical specialists.	High	High	Medium

TABLE 4-11 (cont.)

SUMMARY OF EVALUATION OF TREATMENT OPTIONS
FOR GROUNDWATER EXTRACTION ALONG I-5

Criteria	Air Stripping	Carbon Adsorption	Ozonation/ Peroxidation
COSTS:			
Capital	$244,000	$640,000	$794,000
O&M (Yearly)	$69,000	$140,000	$96,000
Present Worth (n=30, i=10)	$894,000	$1,960,000	$1,698,000

TABLE 4-12

SUMMARY OF EVALUATION OF DISPOSAL OPTIONS FOR GROUNDWATER EXTRACTION ALONG I-5

Criteria	On-Site Storm Sewer	On-Site Reuse/Recycle	Off-Site Reuse/Recycle	Pumping to Murray Creek	Pumping to American Lake	Recharge
EFFECTIVENESS:						
Short-Term Protection of Human Health and Environment.	Medium	Low	Low	Medium	Medium	High
Long-Term Protection of Human Health and Environment.	N/A	N/A	N/A	N/A	N/A	N/A
Reduction of Toxicity, Mobility or Volume.	N/A	N/A	N/A	N/A	N/A	N/A
IMPLEMENTABILITY:						
Ability to Construct, Reliably Operate, and Meet Technology-Specific Regulations for Process Options Until Remedial Action is Complete.	Medium	Low	Low	Medium	Medium	High
Ability to Operate, Maintain, Replace, and Monitor Components of the Alternative After Remedial Action is Complete.	N/A	N/A	N/A	N/A	N/A	N/A
Ability to Obtain Approvals from Other Offices and Agencies.	Medium	High	Low	Medium	High	High
Availability of RCRA Treatment, Storage and Disposal Services, and Capacity.	N/A	N/A	N/A	N/A	N/A	N/A

7677K

TABLE 4-12 (cont.)

SUMMARY OF EVALUATION OF DISPOSAL OPTIONS FOR GROUNDWATER EXTRACTION ALONG I-5

Criteria	On-Site Storm Sewer	On-Site Reuse/Recycle	Off-Site Reuse/Recycle	Pumping to Murray Creek	Pumping to American Lake	Recharge
Requirements for, and Availability of Specific Equipment and Services.	Low	Low	Low	High	High	High
ROM COST (+50%, -30%):						
Capital	$96,000	$662,000	$662,000	$94,000	$586,000	$762,000
O&M	$17,500	$73,500	$73,500	$17,500	$64,000	$77,000
Present Worth	$261,000	$1,355,000	$1,355,000	$259,000	$1,189,000	$1,488,000

7677K

was not chosen because of expected difficulties in obtaining a NPDES permit (treated groundwater flowrate is much greater than creek flowrate). The two reuse/recycle options were not chosen because there is no demonstrated need for the treated groundwater and reuse as a drinking water supply would not be acceptable to the community. Finally, all the discharge options including discharging to American Lake would not result in the benefit of a faster cleanup time. Using recharge as the disposal option will significantly reduce the time required to clean groundwater beneath Tillicum. Thus, recharge was chosen as the disposal option.

Air stripping and recharge are combined with deed restrictions to prevent use of contaminated groundwater on Fort Lewis property, administrative controls to prevent use of contaminated groundwater in Tillicum, and monitoring wells to monitor the groundwater contamination. This combination of process options forms alternative G2 which is a comprehensive alternative dealing with groundwater contamination.

4.8.3 Treatment and Disposal Process Options Assuming Groundwater Extraction Along I-5 and Near Source Areas

A summary of the treatment option evaluation is shown on Table 4-13. Air stripping was selected as the groundwater treatment process. Carbon adsorption and ozonation/peroxidation will be slightly more effective than air stripping in protecting human health and in achieving a reduction of toxicity, mobility, and volume due to the emission of TCE to the atmosphere. However, air modeling has shown TCE emission to be well below the acceptable source impact level proposed by WDOE and TCE will also degrade in the atmosphere in 10 days. Carbon adsorption and air stripping are more easily implemented than ozonation/peroxidation. Air stripping is the least expensive option, while carbon adsorption is the most expensive option. Air stripping is chosen as the treatment process option to be carried forward to detailed analysis because 1) it is easier to implement than

TABLE 4-13

SUMMARY OF EVALUATION OF TREATMENT OPTIONS FOR
COMBINED GROUNDWATER EXTRACTION ALONG I-5 AND NEAR SOURCE AREAS

Criteria	Air Stripping	Carbon Adsorption	Ozonation/ Peroxidation
EFFECTIVENESS:			
Short-term protection of human health and environment.	Medium	High	High
Long-Term protection of human health and environment.	High	High	High
Reduction of toxicity, mobility or volume.	Medium	High	High
IMPLEMENTABILITY:			
Ability to construct, reliably operate, and meet technology-specific regulations for process options until remedial action is complete.	High	High	Medium
Ability to operate, maintain, replace, and monitor components of the alternative after remedial action is complete.	N/A	N/A	N/A
Ability to obtain approvals from other offices and agencies.	High	High	High
Availability of RCRA treatment, storage, and disposal services and capacity.	N/A	High	N/A
Requirements for and availability of specific equipment and technical specialists.	High	High	Medium

TABLE 4-13 (Continued)

SUMMARY OF EVALUATION OF TREATMENT OPTIONS FOR
COMBINED GROUNDWATER EXTRACTION ALONG I-5 AND NEAR SOURCE AREAS

Criteria	Air Stripping	Carbon Adsorption	Ozonation/ Peroxidation
COSTS:			
Capital	$473,000	$1,250,000	$1,006,000
O&M (Yearly)	$138,000	$347,000	$192,000
Present Worth (n=30, i=10)	$1,773,000	$4,520,000	$2,816,000

ozonation/peroxidation, 2) it provides adequate protection of human health and the environment as shown by the results of the air modeling, and 3) it is much less expensive than competing options.

A summary of the disposal option evaluation is shown on Table 4-14. Recharge was chosen as the disposal option to be carried forward to the detailed analysis because of the substantial benefits obtained in terms of cleanup time and the ease of implementing this option. Pumping the treated groundwater to either Murray Creek or to an on-site storm sewer was not chosen because of expected difficulties in obtaining an NPDES permit (treated groundwater flowrate is much greater than creek flowrate). The two reuse/recycle options were not chosen because there is no demonstrated need for the treated groundwater and reuse as a drinking water supply would not be acceptable to the community. Finally, all the discharge options including discharging to American Lake would not result in the benefit of a faster cleanup time. Using recharge as the disposal option will significantly reduce the time required to clean the groundwater beneath Tillicum and the groundwater flowing through presumed source areas in the saturated zone. Thus, recharge was chosen as the disposal option.

Air stripping and recharge are combined with deed restrictions to prevent use of contaminated groundwater on Fort Lewis property, administrative controls to prevent use of contaminated groundwater in Tillicum, monitoring wells to monitor the groundwater contamination, and flow equalization. This combination of process options forms alternative G3 which is a comprehensive alternative dealing with groundwater contamination.

4.9 SUMMARY

Process options were evaluated against effectiveness, implementability, and cost criteria. The best process options for a given extraction scheme were selected and combined to form alternatives. The final candidate alternatives are summarized on Table 4-15. These alternatives will undergo detailed analysis in Section 6.0.

TABLE 4-14

SUMMARY OF EVALUATION OF DISPOSAL OPTIONS FOR COMBINED GROUNDWATER EXTRACTION ALONG I-5 AND NEAR SOURCE AREAS

Criteria	On-Site Storm Sewer	On-Site Reuse/Recycle	Off-Site Reuse/Recycle	Pumping to Murray Creek	Pumping to American Lake	Recharge
EFFECTIVENESS:						
Short-Term Protection of Human Health and Environment.	Medium	Low	Low	Medium	Medium	High
Long-Term Protection of Human Health and Environment.	N/A	N/A	N/A	N/A	N/A	N/A
Reduction of Toxicity, Mobility or Volume.	N/A	N/A	N/A	N/A	N/A	N/A
IMPLEMENTABILITY:						
Ability to Construct, Reliably Operate, and Meet Technology-Specific Regulations for Process Options Until Remedial Action is Complete.	High	Low	Low	Medium	Medium	High
Ability to Operate, Maintain, Replace, and Monitor Components of the Alternative After Remedial Action is Complete.	N/A	N/A	N/A	N/A	N/A	N/A
Ability to Obtain Approvals from Other Offices and Agencies.	Medium	High	Low	Medium	High	High
Availability of RCRA Treatment, Storage and Disposal Services, and Capacity.	N/A	N/A	N/A	N/A	N/A	N/A

7677K

TABLE 4-14 (cont.)

SUMMARY OF EVALUATION OF DISPOSAL OPTIONS FOR COMBINED GROUNDWATER EXTRACTION ALONG I-5 AND NEAR SOURCE AREAS

Criteria	On-Site Storm Sewer	On-Site Reuse/Recycle	Off-Site Reuse/Recycle	Pumping to Murray Creek	Pumping to American Lake	Recharge
Requirements for, and Availability of Specific Equipment and Services.	Low	Low	Low	High	High	High
ROM COST (+50%, -30%):						
Capital	$209,000	$1,350,000	$1,796,000	$278,000	$1,086,000	$1,339,000
O&M	$35,000	$147,000	$199,000	$199,000	$212,000	$133,000
Present Worth	$539,000	$2,736,000	$3,672,000	$759,000	$3,084,000	$2,593,000

7677K

TABLE 4-15

FINAL CANDIDATE ALTERNATIVES

Alternative #	Description of Alternative
G1	No Action Monitoring Wells
G2	Groundwater Extraction Along I-5 Air Stripping Recharge Deed Restrictions Administrative Controls Monitoring Wells Flow Equalization
G3	Groundwater Extraction Along I-5 and Near Source Areas Air Stripping Recharge Deed Restrictions Administrative Controls Monitoring Wells Flow Equalization

5.0 DETAILED EVALUATION OF SOIL SOURCE AREA REMEDIATION ALTERNATIVES

The remedial alternatives for the soil source area contamination at the East Gate Disposal Yard are described and evaluated in this chapter. The evaluation criteria are given in Section 5.1. The alternatives are described in Sections 5.2 to 5.7. The evaluations are summarized in Section 5.8. Detailed evaluations for each alternative are given in Appendix D.

5.1 EVALUATION CRITERIA

The Feasibility Study guidance (EPA 1988a) specifies that each alternative undergoing detailed analysis will be evaluated against nine criteria. These criteria are: short-term effectiveness; long-term effectiveness; reduction of toxicity, mobility, and volume; implementability; protection of human health and the environment; compliance with ARARs; support agency acceptance, community acceptance; and cost. Seven of the criteria have been further divided into subcriteria to allow a thorough analysis of the alternatives. The criteria and subcriteria are summarized on Table 5-1 and are discussed in more detail in the following sections.

Each of the remedial alternatives was given a rating of "high," "medium," or "low" for each of the evaluation criteria. The ratings were subjective and were based mainly on technical judgment.

5.1.1 Short-Term Effectiveness During Construction

This evaluation criterion addresses the effects of the alternative during the construction phase. Under this criterion, alternatives were evaluated with respect to their effects on human health and the environment. The following factors of this analysis criterion were addressed for each alternative:

TABLE 5-1

CRITERIA FOR DETAILED ANALYSIS OF ALTERNATIVES

Criteria	Subcriteria
Short-Term Effectiveness During Construction	o Protection of community during remedial actions.
	o Protection of workers during remedial actions.
	o Environmental impacts.
	o Time required to complete construction.
Long-Term Effectiveness	o Magnitude of remedial risk.
	o Adequacy of controls.
	o Reliability of controls.
	o Time until remedial action objectives are achieved.
Reduction of Toxicity, Mobility, and Volume	o Treatment process used and materials treated.
	o Amount of hazardous materials destroyed or treated.
	o Degree of expected reductions in toxicity, mobility, and volume.
	o Degree to which treatment is irreversible.
	o Type and quantity of residuals remaining after treatment.
Implementability	o Ability to construct and operate the technology.
	o Reliability of the technology.
	o Ease of undertaking additional remedial actions, if necessary.
	o Ability to monitor effectiveness of remedy.

TABLE 5-1 (Continued)

CRITERIA FOR DETAILED ANALYSIS OF ALTERNATIVES

Criteria	Subcriteria
Implementability (Continued)	o Ability to obtain approvals from other agencies.
	o Coordination with other agencies.
	o Availability of RCRA off-site treatment storage and disposal services and capacity.
	o Availability of necessary equipment and specialists.
	o Timing of new technology under consideration.
Protection of Human Health and the Environment	o How alternative provides human health and environmental protection.
Compliance with ARARs	o Compliance with contaminant-specific ARARs.
	o Compliance with action-specific ARARs.
	o Compliance with location-specific ARARs.
	o Compliance with other criteria, advisories, and guidance.
Support Agency Acceptance[1/]	
Community Acceptance[1/]	
Cost	o Capital costs.
	o Operating and maintenance costs.
	o Present worth cost (i=10 percent, n=30).

1/ Support agency acceptance and community acceptance will be addressed in the Record of the Decision and Responsiveness Summary.

- Protection of the community during remedial actions--This aspect of short-term effectiveness addresses any risk that results from implementation of the proposed remedial action, such as dust from excavation or air quality impacts from a stripping tower operation, that may affect human health.

- Protection of workers during remedial actions--This factor assesses threats that may be posed to workers and the effectiveness and reliability of protective measures that could be taken.

- Environmental impacts--This factor addresses the potential adverse environmental impacts that may result from the implementation of an alternative and evaluates how effective available mitigation measures would be in preventing or reducing the impacts.

- Time required to complete construction--This factor includes an estimate of the time to obtain construction permits, install the required equipment and perform any required testing.

5.1.2 Long-Term Effectiveness

The evaluation of alternatives using this criterion addresses the results of a remedial action in terms of the risk remaining at the site after response objectives have been met. The primary focus of this evaluation is the extent and effectiveness of the controls that may be required to manage the risk posed by treatment residuals and/or untreated wastes. The following components of the criterion should be addressed for each alternative:

- Magnitude of remaining risk--This factor assesses the residual risk remaining from untreated waste or treatment residuals at the conclusion of remedial activities (e.g., after source/soil containment and/or treatment are complete, or after groundwater plume management activities are concluded). The potential for this risk may be measured by numerical standards such as cancer risk levels or the volume or concentration of contaminants in waste,

media, or treatment residuals remaining on the site. The characteristics of the residuals should be considered to the degree that they remain hazardous, taking into account their toxicity, mobility, and propensity to bioaccumulate.

- Adequacy of controls--This factor assesses the adequacy and suitability of controls, if any, that are used to manage treatment residuals or untreated wastes that remain at the site. It may include an assessment of containment systems and institutional controls to determine if they are sufficient to ensure that any exposure to human and environmental receptors is within protective levels.

- Reliability of controls--This factor addresses the long-term reliability of management controls for providing continued protection from residuals. It includes the assessment of the potential need to replace technical components of the alternative, such as a cap, a slurry wall, or a treatment system; the potential exposure pathway; and the risks posed should the remedial action need replacement.

- Time required to achieve remedial response objectives--This factor includes an estimate of the time required to achieve protection for either the entire site or individual elements associated with specific site areas or threats.

5.1.3 Reduction of Toxicity, Mobility, and Volume

This evaluation criterion addresses the SARA preference for selecting remedial actions that employ treatment technologies that permanently and significantly reduce toxicity, mobility, or volume of the hazardous substances. This preference is satisfied when treatment is used to reduce the principal threats at a site through destruction of toxic contaminants, reduction of the total mass of toxic contaminants, irreversible reduction in contaminant mobility, or reduction of total volume of contaminated media.

This evaluation focuses on the following specific factors for a particular remedial alternative:

- The treatment processes, the remedies they will employ, and the materials they will treat.

- The amount of hazardous materials that will be destroyed or treated, including how principal threat(s) will be addressed.

- The degree of expected reduction in toxicity, mobility, or volume measured as a percentage of reduction (or order of magnitude).

- The degree to which the treatment will be irreversible.

- The type and quantity of treatment residuals that will remain following treatment.

5.1.4 Implementability

The implementability criterion addresses the technical and administrative feasibility of implementing an alternative and the availability of various services and materials required during its implementation. This criterion involves analysis of the following factors:

- Technical feasibility

  - Construction and operation--This relates to the technical difficulties and unknowns associated with a technology. This was initially identified for specific technologies during the development and screening of alternatives and is addressed again in the detailed analysis for the alternative as a whole.

  - Reliability of technology--This focuses on the ability of a technology to consistently meet specified process efficiencies or performance goals. The likelihood that technical problems will lead to schedule delays should be considered as well.

- Ease of undertaking additional remedial action--This includes a discussion of what, if any, future remedial actions may need to be undertaken and how difficult it would be to implement such additional actions.

- Monitoring considerations--This addresses the ability to monitor the effectiveness of the remedy and includes an evaluation of the risks of exposure should monitoring be insufficient to detect a system failure.

o Administrative feasibility

- Activities needed to coordinate with other offices and agencies (e.g., obtaining permits for off-site activities or rights-of-way for construction).

o Availability of services and materials

- Availability of adequate off-site RCRA treatment, storage capacity, and disposal services.

- Availability of necessary equipment and specialists and provisions to ensure any necessary additional resources.

- Timing of the availability of innovative technologies that would be required for the remediation.

- Availability of services and materials, plus the potential for obtaining competitive bids, which may be particularly important for innovative technologies.

5.1.5 Protection of Human Health and the Environment

This evaluation criterion provides a final check to assess whether each alternative meets the requirement that it is protective of human health and the environment. The overall assessment of protection is based on

a composite of factors assessed under other evaluation criteria, especially long-term effectiveness and permanence, short-term effectiveness, and compliance with ARARs.

Evaluation of the overall protectiveness of an alternative focused on how a specific alternative achieves protection over time and how site risks are reduced. The analysis indicated how each source of contamination is to be eliminated, reduced, or controlled for each alternative.

5.1.6 Compliance with ARARs

This evaluation criterion is used to determine how each alternative complies with applicable or relevant and appropriate federal and state requirements, as defined in CERCLA Section 121. There are three general categories of ARARs: chemical-, location-, and action-specific. The detailed analysis summarizes which requirements are applicable or relevant and appropriate to an alternative and describes how the alternative meets these requirements. When an ARAR is not met, the basis for justifying one of the six waivers allowed under CERCLA (see Section 1.2.1.1) should be discussed.

The following was addressed for each alternative during the detailed analysis of ARARs:

- Compliance with chemical-specific ARARs (e.g., MCLs)--This factor addresses whether the ARARs can be met, and if not, whether a waiver may be appropriate.

- Compliance with action-specific ARARs (e.g., air emission standards)--It must be determined whether ARARs can be met or waived.

- Compliance with location-specific ARARs (e.g., preservation of historic sites)--As with other ARAR-related factors, this involves

a consideration of whether the ARARs can be met or whether a waiver is appropriate.

- Compliance with appropriate criteria, advisories, and guidances--This involves consideration of how well the alternative meets Federal and local guidelines that are not promulgated regulations but have been identified by lead and support agencies as necessary to ensure protection of human health and the environment and are appropriate for the circumstances of the site.

5.1.7 Support Agency Acceptance and Community Acceptance

This criterion was not evaluated in the Feasibility Study, because there has not yet been any opportunity for review of the remedial alternatives and comment by local agencies and the public. Support agency acceptance and community acceptance will be discussed in the Record of Decision and the Responsiveness Summary.

5.1.8 Cost

Rough order of magnitude (ROM) capital, annual (operating and maintenance), and present worth costs for each alternative are calculated and compared. The accuracy of all costs are +50 percent to -30 percent. Capital costs consist of direct and indirect costs. Direct costs include expenditures for equipment, labor, and materials necessary to install remedial actions. Indirect capital costs include expenditures for engineering, financial, and other services that are not part of actual installation activities but are required to complete the installation of remedial alternatives. Annual costs are post-construction costs necessary to ensure effectiveness of the remedial action.

Present worth costs are calculated to evaluate expenditures that occur over different time periods, by discounting all future costs and annual costs to a common base year. The present worth calculations are intended to be used only to compare costs between the various

alternatives. It is not intended to substitute for detailed economic analyses and cost optimization studies. In accordance with Section 7.2 of the RI/FS Guidance Documents (EPA 1985a), present worth costs were calculated for a 30-year period and a 10 percent discount (after inflation). In addition, a second present worth cost was calculated for a 30 year period and a 4 percent discount (after inflation).

5.2 DESCRIPTION OF THE "NO ACTION" ALTERNATIVE (S1)

This section describes the "No Action" alternative, which would implement neither engineering nor administrative controls. The EPA guidance on feasibility studies requires that the No Action alternative be included in the detailed evaluations as a comparison with the other alternatives that specify remedial actions. The alternative is described below.

The limited items that would constitute the "No Action" alternative are as follows:

- Four existing groundwater monitoring wells, located upgradient and downgradient of the East Gate Disposal Yard, would be monitored.

- No engineering or administrative actions would be taken by the Army, other than the periodic groundwater monitoring described above.

5.2.1 Residual Risk

Since this alternative does not change contaminant concentrations or exposure conditions, there will be no change from the risks predicted in the baseline risk assessment (see Tables 1-6 and 1-7). The main pathways associated with exposure to soil contamination are soil ingestion, inhalation of particulates, dermal contact, and soil vapor

inhalation. Two pathways, soil ingestion and dermal contact, were found to contribute significantly to the human risk. The cumulative cancer risk for on-post workers exposed to the trichloroethylene ranges from 5.1×10^{-9} to 1.1×10^{-6}. The cumulative cancer risk for on-post workers exposed to tetrachloroethylene ranges from 1.5×10^{-7} to 2.4×10^{-7}. The Hazard Index for exposure to 1,2-dichloroethylene ranges from 9.0×10^{-6} to 1.3×10^{-2} for adults.

5.2.2 Estimated Cost

The only costs associated with the "No Action" alternative are the costs for the semi-annual groundwater monitoring. Assuming that four wells would be sampled semi-annually at a cost of $310 per well, the annual groundwater monitoring cost would be $2,500 per year.

5.3 DESCRIPTION OF "INSTITUTIONAL CONTROLS" ALTERNATIVE (S2)

This section describes the "Institutional Controls" alternative, which implement administrative controls and access controls. The current potential for direct exposure to the contaminated soil in the East Gate Disposal Yard by either on-site personnel or the general public is minimal since there is no indication that the contaminated soil will migrate away from the disposal trenches or contribute to continued contamination of the unconfined upper groundwater aquifer.

For this alternative, the Army and the local agencies would agree to place deed restrictions on the Logistics Center property that would forbid any construction activities at the East Gate Disposal Yard involving excavating into potentially contaminated soil. This alternative would require implementing the following steps:

- The Army and the Pierce County Planning Department may apply a deed restriction to the federal deed for the Fort Lewis property. The deed restriction would include a legal description of the location

of the East Gate Disposal Yard. The deed restriction would prohibit any construction activities at the site that would cause excavation into the contaminated soil.

- The Army will construct a security fence and restrict all access into and near the fenced area.

- The Army will restrict soldiers from training in the area.

- Future garrison maps will show the site as a restricted area.

- Groundwater monitoring at four wells (a two-well cluster upgradient and a two-well cluster downgradient of the disposal yard) would be performed. The wells would be monitored for contamination, to see whether the rate of infiltration from the saturated soils to the groundwater was unexpectedly increasing.

5.3.1 Residual Risk

Risks from soil contaminants once soil remediation alternative (S2) is implemented were evaluated for on-site workers and for off-site populations following remediation. The exposure pathways evaluated for the S2 alternative were vapor inhalation, soil ingestion and soil particulate inhalation. The results of these analyses are summarized in Table 5-2 below, while the methodological approach, assumptions and contaminant-specific risks are presented in Appendix H.

TABLE 5-2

RESIDUAL POST-REMEDIATION RISKS
FROM EXPOSURE TO CONTAMINATED SOILS UNDER
THE S2 ALTERNATIVE

Exposed Population[1/]	Cancer	Hazard Index
On-Site Workers (4)	1.1×10^{-6}	4.6×10^{-4}
Off-Site Residents (5)	2.6×10^{-7}	7.2×10^{-6}

1/ Number in parentheses indicates the exposure scenario (see Appendix H).

5.3.2 Estimated Cost

The estimated administration cost for the "Institutional Controls" alternative is $65,000, divided as follows:

Boundary Survey and Development of Legal Description of East Gate Disposal Yard	$10,000
Establish Deed Restriction with Pierce County Planning Dept.	$ 5,000
Procure subcontractor for groundwater monitoring program.	$ 5,000
Security fence/vehicle barriers	$45,000

Semi-annual groundwater monitoring for TCE at four wells would cost roughly $2,500 per year.

5.4 DESCRIPTION OF CONCRETE SURFACE CAP (S3)

For this remedial alternative, a concrete cap is constructed over the area of soil contaminated with the TCE and DCE above the 10^{-6} risk level. The cap seals the contamination from the public and minimizes or eliminates the mobility of contaminants towards the groundwater. The concrete cap is a soil remediation alternative only. It is designed to meet the two remedial objectives for contaminated soil; these are:

- Protection of onsite workers and the public from direct contact with the contaminated soil

- Minimization of contaminant transport into the groundwater caused by infiltration of surface water

The description of this alternative includes required actions prior to installation, the design and implementation of the surface cap, measures to ensure public protection and worker safety, and estimated cost.

5.4.1 Pre-Installation Activities

The exact location of material contaminated with TCE above the 10^{-6} risk level must be determined before it can be capped. A detailed soil gas survey and Ground Penetrating Radar (GPR) Survey of the East Gate Disposal Yard will be conducted to locate the contaminated material. Additional soil borings will be required to confirm the results of the soil gas survey and establish the degree of contamination.

5.4.2 Action-Specific ARARs

No special licenses or permits will be required prior to installation of the concrete cap. Although there are ARARs which apply to the contaminated soil in the ground in its present unremediated condition, ARARs do not apply to the action of constructing a surface cap.

5.4.3 Surface Cap Design

A profile of the cap and an area diagram corresponding to the estimated maximum area of contamination are presented in Figure 5-1. The estimate of the areal extent of contamination presented in Sections 1.5 and 3.2 was revised based on further interpretation of aerial photographs of the East Gate Disposal Yard. A photograph taken in 1951 shows long, narrow scraped regions clustered in groups, which are assumed to be waste trenches. Another photograph dated 1960 reveals an open trench in use in addition to the scraped areas. The trench areas were scale measured on the photographs and a margin of safety added to the estimated dimensions to obtain a maximum cap area of 304,250 square feet. The actual area determined to be in need of capping may likely be different from this estimate.

The installed area of the concrete caps will depend on the findings of the soil gas survey and GPR survey. A detailed design with specifications will be developed once the exact area of contaminated soil in need of capping has been determined. All contaminated soil will be capped in as few sections as possible without covering a large expanse of noncontaminated area. The cap will be designed with a 1 percent slope so rain water will drain off into the perimeter drainage ditches. The cap will consist of a layer of regraded fill over the contaminated soil, then a base layer, and topped with a 4 to 6 inch layer of Portland Concrete.

Construction of the cap will consist of initially clearing the areas to be capped followed by regrading of the site to obtain the desired 1 percent slope. Fill material for grading will be obtained from adjacent areas so none is expected to be hauled to the site by truck. Drainage ditches will be installed around the cap or caps a distance of 10 feet from the edge. Pouring and casting of the concrete will take approximately 3 to 6 months depending on the area of contamination. The concrete will be cast in multiple sections each of about 500 square

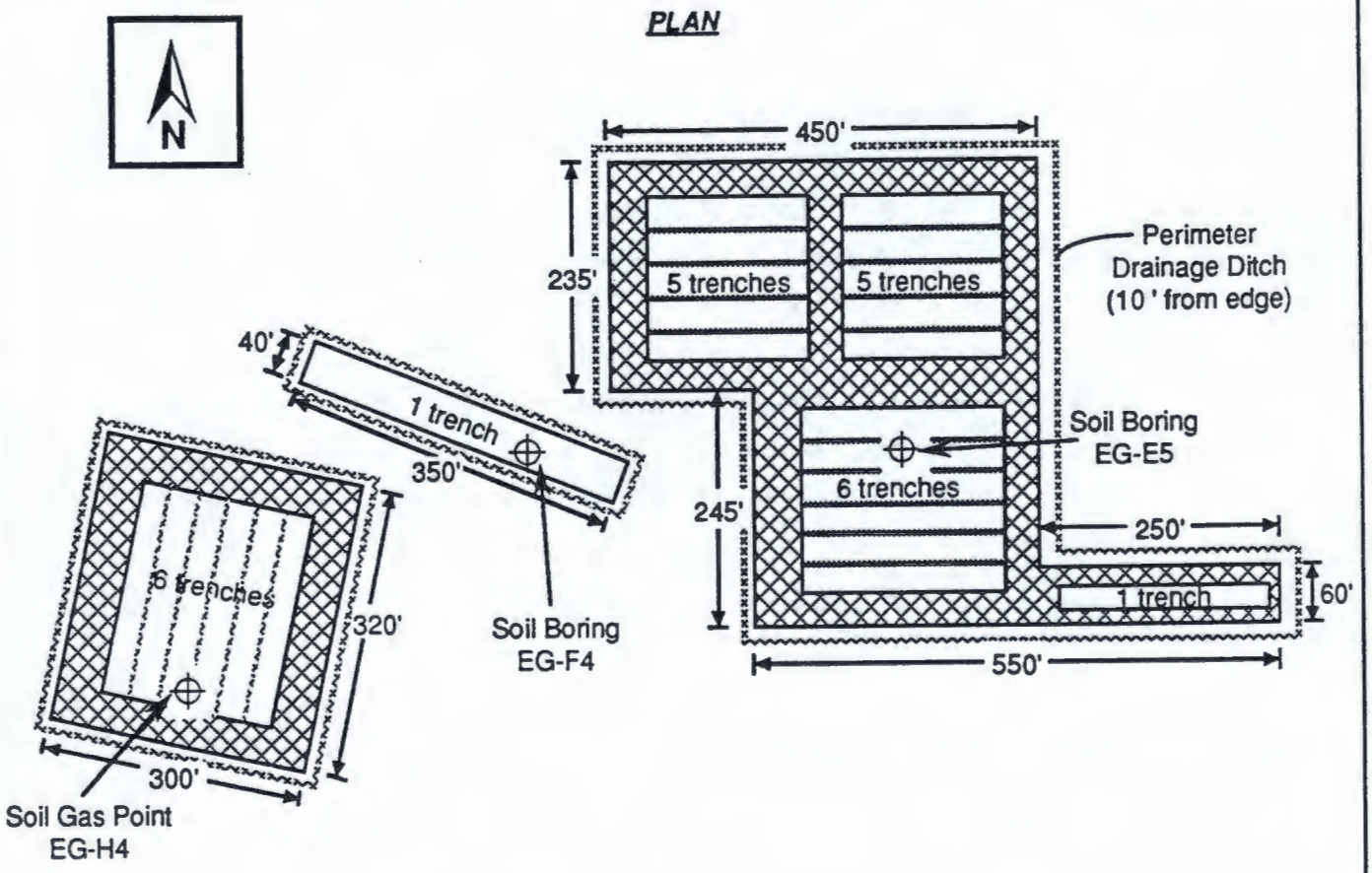

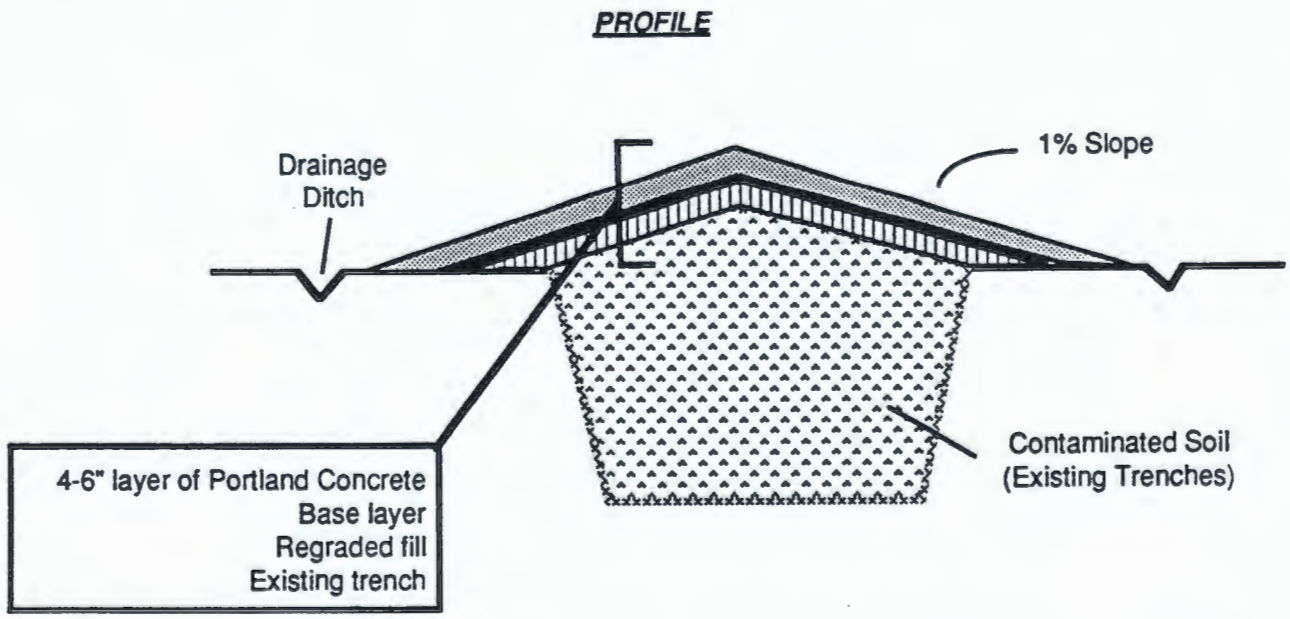

FORT LEWIS LOGISTICS CENTER
REMEDIAL INVESTIGATION / FEASIBILITY STUDY

FIGURE 5-1
CONCRETE CAP REMEDIATION
ALTERNATIVE DIAGRAM

Section No.
Revision No.
Revision Date:
Page of

envirosphere company
In Association with
SHANNON & WILSON

feet and water stops will be installed between sections. All technology required for constructing a cap is well-proven, making this alternative easy to implement.

5.4.4 Public Protection and Worker Safety During Construction

Installation of a concrete cap will not pose any dangers to the public. Emissions of TCE vapors from the East Gate Disposal Yard are assumed to not be a problem. Cap construction will not disturb the subsurface soil where contamination is still present so no release of vapors is expected. Fugitive dust generated from regrading of the landfill site could impact the public off-site, but appropriate measures for dust suppression will mitigate any risks presented by dust. Increased traffic, particularly cement truck traffic, will not be significant to area highways relative to the current volume of traffic.

Worker safety will be ensured through use of air monitoring and personal protective equipment, such as coveralls, gloves, and respirators. The surface grading will be performed by a certified contractor who has been properly trained to minimize health risks, and has experience in remediation of hazardous waste sites. A specialist in health and safety will be on-site during all operations that might involve direct contact with the soil. As stated previously, TCE vapors are not expected to volatilize from the surface soils and, since the subsurface soil will remain undisturbed, emissions of contaminant vapors will not occur. Dust suppression measures will minimize this impact to workers.

5.4.5 Residual Risk

The main pathways associated with exposure to soil contamination are soil ingestion, inhalation of particulates, dermal contact, and soil vapor inhalation. Only two pathways, soil ingestion and dermal contact, were found to contribute significantly to the risk. The maximum concentration that workers and children will be exposed to once the site is capped is 60 mg/kg for TCE and 12 mg/kg for PCE because

more highly contaminated soils will be capped. The cancer risk for on-post workers and children exposed to this maximum trichloroethylene concentration is 1×10^{-6}. The hazard index for exposure to the maximum 1,2-dichloroethylene concentration is 2.19×10^{-2} for adults and children. The cancer risk for on-post workers and children exposed to the maximum concentration of tetrachloroethylene is 9.8×10^{-7}.

5.4.6 Estimated Remediation Cost

The estimated costs for a concrete cap are presented in Table 5-3. All costs are in January 1989 dollars as indicated. The costs are highly dependent on the area of the cap, and are based on the maximum surface area likely to be capped. Unit costs for preparation, construction, and maintenance of the cap were obtained from EPA manuals on costs for remedial technologies (EPA 1985b, Environmental Law Institute 1987). The estimated costs for pre-installation site surveys and engineering are based on Ebasco Environmental's experience during the performance of similar field studies.

All capital costs except the preliminary site surveys are directly dependent on the area of the cap. However, the operating costs will vary only slightly with cap area since the largest cost item, groundwater monitoring, is affected only by the number of samples collected and analyzed. The annual operating cost will continue for the life of the remedial alternative.

5.5 EXCAVATE AND SHIP TO OFF-SITE RCRA LANDFILL (S4)

For this alternative the soil contaminated with TCE and DCE above the 10^{-6} risk level is excavated and shipped by truck to a licensed RCRA disposal facility. For cost estimating purposes it is assumed that the excavated material will be shipped to the Waste Management Incorporated disposal facility in Arlington, Oregon. The description of the alternative is given in the following sections.

TABLE 5-3

ROUGH ORDER OF MAGNITUDE COST FOR CONCRETE CAP (+50%, -30%)
(Capped Area = 304,250 sq. ft.)

Item	Cost[1]
Capital Costs	
Site Clearing[2]	$8,400
Regrading[3]	31,400
Perimeter Ditches[3]	13,200
Portland Cement Cap [3]	569,000
Subtotal	622,000
Engineering (Add 10%)	62,000
Subtotal	684,000
Contingency (Add 20%)	137,000
Preliminary Soil Gas and GPR Surveys	100,000
Total	$921,000
Operating Costs	
Groundwater Monitoring (4 wells sampled twice per year @ $310/sample)	2,500
Inspection, Maintenance, and Repairs[3]	2,500
Total	$ 5,000
Present Worth	
30 year project life at a 10% discount rate	$970,000
30 year project life at a 4% discount rate	$1,007,000

1/ All costs given in January 1989 dollars.

2/ Source: EPA Remedial Action Handbook (EPA 1985b).

3/ Source: EPA Compendium of Costs of Remedial Technologies (Environmental Law Institute 1987).

5.5.1 Action-Specific ARARs

As described in Section 1.6, implementation of this alternative is subject to the following regulations:

- EPA Land Ban - The Logistics Center will be subject to the EPA Land Ban. The contaminated soil contains halogenated solvents that, after November 1990, will be banned from land disposal unless the soil is pretreated using Best Demonstrated Available Technology (40 CFR 268). Disposal at a RCRA-approved facility is allowed before November 1990.

- Hazardous Waste Manifesting - The haul trucks must be properly placarded and the waste shipments must be accompanied by appropriate hazardous waste manifests.

- Hazardous Waste Generator Permit - The Washington Department of Ecology is the lead agency for issuing hazardous waste generator permits under the State regulations (WAC 173-303). For the Logistics Center excavations, the Corps must submit the equivalent of the one-time generator permit application.

  OSHA Worker Exposure Limits - The on-site excavation workers must be protected from exposure to TCE vapors, according to the OSHA regulations.

5.5.2 Pre-Excavation Activities

The location of material contaminated with TCE above 10^{-6} risk level must be determined before it can be excavated. It is assumed that a detailed soil gas survey and GPR survey of the East Gate Disposal Yard would be performed to locate the areas of contaminated soil presumed to be in the historical disposal trenches. Additional soil borings would be required to confirm the results of the soil gas survey. For cost

calculations it is assumed that two soil borings would be taken in each of the 24 trenches and that two soil samples from each boring would be analyzed for volatile organics.

A detailed excavation plan must be developed before the soil removal can begin. The excavation plan would be used to solicit bids from remediation contractors to perform the work. The plan would describe the configuration and quantity of the contaminated material, the methods to be used to excavate the soil, the methods for loading the haul trucks, and the requirements for personnel protection and health and safety monitoring.

The equivalent of a WDOE Hazardous Waste Generator Permit license application should be submitted to WDOE to inform them of the composition and quantity of waste to be excavated. RCRA Waste Characterization forms must be submitted to the waste disposal facility before shipping to that facility can begin.

5.5.3 Excavation and Shipping

It is assumed that the contaminated soil was originally backfilled into trenches that were dug with a bulldozer. The results of the Remedial Investigation showed that the contamination in the trenches probably extends downward to the groundwater table but not below it. For this remedial alternative it is assumed that the contaminated soil would be excavated down to the 10-foot deep water table using a combination of conventional construction equipment (backhoes, dozers, etc.) and temporarily stockpiled before loading and shipping. All excavation work would be performed by specialists experienced in hazardous waste work. The workers would wear protective clothing, and all work would be overseen by a Certified Industrial Hygienist. As described in Section 1.5, the assumed soil volume is roughly 7,000 cubic yards. Assuming a nominal 300 cy/day excavation rate, roughly 25 working days would be required to remove the 7,000 cy of contaminated soil.

The stockpiled soil would be loaded into 20-ton soil trucks and hauled to the disposal facility. The truck beds would be lined with plastic sheeting to avoid contaminating the trucks. An experienced hazardous waste shipping firm would supply the trucks and drivers.

After the contaminated soil was removed from the trenches, soil samples from the trench bottom and sides would be taken to confirm that the residual TCE concentration is less than 60 mg/kg (10^{-6} risk level). The clean trenches would then be backfilled with clean soil that is either obtained from an on-site quarry or imported from an outside contractor.

5.5.4 RCRA Disposal Facility

As described in Section 1.5, the excavated soil is assumed to contain halogenated solvents at concentrations exceeding the WDOE limit for Dangerous Wastes according to WAC 173-303-102. It is therefore a Dangerous Waste that cannot be disposed of to a conventional sanitary landfill but must be disposed of to a licensed RCRA disposal facility. To be licensed that facility must be in compliance with the requirements of 40 CFR 264 Subpart F, which requires double liners, leachate monitoring and collection and groundwater monitoring. In addition, CERCLA wastes must be disposed of in such a manner as to be in compliance with the Off-Site CERCLA Policy (OSWER Directive 9330.2-5). The following RCRA disposal facilities could be used for the Logistics Center soils:

- Waste Management Incorporated landfill at Arlington, Oregon.
- Envirosafe Incorporated landfill at Mountain Home, Idaho.
- Waste Management Incorporated landfill in southern California.

Other RCRA landfills are available, but they are assumed to be too far from Fort Lewis to allow cost effective shipping and disposal. For cost purposes, it is assumed that the soil would be taken to the Arlington, Oregon facility.

5.5.5 Public Protection and Worker Safety During Excavation and Shipping

A specialized hazardous waste disposal firm would be contracted to perform the excavation and shipping operations. Worker safety would be ensured through use of air monitoring and appropriate personal protective gear such as disposable coveralls, gloves and respirators. They would be properly trained to minimize their health risks during the soil excavation. A health and safety specialist would be on-site during all remediation activities. The soil hauling would be performed by an experienced hazardous waste shipping firm.

Off-site persons would not be exposed to significant TCE vapor concentrations that would result from volatilization from the excavated soil. The estimated maximum annual average TCE concentration in the ambient air at the Logistics Center boundary that would result from soil excavation at the East Gate Disposal Yard is 0.28 ug/m^3. This is well below the acceptable source impact level (ASIL) of 0.8 ug/m^3 proposed by WDOE in the draft air toxics regulations (WAC 173-460). Although these draft regulations are not considered an ARAR, they were used as guidance in developing the alternatives. The estimated TCE concentrations around the excavation site are shown in Figure 5-2. The maximum TCE concentration during excavation was estimated using the following worst-case assumptions:

- The excavated soil contains 240 mg/kg of TCE. The excavation rate is 300 cy/day with an assumed density of one ton per cubic yard. It is assumed that all of the TCE in the excavated soil volatilizes and is emitted to the atmosphere. This assumption results in a conservatively high TCE emission rate because in reality not all of the TCE in the soil is expected to volatilize. Using those worst case assumptions, the daily TCE emission rate during the 25 day excavation period is roughly 144 pounds per day.

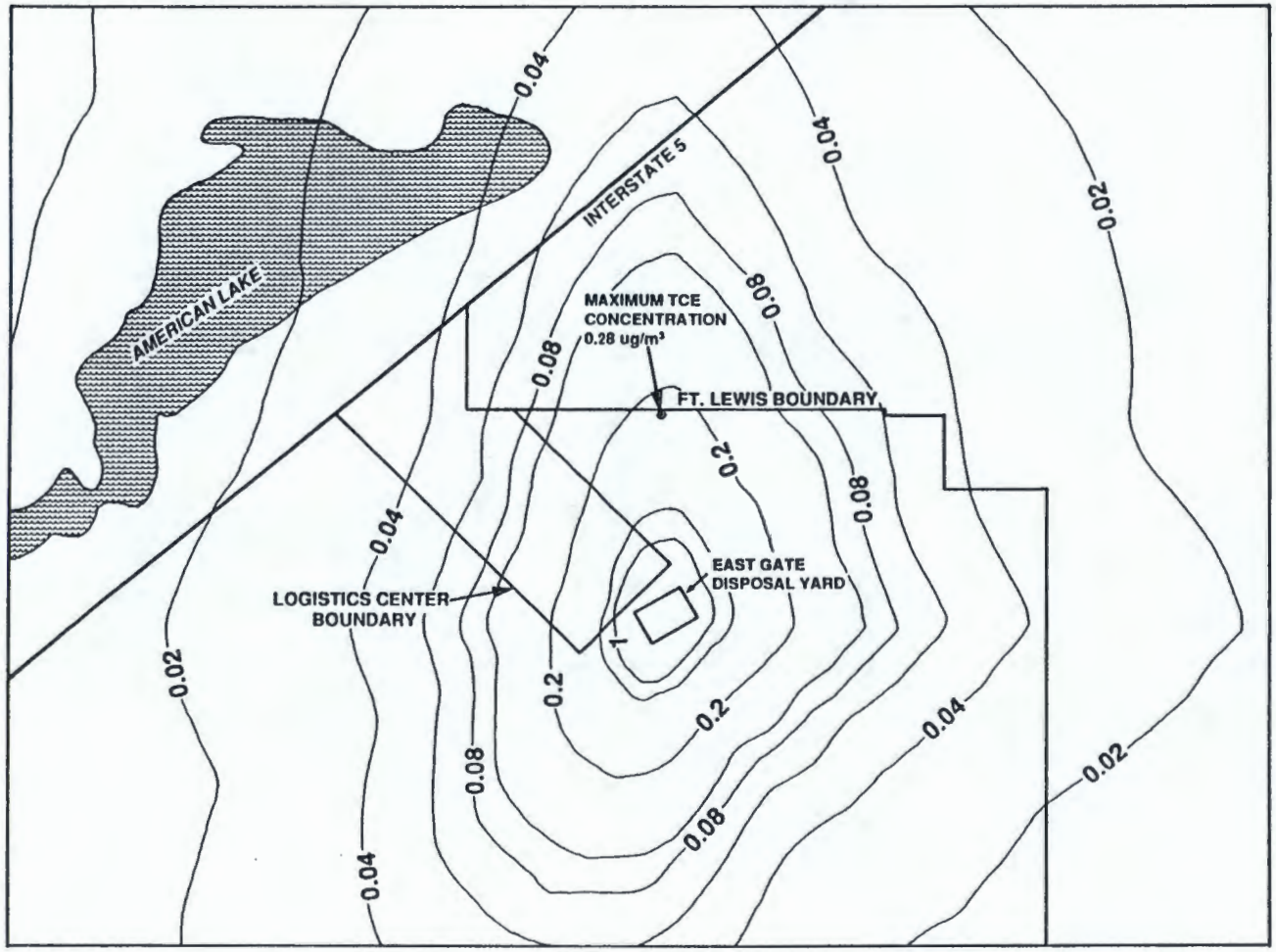

FORT LEWIS LOGISTICS CENTER
REMEDIAL INVESTIGATION / FEASIBILITY STUDY

FIGURE 5 - 2
ESTIMATED ANNUAL AVERAGE TCE IMPACTS (IN ug/m³) DURING EAST GATE DISPOSAL YARD EXCAVATION

Section No:
Revision No:
Revision Date:
Page of

envirosphere company
In association with
SHANNON & WILSON

- The ambient TCE concentrations downwind of the excavation site were estimated using the EPA-approved Industrial Source Complex (ISC-LT) computer model. The excavation site was modeled as a 300,000 ft^2 ground level area source of square shape. Annual average wind data and mixing height data from McChord AFB were used as input to the model.

As shown in Figure 5-2, the maximum daily TCE concentration would occur at the northern boundary of the Logistics Center.

An estimated 20 trucks per day would be dispatched for roughly 25 working days. This minor truck volume would be insignificant compared to the normal traffic flows along the interstate freeway system that the drivers would follow to the disposal facility.

5.5.6 Residual Risk

The main pathways associated with exposure to soil contamination are soil ingestion, inhalation of particulates, dermal contact, and soil vapor inhalation. Only two pathways, soil ingestion and dermal contact, were found to contribute significantly to the risk. The maximum concentration that workers and children will be exposed to once contaminated soils are excavated and shipped to a RCRA landfill is 60 mg/kg. The cancer risk for on-post workers and children exposed to this maximum concentration is 1×10^{-6}. The cancer risk for exposure to the maximum concentration of tetrachloroethylene is 9.8×10^{-7}. The hazard index for exposure to the maximum 1,2-dichloroethylene concentration is 2.19×10^{-2} for adults and children.

5.5.7 Estimated Remediation Cost

The estimated remediation costs are shown in Table 5-4. The total estimated ROM cost is $2,250,000. All costs are in January 1989 dollars. The unit costs for excavation and shipping are based on the costs for similar projects in the Tacoma area. Disposal costs are based on recent cost quotes from the Waste Management Incorporated

TABLE 5-4

ESTIMATED ROUGH ORDER OF MAGNITUDE COSTS (+50%, -30%)
FOR SOIL EXCAVATION AND DISPOSAL

Item	Quantity	Unit Cost	Subtotal Cost
Soil Gas Survey and Soil Borings	1	Lump sum	$100,000
Excavation Plan and Contractor Procurement	1	Lump sum	100,000
WDOE Waste Generator Permits	1	Lump sum	10,000
Soil Excavation	7,000 cy	$25/cy	175,000
Confirmatory Sampling	100 samples	$200/sample	20,000
Air Monitoring During Excavation	30 days	$1,000/day	30,000
Soil Shipping to Arlington, Ore.	7,000 tons	$40/ton	280,000
Soil Disposal at Arlington, Ore.	7,000 tons	$150/ton	1,050,000
Trench Backfilling	7,000 cy	$5.00/cy	35,000
SUBTOTAL			$1,800,000
25% Contingency			450,000
TOTAL ESTIMATED COST			$2,250,000

facility at Arlington, Oregon. The estimated costs for the pre-excavation surveys and engineering are based on Ebasco Environmental's experience gained during the performance of similar field work.

All of the costs associated with this project are considered to be one time capital costs. The excavation, shipping and disposal must be complete before November 1990, after which disposal of the untreated soil into landfills would be prohibited. No additional monitoring or maintenance of the excavation site would be required after the excavation is complete so there are no ongoing annual expenses.

5.6 EXCAVATE AND ABOVE-GROUND SOIL AERATION (S5)

This alternative involves the excavation of soil contaminated with TCE and DCE above the 10^{-6} risk level and on-site treatment by above-ground low temperature thermal stripping. The treated soil is then returned to the excavated on-site trenches. The description of the alternative and the evaluation are given in the following sections.

5.6.1 Action-Specific ARARs

As described in Section 1.6, implementation of this alternative is subject to the following regulations:

- Land Disposal Restrictions--The excavation of contaminated soils, treatment, and reuse as fill constitutes placement according to RCRA. If placement occurs, concentrations in the Toxicity Characteristic Leaching Procedure (TCLP) extract from the soils must be less than the treatment levels specified in Table 1-6.

- Hazardous Waste Manifesting--Transportation of any spent carbon and liquid hazardous waste (i.e., collected organics in water) must comply with all applicable hazardous waste manifesting requirements.

- Hazardous Waste Generator Permit--The Washington Department of Ecology (WDOE) is the lead agency for issuing hazardous waste generator permits under the State regulations (WAC 173-303). For the Logistics Center's generation of spent carbon and liquid waste, the Army must submit the equivalent of the one-time generator permit application.

- WDOE Air Quality Regulations--All substantive portions of General Regulations for Air Pllution Sources (WAC 173-400) and the Ambient Air Quality Standard for Particulate Matter (WAC 173-140) must be met in order to obtain approvals.

- OSHA Workplace Limits--Limits for TCE concentrations in the workplace are implemented by the Occupational Safety and Health Administration (OSHA). These limits will apply to excavation and treatment activities for the contaminated soils at the Logistics Center.

5.6.2 Pre-Excavation Activities

The location of material contaminated with TCE above 10^{-6} risk level must be determined before it can be excavated. It is assumed that a detailed soil gas survey and GPR survey of the East Gate Disposal Yard would be performed to locate the areas of contaminated soil presumed to be in the historical disposal trenches. Additional soil borings would be required to confirm the results of the soil gas survey. For cost calculations it is assumed that two soil borings would be taken in each of the 24 trenches and that two soil samples from each boring would be analyzed for volatile organics.

Once the location of the contamination has been confirmed, a pilot-scale study would be performed. The purpose of the pilot-scale study would be to determine the effectiveness of the above-ground soil aeration system for the contaminated soils at the site. In addition, engineering information needed for detailed design would be obtained.

A detailed excavation plan must be developed before full-scale soil removal can begin. The excavation plan would be used to solicit bids from remediation contractors to perform the work. The plan would describe the configuration and quantity of the contaminated material, the methods to be used to excavate the soil, the methods for loading the haul trucks, and the requirements for personnel protection and health and safety monitoring.

5.6.3 Excavation

It is assumed that the contaminated soil was originally backfilled into bulldozed trenches. Results of the Remedial Investigation showed that the contamination in the trenches probably extends downward to the groundwater table, but not below it. For this remedial alternative, it is assumed that the contaminated soil would be excavated down to the 10-foot deep water table using a combination of conventional construction equipment (i.e., backhoes, bulldozers, etc.) and temporarily stockpiled prior to treatment. As described in Section 1.5, the assumed soil volume is roughly 7,000 cubic yards (cy). Assuming a nominal 300 cy/day excavation rate, roughly 25 working days would be required to remove and temporarily stockpile the contaminated soil. All work will be performed by trained specialists meeting applicable Health and Safety requirements.

The stockpiled soil will be screened to ensure that the solid feed to the soil aeration treatment system is less than 1.25 inches in size. Screened soil can then be fed into the treatment system as needed. The oversize material will be only lightly contaminated. It will be temporarily stockpiled and used later for backfill material.

After the contaminated soil is removed from the trenches, confirmatory soil samples from the bottom and sides of the trench would be collected and analyzed to ensure that the residual TCE concentration is less than the 60 mg/kg (10^{-6} risk level).

5.6.4 Treatment Process

A few vendors offer packaged above-ground soil aeration systems. The different systems differ slightly in their design. Some systems use small rotary kilns to agitate the soil during aeration, while others use rotary auger mixers to do the agitation. Similarly, either an activated carbon scrubber or an afterburner can be used to remove the stripped organics from the air stream. For this FS, it was assumed that an available packaged system that uses a rotary kiln and an activated carbon scrubber is used for the soil aeration. The assumed treatment system is described in this section.

Following excavation and solids handling activities, contaminated soil will be fed into a commercially available mobile thermal desorption system. The system is shown in Figure 5-3. A detailed process flow diagram is given in Figure 5-4. This system employs a process in which solids with organic contamination are heated, thereby driving off the soil moisture and organic contaminants and producing a dry solid containing acceptably low amounts of the organic residue.

The soil aeration system can be designed to process contaminated soils through a pug mill or rotary drum equipped with heat transfer surfaces. An induced airflow conveys the desorbed volatile organic/air mixture through a carbon adsorption unit for the collection and destruction of organics. The airstream is then discharged through a stack. Process residuals consist of processed soil, spent carbon, and stack gases (EPA 1988c).

The mobile thermal adsorption system should be able to treat between 100 to 150 tons of contaminated soil per day. The mobile unit will consist of seven skids of equipment and two treatment trucks. Upon mobilization and testing, the system should be fully operable within six weeks. Based on the total volume of contaminated soil to be

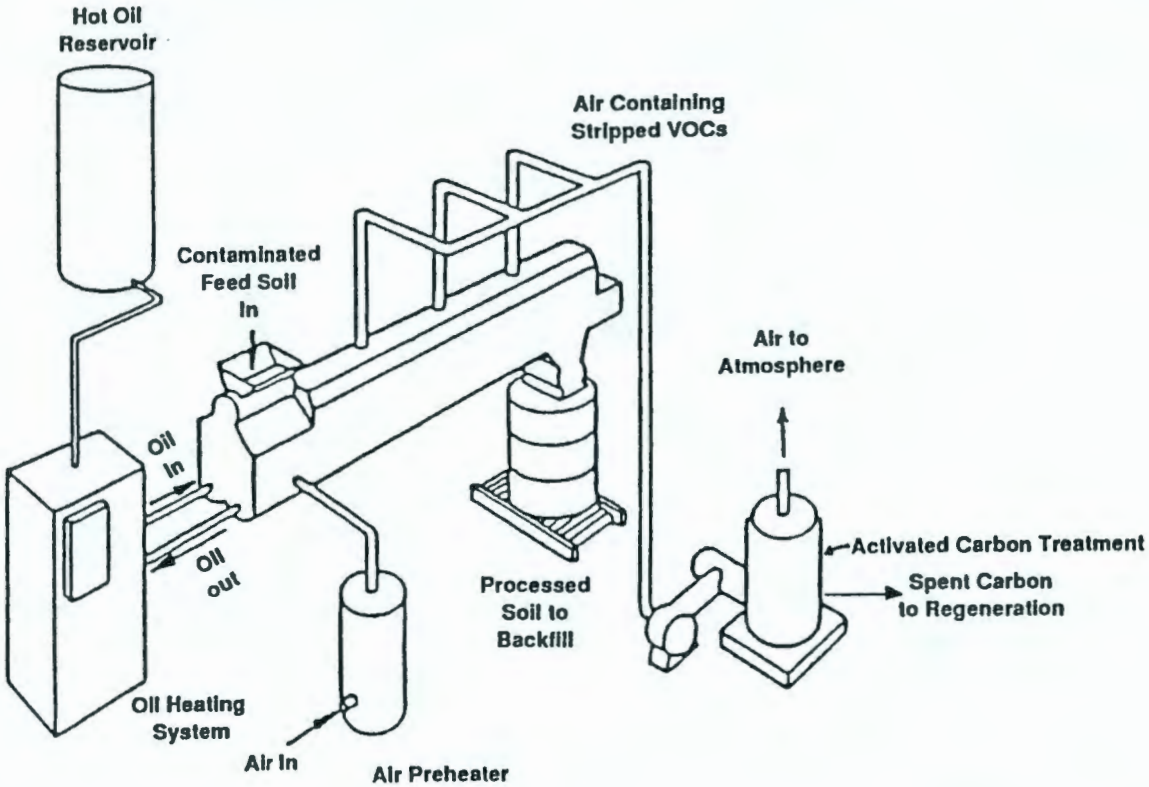

Adapted from: EPA 1988b

FORT LEWIS LOGISTICS CENTER
REMEDIAL INVESTIGATION / FEASIBILITY STUDY

FIGURE 5 - 3
ABOVE GROUND SOIL
AERATION SYSTEM

Section No:
Revision No:
Revision Date:
Page of

envirosphere company
In Association with
SHANNON & WILSON

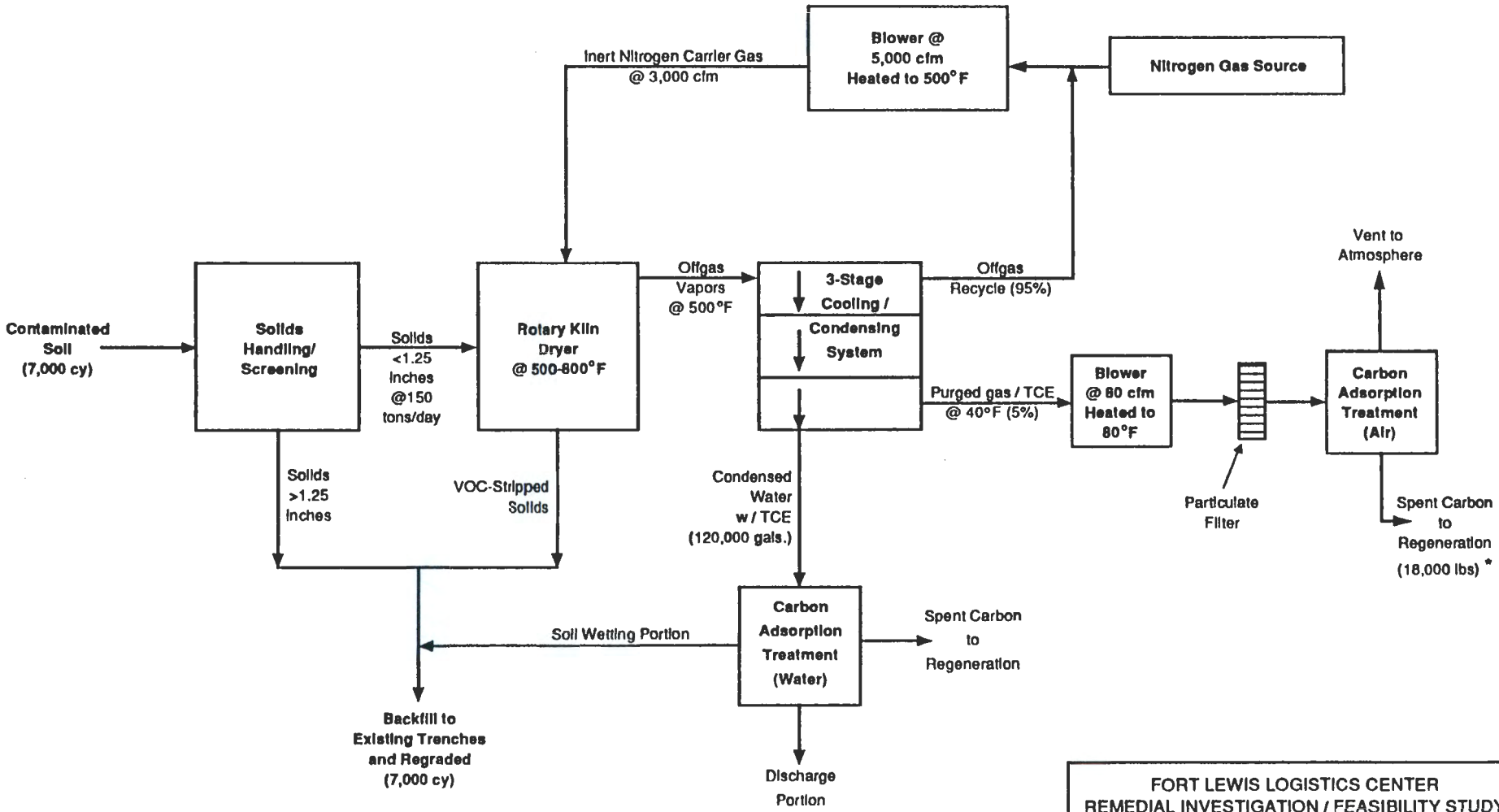

* Total pounds of spent carbon sent to regeneration during remediation.

FORT LEWIS LOGISTICS CENTER
REMEDIAL INVESTIGATION / FEASIBILITY STUDY

FIGURE 5-4
ABOVE-GROUND SOIL AERATION PROCESS FLOW DIAGRAM

Section No.
Revision No.
Revision Date:
Page of

envirosphere company
In Association with
SHANNON & WILSON

treated (approximately 7,000 cubic yards), the minimum time for completion of treatment is estimated between 50 and 70 days. Captured organic vapors will be collected and treated by a carbon adsorption system, with spent carbon to be properly regenerated by the vendor at a RCRA-certified regeneration facility. Efficiency of soil treatment by the above-ground aeration system is expected to be greater than 99 percent, and therefore, no long-term monitoring is required.

A process flow diagram for the treatment system is shown in Figure 5-4. The system consists of a dryer and an off-gas scrubber. The assumed dryer is a rotary kiln indirectly fired with propane as fuel. The contaminated solids are fed by auger into the dryer and heated to 500-800°F. An inert nitrogen carrier gas (with a 3,000 cfm flowrate) transports the volatilized moisture and organics to the off-gas handling system. The offgas system is a three-stage cooling and condensing train which condenses moisture and organics of low, intermediate and high volatility in a stepwise fashion. The condensed water is treated by carbon adsorption. The carrier gas is reheated to 500°F and recirculated at 3,000 cfm into the dryer. A small portion of the carrier gas (5 percent) passes through a filter at 40-80 cfm and a carbon adsorption drum before being vented to the atmosphere. The relatively low temperature heating in the presence of nitrogen prevents undesirable oxidation reactions (EPA 1988c).

It is assumed that the purged offgas from the dryer is scrubbed to remove the TCE and other volatile organics by using a packaged carbon adsorption system. The expected purged gas flowrate is roughly 80 cfm. Skid-mounted carbon beds, each containing 1,800 pounds of carbon, would be used. It is expected that a total of 18,000 pounds of carbon would be required to treat the entire 7,000 cubic yards of contaminated soil. The spent carbon beds would be sealed and shipped to an off-site RCRA-certified regeneration facility. The collected organics would be permanently destroyed.

Based on the expected moisture content of the contaminated soil, approximately 120,000 gallons of condensed water will be collected during the drying process. This condensed water may also require treatment if it contains low-volatility organic contaminants. A mobile carbon adsorption system can be provided to achieve adequate water treatment. The treated water will be added to the dry treated soil to aid in handling and provide cooling to the soil prior to backfilling.

Efficiency of soil treatment for the above ground soil aeration system is expected to be greater than 99 percent, and therefore, no long-term monitoring will be required.

Upon completion and verification of acceptable soil aeration treatment, processed soil would be redeposited into the trenches from which it originated. These trenches would then be regraded and overlaid with mulch and hydroseed.

5.6.5 Air Pollution Impacts and Disposal of Spent Activated Carbon

Air pollution impacts for this alternative will not be significant. Based on previous vendor experience, air emissions from this treatment process are minimal. The alternative employs a carbon adsorption treatment system for the processing of captured organic vapors. Typically, the activated carbon vendor will transport and treat the spent activated carbon.

Offgas from the soil aeration system will be bled to the carbon adsorption treatment units. These units consist of activated carbon modules designed to collect TCE vapors prior to venting to the atmosphere. Based on the amount of TCE expected to be removed, an estimated 18,000 lbs of carbon will be required for treatment. Skid-mounted carbon units can be easily monitored and transported to a RCRA-certified facility for regeneration. Approximately ten units, each containing 1,800 lbs of carbon, are expected to be used for the entire treatment process.

The calculated worst-case ambient TCE concentrations that would occur at the Logistics Center boundary during the excavation are the same as described in Section 5.5.

5.6.6 Public Protection and Worker Safety During Remediation

Worker safety would be ensured through the use of air monitoring and appropriate personal protective gear such as disposable coveralls, gloves, and respirators. These workers would be properly trained to minimize their health risks during soil excavation and treatment. A health and safety specialist would be on-site during all remediation activities.

Off-site persons would not be exposed to significant TCE vapor concentrations that would result from volatilization during excavation or treatment of contaminated soils. As described in Section 5.5, ambient impacts of TCE during excavation are expected to be minimal.

5.6.7 Residual Risk

The main pathways associated with exposure to soil contamination are soil ingestion, inhalation of particulates, dermal contact, and soil vapor inhalation. Only two pathways, soil ingestion and dermal contact, were found to contribute significantly to the risk. The maximum concentration that workers and children will be exposed to once contaminated soils are excavated and treated is 60 mg/kg for TCE and 12 mg/kg for PCE. The cancer risk for on-post workers and children exposed to this maximum trichloroethylene concentration is 1×10^{-6}. The cancer risk for exposure to the maximum concentration of tetrachloroethylene is 9.8×10^{-7}. The hazard index for exposure to the maximum 1,2-dichloroethylene concentration is 2.19×10^{-2}.

5.6.8 Estimated Remediation Cost

The estimated remediation costs for this alternative are shown in Table 5-5. The estimated cost is $1,061,000. All costs are in January 1989 dollars. The unit costs for this alternative were provided primarily by equipment vendors.

Since all work is expected to be completed within one year, and no long-term monitoring is required, all of the costs associated with this project are considered to be one-time capital costs, with no ongoing annual expenses incurred for monitoring and maintenance.

5.7 DESCRIPTION OF IN SITU SOIL AERATION (S6)

For this alternative, soil contaminated with TCE and DCE above the 10^{-6} risk level would be remediated by installing air injection and air extraction wells into the soil. Air would be pumped through the soil to strip the TCE. Activated carbon would be used to remove the TCE from the air stream. This type of system has commonly been used to remediate waste sites consisting of volatile organic spillages with soil volumes exceeding 500 cubic yards (Hutzler et al. 1988; McLearn et al. 1988).

5.7.1 Pre-Construction Activities

The location of material contaminated with TCE above 10^{-6} risk level must be determined before it can be excavated. It is assumed that a detailed soil gas survey and GPR survey of the East Gate Disposal Yard would be performed to locate all of the historical disposal trenches. Additional soil borings would be required to confirm the results of the soil gas survey. For cost calculations it is assumed that two soil borings would be taken in each of the 24 trenches and that two soil samples from each boring would be analyzed for volatile organics.

TABLE 5-5

ROUGH ORDER OF MAGNITUDE COSTS FOR ABOVE-GROUND SOIL AERATION
(+50%, -30%)

Item	Quantity	Unit Cost	Subtotal Cost
Soil Gas Survey and Soil Borings	1	Lump Sum	$100,000
Excavation Plan and Subcontractor Procurement	1	Lump Sum	100,000
Engineering and Site Supervision	1	Lump Sum	100,000
Excavation and Solids Handling	1	Lump Sum	105,000
Soil Treatment System	1	Lump Sum	250,000
Utilities	3 mos	Lump Sum	4,000
Cost of Carbon/Disposal	10 units	$5,000/unit	55,000
Labor and Maintenance	3 mos	Lump Sum	49,000
Analytical Testing & Confirmatory Sampling	1	Lump Sum	75,000
System Fuel	3 mos	Lump Sum	11,000
SUBTOTAL			$849,000
25% Contingency			212,000
TOTAL ESTIMATED COSTS			$1,061,000

Once the location of the contamination has been confirmed, a pilot-scale study would be performed. The purpose of the pilot-scale study would be to determine the effectiveness of the above-ground soil aeration system for the contaminated soils at the site. In addition, engineering information needed for detailed design would be obtained.

5.7.2 Injection/Extraction Well Field

Aerial photographs of the East Gate Disposal Yard show approximately 24 disposal trenches, arranged in two general groups. The exact configuration of the air injection and extraction wells that would be used in each of the two groups would depend on the results of the preliminary soil gas survey. It is presumed that the contaminated soil inside the trenches has a higher air permeability than the native soils surrounding the trenches, which would probably cause a preferential air flow pattern parallel to the trenches rather than across the trenches through the sidewalls. The air injection and air extraction well fields would have to be carefully designed to prevent unacceptable channeling within the trenches, which would cause the formation of "dead spots" within the air flow pattern and result in reduced air stripping performance.

The assumed design values for the extraction system are listed in Table 5-6. The design values are based mainly on the results of pilot studies that were performed at a TCE-contaminated site that had soil volumes, depths and contaminant concentrations similar to those that are assumed to exist at the East Gate Disposal Yard (Weston 1985). For this design it is assumed that separate in situ aeration systems would be installed at each of the two groups of trenches at the East Gate Disposal Yard. For cost purposes, it is assumed that the wells would be spaced roughly 50 feet apart. The assumed well system for each of the two groups of trenches is as follows:

TABLE 5-6

ASSUMED DESIGN VALUES FOR IN SITU AERATION SYSTEMS

Basis: The following design values account for the total in situ aeration system at the East Gate Disposal Yard, which would consist of two independent systems (one at each of two separate trench areas).

ITEM	DESIGN VALUE
Assumed Soil Contamination	
Soil Volume	7,000 cy
TCE Concentration	240 mg/kg
TCE Quantity	4,000 lbs
Air Injection Wells @ 10 ft. Depth	6
Air Extraction Wells @ 10 ft. Depth	24
Above Ground Manifold Piping	2,000 feet
Aeration Flow Rate	500 cfm
Synthetic Cover Type	30-mil PVC with 6-inch soil cover
Total Cover Area	75,000 sq. feet
GAC Scrubber Size	1,800 lbs per module
Total GAC Usage	36,000 lbs

- Air Injection Wells - Three air injection wells would be installed in each of the two groups of trenches. As shown in Figure 5-5 each of the injection wells would be slotted 3-inch PVC and would be installed to a depth of 10 feet. The annular space around the slotted sections would be packed with gravel. The annular space around the solid pipe sections would be sealed with bentonite/clay to prevent air from short circuiting upward around the well casings.

- Air Extraction Wells - Twelve extraction wells would be installed in each of the two groups of trenches. The extraction wells would be installed in a geometric pattern so that four extraction wells would surround each of the three air injection wells. As shown in Figure 5-5 the extraction wells would be constructed of slotted 3-inch PVC, and would be installed to a depth of 10 feet. The annular spaces would be packed in a manner similar to that used for the air injection wells.

- Impermeable Cover - Impermeable covers are not normally required at waste sites with homogeneous soils (Hutzler et al. 1988). However, the East Gate Disposal Yard consists of a geometric arrangement of permeable soil in trenches interspersed with non-permeable native soils. It is assumed that a synthetic liner would have to be placed over the trenches to prevent ambient air from flowing into the trenches and causing unacceptable airflow channelling. For cost purposes it is assumed that each of the two general trench areas would be overlain by a 250 foot by 150 foot liner of 30-mil PVC. The PVC liner would be anchored by covering it with a 6-inch soil layer.

- Air Injection System - It is assumed that an injection airflow of 250 cfm would be needed for each of the two general trench areas, based on the results of treatment studies at a similar waste site (Weston 1985). The aeration systems at each of the two trench areas would use two air blowers. An air injection blower would operate at a 250 cfm airflow and roughly 10 to 12 inch w.g. pressure. An extraction air fan would operate at the same 250 cfm

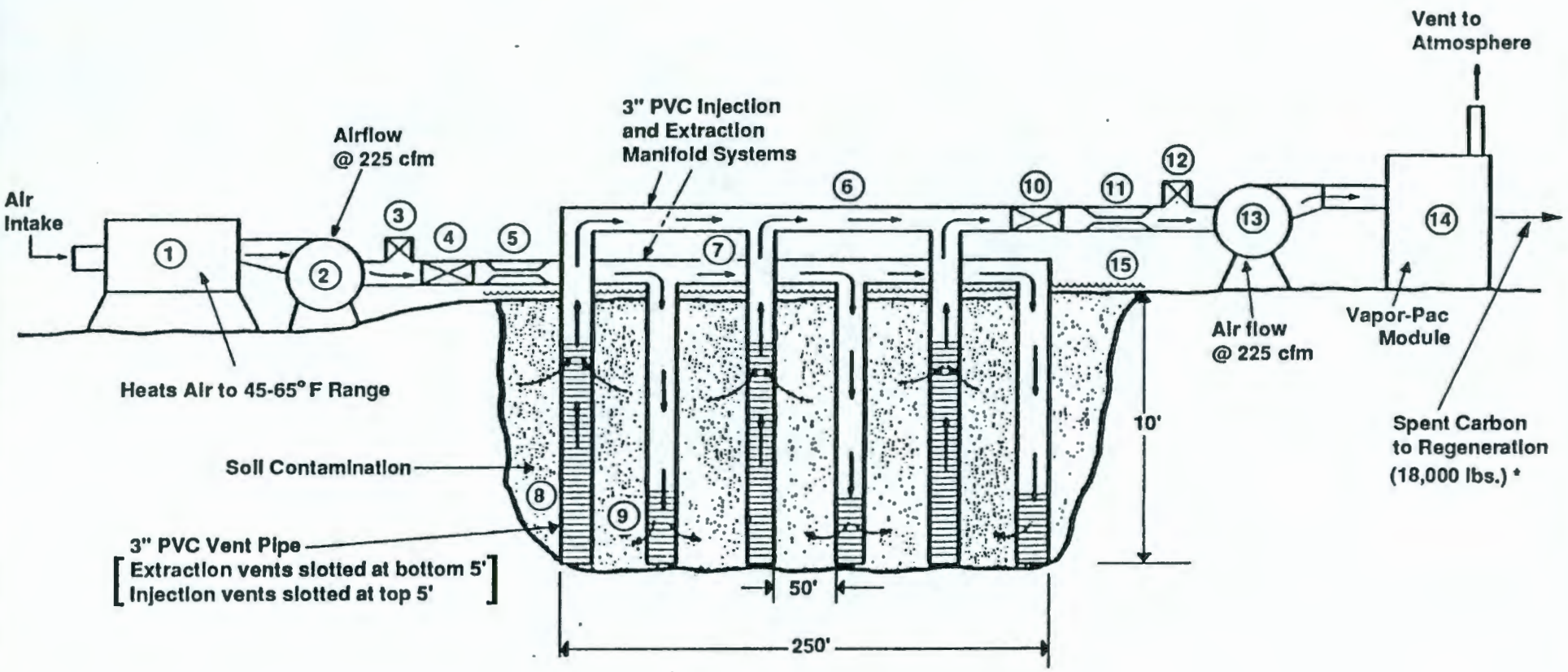

NOT TO SCALE

* Total pounds of spent carbon sent to regeneration during remediation.

1 Electric Air Flow Heater	8 Slotted Vertical Extraction Vent Pipe (typ)
2 Forced Draft Injection Fan	9 Slotted Vertical Injection Vent Pipe (typ)
3 Injection Air Bypass Valve	10 Extraction Air Sampling Port
4 Injection Air Sampling Port	11 Extraction Air Flow Meter
5 Injection Air Flow Meter	12 Extraction Air Bypass Valve
6 Extraction Manifold	13 Induced Draft Extraction Fan
7 Injection Manifold	14 Vapor Carbon Package Treatment Unit
	15 30-mil PVC Cover

ADAPTED FROM: WESTON 1985.

FORT LEWIS LOGISTICS CENTER
REMEDIAL INVESTIGATION / FEASIBILITY STUDY

FIGURE 5-5
IN-SITU SOIL AERATION
PROCESS FLOW DIAGRAM

Section No:
Revision No:
Revision Date:
Page of

envirosphere company
In Association with
SHANNON & WILSON

airflow and at roughly 17 to 20 inch w.g. vacuum. The air injection blowers would be housed in heated buildings, so the injected air would be preheated to 45-65 degrees F.

- Above Ground Air Manifolds - The injection and extraction wells would be connected to the air fans using above ground manifolds. The piping would consist of 3-inch PVC. The above ground pipes would be insulated with a fiberglass cover to prevent moisture condensation inside the pipes. Roughly 1,000 feet of above ground piping would be needed at each of the two trench areas.

5.7.3 Extracted Air Treatment

The TCE in the extracted air would be removed by using commercially available, packaged activated carbon adsorption units. For cost purposes it is assumed that packaged systems such as Calgon Carbon Corporation's "Vapor-Pac" units would be used. These consist of prefabricated treatment modules, each of which contains 1,800 pounds of regenerable activated carbon. The modules are available on a rental basis. Typically, the activated carbon vendor would install the modules, replace them once the carbon is exhausted, and regenerate the activated carbon at a RCRA-certified regeneration facility. It is assumed that a total of 36,000 pounds of carbon (20 modules) would be required to remove all the stripped TCE, based on remediation of 7,000 cy of soil contaminated with 240 mg/kg of TCE. Note that this alternative would require more activated carbon than would the Above-Ground Aeration alternative. This is because the gas stream for the *in situ* alternative would have a higher moisture content, which reduces the capacity of activated carbon.

The cleaned gas would be emitted through a short stack. The air emission treatment system would be approved by the WDOE and EPA.

Daily monitoring of TCE and DCE concentrations at the inlet and outlet of the activated carbon treatment system would be performed. The inlet concentrations would be monitored to track the extent of TCE removal from the soil that was achieved by the aeration system. The outlet concentrations would be monitored to determine when the GAC modules were exhausted.

5.7.4 Time Required to Complete Remediation

It is expected that the the site could be remediated within two years of approval to proceed. The preliminary soil gas and GPR surveys would take approximately 6 months. Data analysis, site engineering, and procurement of the remediation vendor would require an additional six months. Installation of the extraction and treatment systems would not be difficult, but would be time consuming because of the large number of injection and extraction wells. It is expected that installation would be complete within 3 months of subcontractor procurement.

The time required to strip all of the TCE from the East Gate Disposal Yard would depend on the permeability of the soils and the amounts of organic sludges that might have been disposed of into the disposal yard. Each of the two aeration systems at the East Gate Disposal Yard are expected to remove roughly 20 pounds per day of TCE based on the results of treatment systems at other facilities (Weston 1985). At that treatment rate it would take roughly 100 days to remediate the East Gate Disposal Yard soils.

5.7.5 Post-Remediation Confirmatory Sampling

Confirmatory soil sampling would be done at the end of the project to demonstrate that TCE concentrations in the trenches were reduced to below 60 mg/kg (10^{-6} risk level). It is assumed that two soil borings would be taken to a 10 foot depth in each of the 24 trenches, and that two soil samples from each borehole would be analyzed for

volatile organic compounds. The soil aeration would continue if the confirmatory sampling showed unacceptably high residual TCE concentrations.

5.7.6 Action-Specific ARARs

As described in Section 1.5, implementation of this alternative is subject to the following regulations:

- Hazardous Waste Manifesting--Transportation of any spent carbon must comply with all applicable hazardous waste manifesting requirements.

- Hazardous Waste Generator Permit--The Washington Department of Ecology (WDOE) is the lead agency for issuing hazardous waste generator permits under the State regulations (WAC 183-303). For the Logistics Center's generation of spent carbon, the Army must submit the equivalent of the one-time generator permit application.

- WDOE Air Quality Regulations--All substantive portions of General Regulations for Air Pollution Sources (WAC 173-400) and the Ambient Air Quality Standard for Particulate Matter (WAC 173-470) must be met in order to obtain approvals.

- OSHA Workplace Limits--Limits for TCE concentrations in the workplace are implemented by the Occupational Safety and Health Administration (OSHA). These limits will apply to installation and treatment activities for the contaminated soils at the Logistics Center.

5.7.7 Public Safety and Worker Safety During Remediation

No problems with worker exposure are expected. Worker safety would be ensured through the use of air monitoring, personal protective clothing, and special health and safety gear such as respirators. The workers would be trained specialists. A certified industrial hygienist would oversee all remediation activities.

5.7.8 Residual Risk

The main pathways associated with exposure to soil contamination are soil ingestion, inhalation of particulates, dermal contact, and soil vapor inhalation. Only two pathways, soil ingestion and dermal contact, were found to contribute significantly to the risk. The maximum concentration that workers and children will be exposed to once contaminated soils have been remediated is 60 mg/kg for TCE and 12 mg/kg for PCE. The cancer risk for on-post workers and children exposed to this maximum trichloroethylene concentration is 1×10^{-6}. The cancer risk for exposure to the maximum concentration of tetrachloroethylene is 9.8×10^{-7}. The hazard index for exposure to the maximum 1,2-dichloroethylene concentration is 2.19×10^{-2} for adults and children.

5.7.9 Estimated Remediation Costs

The estimated ROM remediation costs for this alternative are listed in Table 5-7. The total estimated cost is $815,000. All costs are in January 1989 dollars. The unit costs for the extraction wells and above ground piping were taken from standard costing sources (Means, 1986). Costs for soil sampling, utilities and labor were based on Ebasco Environmental's judgment. The costs for the activated carbon system were based on vendor information.

Since all work is assumed to be completed within one to two years upon approval, all of the remediation costs are considered to be one time capital expenses. No additional monitoring or maintenance of the site would be needed, so no annual expenses would be incurred.

5.8 EVALUATION AND COMPARISON OF SOIL REMEDIATION ALTERNATIVES

Each of the remedial alternatives were evaluated using the criteria described in Table 5-1. A summary of the ratings that were given to each alternative are presented in Tables 5-8 to 5-13. The ratings and costs for each alternative are compared in Table 5-14. Full descriptions of the evaluations for the soil remedial alternatives are given in Appendix D.

TABLE 5-7

ROUGH ORDER OF MAGNITUDE COSTS (+50%, -30%)
FOR IN SITU AERATION

Item	Quantity	Unit Cost	Subtotal Cost
Soil Gas, GPR, and Soil Borings	Lump Sum	$100,000	$100,000
Engineering and Site Supervision	--	--	$100,000
Injection and Extraction Wells	30 wells	2,200	66,000
Above Ground Manifold System	2,000 ft	19.00/LF	38,000
Heated Blower Buildings	2	10,000	20,000
Fans, Meters, etc.	4	2,500	10,000
Synthetic Cover	75,000 ft^2	$1.50/$ft^2$	112,000
Activated Carbon Regeneration	20 modules	5,000 each	100,000
Operating Labor	6 months	100,000/yr	50,000
Air Stream TCE Sampling	200 samples	$100/sample	20,000
Utilities and Electricity	6 months	--	5,000
Confirmatory Soil Sampling	96 samples	350/sample	34,000
Subtotal Cost			$655,000
25% Contingency			160,000
TOTAL COST			$815,000

TABLE 5-8

EVALUATIONS FOR "SHORT-TERM EFFECTIVENESS DURING CONSTRUCTION"

Remedial Alternative	Evaluation
S-1: No Action	Rating = High. Since no physical remediations are involved, this alternative would pose no short-term risks to either workers or the public during the remediation. No short term environmental impacts would result.
S-2: Institutional Controls	Rating = High. Since no physical remediations are involved, this alternative would pose no short-term risks to either workers or the public during the remediation. The existing health risks are minimal because the contaminated soils are in an inactive landfill. No short-term environmental impacts would result from this alternative.
S-3: Concrete Cap	Rating = High. The surrounding community will not be affected by construction of a concrete cap to isolate and seal contaminated soils from surface contact. Impacts to workers during site preparation can be minimized through use of protective clothing, dust suppression measures and respirators, if needed. No exposure to contaminants is expected during the cement pouring and casting phases of construction. Environmental impacts from implementing this alternative will be negligible as there are no sensitive areas in the vicinity of the waste trenches. A concrete cap could be installed within 6 months and accomplish its objectives of sealing the contaminated soil and minimizing water infiltration through the soil.
S-4: Excavate and Ship to Off-site Landfill	Rating = Low. Offers only a moderate degree of protection for community during remediation. The air quality impacts would be moderate. The workers would handle the waste so some potential for exposure exists. Excavation workers would be protected through normal health and safety procedures. Minimal adverse environmental impacts. Excavation can be completed within roughly one year.

TABLE 5-8 (Continued)

EVALUATIONS FOR "SHORT-TERM EFFECTIVENESS DURING CONSTRUCTION"

Remedial Alternative	Evaluation
S-5: Excavate and Treat Using Above Ground Soil Aeration	Rating = Medium. Offers only a moderate level of public protection. Excavating the contaminated soil would cause potential health and safety risks to on-site workers during remediation. Moderately significant air quality impacts. Remediation can be completed within roughly one year.
S-6: In-Situ Aeration	Rating = Medium. Offers high level of public protection. However, installation of air injection and extraction wells may add health and safety risks to on-site workers during remediation. No significant air quality impacts. Remediation can be completed within roughly one to two years.

TABLE 5-9

EVALUATIONS FOR "LONG-TERM EFFECTIVENESS"

Remedial Alternative	Evaluation
S-1: No Action	Rating = Low. The magnitude of residual risk would exceed the currently proposed levels used to establish cleanup goals. Groundwater monitoring would be a reliable and adequate control for detecting future increases in contaminant leaching.
S-2: Institutional Controls	Rating = Medium. The magnitude of residual risk would not exceed the currently proposed levels used to establish clean-up goals. In addition, this alternative would adequately address the main remedial objective: prevent direct exposure to contaminated soils. However, it would not prevent further leaching of contaminants from the soil to the groundwater. The proposed groundwater monitoring would be a reliable and adequate control for detecting future increases in contaminant leaching.
S-3: Concrete Cap	Rating = High. There is little residual risk to human health and the environment once the concrete cap is installed since the contaminated soil is isolated from the public and the environment. Direct contact between soil and the public is eliminated while downward permeation of runoff is minimized which reduces further contaminant transport into the groundwater. A concrete cap is durable and will prove to be reliable for more than the thirty-year project life with only minimal maintenance.
S-4: Excavate and Ship to Off-site Landfill	Rating = High. Residual on-site risks would be minimal. Would contribute slightly to the need for long term controls at the off-site facility, although those controls at the off-site facility would be required regardless of whether this alternative was selected. The reliability of the environmental controls at the off-site facility would be high if the facility is properly managed.

TABLE 5-9 (Continued)

EVALUATIONS FOR "LONG-TERM EFFECTIVENESS"

Remedial Alternative	Evaluation
S-5: Excavate and Treat Using Above Ground Soil Aeration	Rating = High. Potential future risks are insignificant since organic contaminants are removed from soil and permanently destroyed. No special long-term controls or monitoring required.
S-6: *In-Situ* Aeration	Rating = High. Collected organics will be permanently destroyed; however, residual pockets of contaminated soil may exist after remediation if complete *in situ* treatment is not effective. Complete verification of organics removal may be difficult; however, potential future risks would still be insignificant. No special long-term controls or monitoring required.

TABLE 5-10

EVALUATIONS FOR "REDUCTION OF TOXICITY, MOBILITY AND VOLUME"

Remedial Alternative	Evaluation
S-1: No Action	Rating = Low. No reductions in toxicity, mobility or volume would be achieved. No contaminated material would be treated or destroyed.
S-2: Administrative Controls	Rating = Low. This alternative would not reduce either the toxicity, mobility, or volume of contaminated soil. No contaminated material would be treated or destroyed.
S-3: Concrete Cap	Rating = Medium. The concrete cap seals contaminated material preventing contact with humans and the environment. However, no hazardous materials are either destroyed or treated with installation of a cap. Mobility of contaminants is greatly reduced, but their toxicity and volume are unaffected. Although the concrete cap is designed to be a permanent structure, it is not irreversible and could be removed later at some expense and trouble. All of the contaminated material remains at the site and even though the risk it presents is low, the concrete cap receives a medium rating.
S-4: Excavate and Ship to Offsite Landfill	Rating = Medium. This alternative directly addresses the main remedial objective: prevent direct exposure to the contaminated soil. However, none of the contaminated material would be intentionally treated although some reduction in TCE concentration is expected because of volatilization during the excavation and shipping. The mobility of the contaminated waste would be reduced by moving the soil to a controlled, monitored landfill. The onsite remediation would be permanent, but it would contribute slightly to the need for continuing controls at the offsite facility. The residual risks, both onsite and offsite, would be minimal.

TABLE 5-10 (Continued)

EVALUATIONS FOR "REDUCTION OF TOXICITY, MOBILITY AND VOLUME"

Remedial Alternative	Evaluation
S-5: Excavate and Treat Using Above Ground Soil Aeration	Rating = High. Contaminants removed from soil and treated in air, thereby significantly reducing waste toxicity, mobility and volume. Collected organics would be permanently destroyed.
S-6: In-Situ Aeration	Rating = High. Mobility, toxicity and volume are significantly reduced by in situ aeration, with captured organic vapors treated by carbon adsorption and permanently destroyed. If properly operated, remediation would be considered permanent with minimal residual risks.

TABLE 5-11

EVALUATION OF SOIL REMEDIATION ALTERNATIVES
FOR "IMPLEMENTABILITY"

Remedial Alternative	Evaluation
S-1: No Action	Rating = High. No physical remediation would be involved. Groundwater monitoring could begin immediately. Groundwater monitoring would adequately predict future increases in leaching from the soil to the groundwater. This alternative would not interfere with future remediations, if required. No construction or operating permits would be required. No RCRA facilities would be required. No special equipment or specialists would be needed. All required technologies are currently readily available.
S-2: Institutional Actions	Rating = High. No physical remediation would be involved. Groundwater monitoring could begin immediately. Groundwater monitoring would adequately predict future increases in leaching from the soil to the groundwater. This alternative would not interfere with future remediations, if required. No construction or operating permits would be required. No RCRA facilities would be required. No special equipment or specialists would be needed. All required technologies are currently readily available.
S-3: Concrete Cap	Rating = High. A concrete cap will be easy to construct and not require any operators as with other alternatives. The cap will provide a reliable barrier between the contaminated soil and the environment. Further remedial action would likely require the removal of the cap which could be a costly procedure, but this requirement is unlikely. Monitoring of groundwater can determine the effectiveness of the cap in minimizing surface water infiltration through the contaminated soil, while the condition of the cap can be easily determined by periodic inspection. Coordination among different agencies is not expected to offer any difficulty. Qualified and certified contractors with typical construction equipment are readily available. All required technology has been extensively proven.

TABLE 5-11 (Continued)

EVALUATION OF SOIL REMEDIATION ALTERNATIVES
FOR "IMPLEMENTABILITY"

Remedial Alternative	Evaluation
S-4: Excavate and Ship to Off-site Landfill	Rating = Medium. Would be easy to perform, with little uncertainty in the process. However, disposal must be accomplished before November 1990, before imposition of the EPA Land Ban. The excavation technology is well tested and can be done with minimal delays. Future remediation of the trenches would be possible if required, but the requirement would be unlikely. Future on-site monitoring not required. Monitoring of the off-site disposal facility would be required whether or not this alternative is implemented. Required monitoring at the off-site facility would be easy and would identify all exposure pathways. Permits from key agencies could be quickly and easily obtained. All required RCRA facilities are readily available until November 1990, but after that time this alternative prohibited by RCRA. Qualified contractors with the required equipment are readily available. No developmental technologies would be required.
S-5: Excavate and Treat Using Above Ground Soil Aeration	Rating = Medium. Alternative technology requires treatment testing and operation. Mobile treatment system readily set up on-site and operable within weeks. However, only a few available vendors exist. Technology has been tested at only one CERCLA site. Future remediation and monitoring is not required since organics removed from soil. Approvals and permits should be readily attained. Technical specialists and necessary equipment is currently available.
S-6: In-Situ Aeration	Rating = Medium. Alternative technology requires treatment testing and operation. This system has commonly been used for remediation of underground tanks. Easily installed on-site. However, proof of treatment efficiency could be difficult. Future remediation and monitoring should not be required. Approvals/permits should be readily attained and necessary specialists/equipment should be available.

TABLE 5-12

EVALUATION OF SOIL REMEDIATION ALTERNATIVES
FOR "COMPLIANCE WITH ARARs"

Remedial Alternative	Evaluation
S-1: No Action	Rating = High. No action-specific ARARs are applicable.
S-2: Administrative Controls	Rating = High. No action-specific ARARs are applicable.
S-3: Concrete Cap	Rating = High. A concrete cap will require no special permits or licenses. The alternative will therefore present no compliance problems for action- and location-specific ARARs.
S-4: Excavate and Ship to Off-site Landfill	Rating = Medium. Major problems would exist if the EPA Land Ban deadline of November, 1990 was not met. This remediation would otherwise satisfy all contaminant-, action-, and location- specific ARARs. No difficulties are expected in applying for the WDOE Generator Permit or the hazardous waste manifest forms.
S-5: Excavate and Treat Using Above Ground Soil Aeration	Rating = High. This remediation would satisfy all contaminant-, action-, and location-specific ARARs. No difficulties are expected in applying for the WDOE generator permit or the hazardous waste manifest forms.
S-6: In-Situ Aeration	Rating = High. This remediation would satisfy all contaminant-, action-, and location-specific ARARs. No difficulties are expected in applying for the WDOE generator permit or the hazardous waste manifest forms.

TABLE 5-13

EVALUATION OF SOIL REMEDIATION ALTERNATIVES
FOR "PROTECTION OF HUMAN HEALTH AND THE ENVIRONMENT"

Remedial Alternative	Evaluation
S-1: No Action	Rating = Low. The remedial response objectives would not be satisfied. Continued exposure to contaminated soil would be possible. No reductions in potential leaching from the soil to groundwater would be attempted.
S-2: Institutional Actions	Rating = Medium. All of the remedial response objectives would be satisfied. This alternative would adequately address the most important human health issue: prevent direct exposure to the contaminated soil by minimizing access and prohibiting future construction activities in it. However, no reductions in potential leaching from the soil to groundwater would be achieved by this alternative.
S-3: Concrete Cap	Rating = Medium. Installation of a concrete cap will seal the contaminated soil eliminating future human exposure and minimize transport of contaminants to the groundwater by infiltration. However, the contaminated soil would still be present. Impacts to the environment will be minimal, including the effects of surface runoff which is collected by a drainage ditch surrounding the capped area.
S-4: Excavate and Ship to Off-site Landfill	Rating = High. This alternative would address the main remedial objectives: prevent direct exposure to the contaminated waste. Remediation would remove uncontrolled contaminated soil from the site and send it to a facility where human exposure would be minimized and continuously monitored. Environmental impacts would be minimal. The site would be restored to its original condition.

TABLE 5-13 (cont.)

EVALUATION OF SOIL REMEDIATION ALTERNATIVES
FOR "PROTECTION OF HUMAN HEALTH AND THE ENVIRONMENT"

Remedial Alternative	Evaluation
S-5: Excavate and Treat Using Above Ground Soil Aeration	Rating = High. Remediation would remove organics from soil and result in their permanent destruction, thereby minimizing potential human exposure in the future. Environmental impacts would be minimal. Site would be restored to its original condition.
S-6: In-Situ Aeration	Rating = High. Remediation would remove organics from soil and result in their permanent destruction, thereby minimizing potential human exposure in the future. Environmental impacts would be minimal. Site would be restored to its original condition.

TABLE 5-14

COMPARISON OF RATINGS FOR SOIL SOURCE AREA REMEDIAL ALTERNATIVES

Evaluation Criterion	No Action	Institutional Controls	Concrete Cap	Excavate/ Off-site Landfill	In Situ Aeration	Excavate/ Above Ground Aeration
Short-Term Effectiveness During Construction	High	High	High	Low	Medium	Medium
Long-Term Effectiveness	Low	Medium	High	High	High	High
Reduction of Toxicity, Mobility and Volume	Low	Low	Medium	Medium	High	High
Implementability	High	High	High	Medium	Medium	Medium
Compliance with ARARs	High	High	High	Medium	High	High
Support Agency Acceptance 1/						
Community Acceptance 1/						
Protection of Human Health and Environment	Low	Medium	Medium	High	High	High
Estimated Costs						
o Capital	$ 0	$65,000	$921,000	$2,250,000	$815,000	$1,061,000
o Annual	2,500	2,500	5,000	0	0	0
o 30-yr Present Worth Cost (i=10%)	23,000	88,000	970,000	2,250,000	815,000	1,061,000
o 30-yr Present Worth Cost (i=4%)	$43,000	$108,000	$1,007,000	$2,250,000	$815,000	$1,061,000

1/ Support agency acceptance and community acceptance will be discussed in the Record of Decision and the Responsiveness Summary.

7679K

6.0 DETAILED ANALYSIS OF GROUNDWATER ALTERNATIVES

The four candidate groundwater alternatives are described and undergo a detailed analysis in this section. The evaluation criteria used in the detailed analysis are discussed in Section 6.1. Groundwater modeling was used to obtain more accurate estimates of the flowrate of the groundwater that would be pumped and the concentration of TCE that would be in the extracted groundwater. A discussion of the groundwater modeling results is given in Section 6.2. The no action alternative (alternative G-1); groundwater extraction along I-5, air stripping, and recharge alternative (alternative G-2); and the combined groundwater extraction along I-5 and near source areas, air stripping, and recharge alternative (alternative G-3) are described in Sections 6.3, 6.4, and 6.5, respectively. The four alternatives are evaluated in Section 6.6 and Appendix E, and a summary is given in Section 6.7.

6.1 EVALUATION CRITERIA

The evaluation criteria used during the detailed analysis of groundwater alternatives are the same criteria used for the detailed analysis of the soil alternatives (refer to Section 5.1). These criteria are short-term protection of human health and the environment; long-term protection of human health and the environment; reduction of toxicity, mobility, or volume of contaminants; implementability; cost; compliance with ARARs; protection of human health and the environment; support agency acceptance; and community acceptance.

6.2 RESULTS OF GROUNDWATER MODELING

A preliminary estimate of the groundwater pump rate necessary to intercept the contaminated groundwater was made in Section 4.2.1. This was adequate for the development of alternatives, since only similar process options were being compared. However, for the detailed analysis a more precise estimate of the groundwater pump rate was needed to accurately compare the no action, institutional action, and

the two pump and treat alternatives. Therefore, a more refined estimate of the groundwater pump rate was obtained by modeling the groundwater.

The objectives of the groundwater modeling were as follows:

- Estimate the TCE emission rate from source areas that may be responsible for the current groundwater plume under the Logistics Center;

- For Alternative G-1, determine the extent of contamination in the groundwater after 30 years with no remediation;

- For Alternative G-2, determine the length of the extraction well field along I-5 and the total pumpage rate that would be required to prevent the plume from continuing to migrate under Tillicum;

- For Alternative G-3, determine the locations of the extraction wells downgradient of the East Gate Disposal Yard and the total pumpage rate required to prevent the plume from continuing to migrate under the Logistics Center;

- For Alternatives G-2 and G-3, estimate the number of years of pumping that would be needed to remediate the plume; and

- Estimate the effects of reinjection of treated groundwater on the rate of plume remediation.

A groundwater modeling program developed by Konikow and Bredehoeft (1978) was used to generate the information required for the detailed analysis. A description of this program and the calibration procedures can be found in Appendix G.

The results of the groundwater modeling for Alternative G-1 show that there is no significant change in the extent of contamination over 30 years (see Figure 6-1). There may be slight increases in the

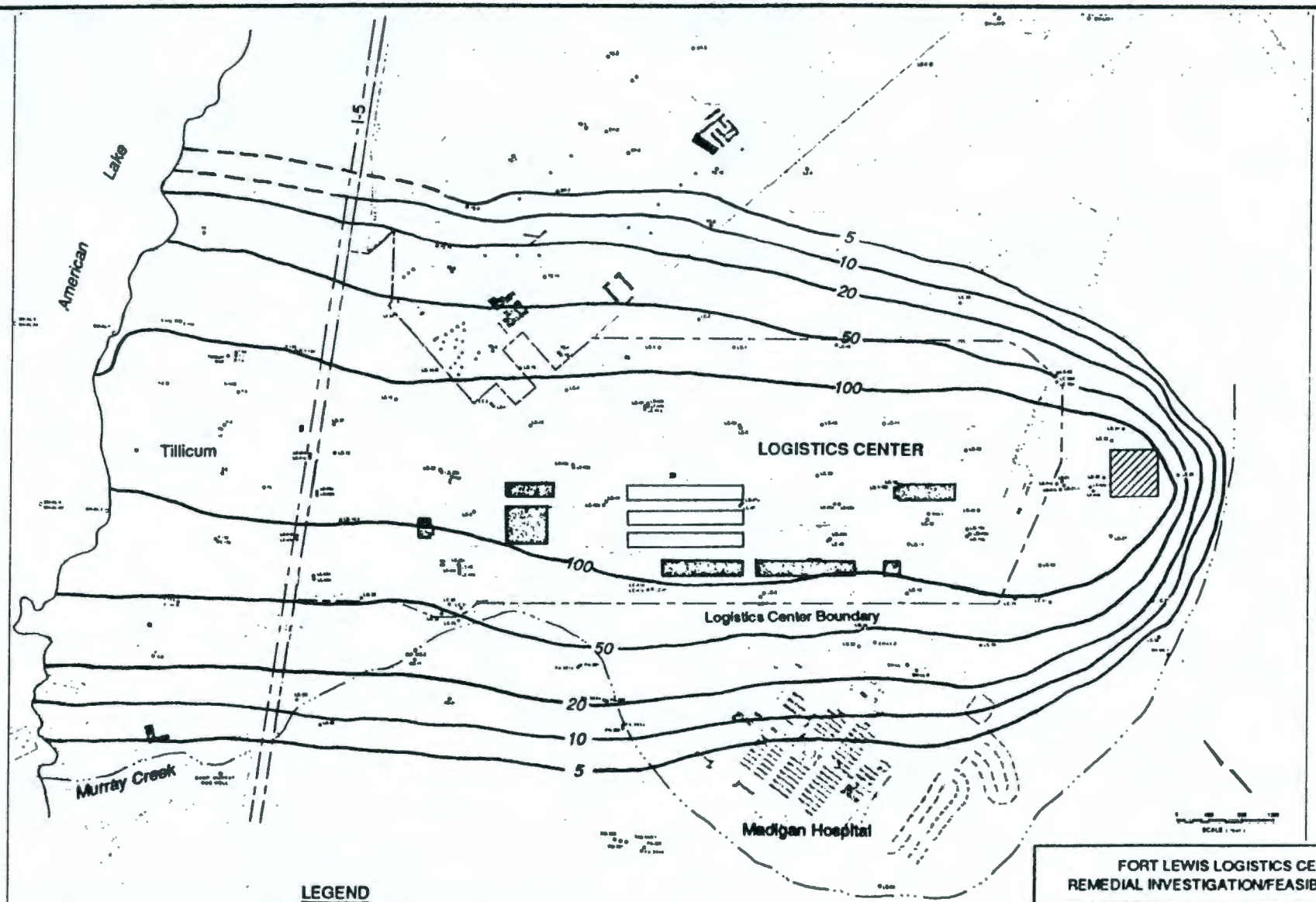

LEGEND

5 — Equal TCE Concentration Contours at 5, 10, 20, 50 and 100 ppb

— — — Plume Projected Where It Extends Beyond the Model Boundary

TCE Source Area

NOTE

Contours are the simulated result of TCE injection at Source Area for 72 years.

FORT LEWIS LOGISTICS CENTER
REMEDIAL INVESTIGATION/FEASIBILITY STUDY

FIGURE 6-1
ALTERNATIVE G-1
TCE CONCENTRATION AFTER 30 YEARS WITH NO REMEDIATION

Section No.
Revision No.
Revision Date
Page of

envirosphere company
In Association with SHANNON & WILSON

concentration of the contamination downgradient of the Logistics Center; however, the lateral extent of the plume will not change significantly. This result is based on the assumption that releases of TCE and DCE from the source areas to the aquifer will remain constant for the next 30 years at the level that was found to predict the current concentration profile at the site (see Appendix G). Since there is no way of verifying whether releases to the aquifer are still occurring or how long releases will continue to occur, it is impossible to predict how long it will take to reach the remedial action goals if no remediation is performed. Since releases to the aquifer will most likely decrease with time, the assumption that the releases will remain constant for the next 30 years is extremely conservative and should predict the worse-case extent of contamination after 30 years with no remediation.

For alternative G-2, the optimum arrangement of the extraction wells for quickly stopping movement of contaminated groundwater off-site was determined using the groundwater model. Specifically, the optimum location of the extraction wells parallel to I-5 and the optimum extraction rate from these wells was determined. For alternative G-3, the optimum arrangement of extraction wells for quickly stopping movement of contaminated groundwater off-site and for quickly remediating groundwater beneath the Logistics Center was determined. Thus, in addition to the optimum arrangement for the I-5 extraction wells, the optimum location of the extraction wells near the source areas and the optimum extraction rates from these wells was determined. The groundwater modeling also provided estimates of the concentration of TCE in the extracted groundwater from each well, and an estimate of the time required for remediation.

The results of the groundwater modeling for alternative G-2 show that a 3,500-foot-long line of wells located parallel to I-5 and pumped at a total rate of 5,000 gpm is required to stop the migration of contaminated groundwater into Tillicum. This line of wells was modeled as five wells being pumped at a rate of 1000 gpm because the model allows only one extraction well per cell or grid block (see

Appendix G). The actual line of wells will probably consist of a much larger number of wells being pumped at a lower rate. The TCE concentration contours in the groundwater as a function of time are shown in Figures 6-2, 6-3, 6-4, and 6-5. Figure 6-2 shows the TCE concentration in the groundwater prior to any pumping. From this, it may be determined that the initial concentration of TCE in the groundwater pumped to the treatment plant is expected to be about 70 ppb. Figures 6-3, 6-4, and 6-5 show TCE concentration contours after 10, 20, and 30 years of pumping, respectively. These figures show that the groundwater beneath Tillicum should be remediated in 10 to 20 years.

The results of the groundwater modeling for alternative G-3 show that a 3,500-foot-long line of wells located parallel to I-5 and pumped at a total rate of 5,000 gpm is required to stop the migration of contaminated groundwater into Tillicum. This line of wells was modeled as five wells being pumped at a rate of 1,000 gpm because the model allows only one extraction well per cell or grid block (see Appendix G). The actual line of wells will probably consist of a much larger number of wells being pumped at a lower rate. In addition, two sets of wells located near the source areas pumped at a total rate of 2,000 gpm are required to remediate groundwater beneath the Logistics Center. Each set of wells was actually modeled as a single well being pumped at a rate of 1000 gpm for the same reasons as described above. The TCE concentration contours in the groundwater as a function of time are shown in Figures 6-6, 6-7, 6-8, and 6-9. Figure 6-6 shows the TCE concentration in the groundwater prior to any pumping. From this, it may be determined that the initial concentration of TCE in the groundwater pumped from the I-5 wells is again expected to be about 70 ppb, and the initial TCE concentration in the groundwater pumped from the source area wells is expected to be about 145 ppb. Figures 6-6, 6-7 and 6-8 show TCE concentration contours after 10, 20, 30 years of pumping, respectively. These figures show that the groundwater downgradient of the Logistics Center should be remediated in 10 to 20 years. The groundwater beneath the Logistics Center should be remediated in about 30 years.

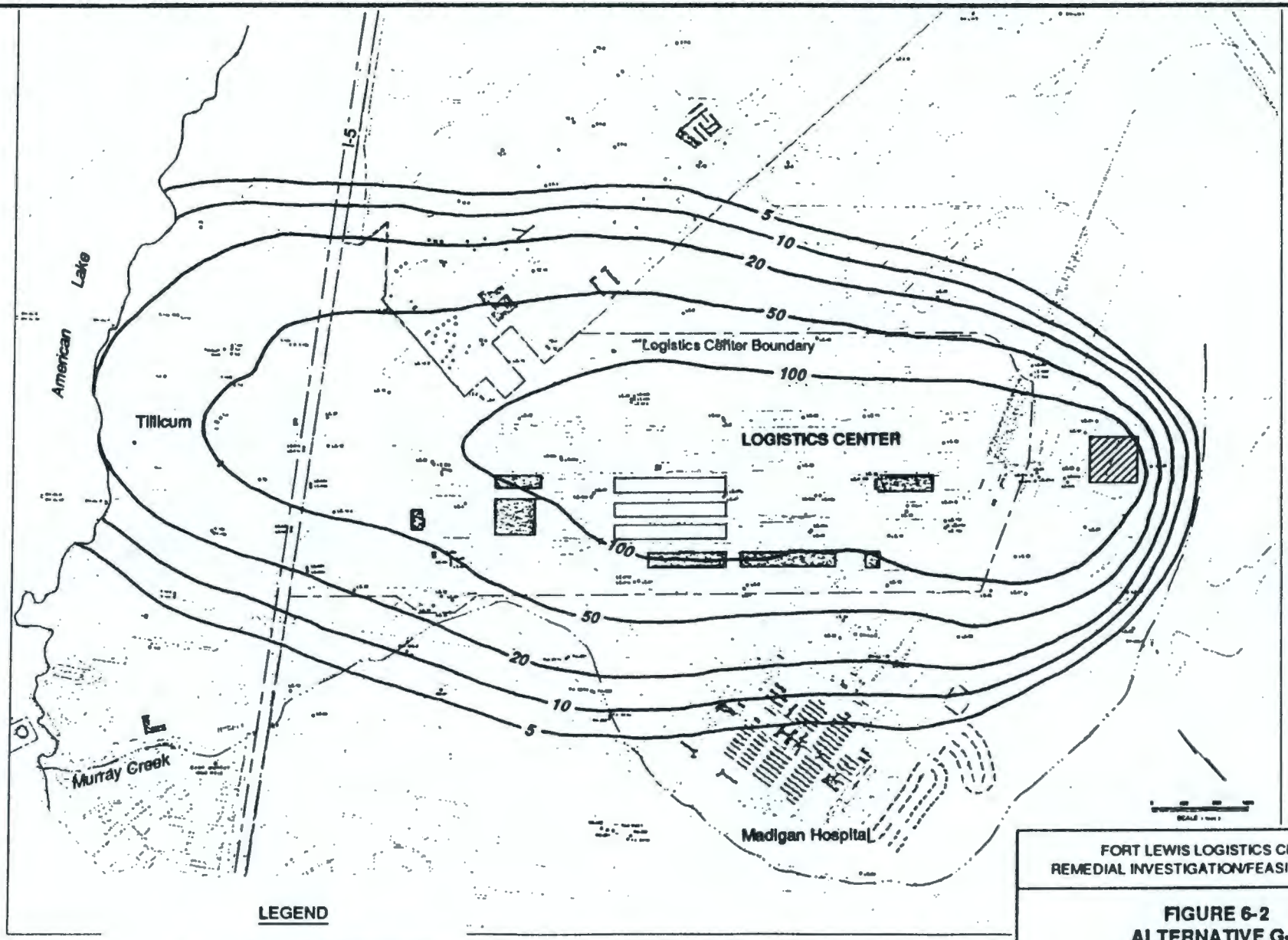

LEGEND

5 — Equal TCE Concentration Contours at 5, 10, 20, 50, and 100 ppb

TCE Source Area

NOTE

Contours are the simulated result of TCE injection at Source Area for 42 years.

FORT LEWIS LOGISTICS CENTER
REMEDIAL INVESTIGATION/FEASIBILITY STUDY

FIGURE 6-2
ALTERNATIVE G-2
TCE CONCENTRATION
AT START OF PUMPING

Section No.
Revision No.
Revision Date
Page of

envirosphere company
In Association with
SHANNON & WILSON

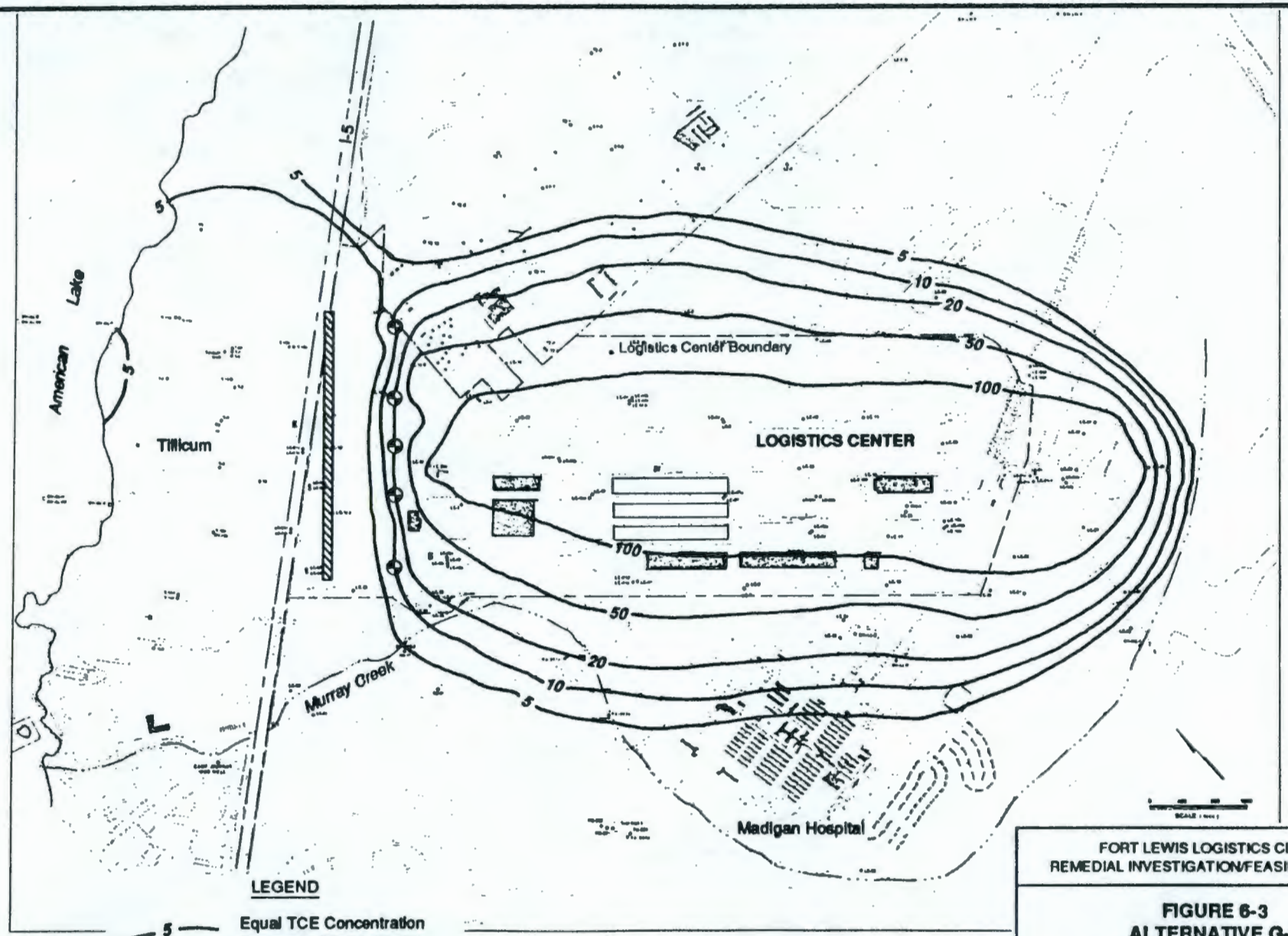

LEGEND

5 — Equal TCE Concentration Contours at 5, 10, 20, 50, and 100 ppb

Pumping Center at 1000 gpm

Recharge Trench

NOTE

TCE injection at Source Area continues during remediation.

FORT LEWIS LOGISTICS CENTER
REMEDIAL INVESTIGATION/FEASIBILITY STUDY

FIGURE 6-3
ALTERNATIVE G-2
TCE CONCENTRATION
AFTER 10 YEARS OF PUMPING

Section No.
Revision No.
Revision Date
Page of

envirosphere company
In Association with
SHANNON & WILSON

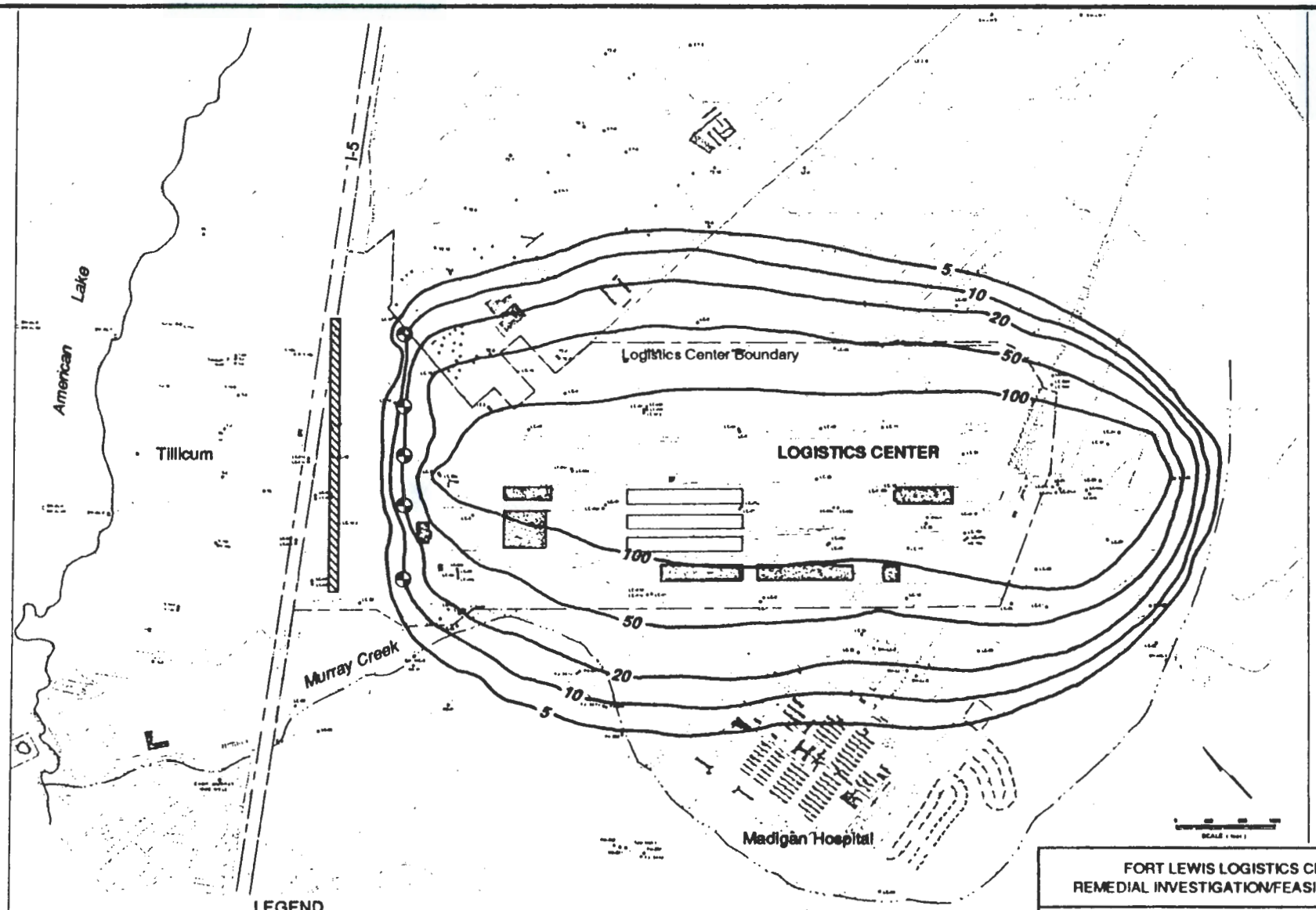

LEGEND

5 — Equal TCE Concentration Contours at 5, 10, 20, 50, and 100 ppb

Pumping Center at 1000 gpm

Recharge Trench

NOTE

TCE injection at Source Area continues during remediation.

FORT LEWIS LOGISTICS CENTER
REMEDIAL INVESTIGATION/FEASIBILITY STUDY

FIGURE 6-4
ALTERNATIVE G-2
TCE CONCENTRATION
AFTER 20 YEARS OF PUMPING

Section No.
Revision No.
Revision Date
Page of

envirosphere company
In Association with
SHANNON & WILSON

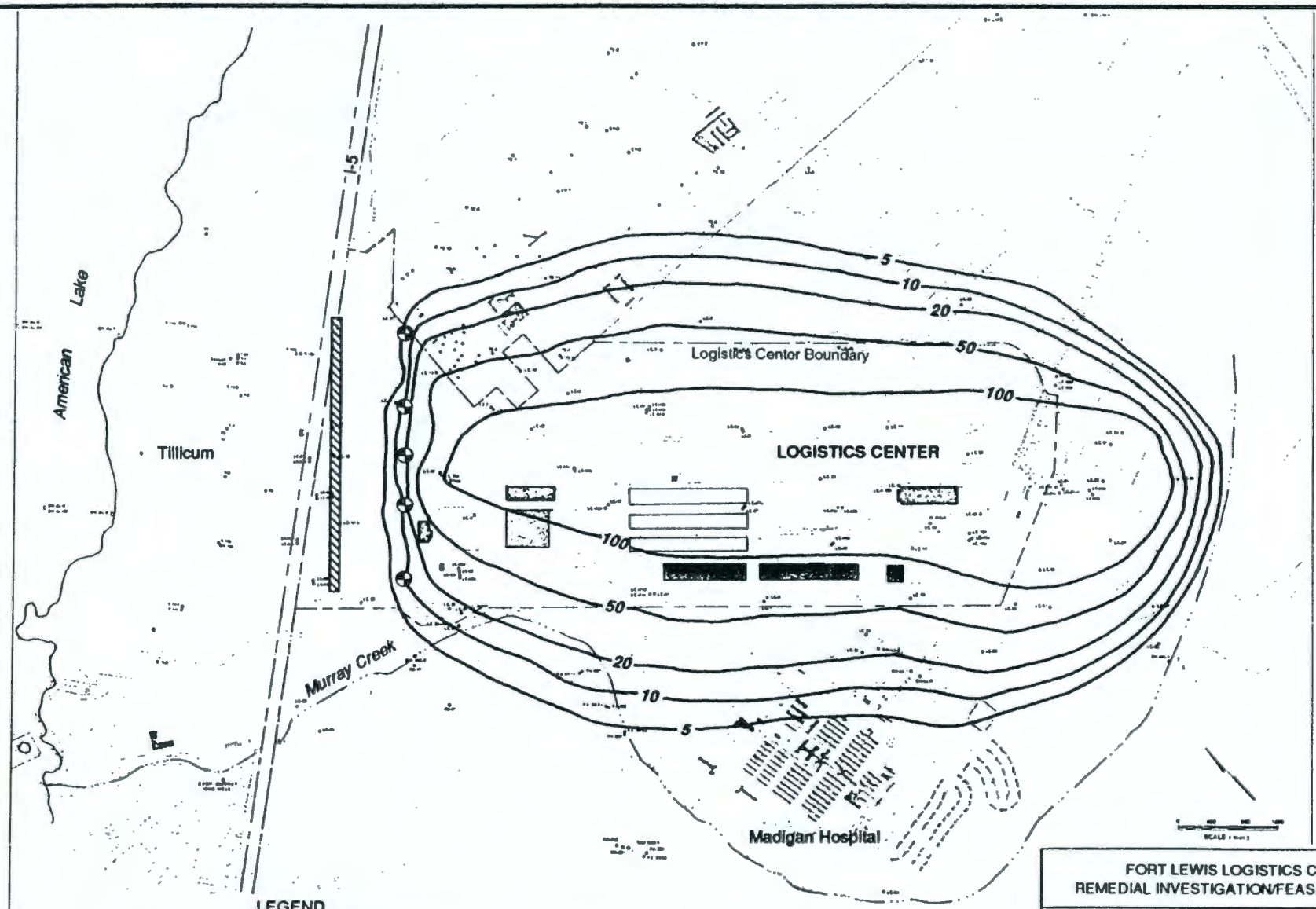

LEGEND

5 — Equal TCE Concentration Contours at 5, 10, 20, 50, and 100 ppb

Pumping Center at 1000 gpm

Recharge Trench

NOTE

TCE Injection at Source Area continues during remediation.

FORT LEWIS LOGISTICS CENTER
REMEDIAL INVESTIGATION/FEASIBILITY STUDY

FIGURE 6-5
ALTERNATIVE G-2
TCE CONCENTRATION
AFTER 30 YEARS OF PUMPING

Section No.
Revision No.
Revision Date
Page of

envirosphere company
In Association with
SHANNON & WILSON

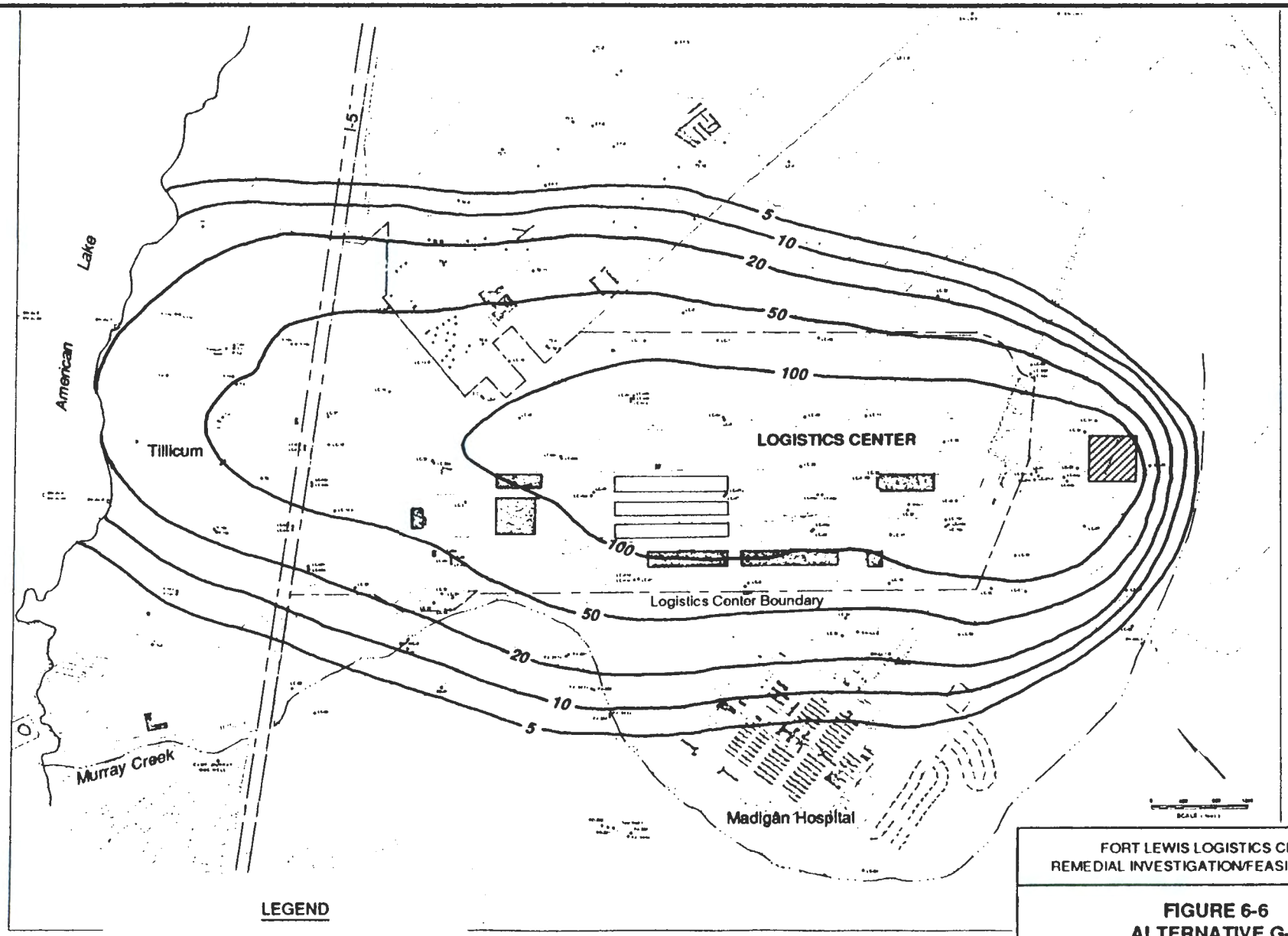

LEGEND

5 — Equal TCE Concentration Contours at 5, 10, 20, 50, and 100 ppb

TCE Source Area

NOTE

Contours are the simulated result of TCE injection at Source Area for 42 years.

FORT LEWIS LOGISTICS CENTER
REMEDIAL INVESTIGATION/FEASIBILITY STUDY

FIGURE 6-6
ALTERNATIVE G-3
TCE CONCENTRATION
AT START OF PUMPING

Section No.
Revision No.
Revision Date
Page of

envirosphere company
In Association with
SHANNON & WILSON

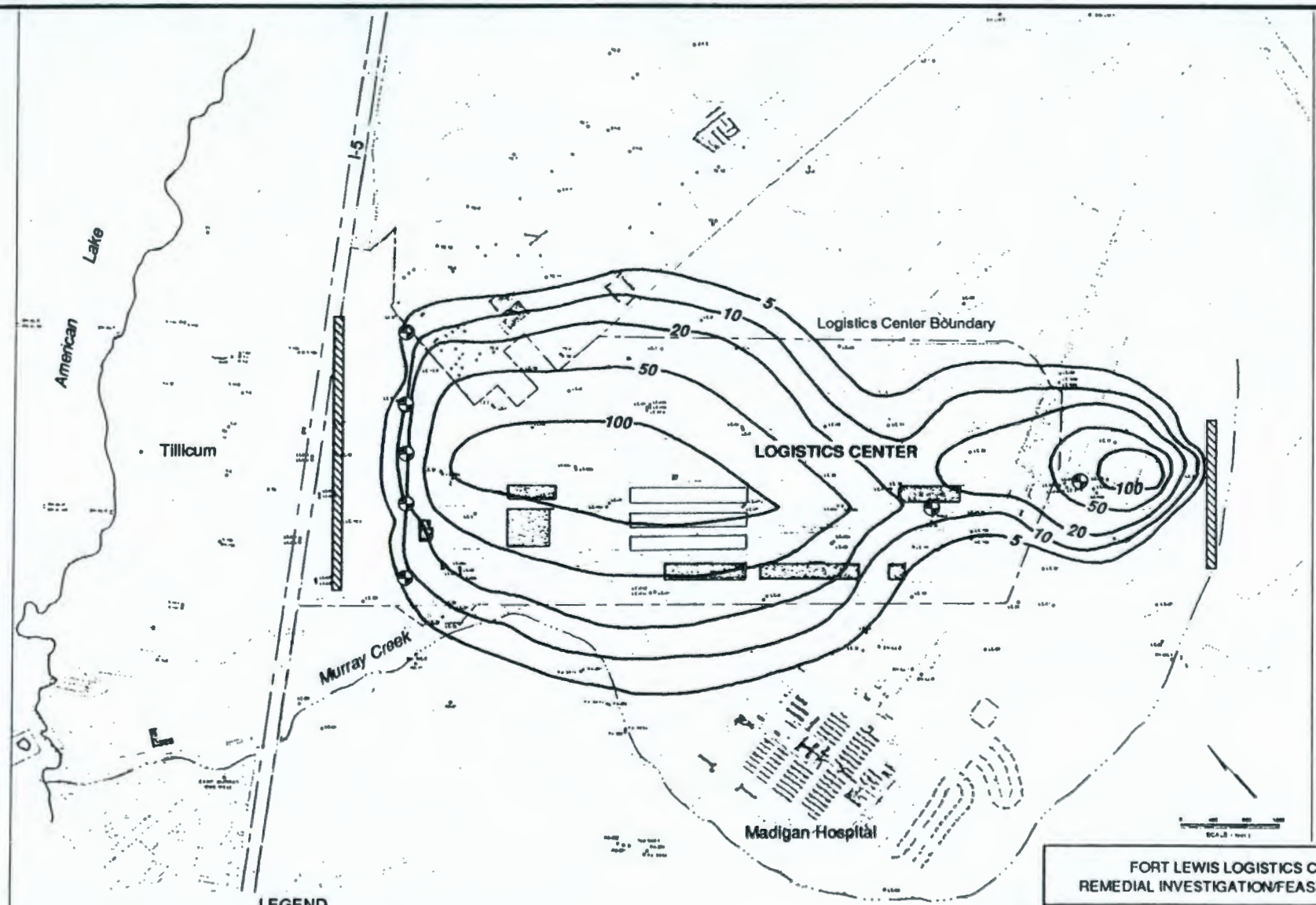

FORT LEWIS LOGISTICS CENTER
REMEDIAL INVESTIGATION/FEASIBILITY STUDY

FIGURE 6-7
ALTERNATIVE G-3
TCE CONCENTRATION
AFTER 10 YEARS OF PUMPING

Section No.
Revision No.
Revision Date
Page of

envirosphere company
In Association with
SHANNON & WILSON

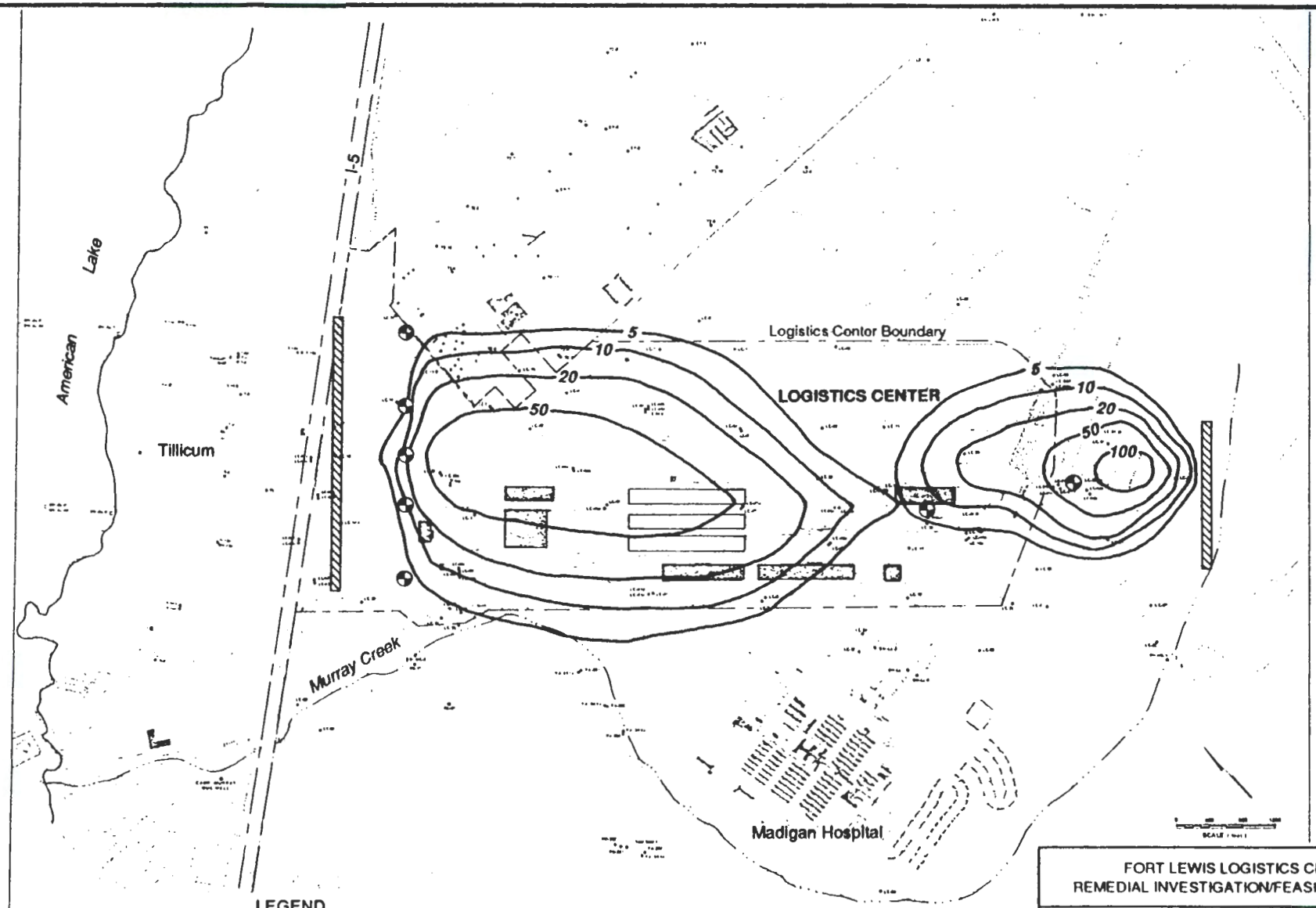

LEGEND

5 — Equal TCE Concentration Contours at 5, 10, 20, 50, and 100 ppb

Pumping Center at 1000 gpm

Recharge Trench

NOTE

TCE injection at Source Area continues during remediation.

FORT LEWIS LOGISTICS CENTER
REMEDIAL INVESTIGATION/FEASIBILITY STUDY

FIGURE 6-8
ALTERNATIVE G-3
TCE CONCENTRATION
AFTER 20 YEARS OF PUMPING

Section No.
Revision No.
Revision Date
Page of

envirosphere company
In Association with
SHANNON & WILSON

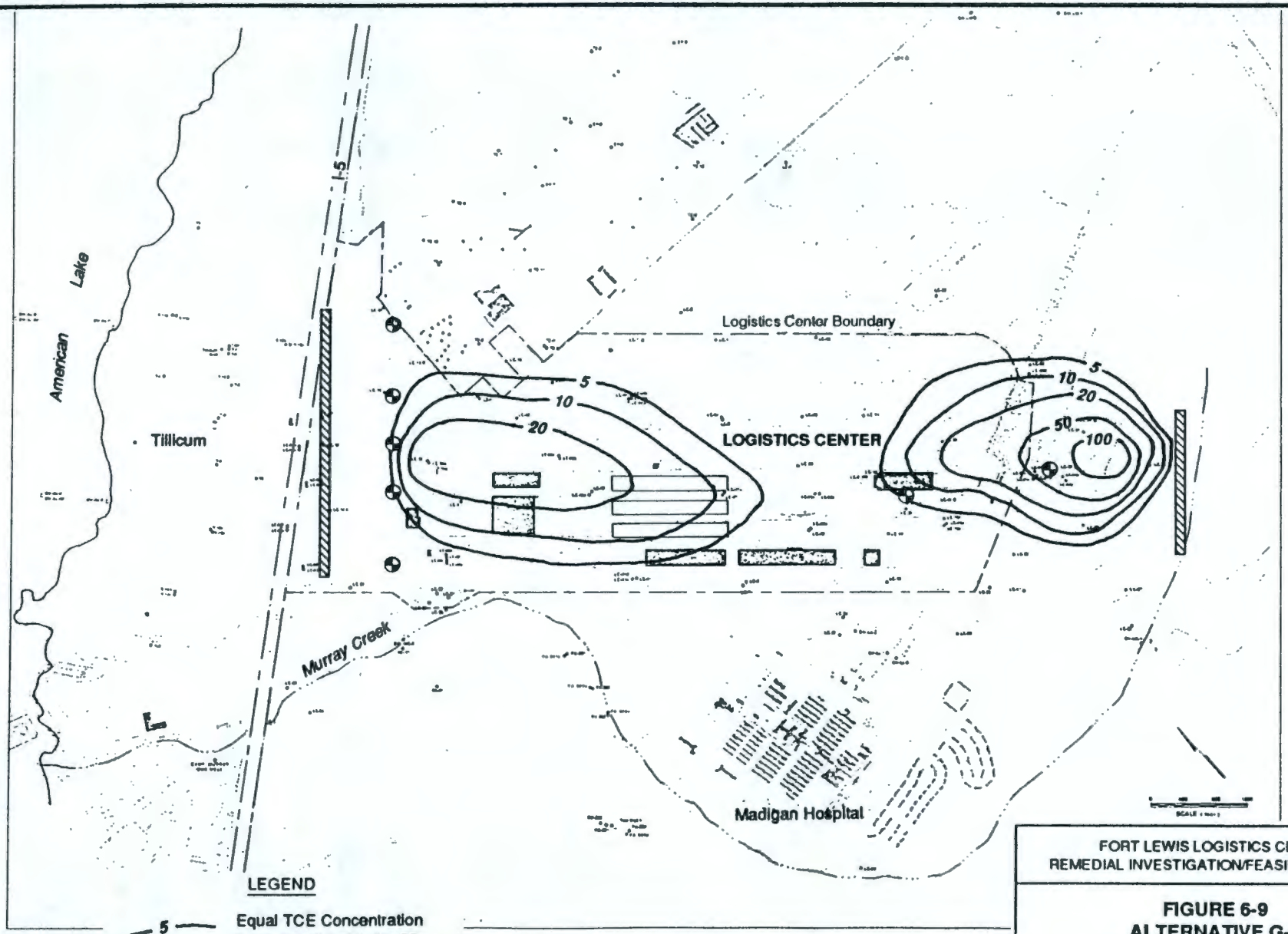

LEGEND

5 — Equal TCE Concentration Contours at 5, 10, 20, 50, and 100 ppb

Pumping Center at 1000 gpm

Recharge Trench

NOTE

TCE injection at Source Area continues during remediation.

FORT LEWIS LOGISTICS CENTER
REMEDIAL INVESTIGATION/FEASIBILITY STUDY

FIGURE 6-9
ALTERNATIVE G-3
TCE CONCENTRATION
AFTER 30 YEARS OF PUMPING

Section No.
Revision No.
Revision Date
Page of

envirosphere company
In Association with
SHANNON & WILSON

6.3 DESCRIPTION OF "NO ACTION" ALTERNATIVE G-1

This section describes the "No Action" scenario. Groundwater monitoring will be performed as part of the "No Action" scenario. Groundwater monitoring is conducted to gauge the further spread of contamination. The groundwater monitoring program described in this section will also be implemented in conjunction with each of the three alternatives discussed in subsequent sections of this report.

As described in Section 6.2, the length of time required to meet the remedial action goals cannot be predicted because there is no way of verifying whether releases to the aquifer are still occurring or how long releases will continue to occur. However, the modeling does show that if the releases are assumed to remain constant for the next 30 years at the level that was found to predict the current concentration profile at the site, the lateral extent of the plume will not change significantly.

6.3.1 Groundwater Monitoring

During the Remedial Investigation (RI), 33 groundwater monitoring wells were installed to complete an existing network of 96 wells that had been installed prior to commencement of this evaluation. The "No Action" alternative for groundwater remediation refers to the implementation of continued groundwater monitoring using selected wells from this extensive network. However, no action to remediate existing levels of TCE and DCE contamination in the groundwater beneath the Fort Lewis Logistics Center would be implemented in this alternative.

Groundwater monitoring was assumed to consist of sampling 26 wells for TCE and DCE. This number of wells is an approximation used to estimate the cost of monitoring and does not constitute the final monitoring plan. This number of wells was based on the assumption that twenty wells will be needed to monitor the unconfined aquifer and six wells will be needed to monitor the lower aquifer. The exact number and location of wells will be determined during remedial design when the

monitoring plan is developed. As discussed in Section 5.2, an additional four wells will be needed to sample around the source areas. The cost of the four additional wells is included as part of the soil alternatives. Wells not used for monitoring will be abandoned in accordance with Washington State Regulations WAC 173-160-405 and WAC 173-160-560.

Groundwater samples will be collected quarterly for the first two years. For the subsequent 28 years, semi-annual sampling will be conducted. The total cost of dispatching the sampling crew, implementing the approved sampling procedures, administering quality control, transporting the samples to the analytical laboratory, handling of blank, split and duplicate samples, maintaining quality assurance oversight over the analytical laboratory, conducting the analyses, and reporting the results are assumed on a sample-by-sample basis. For the purpose of this estimate these costs are assumed to be $310.00/sample including sampling, analysis, and data reporting.

6.3.2 Residual Risk

The main pathways associated with exposure to groundwater contamination are ingestion of drinking water, dermal contact (e.g., bathing), and inhalation during showering or from other domestic uses. In addition, swimming in American Lake, consuming fish from American Lake, swimming in Murray Creek, and consuming fish from Murray Creek are pathways affected by groundwater contamination since these bodies of water are fed by groundwater. Only two pathways were found to contribute significantly to the risk. These are drinking water ingestion and inhalation from domestic uses. Since this alternative does not change contaminant concentrations or exposure, there will be no change from the risks predicted in the baseline risk assessment (see Tables 1-6 and 1-7). The cumulative cancer risk to on-post workers exposed to TCE in

groundwater ranges from 1.2×10^{-6} to 1.7×10^{-3}. The cumulative hazard index to on-post workers resulting from exposure to DCE in groundwater ranges from 1.2×10^{-2} to 1.3×10^{-1}.

6.3.3 Estimated Cost

The rough order of magnitude (ROM) costs for the No Action scenario are provided on Table 6-1. No additional capital costs for the wells have been assumed. All sampling and analysis costs are detailed as operating costs.

6.4 DESCRIPTION OF GROUNDWATER EXTRACTION ALONG I-5, AIR STRIPPING, AND RECHARGE (ALTERNATIVE G2)

This remediation alternative consists of the extraction of contaminated groundwater at the downgradient Logistics Center boundary, above-ground treatment of the water, and reinjection of the treated water downgradient of the extraction point. In addition, a groundwater monitoring program and institutional actions to prevent ingestion of contaminated water will be implemented. The intent of the alternative is to halt the movement of contaminated groundwater off-site. This will result in the cleanup of the groundwater beneath Tillicum since the remaining contamination will be flushed into American Lake where the concentration will be reduced by dispersion and volatilization from the lake surface. The alternative will not actively remediate the groundwater within the Logistics Center.

6.4.1 Action-Specific ARARs

As described in Section 1.6, implementation of this alternative is subject to the following regulations:

- <u>WDOE Air Quality Regulations</u> - All substantive portions of the General Regulations for Air Pollution Sources (WAC 173-400) and the Ambient Air Quality Standard for Particulate Matter (WAC 173-470) must be met in order to obtain approvals.

TABLE 6-1

ROUGH ORDER OF MAGNITUDE COST (+50%, -30%) OF
"NO ACTION" ALTERNATIVE G1

Item	Cost
Capital Costs	
N/A	0
Operating Costs	
Quarterly sampling for first 2 years (4 sampling events @ $8,060/event)	$32,240/year
Semi-annual sampling for remaining 28 years (2 sampling events @ $8,060/event)	$16,120/year
Net Present Worth (i = 10%, n = 30 years)	$180,000
Net Present Worth (i = 4%, n = 30 years)	$309,000

- Hazardous Waste Generator Permit - The Washington Department of Ecology is the lead agency for issuing this permit under the state regulations (WAC 173-303). A permit would be required for the generation of spent acid during acid washing of the air strippers.

- State Waste Discharge Permit - A permit would not be required for recharging the treated groundwater to the ground, but the substantive requirements of the permit must be met. Since the MCL for the carcinogen TCE is 5.0 ppb, then the allowable "Early Warning" Groundwater Quality Standard limit is 10% of the MCL or 0.5 ppb. The 0.5 ppb limit will apply either at the Logistics Center property line or 100 feet downgradient of the drainfield, whichever is more conservative.

- Water Rights Permit - A Water Rights Permit would not be required, but the substantive requirements of the permit must be met.

- Land Disposal Restrictions - The reinjection of treated groundwater into or above an underground source of drinking water must comply with RCRA. If the three criteria of RCRA section 3020(b) are met (see Section 1.6.2.10) and the MCLs are met, reinjection of treated contaminated groundwater may occur. This alternative will meet all of the requirements; therefore, reinjection may be permitted.

6.4.2 Access Restrictions

An ordinance will be negotiated with Pierce County Department of Planning and Development for properties held by private individuals and corporations outside of the limits of the Fort Lewis Logistics Center. The effect of the ordinance would be to restrict landowners from using existing wells for extracting water for potable use. Irrigation and lawn watering would be allowed. The use of the well water for livestock would also be restricted. This action represents the legitimate use of the police powers of the state (in this case, Pierce

County) to protect the public from harm. The specific conditions of this ordinance would be subject to the requirements imposed by Pierce County, including any exactions (negotiated compensatory payments) for administering and enforcing the ordinance.

6.4.3 Groundwater Monitoring

An extensive groundwater monitoring program would be conducted in accordance with 40 CFR 264, Subpart F. The monitoring program would be identical to that proposed for the "No Action" alternative in Section 6.3.1.

6.4.4 Pre-Construction Activities

The air stripping vendor will perform a bench-scale treatability study to obtain information to design the air stripper. A pilot-scale treatability study will not be required for the air stripper, since air stripping is a well-developed technology. However, a pump test will be required to obtain engineering data for the design of the extraction and recharge systems. Since the contaminated water cannot be recharged without treatment, a pilot-scale treatment system is required to treat the water prior to recharge during the pump test.

6.4.5 Extraction System

Installation of the extraction system will be straightforward, requiring only standard construction practices. The groundwater extraction system will consist of a 3,500 foot long line of deep large-yield wells extending across the Logistics Center, parallel to and about 1,000 feet to the south of I-5. The location of the extraction wells is shown on Figure 6-10. Modeling results have indicated that the removal of about 5,000 gpm in this area is necessary

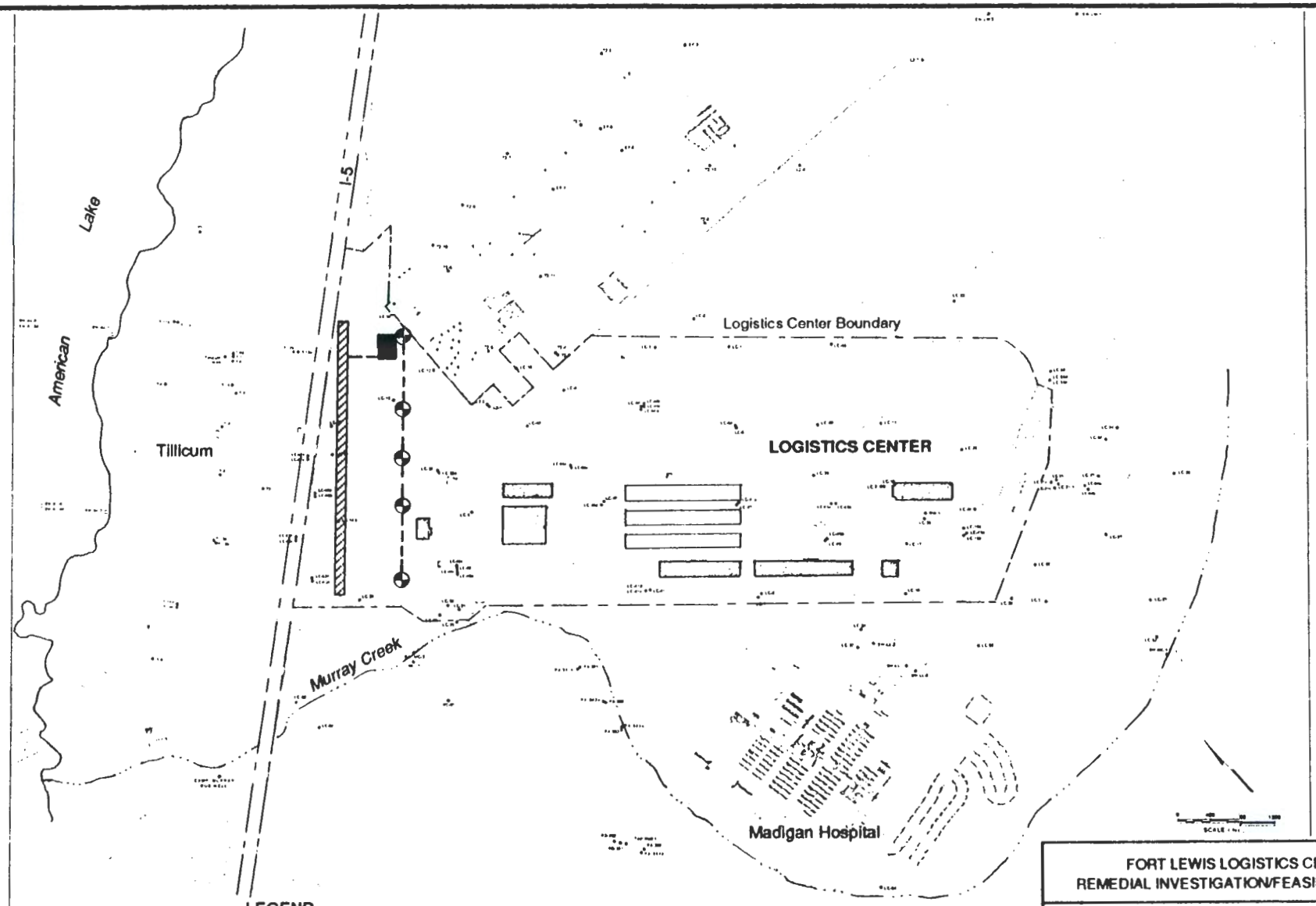

LEGEND

- Pumping Well Center at 1000 gpm
- Pipeline
- Treatment Plant
- Recharge Trench

NOTE

Each well center represents a cluster of three wells, each yielding 330 gpm.

FORT LEWIS LOGISTICS CENTER
REMEDIAL INVESTIGATION/FEASIBILITY STUDY

FIGURE 6-10
PLAN VIEW OF EXTRACTION AND RECHARGE SYSTEM FOR ALTERNATE G-2

Section No.
Revision No.
Revision Date
Page of

envirosphere company
In Association with
SHANNON & WILSON

to stop the movement of contaminants out of the Logistics Center (see Section 6-2). It is estimated that average yields of about 330 gpm per well can be expected from wells developed in this aquifer. Therefore, it will be necessary to install 15 extraction wells, spaced at about 200-foot intervals to achieve the remedial goal. A pump test will be performed to verify that a yield of 330 gpm can be achieved (see Section 6.4.4).

Each well will extend to a depth of about 100 feet to fully penetrate the contaminated zone. The recommended design for the extraction wells is shown in Figure 6-11. Each well will be drilled using a 12-inch diameter casing to the target depth. A 12-inch telescoped stainless steel well screen assembly will be designed and installed in the main water bearing zones. More than one zone may be screened in each well. Design parameters such as screen length, screen location, and screen slot size will be determined at the time of drilling. For this conceptual design, it is estimated that 30 feet of well screen will be installed in each well.

Each well will be fitted with a 20-hp electric submersible pump to withdraw the water and move it to the treatment plant. The design life of each pump is estimated at 10 years. Thus, in addition to periodic maintenance, these pumps will require replacement approximately once every 10 years.

A 16" ductile iron pipe will connect the extraction wells to the treatment plant. The distance to the treatment plant is estimated to be 3,300 feet. The pipe will be laid in a trench on top of compacted sand fill. Select backfill will be used to fill the remaining void in the trench. A cross-section of the trench is shown in Figure 6-12. The pipe will be installed at a grade that will allow gravity flow of the water to the treatment plant.

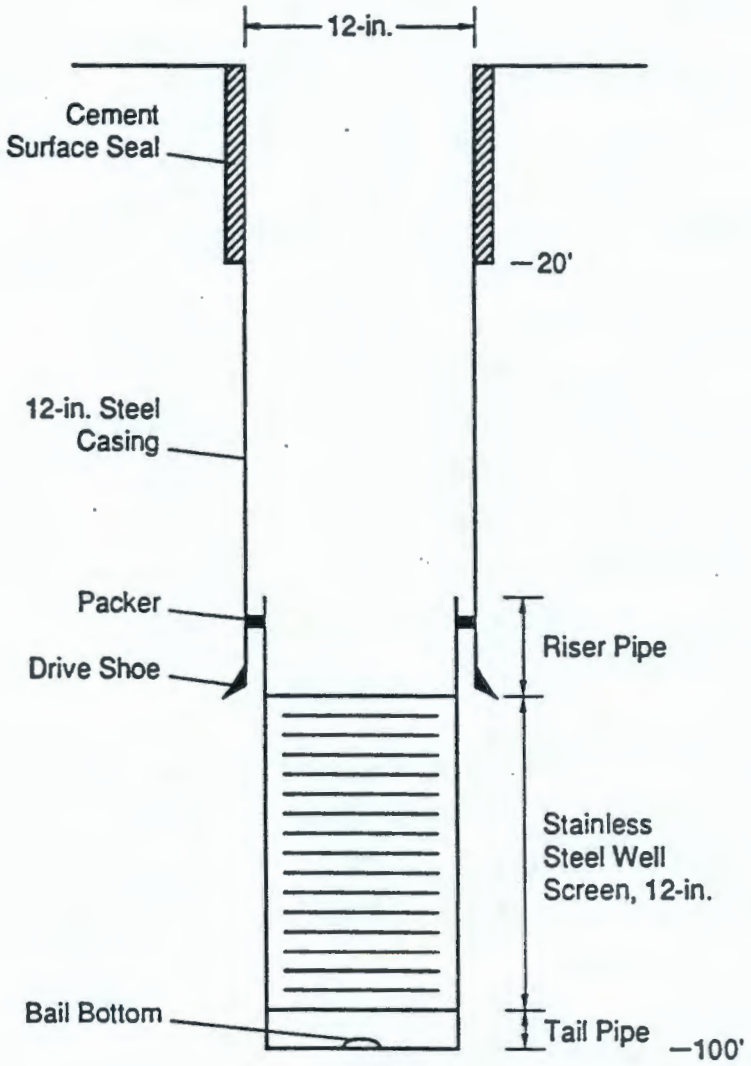

FORT LEWIS LOGISTICS CENTER
REMEDIAL INVESTIGATION/FEASIBILITY STUDY

FIGURE 6-11
FORT LEWIS EXTRACTION WELL
PROPOSED DESIGN

Section No. Revision No. Revision Date Page of	envirosphere company In Association with SHANNON & WILSON

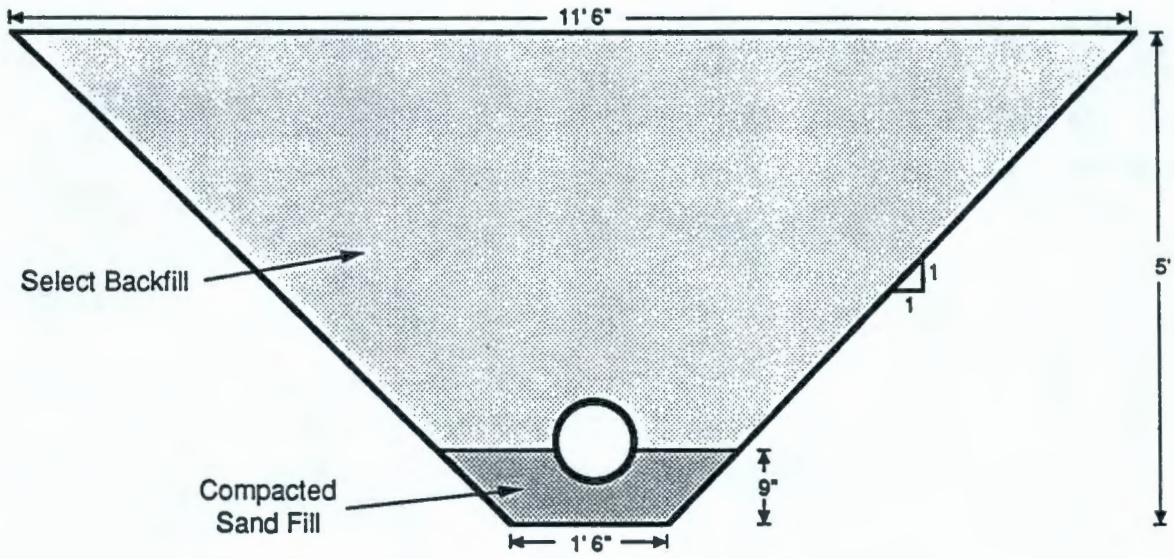

FORT LEWIS LOGISTICS CENTER
REMEDIAL INVESTIGATION / FEASIBILITY STUDY

FIGURE 6-12
CROSS SECTION OF PIPE TRENCH

Section No.
Revision No.
Revision Date:
Page of

envirosphere company
In Association with
SHANNON & WILSON

6.4.6 Treatment System

A flow diagram for the air stripping system is shown in Figure 6-13, and the design criteria and design values are presented in Table 6-2. Groundwater from the extraction wells is pumped to the 10,000 gallon flow equalization tank and is then pumped directly to two air stripping towers at a rate of 5,000 gpm. The concentration of the TCE in the inlet to the air stripper is 70 ppb. This value is based on the results of the groundwater modeling (see Section 6.2). In the air stripping towers, the concentration of TCE in the groundwater is reduced from 70 ppb to 0.5 ppb. The volatilized TCE will be discharged with the air to the atmosphere, and the treated groundwater will drain into two sumps. From the sumps, the treated groundwater will be pumped to the recharge system (see Section 6.4.7).

Two 12-foot diameter air stripping towers are required to handle the 5,000 gpm flowrate, and 25 feet of packing and a 50:1 air-to-water ratio are required to reduce the TCE concentration in the water from 70 ppb to below 0.5 ppb (Calgon 1989). Approximately 2.09 lbs/day of TCE would be emitted from each column.

Installation of the treatment system will be straightforward. Prefabricated air strippers and tanks are readily available from many vendors for ease of construction. In addition, standard construction practices may be used for installation of the sumps. Operation and maintenance of the treatment system will also be straightforward. One workday/week will be required for operation and maintenance. Periodic equipment inspection will be required in addition to normal maintenance. Two fans and two pumps will require periodic maintenance and replacement, and the air stripping columns will require flushing approximately once a year to prevent buildup of precipitates and bacteria. (Since this operation generates spent acid, a hazardous waste generator permit from WDOE will be required). Effluent from the air strippers will also have to be monitored monthly, and the results of this monitoring will have to be reported.

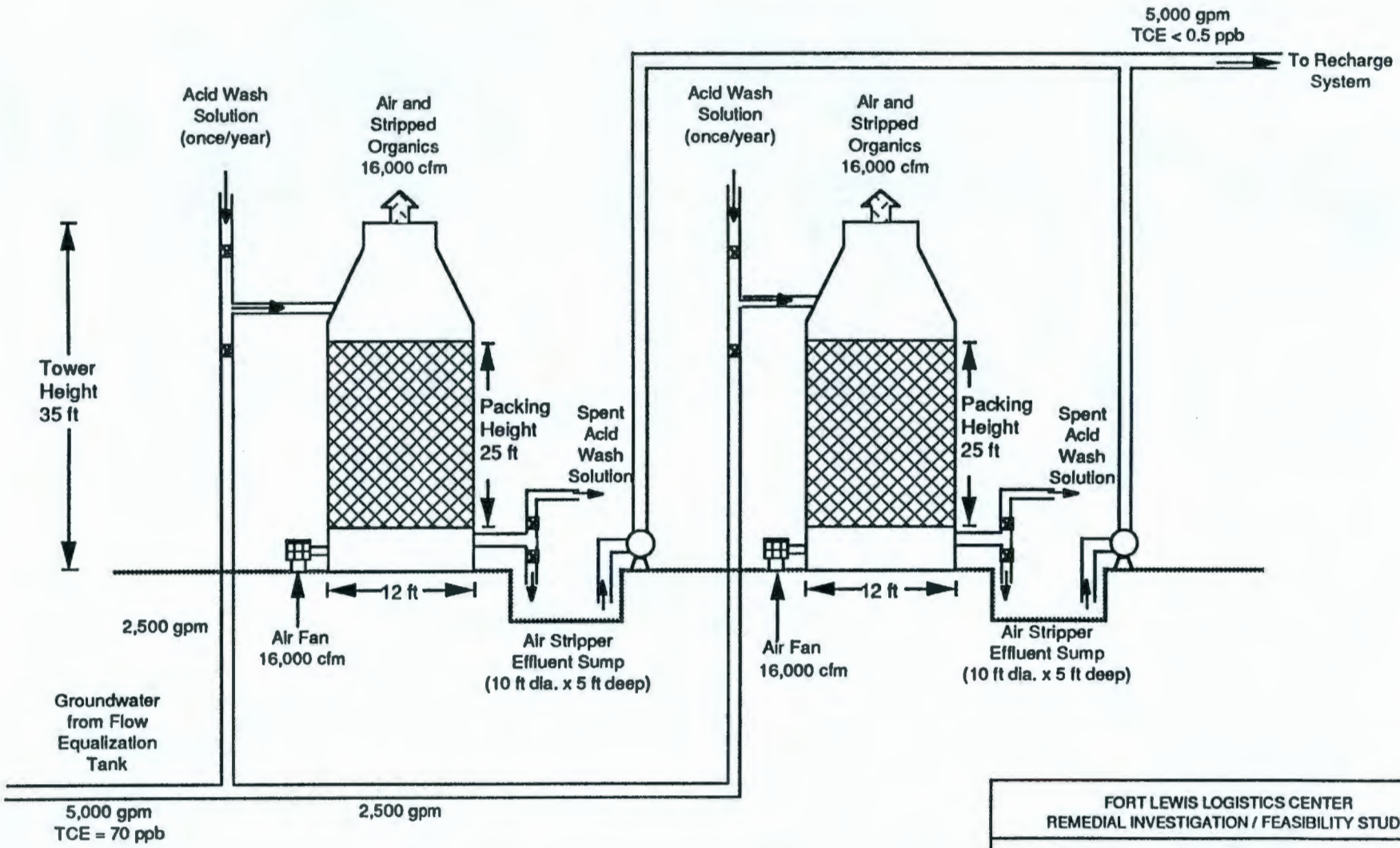

FORT LEWIS LOGISTICS CENTER
REMEDIAL INVESTIGATION / FEASIBILITY STUDY

FIGURE 6-13
ALTERNATIVE G2 TREATMENT SYSTEM

Section No.
Revision No.
Revision Date:
Page of

envirosphere company
In Association with
SHANNON & WILSON

TABLE 6-2

DESIGN CRITERIA AND DESIGN VALUES FOR TREATMENT SYSTEM FOR GROUNDWATER EXTRACTION ALONG I-5

Item	Value
Design Criteria	
Design Flowrate[1/]	5,000 gpm
Inlet Concentration[1/]	
TCE	70 ppb
DCE	7 ppb
Outlet Concentration	
TCE	0.5 ppb
DCE	Already meets objective of less than 20% of the RMCL
Design Values	
Number of Flow Equalization Tanks	1
Capacity of Flow Equalization Tank	10,000 gallon
Number of Air Stripper Units	2
Air Stripper Diameter	12 ft
Air Stripper Height	35 ft
Packing Height	25 ft
Air-Liquid Ratio	50:1
Air Flowrate	16,000 cfm/column
Liquid Loading	22 gpm/ft^2
Number of Sumps	2
Air Stripper Effluent Sump Dimensions	10 ft dia. x 5 ft deep

1/ Based on the results of the groundwater modeling (see Section 6.2)

6.4.7 Recharge System

Following treatment of the groundwater, the water will be pumped through a 1,000-foot-long 14" ductile iron pipe to the recharge system. Ductile iron was chosen over HDPE or other plastic material because it is stronger and more durable. In addition, the anticipated life-span of ductile iron pipe is at least 50 years. The recharge system will be located about 300 feet south of I-5 (see Figure 6-10). This is downgradient and parallel to the line of extraction wells. The recharge system will consist of the distribution line, distribution branches, and the perforated pipe from which the groundwater drains. The distribution system consists of a 3,500-foot-long distribution line (12 inch diameter ductile iron pipe) which is connected to the perforated pipe by means of the distribution branches (12 inch diameter ductile iron pipe) located every 100 feet (see Figure 6-14). The 18" perforated pipe is laid at the bottom of a 10 foot deep trench and the distribution line is laid in the same trench five feet above the perforated pipe. The two pipes are connected by 36 distribution branches running vertically. The whole trench is backfilled with gravel to promote infiltration. A cross-section of the recharge trench is shown in Figure 6-15. Two duplex 265 hp pumps are used to overcome frictional losses in the pipes, but do not provide any additional head to inject water into the ground. The water flows from the holes in the perforated pipe by gravity.

Installation of the recharge system will be straightforward. Prior to installation, though, approval would be required from WDOE for recharging water to the ground. This should not present any difficulties, since the concentration of TCE (carcinogen) will be lower than 10% of the MCL and the concentration of DCE (noncarcinogen) will be lower than 20% of the RMCL.

Operation and maintenance of the recharge system will also be straightforward. The only components of the system which has moving parts are the two 265 hp pumps. These pumps will require periodic maintenance and replacement.

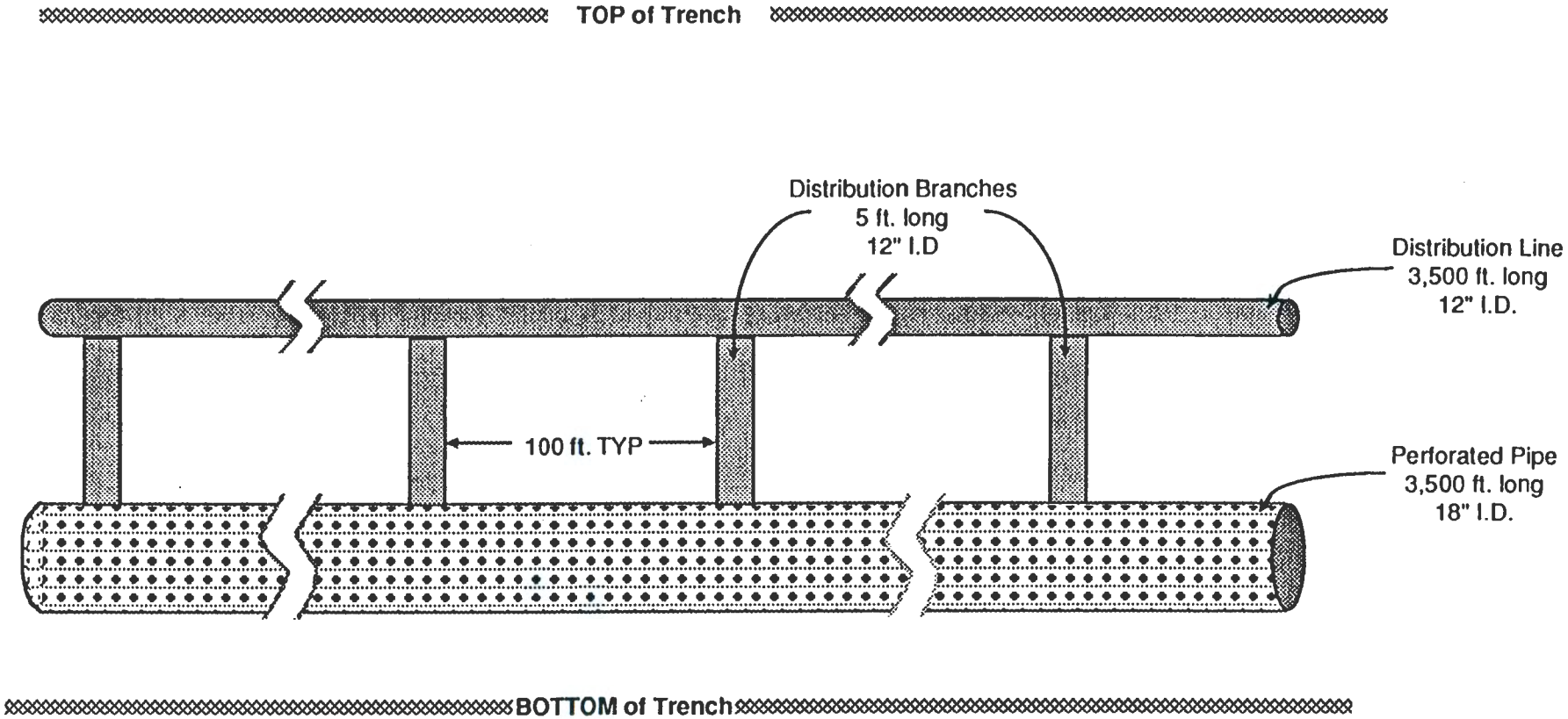

NOTE: NOT TO SCALE

FORT LEWIS LOGISTICS CENTER
REMEDIAL INVESTIGATION / FEASIBILITY STUDY

FIGURE 6-14
RECHARGE PIPING SCHEMATIC
FOR I-5 RECHARGE SYSTEM

Section No.
Revision No.
Revision Date:
Page of

envirosphere company
In Association with
SHANNON & WILSON

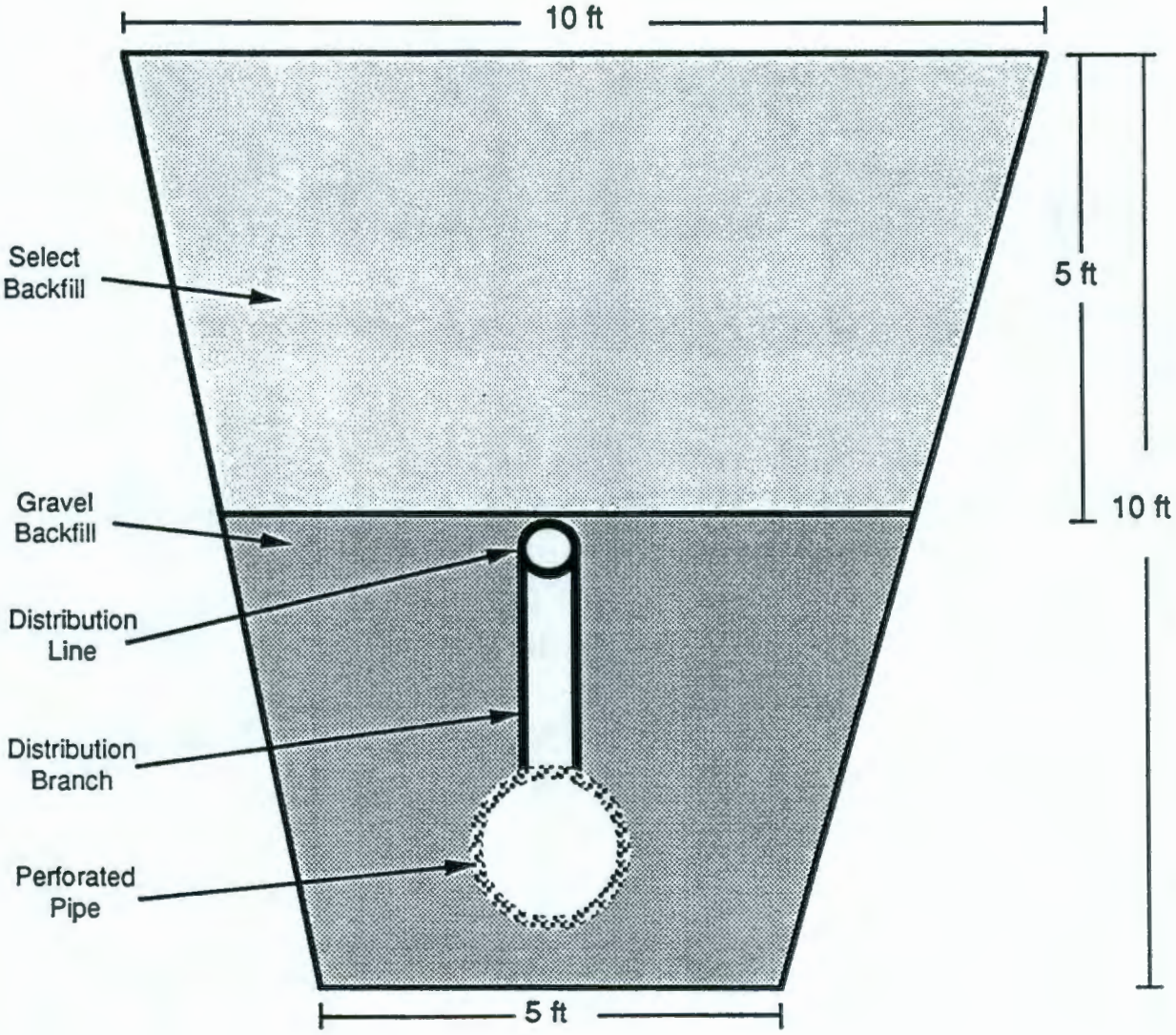

FORT LEWIS LOGISTICS CENTER
REMEDIAL INVESTIGATION / FEASIBILITY STUDY

FIGURE 6-15
RECHARGE TRENCH CROSS SECTION

Section No.
Revision No.
Revision Date:
Page of

envirosphere company
In Association with
SHANNON & WILSON

6.4.8 Public Protection and Worker Safety during Construction and Remediation

Air Quality Impacts of Air Stripper:

The worst-case ambient TCE concentrations caused by the air strippers is estimated at 0.053 ug/m^3 (see Figure 6-16). This concentration would result in less than a 10^{-6} risk to residents, and is therefore protective of human health (see Appendix H). The detailed modeling procedures used to arrive at the worst-case ambient concentrations are described in Appendix F. The modeling procedures are summarized as follows:

- The EPA-approved Industrial Sources Complex (ISC-LT) computer dispersion model was used to calculate the annual average impacts. It was assumed that the two air strippers would operate continuously at maximum capacity and that the influent TCE concentration was 70 ug/l, which is the maximum expected value.

- Annual average wind speed, wind direction, temperature, atmospheric stability, and mixing height were based on 27 years of data from McChord Air Force Base.

The emitted TCE would quickly degrade in the atmosphere to form nontoxic compounds. The estimated photo-oxidation rate of TCE in the atmosphere is 17 percent per day (Singh et al. 1982). At that rate the emitted TCE would be essentially destroyed by natural processes within ten days of release.

Worker Exposure:

Exposure to TCE during construction is most likely to occur during installation of the extraction wells. During all construction activities airborne concentrations of TCE can be monitored. If the

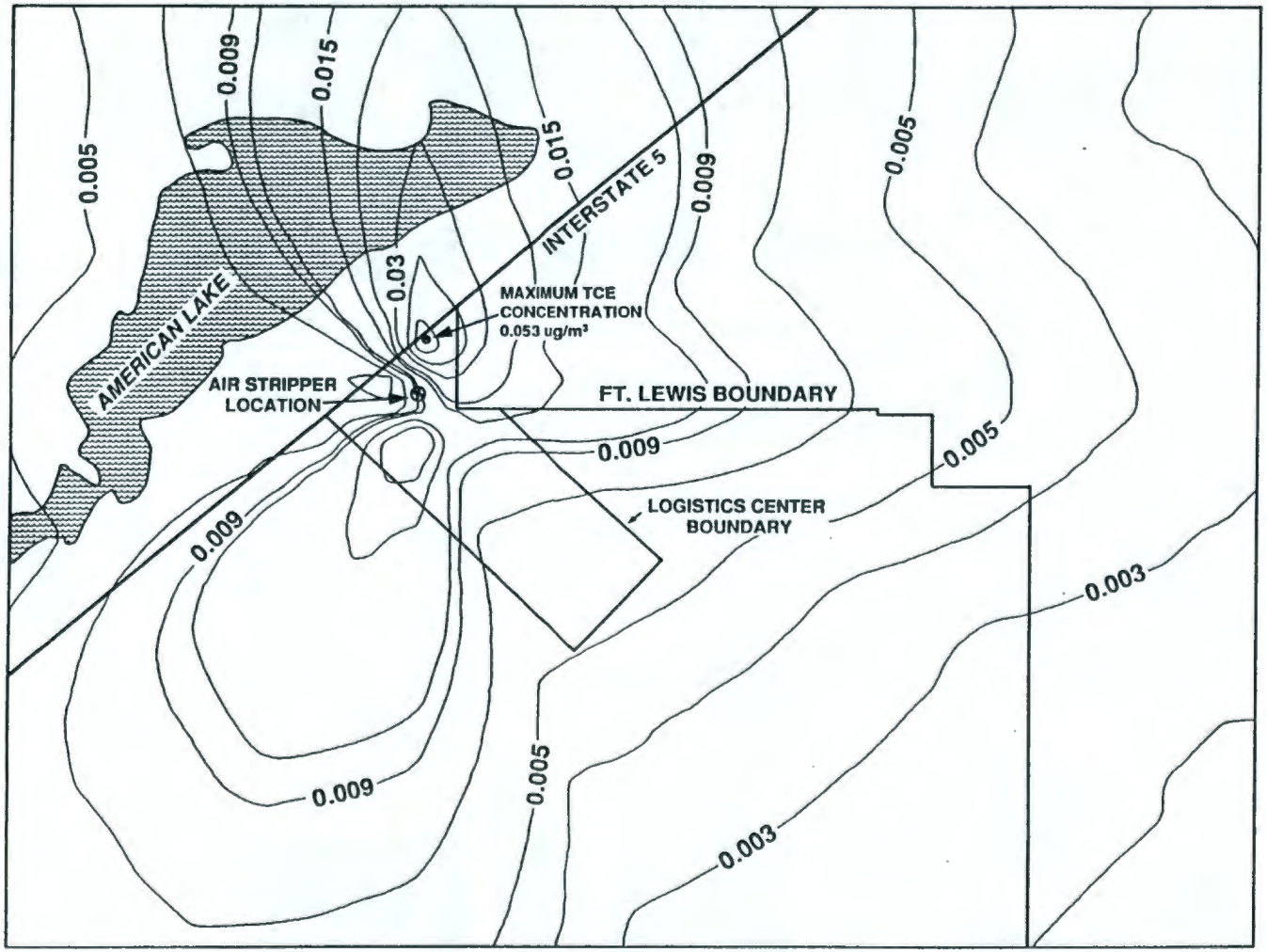

N

1000 METERS

FORT LEWIS LOGISTICS CENTER
REMEDIAL INVESTIGATION / FEASIBILITY STUDY

FIGURE 6 - 16
PREDICTED ANNUAL AVERAGE
AMBIENT TCE CONCENTRATIONS
(IN ug/m³) FOR ALTERNATIVE G-2

Section No:
Revision No:
Revision Date:
Page of

envirosphere company
In association with
SHANNON & WILSON

concentrations rise above the level of concern, remediation workers would wear respirators in addition to standard protective gear.

6.4.9 Residual Risk

The main pathways associated with exposure to groundwater contamination are ingestion of drinking water, dermal contact (e.g., bathing), and inhalation during showering or from other domestic uses. In addition, swimming in American Lake, consuming fish from American Lake, swimming in Murray Creek, and consuming fish from Murray Creek are pathways affected by groundwater contamination, since these bodies of water are fed by groundwater. Only two pathways were found to contribute significantly to the risk. These are drinking water ingestion and inhalation from domestic uses. The cancer risk to the current or potential future users of the aquifer due to exposure to trichloroethylene once the groundwater beneath Tillicum has been cleaned is estimated at 2.7×10^{-5} and the hazard index for dichloroethylene is 2.2×10^{-1} (see Table 1-11). Since this alternative does not change contaminant concentrations or exposures on post, there will be no change from the risks in the baseline risk assessment calculated for on-post workers. See Section 6.3.2 for a discussion of these risks.

6.4.10 Estimated Remediation Cost

The estimated ROM costs are shown on Tables 6-3 through 6-5. Capital costs are shown in Table 6-3, operating costs are shown in Table 6-4, and a summary of the costs including the net present worth is shown in Table 6-5. All costs are in January 1989 dollars. The air stripper costs are based on budget quotes from Calgon (Calgon 1989). Civil construction costs for the extraction system and disposal system are based on cost indices for the Seattle-Tacoma area.

TABLE 6-3

ROUGH ORDER OF MAGNITUDE (+50%, -30%)
CAPITAL COSTS FOR ALTERNATIVE G2

Item	Cost
Institutional Actions	
Ordinance Negotiations	$4,000
Restrictive Covenants for On-Site Properties	--- 1/
Pierce County Auditor's Office Fees	--- 1/
Pierce County Tax Assessor's Office Fees	--- 1/
Total - Institutional Actions	$4,000
Extraction System	
Pump Test	$ 70,000
Wells (15 @ $20,000/well)	300,000
Pumps, 20 hp (15 @ $5,000/pump)	75,000
Excavation (3,973 cu. yd. @ $5/cu. yd.)	20,000
Select Backfill (3,643 cu. yd. @ $5/cu. yd.)	18,000
Sand Bedding (185 cu. yd. @ $10/cu. yd.)	2,000
Pipe, 16" Ductile Iron (3,300 ft. @ $35/ft.)	115,000
Subtotal	$600,000
Engineering (Add 10%)	60,000
Indirect Costs (Add 15%)	90,000
Subtotal	750,000
Contingency (Add 20%)	150,000
Total - Extraction System	$900,000
Treatment System	
Flow Equalization Tank, 10,000 gallon	$10,000
Air Strippers including pumps and Fans (2 @ $175,000/Air Stripper)	350,000
Sump and Foundation	6,000
Subtotal	$366,000

7689K

TABLE 6-3 (Cont.)

ROUGH ORDER OF MAGNITUDE (+50%, -30%)
CAPITAL COSTS FOR ALTERNATIVE G2

Item	Cost
Engineering (Add 10%)	$37,000
Installation (Add 30%)	110,000
Freight (Add 7% of Air Stripper Cost)	25,000
Air Quality Licensing	15,000
Subtotal	$553,000
Contingency (Add 20%)	111,000
Total - Treatment System	$664,000
Recharge System	
Excavation (27,160 cu. yd. @ $5/cu. yd.)	$136,000
Select Backfill (14,067 cu. yd. @ $5/cu. yd.)	76,000
Sand Bedding (56 cu. yd. @ $10/cu. yd.)	1,000
Free Draining Gravel (12,627 cu. yd. $10/ cu. yd.)	126,000
Pipe, 12" Ductile Iron (3,680 ft. @ $25/ft)	92,000
Pipe, 14" Ductile Iron (1,000 ft. @ $31/ft)	31,000
Pipe, 18" Perforated (3,500 ft. @ $24/ft)	84,000
Pump, 265 HP (2 @ $92,000/pump)	184,000
Subtotal	$724,000
Engineering (Add 10%)	72,000
Indirect Costs (Add 15%)	109,000
Subtotal	$905,000
Contingency (Add 20%)	181,000
Total - Recharge System	$1,086,000
TOTAL CAPITAL COSTS	$2,654,000

1/ Costs for these activities have already been included in the costs for the soil alternatives. Therefore, these costs are not included here.

TABLE 6-4

ROUGH ORDER OF MAGNITUDE OPERATING COSTS
(+50%, -30%) FOR ALTERNATIVE G2

Item	Cost
Monitoring	
Quarterly Sampling - First 2 years (26 wells @ $310/well)	$32,240
Semi-Annual Sampling - 28 years (26 wells @ $310/well)	16,120
Extraction System	
Electricity (2,000,000 kwHr/year @ 5¢/kwHr)	$100,000
Equipment Maintenance	11,000
Labor Costs (1 manday/week @ $30/manhour)	12,000
Total	$123,000
Treatment System	
Electricity (1,636,000 kwHr/year @ 5¢/kwHr)	$82,000
Equipment Maintenance	11,000
Acid Washing (once/year)	10,000
Labor Costs (1 manday/week @ $30/manhour)	12,000
Effluent Monitoring (monthly)	3,000
Total	$118,000
Recharge System	
Electricity (1,734,000 kwHr/year @ 5¢/kwHr)	$87,000
Equipment Maintenance	14,000
Labor Costs (1 manday/week @ $30/manhour)	12,000
Total	$113,000
Total Operating Costs (Not Including Monitoring)	$354,000

TABLE 6-5

SUMMARY OF ROUGH ORDER OF MAGNITUDE COSTS
(+50%, -30%) FOR ALTERNATIVE G2

Item	Cost
Capital Costs	
Institutional Actions	$4,000
Extraction System	900,000
Treatment System	664,000
Recharge System	1,086,000
Total	$2,654,000
Operating Costs	
Monitoring	
First 2 years	$32,240
Remaining 28 years	16,120
Extraction System	123,000
Treatment System	118,000
Recharge System	113,000
Total (not including monitoring)	$354,000
Net Present Worth (including monitoring) (i=10%, n=30 years)	$6,171,000
Net Present Worth (including monitoring) (i = 4%, n = 30 years)	$9,084,000

6.5 DESCRIPTION OF COMBINED GROUNDWATER EXTRACTION ALONG I-5 AND NEAR SOURCE AREAS, AIR STRIPPING, AND RECHARGE (ALTERNATIVE G3)

This remediation alternative consists of extracting the contaminated groundwater at the Logistics Center boundary, above ground treatment of the water, and reinjection of the treated water downgradient of the extraction point (as described in Section 6.4). In addition, contaminated groundwater is extracted from near source areas downgradient of the source area with associated treatment and recharge. Separate treatment and recharge systems will be built for the I-5 extraction wells and the source area extraction wells. A groundwater monitoring program and institutional actions to prevent ingestion of contaminated groundwater will also be implemented. The monitoring program and institutional actions were described in Section 6.4, therefore a discussion of these actions is not repeated here.

6.5.1 Action-Specific ARARs

This alternative would be subject to the same regulations as Alternative G-2. These ARARs are described in Section 6.4.1.

6.5.2 Pre-Construction Activities

The air stripping vendor will perform a bench-scale treatability study to obtain information to design the air stripper. A pilot-scale treatability study will not be required for the air stripper since air stripping is a well-developed technology. However, a pump test will be required to obtain engineering data for the design of the extraction and recharge systems. Since the contaminated water cannot be recharged without treatment, a pilot-scale treatment system is required to treat the water prior to recharge during the pump test.

6.5.3 I-5 Extraction System

This groundwater extraction system is identical to the system described in Section 6.4.5. The extraction system consists of a line of 15 deep, large-yield wells extending across the Logistics Center, parallel to I-5, and about 1,000 feet to the south. The location of the extraction wells is shown on Figure 6-17. The wells will extend to a depth of about 100 feet to fully penetrate the contaminated zone. The water will be removed using electric submersible pumps and transferred through a piping system to the I-5 treatment facility. More details on this extraction system can be found in Section 6.4.5, and are thus not repeated here.

6.5.4 Source Area Extraction System

In addition to the line of wells near I-5 used to halt off-site migration, results from the groundwater modeling indicate extraction of groundwater just downgradient of the source areas at the East Gate Disposal Yard should remediate the entire groundwater plume. As discussed in Section 6.2, an extraction rate of 1,000 gpm would be required from each of two areas located northwest of the East Gate Disposal Yard. The location of these wells is shown on Figure 6-17. Since an average aquifer yield of about 330 gpm can be expected, each of the two areas would require the installation of 3 wells to effectively stop movement of contaminants from the source areas in the saturated zone. A pump test will be performed to verify that a yield of 330 gpm can be achieved (see Section 6.5.2).

The wells located near the source area will extend to a depth of about 80 feet to penetrate the contaminated zone. The wells will be constructed similar to the I-5 system (Figure 6-11), using 12-inch steel casing and a 12-inch telescoped stainless steel screen assembly. Each well will be equipped with a 20-hp electric submersible pump to withdraw the water and move it to the source area treatment plant.

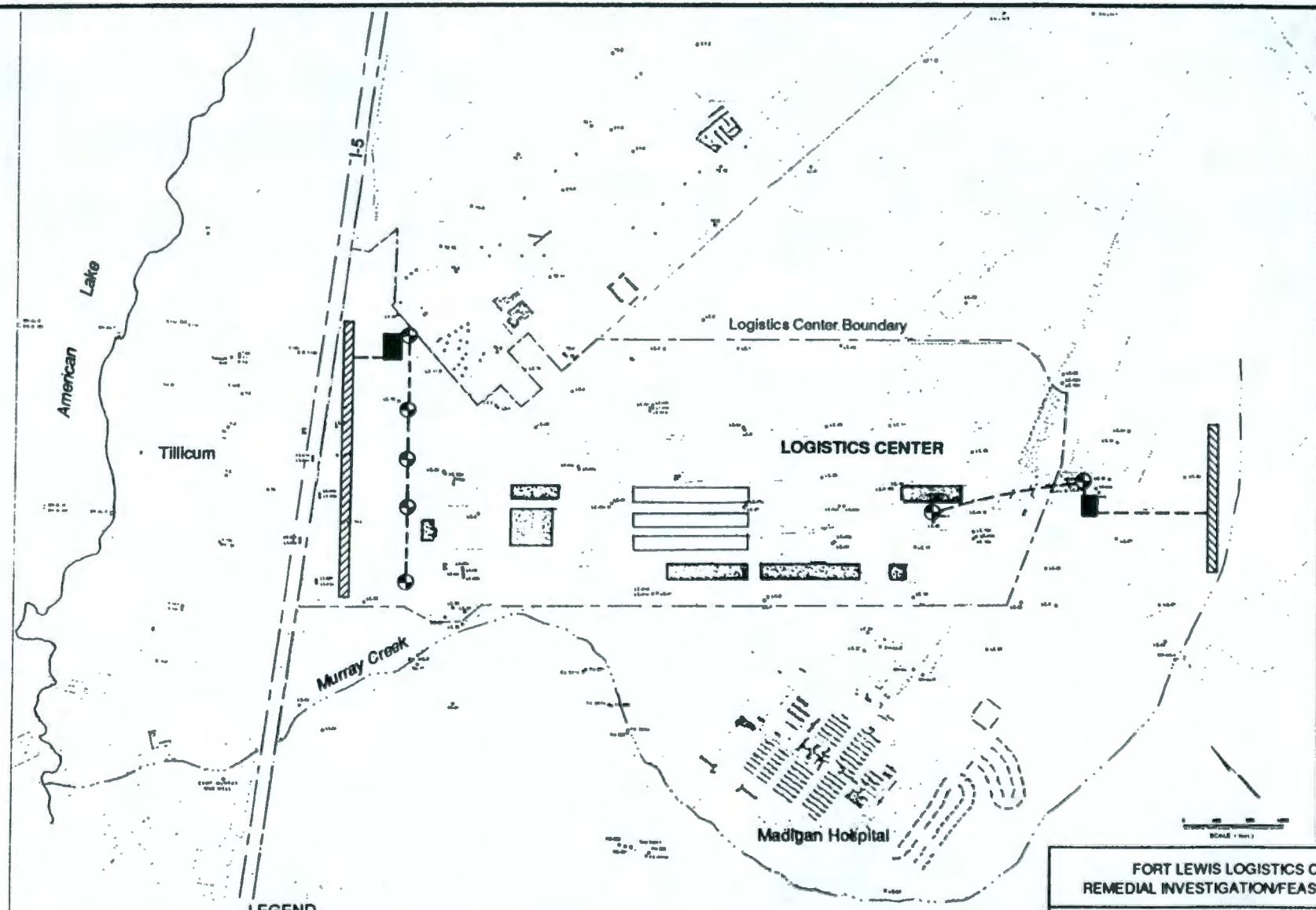

LEGEND

- Pumping Well Center at 1000 gpm
- Pipeline
- Treatment Plant
- Recharge Trench

NOTE

Each well center represents a cluster of three wells, each yielding 330 gpm.

FORT LEWIS LOGISTICS CENTER
REMEDIAL INVESTIGATION/FEASIBILITY STUDY

FIGURE 6-17
PLAN VIEW OF EXTRACTION AND RECHARGE SYSTEM FOR ALTERNATE G-3

Section No.
Revision No.
Revision Date
Page of

envirosphere company
In Association with
SHANNON & WILSON

A 16-inch ductile iron pipe will connect the extraction wells to the source area treatment plant. The distance to the treatment plant is estimated to be 2,000 feet. The pipe will be laid in a trench on top of compacted sand fill. Select backfill will be used to fill the remaining void in the trench. A cross-section of the trench is shown in Figure 6-12. The pipe will be installed at a grade that will allow gravity flow of the water to the treatment plant.

Installation of the extraction system will be straightforward. Standard construction practices will be utilized.

6.5.5 I-5 Treatment System

This treatment system is identical to the system described in Section 6.4.6. A process flow diagram for this system is shown in Figure 6-18. Groundwater from the I-5 extraction wells flows by gravity to the 10,000-gallon flow equalization tank and is then pumped directly to two air stripping towers at a rate of 5,000 gpm. The concentration of the TCE in the inlet to the air stripper is 70 ppb. This value is based on the results of the groundwater modeling (see Section 6.2). In the air stripping towers, the concentration of TCE in the groundwater is reduced from 70 ppb to 0.5 ppb. The volatilized TCE will be discharged with the air to the atmosphere, and the treated groundwater will drain into two sumps. From the sumps, the treated groundwater will be pumped to the recharge system. Details on the design of this system can be found in Section 6.4.6, and are not repeated here.

6.5.6 Source Area Treatment System

A flow diagram for the source area treatment system is shown in Figure 6-19, and the design criteria and design values are presented in Table 6-6. Groundwater from the source area extraction wells flows by gravity to the 5,000-gallon flow equalization tank and is then pumped directly to an air stripping tower at a rate of 2,000 gpm. The concentration of the TCE in the inlet to the air stripper is 145 ppb.

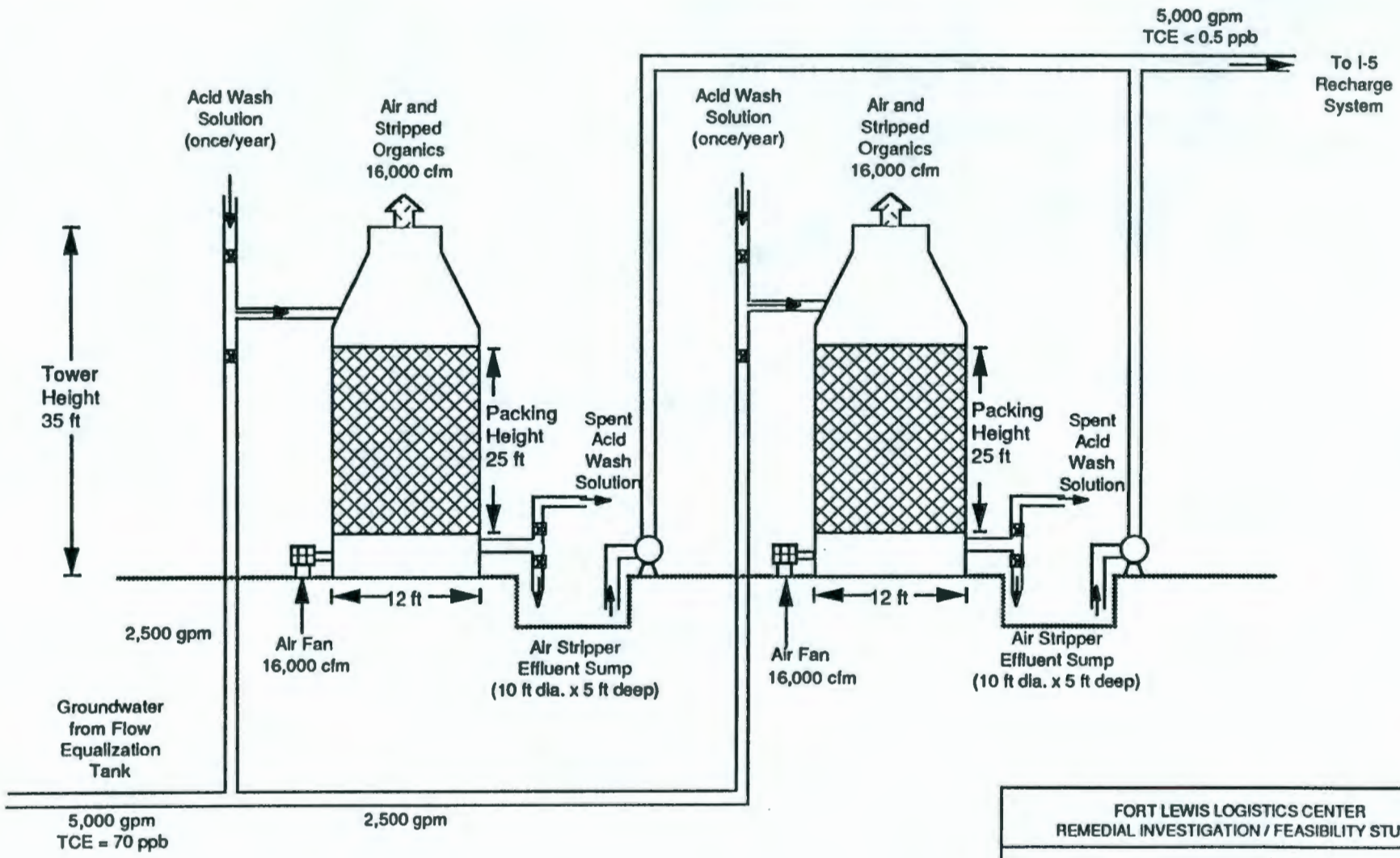

FORT LEWIS LOGISTICS CENTER
REMEDIAL INVESTIGATION / FEASIBILITY STUDY

FIGURE 6-18
ALTERNATIVE G3 - I-5
TREATMENT SYSTEM

Section No.
Revision No.
Revision Date:
Page of

envirosphere company
In Association with
SHANNON & WILSON

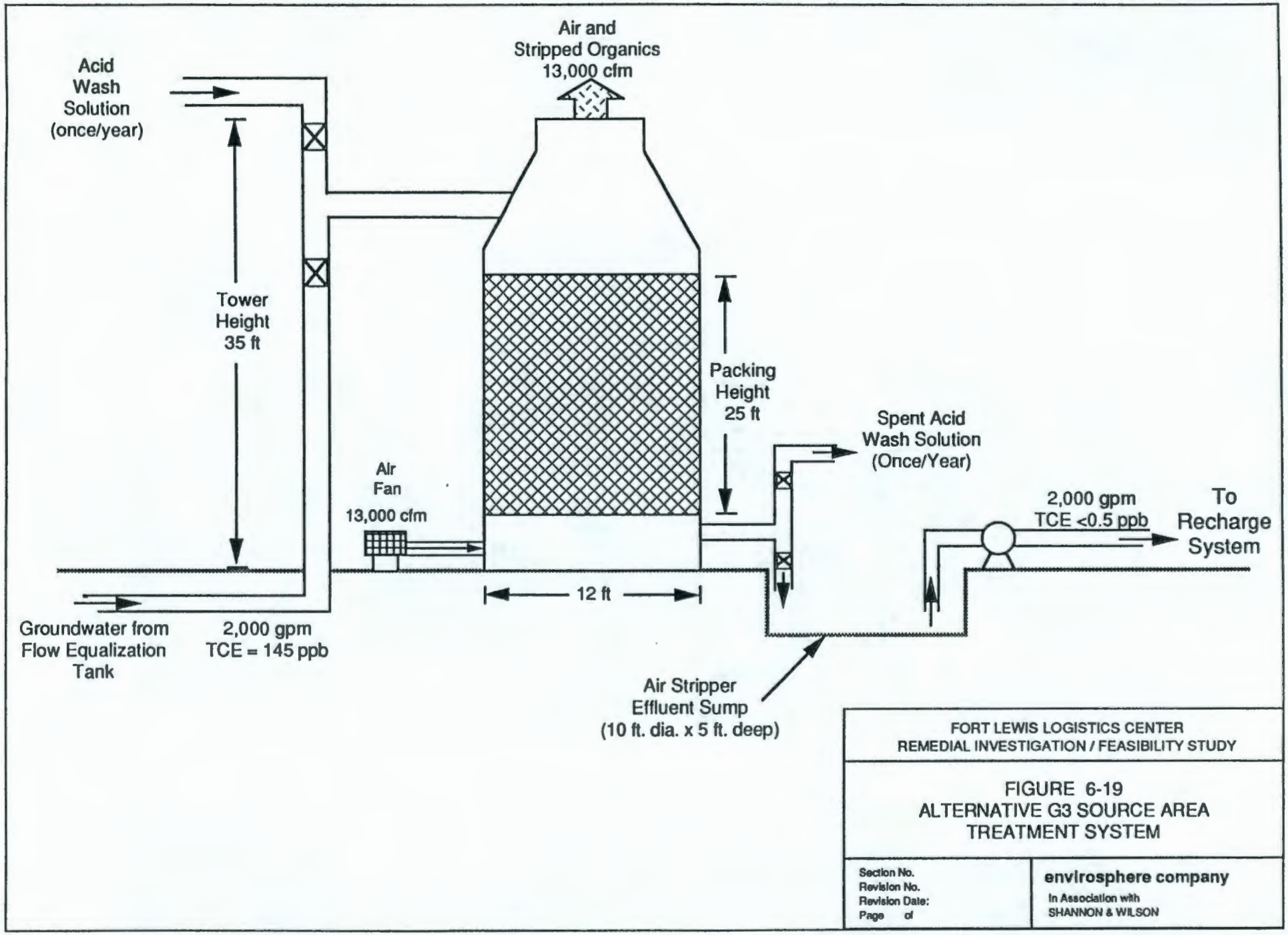
Acid
Wash
Solution
(once/year)
Air and
Stripped Organics
13,000 cfm
Tower
Height
35 ft
Packing
Height
25 ft
Spent Acid
Wash Solution
(Once/Year)
Air
Fan
13,000 cfm
2,000 gpm
TCE <0.5 ppb
To
Recharge
System
12 ft
Groundwater from
Flow Equalization
Tank
2,000 gpm
TCE = 145 ppb
Air Stripper
Effluent Sump
(10 ft. dia. x 5 ft. deep)
FORT LEWIS LOGISTICS CENTER
REMEDIAL INVESTIGATION / FEASIBILITY STUDY
FIGURE 6-19
ALTERNATIVE G3 SOURCE AREA
TREATMENT SYSTEM
Section No.
Revision No.
Revision Date:
Page of
envirosphere company
In Association with
SHANNON & WILSON

TABLE 6-6

DESIGN CRITERIA AND DESIGN VALUES FOR
SOURCE AREA TREATMENT SYSTEM

Item	Value
Design Criteria	
Design Flowrate[1/]	2,000 gpm
Inlet Concentration[1/]	
TCE	145 ppb
DCE	14.5 ppb
Outlet Concentration	
TCE	0.5 ppb
DCE	Already meets objective of less than 20% of the RMCL
Design Values	
Number of Flow Equalization Tanks	1
Capacity of Flow Equalization Tank	5,000 gallon
Number of Air Stripper Units	1
Air Stripper Diameter	12 ft
Air Stripper Height	35 ft
Packing Height	25 ft
Air-Liquid Ratio	50:1
Air Flowrate	13,000 cfm/column
Liquid Loading	21 gpm/ft^2
Number of Sumps	1
Air Stripper Effluent Sump Dimensions	10 ft dia. x 5 ft deep

1/ Based on the results of the groundwater modeling (see Section 6.2)

This value is based on the results of the groundwater modeling (see Section 6.2). In the air stripping towers, the concentration of TCE in the groundwater is reduced from 145 ppb to less than 0.5 ppb. Volatilized TCE will be discharged with the air to the atmosphere, and the treated groundwater drains into a sump. From the sump, the treated groundwater will be pumped to the source area recharge system.

One 12-foot diameter air stripping tower is required to handle the 2,000 gpm flowrate, and 25 feet of packing and a 50:1 air-to-water ratio are required to reduce the TCE concentration in the water from 145 pb to below 0.5 ppb. Approximately 3.47 lb/day of TCE would be emitted from the column.

As discussed in Section 6.4.6, installation of the treatment system will be straightforward. Prefabricated air strippers and tanks are readily available from many vendors for ease of construction. In addition, standard construction practices may be used for installation of the sump.

Operation and maintenance of the treatment system will also be straightforward. One workday/week will be required for operation and maintenance. Periodic equipment inspection will be required in addition to normal maintenance. One fan and one pump will require periodic maintenance and replacement, and the air stripping column will require flushing approximately once a year to prevent buildup of precipitates and bacteria. (Since this operation generates spent acid, a hazardous waste generator permit from WDOE will be required.) Effluent from the air stripper will also have to be monitored monthly, and the results of the monitoring will have to be reported.

6.5.7 I-5 Recharge System

The recharge system is identical to the system described in Section 6.4.7. Following treatment, the groundwater will be pumped through a 1,000-foot-long, 14-inch, ductile iron pipe to the recharge

system. The recharge system will be located about 300 feet south of I-5 (see Figure 6-17). More details on this recharge system can be found in Section 6.4.7, and are thus not repeated here.

6.5.8 Source Area Recharge System

Following treatment of the water in the treatment plant, it will be pumped through a 1,000-foot-long, 10-inch, ductile iron pipe to the recharge system. Ductile iron was chosen over HDPE or other plastic material because it is stronger and more durable. In addition, the anticipated life-span of ductile iron pipe is at least 50 years. The recharge system will be located upgradient of the source area extraction system between the East Gate Disposal Yard and Murray Creek (see Figure 6-17). The recharge system is located upgradient of the East Gate Disposal Yard in order to flush contaminants from the source areas in the saturated zone.

The source area recharge system will consist of the distribution line, distribution branches, and the perforated pipe from which the groundwater drains. The distribution system consists of a 2,000-foot-long distribution line (6-inch-diameter ductile iron pipe) which is connected to the perforated pipe by means of the distribution branches (6-inch-diameter ductile iron pipe) located every 100 feet (see Figure 6-20). The 18" perforated pipe is laid at the bottom of a 10 foot deep trench and the distribution line is laid in the same trench five feet above the perforated pipe. The two pipes are connected by 21 distribution branches running vertically. The whole trench is backfilled with gravel to promote infiltration. A cross-section of the recharge trench is shown in Figure 6-15. Two duplex 130 hp pumps are used to overcome frictional losses in the pipes, but do not provide any additional head to inject water into the ground. The water flows from the holes in the perforated pipe by gravity.

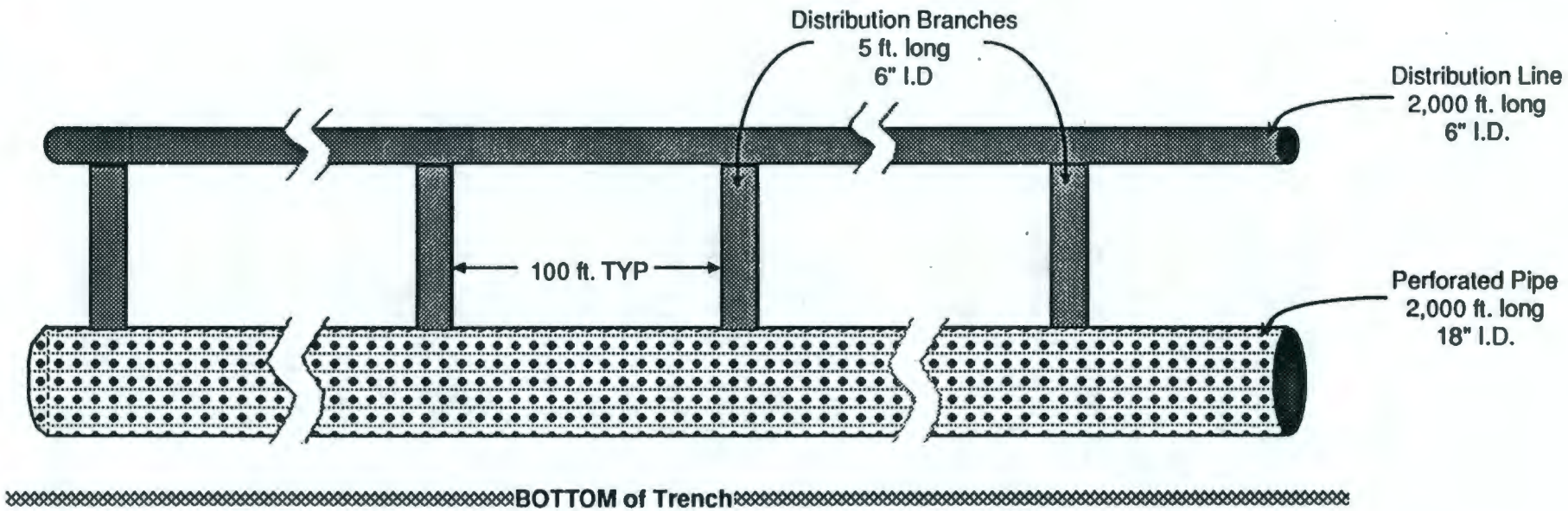

NOTE: NOT TO SCALE

FORT LEWIS LOGISTICS CENTER
REMEDIAL INVESTIGATION / FEASIBILITY STUDY

FIGURE 6-20
RECHARGE PIPING SCHEMATIC FOR SOURCE AREA RECHARGE SYSTEM

Section No.
Revision No.
Revision Date:
Page of

envirosphere company
In Association with
SHANNON & WILSON

Installation of the recharge system will be straightforward, only requiring standard construction practices. Prior to installation, though, approval would be required from WDOE for recharging water to the ground. This should not present any difficulties, since the concentration of TCE (carcinogen) will be lower than 10% of the MCL and the concentration of DCE (noncarcinogen) will be lower than 20% of the RMCL.

Operation and maintenance of the recharge system will also be straightforward. The only components of the system which have moving parts are the two 130 hp pumps. These pumps will require periodic maintenance and replacement.

6.5.9 Public Protection and Worker Safety during Construction and Remediation

Exposure to TCE during construction is most likely to occur during installation of the extraction wells. During all construction activities airborne concentrations of TCE can be monitored. If the concentration rises above the level of concern, remediation workers would wear respirators in addition to standard protective gear. Community health concerns during construction are nonexistent.

Computer dispersion modeling was used to determine whether releases of TCE to the atmosphere from the air strippers are a health concern to the surrounding community. Details of the air quality modeling are given in Appendix F. The EPA-approved ISCLT computer dispersion model was used to estimate the worst case annual TCE concentration downwind of the stripping tower. Concentrations of TCE in the atmosphere in the area surrounding the air strippers is shown in Figure 6-21. The estimated worst case off-site concentration is 0.060 ug/m^3. This concentration would result in less than a 10^{-6} risk to residents, and is therefore protective of human health (see Section 6.5.10).

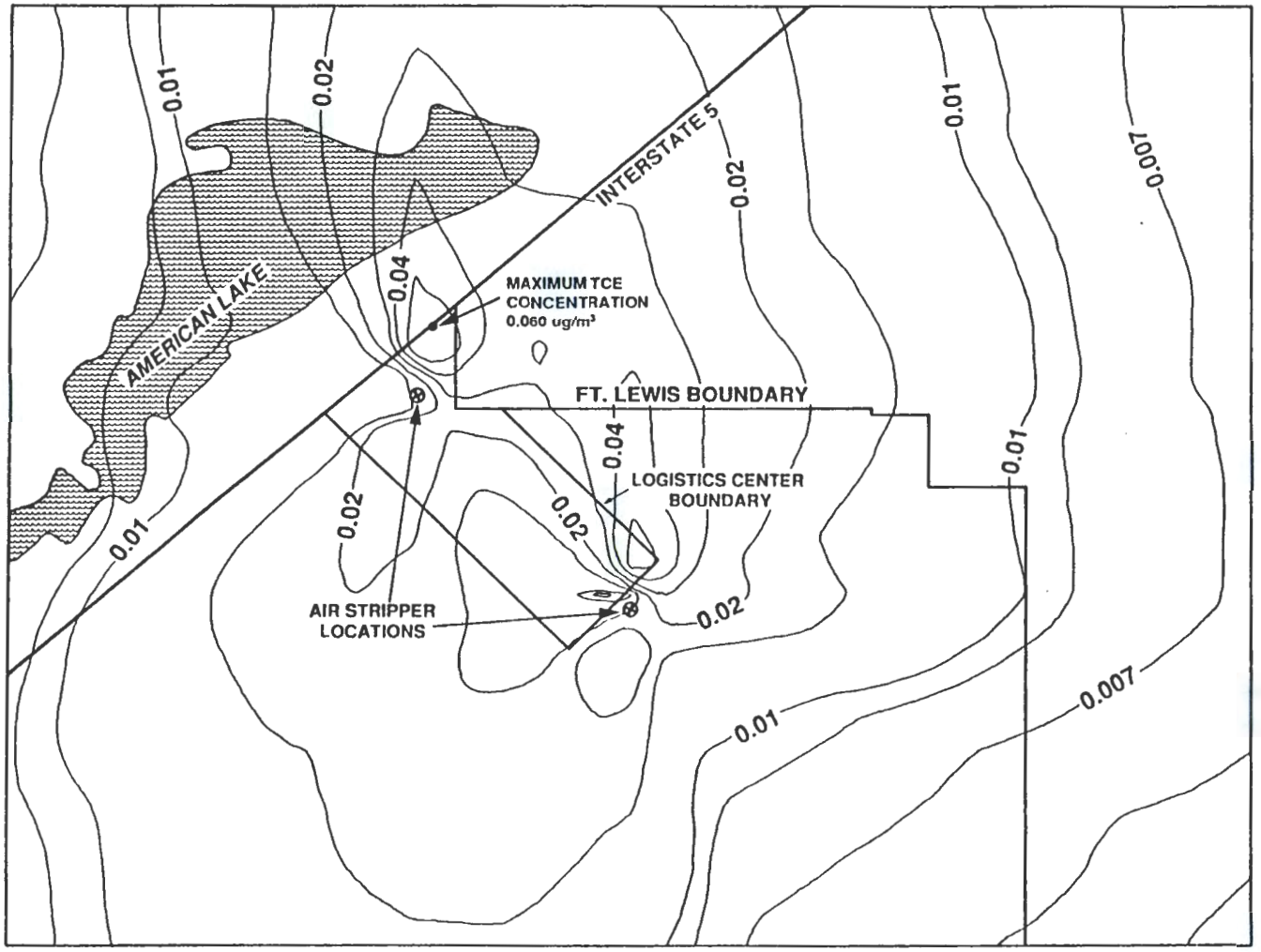

N

1000 METERS

FORT LEWIS LOGISTICS CENTER
REMEDIAL INVESTIGATION / FEASIBILITY STUDY

FIGURE 6 - 21
PREDICTED ANNUAL AVERAGE
AMBIENT TCE VAPOR CONCENTRATIONS
(IN ug/m³) FOR ALTERNATIVE G-3

Section No:
Revision No:
Revision Date:
Page of

envirosphere company
In association with
SHANNON & WILSON

6.5.10 Residual Risk

Residual risks from the groundwater remediation alternative G3 were evaluated for on-site workers during construction of extraction wells and groundwater treatment facilities, as well as on-site workers and off-site residents during and after remediation. Exposure pathways evaluated for these scenarios, although not applicable in all instances, include soil ingestion, soil vapor inhalation, soil particulate inhalation, inhalation of air-stripping emissions, ingestion of water effluent from groundwater treatment system, ingestion of remediated groundwater, inhalation of volatile contaminants while showering, and consumption of TCE-contaminated fish. The results of these analyses are summarized in Table 6-7 below. The methodological approach, assumptions and contaminant-specific risks, and uncertainties are presented in Appendix H.

TABLE 6-7

RESIDUAL RISKS ASSOCIATED WITH THE G3 WATER REMEDIAL ALTERNATIVE

Exposed Population[1/]	Cancer	Hazard Index
During Construction		
Worker (1)	6.6×10^{-7}	2.8×10^{-2}
During Remediation		
Resident (2) from Air Stripper	3.7×10^{-7}	1.5×10^{-6}
Resident (3) from Effluent	1.8×10^{-4}	3.7×10^{-1}
After Remediation		
Worker (4)	7.1×10^{-5}	9.9×10^{-1}
Residents (5)	1.4×10^{-4}	1.1

1/ Number in parentheses indicates the exposure scenario (see Appendix H).

6.5.11 Estimated Remediation Cost

The estimated ROM costs are shown on Tables 6-8 through 6-10. Capital costs are shown in Table 6-8, operating costs are shown in Table 6-9, and a summary of the costs including the net present worth is shown in Table 6-10. All costs are in January 1989 dollars.

6.6 EVALUATION OF ALTERNATIVES

In this section, the four alternatives are evaluated against the criteria that were described in Sections 6.1 and 5.1. The ratings for each criteria are summarized in Tables 6-11 through 6-17. Details of the analyses are presented in Appendix E.

6.8 SUMMARY OF GROUNDWATER DETAILED ANALYSES

The detailed analysis of the three groundwater alternatives is summarized in Table 6-18. This table includes the ratings that the three alternatives received for each of the evaluation criteria and the ROM (+50%, -30%) capital, operating, and net present worth costs associated with each alternative.

TABLE 6-8

ROUGH ORDER OF MAGNITUDE CAPITAL COSTS
(+50%, -30%) FOR ALTERNATIVE G3

Item	Cost
Institutional Actions	
Ordinance Negotiations	$4,000
Restrictive Covenants for On-Site Properties	--- 1/
Pierce County Auditor's Office Fees	--- 1/
Pierce County Tax Assessor's Office Fees	--- 1/
Total	$4,000
I-5 Extraction System	
Pump Test	$ 52,000
Wells (15 @ $20,000/well)	300,000
Pumps, 20 hp (15 @ $5,000/pump)	75,000
Excavation (3,973 cu. yd. @ $5/cu. yd.)	20,000
Select Backfill (3,643 cu. yd. @ $5/cu. yd.)	18,000
Sand Bedding (185 cu. yd. @ $10/cu. yd.)	2,000
Pipe, 16" Ductile Iron (3,300 ft. @ $35/ft.)	115,000
Subtotal	582,000
Engineering (Add 10%)	58,000
Indirect Costs (Add 15%)	87,000
Subtotal	727,000
Contingency (Add 20%)	145,000
Total	$872,000
Source Area Extraction System	
Pump Test	$ 34,000
Wells (6 @ $20,000/well)	120,000
Pumps, 20 hp (6 @ $5,000/pump)	30,000
Extraction (3,000 cu. yd. @ $5/cu. yd.)	15,000
Select Backfill (2,760 cu. yd. @ $5/cu. yd.)	14,000
Sand Bedding (140 cu. yd. @ $10/cu. yd.)	1,000
Pipe, 16" Ductile Iron (2,500 ft. @ $35/ft.)	88,800
Subtotal	$302,000

TABLE 6-8 (cont.)
ROUGH ORDER OF MAGNITUDE CAPITAL COSTS
(+50%, -30%) FOR ALTERNATIVE G3

Item	Cost
Engineering (Add 10%)	$30,000
Indirect Costs (Add 15%)	45,000
Subtotal	$377,000
Contingency (Add 20%)	75,000
Total	$452,000
I-5 Treatment System	
Flow Equalization Tank, 10,000 gallons	$10,000
Air Strippers including pumps and fans (2 @ $175,000/air stripper)	350,000
Sump and Foundation	6,000
Subtotal	$366,000
Engineering (Add 10%)	37,000
Installation (Add 30%)	110,000
Freight (Add 7% of Air Stripper Cost)	25,000
Air Quality Licensing	15,000
Subtotal	533,000
Contingency (Add 20%)	111,000
Total	664,000
Source Area Treatment System	
Flow Equalization Tank, 5,000 gallon	$5,000
Air Stripper including Pumps and Fans	175,000
Sump and Foundation	3,000
Subtotal	183,000
Engineering (Add 10%)	18,000
Installation (Add 30%)	55,000
Freight (Add 7% of Air Stripper Cost)	12,000
Air Quality Licensing	15,000
Subtotal	283,000
Contingency (Add 20%)	57,000
Total	340,000

7689K

TABLE 6-8 (cont.)
ROUGH ORDER OF MAGNITUDE CAPITAL COSTS
(+50%, -30%) FOR ALTERNATIVE G3

Item	Cost
I-5 Recharge System	
Excavation (27,130 cu. yd. @ $5/cu. yd.)	$136,000
Select Backfill (14,067 cu. yd. @ $5/cu. yd.)	70,000
Sand Bedding (56 cu. yd. @ $10/cu. yd.)	1,000
Free Draining Gravel (12,627 cu. yd. @ $10/cu. yd.)	126,000
Pipe, 12" Ductile Iron (3,680 ft. @ $25/ft.)	92,000
Pipe, 14" Ductile Iron (1,000 ft. @ $31/ft.)	31,000
Pipe, 18" Perforated (3,500 ft. @ $24/ft.)	84,000
Pump, 265 hp (2 @ $92,000/pump)	184,000
Subtotal	$724,000
Engineering (Add 10%)	72,000
Indirect Costs (Add 15%)	109,000
Subtotal	905,000
Contingency (Add 20%)	181,000
Total	$1,086,000
Source Area Recharge System	
Excavation (15,900 cu. yd. @ $5/cu. yd.)	$80,000
Select Backfill (8,400 cu. yd. @ $5/cu. yd)	42,000
Sand Bedding (39 cu. yd. @ $10/cu. yd.)	1,000
Free Draining Gravel (7,300 cu. yd. @ $10/cu. yd.)	73,000
Pump, 130 hp (2 @ $54,000/pump)	108,000
Pipe, 6" Ductile Iron (2,105 ft. @ $12/ft.)	25,000
Pipe, 10" Ductile Iron (1,000 ft. @ $20/ft.)	20,000
Pipe, 18" Perforated (2,000 ft. @ $24/ft.)	48,000
Subtotal	$397,000
Engineering (Add 10%)	40,000
Indirect Costs (Add 15%)	60,000
Subtotal	497,000

TABLE 6-8 (cont.)
ROUGH ORDER OF MAGNITUDE CAPITAL COSTS
(+50%, -30%) FOR ALTERNATIVE G3

Item	Cost
Contingency (Add 20%)	99,000
Total	596,000
Total Capital Cost	$4,014,000

1/ Costs for these activities have already been included in the costs for the soil alternatives. Therefore, these costs are not included here.

TABLE 6-9
ROUGH ORDER OF MAGNITUDE OPERATING COSTS
(+50%, -30%) FOR ALTERNATIVE G3

Item	Cost
Monitoring	
Quarterly Sampling - First 2 years (26 wells @ $310/well)	$32,240
Semi-Annual Sampling - 28 years (26 wells @ $310/well)	16,120
I-5 Extraction System	
Electricity (2,000,000 kwHr/year @ 5¢/kwHr)	$100,000
Equipment Maintenance	11,000
Labor Costs (1 manday/week @ $30/manhour)	12,000
Total	$123,000
Source Area Extraction System	
Electricity (784,000 kwHr @ 5¢/kwHr)	$39,000
Equipment Maintenance	5,000
Labor Costs (4 manhours/week @ $30/manhour)	6,000
Total	$50,000
I-5 Treatment System	
Electricity (1,636,000 kwHr/year @ 5¢/kwHr)	$82,000
Equipment Maintenance	11,000
Acid Washing (once/year)	10,000
Labor Costs (1 manday/week @ $30/manhours)	12,000
Effluent Monitoring (monthly)	3,000
Total	$118,000
Source Area Treatment System	
Electricity (630,500 kwHr/year @ 5¢/kwHr)	$32,000
Equipment Maintenance	5,000
Acid Washing (once/year)	5,000
Labor Costs (1 manday/week @ $30/manhour)	12,000
Effluent Monitoring (monthly)	3,000
Total	$57,000

TABLE 6-9 (cont.)
ROUGH ORDER OF MAGNITUDE OPERATING COSTS
(+50%, -30%) FOR ALTERNATIVE G3

Item	Cost
I-5 Recharge System	
Electricity (1,734,000 kwHr/year @ 5¢/kwHr)	$87,000
Equipment Maintenance	14,000
Labor Costs (1 manday/week @ $30/manhour)	12,000
Total	$113,000
Source Area Recharge System	
Electricity (849,000 kwHr/year @ 5¢/kwHr)	$42,000
Equipment Maintenance	8,000
Labor Costs (4 manhours/week @ $30/manhour)	6,000
Total	$56,000
Total Operating Cost (Not Including Monitoring)	$517,000

TABLE 6-10
SUMMARY OF ROUGH ORDER OF MAGNITUDE COSTS
(+50%, -30%) FOR ALTERNATIVE G3

Item	Cost
Capital Costs	
Institutional Actions	$4,000
I-5 Extraction System	872,000
Source Area Extraction System	452,000
I-5 Treatment System	664,000
Source Area Treatment System	340,000
I-5 Recharge System	1,086,000
Source Area Recharge System	596,000
Total	$4,014,000
Operating Costs	
Monitoring	
First 2 years	$32,240
Remaining 28 years	16,120
I-5 Extraction System	123,000
Source Area Extraction System	50,000
I-5 Treatment System	118,000
Source Area Treatment System	57,000
I-5 Recharge System	113,000
Source Area Recharge System	56,000
Total (not including monitoring)	$517,000
Net Present Worth (including monitoring) (i = 10%, n = 30 years)	$9,068,000
Net Present Worth (including monitoring) (i = 4%, n = 30 years)	$13,263,000

TABLE 6-11

EVALUATION OF GROUNDWATER REMEDIATION ALTERNATIVES FOR "SHORT-TERM EFFECTIVENESS DURING CONSTRUCTION"

Remedial Alternative	Evaluation
G-1: No Action	Rating = High. No physical remediation would be done, so there would be no risks caused by this alternative. Most affected off-site property owners have already been placed on the Lakewood Water District water supply. Notice to other potentially affected property owners will be facilitated by the routine groundwater monitoring program.
G-2: Extraction Along I-5, Air Stripping, and Recharge	Rating = High. Provides a high level of protection to the community and remediation workers during construction of the extraction, treatment, and recharge systems. If airborne concentrations of TCE become higher than levels of concern during construction, remediation workers would wear respirators in addition to standard protective gear. Installation of the system would have no adverse environmental impacts, and construction could be completed in 6 months.
G-3: Combined Extraction along I-5 and near Source Areas, Air Stripping, Recharge	Rating = High. Same as G2.

TABLE 6-12

EVALUATION OF GROUNDWATER REMEDIATION ALTERNATIVES FOR "LONG-TERM PROTECTION"

Remedial Alternative	Evaluation
G-1: No Action	Rating = Low. Maximum residual risk after alternative implemented because no effort to reduce contamination in uppermost aquifer. Contamination of upper aquifer could migrate downward into potable aquifers. However, groundwater monitoring would alert officials if contamination spread to the American Lake Garden Tract water wells.
G-2: Extraction Along I-5, Air Stripping, and Recharge	Rating = Medium. Groundwater downgradient of the Logistics Center will be remediated in 10 to 20 years; however, contaminated groundwater beneath the Logistics Center would require a long time (greater than 50 years) to remediate. This long remediation time would continue the risk of contaminating the deeper potable aquifer. The long cleanup time also makes long-term management of the site a requirement. Performance of the air strippers would have to be monitored and pumps and fans would require maintenance. In addition, long-term monitoring of the groundwater would be required.
G-3: Combined Extraction along I-5 and near Source Areas, Air Stripping, Recharge	Rating = High. Groundwater downgradient of the Logistics Center will be remediated in 10 to 20 years, and groundwater beneath the Logistics Center would be remediated in 30 years, except for a relatively small volume just downgradient of suspected source areas in the saturated zone. Since the contamination would be confined to a small area, there is less risk of contamination spreading vertically to deeper potable aquifers. Since pumping from source area extraction wells would continue until the source areas in the saturated zone are remediated, long-term management of the site is needed. Performance of air strippers would have to be monitored and pumps and fans would require maintenance. In addition, long-term monitoring of the groundwater would be required.

TABLE 6-13

EVALUATION OF GROUNDWATER REMEDIATION ALTERNATIVES FOR "REDUCTION OF TOXICITY, MOBILITY, OR VOLUME"

Remedial Alternative	Evaluation
G-1: No Action	Rating = Low. No specific measures for compliance with SARA Section 121 requirements to reduce toxicity, mobility and volume of hazardous substances. No treatment processes used, no hazardous materials destroyed, no reduction in toxicity, mobility, and volume provided by this alternative.
G-2: Extraction Along I-5, Air Stripping, and Recharge	Rating = Medium. Most of the remedial action objectives are adequately addressed by this alternative. Contaminated groundwater will be confined to the Logistics Center. This will result in some reduction of the mobility of contaminated groundwater. However, horizontal and vertical migration of groundwater directly beneath the Logistics Center is not controlled, since no extraction wells are installed near the source of contamination. Eventually, all groundwater in the unconfined aquifer having in excess of the remedial action objective would be extracted from the I-5 wells and treated at a rate of 5,000 gpm. Treatment of the contaminated groundwater will result in the release of TCE to the atmosphere. This will result in an increase in the mobility of the contaminants released from the treated groundwater. However, the ambient TCE levels will result in less than a 10^{-6} risk to residents, and the toxicity and volume of contaminants will eventually be reduced since TCE decomposes in the atmosphere.

TABLE 6-13 (cont.)

EVALUATION OF GROUNDWATER REMEDIATION ALTERNATIVES FOR "REDUCTION OF TOXICITY, MOBILITY, OR VOLUME"

G-4:	Combined Extraction Along I-5 and Near Source Areas, Air Stripping, Recharge	Rating = High. This alternative adequately addresses all the remedial action objectives. Contaminated groundwater would be confined to a small area in the unconfined aquifer downgradient of the source areas. Potential for downward migration would be minimized. A significant reduction in the mobility of contaminated groundwater would be achieved. All groundwater in the unconfined aquifer having in excess of the remedial action objective would be treated. The groundwater will be treated at a rate of 7,000 gpm. Treatment of contaminated groundwater will result in the release of TCE to the atmosphere. This will result in an increase in the mobility of the contaminants released from the treated groundwater. However, the ambient TCE levels will result in less than a 10^{-6} risk to residents and the toxicity and volume of contaminants will eventually be reduced since TCE decomposes in the atmosphere.

TABLE 6-14

EVALUATION OF GROUNDWATER REMEDIATION ALTERNATIVES FOR "IMPLEMENTABILITY"

Remedial Alternative	Evaluation
G-1: No Action	Rating = High. The continuation of the groundwater monitoring program that was designed, installed and developed under the Remedial Investigation could be implemented with minimal time and oversight. Agency coordination on reporting requirements could be easily facilitated.
G-2: Extraction Along I-5, Air Stripping, and Recharge	Rating = Medium. This alternative would be more difficult to implement than G-1. However, no significant problems are expected. Construction of extraction system and recharge system and installation of air strippers would not be difficult. Equipment and specialists are readily available for these well-developed technologies. RCRA disposal services for spent acid washing solution would be required. Technologies used in this system should reliably meet performance goals. No future remedial action will be required, since groundwater will be cleaned, and potential migration and exposure pathways during remediation can be adequately monitored. Permits from WDOE would be required. Little difficulty should be experienced in obtaining these permits.
G-3: Combined Extraction Along I-5 and Near Source Areas, Air Stripping, Recharge	Rating = Medium. Same as G2.

TABLE 6-15

EVALUATION OF GROUNDWATER REMEDIATION ALTERNATIVES FOR "COMPLIANCE WITH ARARs"

Remedial Alternative	Evaluation
G-1: No Action	Rating = Low. The use of Maximum Contaminant Levels (MCLs) as the cleanup standard is relevant and appropriate, if not applicable, in both the unconfined and the Salmon Springs aquifers since both are used as drinking water sources. Therefore, chemical-specific ARARs will not be met. Residents are not prevented from using their wells for domestic purposes. Action-specific ARARs will be met through the continuation of the groundwater monitoring program.
G-2: Extraction Along I-5, Air Stripping, and Recharge	Rating = High. Contaminant and action-specific ARARs will be met. Air emissions from the air strippers will result in less than a 10^{-6} risk to residents. Groundwater will be remediated to 10% of the MCL for TCE and 20% of the MCLG for DCE. No location-specific ARARs have been identified.
G-3: Combined Extraction Along I-5 and Near Source Areas, Air Stripping, Recharge	Rating = High. Same as G2.

TABLE 6-16

EVALUATION OF GROUNDWATER REMEDIATION ALTERNATIVES FOR "PROTECTION OF HUMAN HEALTH AND ENVIRONMENT"

Remedial Alternative	Evaluation
G-1: No Action	Rating = Low. This alternative fails to satisfy the remedial objective of preventing the migration of contaminants to the lower aquifer. No protection of the environment will be achieved.
G-2: Extraction Along I-5, Air Stripping, and Recharge	Rating = Medium. This alternative would effectively eliminate the health risks due to ingestion of contaminated groundwater in the upper aquifer, both during remediation and once remediation is complete. Groundwater downgradient of the Logistics Center would be remediated in 10 to 20 years. However, vertical migration of contaminated groundwater from beneath the Logistics Center could result in the deterioration of groundwater in the lower potable aquifer.
G-3: Extraction Along I-5, Air Stripping, and Recharge	Rating = High. This alternative would effectively eliminate the health risks due to ingestion of contaminated groundwater both during remediation and once remediation is complete. Groundwater beneath Tillicum would be cleaned up in 10 to 20 years, and contaminated groundwater beneath the Logistics Center would be confined to a small area downgradient of presumed source areas in the saturated zone in approximately 30 years.

TABLE 6-17

SUMMARY OF ROUGH ORDER OF MAGNITUDE COSTS (+50%, -30%)
FOR GROUNDWATER REMEDIATION ALTERNATIVES

Remedial Alternative	Capital Costs	Operating Costs	Net Present Worth (i=10%, n=30)	Net Present Worth (i=4%, n=30)
G-1: No Action	0	$32,240/year 1/ $16,120/year 2/	$180,000	$309,000
G-2: Extraction Along I-5, Air Stripping and Recharge	$2,654,000	$354,000/year 3/	$6,171,000 4/	$9,084,000 4/
G-3: Combined Extraction Along I-5 and Near Source Areas, Air-Stripping, Recharge	$4,014,000	$517,000/year 3/	$9,068,000 4/	$13,263,000 4/

1/ Assumes four sampling events at $8,060/event for first 2 years. Applicable for all three groundwater remediation alternatives.

2/ Assumes two sampling events at $8,060/event for remaining 28 years. Applicable for all three groundwater remediation alternatives.

3/ Not including groundwater monitoring operating costs. The groundwater monitoring program will cost $30,240/year for the first two years and $16,120/year for the remaining 28 years.

4/ Includes all monitoring costs.

7689K

TABLE 6-18
SUMMARY OF GROUNDWATER DETAILED ANALYSES

Criteria	G-1: No Action	G-2: Extraction Along I-5, Air Stripping, and Recharge	G-3: Combined Extraction Along I-5 and Near Source Areas, Air Stripping, and Recharge
Short-Term Effectiveness During Construction	High	High	High
Long-Term Effectiveness	Low	Medium	High
Reduction of Toxicity, Mobility, and Volume	Low	Medium	High
Implementability	High	Medium	Medium
Compliance with ARARs	Low	High	High
Protection of Human Health and Environment	Low	Medium	High
Support Agencies Acceptance[1/]			
Community Acceptance[1/]			
Capital Cost	0	$2,654,000	$4,014,000
Operating Costs	$32,240/yr[2/] $16,120/yr[3/]	$354,000[4/]	$517,000[4/]
Net Present Worth (i=10%, n=30 yrs)	$180,000	$6,171,000[5/]	$9,068,000[5/]
Net Present Worth (i=4%, n=30 yrs)	$309,000	$9,084,000[5/]	$13,263,000[5/]

1/ Support agencies and community acceptance will be discussed in the Record of Decision and the Responsiveness Summary.
2/ Operating cost for first 2 years.
3/ Operating cost for remaining 28 years.
4/ Cost not including monitoring cost.
5/ Cost including monitoring cost.

7.0 REFERENCES

American Society of Civil Engineers (ASCE). 1972. Groundwater Management Manual. ASCE Manual 40. New York, New York. 1972.

American Society of Civil Engineers (ASCE). 1982. Backhoe with Record Length Expedites Slurry-Trench Construction. Civil Engineering, ASCE. 52 (8),64. August 1982.

Blaney, B.L. 1986. Alternate Techniques for Managing Solvent Wastes. J. Air Poll. Control Assoc. 36 (3), 275-285, March 1986.

Bouwer et al. 1981. Anaerobic Degradation of Halogenated 1- and 2-Carbon Organic Compounds. Environmental Science and Technology. 15, (5), May 1981.

Bouwer, E.J. and P.L. McCarty. 1983. Transformation of 1- and 2-Carbon Halogenated Aliphatic Organic Compounds Under Methanogenic Conditions. Applied Environmental Microbiology. 45 (4), 1286-1294. April 1983.

Breton et al. 1986. Technical Resource Document: Treatment Technologies for Solvent Containing Wastes. Prepared for EPA by GCA Corporation. EPA 600/2-86/095. October 1986.

Brown and Caldwell. 1985. Clover/Chambers Creek Geohydrologic Study. Prepared for Tacoma-Pierce County Health Department by Brown and Caldwell. July 1985.

Calgon Company. 1988. Personal communication with James R. Schaude, San Mateo, California, in June and July of 1988.

Calgon Company. 1989. Personal communication with James R. Schaude, San Mateo, California, January 1989.

Caron, C. 1982. The State of Grouting in the 1980's. Proceedings of the Conference on Grouting in Geotechnical Engineering, American Society of Civil Engineers, New York, New York. 1982.

Carter, L.W. and R.C. Knox. 1985. Groundwater Pollution Control, Lewis Publishers, Inc. Chelsea, MI.

Clark, R.M., Eilers, R.G., Goodrich, J.A., 1984. VOCs in Drinking Water: Cost of Removal. J. Env. Engineering, 110 (6), 1146-1156, Dec 1984.

Ecology and Environment, Inc. 1986. Tillicum Municipal Well Investigation, Tacoma, Washington. Prepared for the Environmental Protection Agency by Ecology and Environment. Report TDD R10-8601-02. October 1986.

Ebasco Environmental. 1990. Final Endangerment Assessment Report. Prepared for the Department of the Army, Seattle District, Corps of Engineers by Envirosphere Company. February 1990.

Environmental Law Institute. Compendium of Costs of Remedial Technologies at Hazardous Waste Sites. EPA 600/2-87-087. October 1987.

Environmental Protection Agency. 1982. Handbook for Remedial Action at Waste Disposal Sites. Municipal Environmental Research Laboratory, Office of Research and Development. Cincinnati, Ohio. EPA 625/6-82-006. June 1982.

Environmental Protection Agency. 1983a. Control of Organic Substances in Water and Wastewater. Office of Research and Development. EPA 600/8-83-011. April 1983.

Environmental Protection Agency. 1983b. Handbook for Evaluating Remedial Action Technology Plans. Municipal Environmental Research Laboratory, Office of Research and Development. Cincinnati, Ohio. EPA 600/2-83-076. August 1983.

Environmental Protection Agency. 1984. Compatibility of Grouts With Hazardous Wastes. Municipal Environmental Research Laboratory, Office of Research and Development. Cincinnati, Ohio. EPA 600/2-84-015. January 1984.

Environmental Protection Agency. 1985a. Guidance on Feasibility Studies under CERCLA. EPA Hazardous Waste Engineering Research Laboratory, Office of Research and Development. Cincinnati, Ohio. EPA 540/6-85-003. June 1985.

Environmental Protection Agency. 1985b. Revised Handbook: Remedial Action at Waste Disposal Sites, EPA Hazardous Waste Engineering Research Laboratory, Office of Research and Development. Cincinnati, Ohio. EPA 625/6-85-006. October 1985.

Environmental Protection Agency. 1986a. Treatment Technology Briefs: Alternatives to Hazardous Waste Landfills. EPA Hazardous Waste Engineering Research Laboratory, Office of Research and Development. Cincinnati, Ohio. EPA 600/8-86-017. July 1986.

Environmental Protection Agency. 1986b. Systems to Accelerate In Situ Stabilization of Waste Deposits. Hazardous Waste Engineering Research Laboratory, Office of Research and Development. Cincinnati, Ohio. EPA 540/2-86 002. September 1986.

Environmental Protection Agency. 1986c. Mobile Treatment Technologies for Superfund Wastes. Office of Solid Waste and Emergency Response, Office of Emergency and Remedial Response. Washington, D.C. EPA 540/2-86-003(f). September 1986.

Environmental Protection Agency. 1986d. Handbook for Stabilization/Solidification of Hazardous Wastes. Municipal Environmental Research Laboratory. Cincinnati, Ohio. EPA 540/2-86-001. June 1986.

Environmental Protection Agency. 1987a. A Compendium of Technologies Used in the Treatment of Hazardous Wastes. Center for Environmental Research Information. Cincinnati, Ohio. EPA 625/8-87-014. September 1987.

Environmental Protection Agency. 1987b. Field Studies of In Situ Soil Washing. Mason and Hanger-Silas, Mason Co., Inc., Leonardo, New Jersey. EPA 600/7-87-110. December 1987.

Environmental Protection Agency. 1988a. Guidance for Conducting Remedial Investigations and Feasibility Studies Under CERCLA (Draft). Office of Emergency and Remedial Response, Office of Solid Waste and Emergency Response. Washington, D.C. OSWER Directive 9335.3-01. March 1988.

Environmental Protection Agency. 1988b. CERCLA Compliance with Other Laws Manual: Parts I and II. Office of Emergency and Remedial Response, Washington, D.C. EPA 540/G-89-006 and EPA 540/G-89-009. August 1988 and August 1989.

Environmental Protection Agency. 1988c. Technology Screening Guide for Treatment of CERCLA Soils and Sludges. Office of Emergency and Remedial Response, Office of Solid Waste and Emergency Response. Washington, D.C. EPA 540/2-88-004. September 1988.

Environmental Protection Agency. 1989. Risk Assessment Guidance for Superfund. Vol. 1. Human Health Evaluation Manual (Part A). Interim Final. EPA 540/1-89-002. December 1989.

Environmental Protection Agency. 1990a. Human Health Risk Assessment, Fort Lewis Logistics Center. June 1990.

Environmental Protection Agency. 1990b. Exposure Parameters (January 31, 1990).

Envirosphere. 1988a. Fort Lewis RI/FS Management Plan. Prepared for the Department of the Army, Seattle District, Corps of Engineers by Envirosphere Company. February 1988.

Envirosphere. 1988b. Final Fort Lewis Logistics Center Remedial Investigation Report. Prepared for Department of the Army, Seattle District, Corps of Engineers by Envirosphere Company. November 1988.

Fletcher, D.B. 1987. UV/Ozone Process Treats Toxics. Waterworld News. 3, (3). May/June 1987.

Geo-Con, Inc. 1988. Technical Brief T-HW-7-88. July 1988.

Ghassemi et al. 1980. Comparative Evaluation of Processes for the Treatment of Concentrated Wastewaters at Uncontrolled Hazardous Waste Sites. In EPA National Conference on Management of Uncontrolled Hazardous Waste, Washington, D.C. October 15-17, 1980.

Gosset, J.H. 1985. Anaerobic Degradation of C1 and C2 Chlorinated Hydrocarbons. Report No. ESL-TR-85-38. Air Force and Engineering and Service Center. December 1985.

Grimm, E.C. and R.D. Hill. 1974. Environmental Predictions in Surface Mining of Coal. EPA 670/2-74-093. 1974.

Hager, D.G. 1986. Personal communication, President, Peroxidation Systems, Inc. Phone conversation with M. Schultz of Envirosphere Co. November 13, 1986.

Hager, D.G. and C.G. Loven. 1986. The Destruction of Organic Contaminants in Water by Chemical Oxidation. Presented at Haztech International, Denver, Colorado. August 13-15, 1986.

Hager, D.G. and C.G. Loven. 1987a. Chemical Oxidation Destruction of Organic Contaminants in Groundwater. Presented at HMCRI National Conference and Exhibition, Washington, D.C. November 16-18, 1987.

Hager, D.G. and C.G. Loven, 1987b. The Purification of Contaminated Groundwater by Chemical Oxidation or Adsorption. Presented at Superfund-A One-Day Symposium, The Kansas City Section of the American Institute of Chemical Engineers, Kansas City, Missouri. November 12, 1987.

Hand et al. 1986. Design and Evaluation of an Air Stripping Tower for Removing VOCs from Groundwater. Journal of the American Waterworks Association. September 1986.

Hutzler, N.J., B.E. Murphy, and J.S. Gierke. State of Technology Review: Soil Vapor Extraction Systems. Prepared by Michigan Technological University for EPA Haz. Waste Engineering Research Lab. Contract CR-814319-01-1. August 1988.

K-V Associates, Inc. 1985. Groundwater Well Survey, Logistics Center, Fort Lewis, Washington. Prepared for Seattle District, Corps of Engineers and Fort Lewis Facilities Engineer Office by K-V Associates, Inc. August 1985.

Kiang, Y. and A.R. Metry. 1982. Hazardous Waste Processing Technology. Ann Arbor Science Publishers, Inc., Ann Arbor, MI.

Kincannon et al. 1983. Removal mechanisms for Toxic Priority Pollutants. Journal of the Water Pollution Control Federation. 55 (2), 157-163.

McIntyre, G.T., Hatch, N.N., Gelman, S.R., Peschman, T.J., 1986. Design and Performance of a Groundwater Treatment System for Toxic Organics Removal. J. Water Poll. Cont. Federation. 58 (1), 41-46, Jan. 1986.

Roberts, P.V., Levy, J.A., 1985. Energy Requirements for Air Stripping Trihalomethanes. J. American Water Works Assoc. 138-145, April 1985.

Shannon & Wilson, Inc. 1986. Source Areas, Occurrence, and Recommended Remedial Alternatives for Trichloroethylene in Groundwater at Fort Lewis Logistics Center, Fort Lewis, Washington. Prepared for Seattle District, Corps of Engineers by Shannon & Wilson, Inc. May 1986. 47 p.

Shuckrow et al. 1986. Groundwater and Leachate Treatability Studies at Four Superfund Sites. Prepared for EPA by Baker, Jr. Inc. EPA/600/2-86-029. March 1986.

Singh et al. 1982. Distribution of Selected Gaseous Organic Mutagens and Suspect Carcinogens in Ambient Air. Environmental Science and Technology. 16(12).

Spindor, B. 1987. Personal Communication. Directorate of Engineering and Housing, Fort Lewis. Phone conversation with J. Wilder of Envirosphere. March 30, 1987.

Spivey et al. 1986. Preliminary Assessment of Hazardous Waste Pretreatment as an Air Pollution Control Technique. Prepared for EPA by Research Triangle Institute. EPA/600/2-86/028. March 1986.

Stenzel, M.H., Gupta, U.S., 1985. Treatment of Contaminated Groundwater with Granular Activated Carson and Air Stripping. J. Air Poll. Control Assoc., 35 (12), 1304-1309, Dec. 1985.

ULTROX International. 1988. Personal communication with Jerome T. Barich, Santa Ana, California, in December of 1988.

Vogel, T.M. and P.L. McCarty. 1985. Biotransformation of Tetrachloroethylene to Trichloroethylene, Dichloroethylene, Vinyl Chloride, and Carbon Dioxide Under Methanogenic Conditions. Applied and Environmental Microbiology. 49 (5). May 1985.

Walters, K.L., Kimmel, G.E. 1968. Groundwater Occurrence and Stratigraphy of Unconsolidated Deposits, Central Pierce County, Washington. State of Washington, Department of Water Resources. Water Supply Bulletin No. 22. 428 p.

WDOE. 1986. Hazardous Waste Cleanup Program: Fiscal Year 1986 Annual Report. Washington State Department of Ecology.

R.F. Weston, Inc. Installation General Environmental Technology Development Contract DAAK11-82-C-0019. Final Report: Task 11, In-Situ Air Stripping of Soils Pilot Study. Prepared for USATHAMA. October 1985.

Wilson, J. 1988. Personal Communication. EPA Expert on Biological Treatment. Phone conversation with D. Rodenhizer of Envirosphere Co. March 23, 1988.

Zeff, Jack D. 1986. Personal communication, Executive Vice-President, Technical Operations, Ultrox International. Phone conversation with M. Schultz of Envirosphere Co. November 11, 1986.