0010832

WHC-EP-0342
Addendum 29

242-S Evaporator Steam Condensate Stream-Specific Report

Prepared for the U.S. Department of Energy
Office of Environmental Restoration
and Waste Management

Westinghouse
Hanford Company Richland, Washington

Hanford Operations and Engineering Contractor for the
U.S. Department of Energy under Contract DE-AC06-87RL10930

Approved for Public Release

DISCLAIMER

This report was prepared as an account of work sponsored by an agency of the United States Government. Neither the United States Government nor any agency thereof, nor any of their employees, nor any of their contractors, subcontractors or their employees, makes any warranty, express or implied, or assumes any legal liability or responsibility for the accuracy, completeness, or any third party's use or the results of such use of any information, apparatus, product, or process disclosed, or represents that its use would not infringe privately owned rights. Reference herein to any specific commercial product, process, or service by trade name, trademark, manufacturer, or otherwise, does not necessarily constitute or imply its endorsement, recommendation, or favoring by the United States Government or any agency thereof or its contractors or subcontractors. The views and opinions of authors expressed herein do not necessarily state or reflect those of the United States Government or any agency thereof.

This report has been reproduced from the best available copy.
Available in paper copy and microfiche.
The U.S. Department of Energy and its contractors can obtain copies of this report from:
Office of Scientific and Technical Information
P.O. Box 62
Oak Ridge, TN 37831
(615) 576-8401
This report is publicly available from:
National Technical Information Service
5285 Port Royal Road
Springfield, VA 22161
(703) 487-4650

Printed in the United States of America

DISCLM-1.CHP (7-90)

START

0010852 84

WHC-EP-0342
Addendum 29

242-S Evaporator Steam Condensate Stream-Specific Report

Prepared for the U.S. Department of Energy
Office of Environmental Restoration
and Waste Management

Westinghouse
Hanford Company Richland, Washington

Hanford Operations and Engineering Contractor for the
U.S. Department of Energy under Contract DE-AC06-87RL10930

Approved for Public Release

THIS PAGE INTENTIONALLY
LEFT BLANK

WHC-EP-0342
Addendum 29

UC-630

242-S Evaporator Steam Condensate Stream-Specific Report

Tank Farms Environmental Engineering

Date Published
August 1990

Prepared for the U.S. Department of Energy
Office of Environmental Restoration
and Waste Management

Westinghouse Hanford Company
P.O. Box 1970
Richland, Washington 99352

Hanford Operations and Engineering Contractor for the
U.S. Department of Energy under Contract DE-AC06-87RL10930

Approved for Public Release

THIS PAGE INTENTIONALLY
LEFT BLANK

242-S EVAPORATOR STEAM CONDENSATE

Tank Farms Environmental Engineering

ABSTRACT

The proposed wastestream designation for the 200 West Area 242-S Evaporator Steam Condensate wastestream is that this stream is not a dangerous waste, pursuant to the Washington (State) Administration Code (WAC) 173-303, Dangerous Waste Regulations.* *A combination of process knowledge and sampling data was used to make this determination.*

**Ecology, 1989, Dangerous Waste Regulations*, Washington (State) Administrative Code (WAC) 173-303, Washington State Department of Ecology, Olympia, Washington.

This page intentionally left blank.

EXECUTIVE SUMMARY

The proposed wastestream designation for the 200 West Area 242-S Evaporator Steam Condensate wastestream is that this stream is not a dangerous waste, pursuant to the Washington (State) Administrative Code (WAC) 173-303, *Dangerous Waste Regulations*.* A combination of process knowledge and present sampling data was used to determine if the effluent contains a listed dangerous waste (WAC 173-303-080). Sampling data alone is compared to the dangerous waste criteria (WAC 173-303-100) and dangerous waste characteristics (WAC 173-303-090). Process knowledge was based on knowledge of the process configuration and operations in the tank farm facilities (including the chemicals that are used). Sample data are based on samples downstream of all process contributors and consist of four random samples taken at one sampling point from October 26, 1989, to March 16, 1990. The sampling and process knowledge presented in this report is considered representative for the current 242-S Evaporator steam condensate wastestream configuration and no additional sampling efforts are recommended or required.

---

*Ecology, 1989, Dangerous Waste Regulations, Washington (State) Administrative Code (WAC 173-303), Washington (State) Department of Ecology, Olympia, Washington.

This page intentionally left blank.

LIST OF TERMS

CI	confidence interval
DOE	U.S. Department of Energy
DST	double-shell tank
Ecology	Washington State Department of Ecology
EP	extraction procedure
EPA	U.S. Environmental Protection Agency
HEPA	high-efficiency particulate air (filter)
HH	halogenated hydrocarbons
HVAC	heating, ventilation, and air conditioning
ISE	ion-specific
MSDS	Material Safety Data Sheet
PAH	polycyclic aromatic hydrocarbons
PCB	polychlorinated biphenyl
SARA	*Superfund Amendments and Reauthorization Act*
SSE	safe shutdown earthquake
UBC	Uniform Building Code
WAC	Washington (State) Administrative Code
%EC	percent equivalent concentration

This page intentionally left blank.

CONTENTS

1.0 INTRODUCTION 1-1
1.1 BACKGROUND 1-1
1.2 APPROACH 1-1
1.3 SCOPE 1-2

2.0 PROCESS KNOWLEDGE 2-1
2.1 PHYSICAL LAYOUT 2-1
2.2 CONTRIBUTORS 2-2
2.3 PROCESS DESCRIPTION 2-2
2.3.1 Present Activities 2-2
2.3.2 Past Activities 2-4
2.3.3 Future Activities 2-5
2.4 PROCESS DATA 2-5

3.0 SAMPLE DATA 3-1
3.1 DATA SOURCE 3-1
3.2 DATA PRESENTATION. 3-1

4.0 DATA OVERVIEW 4-1
4.1 DATA COMPARISON 4-1
4.2 STREAM DEPOSITION RATES 4-1

5.0 DESIGNATION 5-1
5.1 DANGEROUS WASTE LISTS 5-1
5.1.1 Discarded Chemical Products 5-1
5.1.2 Dangerous Waste Sources 5-3
5.2 LISTED WASTE DATA CONSIDERATIONS 5-3
5.2.1 Process Evaluation 5-3
5.2.2 Sampling Data 5-4
5.3 PROPOSED LISTED WASTE DESIGNATION 5-5
5.3.1 Discarded Chemical Products 5-5
5.3.2 Dangerous Waste Sources 5-6
5.4 DANGEROUS WASTE CRITERIA 5-6
5.4.1 Toxic Dangerous Wastes 5-6
5.4.2 Persistent Dangerous Wastes 5-7
5.4.3 Carcinogenic Dangerous Wastes 5-10
5.5 DANGEROUS WASTE CHARACTERISTICS 5-10
5.5.1 Ignitability 5-11
5.5.2 Corrosivity 5-11
5.5.3 Reactivity 5-11
5.5.4 Extraction Procedure Toxicity 5-11
5.6 PROPOSED DESIGNATIONS 5-11

6.0 ACTION PLAN 6-1

7.0 REFERENCES 7-1

CONTENTS (continued)

APPENDICES:

A 242-S Evaporator Steam Condensate Discharge A-1
B 242-S Sample Data (Recent Sampling Campaign) B-1
C 242-S Sample Data (Compilation of Existing Data) C-1

LIST OF FIGURES

1-1 Characterization Strategy. 1-4

1-2 Aerial View of the 242-S Evaporator. 1-5

1-3 Aerial View of the 216-U-14 Ditch 1-6

2-1 Current Process Configuration. 2-3

2-2 The R-C-1 Sampling System. 2-6

2-3 Past Process Configuration. 2-7

5-1 Illustration of the Designation Procedure. 5-2

LIST OF TABLES

1-1 Stream-Specific Characterization Reports 1-3

3-1 Detected Analytes Table 3-3

4-1 Summary of 200 West Area Raw Water and Sanitary Water Data . . . 4-2

4-2 Comparison of Chemical Sample Data to Raw Water Background . . . 4-4

4-3 Comparison of Chemical Data to Screening Guidelines. 4-5

4-4 Stream Deposition Rates 4-6

5-1 Dangerous Waste Designation Report for 242-S Evaporator Steam Condensate 5-8

This page intentionally left blank.

242-S EVAPORATOR STEAM CONDENSATE STREAM-SPECIFIC CHARACTERIZATION REPORT

1.0 INTRODUCTION

1.1 BACKGROUND

In response to the *Hanford Federal Facility Agreement and Consent Order* (Tri-Party Agreement) (Ecology et al. 1989), comments were received from the public about reducing the discharge of liquid effluents into the soil column. As a result, the U.S. Department of Energy (DOE), with the concurrence of the Washington State Department of Ecology (Ecology) and the U.S. Environmental Protection Agency (EPA), committed to assess the contaminant migration potential of liquid discharges at the Hanford Site (Lawrence 1989).

This assessment is described in the *Draft Liquid Effluent Study Project Plan* (WHC 1990a), a portion of which characterizes 33 liquid effluent streams. This characterization consists of integrating the following elements, pursuant to the Washington (State) Administrative Code, (WAC) 173-303 (Ecology 1989): process knowledge, sampling data, and dangerous waste regulations.

The results of the characterization study are documented in 33 separate reports, one report per wastestream. The complete list of stream-specific reports appears in Table 1-1. This document is one of the 33 reports.

1.2 APPROACH

This report characterizes the 200 West Area 242-S Evaporator Steam Condensate wastestream in sufficient detail so a wastestream designation, in accordance with WAC 173-303, can be proposed. This report also provides a means of assessing the relative effluent priorities with regard to the need for treatment and/or alternative disposal practices.

The characterization strategy undertaken in this report (shown in Figure 1-1) is implemented by means of the steps below.

1. Describe the current process based on the knowledge of the system and the chemical/radiological constituents that are known to be present. An historical perspective of the process configuration, along with future projects/upgrades, also has been presented so the reader can better understand the current status and current/future disposition of the effluent (Section 2.0).

2. Characterize the wastestream by presenting chemical and radioactive analytical results from samples taken over time in the wastestream (Section 3.0).

3. Compare characterization data obtained through both process knowledge and sampling information. Provide an estimate of stream loadings for radionuclides and chemical constituents based on these factors (Section 4.0).

4. Utilize the process knowledge and sample data to propose a dangerous waste designation (Section 5.0).

5. Identify new tasks needed to further characterize the wastestream, or to demonstrate continued compliance (Section 6.0).

1.3 SCOPE

This report is a characterization of the current 242-S Evaporator Steam Condensate effluents that enter the soil column at the 216-U-14 Ditch. The report does not address any other wastestream leaving the 242-S Evaporator such as solid, gaseous, or sanitary waste.

Historical changes, process campaign changes, and sampling data are considered only if relevant to the characterization of the wastestream as it presently exists. Future configuration/process modifications are addressed only if they will significantly alter the present effluent. An aerial view of the 242-S Evaporator and 216-U-14 Ditch are shown in Figures 1-2 and 1-3.

Table 1-1. Stream-Specific Characterization Reports.

WHC-EP-0342	Addendum 1	300 Area Process Wastewater
WHC-EP-0342	Addendum 2	PUREX Plant Chemical Sewer
WHC-EP-0342	Addendum 3	N Reactor Effluent
WHC-EP-0342	Addendum 4	163N Demineralization Plant Wastewater
WHC-EP-0342	Addendum 5	PUREX Plant Steam Condensate
WHC-EP-0342	Addendum 6	B Plant Chemical Sewer
WHC-EP-0342	Addendum 7	UO_3/U Plant Wastewater
WHC-EP-0342	Addendum 8	Plutonium Finishing Plant Wastewater
WHC-EP-0342	Addendum 9	S Plant Wastewater
WHC-EP-0342	Addendum 10	T Plant Wastewater
WHC-EP-0342	Addendum 11	2724-W Laundry Wastewater
WHC-EP-0342	Addendum 12	PUREX Plant Process Condensate
WHC-EP-0342	Addendum 13	222-S Laboratory Wastewater
WHC-EP-0342	Addendum 14	PUREX Plant Ammonia Scrubber Condensate
WHC-EP-0342	Addendum 15	242-A Evaporator Process Condensate
WHC-EP-0342	Addendum 16	B Plant Steam Condensate
WHC-EP-0342	Addendum 17	B Plant Process Condensate
WHC-EP-0342	Addendum 18	2101-M Laboratory Wastewater
WHC-EP-0342	Addendum 19	UO_3 Plant Process Condensate
WHC-EP-0342	Addendum 20	PUREX Plant Cooling Water
WHC-EP-0342	Addendum 21	242-A Evaporator Cooling Water
WHC-EP-0342	Addendum 22	B Plant Cooling Water
WHC-EP-0342	Addendum 23	241-A Tank Farm Cooling Water
WHC-EP-0342	Addendum 24	284-E Powerplant Wastewater
WHC-EP-0342	Addendum 25	244-AR Vault Cooling Water
WHC-EP-0342	Addendum 26	242-A Evaporator Steam Condensate
WHC-EP-0342	Addendum 27	284-W Powerplant Wastewater
WHC-EP-0342	Addendum 28	400 Area Secondary Cooling Water
WHC-EP-0342	Addendum 29	242-S Evaporator Steam Condensate
WHC-EP-0342	Addendum 30	241-AY/AZ Tank Farms Steam Condensate
WHC-EP-0342	Addendum 31	209-E Laboratory Reflector Water
WHC-EP-0342	Addendum 32	T Plant Laboratory Wastewater
WHC-EP-0342	Addendum 33	183-D Filter Backwash Wastewater

Figure 1-1. Characterization Strategy.

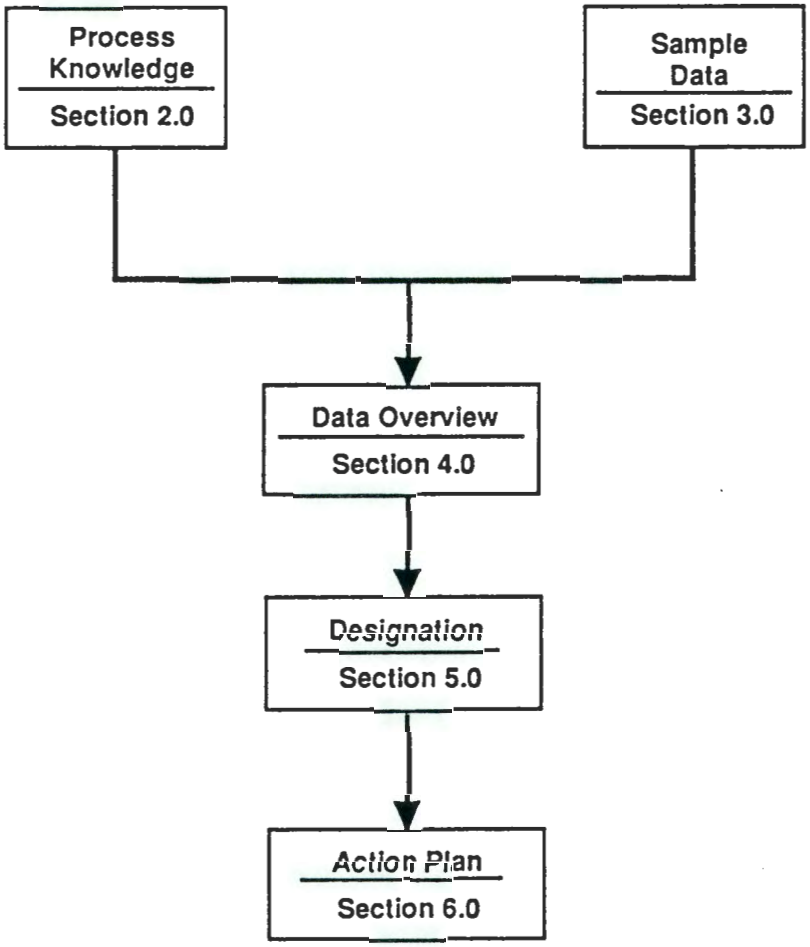

Figure 1-2. Aerial View of the 242-S Evaporator.

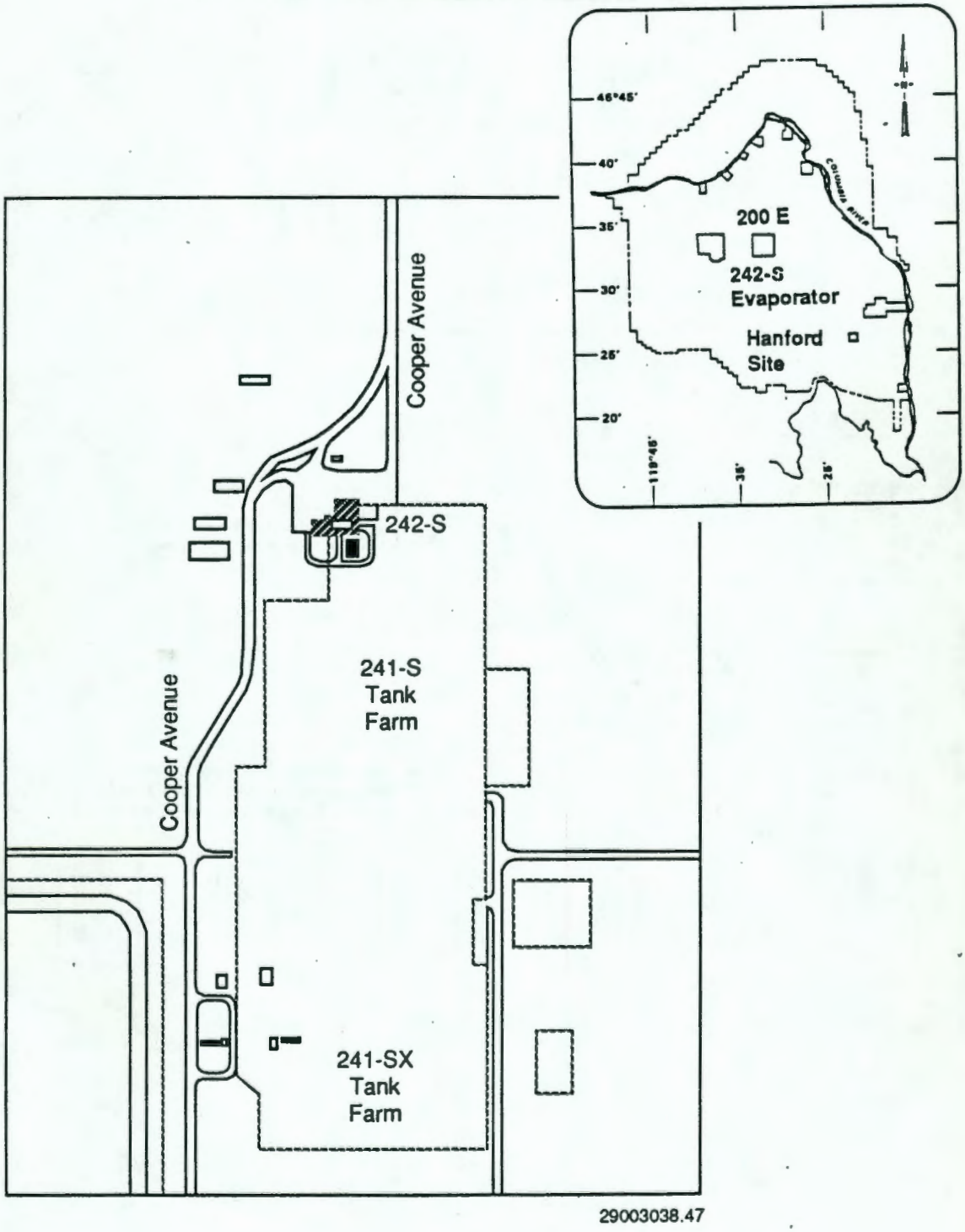

Figure 1-3. Aerial View of the 216-U-14 Ditch.

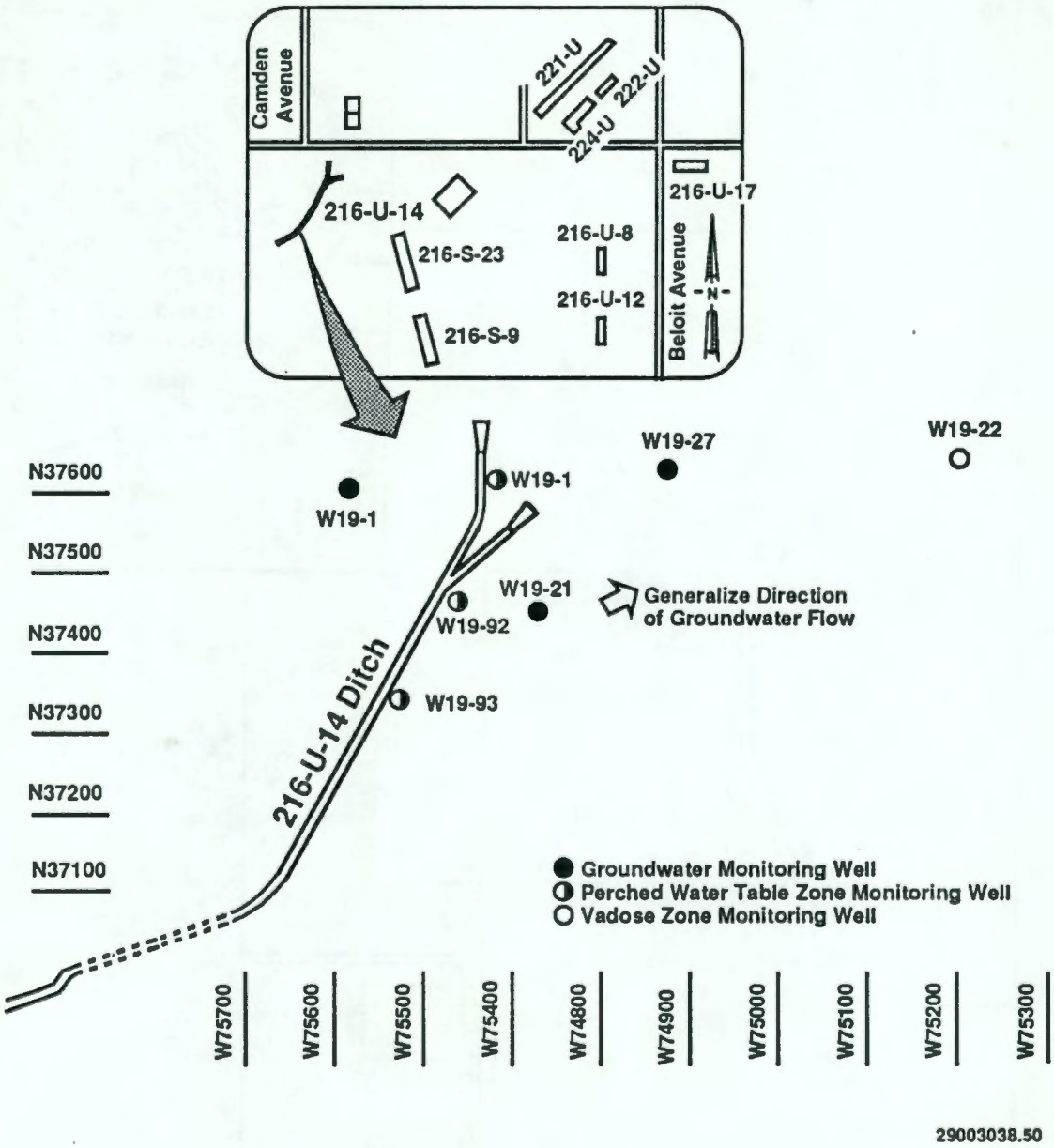

2.0 PROCESS KNOWLEDGE

This section presents a qualitative and quantitative process knowledge characterization of the chemical and radiological constituents of the 200 West Area 242-S Evaporator Steam Condensate wastestream. The process knowledge is discussed in terms of the following factors:

1. Location and physical layout of the process facility
2. The identity of the wastestream contributors
3. A general description of the present, past, and future activities of the process
4. The identity of constituents that are known to be present in each of the contributors.

2.1 PHYSICAL LAYOUT

The 242-S Evaporator facility, which is located in the 200 West Area of the Hanford Site, started operation in 1973, but has remained in a shutdown mode since 1980. The purpose of this facility was to reduce the volume of low-level, radioactive waste through evaporation and concentration. This reduces by 35 to 60% the number of double-shell tanks (DST) required to store this type of waste.

The 242-S Building contains the evaporator vessel and supporting process equipment. The building ventilation exhaust fans and high-efficiency particulate air (HEPA) filter housing are located on the south side of the building. Raw water, steam, and electrical power are provided to the 242-S Building from existing service facilities in the 200 West Area.

The principal process components of the evaporator-crystallizer system are located in the 242-S Building with supporting service and operating areas. The building comprises two adjoining but structurally independent structures, designated A and B. Structure A, which houses processing and service areas (evaporator room; heating, ventilation, and air conditioning [HVAC] room; etc.), is a reinforced concrete shear wall and slab structure, measuring 71 ft in height with horizontal dimensions of 25 ft by 22 ft. This structure is not accessible to personnel during radioactive solution processing and is constructed to withstand safe shutdown earthquake (SSE) ground motions in accordance with DOE-RL, 1989.

Structure B of the 242-S Building, which is separated from Structure A by a seismic joint, houses operating and personnel support areas (control room, lunchroom, etc.). The roof consists of metal decking supported by structural steel members spanning to reinforced concrete block walls. The

foundations for Structure B are continuous strip footings. This structure measures 11 ft in height with approximate horizontal dimensions of 42 ft by 47 ft and is constructed in accordance with Uniform Building Code (UBC) requirements.

2.2 CONTRIBUTORS

The current process configuration for the 242-S Evaporator Steam Condensate wastestream includes the vacuum pump seal water as the only active contributor. The flowrate of this contributor (and the overall stream) varies between 350 and 600 gal/h, with a mean of 450 gal/h. The actual flow of the wastestream during sampling was 550 gal/h, which is used in Section 4.0 for stream deposition.

2.3 PROCESS DESCRIPTION

The 242-S Evaporator/Crystallizer facility started up in November 1973. This facility was used to reduce the volume of radioactive liquid waste by evaporating water from the feed solution to produce a concentrated saltcake solution. This solution separated on cooling to form saltcake and residual liquor.

The 242-S Evaporator operated very successfully until it was shut down in November 1980. It was placed in shutdown/standby condition II in 1981, which included flushing and removing radioactive liquids from the facility. Although several activities occur in the 242-S Evaporator facility, no restart requirement has been identified for the 242-S Evaporator. The facility was placed in standby/shutdown condition III in 1985, and currently remains that way. Condition III requires that the building be maintained so it can be restarted; however, more than six months is required for startup.

2.3.1 Present Activities

The current configuration of the 242-S Evaporator Steam Condensate wastestream is shown in Figure 2-1. The only active contributor to this wastestream is the air-sampler pump seal water. This contributor leads to an overall flow of approximately 350 gal/h. Flow data for the wastestream are presented in Appendix A for the time period from 1985 to 1989.

The purpose of the air-sampler pump is to draw air samples from various areas of the 242-S Evaporator facility to identify abnormal levels of airborne radioactive material. The rooms that air samples are currently withdrawn from include the condenser room, aqueous makeup room, clothes changeroom, and the control room. The air line from each of these rooms has an in-line continuous air monitor that houses a beta-gamma radiation detector. When the detector indicates a pre-determined level above background radiation levels, then an alarm is activated. This alarm identifies to personnel a radioactive airborne concern in the room in question.

Figure 2-1. Current Process Configuration.

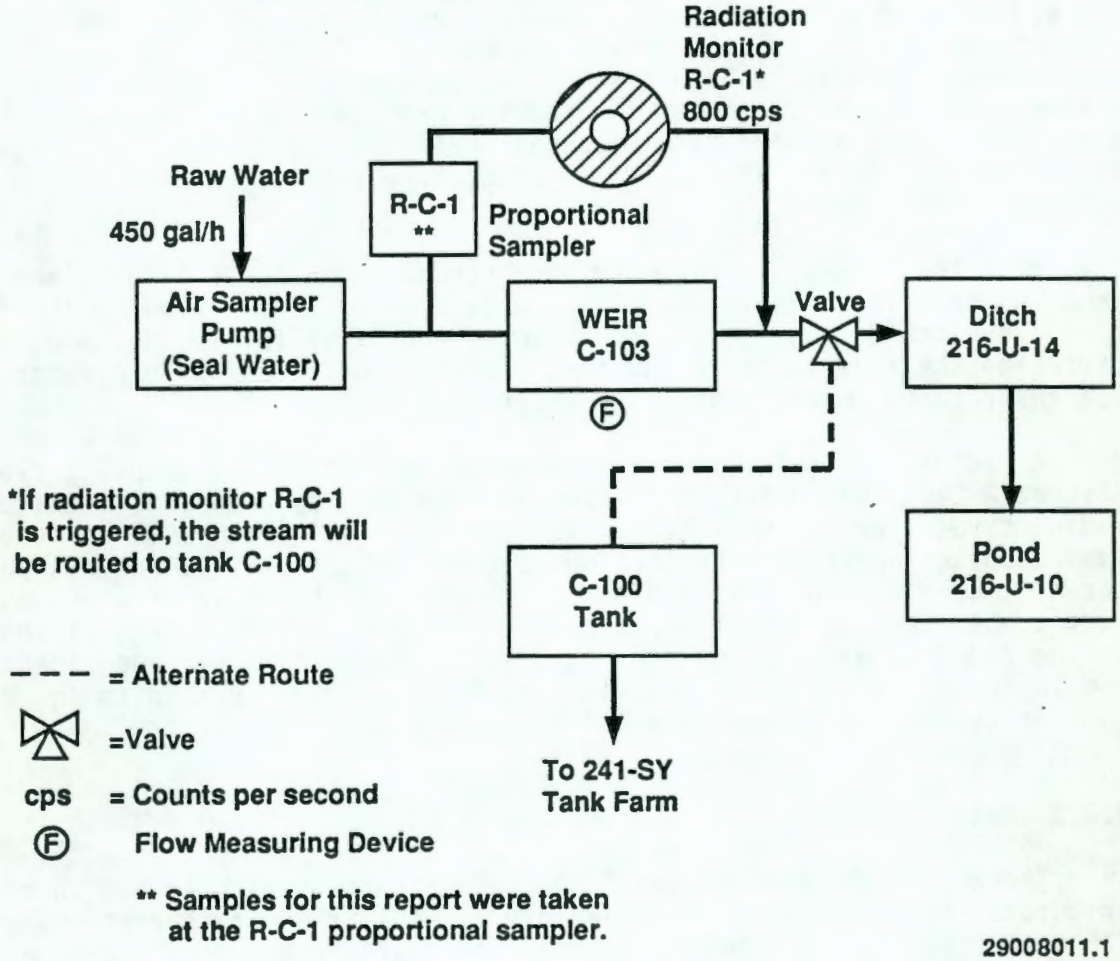

Raw water is used in the air-sampler pump to maintain a positive water seal within the pump. The raw water is supplied from the Columbia River via the 200 West Area Powerhouse. After leaving the vacuum pump, the water flows through a 500-gal flow-measuring weir (TK-C-103), which signals a proportional sampler to take a sample after a certain volume of water has passed over it. This sampler is used for process control purposes. When the proportional sampler is not operational, dip samples are taken daily for laboratory analysis. This point is also where samples were taken for the purpose of this report.

From the flow-measuring weir, the stream flows out a 4-in. diameter pipe to a two-way diversion valve. This valve diverts stream flow to the 216-U-14 Ditch during normal operations. The valve is also capable of diverting the flow to the C-100 tank (located in the 242-S Evaporator condenser room) in the case of an upset condition.

A radiation monitor is in place as part of the R-C-1 sampling system (Figure 2-2). This detector is used to identify any potential leaks of radioactive material into the wastestream. If radiation is detected by this gamma monitor above a pre-determined setpoint (currently 800 counts per second), then a signal is sent to the two-way diversion valve to cause the flow to be diverted to the C-100 tank. This prevents discharge of the stream to the 216-U-14 Ditch until the radiation contamination has been identified and the cause of the contamination corrected. Waste diverted to the C-100 tank is eventually pumped to a DST located in the SY tank farm.

2.3.2 Past Activities

The 242-S Evaporator Steam Condensate stream originally had four contributors that discharged approximately 17 Mgal/yr during operation to the 216-U-10 Pond via the 216-U-14 Ditch. The past process configuration is shown in Figure 2-3 with the four major contributors to the wastestream described below.

Reboiler Steam Condensate--Steam was required for the evaporation process to heat the process fluids for evaporation and concentration. Steam pressure was reduced in several stages to the necessary pressure before it entered the 16-in.-dia feed line to the reboiler. The steam temperature was then lowered to ensure saturation by adding filtered raw water before the steam was used in the reboiler. After passing through the reboiler, the steam condensate was discharged past an in-line radiation monitor at the flow measurement weir. A portion of the steam condensate was pumped from the weir through a proportional sampler and radiation monitor (RC1) and then returned to the steam condensate line downstream of the weir.

Steam Condensate and Raw Water from Heating and Cooling Jackets--Tanks AE101 and AE104 are equipped with jackets that allow the contents of the tanks to be maintained at desired temperatures. The flow out of these jackets is combined and discharged into the steam condensate effluent stream.

Purging System Steam Trap Condensate--A purging system is used to clear instrument piping needed to obtain specific gravity measurements of tank waste. The steam supply used for this system is equipped with a steam trap that drains into the steam condensate effluent stream.

Vacuum Pump Seal Water--The air-sampler pump configuration was similar to the system described in Section 2.3.1, with a different set of areas that air samples were drawn from. These rooms included the currently active rooms as well as the ion exchange column room, pump room, loading dock room, loadout and hot equipment storage room, building exhaust systems, and evaporator room. Raw water is used to maintain a positive water seal within the pump. This water mixes with the air samples before being separated and discharged to the steam condensate effluent stream.

The 242-S process did not involve the intentional addition of constituents to the steam condensate stream or to its contributors.

2.3.3 Future Activities

The evaporator is not expected to be utilized in the future. The proportional sampler for the remaining effluent stream is currently inoperative. Immediate plans are to get this piece of equipment repaired and back on line.

It is planned to replace the present air-sampling vacuum pump with an electric air-sampling pump. This replacement will eliminate the need for pump seal water and will lead to elimination of the 242-S Evaporator Steam Condensate wastestream. Funding to replace this pump is currently being pursued with replacement planned to occur in the next few years.

There are currently no plans for restart of the 242-S Evaporator, but it is currently being maintained in a standby state. If a future need were to cause the restart of this facility, then the discharge of the steam condensate wastestream would recommence in a configuration similar to its past configuration.

2.4 PROCESS DATA

No chemicals are intentionally added to the 242-S Evaporator Steam Condensate system. Chemicals expected to be detected in the wastestream are those present in the raw water utilized by the air-sampling pump.

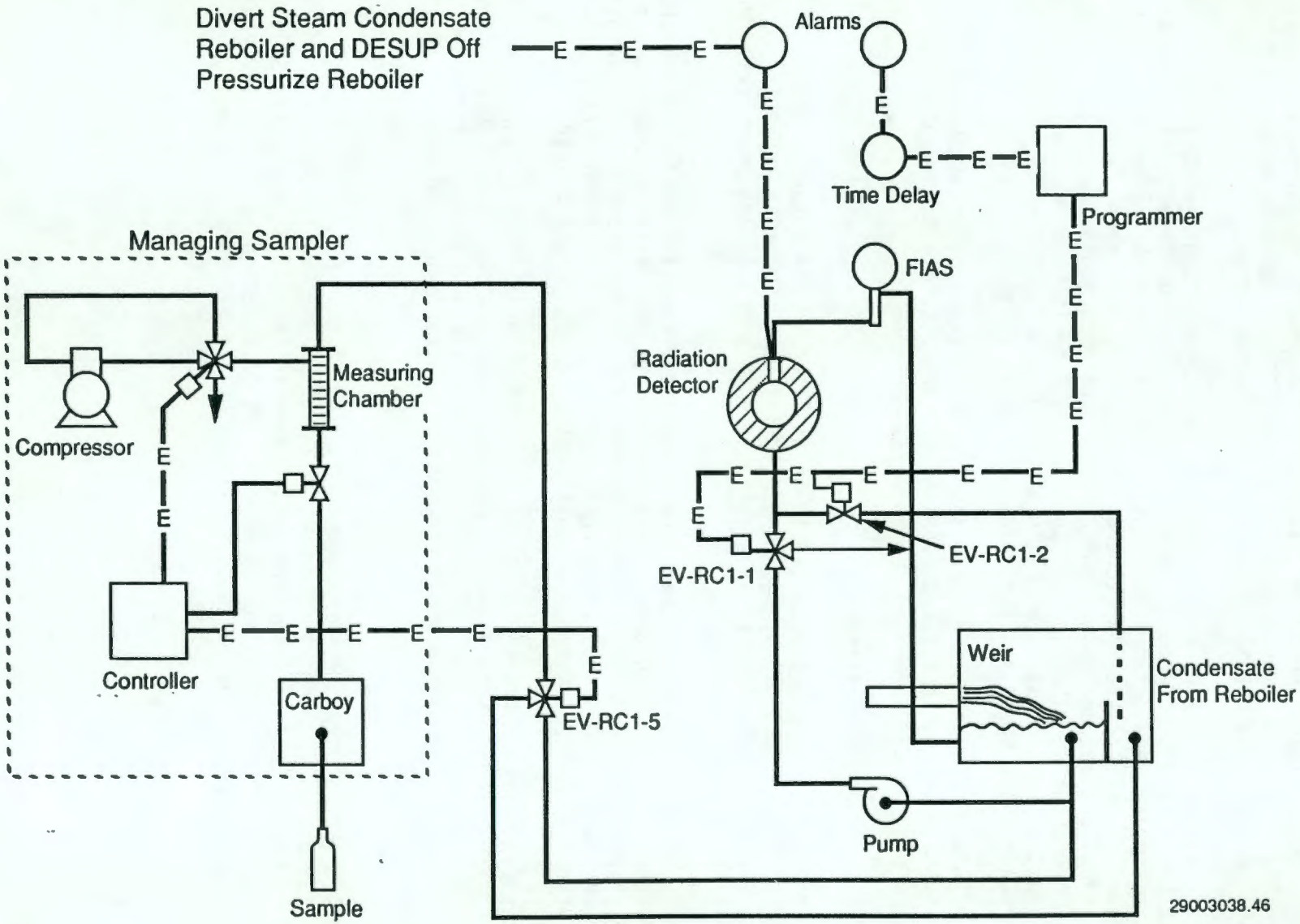

Figure 2-2. The R-C-1 Sampling System.

Figure 2-3. Past Process Configuration.

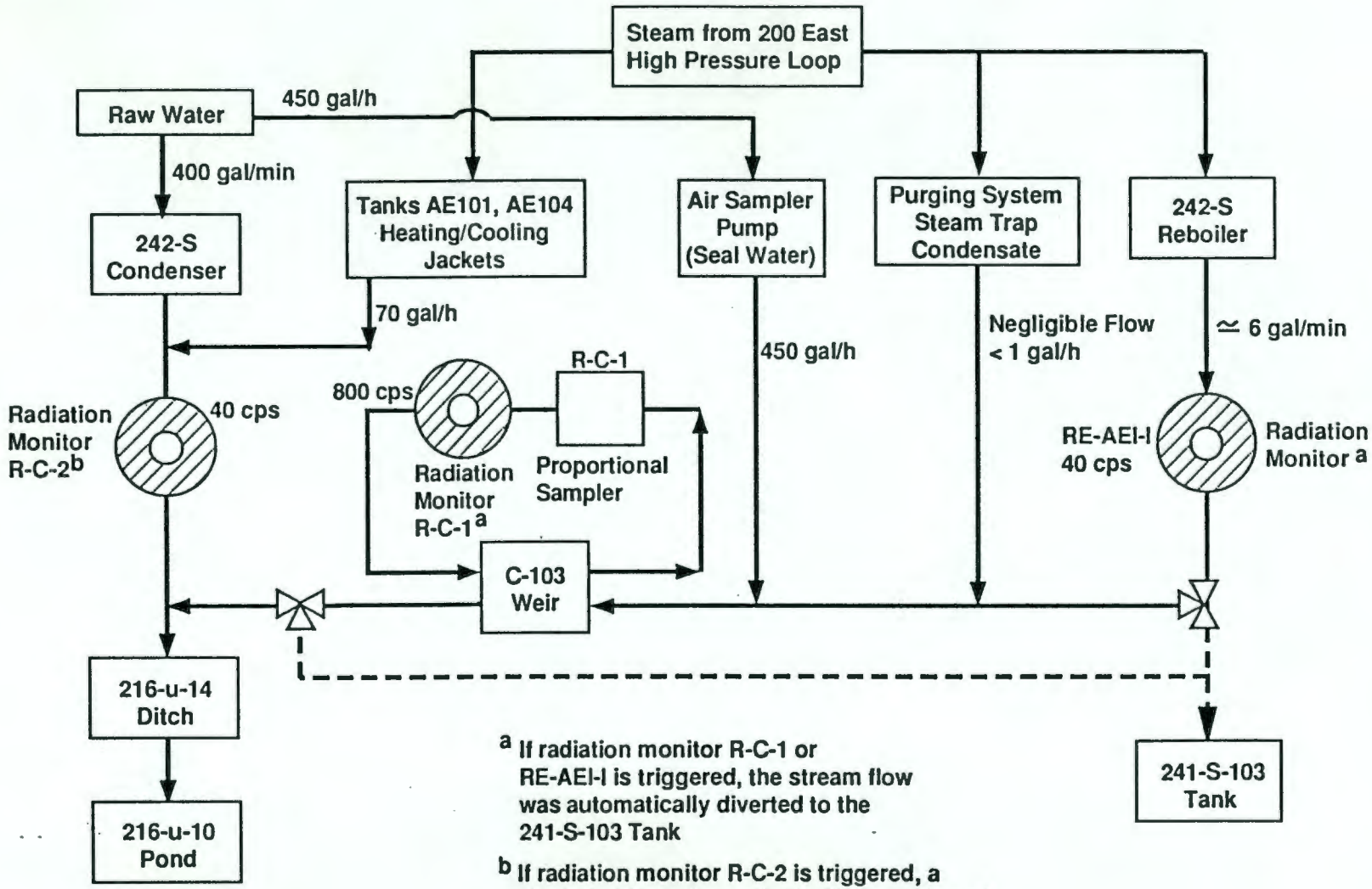

[a] If radiation monitor R-C-1 or RE-AEI-I is triggered, the stream flow was automatically diverted to the 241-S-103 Tank

[b] If radiation monitor R-C-2 is triggered, a plant shutdown is required. (This portion of the stream will only become contaminated if there is a major failure of the system.)

[c] Samples for this report were taken at the R-C-1 proportional sampler

This page intentionally left blank.

3.0 SAMPLE DATA

This section is intended to characterize the wastestream by presenting chemical and radioactive analytical results from samples taken over time. The discussion identifies the source of the sampling (Section 3.1) and addresses data presentation (Section 3.2).

3.1 DATA SOURCE

The chemical data used in this report were obtained from four samples taken during the October 26, 1989, to March 16, 1990 timeframe. The chemical data samples were taken at the R-C-1 sampler in the 242-S Evaporator condenser room on October 26, 1989, November 30, 1989, January 31, 1990, and March 16, 1990. These samples were all taken under the same process configuration as described in Section 2.3.1. This is the only current configuration for this wastestream and is therefore representative of the overall stream configuration.

The analysis of the samples was performed at the U.S. Testing Laboratory in Richland, Washington. Appendix B contains a complete listing of the analysis performed and data obtained from these sampling efforts. The EPA sampling and analytical protocols were followed in obtaining this chemical data about the steam condensate.

Chemical data also exist for sampling conducted between October 24, 1986, and May 22, 1987. The data from the earlier timeframe is not used for the designation purposes of this report. Both sets of data are presented in Appendix C in a combined tabular form for completeness of the report.

Process control sampling data are also available for the period from 1976 to 1988. The analysis of these samples was performed at the 222-S Laboratory and was intended for process control rather than environmental sampling. The designation process utilized in this report does not include the 222-S Laboratory data. The process control data were previously presented in WHC-EP-0287, *Waste Stream Characterization Report*, and are referenced here for completeness of this report.

3.2 DATA PRESENTATION

A total of 19 chemical analytes were detected in quantities greater than the minimum detectable concentrations and are presented in Table 3-1. Additional analytes presented include alkalinity, alpha activity, beta activity, conductivity, ignitability, pH, reactivity cyanide, reactivity sulfide, total dissolved solids, temperature, total organic carbon, total organic halides, ^{60}Co, ^{90}Sr, ^{234}U, and ^{238}U.

Table 3-1 is organized to provide for each analyte the mean concentration, standard error, 90% Confidence Interval (90%CI), and maximum concentration encountered in any of the samples.

Table 3-1. Detected Analytes Table. (sheet 1 of 2)

Constituent	N	MDA	Method	Mean	StdErr	90%CILim	Maximum
Arsenic (EP Toxic)	4	4	n/a	<5.00E+02	0.00E+00	<5.00E+02	<5.00E+02
Barium	4	0	n/a	3.00E+01	8.16E-01	3.13E+01	3.20E+01
Barium (EP Toxic)	4	4	n/a	<1.00E+03	0.00E+00	<1.00E+03	<1.00E+03
Boron	4	1	DL	1.60E+01	3.03E+00	2.10E+01	2.30E+01
Cadmium (EP Toxic)	4	4	n/a	<1.00E+02	0.00E+00	<1.00E+02	<1.00E+02
Calcium	4	0	n/a	1.92E+04	5.63E+02	2.02E+04	2.01E+04
Chloride	4	0	n/a	3.75E+03	7.18E+02	4.93E+03	5.50E+03
Chromium (EP Toxic)	4	4	n/a	<5.00E+02	0.00E+00	<5.00E+02	<5.00E+02
Copper	4	3	DL	1.07E+01	7.50E-01	1.20E+01	1.30E+01
Fluoride	4	0	n/a	2.50E+02	1.03E+02	4.18E+02	5.57E+02
Lead (EP Toxic)	4	4	n/a	<5.00E+02	0.00E+00	<5.00E+02	<5.00E+02
Magnesium	4	0	n/a	4.32E+03	1.36E+02	4.54E+03	4.69E+03
Mercury (EP Toxic)	4	4	n/a	<2.00E+01	0.00E+00	<2.00E+01	<2.00E+01
Nitrate	4	2	DL	5.00E+02	0.00E+00	5.00E+02	5.00E+02
Potassium	4	0	n/a	7.38E+02	7.93E+00	7.51E+02	7.54E+02
Selenium (EP Toxic)	4	4	n/a	<5.00E+02	0.00E+00	<5.00E+02	<5.00E+02
Silicon	4	0	n/a	2.16E+03	7.17E+01	2.27E+03	2.32E+03
Silver (EP Toxic)	4	4	n/a	<5.00E+02	0.00E+00	<5.00E+02	<5.00E+02
Sodium	4	0	n/a	2.16E+03	6.42E+01	2.27E+03	2.29E+03
Strontium	4	0	n/a	9.60E+01	1.08E+00	9.78E+01	9.90E+01
Sulfate	4	0	n/a	1.41E+04	4.18E+02	1.48E+04	1.48E+04
Uranium	3	0	n/a	2.99E-01	6.06E-02	4.13E-01	4.04E-01
Zinc	4	0	n/a	3.10E+01	5.52E+00	4.00E+01	4.50E+01
Ammonia	4	3	DL	5.00E+01	0.00E+00	5.00E+01	5.00E+01
Halogenated hydro-carbons	1	0	n/a	3.40E+01	n/a	n/a	3.40E+01
Trichloromethane	4	0	n/a	1.75E+01	3.20E+00	2.27E+01	2.70E+01
Unknown	1	0	n/a	5.20E+01	n/a	n/a	5.20E+01
Alkalinity (Method B)	4	0	n/a	5.62E+04	1.70E+03	5.90E+04	6.10E+04
Alpha Activity (pCi/L)	3	2	DL	5.33E-01	2.61E-01	1.03E+00	1.05E+00
Beta Activity (pCi/L)	3	2	DL	1.06E+00	6.52E-01	2.29E+00	2.36E+00
Conductivity (µS)	4	0	n/a	1.61E+02	2.38E+00	1.65E+02	1.68E+02
Ignitability (°F)	4	0	n/a	2.11E+02	1.29E+00	2.09E+02	2.08E+02
pH (dimensionless)	4	0	n/a	7.85E+00	1.17E-01	8.04E+00	8.00E+00
Reactivity Cyanide (mg/kg)	4	4	n/a	<1.00E+02	0.00E+00	<1.00E+02	<1.00E+02
Reactivity Sulfide (mg/kg)	4	4	n/a	<1.00E+02	0.00E+00	<1.00E+02	<1.00E+02
TDS	4	0	n/a	7.60E+04	3.49E+03	8.17E+04	8.40E+04
Temperature (°C)	4	0	n/a	2.11E+01	1.76E+00	2.40E+01	2.45E+01
Total Carbon	4	0	n/a	1.40E+04	4.95E+02	1.48E+04	1.49E+04
TOX (as Cl)	4	0	n/a	1.56E+02	1.60E+01	1.82E+02	1.94E+02

Table 3-1. Detected Analytes Table. (sheet 2 of 2)

Constituent	N	MDA	Method	Mean	StdErr	90%CILim	Maximum
^{60}Co (pCi/L)	2	0	n/a	8.22E-01	2.08E-01	1.46E+00	1.03E+00
^{90}Sr (pCi/L)	2	1	DL	1.79E-01	2.00E-02	2.41E-01	1.99E-01
^{234}U (pCi/L)	3	0	n/a	1.37E-01	3.16E-02	1.96E-01	1.89E-01
^{238}U (pCi/L)	3	0	n/a	1.08E-01	5.57E-03	1.18E-01	1.17E-01

Mean values, standard errors, confidence interval limits and maxima are in ppb (parts per billion) unless indicated otherwise.

The column headed MDA (Minimum Detectable Amount) is the number of results in each data set below the detection limit.

The column headed Method shows the MDA replacement method used: replacement by the detection limit (DL), replacement of single-valued MDAs by the log-normal plotting position method (LM), or replacement of multiple valued MDAs by the normal plotting position method (MR).

The column headed "90%CILim" (90% Confidence Interval Limit) is the lower limit of the one-tailed 90% confidence interval for all ignitability data sets and pH data sets with mean values below 7.25. For all other data sets it is the upper limit of the one-tailed 90% confidence interval.

The column headed "Maximum" is the minimum value in the data set for ignitability, the value furthest from 7.25 for pH, and the maximum value for all other analytes.

9112047085 7

4.0 DATA OVERVIEW

The purpose of this section is to compare the characterization data obtained through both process knowledge and sampling of the wastestream. This section will also provide an estimate of the stream loadings based on radionuclide and chemical constituents.

4.1 DATA COMPARISON

Process knowledge indicates that the steam condensate effluent should be similar to the raw water background because no chemicals are added to the stream. To confirm this, the sample data results were compared with the raw water background data mean. The 200 West Area raw water stream data are presented in Table 4-1.

To perform an adequate comparison, a ratio of the wastestream mean concentration and the raw water mean concentration has been utilized to determine analytes of interest. This comparison of the wastestream to the raw water is presented in Table 4-2. Two of the analytes, zinc and total organic halides, were shown to be present in concentrations significantly above that found in the background mean data.

Zinc was found at a concentration approximately 10 times higher than expected in raw water. Zinc is often found as a corrosion product originating in process vessels and piping. No zinc compounds are intentionally added to this wastestream.

Total organic halides were identified in a concentration approximately nine times higher than expected in raw water. No compounds are intentionally added to this wastestream that would lead to the presence of organic halides in this wastestream. Section 5.0 will discuss the designation of the stream due to the presence of organic and inorganic constituents.

Table 4-3 presents a comparison of average constituent concentrations to various screening criteria. These criteria are not used here for compliance purposes. The analytes presented in this table are those constituents that have a derived concentration guide/maximum concentration limit and were detected in the wastestream.

4.2 STREAM DEPOSITION RATES

Table 4-4 has been included to provide deposition rates using the average data from Table 3-1 adjusted according to flow data from Section 2.0.

Table 4-1. Summary of 200 West Area Raw Water and Sanitary Water Data (1985-1989). (sheet 1 of 2)

Constituent/Parameter [all ppb, exceptions noted]	Raw Water[a] (1986-1987) N[d]	AVG	STD DEV	Sanitary Water[b] (1985-1988) N	AVG	STD DEV	2724-W Laundry Sanitary Water[c] (1989) N	AVG	STD DEV
Alkalinity (Method B)				4	5.45E+04	5.78E+02			
Aluminum	5	1.78E+02	6.31E+01						
Arsenic				4	<5.00E+00	NA			
Arsenic (EP Toxic)							4	<5.00E+02	NA
Barium	5	2.94E+01	1.52E+00	4	*1.15E+02	1.91E+01	4	2.90E+01	1.41E+00
Barium (EP Toxic)							4	<1.00E+03	NA
Boron							4	1.77E+01	1.00E+01
Cadmium				4	<5.00E-01	NA			
Cadmium (EP Toxic)							4	<1.00E+02	NA
Calcium	5	1.76E+04	2.71E+03				4	1.87E+04	2.94E+02
Chromium				4	<1.00E+01	NA			
Chromium (EP Toxic)							4	<5.00E+02	NA
Chloride	5	8.25E+02	1.99E+02	4	2.35E+03	8.66E+02	4	2.92E+03	1.71E+02
Conductivity-field (μS)	5	9.40E+01	4.65E+01				4	1.45E+02	1.60E+01
Copper	5	1.52E+01	7.96E+00	4	<5.00E+01	NA			
Color (units)				4	*6.25E+00	2.50E+00			
Ignitability (°F)							4	2.11E+02	2.00E+00
Iron	5	1.14E+02	1.44E+02	4	*2.50E+02	2.68E+02	4	3.27E+01	3.40E+00
Fluoride	1	9.30E+01	NA	4	*1.08E+02	1.50E+01	4	1.28E+02	8.68E+00
Lead	3	8.13E+00	5.42E+00	4	<5.00E+00	NA			
Lead (EP Toxic)							4	<5.00E+02	NA
Magnesium	5	4.12E+03	5.41E+02				4	4.35E+03	1.59E+02
Manganese	5	1.68E+01	1.99E+01	4	<1.00E+01	NA			
Mercury				4	<5.00E-01	NA			
Mercury (EP Toxic)							4	<2.00E+01	NA
Nitrate (as N)				4	*8.50E+01	4.12E+01	4	5.00E+02	0.00E+00
pH (dimensionless)	5	6.52E+00	1.04E+00				4	7.10E+00	3.40E-01
Potassium	5	7.88E+02	4.25E+01				4	7.28E+02	5.44E+01
Reactivity Cyanide (mg/kg)							4	<1.00E+02	NA
Reactivity Sulfide (mg/kg)							4	<1.00E+02	NA
Selenium				4	<5.00E+00	NA			
Selenium (EP Toxic)							4	<5.00E+02	NA
Silicon							4	2.14E+03	1.02E+01
Silver				4	<1.00E+01	NA	4	1.00E+01	0.00E+00
Silver (EP Toxic)							4	<5.00E+02	NA

Table 4-1. Summary of 200 West Area Raw Water and Sanitary Water Data (1985-1989). (sheet 2 of 2)

Constituent/Parameter [all ppb, exceptions noted]	Raw Water[a] (1986-1987)			Sanitary Water[b] (1985-1988)			2724-W Laundry Sanitary Water[c] (1989)		
	N[d]	AVG	STD DEV	N	AVG	STD DEV	N	AVG	STD DEV
Sodium	5	2.23E+03	9.28E+01	4	2.20E+03	1.15E+02	4	2.05E+03	1.28E+02
Strontium							4	9.47E+01	3.00E+00
Sulfate	5	9.83E+03	1.40E+03	4	1.47E+04	1.16E+03	4	1.40E+04	4.44E+02
Sulfide	5	1.00E+03	8.63E-05						
Temperature-field (C)	5	1.48E+01	6.80E+00				4	1.31E+01	7.40E+00
Total Carbon (μg/g)							4	1.51E+04	1.71E+02
TOC (μg/g)	5	1.61E+03	4.76E+02						
TOX (μg (Cl)/L)	4	1.44E+01	8.30E+00				4	1.42E+02	1.30E+01
TDS (mg/L)				4	7.95E+01	1.28E+01	4	5.37E+04	3.06E+04
Trichloromethane							4	2.82E+01	7.94E+00
Uranium	5	5.21E-01	1.80E-01				3	2.54E-01	9.46E-02
Zinc	5	7.60E+00	8.94E-01	4	*1.03E+02	4.50E+01	4	5.85E+01	3.12E+01
Alpha Activity	5	2.34E+00	3.49E+00						
Beta Activity	5	1.05E+01	1.47E+01				3	4.33E+00	3.86E+00

NOTES: Averages denoted by an asterisk include a mix of above- and below-detection limit in computations when the actual values are below the detection limit.

See companion table for inorganic detection limits as compiled from Hanford Environmental Health Foundation.

[a]Compiled from "Substance Toxicity Evaluation of Waste Data Base" provided by F. M. Jungfleisch (this data is an update of the data presented in WHC 1988, *Preliminary Evaluation of Hanford Liquid Discharges*), Westinghouse Hanford Company, Richland, Washington.

[b]Compiled from HEHF, 1986, *Hanford Sanitary Water Quality Surveillance, CY 1985*, HEHF-55, Hanford Environmental Health Foundation, Environmental Health Sciences, Richland, Washington; HEHF-59; HEHF-71; and HEHF-74 (corresponding reports for CY 1986, 1987, and 1988).

[c]Data are from sampling campaign conducted October 1, 1989, to March 30, 1990, in support of Stream Specific Reports.

[d]N is defined as the number of test results available for a particular analyte; N may reflect both single and multiple data sets.

EP = extraction procedure.
ppb = parts per billion.
TOC = total organic carbon.
TOX = total organic halides.
μS = microsiemen.
μg = microgram.

Table 4-1. Summary of 200 West Area Raw Water and Sanitary Water Data (1985-1989). (sheet 2 of 2)

Table 4-2. Comparison of Chemical Sample Data to Raw Water Background (ppb unless otherwise stated; ratios are dimensionless).

Analyte	Sample Average	Raw Water Average	Ratio[a]
Alpha activity (pCi/L)	0.81	2.3	0.35
Beta activity (pCi/L)	5.2	10.5	0.50
Ammonium[b]	54	NA	---
Barium	26	29.4	0.88
Calcium	19,000	17,600	1.1
Chloride	3,300	NA	---
Chloroform	21	NA	---
Conductivity* (μS)	150	94.0	1.6
Iron[b]	71	114	0.62
Lead (GFAA)[b]	7.1	8.13	0.87
Magnesium	4,200	4,120	1.0
Manganese	16	16.8	0.95
Nitrate[b]	600	NA	---
pH Field	5.7	6.52	0.87
Potassium	880	788	1.1
Sodium	2,200	2,230	0.99
Sulfate	15,000	9,830	1.5
Sulfide[b]	1,000	1,000	1.0
Temperature (°C)	27	14.8	1.8
Total organic carbon	1,300	1,610	0.81
Total organic halides	130	14.4	9.0
Uranium	0.36	NA	---
Zinc	77	7.60	10.1

[a]Ratio is sample average to background average.

[b]Sample result is not an average. Analyte was detected in only one sample from the 242-S Evaporator Steam Condensate stream, with the result shown.

NA = not available. The analyte was not analyzed for in West Area raw water.

Table 4-3. Comparison of Chemical Data to Screening Guidelines.

Constituent	Result	SV1[b]	SV2[c]
Barium	3.0E-02	5.0E+00 g	
Chloride	3.7E+00	2.5E+02 h	
Copper	1.1E-02	1.0E+00 h	
Fluoride	2.5E-01	2.0E+00 g	
Nitrate	5.0E-01	4.5E+01 e	
Sulfate	1.4E+01	2.5E+02 h	
Zinc	3.1E-02	5.0E+00 h	
Trichloromethane[j]	1.8E-02	1.0E-01 g	
Alpha Activity (pCi/L)[n]	5.3E-01	1.5E+01 g	3.0E+01
Beta Activity (pCi/L)	1.1E+00		1.0E+03
^{60}Co (pCi/L)	8.2E-01	2.0E+02 e	5.0E+03
^{90}Sr (pCi/L)	1.8E-01	5.0E+01 e	1.0E+03
^{234}U (pCi/L)	1.4E-01		5.0E+02
^{238}U (pCi/L)	1.1E-01		6.0E+02
TDS	7.6E+01	5.0E+02 h	

[a]Units of results are mg/L unless indicated otherwise. The results are the mean values reported in the Statistics table of chapter 3.

[b]Screening Value 1 (SV1) lists the value first, basis second and an asterisk (*) third if the result exceeds the regulatory value. The basis is the proposed primary MCL (e), the proposed secondary MCL (f), the primary MCL (g), or the secondary MCL (h). The value is the smaller of two MCLs: the proposed primary MCL (or the primary MCL as a default) or the proposed secondary MCL (or the secondary MCL as a default). See WHC-EP-0342, "Hanford Site Stream-Specific Reports," August 1990.

[c]Screening Value 2 (SV2) lists the value first and an asterisk (*) second if the result exceeds the SV2). These values are derived concentration guides obtained from Appendix A of WHC-CM-7-5, "Environmental Compliance Manual," Revision 1, January 1990.

[j]The SV1 value for trihalomethanes is used to evaluate trichloromethane results.

[n]The SV1 and SV2 values for Gross Alpha are used to evaluate Alpha Activity.

[o]The SV2 for Gross Beta is used to evaluate Beta Activity.

Table 4-4. Stream Deposition Rates.
Flowrate: 1.62E+06 L/mo.

Constituent	Kg/L*	Kg/mo*
Barium	3.00E-08	4.85E-02
Boron	1.60E-08	2.59E-02
Calcium	1.92E-05	3.10E+01
Chloride	3.75E-06	6.06E+00
Copper	1.07E-08	1.73E-02
Fluoride	2.50E-07	4.04E-01
Magnesium	4.32E-06	6.98E+00
Nitrate	5.00E-07	8.08E-01
Potassium	7.38E-07	1.19E+00
Silicon	2.16E-06	3.49E+00
Sodium	2.16E-06	3.49E+00
Strontium	9.60E-08	1.55E-01
Sulfate	1.41E-05	2.28E+01
Uranium	2.99E-10	4.83E-04
Zinc	3.10E-08	5.01E-02
Ammonia	5.00E-08	8.08E-02
Halogenated hydrocarbons	3.40E-08	5.50E-02
Trichloromethane	1.75E-08	2.83E-02
Unknown	5.20E-08	8.41E-02
Alpha Activity *	5.33E-13	8.62E-07
Beta Activity *	1.06E-12	1.71E-06
TDS	7.60E-05	1.23E+02
Total Carbon	1.40E-05	2.26E+01
TOX (as Cl)	1.56E-07	2.52E-01
^{60}Co *	8.22E-13	1.33E-06
^{90}Sr *	1.79E-13	2.89E-07
^{234}U *	1.37E-13	2.21E-07
^{238}U *	1.08E-13	1.75E-07

Data collected from October 1989 through March 1990. Flowrate is the average of rates from Section 2.0. Constituent concentrations are average values from the Statistics Report in Section 3.0 (Table 3-1). Concentration units of flagged (*) constituents are reported as curies per liter. Deposition rate units of flagged (*) constituents are reported as curies per month.

5.0 DESIGNATION

The purpose of this section is to use process knowledge and sampling data to propose a designation of the wastestream in accordance with the requirements of the Dangerous Waste Regulations (WAC 173-303).

The evaluation of the 242-S Evaporator Steam Condensate wastestream performed to compose this report indicates that the wastestream should not be designated as a dangerous waste. This proposed designation uses data from both the process knowledge and sampling data (Sections 2.0 through 4.0) and complies with the designation requirements of WAC 173-303-070.

- Dangerous Waste Lists (WAC 173-303-080)
- Dangerous Waste Criteria (WAC 173-303-100)
- Dangerous Waste Characteristics (WAC 173-303-090).

The proposed designation is based upon the sample data collected between October 26, 1989, to March 16, 1990.

5.1 DANGEROUS WASTE LISTS

A waste is considered a listed dangerous waste if it either contains a discarded chemical product (WAC 173-303-081) or originates from a dangerous waste source (WAC 173-303-082). The proposed designation was based on a combination of process knowledge and sampling data.

5.1.1 Discarded Chemical Products

A wastestream constituent is a discarded chemical product (WAC 173-303-081) if it is listed in WAC 173-303-9903 and is characterized by one or more of the following descriptions.

- The listed constituent is the sole active ingredient in a commercial chemical product which has been discarded. Commercial chemical products which, as purchased, contain two or more active ingredients were not designated as discarded chemical products. Products which contained nonactive components such as water, however, were designated if the sole active ingredient in the mixture was listed in WAC 173-303-9903.

Figure 5-1. Illustration of the Designation Procedure.

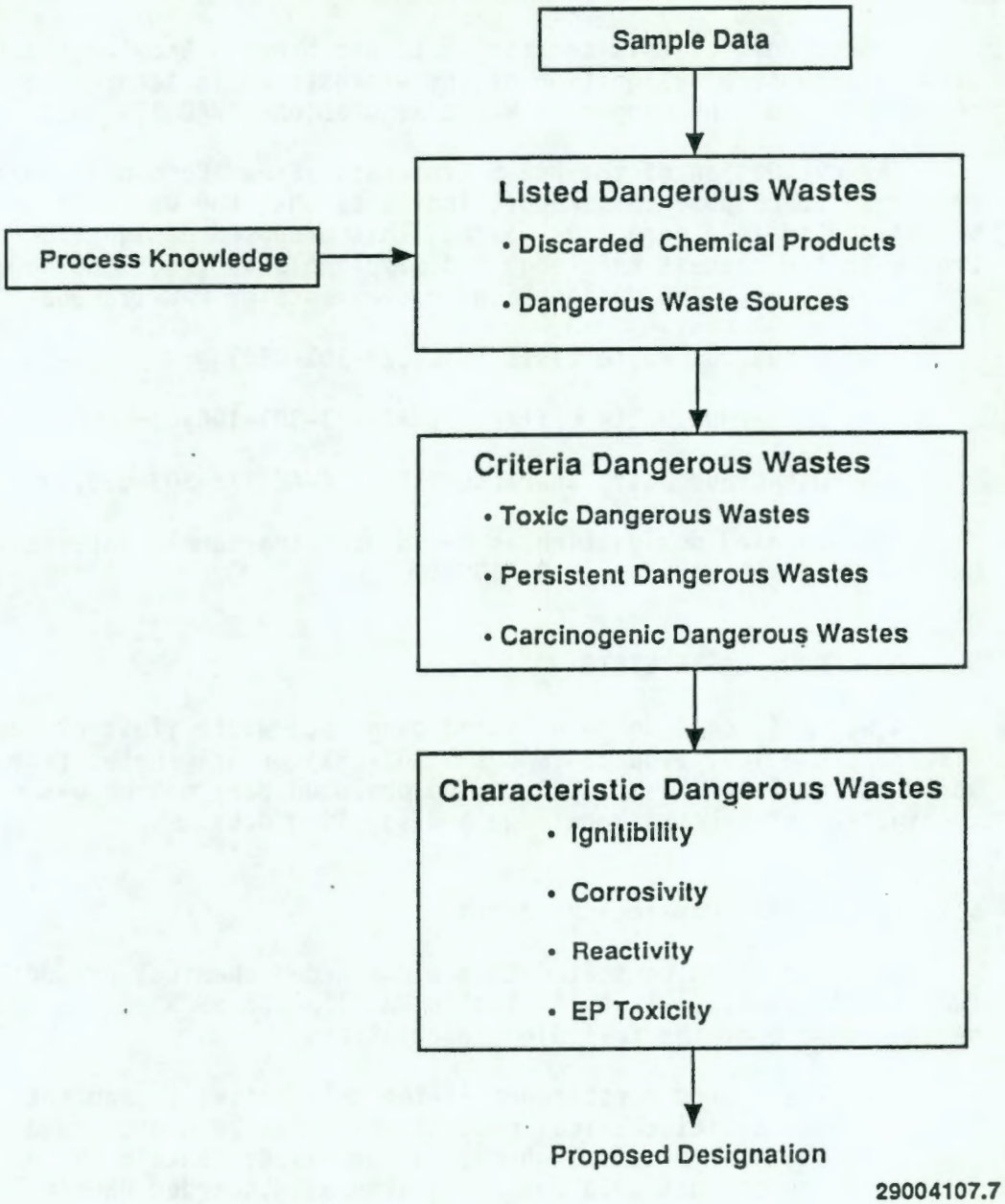

9 1 1 2 0 4 7 0 8 3 5

- The constituent results from a spill of unused commercial chemical products. (A spill of a discarded chemical product would cause a wastestream to be designated during the time that the discharge is occurring. The approach taken is that the current wastestream would not be designated unless a review of past spill events indicates that the spills are predictable, systematic events that are ongoing or are reasonably anticipated to occur in the future. In this report, the evaluation of this criterion is based on a review of spill data in accordance with the *Comprehensive Environmental Response, Compensation, and Liability Act*.)

- The constituent is discarded in the form of a residue resulting from cleanup of a spill of an unused commercial chemical product on the discarded chemical products list. (A chemical product that is used in a process and then released in a wastestream is not a discarded chemical product. Off-specification, unused chemicals, and chemicals that have exceeded a shelf life but have not been used are considered discarded chemical products.)

5.1.2 Dangerous Waste Sources

A list of dangerous waste sources is contained in WAC 173-303-9904, pursuant to WAC 173-303-082. There are three major categories of sources in WAC 173-303-9904. The first is nonspecific sources from routine operations occurring at many industries. The second is specific sources (e.g., wastes from ink formulation, etc.). The third is a state source which is limited to polychlorinated biphenyl (PCB)-contaminated transformers and capacitors resulting from salvaging, rebuilding, or discarding activities.

5.2 LISTED WASTE DATA CONSIDERATIONS

The proposed designation of the wastestream described in this report is based on an evaluation of process knowledge and sampling data. The following sections describe the types of information used in this designation.

5.2.1 Process Evaluation

The process evaluation began with a thorough review of the processes contributing to the wastestream. Processes were reviewed and compared with the discarded chemical products list and the dangerous waste source list. This process evaluation is necessary because the stream could be a listed waste if a listed waste was known to have been added at any upstream location,

even if a listed constituent was not detected at the sample point. The process evaluation included a review of the following information sources:

- Material Safety Data Sheets (MSDS)
- *Superfund Amendments and Reauthorization Act* (SARA) Title III Inventory reports
- Operating procedures
- Process chemical inventories
- Physical inspections, where possible.

If a listed chemical was identified, the specific use of the chemical was evaluated to determine if such use resulted in the generation of a listed waste.

5.2.2 Sampling Data

Sampling data were used as screening tools to enhance and support the results of the process evaluation. This screening compared the results of the sampling data with the WAC 173-303-9903 and -9904 lists. If a constituent was cited on one or both of these lists, an engineering evaluation was performed to determine if the constituent had entered the wastestream as a discarded chemical product or came from a dangerous waste source.

Screening organic constituents is a relatively simple procedure because analytical data for organic constituents are reported as substances and are easily compared to the WAC 173-303-9903 and -9904 lists. It is not as simple to screen inorganic analytical data because inorganic data are reported as ions or elements rather than as substances. For example, an analysis may show that a wastestream contains the cations sodium and calcium along with the anions chloride and nitrate. The possible combinations of substances in this simple example include sodium chloride, sodium nitrate, calcium chloride, and calcium nitrate. In a situation with many cation and anions, however, the list of possible combinations is extensive.

A procedure was developed by the Westinghouse Hanford Company for combining the inorganic constituents into substances. This screening procedure is described in WHC (1990b) and is intended to be a tool in the evaluation of a wastestream. The listing of the inorganic substances developed by this screening procedure is not intended to be an indication that the substance was discharged to the wastestream, only that the necessary cations and anions are present and an investigation should be conducted to determine how they entered the wastestream.

5.3 PROPOSED LISTED WASTE DESIGNATIONS

A process evaluation, along with a review of sampling data, indicated that the 242-S Evaporator Steam Condensate did not contain a discarded chemical product or a listed waste source. The following sections discuss the evaluation that was conducted to substantiate this conclusion in addition to the data comparison presented in Section 4.1.

5.3.1 Discarded Chemical Products

As discussed in Section 5.2, a process evaluation of the contributor to the 242-S Evaporator Steam Condensate was conducted. This evaluation included a review of MSDSs at the plant and chemical inventories compiled for compliance with the SARA Title III requirements for possible listed waste contributors. Chemical products used at the facility are not sources of listed wastes because there is no access for waste addition to the stream via floor drains.

Two potential discarded chemical products were identified from sampling data (using the screening procedure described in Section 5.2) as shown in Table 5-1. They are hydrogen fluoride and trichloromethane. Each of these will be discussed in the sections below.

Based on the considerations and data presented in the previous sections, it is concluded that the wastestream does not contain any discarded chemical products.

5.3.1.1 Hydrogen Fluoride. A review of tank farm chemical inventory data did not show hydrogen fluoride to be present in any chemical compound used within the tank farms.

The fluoride ion appeared in all four samples taken of the wastewater stream. The presence of this ion in the wastewater stream led to the identification of discarded hydrogen fluoride as a potential source of the fluoride.

The concentration of fluoride in the four samples of the wastewater averaged 139 pbb by the ion-specific (ISE) method. The rejection criteria for fluoride based on sanitary water supplied to the tank farms is 143 pbb (based on the ISE method) as presented in Section 5.2 of WHC-EP-0342. As the average concentration of fluoride seen in this wastewater stream is less than the rejection criteria, these data will not be considered in the designation of the wastestream. This is because fluoride is likely to be present in these wastestream samples due to the presence of fluoride in the facility water supply.

5.3.1.2 Chloroform (Trichloromethane). A review of tank farm chemical inventory data did not show chloroform to be present in any chemical compound used within the tank farms.

Chloroform appeared in all four samples taken of the wastewater stream. The concentration of chloroform in the wastewater samples ranged from 13 to 27 pbb. The rejection criteria for chloroform based on sanitary water supplied to the tank farms is 50 pbb, as presented in Section 5.2 of WHC-EP-0342. As the concentration of chloroform seen in all samples of this wastewater stream is less than the rejection criteria, these data will not be considered in the designation of the wastestream. This is because chloroform is likely to be present in these wastestream samples due to the presence of chloroform in the facility water supply.

5.3.2 Dangerous Waste Sources

The process evaluation (Section 5.2) was also used to determine if the wastestream included any specific waste sources (K and W wastes) or any nonspecific waste sources (F wastes) in the Dangerous Waste Source List, WAC 173-303-9904.

Sampling data were utilized to enhance the process evaluation. No potential listed solvents were identified by the sampling data.

Consequently, this wastestream does not have a dangerous waste source.

5.4 DANGEROUS WASTE CRITERIA

A waste is considered a dangerous waste if it meets any of the following criteria categories (WAC 173-303-100): toxic dangerous waste, persistent dangerous waste, or carcinogenic dangerous waste. A description of the methods used to test the sampling data against the criteria is contained in WHC 1990b. Summaries of the methods, along with the results, are contained in the following sections.

5.4.1 Toxic Dangerous Wastes

The procedure for determining if a wastestream is a toxic dangerous waste is below (WAC 173-303-101).

- Collect and analyze multiple samples from the wastestream.
- Calculate the upper limit of the one-sided 90%CI for each analyte in the wastestream.
- Formulate neutral substances from the analytical data.
  NOTE: This step is only required for inorganic analytes since it is not possible to complete the evaluation based on the concentration of cations and anions. This methodology is described in WHC 1990b and is based on an evaluation of the most toxic substances that can exist in an aqueous environment under normal temperatures and pressures.

- Assign toxic categories to the substances formulated for the wastestream.
- Calculate the contribution of each substance to the percent equivalent concentration (EC%).
- Calculate the EC% by summing the contributions of each substance.
- Designate the wastestream as a toxic dangerous waste if the EC% is greater than 0.001% in accordance with WAC 173-303-9906.

Thirteen substances potentially present in the 242-S Evaporator Steam Condensate stream were determined to have toxic categories associated with them. These substances are listed in Table 5-1. The individual and sum EC% values for these substances are listed in Table 5-1. Since the EC% is 1.03 E-06, which is less than the designation limit of 1.0 E-03 (i.e., 0.001%), the wastestream is not a toxic dangerous waste.

5.4.2 Persistent Dangerous Wastes

The procedure for determining if a wastestream is a persistent dangerous waste is below (WAC 173-303-102).

- Collect multiple grab samples of the wastestream.
- Determine which substances in the wastestream are halogenated hydrocarbons (HH) and which are polycyclic aromatic hydrocarbons (PAH).
- Determine the upper limit of the one-sided 90%CI for the compounds of interest.
- Calculate the percent concentration (wt%) for each HH and PAH separately.
- Sum the resulting weight percent contributions separately.
- Designate the wastestream as persistent if the HH% concentration is greater than 0.01% or if the PAH% is greater than 1.0% in accordance with WAC 173-303-9907.

Two substances present in the 242-S Evaporator Steam Condensate were determined to be HH and no chemical compounds were determined to be PAH. The HH% values for these chemical compounds are listed in Table 5-1. Since the HH% sum is 5.67 E-06%, which is less than the designation limit of 1.00 E-02% (i.e., 0.01%), the wastestream is not a persistent dangerous waste.

Table 5-1. Dangerous Waste Designation Report for 242-S Evaporator Steam Condensate. (sheet 1 of 2)

Dangerous Waste Data Designation Report for 242-S Evaporator Steam Condensate

Finding: Undesignated

Discarded Chemical Products - WAC 173-303-081

Substance	Review Number	Status	DW Number
Hydrogen fluoride	U134(DW)	Not Discarded	Undesignated
Trichloromethane	U044(EHW)	Not Discarded	Undesignated

Dangerous Waste Sources - WAC 173-303-082

Substance	Review Number	Status	DW Number
None	None	Not applicable	None

Infectous Dangerous Waste - WAC 173-303-083

No regulatory guidance

Dangerous Waste Mixtures - WAC 173-303-084

Substance	Toxic EC%	Persistant HH%	Persistant PAH%	Carcinogenic Total%
Barium chloride	4.75E-09	0.00E+00	0.00E+00	0.00E+00
Calcium tetraborate	2.22E-09	0.00E+00	0.00E+00	0.00E+00
Copper(II) chloride	2.53E-07	0.00E+00	0.00E+00	0.00E+00
Magnesium chloride	1.55E-07	0.00E+00	0.00E+00	0.00E+00
Magnesium nitrate	1.39E-08	0.00E+00	0.00E+00	0.00E+00
Magnesium sulfate	1.87E-08	0.00E+00	0.00E+00	0.00E+00
Potassium fluoride	1.12E-07	0.00E+00	0.00E+00	0.00E+00
Sodium fluoride	1.36E-07	0.00E+00	0.00E+00	0.00E+00
Sodium metasilicate	4.05E-08	0.00E+00	0.00E+00	0.00E+00
Uranyl nitrate	6.84E-10	0.00E+00	0.00E+00	0.00E+00
Zinc nitrate	1.16E-08	0.00E+00	0.00E+00	0.00E+00
Ammonia	5.00E-08	0.00E+00	0.00E+00	0.00E+00
*Halogenated hydrocarbons	0.00E+00	3.40E-06	0.00E+00	0.00E+00
Trichloromethane	2.27E-07	2.27E-06	0.00E+00	2.27E-06
Total	1.03E-06	5.67E-06	0.00E+00	2.27E-06
DW Number	Undesignated	Undesignated	Undesignated	Undesignated

Dangerous Waste Characteristics - WAC 173-303-090

Characteristic	Value	DW Number
Ignitability (Degrees F)	>208	Undesignated
Corrosivity-pH	8.04	Undesignated
Reactivity Cyanide (mg/kg)	<1.00E+02	Undesignated
Reactivity Sulfide (mg/kg)	<1.00E+02	Undesignated
EP Toxic Arsenic (mg/L)	<5.00E-01	Undesignated
EP Toxic Barium (mg/L)	<1.00E+00	Undesignated
EP Toxic Cadmium (mg/L)	<1.00E-01	Undesignated
EP Toxic Chromium (mg/L)	<5.00E-01	Undesignated
EP Toxic Lead (mg/L)	<5.00E-01	Undesignated
EP Toxic Mercury (mg/L)	<2.00E-02	Undesignated
EP Toxic Selenium (mg/L)	<5.00E-01	Undesignated
EP Toxic Silver (mg/L)	<5.00E-01	Undesignated

Table 5-1. Dangerous Waste Designation Report for 242-S Evaporator Steam Condensate. (sheet 2 of 2)

Dangerous Waste Data Designation Report for 242-S Evaporator Steam Condensate

Dangerous Waste Criteria - WAC 173-303-100

Substance	Toxic EC%	Persistant HH%	Persistant PAH%	Carcinogenic Total%	DW Number-Positive
Barium chloride	4.75E-09	0.00E+00	0.00E+00	0.00E+00	
Calcium tetraborate	2.22E-09	0.00E+00	0.00E+00	0.00E+00	
Copper(II) chloride	2.53E-07	0.00E+00	0.00E+00	0.00E+00	
Magnesium chloride	1.55E-07	0.00E+00	0.00E+00	0.00E+00	
Magnesium nitrate	1.39E-08	0.00E+00	0.00E+00	0.00E+00	
Magnesium sulfate	1.87E-08	0.00E+00	0.00E+00	0.00E+00	
Potassium fluoride	1.12E-07	0.00E+00	0.00E+00	0.00E+00	
Sodium fluoride	1.36E-07	0.00E+00	0.00E+00	0.00E+00	
Sodium metasilicate	4.05E-08	0.00E+00	0.00E+00	0.00E+00	
Uranyl nitrate	6.84E-10	0.00E+00	0.00E+00	0.00E+00	
Zinc nitrate	1.16E-08	0.00E+00	0.00E+00	0.00E+00	
Ammonia	5.00E-08	0.00E+00	0.00E+00	0.00E+00	
*Halogenated hydrocarbons	0.00E+00	3.40E-06	0.00E+00	0.00E+00	
Trichloromethane	2.27E-07	2.27E-06	0.00E+00	2.27E-06	Undesignated
Total	1.03E-06	5.67E-06	0.00E+00	2.27E-06	
DW Number	Undesignated	Undesignated	Undesignated	Undesignated	

Dangerous Waste Constituents - WAC 173-303-9905

Substance
Hydrogen fluoride
Trichloromethane
Barium and compounds,NOS

Substance names may include MB (monobasic), DB (dibasic), or TB (tribasic) to identify the equivalence of hydrogen ion that have been nutralized from polyprotic weak acids to form their conjugate bases.

Results based on a single datum are noted by an asterisk (*). Others are based on the lower limit of the one-tailed 90% confidence interval for pH data sets with mean values below 7.25 or by the upper limit of the one-tailed 90% confidence interval for all other data sets.

EP Toxic contaminants, ignitability, and reactivity are reported by standard methods when available. In the absence of EP Toxicity data, total contaminant concentrations are evaluated. In lieu of closed cup ignition results, ignitability is estimated from the sum of the contributions of all substances that are ignitable when pure. A waste is flagged as dangerous if sum of the ignitable substances exceeds one percent. Reactivity is by SW-846: 250 mg of cyanide as hydrogen cyanide per kg of waste or 500 mg of sulfide as hydrogen sulfide per kg of waste. Total cyanide and total sulfide are used in lieu of amenable cyanide and amenable sulfide.

Inorganic substances are fomulated and their possible concentrations calculated for designation purposes only. The actual existance in the waste of these substances is not implied and should not be infered.

5.4.3 Carcinogenic Dangerous Wastes

The procedure for determining if a wastestream is a carcinogenic dangerous waste is below (WAC 173-303-103).

- Collect multiple grab samples of the wastestream.
- Determine the upper limit of the one-sided 90%CI for the substances of interest.
- Formulate substances from the analytical data. NOTE: This step is only required for inorganic analytes since it is not possible to complete the evaluation based on the concentration of cations and anions. This methodology is described in WHC 1990b and is based on an evaluation of the carcinogenic compounds that can exist in an aqueous environment under normal temperatures and pressures.
- Determine which substances in the wastestream are human or animal carcinogens according to the International Agency for Research on Cancer.
- Calculate the weight percent concentration for each carcinogen.
- Sum the resulting weight percent contributions.
- Designate the wastestream as carcinogenic if any of the carcinogens are above 0.01% or if the total concentration for positive and suspected (human or animal) carcinogens is above 1.0%.

One carcinogenic substance, chloroform, was identified as being potentially present in the 242-S Evaporator Steam Condensate. The value for this substance is listed in Table 5-1. Since this value is less than the designation limit of 1.00 E-02%, the 242-S Evaporator Steam Condensate is not a carcinogenic dangerous waste.

5.5 DANGEROUS WASTE CHARACTERISTICS

A waste is considered a dangerous waste if it is ignitable, corrosive, reactive, or extraction procedure (EP) toxic (WAC 173-303-090). A description of the methods used to evaluate the data in terms of these characteristics is contained in WHC (1990b). Summaries of the methods, along with the results, are in the following sections.

5.5.1 Ignitability

Flashpoint testing was performed on the samples from this liquid effluent stream. Table 5-1 shows an ignitability temperature greater than 208 °F. This value is greater than the 140 °F designation limit, which verifies that this stream is not designated for the ignitability characteristic.

5.5.2 Corrosivity

A waste is a corrosive dangerous waste if the stream exhibited a pH of $\leq$2.0 or $\geq$12.5. The comparison to this characteristic was based on the lower limit of the 90%CI for a stream with a mean value of pH <7.25 and the upper limit of the one-sided 90%CI for a stream with a mean value of pH $\geq$7.25.

The 90%CI value of the pH measurements for the 242-S Evaporator Steam Condensate is 8.04, which precludes the wastestream from being considered a corrosive dangerous waste (WAC 173-303-090[6]).

5.5.3 Reactivity

An aqueous waste is reactive if the waste contains an amount of cyanide or sulfide under conditions near corrosivity sufficient to threaten human health or the environment (WAC 173-303-090[7]). A recent revision to *Test Methods for Evaluating Solid Waste* (SW-846) (EPA 1986a) provides a more quantitative indicator level for cyanide and sulfide. It states that levels of (equivalent) HCN below 250 mg/kg or of (equivalent) H_2S below 500 mg/kg would not be considered reactive. This revised SW-846 procedure was used for samples collected for this wastestream.

Reactive cyanide and reactive sulfide were both less than detectable (100 mg/kg) for this wastestream as shown by Table 5-1. This wastestream is not a reactive dangerous waste.

5.5.4 Extraction Procedure Toxicity

A waste is an EP toxic dangerous waste if contaminant results from EP toxicity testing exceed the limits of WAC 173-303-090[8](c). All eight analytes on the EP toxic list were found to be below detectable limits in the 242-S Evaporator Steam Condensate. This wastestream is not considered an EP toxic dangerous waste based on the data presented in Table 5-1.

5.6 PROPOSED DESIGNATIONS

Because the 242-S Evaporator Steam Condensate wastestream does not contain any dangerous waste, as defined in WAC 173-303-070, it is proposed that the wastestream be designated as a non-dangerous waste.

This page intentionally left blank.

9 1 1 2 0 4 7 0 9 7 5

6.0 ACTION PLAN

This purpose of this section is to address recommendations for future waste characterization tasks for this wastestream. The final extent of and schedule for any recommended tasks are subject to negotiation between Ecology, the EPA, and DOE. An implementation schedule for the completion of these tasks will give consideration to other compliance actions already underway as part of the Tri-Party Agreement (Ecology et al. 1989), and on the availability of funding. All effluent monitoring and sampling will be conducted according to DOE 1988.

6.1 FUTURE SAMPLING

The sampling used in this report was performed during the recent sampling campaign of October 1989 to March 1990. This sampling covered the only current process configuration for this wastestream. Current projections do not call for the 242-S Evaporator to restart in order to concentrate waste. Should the need be identified for the facility to become operational, additional sampling of this wastestream will be performed in the new process configuration.

6.2 TECHNICAL ISSUES

As described in Section 2.0, the effluent was sampled downstream of the only contributor that exists for this wastestream. This prevents the potential for dilution of the stream prior to the sampling point.

The samples collected at this point are considered to be representative of the types of constituents present in the contributing wastestream. As a result, the characterization data presented in this report are considered to be representative of the effluent stream.

This page intentionally left blank.

7.0 REFERENCES

APHA, 1985, *Standard Methods for the Examination of Water and Wastewater*, Sixteenth Edition, American Public Health Association, American Water Works Association and Water Pollution Control Federal, Washington, D.C.

ASTM, 1986, *1986 Book of ASTM Standards*, American Society of Testing and Materials, Philadelphia, Pennsylvania.

Comprehensive Environmental Response, Compensation, and Liability Act of 1980, as amended, Public Law 96-510, 94 Stat. 2767, 42 USC 9601 et seq.

DOE, 1988, *General Environmental Protection Program*, DOE Order 5400.1.

DOE-RL, 1989, *Architectural-Civil Design Criteria*, "Design Loads for Facilities," SDC-4.1, U.S. Department of Energy, Richland, Washington.

Ecology, 1989, *Dangerous Waste Regulations*, Washington (State) Administrative Code (WAC) 173-303, Washington State Department of Ecology, Olympia, Washington.

Ecology, EPA and DOE, 1989, *Hanford Federal Facility Agreement and Consent Order*, U.S. Environmental Protection Agency, Region 10, and U.S. Department of Energy, Washington State Department of Ecology, Olympia, Washington.

EPA, 1986a, *Test Methods for Evaluating Solid Waste*, SW-846, 3rd Edition, U.S. Environmental Protection Agency, Washington, D.C.

Lawrence, M. J., "Liquid Effluent Study," (External Letter 8902106 to C. Gregoire, Washington State Department of Ecology; and R. Russell, U.S. Environmental Protection Agency), U.S. Department of Energy, Richland, Washington, May 13, 1989.

Somers, S., 1989, *Hanford Sanitary Water Quality Surveillance, CY 1988*, HEHF-74, Hanford Environmental Health Foundation, Richland, Washington.

Somers, S., 1988, *Hanford Sanitary Water Quality Surveillance, CY 1987*, HEHF-71, Hanford Environmental Health Foundation, Richland, Washington.

Somers, S., 1987, *Hanford Sanitary Water Quality Surveillance, CY 1986*, HEHF-59, Hanford Environmental Health Foundation, Richland, Washington.

Somers, S., 1986, *Hanford Sanitary Water Quality Surveillance, CY 1985*, HEHF-55, Hanford Environmental Health Foundation, Richland, Washington.

Thurman, P. A., 1990, *Hanford Sanitary Water Quality Surveillance, CY 1989*, HEHF-76, Hanford Environmental Health Foundation, Richland, Washington.

WHC, 1990a, *Liquid Effluent Study Project Plan*, WHC-EP-0275 Rev. 2, Westinghouse Hanford Company, Richland, Washington.

WHC, 1990b, *Wastestream Designation of Liquid Effluent Analytical Data*, WHC-EP-0334, Westinghouse Hanford Company, Richland, Washington.

WHC, 1989, *Waste Stream Characterization Report*, WHC-EP-0287, Volumes 1 through 4, Westinghouse Hanford Company, Richland, Washington.

WHC, 1988a, *Environmental Compliance Manual*, WHC-CM-7-5, Westinghouse Hanford Company, Richland, Washington.

WHC, 1988b, *Preliminary Evaluation of Hanford Liquid Discharges to the Ground*, WHC-EP-0052, Westinghouse Hanford Company, Richland, Washington.

APPENDIX A

242-S EVAPORATOR STEAM CONDENSATE DISCHARGE

This page intentionally left blank.

Table A-1. 242-S Evaporator Steam Condensate Discharge.
(October 1984 to September 1989)
(thousands of gallons)

Month	Fiscal year				
	1985	1986	1987	1988	1989
October	406	465	329	367	287
November	363	419	231	343	323
December	263	467	195	333	322
January	241	415	200	280	289
February	372	366	226	219	257
March	407	390	208	288	272
April	303	314	251	308	313
May	391	298	271	352	309
June	254	347	351	333	367
July	465	377	433	346	412
August	465	361	369	337	446
September	450	347	361	269	308
Totals	4,381	4,566	3,425	3,775	3,905

This page intentionally left blank.

APPENDIX B

242-S SAMPLE DATA
(Recent Sampling Campaign)

OCTOBER 26, 1989, TO MARCH 16, 1990

This page intentionally left blank.

B.1 SAMPLING/ANALYTE INFORMATION

LEAD#	50729	50820	50915	51060
C of C#	50729	50820	50915	51060
Alkalinity	X	X	X	X
Alpha counting	X	X		X
Alpha energy analysis	X	X		X
Ammonia	X	X	X	X
Arsenic	X	X	X	X
Atomic emission spectroscopy	X	X	X	X
Beta counting	X	X		X
^{14}C	X	X		X
Conductivity-field	X	X	X	X
Cyanide	X	X	X	X
Direct aqueous injection (GC)	X	X	X	X
Fluoride (LDL)	X	X	X	X
Gamma energy analysis	X			X
Hydrazine	X	X	X	X
Ion chromatography	X	X	X	X
Lead	X	X	X	X
Low-energy photon detection				X
Mercury	X	X	X	X
pH-field	X	X	X	X
Selenium	X	X	X	X
Semivolatile organics (GC/MS)	X	X	X	X
Strontium beta counting	X	X		X
Sulfide	X	X	X	X
Suspended solids	X	X	X	X
Temperature-field	X	X	X	X
Thallium	X	X	X	X
Total carbon	X	X	X	X
Total dissolved solids	X	X	X	X
Total organic carbon	X	X	X	X
Total organic halides (LDL)	X	X	X	X
Total radium alpha counting	X	X		X
Tritium	X			X
Uranium	X	X		X
Volatile organics (GC/MS)	X	X	X	X

LEAD#	50729B	50915B	51060B
C of C#	50730	50916	51061
Volatile organics (GC/MS)	X	X	X

LEAD#	50729T	50915T	51060T
C of C#	50731	50917	51062
Volatile organics (GC/MS)	X	X	X

LEAD#	50729E	50820E	50915E	51060E
C of C#	50732	50821	50918	51063
Atomic emission spectroscopy	X	X	X	X
Ignitability	X	X	X	X
Mercury (mixed matrix)	X	X	X	X
Reactive cyanide	X	X	X	X
Reactive sulfide	X	X	X	X

Notes: Procedures that were performed for a given sample are identified by an "X". Procedure references appear with the data. LEAD# is the Liquid Effluent Analytical Data number that appears in the data reports. C of C# is the chain-of-custody number.

Abbreviations:
GC = gas chromatography.
LDL = low-detection limit.
MS = mass spectrometry.

B.2 RAW ANALYTICAL DATA

Constituent	Sample #	Date	Method	Result
Arsenic (EP Toxic)	50729E	10/26/89	ICP	<5.00E+02
Arsenic (EP Toxic)	50820E	11/30/89	ICP	<5.00E+02
Arsenic (EP Toxic)	50915E	1/31/90	ICP	<5.00E+02
Arsenic (EP Toxic)	51060E	3/16/90	ICP	<5.00E+02
Barium	50729	10/26/89	ICP	3.00E+01
Barium	50820	11/30/89	ICP	3.00E+01
Barium	50915	1/31/90	ICP	3.20E+01
Barium	51060	3/16/90	ICP	2.80E+01
Barium (EP Toxic)	50729E	10/26/89	ICP	<1.00E+03
Barium (EP Toxic)	50820E	11/30/89	ICP	<1.00E+03
Barium (EP Toxic)	50915E	1/31/90	ICP	<1.00E+03
Barium (EP Toxic)	51060E	3/16/90	ICP	<1.00E+03
Boron	50729	10/26/89	ICP	<1.00E+01
Boron	50820	11/30/89	ICP	1.20E+01
Boron	50915	1/31/90	ICP	1.90E+01
Boron	51060	3/16/90	ICP	2.30E+01
Cadmium (EP Toxic)	50729E	10/26/89	ICP	<1.00E+02
Cadmium (EP Toxic)	50820E	11/30/89	ICP	<1.00E+02
Cadmium (EP Toxic)	50915E	1/31/90	ICP	<1.00E+02
Cadmium (EP Toxic)	51060E	3/16/90	ICP	<1.00E+02
Calcium	50729	10/26/89	ICP	2.01E+04
Calcium	50820	11/30/89	ICP	1.95E+04
Calcium	50915	1/31/90	ICP	1.98E+04
Calcium	51060	3/16/90	ICP	1.76E+04
Chloride	50729	10/26/89	IC	4.30E+03
Chloride	50820	11/30/89	IC	2.90E+03
Chloride	50915	1/31/90	IC	5.50E+03
Chloride	51060	3/16/90	IC	2.30E+03
Chromium (EP Toxic)	50729E	10/26/89	ICP	<5.00E+02
Chromium (EP Toxic)	50820E	11/30/89	ICP	<5.00E+02
Chromium (EP Toxic)	50915E	1/31/90	ICP	<5.00E+02
Chromium (EP Toxic)	51060E	3/16/90	ICP	<5.00E+02
Copper	50729	10/26/89	ICP	<1.00E+01
Copper	50820	11/30/89	ICP	<1.00E+01
Copper	50915	1/31/90	ICP	1.30E+01
Copper	51060	3/16/90	ICP	<1.00E+01
Fluoride	50729	10/26/89	IC	<5.00E+02
Fluoride	50729	10/26/89	ISE	1.66E+02
Fluoride	50820	11/30/89	IC	<5.00E+02
Fluoride	50820	11/30/89	ISE	1.44E+02
Fluoride	50915	1/31/90	IC	1.00E+03
Fluoride	50915	1/31/90	ISE	1.13E+02
Fluoride	51060	3/16/90	IC	<5.00E+02
Fluoride	51060	3/16/90	ISE	1.32E+02
Lead (EP Toxic)	50729E	10/26/89	ICP	<5.00E+02
Lead (EP Toxic)	50820E	11/30/89	ICP	<5.00E+02

Constituent	Sample #	Date	Method	Result
Lead (EP Toxic)	50915E	1/31/90	ICP	<5.00E+02
Lead (EP Toxic)	51060E	3/16/90	ICP	<5.00E+02
Magnesium	50729	10/26/89	ICP	4.05E+03
Magnesium	50820	11/30/89	ICP	4.21E+03
Magnesium	50915	1/31/90	ICP	4.69E+03
Magnesium	51060	3/16/90	ICP	4.32E+03
Mercury (EP Toxic)	50729E	10/26/89	CVAA/M	<2.00E+01
Mercury (EP Toxic)	50820E	11/30/89	CVAA/M	<2.00E+01
Mercury (EP Toxic)	50915E	1/31/90	CVAA/M	<2.00E+01
Mercury (EP Toxic)	51060E	3/16/90	CVAA/M	<2.00E+01
Nitrate	50729	10/26/89	IC	<5.00E+02
Nitrate	50820	11/30/89	IC	5.00E+02
Nitrate	50915	1/31/90	IC	5.00E+02
Nitrate	51060	3/16/90	IC	<5.00E+02
Potassium	50729	10/26/89	ICP	7.49E+02
Potassium	50820	11/30/89	ICP	7.54E+02
Potassium	50915	1/31/90	ICP	7.27E+02
Potassium	51060	3/16/90	ICP	7.22E+02
Selenium (EP Toxic)	50729E	10/26/89	ICP	<5.00E+02
Selenium (EP Toxic)	50820E	11/30/89	ICP	<5.00E+02
Selenium (EP Toxic)	50915E	1/31/90	ICP	<5.00E+02
Selenium (EP Toxic)	51060E	3/16/90	ICP	<5.00E+02
Silicon	50729	10/26/89	ICP	2.10E+03
Silicon	50820	11/30/89	ICP	2.22E+03
Silicon	50915	1/31/90	ICP	2.32E+03
Silicon	51060	3/16/90	ICP	1.99E+03
Silver (EP Toxic)	50729E	10/26/89	ICP	<5.00E+02
Silver (EP Toxic)	50820E	11/30/89	ICP	<5.00E+02
Silver (EP Toxic)	50915E	1/31/90	ICP	<5.00E+02
Silver (EP Toxic)	51060E	3/16/90	ICP	<5.00E+02
Sodium	50729	10/26/89	ICP	2.29E+03
Sodium	50820	11/30/89	ICP	2.09E+03
Sodium	50915	1/31/90	ICP	2.25E+03
Sodium	51060	3/16/90	ICP	2.02E+03
Strontium	50729	10/26/89	ICP	9.90E+01
Strontium	50820	11/30/89	ICP	9.60E+01
Strontium	50915	1/31/90	ICP	9.50E+01
Strontium	51060	3/16/90	ICP	9.40E+01
Sulfate	50729	10/26/89	IC	1.39E+04
Sulfate	50820	11/30/89	IC	1.30E+04
Sulfate	50915	1/31/90	IC	1.47E+04
Sulfate	51060	3/16/90	IC	1.48E+04
Uranium	50729	10/26/89	FLUOR	4.04E-01
Uranium	50820	11/30/89	FLUOR	1.94E-01
Uranium	51060	3/16/90	FLUOR	2.98E-01
Zinc	50729	10/26/89	ICP	4.50E+01
Zinc	50820	11/30/89	ICP	3.10E+01

Constituent	Sample #	Date	Method	Result
Zinc	50915	1/31/90	ICP	3.00E+01
Zinc	51060	3/16/90	ICP	1.80E+01
Acetone	50729	10/26/89	VOA	<1.00E+01
Acetone	50729	10/26/89	ABN	<1.00E+01
Acetone	50729B	10/26/89	VOA	1.40E+01
Acetone	50729T	10/26/89	VOA	1.60E+01
Acetone	50820	11/30/89	VOA	<8.00E+00
Acetone	50820	11/30/89	ABN	<1.00E+01
Acetone	50915	1/31/90	VOA	<1.00E+01
Acetone	50915	1/31/90	ABN	<1.00E+01
Acetone	50915B	1/31/90	VOA	<1.00E+01
Acetone	50915T	1/31/90	VOA	<1.00E+01
Acetone	51060	3/16/90	VOA	<1.00E+01
Acetone	51060	3/16/90	ABN	<1.10E+01
Acetone	51060B	3/16/90	VOA	<1.00E+01
Acetone	51060T	3/16/90	VOA	<1.00E+01
Ammonia	50729	10/26/89	ISE	5.00E+01
Ammonia	50820	11/30/89	ISE	<5.00E+01
Ammonia	50915	1/31/90	ISE	<5.00E+01
Ammonia	51060	3/16/90	ISE	<5.00E+01
2-Butanone	50729	10/26/89	VOA	<1.00E+01
2-Butanone	50729B	10/26/89	VOA	<1.00E+01
2-Butanone	50729T	10/26/89	VOA	<1.00E+01
2-Butanone	50820	11/30/89	VOA	<6.00E+00
2-Butanone	50915	1/31/90	VOA	<1.00E+01
2-Butanone	50915B	1/31/90	VOA	1.00E+01
2-Butanone	50915T	1/31/90	VOA	<9.00E+00
2-Butanone	51060	3/16/90	VOA	<1.00E+01
2-Butanone	51060B	3/16/90	VOA	<1.00E+01
2-Butanone	51060T	3/16/90	VOA	<1.00E+01
Dichloromethane	50729	10/26/89	VOA	<5.00E+00
Dichloromethane	50729B	10/26/89	VOA	<4.00E+00
Dichloromethane	50729T	10/26/89	VOA	2.60E+01
Dichloromethane	50820	11/30/89	VOA	<5.00E+00
Dichloromethane	50915	1/31/90	VOA	<5.00E+00
Dichloromethane	50915B	1/31/90	VOA	<3.00E+00
Dichloromethane	50915T	1/31/90	VOA	<3.00E+00
Dichloromethane	51060	3/16/90	VOA	<5.00E+00
Dichloromethane	51060B	3/16/90	VOA	<5.00E+00
Dichloromethane	51060T	3/16/90	VOA	<3.00E+00
Halogenated hydrocarbons	50820	11/30/89	ABN	3.40E+01
Tetrahydrofuran	50729	10/26/89	VOA	<1.00E+01
Tetrahydrofuran	50729B	10/26/89	VOA	1.70E+01
Tetrahydrofuran	50729T	10/26/89	VOA	<1.00E+01
Tetrahydrofuran	50820	11/30/89	VOA	<1.00E+01
Tetrahydrofuran	50915	1/31/90	VOA	<1.00E+01
Tetrahydrofuran	50915B	1/31/90	VOA	1.10E+01

Constituent	Sample #	Date	Method	Result
Tetrahydrofuran	50915T	1/31/90	VOA	<9.00E+00
Tetrahydrofuran	51060	3/16/90	VOA	<1.00E+01
Tetrahydrofuran	51060B	3/16/90	VOA	<1.00E+01
Tetrahydrofuran	51060T	3/16/90	VOA	<7.00E+00
Trichloromethane	50729	10/26/89	VOA	1.50E+01
Trichloromethane	50729B	10/26/89	VOA	<5.00E+00
Trichloromethane	50729T	10/26/89	VOA	<5.00E+00
Trichloromethane	50820	11/30/89	VOA	2.70E+01
Trichloromethane	50915	1/31/90	VOA	1.50E+01
Trichloromethane	50915B	1/31/90	VOA	<5.00E+00
Trichloromethane	50915T	1/31/90	VOA	<5.00E+00
Trichloromethane	51060	3/16/90	VOA	1.30E+01
Trichloromethane	51060B	3/16/90	VOA	<5.00E+00
Trichloromethane	51060T	3/16/90	VOA	<4.00E+00
Unknown	50915	1/31/90	ABN	5.20E+01
Alkalinity (Method B)	50729	10/26/89	TITRA	5.30E+04
Alkalinity (Method B)	50820	11/30/89	TITRA	5.60E+04
Alkalinity (Method B)	50915	1/31/90	TITRA	6.10E+04
Alkalinity (Method B)	51060	3/16/90	TITRA	5.50E+04
Alpha Activity (pCi/L)	50729	10/26/89	Alpha	<3.39E-01
Alpha Activity (pCi/L)	50820	11/30/89	Alpha	1.05E+00
Alpha Activity (pCi/L)	51060	3/16/90	Alpha	<2.10E-01
Beta Activity (pCi/L)	50729	10/26/89	Beta	<3.19E-01
Beta Activity (pCi/L)	50820	11/30/89	Beta	2.36E+00
Beta Activity (pCi/L)	51060	3/16/90	Beta	<5.00E-01
Conductivity (µS)	50729	10/26/89	COND-Fld	1.60E+02
Conductivity (µS)	50820	11/30/89	COND-Fld	1.68E+02
Conductivity (µS)	50915	1/31/90	COND-Fld	1.58E+02
Conductivity (µS)	51060	3/16/90	COND-Fld	1.58E+02
Ignitability (°F)	50729E	10/26/89	IGNIT	2.12E+02
Ignitability (°F)	50820E	11/30/89	IGNIT	2.14E+02
Ignitability (°F)	50915E	1/31/90	IGNIT	2.10E+02
Ignitability (°F)	51060E	3/16/90	IGNIT	2.08E+02
pH (dimensionless)	50729	10/26/89	PH-Fld	7.90E+00
pH (dimensionless)	50820	11/30/89	PH-Fld	7.51E+00
pH (dimensionless)	50915	1/31/90	PH-Fld	8.00E+00
pH (dimensionless)	51060	3/16/90	PH-Fld	8.00E+00
Reactivity Cyanide (mg/kg)	50729E	10/26/89	DSPEC	<1.00E+02
Reactivity Cyanide (mg/kg)	50820E	11/30/89	DSPEC	<1.00E+02
Reactivity Cyanide (mg/kg)	50915E	1/31/90	DSPEC	<1.00E+02
Reactivity Cyanide (mg/kg)	51060E	3/16/90	DSPEC	<1.00E+02
Reactivity Sulfide (mg/kg)	50729E	10/26/89	DTITRA	<1.00E+02
Reactivity Sulfide (mg/kg)	50820E	11/30/89	DTITRA	<1.00E+02
Reactivity Sulfide (mg/kg)	50915E	1/31/90	DTITRA	<1.00E+02
Reactivity Sulfide (mg/kg)	51060E	3/16/90	DTITRA	<1.00E+02
TDS	50729	10/26/89	TDS	7.60E+04
TDS	50820	11/30/89	TDS	7.70E+04

Constituent	Sample #	Date	Method	Result
TDS	50915	1/31/90	TDS	8.40E+04
TDS	51060	3/16/90	TDS	6.70E+04
Temperature (°C)	50729	10/26/89	TEMP-Fld	2.45E+01
Temperature (°C)	50820	11/30/89	TEMP-Fld	1.72E+01
Temperature (°C)	50915	1/31/90	TEMP-Fld	2.37E+01
Temperature (°C)	51060	3/16/90	TEMP-Fld	1.92E+01
Total Carbon	50729	10/26/89	TC	1.49E+04
Total Carbon	50820	11/30/89	TC	1.41E+04
Total Carbon	50915	1/31/90	TC	1.26E+04
Total Carbon	51060	3/16/90	TC	1.44E+04
TOX (as Cl)	50729	10/26/89	LTOX	1.94E+02
TOX (as Cl)	50820	11/30/89	LTOX	1.65E+02
TOX (as Cl)	50915	1/31/90	LTOX	1.46E+02
TOX (as Cl)	51060	3/16/90	LTOX	1.18E+02
^{60}Co (pCi/L)	50729	10/26/89	GEA	6.14E-01
^{60}Co (pCi/L)	51060	3/16/90	GEA	1.03E+00
^{90}Sr (pCi/L)	50729	10/26/89	Beta	<1.59E-01
^{90}Sr (pCi/L)	50820	11/30/89	Beta	1.99E-01
^{90}Sr (pCi/L)	51060	3/16/90	Beta	<2.93E-01
^{234}U (pCi/L)	50729	10/26/89	AEA	7.98E-02
^{234}U (pCi/L)	50820	11/30/89	AEA	1.41E-01
^{234}U (pCi/L)	51060	3/16/90	AEA	1.89E-01
^{238}U (pCi/L)	50729	10/26/89	AEA	9.78E-02
^{238}U (pCi/L)	50820	11/30/89	AEA	1.09E-01
^{238}U (pCi/L)	51060	3/16/90	AEA	1.17E-01

Sample# is the number of the sample. See chapter three for corresponding chain-of-custody number. Date is the sampling date. Results are in ppb (parts per billion) unless otherwise indicated. The following table lists the methods that are coded in the method column.

Code	Analytical Method	Reference
ABN	Semivolatile Organics (GC/MS)	USEPA-8270
AEA	^{241}Am	UST-20Am01
AEA	Curium Isotopes	UST-20Am/Cm01
AEA	Plutonium Isotopes	UST-20Pu01
AEA	Uranium Isotopes	UST-20U01
ALPHA	Alpha Counting	EPA-680/4-75/1
ALPHA-Ra	Total Radium Alpha Counting	ASTM-D2460
BETA	Beta Counting	EPA-680/4-75/1
BETA	^{90}Sr	UST-20Sr02
COLIF	Coliform Bacteria	USEPA-9131
COLIFMF	Coliform Bacteria (Membrane Filter)	USEPA-9132
COND-Fld	Conductivity-Field	ASTM-D1125A
COND-Lab	Conductivity-Laboratory	ASTM-D1125A
CVAA	Mercury	USEPA-7470

Constituent	Sample #	Date	Method	Result

Code	Analytical Method	Reference
CVAA/M	Mercury-Mixed Matrix	USEPA-7470
DIGC	Direct Aqueous Injection (GC)	UST-70DIGC
DIMS	Direct Aqueous Injection (GC/MS)	"USEPA-8240"
DSPEC	Reactive Cyanide (Distillation, Spectroscopy)	USEPA-CHAPTER 7
DTITRA	Reactive Sulfide (Distillation, Titration)	USEPA-CHAPTER 7
FLUOR	Uranium (Fluorometry)	ASTM-D2907-83
GEA	Gamma Energy Analysis Spectroscopy	ASTM-D3649-85
GFAA	Arsenic (AA, Furnace Technique)	USEPA-7060
GFAA	Lead (AA, Furnace Technique)	USEPA-7421
GFAA	Selenium (AA, Furnace Technique)	USEPA-7740
GFAA	Thallium (AA, Furnace Technique)	USEPA-7841
IC	Ion Chromatography	EPA-600/4-84-01
ICP	Atomic Emission Spectroscopy (ICP)	USEPA-6010
ICP/M	Atomic Emission Spectroscopy (ICP)-Mixed Matrix	USEPA-6010
IGNIT	Pensky-Martens Closed-Cup Ignitability	USEPA-1010
ISE	Fluoride-Low Detection Limit	ASTM-D1179-80-B
ISE	Ammonium Ion	ASTM-D1426-D
LALPHA	Alpha Activity-Low Detection Limit	EPA-680/4-75/1
LEPD	^{129}I	UST-20I02
LSC	^{14}C	UST-20C01
LSC	Tritium	UST-20H03
LTOX	Total Organic Halides-Low Detection Limit	USEPA-9020
PH-Fld	pH-Field	USEPA-9040
PH-Lab	pH-Laboratory	USEPA-9040
SPEC	Total and Amenable Cyanide (Spectroscopy)	USEPA-9010
SPEC	Hydrazine-Low Detection Limit (Spectroscopy)	ASTM-D1385
SSOLID	Suspended Solids	SM-208D
TC	Total Carbon	USEPA-9060
TDS	Total Dissolved Solids	SM-208B
TEMP-Fld	Temperature-Field	Local
TITRA	Alkalinity-Method B (Titration)	ASTM-D1067B
TITRA	Sulfides (Titration)	USEPA-9030
TOC	Total Organic Carbon	USEPA-9060
TOX	Total Organic Halides	USEPA-9020
VOA	Volatile Organics (GC/MS)	USEPA-8240

Analytical Method Acronyms:
- AA = atomic absorption spectroscopy.
- GC = gas chromatography.
- MS = mass spectrometry.
- ICP = inductively-coupled plasma spectroscopy.

Constituent	Sample #	Date	Method	Result

References:

ASTM--"1986 Annual Book of ASTM Standards," American Society for Testing and Materials, Philadelphia, Pennsylvania.

EPA--Various methods of the U.S. Environmental Protection Agency, Washington, D.C.

UST--Methods of the United States Testing Company, Incorporated, Richland, Washington.

SM--"Standard Methods for the Examination of Water and Wastewater," 16th ed., American Public Health Association, American Water Works Association and Water Pollution Control Federation, Washington, D.C.

USEPA--"Test Methods for Evaluating Solid Waste Physical/Chemical Methods," 3rd ed., SW-846, U.S. Environmental Protection Agency, Washington, D.C.

B.3 INORGANIC CHEMISTRY DATA

Constituent	ppb	Ion	Eq/g	Normalized
Charge normalization:				
Barium	3.13E+01	Ba+2	4.56E-10	
Boron	2.10E+01	B4O7-2	9.69E-10	2.27E-09
Calcium	2.02E+04	Ca+2	1.01E-06	
Chloride	4.93E+03	Cl-1	1.39E-07	3.26E-07
Copper	1.20E+01	Cu+2	3.77E-10	
Fluoride	4.18E+02	F-1	2.20E-08	5.15E-08
Magnesium	4.54E+03	Mg+2	3.74E-07	
Nitrate	5.00E+02	NO3-1	8.06E-09	1.89E-08
Potassium	7.51E+02	K+1	1.92E-08	
Silicon	2.27E+03	SiO3-2	1.62E-07	3.80E-07
Sodium	2.27E+03	Na+1	9.86E-08	
Strontium	9.78E+01	Sr+2	2.23E-09	
Sulfate	1.48E+04	SO4-2	3.08E-07	7.22E-07
Uranium	4.13E-01	UO2+2	3.47E-12	
Zinc	4.00E+01	Zn+2	1.23E-09	
Hydrogen Ion (from pH 8.0)		H+	(9.05E-12)	
Hydroxide Ion (from pH)		OH-	(1.11E-09)	
Cation total			1.50E-06	
Anion total			6.41E-07	
Anion normalization factor:	2.344			

Substance formation:

Substance	%	Cation out	Anion out
Copper(II) chloride	2.53E-06	0.00E+00	3.25E-07
Uranyl nitrate	6.84E-08	0.00E+00	1.89E-08
Potassium fluoride	1.12E-04	0.00E+00	3.23E-08
Barium chloride	4.75E-06	0.00E+00	3.25E-07
Sodium fluoride	1.36E-04	6.63E-08	0.00E+00
Zinc nitrate	1.16E-05	0.00E+00	1.77E-08
Magnesium chloride	1.55E-03	4.88E-08	0.00E+00
Magnesium nitrate	1.39E-04	3.11E-08	0.00E+00
Calcium tetraborate	2.22E-05	1.00E-06	0.00E+00
Magnesium sulfate	1.87E-04	0.00E+00	6.91E-07
Sodium metasilicate	4.05E-04	0.00E+00	3.13E-07
Strontium sulfate	2.05E-05	0.00E+00	6.88E-07
Calcium sulfate	4.69E-03	3.16E-07	0.00E+00

Statistics based on a single datum are noted by an asterisk (*). With the exception of hydrogen ion and hydroxide, others report the upper limit of the one-tailed 90% confidence interval. Hydrogen ion is based on the lower limit of the one-tailed 90% confidence interval for pH sets with mean values below 7.25 and on the upper limit of the one-tailed 90% confidence interval for pH data sets with mean values of 7.25 or higher. The hydroxide magnitude is equal to 1.00E-20 (Eq/g)**2 divided by the hydrogen ion value (in Eq/g).

Constituent	ppb	Ion	Eq/g	Normalized

Ion concentrations in equivalents per gram (Eq/g) are based on the statistic. Conversions include scale (ppb to g/g), molecular weight (constituent form to ionic form), and equivalents (charges per ion). The column headed "Normalized" shows normalized concentrations (also in Eq/g) calculated by increasing concentrations of cations, excluding Hydrogen ion, or anions, excluding hydroxide, by the normalization factor. The normalization factor is the larger of the cation total, including Hydrogen ion, or anion total, including hydroxide, divided by the smaller total.

Substance names may include MB (monobasic), DB (dibasic), TB (tribasic) to identify the equivalents of hydrogen ion that have been neutralized from polycrotic weak acids to form their conjugate bases.

Substances are formulated in the order listed. The column headed "%" is the percent of the substance in the waste (gms/100gms). Substances formulated with oxygen are based on the residual concentration of the counterion. Other substance concentrations are based on the limiting residual concentration of the cation or anion. The columns headed "Cation Out" and "Anion Out" indicate the residual concentrations (in Eq/g) of each ion after a substance concentration has been calculated.

This page intentionally left blank.

9112201/0327

APPENDIX C

242-S SAMPLE DATA

(COMPILATION OF EXISTING DATA)

This page intentionally left blank.

Constituent	Sample #	Date	Method	Result
Arsenic (EP Toxic)	50729E	10/26/89	ICP	<5.00E+02
Arsenic (EP Toxic)	50820E	11/30/89	ICP	<5.00E+02
Arsenic (EP Toxic)	50915E	1/31/90	ICP	<5.00E+02
Arsenic (EP Toxic)	51060E	3/16/90	ICP	<5.00E+02
Barium	50163	10/24/86	ICP	2.40E+01
Barium	50198	12/10/86	ICP	2.60E+01
Barium	50271	3/30/87	ICP	2.50E+01
Barium	50303	5/22/87	ICP	2.90E+01
Barium	50729	10/26/89	ICP	3.00E+01
Barium	50820	11/30/89	ICP	3.00E+01
Barium	50915	1/31/90	ICP	3.20E+01
Barium	51060	3/16/90	ICP	2.80E+01
Barium (EP Toxic)	50729E	10/26/89	ICP	<1.00E+03
Barium (EP Toxic)	50820E	11/30/89	ICP	<1.00E+03
Barium (EP Toxic)	50915E	1/31/90	ICP	<1.00E+03
Barium (EP Toxic)	51060E	3/16/90	ICP	<1.00E+03
Boron	50729	10/26/89	ICP	<1.00E+01
Boron	50820	11/30/89	ICP	1.20E+01
Boron	50915	1/31/90	ICP	1.90E+01
Boron	51060	3/16/90	ICP	2.30E+01
Cadmium (EP Toxic)	50729E	10/26/89	ICP	<1.00E+02
Cadmium (EP Toxic)	50820E	11/30/89	ICP	<1.00E+02
Cadmium (EP Toxic)	50915E	1/31/90	ICP	<1.00E+02
Cadmium (EP Toxic)	51060E	3/16/90	ICP	<1.00E+02
Calcium	50163	10/24/86	ICP	1.90E+04
Calcium	50198	12/10/86	ICP	1.97E+04
Calcium	50271	3/30/87	ICP	2.06E+04
Calcium	50303	5/22/87	ICP	1.74E+04
Calcium	50729	10/26/89	ICP	2.01E+04
Calcium	50820	11/30/89	ICP	1.95E+04
Calcium	50915	1/31/90	ICP	1.98E+04
Calcium	51060	3/16/90	ICP	1.76E+04
Chloride	50163	10/24/86	IC	3.35E+03
Chloride	50198	12/10/86	IC	3.48E+03
Chloride	50271	3/30/87	IC	3.55E+03
Chloride	50303	5/22/87	IC	2.88E+03
Chloride	50729	10/26/89	IC	4.30E+03
Chloride	50820	11/30/89	IC	2.90E+03
Chloride	50915	1/31/90	IC	5.50E+03
Chloride	51060	3/16/90	IC	2.30E+03
Chromium (EP Toxic)	50729E	10/26/89	ICP	<5.00E+02
Chromium (EP Toxic)	50820E	11/30/89	ICP	<5.00E+02
Chromium (EP Toxic)	50915E	1/31/90	ICP	<5.00E+02
Chromium (EP Toxic)	51060E	3/16/90	ICP	<5.00E+02
Copper	50163	10/24/86	ICP	<1.00E+01
Copper	50198	12/10/86	ICP	<1.00E+01
Copper	50271	3/30/87	ICP	<1.00E+01

Constituent	Sample #	Date	Method	Result
Copper	50303	5/22/87	ICP	<1.00E+01
Copper	50729	10/26/89	ICP	<1.00E+01
Copper	50820	11/30/89	ICP	<1.00E+01
Copper	50915	1/31/90	ICP	1.30E+01
Copper	51060	3/16/90	ICP	<1.00E+01
Fluoride	50163	10/24/86	IC	<5.00E+02
Fluoride	50198	12/10/86	IC	<5.00E+02
Fluoride	50271	3/30/87	IC	<5.00E+02
Fluoride	50303	5/22/87	IC	<5.00E+02
Fluoride	50729	10/26/89	IC	<5.00E+02
Fluoride	50729	10/26/89	ISE	1.66E+02
Fluoride	50820	11/30/89	IC	<5.00E+02
Fluoride	50820	11/30/89	ISE	1.44E+02
Fluoride	50915	1/31/90	IC	1.00E+03
Fluoride	50915	1/31/90	ISE	1.13E+02
Fluoride	51060	3/16/90	IC	<5.00E+02
Fluoride	51060	3/16/90	ISE	1.32E+02
Iron	50163	10/24/86	ICP	<5.00E+01
Iron	50198	12/10/86	ICP	7.10E+01
Iron	50271	3/30/87	ICP	<5.00E+01
Iron	50303	5/22/87	ICP	<5.00E+01
Iron	50729	10/26/89	ICP	<3.00E+01
Iron	50820	11/30/89	ICP	<3.00E+01
Iron	50915	1/31/90	ICP	<3.00E+01
Iron	51060	3/16/90	ICP	<3.00E+01
Lead	50163	10/24/86	GFAA	7.10E+00
Lead	50198	12/10/86	GFAA	<5.00E+00
Lead	50271	3/30/87	GFAA	<5.00E+00
Lead	50303	5/22/87	GFAA	<5.00E+00
Lead	50729	10/26/89	GFAA	<5.00E+00
Lead	50820	11/30/89	GFAA	<5.00E+00
Lead	50915	1/31/90	GFAA	<5.00E+00
Lead	51060	3/16/90	GFAA	<5.00E+00
Lead (EP Toxic)	50729E	10/26/89	ICP	<5.00E+02
Lead (EP Toxic)	50820E	11/30/89	ICP	<5.00E+02
Lead (EP Toxic)	50915E	1/31/90	ICP	<5.00E+02
Lead (EP Toxic)	51060E	3/16/90	ICP	<5.00E+02
Magnesium	50163	10/24/86	ICP	3.92E+03
Magnesium	50198	12/10/86	ICP	4.40E+03
Magnesium	50271	3/30/87	ICP	4.65E+03
Magnesium	50303	5/22/87	ICP	3.78E+03
Magnesium	50729	10/26/89	ICP	4.05E+03
Magnesium	50820	11/30/89	ICP	4.21E+03
Magnesium	50915	1/31/90	ICP	4.69E+03
Magnesium	51060	3/16/90	ICP	4.32E+03
Manganese	50163	10/24/86	ICP	2.20E+01
Manganese	50198	12/10/86	ICP	1.10E+01

Constituent	Sample #	Date	Method	Result
Manganese	50271	3/30/87	ICP	<5.00E+00
Manganese	50303	5/22/87	ICP	<5.00E+00
Manganese	50729	10/26/89	ICP	<5.00E+00
Manganese	50820	11/30/89	ICP	<5.00E+00
Manganese	50915	1/31/90	ICP	<5.00E+00
Manganese	51060	3/16/90	ICP	<5.00E+00
Mercury (EP Toxic)	50729E	10/26/89	CVAA/M	<2.00E+01
Mercury (EP Toxic)	50820E	11/30/89	CVAA/M	<2.00E+01
Mercury (EP Toxic)	50915E	1/31/90	CVAA/M	<2.00E+01
Mercury (EP Toxic)	51060E	3/16/90	CVAA/M	<2.00E+01
Nitrate	50163	10/24/86	IC	<5.00E+02
Nitrate	50198	12/10/86	IC	6.04E+02
Nitrate	50271	3/30/87	IC	<5.00E+02
Nitrate	50303	5/22/87	IC	<5.00E+02
Nitrate	50729	10/26/89	IC	<5.00E+02
Nitrate	50820	11/30/89	IC	5.00E+02
Nitrate	50915	1/31/90	IC	5.00E+02
Nitrate	51060	3/16/90	IC	<5.00E+02
Potassium	50163	10/24/86	ICP	8.74E+02
Potassium	50198	12/10/86	ICP	9.60E+02
Potassium	50271	3/30/87	ICP	8.68E+02
Potassium	50303	5/22/87	ICP	8.34E+02
Potassium	50729	10/26/89	ICP	7.49E+02
Potassium	50820	11/30/89	ICP	7.54E+02
Potassium	50915	1/31/90	ICP	7.27E+02
Potassium	51060	3/16/90	ICP	7.22E+02
Selenium (EP Toxic)	50729E	10/26/89	ICP	<5.00E+02
Selenium (EP Toxic)	50820E	11/30/89	ICP	<5.00E+02
Selenium (EP Toxic)	50915E	1/31/90	ICP	<5.00E+02
Selenium (EP Toxic)	51060E	3/16/90	ICP	<5.00E+02
Silicon	50729	10/26/89	ICP	2.10E+03
Silicon	50820	11/30/89	ICP	2.22E+03
Silicon	50915	1/31/90	ICP	2.32E+03
Silicon	51060	3/16/90	ICP	1.99E+03
Silver (EP Toxic)	50729E	10/26/89	ICP	<5.00E+02
Silver (EP Toxic)	50820E	11/30/89	ICP	<5.00E+02
Silver (EP Toxic)	50915E	1/31/90	ICP	<5.00E+02
Silver (EP Toxic)	51060E	3/16/90	ICP	<5.00E+02
Sodium	50163	10/24/86	ICP	1.96E+03
Sodium	50198	12/10/86	ICP	2.46E+03
Sodium	50271	3/30/87	ICP	2.09E+03
Sodium	50303	5/22/87	ICP	2.27E+03
Sodium	50729	10/26/89	ICP	2.29E+03
Sodium	50820	11/30/89	ICP	2.09E+03
Sodium	50915	1/31/90	ICP	2.25E+03
Sodium	51060	3/16/90	ICP	2.02E+03

Constituent	Sample #	Date	Method	Result
Strontium	50163	10/24/86	ICP	<3.00E+02
Strontium	50198	12/10/86	ICP	<3.00E+02
Strontium	50271	3/30/87	ICP	<3.00E+02
Strontium	50303	5/22/87	ICP	<3.00E+02
Strontium	50729	10/26/89	ICP	9.90E+01
Strontium	50820	11/30/89	ICP	9.60E+01
Strontium	50915	1/31/90	ICP	9.50E+01
Strontium	51060	3/16/90	ICP	9.40E+01
Sulfate	50163	10/24/86	IC	1.20E+04
Sulfate	50198	12/10/86	IC	1.44E+04
Sulfate	50271	3/30/87	IC	1.70E+04
Sulfate	50303	5/22/87	IC	1.75E+04
Sulfate	50729	10/26/89	IC	1.39E+04
Sulfate	50820	11/30/89	IC	1.30E+04
Sulfate	50915	1/31/90	IC	1.47E+04
Sulfate	51060	3/16/90	IC	1.48E+04
Sulfide	50163	10/24/86	TITRA	<1.00E+03
Sulfide	50198	12/10/86	TITRA	<1.00E+03
Sulfide	50271	3/30/87	TITRA	1.04E+03
Sulfide	50303	5/22/87	TITRA	<1.00E+03
Sulfide	50729	10/26/89	TITRA	<1.00E+03
Sulfide	50820	11/30/89	TITRA	<1.00E+03
Sulfide	50915	1/31/90	TITRA	<1.00E+03
Sulfide	51060	3/16/90	TITRA	<1.00E+03
Uranium	50163	10/24/86	FLUOR	5.03E-01
Uranium	50198	12/10/86	FLUOR	5.19E-01
Uranium	50271	3/30/87	FLUOR	1.57E-01
Uranium	50303	5/22/87	FLUOR	2.62E-01
Uranium	50729	10/26/89	FLUOR	4.04E-01
Uranium	50820	11/30/89	FLUOR	1.94E-01
Uranium	51060	3/16/90	FLUOR	2.98E-01
Zinc	50163	10/24/86	ICP	6.70E+01
Zinc	50198	12/10/86	ICP	8.20E+01
Zinc	50271	3/30/87	ICP	6.10E+01
Zinc	50303	5/22/87	ICP	9.70E+01
Zinc	50729	10/26/89	ICP	4.50E+01
Zinc	50820	11/30/89	ICP	3.10E+01
Zinc	50915	1/31/90	ICP	3.00E+01
Zinc	51060	3/16/90	ICP	1.80E+01
Acetone	50729	10/26/89	VOA	<1.00E+01
Acetone	50729	10/26/89	ABN	<1.00E+01
Acetone	50729B	10/26/89	VOA	1.40E+01
Acetone	50729T	10/26/89	VOA	1.60E+01
Acetone	50820	11/30/89	VOA	<8.00E+00
Acetone	50820	11/30/89	ABN	<1.00E+01
Acetone	50915	1/31/90	VOA	<1.00E+01
Acetone	50915	1/31/90	ABN	<1.00E+01

Constituent	Sample #	Date	Method	Result
Acetone	50915B	1/31/90	VOA	<1.00E+01
Acetone	50915T	1/31/90	VOA	<1.00E+01
Acetone	51060	3/16/90	VOA	<1.00E+01
Acetone	51060	3/16/90	ABN	<1.10E+01
Acetone	51060B	3/16/90	VOA	<1.00E+01
Acetone	51060T	3/16/90	VOA	<1.00E+01
Ammonia	50163	10/24/86	ISE	5.40E+01
Ammonia	50198	12/10/86	ISE	<5.00E+01
Ammonia	50271	3/30/87	ISE	<5.00E+01
Ammonia	50303	5/22/87	ISE	<5.00E+01
Ammonia	50729	10/26/89	ISE	5.00E+01
Ammonia	50820	11/30/89	ISE	<5.00E+01
Ammonia	50915	1/31/90	ISE	<5.00E+01
Ammonia	51060	3/16/90	ISE	<5.00E+01
2-Butanone	50163	10/24/86	VOA	<1.00E+01
2-Butanone	50163B	10/24/86	VOA	<1.00E+01
2-Butanone	50198	12/10/86	VOA	<1.00E+01
2-Butanone	50198B	12/10/86	VOA	<1.00E+01
2-Butanone	50271	3/30/87	VOA	<1.00E+01
2-Butanone	50271B	3/30/87	VOA	<1.00E+01
2-Butanone	50303	5/22/87	VOA	<1.00E+01
2-Butanone	50303B	5/22/87	VOA	<1.00E+01
2-Butanone	50729	10/26/89	VOA	<1.00E+01
2-Butanone	50729B	10/26/89	VOA	<1.00E+01
2-Butanone	50729T	10/26/89	VOA	<1.00E+01
2-Butanone	50820	11/30/89	VOA	<6.00E+00
2-Butanone	50915	1/31/90	VOA	<1.00E+01
2-Butanone	50915B	1/31/90	VOA	1.00E+01
2-Butanone	50915T	1/31/90	VOA	<9.00E+00
2-Butanone	51060	3/16/90	VOA	<1.00E+01
2-Butanone	51060B	3/16/90	VOA	<1.00E+01
2-Butanone	51060T	3/16/90	VOA	<1.00E+01
Dichloromethane	50163	10/24/86	VOA	<1.00E+01
Dichloromethane	50163B	10/24/86	VOA	1.20E+02
Dichloromethane	50198	12/10/86	VOA	<1.00E+01
Dichloromethane	50198B	12/10/86	VOA	5.50E+01
Dichloromethane	50271	3/30/87	VOA	<1.00E+01
Dichloromethane	50271B	3/30/87	VOA	4.70E+01
Dichloromethane	50303	5/22/87	VOA	<1.00E+01
Dichloromethane	50303B	5/22/87	VOA	3.10E+01
Dichloromethane	50729	10/26/89	VOA	<5.00E+00
Dichloromethane	50729B	10/26/89	VOA	<4.00E+00
Dichloromethane	50729T	10/26/89	VOA	2.60E+01
Dichloromethane	50820	11/30/89	VOA	<5.00E+00
Dichloromethane	50915	1/31/90	VOA	<5.00E+00
Dichloromethane	50915B	1/31/90	VOA	<3.00E+00
Dichloromethane	50915T	1/31/90	VOA	<3.00E+00

Constituent	Sample #	Date	Method	Result
Dichloromethane	51060	3/16/90	VOA	<5.00E+00
Dichloromethane	51060B	3/16/90	VOA	<5.00E+00
Dichloromethane	51060T	3/16/90	VOA	<3.00E+00
Halogenated hydrocarbons	50820	11/30/89	ABN	3.40E+01
Tetrahydrofuran	50729	10/26/89	VOA	<1.00E+01
Tetrahydrofuran	50729B	10/26/89	VOA	1.70E+01
Tetrahydrofuran	50729T	10/26/89	VOA	<1.00E+01
Tetrahydrofuran	50820	11/30/89	VOA	<1.00E+01
Tetrahydrofuran	50915	1/31/90	VOA	<1.00E+01
Tetrahydrofuran	50915B	1/31/90	VOA	1.10E+01
Tetrahydrofuran	50915T	1/31/90	VOA	<9.00E+00
Tetrahydrofuran	51060	3/16/90	VOA	<1.00E+01
Tetrahydrofuran	51060B	3/16/90	VOA	<1.00E+01
Tetrahydrofuran	51060T	3/16/90	VOA	<7.00E+00
Trichloromethane	50163	10/24/86	VOA	2.30E+01
Trichloromethane	50163B	10/24/86	VOA	<1.00E+01
Trichloromethane	50198	12/10/86	VOA	2.10E+01
Trichloromethane	50198B	12/10/86	VOA	<1.00E+01
Trichloromethane	50271	3/30/87	VOA	1.60E+01
Trichloromethane	50271B	3/30/87	VOA	<1.00E+01
Trichloromethane	50303	5/22/87	VOA	2.30E+01
Trichloromethane	50303B	5/22/87	VOA	<1.00E+01
Trichloromethane	50729	10/26/89	VOA	1.50E+01
Trichloromethane	50729B	10/26/89	VOA	<5.00E+00
Trichloromethane	50729T	10/26/89	VOA	<5.00E+00
Trichloromethane	50820	11/30/89	VOA	2.70E+01
Trichloromethane	50915	1/31/90	VOA	1.50E+01
Trichloromethane	50915B	1/31/90	VOA	<5.00E+00
Trichloromethane	50915T	1/31/90	VOA	<5.00E+00
Trichloromethane	51060	3/16/90	VOA	1.30E+01
Trichloromethane	51060B	3/16/90	VOA	<5.00E+00
Trichloromethane	51060T	3/16/90	VOA	<4.00E+00
Unknown	50915	1/31/90	ABN	5.20E+01
Unknown aromatic HC	50271	3/30/87	ABN	1.90E+01
Alkalinity (Method B)	50729	10/26/89	TITRA	5.30E+04
Alkalinity (Method B)	50820	11/30/89	TITRA	5.60E+04
Alkalinity (Method B)	50915	1/31/90	TITRA	6.10E+04
Alkalinity (Method B)	51060	3/16/90	TITRA	5.50E+04
Alpha Activity (pCi/L)	50163	10/24/86	Alpha	1.29E+00
Alpha Activity (pCi/L)	50198	12/10/86	Alpha	7.88E-01
Alpha Activity (pCi/L)	50303	5/22/87	Alpha	3.54E-01
Alpha Activity (pCi/L)	50729	10/26/89	Alpha	<3.39E-01
Alpha Activity (pCi/L)	50820	11/30/89	Alpha	1.05E+00
Alpha Activity (pCi/L)	51060	3/16/90	Alpha	<2.10E-01
Beta Activity (pCi/L)	50163	10/24/86	Beta	7.80E+00
Beta Activity (pCi/L)	50198	12/10/86	Beta	7.44E+00
Beta Activity (pCi/L)	50271	3/30/87	Beta	1.88E+00

Constituent	Sample #	Date	Method	Result
Beta Activity (pCi/L)	50303	5/22/87	Beta	3.65E+00
Beta Activity (pCi/L)	50729	10/26/89	Beta	<3.19E-01
Beta Activity (pCi/L)	50820	11/30/89	Beta	2.36E+00
Beta Activity (pCi/L)	51060	3/16/90	Beta	<5.00E-01
Conductivity (µS)	50163	10/24/86	COND-Fld	1.41E+02
Conductivity (µS)	50198	12/10/86	COND-Fld	1.70E+02
Conductivity (µS)	50271	3/30/87	COND-Fld	1.54E+02
Conductivity (µS)	50303	5/22/87	COND-Fld	1.51E+02
Conductivity (µS)	50729	10/26/89	COND-Fld	1.60E+02
Conductivity (µS)	50820	11/30/89	COND-Fld	1.68E+02
Conductivity (µS)	50915	1/31/90	COND-Fld	1.58E+02
Conductivity (µS)	51060	3/16/90	COND-Fld	1.58E+02
Ignitability (°F)	50729E	10/26/89	IGNIT	2.12E+02
Ignitability (°F)	50820E	11/30/89	IGNIT	2.14E+02
Ignitability (°F)	50915E	1/31/90	IGNIT	2.10E+02
Ignitability (°F)	51060E	3/16/90	IGNIT	2.08E+02
pH (dimensionless)	50163	10/24/86	PH-Fld	6.09E+00
pH (dimensionless)	50198	12/10/86	PH-Fld	5.15E+00
pH (dimensionless)	50271	3/30/87	PH-Fld	6.06E+00
pH (dimensionless)	50303	5/22/87	PH-Fld	5.60E+00
pH (dimensionless)	50729	10/26/89	PH-Fld	7.90E+00
pH (dimensionless)	50820	11/30/89	PH-Fld	7.51E+00
pH (dimensionless)	50915	1/31/90	PH-Fld	8.00E+00
pH (dimensionless)	51060	3/16/90	PH-Fld	8.00E+00
Reactivity Cyanide (mg/kg)	50729E	10/26/89	DSPEC	<1.00E+02
Reactivity Cyanide (mg/kg)	50820E	11/30/89	DSPEC	<1.00E+02
Reactivity Cyanide (mg/kg)	50915E	1/31/90	DSPEC	<1.00E+02
Reactivity Cyanide (mg/kg)	51060E	3/16/90	DSPEC	<1.00E+02
Reactivity Sulfide (mg/kg)	50729E	10/26/89	DTITRA	<1.00E+02
Reactivity Sulfide (mg/kg)	50820E	11/30/89	DTITRA	<1.00E+02
Reactivity Sulfide (mg/kg)	50915E	1/31/90	DTITRA	<1.00E+02
Reactivity Sulfide (mg/kg)	51060E	3/16/90	DTITRA	<1.00E+02
TDS	50729	10/26/89	TDS	7.60E+04
TDS	50820	11/30/89	TDS	7.70E+04
TDS	50915	1/31/90	TDS	8.40E+04
TDS	51060	3/16/90	TDS	6.70E+04
Temperature (°C)	50163	10/24/86	TEMP-Fld	3.08E+01
Temperature (°C)	50198	12/10/86	TEMP-Fld	2.42E+01
Temperature (°C)	50271	3/30/87	TEMP-Fld	2.60E+01
Temperature (°C)	50303	5/22/87	TEMP-Fld	2.80E+01
Temperature (°C)	50729	10/26/89	TEMP-Fld	2.45E+01
Temperature (°C)	50820	11/30/89	TEMP-Fld	1.72E+01
Temperature (°C)	50915	1/31/90	TEMP-Fld	2.37E+01
Temperature (°C)	51060	3/16/90	TEMP-Fld	1.92E+01
TOC	50163	10/24/86	TOC	<8.91E+02
TOC	50198	12/10/86	TOC	1.04E+03
TOC	50271	3/30/87	TOC	<9.70E+02

Constituent	Sample #	Date	Method	Result
TOC	50303	5/22/87	TOC	1.47E+03
TOC	50729	10/26/89	TOC	<1.30E+03
TOC	50820	11/30/89	TOC	<1.00E+03
TOC	50915	1/31/90	TOC	<1.00E+03
TOC	51060	3/16/90	TOC	<9.00E+02
Total Carbon	50729	10/26/89	TC	1.49E+04
Total Carbon	50820	11/30/89	TC	1.41E+04
Total Carbon	50915	1/31/90	TC	1.26E+04
Total Carbon	51060	3/16/90	TC	1.44E+04
TOX (as Cl)	50163	10/24/86	TOX	1.25E+02
TOX (as Cl)	50198	12/10/86	LTOX	1.28E+02
TOX (as Cl)	50271	3/30/87	LTOX	1.00E+02
TOX (as Cl)	50303	5/22/87	LTOX	1.65E+02
TOX (as Cl)	50729	10/26/89	LTOX	1.94E+02
TOX (as Cl)	50820	11/30/89	LTOX	1.65E+02
TOX (as Cl)	50915	1/31/90	LTOX	1.46E+02
TOX (as Cl)	51060	3/16/90	LTOX	1.18E+02
^{60}Co (pCi/L)	50729	10/26/89	GEA	6.14E-01
^{60}Co (pCi/L)	51060	3/16/90	GEA	1.03E+00
^{90}Sr (pCi/L)	50729	10/26/89	Beta	<1.59E-01
^{90}Sr (pCi/L)	50820	11/30/89	Beta	1.99E-01
^{90}Sr (pCi/L)	51060	3/16/90	Beta	<2.93E-01
^{234}U (pCi/L)	50729	10/26/89	AEA	7.98E-02
^{234}U (pCi/L)	50820	11/30/89	AEA	1.41E-01
^{234}U (pCi/L)	51060	3/16/90	AEA	1.89E-01
^{238}U (pCi/L)	50729	10/26/89	AEA	9.78E-02
^{238}U (pCi/L)	50820	11/30/89	AEA	1.09E-01
^{238}U (pCi/L)	51060	3/16/90	AEA	1.17E-01

Sample# is the number of the sample. See chapter three for corresponding chain-of-custody number. Date is the sampling date. Results are in ppb (parts per billion) unless otherwise indicated. The following table lists the methods that are coded in the method column.

Code	Analytical Method	Reference
ABN	Semivolatile Organics (GC/MS)	USEPA-8270
AEA	^{241}Am	UST-20Am01
AEA	Curium Isotopes	UST-20Am/Cm01
AEA	Plutonium Isotopes	UST-20Pu01
AEA	Uranium Isotopes	UST-20U01
ALPHA	Alpha Counting	EPA-680/4-75/1
ALPHA-Ra	Total Radium Alpha Counting	ASTM-D2460
BETA	Beta Counting	EPA-680/4-75/1
BETA	^{90}Sr	UST-20Sr02

Constituent	Sample #	Date	Method	Result

Code	Analytical Method	Reference
COLIF	Coliform Bacteria	USEPA-9131
COLIFMF	Coliform Bacteria (Membrane Filter)	USEPA-9132
COND-Fld	Conductivity-Field	ASTM-D1125A
COND-Lab	Conductivity-Laboratory	ASTM-D1125A
CVAA	Mercury	USEPA-7470
CVAA/M	Mercury-Mixed Matrix	USEPA-7470
DIGC	Direct Aqueous Injection (GC)	UST-70DIGC
DIMS	Direct Aqueous Injection (GC/MS)	"USEPA-8240"
DSPEC	Reactive Cyanide (Distillation, Spectroscopy)	USEPA-CHAPTER 7
DTITRA	Reactive Sulfide (Distillation, Titration)	USEPA-CHAPTER 7
FLUOR	Uranium (Fluorometry)	ASTM-D2907-83
GEA	Gamma Energy Analysis Spectroscopy	ASTM-D3649-85
GFAA	Arsenic (AA, Furnace Technique)	USEPA-7060
GFAA	Lead (AA, Furnace Technique)	USEPA-7421
GFAA	Selenium (AA, Furnace Technique)	USEPA-7740
GFAA	Thallium (AA, Furnace Technique)	USEPA-7841
IC	Ion Chromatography	EPA-600/4-84-01
ICP	Atomic Emission Spectroscopy (ICP)	USEPA-6010
ICP/M	Atomic Emission Spectroscopy (ICP)-Mixed Matrix	USEPA-6010
IGNIT	Pensky-Martens Closed-Cup Ignitability	USEPA-1010
ISE	Fluoride-Low Detection Limit	ASTM-D1179-80-B
ISE	Ammonium Ion	ASTM-D1426-D
LALPHA	Alpha Activity-Low Detection Limit	EPA-680/4-75/1
LEPD	^{129}I	UST-20I02
LSC	^{14}C	UST-20C01
LSC	Tritium	UST-20H03
LTOX	Total Organic Halides-Low Detection Limit	USEPA-9020
PH-Fld	pH-Field	USEPA-9040
PH-Lab	pH-Laboratory	USEPA-9040
SPEC	Total and Amenable Cyanide (Spectroscopy)	USEPA-9010
SPEC	Hydrazine-Low Detection Limit (Spectroscopy)	ASTM-D1385
SSOLID	Suspended Solids	SM-208D
TC	Total Carbon	USEPA-9060
TDS	Total Dissolved Solids	SM-208B
TEMP-Fld	Temperature-Field	Local
TITRA	Alkalinity-Method B (Titration)	ASTM-D1067B
TITRA	Sulfides (Titration)	USEPA-9030
TOC	Total Organic Carbon	USEPA-9060
TOX	Total Organic Halides	USEPA-9020
VOA	Volatile Organics (GC/MS)	USEPA-8240

Analytical Method Acronyms:
AA = atomic absorption spectroscopy.
GC = gas chromatography.
MS = mass spectrometry.
ICP = inductively-coupled plasma spectroscopy.

Constituent	Sample #	Date	Method	Result

References:

ASTM--"1986 Annual Book of ASTM Standards," American Society for Testing and Materials, Philadelphia, Pennsylvania.

EPA--Various methods of the U.S. Environmental Protection Agency, Washington, D.C.

UST--Methods of the United States Testing Company, Incorporated, Richland, Washington.

SM--"Standard Methods for the Examination of Water and Wastewater," 16th ed., American Public Health Association, American Water Works Association and Water Pollution Control Federation, Washington, D.C.

USEPA--"Test Methods for Evaluating Solid Waste Physical/Chemical Methods," 3rd ed., SW-846, U.S. Environmental Protection Agency, Washington, D.C.