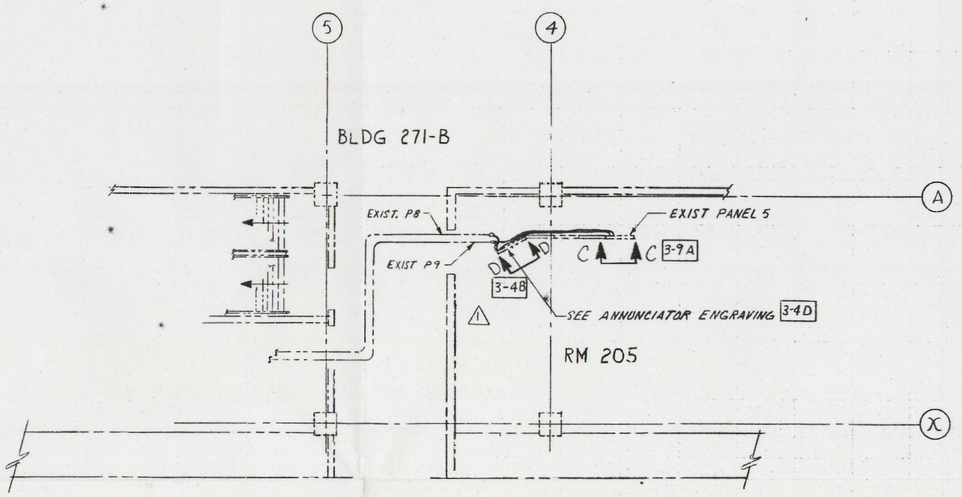

PARTIAL PLAN

SCALE : 1/4" = 1'-0"

NAMEPLATE CODE	A	B	C	D	E
FIRST LINE	BETA-GAMMA RECORDER	FLOW RATE	TOTAL FLOW	FLOW INTEGRATOR	FLOW COMPUTER
SECOND LINE	296-B-13 STACK MONITOR	STACK 296-B-13	STACK 296-B-13	STACK 296-B-13	STACK 296-B-13
THIRD LINE	RR-EXH-1	FI-EXH-1	FQI-EXH-1	FQ-EXH-1	FY-EXH-1

NAMPLATE ENGRAVING SCHEDULE 3-9C

(NAMEPLATE SHALL BE IN ACCORDANCE WITH HPS-I-2-7, TYPE "A" 5/32" LETTERING, BOND IN PLACE)

WINDOW NO.	2-1 △1	1-1 △1
FIRST LINE	296-B-13	296-B-13
SECOND LINE	HI-RADIATION	MONITOR FAIL
THIRD LINE	RAH-EXH-1-2	RA-EXH-1-2

ANNUNCIATOR ENGRAVING 3-7F

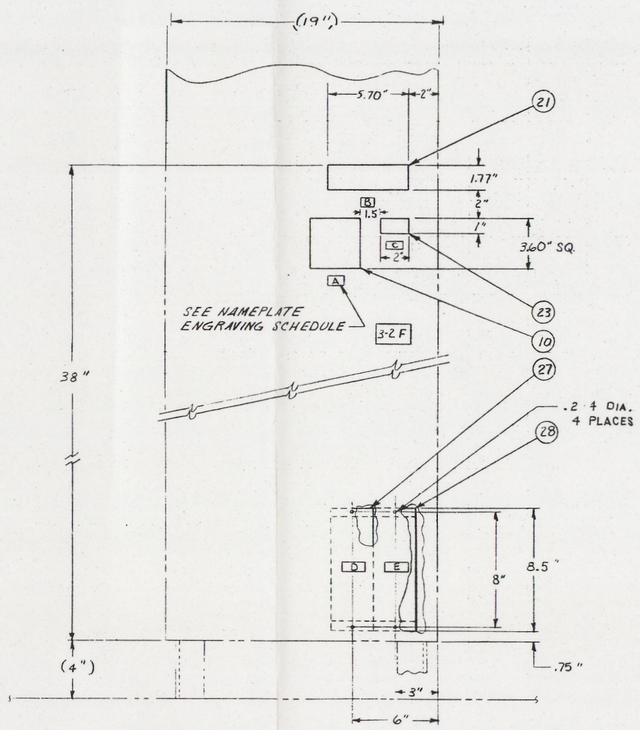

PANEL 5

SECTION C-C 3-8F

1/4" = 1"

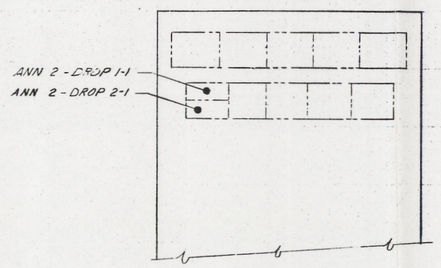

△1 PANEL 1

SECTION D-D 3-3F

CAUTION
NOT COMPLETE WITHOUT
CURRENT STATUS OF OUTSTANDING
ECNS FROM DATA BASE

MAR 24 1993

SEP 1993 RECEIVED EDMC

0031029

Sheets 5 & 6 of this drawing are electrical construction prints.

REVIEW NUMBER	1	2	3	4

THIS DRAWING HAS BEEN APPROVED BY A ROCKWELL DOCUMENT REVIEW BOARD.
REVISION NO. 0
CHAIRMAN J. Cunningham DATE 11/30/83

IMPACT LEVEL I

DRAWING APPROVALS	DATE
F.E. Mathews	2/24/83
APPD. PSTO Rockwell	3/4/83
APPD. E.D. Kuck	11/16/83
F.J. Walton	11/16/83
PROJECTS ENGINEER R.L. STANTON	
P.A. Crayne	11/16/83
A.B. Tilley	11/16/83
E.K. Davidson	11/16/83

U. S. Department of Energy
Richland Operations Office
Rockwell Hanford Operations
Richland, Washington 99352

296-B-13
STACK MONITOR
INSTALLATION

SCALE	BLDG NO.	SHEET NO.
AS NOTED	271-B	5901

CLASSIFICATION NONE | IN NOT REQD
DRAWING NO. H-2-74855 | SHEET NO. 3 | REVISION 6

REV.	DESCRIPTION	REV. NO.
M	CHANGED Q.A. LEVEL TO IMPACT INCORP. E.O. 9859	1

REVISION APPROVALS: QUALITY ASSURANCE F.E. Mathews 2-22-83; RESPONSIBLE ENGINEER A.L. Lebo 2-27-83; CONTROL; CHKD BY DATE; REV BY DATE

REVISIONS: COMMENT PRT ISSUE NO. 1 11/1/83 DATE; CHECK PRT. ISSUE NO. 1 11/7/83 DATE; LAST REV. 1

DRAWING STATUS DT. - E485

REFERENCE DRAWINGS: ZONE NO. | DRAWING TITLE

NEXT USED ON H-2-74855 SH 1

START

0031029

1-1
96-8-13
VLTOR FAIL
EXH-1-2

G 3-7F

CAUTION
NOT COMPLETE WITHOUT
CURRENT [illegible] OUTSTANDING
[illegible]

SEP 1993
RECEIVED
EDMC

9413096.0610

6 of this
are electrical
on prints.

REVIEW NUMBER 0336

THIS DRAWING HAS BEEN APPROVED BY A ROCKWELL DOCUMENT REVIEW BOARD.
REVISION NO. 0
CHAIRMAN J Cammann DATE 11/30/83

IMPACT LEVEL I

DRAWING APPROVALS	DATE
[illegible]	11/30/83
[illegible]	11/30/83
[illegible]	11/30/83
[illegible]	11/30/83
R.L. STANTON	
[illegible]	11/30/83
[illegible]	11/30/83
[illegible]	10/83

U. S. Department of Energy
Richland Operations Office
Rockwell Hanford Operations
Richland, Washington 99352

296-B-13
STACK MONITOR
INSTALLATION

SCALE	SIZE NO.	INDEX NO.
AS NOTED	271-B	5901

CLASSIFICATION	BY	DRAWING NO.	SHEET NO.	SHEET
NONE	NOT REQD	H-2-74855	3	6

REVISIONS			
11/1/83	CHECK PRT. ISSUE NO. 1	11/7/83	1
DRAWING STATUS DI-E485			

REV. NO.	DESCRIPTION	CHKD BY DATE	REV BY DATE
1	CHANGED Q.A. LEVEL TO IMPACT INCORP. E.O. 9859	JTE	

16x