| | | | |
|---|---|---|---|
| COMM'L. | | | |
| T&B # 5333 | | | |
| T&B # 5373 | | | |
| CROUSE-HINDS GUAD 26 | | | |
| CROUSE-HINDS UNY-305 | | | |
| T&B # 5362 | | | |
| COMM'L. | | | |
| T&B # 1245 | | | |
| CROUSE-HINDS UNL-205 | | | |
| CROUSE-HINDS RE-62 | | | |
| T&B # 5363 | | | |

| | | | |
|---|---|---|---|
| 1 | 47 | FV-W01, 2"-2 WAY PLUG VALVE, B.W. | ATI P.O.# 203-920 * |
| 1 | 48 | LV-W02, 2"-2 WAY PLUG VALVE, B.W. | ATI P.O.# 203-920 * |
| 1 | 49 | FV-W40, 2"-3 WAY PLUG VALVE, B.W. | ATI P.O.# 203-920 * |
| 1 | 50 | 3-WAY CONN. PORT PLUG | H-2-32447-8 * |
| 2 | 51 | 2" 45° L.R. ELL, SCH. 40S, SST | ASTM A403, GR.WP-W304L |
| 2 | 52 | "O" RING FOR PT. # 11, 12, 13-ARP # 227, EDPM | ATI P.O. # 203-942 * |
| 2 | 53 | 1/2" 304 L SST PIPE CONN. INSERT x 4 7/16" LG. - ASTM A276 | H-2-32447-4 * |
| 3 | 54 | 1/2" 304L SST PIPE CONN. INSERT x 5 7/16" LG. - ASTM A276 | H-2-32447-5 * |
| 3 | 55 | 1/2" 304L SST PIPE CONN. INSERT x 6 7/16" LG. - ASTM A276 | H-2-32447-6 * |

B

IMPACT LEVEL 3 EDT #100887

ROCKWELL REVIEW COPY ON FILE
SUBMITTAL NO. 105.16
DATE 1-29-87

JUN 1990
RECEIVED
EDMC

| | | DATE |
|---|---|---|
| WHC APPROVAL BY | LD Vanselow | 7/7/88 |
| PROJ ENGR | [signature] | 1/5/87 |
| QA | [signature] | 1/5/87 |
| APPROVED BY | N/A | |
| SAFETY | N/A | |
| APPROVED BY | [signature] | 1/5/87 |
| CHECKED BY | L. L. Judy | 12/11/86 |
| DRAWN BY | P. D. Haipler | 8/19/86 |
| DESIGNED BY | [signature] | 8/19/86 |

**U. S. DEPARTMENT OF ENERGY**
**Richland Operations Office**

Associated Technologies Incorporated
212 S. Tryon St. Charlotte, N.C. 28281

**EQUIPMENT JUMPER ASSEMBLY**
**VALVE SKID, SK-01**

PROJECT TITLE
**TRANSPORTABLE GROUT EQUIPMENT FACILITY**

| PROJ | WO | JOB |
|---|---|---|
| B-475 | | |

| SCALE | BLDG | INDEX |
|---|---|---|
| NOTED | 243-G1 | 4750/8405 |

| DRAWING NUMBER | SHEET | OF | REV |
|---|---|---|---|
| H-2-98703 | 1 | 2 | 0 |

A

0009567
1 of 2

DESCRIPTION | REV

ONS

2 1

OFFICIAL RELEASE
BY WHC
DATE JUL 09 1988

ROCKWELL REVIEW COPY ON FILE
SUBMITTAL NO. 005.14
DATE 6-26-87

IMPACT LEVEL 3
EDT NO. 100887

| | DATE |
|---|---|
| WHC APPROVAL BY FD Vanselow | 7/7/88 |
| PROJ ENGR | 1/5/87 |
| QA | 1/5/87 |
| APPROVED BY N/A | |
| SAFETY N/A | |
| APPROVED BY W Don Rice | 1/5/87 |
| CHECKED BY L.L Judy | 12/11/86 |
| DRAWN BY P.D. Haigler | 8/19/86 |
| DESIGNED BY P.D. Haigler | 8/19/86 |

**U. S. DEPARTMENT OF ENERGY**
**Richland Operations Office**

Associated Technologies Incorporated
212 S. Tryon St.
Charlotte, N.C. 28281

# EQUIPMENT JUMPER ASSEMBLY VALVE SKID, SK-01

PROJECT TITLE
**TRANSPORTABLE GROUT EQUIPMENT FACILITY**

| PROJ | WO | JOB |
|---|---|---|
| B-475 | | |

| SCALE | BLDG | INDEX |
|---|---|---|
| NOTED | 243-G1 | 4750/8405 |

| DRAWING NUMBER | SHEET | OF | REV |
|---|---|---|---|
| H-2-98703 | 2 | 2 | 0 |

| DESCRIPTION | REV |
|---|---|
| VISIONS | |

B

A

0567

2

1

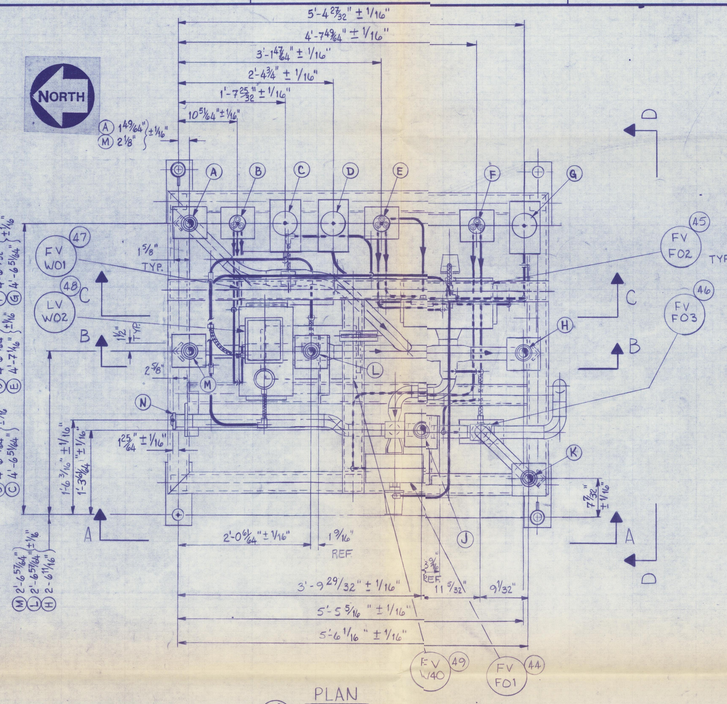


## (1) PLAN ASSEMBLY

SCALE: 1" = 1'-0"

FOR INSTRUMENT AIR & CONDUIT, SEE DETAIL I ON SHEET 2

FOR PROCESS PIPING, SEE DETAIL II ON SHEET 2

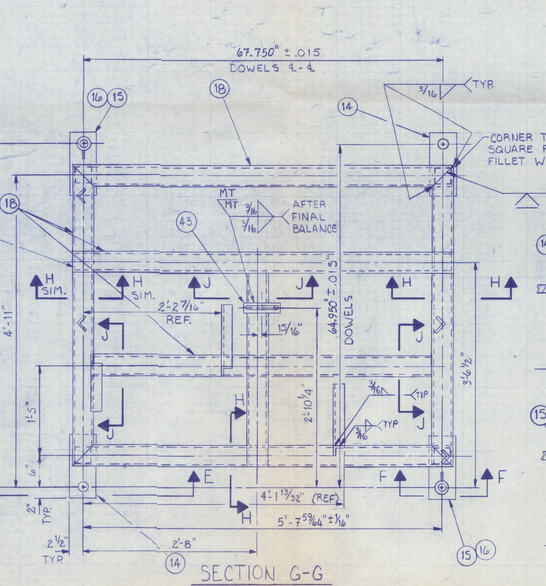


## SECTION G-G

SCALE: 1" = 1'-0"

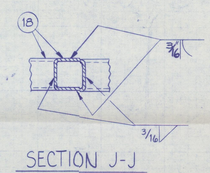


## SECTION J-J

SCALE: NONE

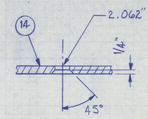


## SECTION E-E

SCALE: NONE

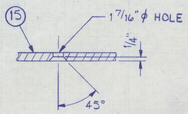


## SECTION F-F

SCALE: NONE

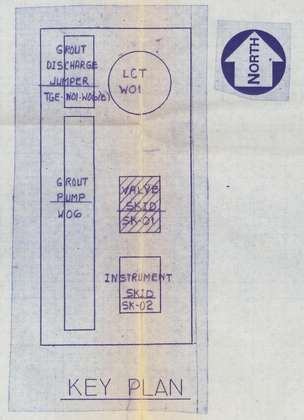


## KEY PLAN

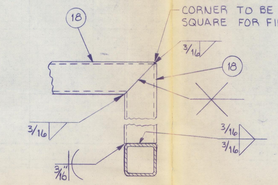


## SECTION I-I

SCALE: NONE

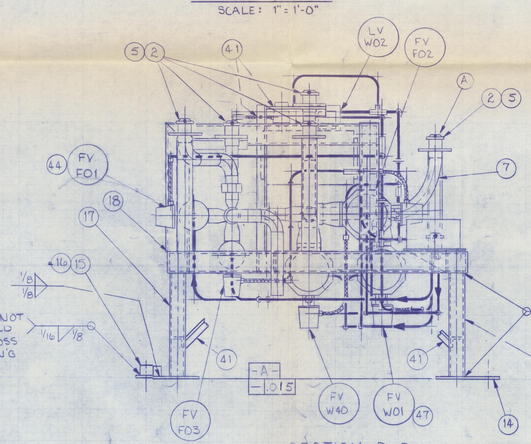


## SECTION D-D

SCALE: 1" = 1'-0"

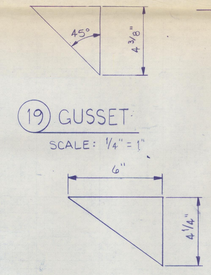


## (19) GUSSET

SCALE: 1/4" = 1"

## (20) GUSSET

SCALE: 1/4" = 1"

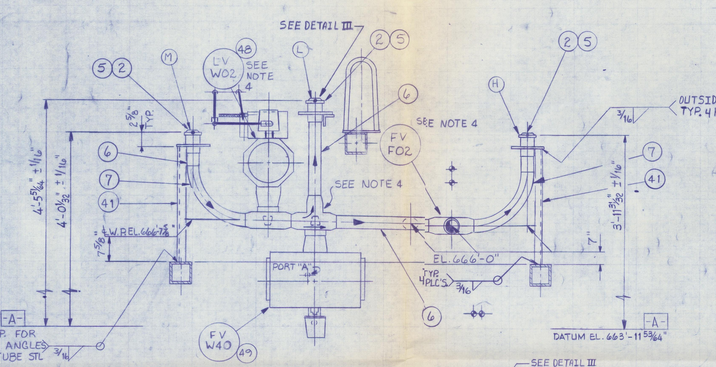


## SECTION B-B

SCALE: 1" = 1'-0"

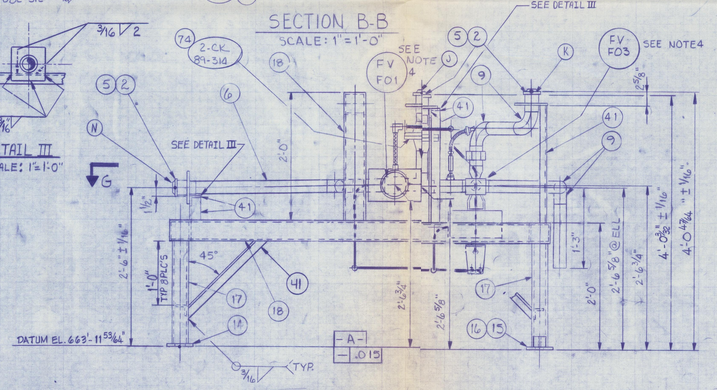


## SECTION A-A

SCALE: 1" = 1'-0"




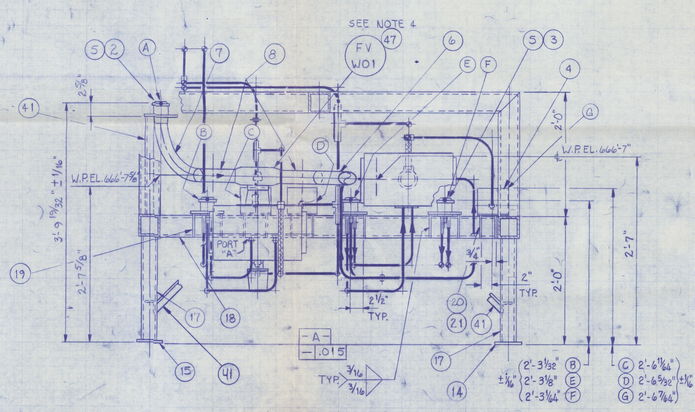


## SECTION C-C

SCALE: 1" = 1'-0"

| QTY | PT. NO. | DESCRIPTION | MATL./ REF. |
|---|---|---|---|
| | 1 | ASSEMBLY, TOTAL APPROX. WT. 1435 # | |
| 7 | 2 | 2" MALE PUREX CONN. NOZZLE | H-2-32446-3 * |
| 3 | 3 | 2" 3-WAY MALE PUREX CONN. NOZZLE | H-2-32447-3 * |
| 3 | 4 | LOWER ELECTRICAL EQUIP. CONN. | H-2-32401-3 * |
| 10 | 5 | KICK PLATE | H-2-98819-5 |
| 12' | 6 | 2" PIPE, SCH. 40S, EFW, SST | ASTM A312, TP 304L |
| 3 | 7 | 2" 90° 5 DIA. BEND, SCH 40S EFW PIPE, SST B.W. | |
| 2 | 8 | 2" 45° 5 DIA. BEND, SCH. 40S EFW PIPE, SST B.W. | |
| 1 | 9 | 2" 90° LR ELL, SCH. 40S | ASTM A403, GR. WP-W 304L |
| 1 | 10 | 2" STD. TEE, SCH. 40S | |
| 2 | 11 | CPV O-SEAL UNION, 2" TAIL PIECE # SSR-8 304L SST, SCH. 40S, ASTM A479 | ATI P.O. # 203-942 * |
| 2 | 12 | CPV O-SEAL UNION, 2" TH'D PIECE # SST-8 304L SST, SCH. 40S, ASTM A479 | * |
| 2 | 13 | CPV O-SEAL UNION, 2" NUT # SON-8 1117 L CS, PLATED | * |
| 2 | 14 | PLATE, 1/2" x 5" x 12", #4 FINISH | ASTM A36, CS |
| 2 | 15 | PLATE, 1/2" x 5" x 12", #4 FINISH | |
| 2 | 16 | FREE NUT RETAINER | H-2-98819-2 |
| 7' | 17 | TUBE STL, 3" x 3" x 3/16" | ASTM A500, GR. B |
| 43' | 18 | TUBE STL, 4" x 4" x 3/16" | |
| 6 | 19 | GUSSET PLATE, 1/4" x 4 3/8" x 4 3/8" (◥ CUT) | ASTM A36, CS |
| 6 | 20 | GUSSET PLATE, 1/4" x 4 1/4" x 6" (◥ CUT) | |
| 3 | 21 | PLATE, 3/8" x 6" x 8" w/ 1/8" RAD. CORNERS | |
| AR | 22 | INSTRUMENT SIGNAL WIRE, TWISTED SHIELDED PAIR OF #16 AWG, 19 STRAND CONCENTRIC BARE COPPER W/ TINNED COPPER DRAIN WIRE, ALUMINUM MYLAR TAPE SHIELD W/ 100% COVERAGE, INNER AND OVERALL JACKET OF 90°C, PVC. | B-475-DC1 REV. 2 8.10.11.2 |
| AR | 23 | WIRE, SINGLE CONDUCTOR, STRANDED COPPER, #12 AWG, 600 VOLT. | |
| 2 | 24 | FLUSH BUSHING, 2" x 1" | CROUSE-HINDS RE-62 |
| 3 | 25 | CONDUIT OUTLET BODY, 1" TEE | CROUSE-HINDS GUAD 36 |
| | 26 | -DELETED | |
| 6 | 27 | 3" O-RING GASKET | CROUSE-HINDS GASK-458 |
| 8' | 28 | CONDUIT, RIGID 1" TBE | GALV. STL |
| 15' | 29 | CONDUIT, RIGID 3/4" TBE | |
| | 30 | | |
| 5 | 31 | FLUSH BUSHING, 1" x 3/4" | CROUSE-HINDS RE 32 |
| | 32 | | |
| 2 | 33 | UNION, RIGID CONDUIT, 1" | CROUSE-HINDS UNF 30S |
| 2 | 34 | UNION, RIGID CONDUIT, 3/4" | CROUSE-HINDS UNF 20S |
| 1 | 35 | 3/4" LIQUID-TIGHT ADAPTER | T&B # 5273 |
| 8 | 36 | PIPE TO TUBE WELD ADAPTER, 1/2" IPS-1/2" TUBE | CAJON 304L-8-MPW-A-BTSW |
| 50' | 37 | TUBING, 1/2" x .049" WALL, SST | ASTM A213, TP 304L |
| 9 | 38 | MALE CONNECTOR, TUBE TO MNPT 1/2" TUBE x 1/4" NPT | SWAGELOK SS-810-1-4 |
| | 39 | -DELETED | |
| 1 | 40 | TUBE SOCKET WELD UNION TEE, 1/4" | CAJON 304L-8-TSW-3 |
| 29 | 41 | ANGLE, 2" x 2" x 1/4" | ASTM A36, CS |
| | 42 | -DELETED- | |
| 1 | 43 | LIFTING BAIL | H-2-98820-5 |
| 1 | 44 | FV-F01, 2" - 3 WAY BALL VALVE, B.W. | ATI P.O. # 203-919 * |
| 1 | 45 | FV-F02, 2" - 3 WAY PLUG VALVE, B.W. | ATI P.O. # 203-920 * |
| 1 | 46 | FV-F03, 2" - 3 WAY BALL VALVE, B.W. | ATI P.O. # 203-919 * |
| 1 | 47 | FV-W01, 2" - 2 WAY PLUG VALVE, B.W. | ATI P.O. # 203-920 * |
| 1 | 48 | LV-W02, 2" - 2 WAY PLUG VALVE, B.W. | ATI P.O. # 203-920 * |
| 1 | 49 | FV-W40, 2" - 3 WAY PLUG VALVE, B.W. | ATI P.O. # 203-920 * |
| 1 | 50 | 3-WAY CONN. PORT PLUG | H-2-32447-B * |
| 2 | 51 | 2" 45° LR ELL, SCH. 40S, SST | ASTM A403, GR WP-W304L |
| 2 | 52 | "O" RING FOR PT # 11, 12, 13-ARP # 227, EDPM | ATI P.O. # 203-942 * |
| 2 | 53 | 1/2" 304L SST PIPE CONN. INSERT x 4 7/16" LG. - ASTM A276 | H-2-32447-4 * |
| 3 | 54 | 1/2" 304L SST PIPE CONN. INSERT x 5 7/16" LG. - ASTM A276 | H-2-32447-5 * |
| 3 | 55 | 1/2" 304L SST PIPE CONN. INSERT x 6 7/16" LG. - ASTM A276 | H-2-32447-6 * |

| QTY | PT. NO. | DESCRIPTION (CONT.) | MATL./ REF. |
|---|---|---|---|
| AR | 56 | INSTRUMENT SIGNAL WIRE, TWISTED SHIELDED 3 CONDUCTOR OF #16 AWG, 19 STRAND CONCENTRIC BARE COPPER W/ TINNED COPPER DRAIN WIRE, ALUMINUM MYLAR TAPE SHIELD W/ 100% COVERAGE, INNER AND OVERALL JACKET OF 90°C PVC. | |
| AR | 57 | 3/4" ϕ LIQUID-TIGHT FLEXIBLE METAL CONDUIT | COMM'L. |
| 7 | 58 | 3/4" ϕ LIQUID-TIGHT CONDUIT FITTING-STRAIGHT W/ SST SEALING RING (AR) | T&B # 5333 |
| 4 | 59 | 3/4" ϕ LIQUID-TIGHT CONDUIT FITTING-90° - NYLON INSULATED | T&B # 5373 |
| 3 | 60 | CONDUIT OUTLET BODY, 3/4" TEE | CROUSE-HINDS GUAD 26 |
| 1 | 61 | UNION, RIGID CONDUIT, 1" MALE x FEMALE | CROUSE-HINDS UNY-30S |
| 1 | 62 | 1/2" ϕ LIQUID-TIGHT CONDUIT FITTING-STRAIGHT NYLON INSUL. CONNECTOR | T&B # 5362 |
| AR | 63 | 1/2" ϕ LIQUID-TIGHT FLEXIBLE METAL CONDUIT | COMM'L. |
| 1 | 64 | MALE ENLARGER 1/2" TO 3/4". | T&B # 1245 |
| 1 | 65 | 90° UNION ELL, RIGID CONDUIT, 3/4" x 3/4" | CROUSE-HINDS UNL-20S |
| 1 | 66 | FLUSH BUSHING, 2" x 3/4" | CROUSE-HINDS RE-62 |
| 1 | 67 | 3/4" ϕ LIQUID-TIGHT CONDUIT FITTING-STRAIGHT NYLON INSULATED | T&B # 5363 |

CONT. ON SHEET 2

IMPACT LEVEL 3 EDT #100887

| | | |
|---|---|---|
| WHC APPROVAL BY B.D. Vanslow | DATE | 7/7/88 |
| PROJ ENGR | | 1/4/88 |
| QA | | 1/4/88 |
| APPROVED BY | | |
| SAFETY | | |
| APPROVED BY | | |
| CHECKED BY | | 12/11/87 |
| DRAWN BY | | 8/19/87 |
| DESIGNED BY | | 8/19/87 |

U. S. DEPARTMENT OF ENERGY
Richland Operations Office

Associated Technologies Incorporated — 200 S. 35th St. Boise, Idaho 83707

EQUIPMENT JUMPER ASSEMBLY
VALVE SKID, SK-01

PROJECT TITLE: TRANSPORTABLE GROUT EQUIPMENT FACILITY

| PROJ | WO | JOB |
|---|---|---|
| B-475 | | |
| SCALE: NOTED | BLDG 243-G1 | INDEX 4750/8405 |

| DRAWING NUMBER | SHEET | OF | REV |
|---|---|---|---|
| H-2-98703 | 1 | 2 | 0 |

00095637
1 of 2

| NUMBER | TITLE |
|---|---|
| H-2-98505 | ELEMENTARY WIRING DIAG. LCT/MX MOD. |
| H-2-98665 | ARRGT LCT/MX MODULE PLAN |
| H-2-98814 | DRAWING LIST |
| NEXT USED ON | H-2-98670 |

DRAWING TRACEABILITY LIST — REFERENCES

| REV | DESCRIPTION | APPROVAL BY-DATE | BY-DATE |
|---|---|---|---|
| | | | |

REVISIONS

COMMENT REVIEW

MICROFILMED

ROCKWELL REVIEW COPY ON FILE
SUBMITTAL NO. 105.16
DATE 1-29-87

OFFICIAL RELEASE BY WHC DATE JUL 09 1988

JUN 1990 RECEIVED EDMC

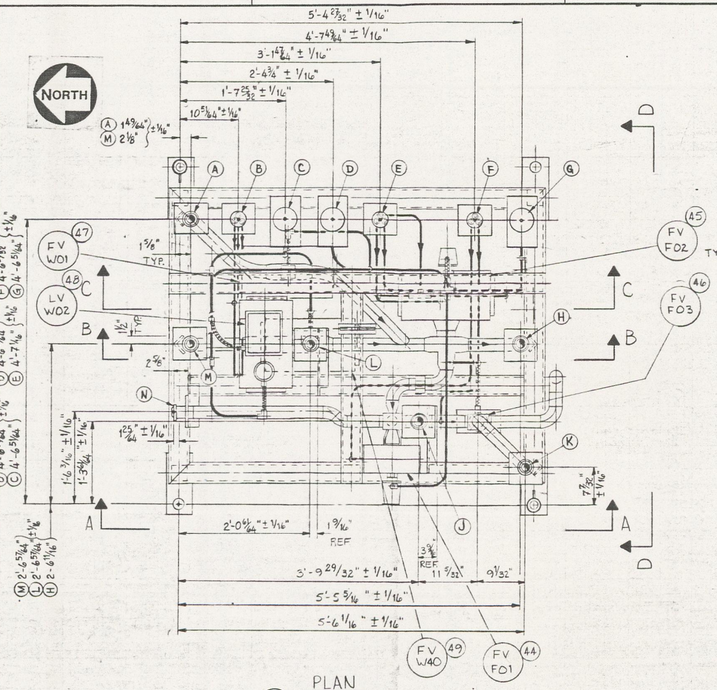


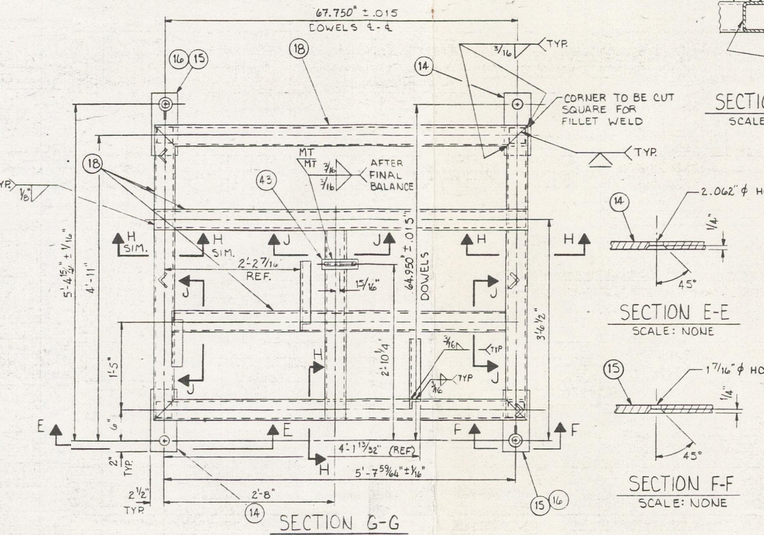


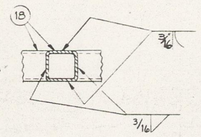


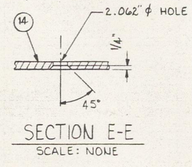


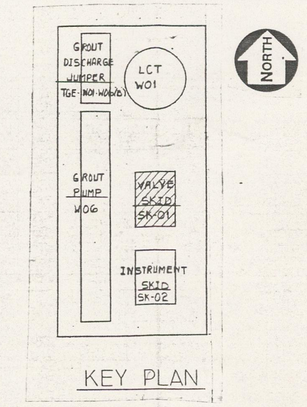


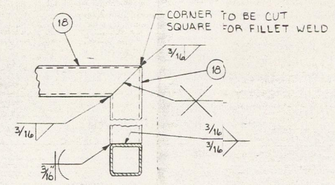


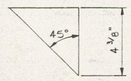


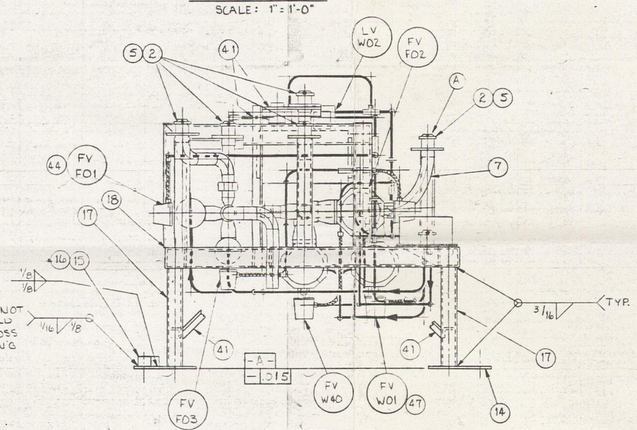


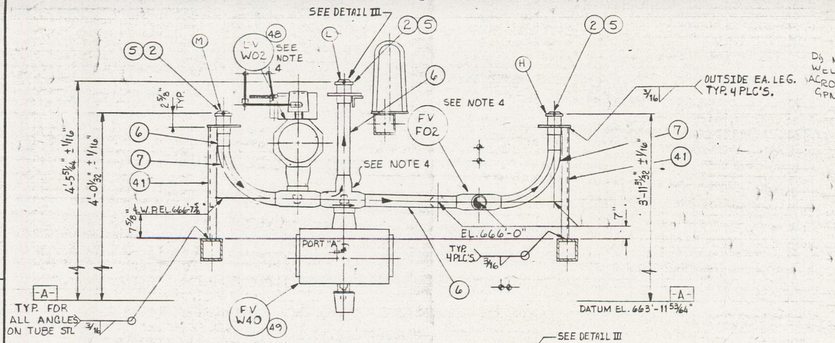


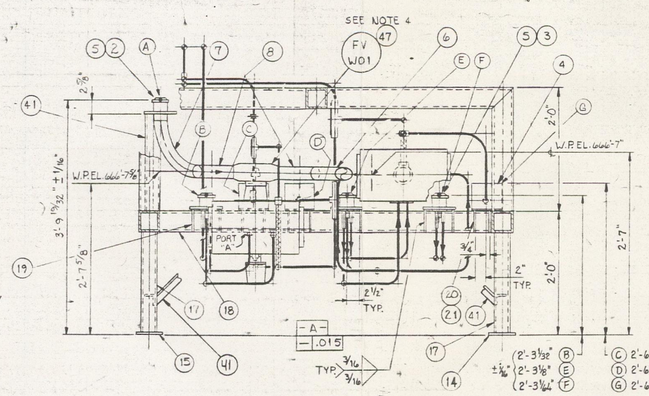


| QTY | PT. NO. | DESCRIPTION | MATL./ REF. |
|---|---|---|---|
| X | 1 | ASSEMBLY, TOTAL APPROX WT. 1435 # | |
| 7 | 2 | 2" MALE PUREX CONN. NOZZLE | H-2-32446-3 * |
| 3 | 3 | 2" 3-WAY MALE PUREX CONN. NOZZLE | H-2-32447-3 * |
| 3 | 4 | LOWER ELECTRICAL EQUIP CONN. | H-2-32401-3 * |
| 10 | 5 | KICK PLATE | H-2-98819-5 |
| 12' | 6 | 2" PIPE, SCH. 40S, EFW, SST | ASTM A312, TP 304L |
| 3 | 7 | 2" 90° S DIA. BEND, SCH 40S EFW PIPE, SST B.W. | |
| 2 | 8 | 2" 45° S DIA. BEND, SCH 40S EFW PIPE, SST B.W. | |
| 4 | 9 | 2" 90° LR ELL, SCH. 40S | ASTM A403, GR. WP-W304L |
| 1 | 10 | 2" STD. TEE, SCH. 40S | |
| 2 | 11 | CPV O-SEAL UNION, 2" TAIL PIECE = 58R-B 304L SST, SCH. 40S, ASTM A479 | ATI P.O. # 203-942 * |
| 2 | 12 | CPV O-SEAL UNION, 2" THD PIECE = 58T-B 304L SST, SCH. 40S, ASTM A479 | * |
| 2 | 13 | CPV O-SEAL UNION, 2" NUT = 50N-B 1117 L CS, PLATED | * |
| 2 | 14 | PLATE, 1/2" x 5" x 12", #4 FINISH | ASTM A36, CS |
| 2 | 15 | PLATE, 1/2" x 5" x 12", #4 FINISH | |
| 2 | 16 | FREE NUT RETAINER | H-2-98819-2 |
| 7' | 17 | TUBE STL, 3" x 3" x 3/16" | ASTM A500, GR. B |
| 43' | 18 | TUBE STL, 4" x 4" x 3/16" | |
| 6 | 19 | GUSSET PLATE, 1/4" x 4 3/8" x 4 3/8" (◹ CUT) | ASTM A36, CS |
| 6 | 20 | GUSSET PLATE, 1/4" x 4 1/8" x 6" (◹ CUT) | |
| 3 | 21 | PLATE, 3/8" x 6" x 8" w/ 1/8" RAD. CORNERS | |
| AR | 22 | INSTRUMENT SIGNAL WIRE, TWISTED SHIELDED PAIR OF #16 AWG, 19 STRAND CONCENTRIC BARE COPPER W/ TINNED COPPER DRAIN WIRE, ALUMINUM MYLAR TAPE SHIELD W/ 100% COVERAGE, INNER AND OVERALL JACKET OF 90°C, PVC. | B-475-DC1 REV. 2 8.10.11.2 |
| AR | 23 | WIRE, SINGLE CONDUCTOR, STRANDED COPPER, #12 AWG, 600 VOLT. | |
| 2 | 24 | FLUSH BUSHING, 2" x 1" | CROUSE-HINDS RE-63 |
| 3 | 25 | CONDUIT OUTLET BODY, 1" TEE | CROUSE-HINDS GUAD 36 |
| | 26 | -DELETED | |
| 6 | 27 | 3" O-RING GASKET | CROUSE-HINDS GASK-45B |
| 8' | 28 | CONDUIT, RIGID 1" TBE | GALV. STL |
| 15' | 29 | CONDUIT, RIGID 3/4" TBE | |
| | 30 | | |
| 5 | 31 | FLUSH BUSHING, 1" x 3/4" | CROUSE-HINDS RE 32 |
| | 32 | | |
| 2 | 33 | UNION, RIGID CONDUIT, 1" | CROUSE-HINDS UNF 305 |
| 2 | 34 | UNION, RIGID CONDUIT, 3/4" | CROUSE-HINDS UNF 205 |
| 1 | 35 | 3/4" LIQUID-TIGHT ADAPTER | T+B # 5273 |
| 8 | 36 | PIPE TO TUBE WELD ADAPTER, 1/2" IPS-1/2" TUBE | CAJON 304L-8-MPW-A-BTSW |
| 50' | 37 | TUBING, 1/2" x .049" WALL, SST | ASTM A213, TP 304 L |
| 9 | 38 | MALE CONNECTOR, TUBE TO MNPT 1/2" TUBE x 1/4 NPT | SWAGELOK SS-810-1-4 |
| | 39 | -DELETED | |
| 1 | 40 | TUBE SOCKET WELD UNION TEE, 1/4" | CAJON 304L-8-TSW-3 |
| 29 | 41 | ANGLE, 2" x 2" x 1/4" | ASTM A36, CS |
| | 42 | -DELETED- | |
| 1 | 43 | LIFTING BAIL | H-2-98820-5 |
| 1 | 44 | FV-FO1, 2"-3 WAY BALL VALVE, B.W | ATI P.O. # 203-919 * |
| 1 | 45 | FV-FO2, 2"-3 WAY PLUG VALVE, B.W. | ATI P.O. # 203-920 * |
| 1 | 46 | FV-FO3, 2"-3 WAY BALL VALVE, B.W. | ATI P.O. # 203-919 * |
| 1 | 47 | FV-WO1, 2"-2 WAY PLUG VALVE, B.W. | ATI P.O. # 203-920 * |
| 1 | 48 | LV-WO2, 2"-2 WAY PLUG VALVE, B.W. | ATI P.O. # 203-920 * |
| 1 | 49 | FV-W4O, 2-3 WAY PLUG VALVE, B.W. | ATI P.O. # 203-920 * |
| 1 | 50 | 3-WAY CONN. PORT PLUG | H-2-32447-B * |
| 2 | 51 | 2" 45° LR ELL, SCH. 40S, SST | ASTM A403, GR WP-W304L |
| 2 | 52 | "O" RING FOR PT # 11, 12, 13-ARP # 227, EDPM | ATI P.O. # 203-942 * |
| 2 | 53 | 1/2" 304 L SST PIPE CONN. INSERT x 4 7/16" LG - ASTM A276 | H-2-32447-4 * |
| 3 | 54 | 1/2" 304L SST PIPE CONN. INSERT x 5 7/16" LG. - ASTM A276 | H-2-32447-5 * |
| 3 | 55 | 1/2" 304L SST PIPE CONN. INSERT x 6 7/16" LG. - ASTM A276 | H-2-32447-6 * |

| QTY | PT. NO. | DESCRIPTION (CONT.) | MATL./ REF. |
|---|---|---|---|
| AR | 56 | INSTRUMENT SIGNAL WIRE, TWISTED SHIELDED 3 CONDUCTOR OF #16 AWG, 19 STRAND CONCENTRIC BARE COPPER W/ TINNED COPPER DRAIN WIRE, ALUMINUM MYLAR TAPE SHIELD W/ 100% COVERAGE, INNER AND OVERALL JACKET, OF 90°C PVC. | |
| AR | 57 | 3/4" ϕ LIQUID-TIGHT FLEXIBLE METAL CONDUIT | COMM'L. |
| 7 | 58 | 3/4" ϕ LIQUID-TIGHT CONDUIT FITTING-STRAIGHT W/SST SEALING RING (AR) | T&B # 5333 |
| 4 | 59 | 3/4" ϕ LIQUID-TIGHT CONDUIT FITTING-90°-NYLON INSULATED | T&B # 5373 |
| 3 | 60 | CONDUIT OUTLET BODY, 3/4" TEE | CROUSE-HINDS GUAD 36 |
| 1 | 61 | UNION, RIGID CONDUIT, 1" MALE x FEMALE | CROUSE-HINDS UNY-305 |
| 1 | 62 | 1/2" ϕ LIQUID-TIGHT CONDUIT FITTING-STRAIGHT NYLON INSUL. CONNECTOR | T&B # 5362 |
| AR | 63 | 1/2" ϕ LIQUID-TIGHT FLEXIBLE METAL CONDUIT | COMM'L. |
| 1 | 64 | MALE ENLARGER 1/2" TO 3/4" | T&B # 1245 |
| 1 | 65 | 90° UNION ELL, RIGID CONDUIT, 3/4" x 3/4" | CROUSE-HINDS UNL-105 |
| 1 | 66 | FLUSH BUSHING, 2" x 3/4" | CROUSE-HINDS RE-82 |
| 1 | 67 | 3/4" ϕ LIQUID-TIGHT CONDUIT FITTING-STRAIGHT NYLON INSULATED | T&B # 5363 |

CONT. ON SHEET 2

IMPACT LEVEL 3 EDT #100887

| | | | |
|---|---|---|---|
| WMC APPROVAL BY B.D. Vanselow | DATE 7/1/97 | U. S. DEPARTMENT OF ENERGY Richland Operations Office | |
| PROJ ENGR | 1/4/97 | | |
| QA | 1/4/97 | Associated Technologies Incorporated | P.O. BOX 1500 RICHLAND, WA 99352 |
| APPROVED BY N/A | | EQUIPMENT JUMPER ASSEMBLY | |
| SAFETY N/A | | VALVE SKID, SK-01 | |
| APPROVED BY | | PROJECT TITLE TRANSPORTABLE GROUT EQUIPMENT FACILITY | |
| CHECKED BY | 1/31/97 | PROJ B-475 WC | JOB |
| DRAWN BY P.L. Hairgrove | 6/9/96 | SCALE NOTED BLDG 243-G1 | INDEX 4750/8405 |
| DESIGNED BY | 5/14/96 | DRAWING NUMBER H-2-98703 SHEET 1 OF 2 | REV 0 |

ROCKWELL REVIEW COPY ON FILE SERIAL NO. 105.16 DATE 7-19-97

OFFICIAL RELEASE BY WMC DATE JUL 09 1997

JUN 1990 RECEIVED EDMC

| NUMBER | TITLE |
|---|---|
| DRAWING TRACEABILITY LIST | |
| H-2-98505 | ELEMENTARY WIRING DIAG. LCT/MX MOD. |
| H-2-96665 | ARRGT LCT/MX MODULE PLAN |
| H-2-98814 | DRAWING LIST |
| REFERENCES | |
| NEXT USED ON | H-2-98670 |

MICROFILMED

| BY-DATE | APPROVAL | BY-DATE | APPROVAL | REV BY DATE | DESCRIPTION | REV |
|---|---|---|---|---|---|---|
| REVISIONS | | | | | | |

COMMENT REVIEW

0095677

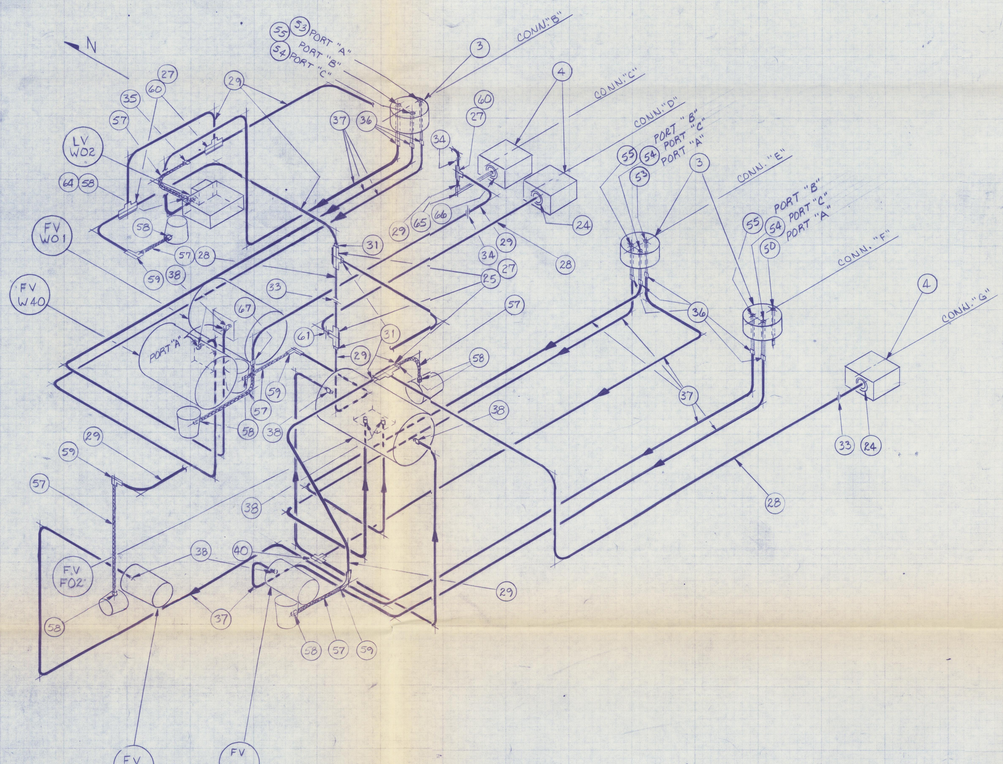


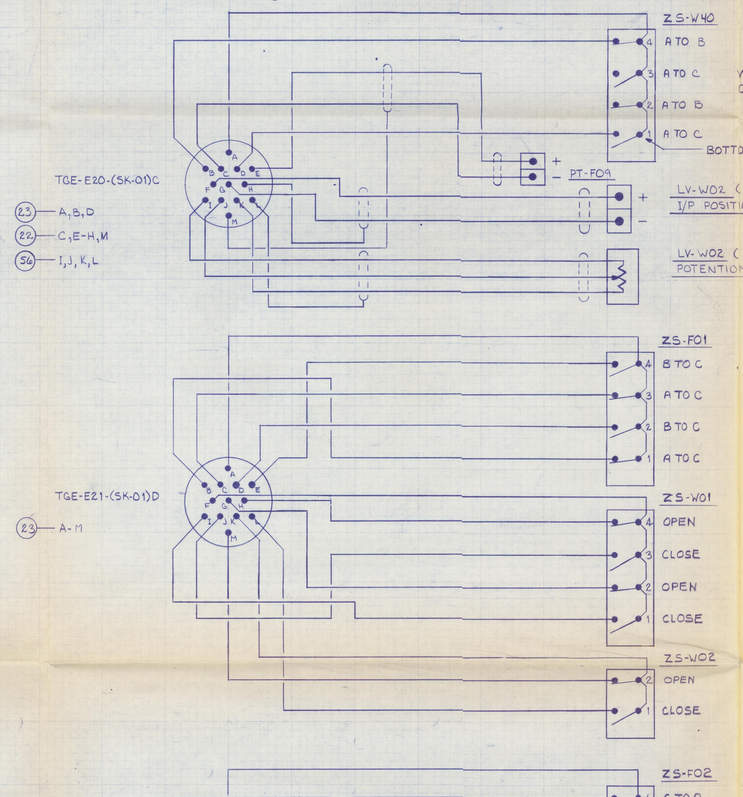


## General Notes:

1. ALL PIPING MATERIALS SHALL BE IN ACCORDANCE WITH A.T.I. PIPING SPECIFICATION NO. 203-M-002.
2. PIPING AND DUNNAGE SHALL BE FABRICATED AND ASSEMBLED IN ACCORDANCE WITH A.T.I. FABRICATION AND ASSEMBLY OF THE LIQUID COLLECTION TANK/MIXER MODULE SPECIFICATION NO. 203-M-012.
3. ALL PARTS WITH AN ASTERISK (*) IN THE MATERIAL/REF. COLUMN WILL BE SUPPLIED BY A.T.I.
4. CONTRACTOR TO VERIFY ORIENTATION OF FLOW, ACTUATOR, AND LIMIT SWITCHES ON VALVES BEFORE INSTALLATION. CONTRACTOR TO ROTATE LIMIT SWITCH ON TOP OF VALVE ACTUATOR FOR FV-F01 & FV-W40 SO THAT CONDUIT CONNECTION IS IN THE LOCATION SHOWN ON THIS DRAWING.

| QTY. | PT. NO. | DESCRIPTION (CONT.) | MATL/REF |
|---|---|---|---|
| 1 | 68 | ½"-3000# THREADED END WIPPOLET, SST | BONNEY FORGE ASTM A182 GR.F, 304L |
| 1 | 69 | PT-F09, PRESSURE TRANSMITTER | ATI R-203-717 * |
| 2 | 70 | 2"-300# R.F. W.N. FLG., ANSI B16.5 125-250 MICRO INCHES RMS SURFACE FINISH | ASTM A182 GR.F 304L SST |
| 2 | 71 | 2" GASKET, SPIRAL WOUND, 304 SST W/ CARBON FIBER FILLER | FLEXITALLIC TYPE CG - 1/8" NOM. THK. |
| 8 | 72 | BOLT, 5/8-11 UNC X 3 3/8" LG., CLASS 2A | ASTM A193 GR.B7 ZINC PL ALLOY STL |
| 8 | 73 | NUT, 5/8-11 UNC-2B, ALLOY STL | ASTM A194 GR.2H ZINC PL |
| 1 | 74 | 2-CK-89-314, FLG. INSERT CHECK VALVE | ATI R-203-921 * |
| AR | 75 | CONDUIT OUTLET BODY, 3/4"-90° ELL | CROUSE-HINDS GUAN 26 |

## INSTRUMENT AIR & CONDUIT DETAIL I

SCALE: NONE

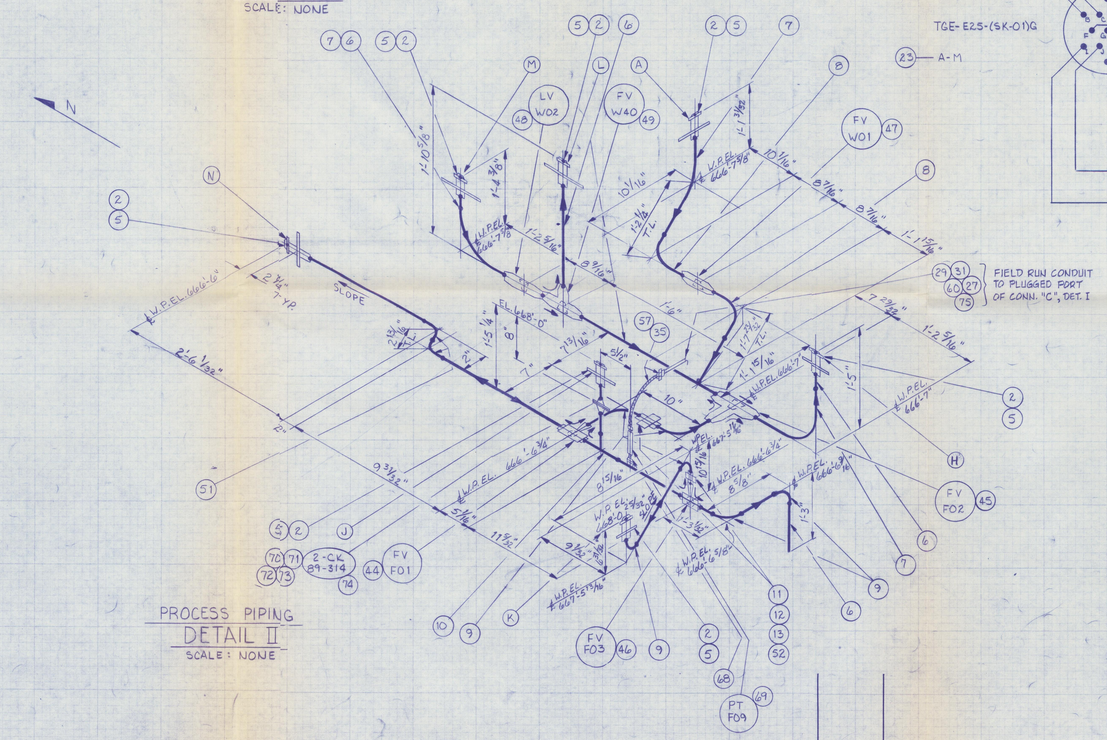


## PROCESS PIPING DETAIL II

SCALE: NONE

## WIRING DIAGRAM

SCALE: NONE

OFFICIAL RELEASE BY WHC DATE JUL 09 1988

ROCKWELL REVIEW COPY ON FILE SUBMITTAL NO. 209.14 DATE 6-26-87

IMPACT LEVEL 3

EDT NO. 100887

| | | DATE |
|---|---|---|
| WHC APPROVAL BY S.D. Vanselow | | 7/7/88 |
| PROJ ENGR | | 11/87 |
| QA | | 11/7/87 |
| APPROVED BY | | |
| SAFETY | | |
| APPROVED BY | | 11/5/87 |
| CHECKED BY | | 12/1/86 |
| DRAWN BY | | 8/19/86 |
| DESIGNED BY | | 8/19/86 |

U. S. DEPARTMENT OF ENERGY
Richland Operations Office

Advanced Technologies Incorporated — 1725 Jadwin Ave. Richland, WA 99352

EQUIPMENT JUMPER ASSEMBLY
VALVE SKID, SK-01

PROJECT TITLE: TRANSPORTABLE GROUT EQUIPMENT FACILITY

| PROJ | WO | JOB |
|---|---|---|
| B-475 | | |

| SCALE | BLDG | INDEX |
|---|---|---|
| NOTED | 243-G1 | 4750/8405 |

| DRAWING NUMBER | SHEET | OF | REV |
|---|---|---|---|
| H-2-98703 | 2 | 2 | 0 |

| NUMBER | TITLE | REFERENCES |
|---|---|---|
| DRAWING TRACEABILITY LIST | | NEXT USED ON H-2-98670 |
| H-2-98814 | DRAWING LIST | |

MICROFILMED

| BY-DATE APPROVAL | BY-DATE APPROVAL | REV BY DATE | DESCRIPTION | REV |
|---|---|---|---|---|
| REVISIONS | | | | |
| COMMENT REVIEW | | | | |

0098567

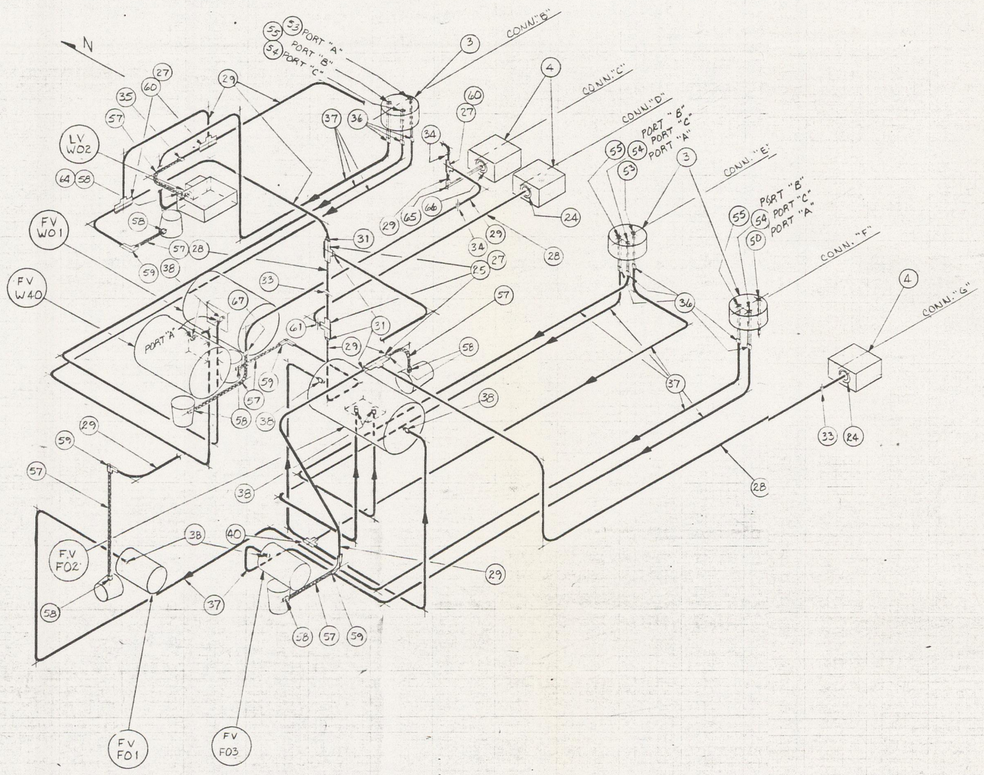


INSTRUMENT AIR & CONDUIT
DETAIL I
SCALE: NONE

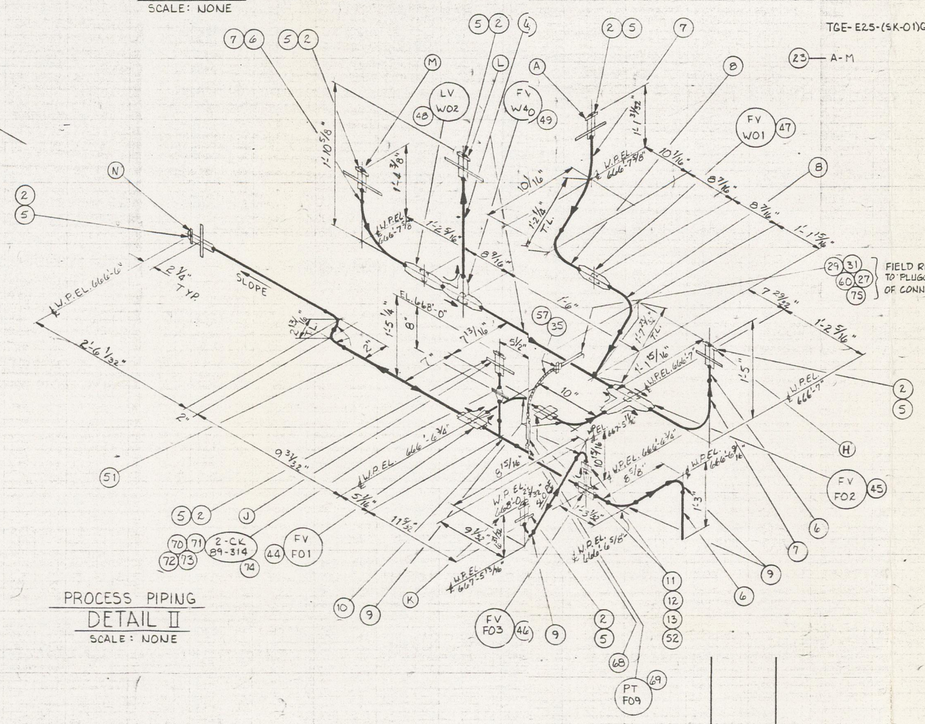


PROCESS PIPING
DETAIL II
SCALE: NONE

TGE-E20-(SK-01)C
23 — A, B, D
22 — C, E-H, M
56 — I, J, K, L

TGE-E21-(SK-01)D
23 — A-M

TGE-E25-(SK-01)G
23 — A-M

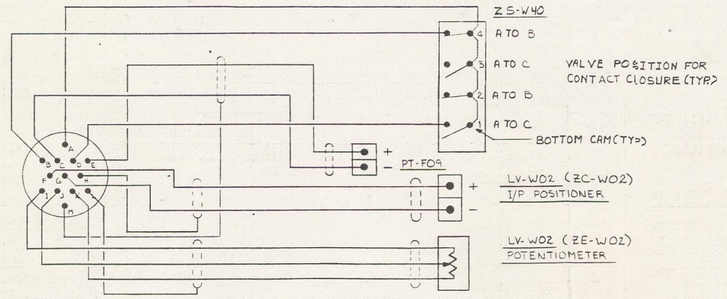


WIRING DIAGRAM
SCALE: NONE

GENERAL NOTES:

1. ALL PIPING MATERIALS SHALL BE IN ACCORDANCE WITH A.T.I. PIPING SPECIFICATION NO. 203-M-002.
2. PIPING AND DUNNAGE SHALL BE FABRICATED AND ASSEMBLED IN ACCORDANCE WITH A.T.I. FABRICATION AND ASSEMBLY OF THE LIQUID COLLECTION TANK/MIXER MODULE SPECIFICATION NO. 203-M-012.
3. ALL PARTS WITH AN ASTERISK (*) IN THE MATERIAL/REF. COLUMN WILL BE SUPPLIED BY A.T.I.
4. CONTRACTOR TO VERIFY ORIENTATION OF FLOW, ACTUATOR, AND LIMIT SWITCHES ON VALVES BEFORE INSTALLATION. CONTRACTOR TO ROTATE LIMIT SWITCH ON TOP OF VALVE ACTUATOR FOR FV-F01 & FV-W40 SO THAT CONDUIT CONNECTION IS IN THE LOCATION SHOWN ON THIS DRAWING.

| QTY. | PT. NO. | DESCRIPTION (CONT.) | MATL/REF |
|---|---|---|---|
| 1 | 68 | ½"-3000# THREADED END WIPPOLET, SST | BONNEY FORGE ASTM A182 GR F, 304 L |
| 1 | 69 | PT-F09, PRESSURE TRANSMITTER | ATI R-203-717 * |
| 2 | 70 | 2"-300# R.F. W.N. FLG., ANSI B16.5 125-250 MICRO INCHES RMS SURFACE FINISH | ASTM A182 GR.F 304L SST |
| 2 | 71 | 2" GASKET, SPIRAL WOUND, 304 SST W/ CARBON FIBER FILLER | FLEXITALLIC TYPE CG - ⅛" NOM. THK. |
| 8 | 72 | BOLT, ⅝-11 UNC x 3⅜" LG., CLASS 2A | ASTM A193 GR.B7 ZINC PL |
| 8 | 73 | NUT, ⅝-11 UNC-2B, ALLOY STL | ASTM A194 GR. 2H ZINC PL |
| 1 | 74 | 2-CK-89-314, FLG. INSERT CHECK VALVE | ATI R-203-921 * |
| AR | 75 | CONDUIT OUTLET BODY, ¾"-90° ELL | CROUSE-HINDS GUAN 26 |

OFFICIAL RELEASE BY WHC
DATE JUL 09 1988

ROCKWELL REVIEW COPY ON FILE
SUBMITTAL NO. 200,14
DATE 6-26-87

IMPACT LEVEL 3
EDT NO. 100887

| | | |
|---|---|---|
| WHC APPROVAL BY S.D. Vanselow | DATE | 7/1/88 |
| PROJ ENGR | | 1/4/87 |
| QA | | 1/4/87 |
| APPROVED BY | | |
| SAFETY | | |
| APPROVED BY | | 11/5/87 |
| CHECKED BY | | 8/31/87 |
| DRAWN BY | | 8/19/87 |
| DESIGNED BY | | 8/19/87 |

U. S. DEPARTMENT OF ENERGY
Richland Operations Office

Associated Architects & Engineers, Incorporated

EQUIPMENT JUMPER ASSEMBLY
VALVE SKID, SK-01

PROJECT TITLE: TRANSPORTABLE GROUT EQUIPMENT FACILITY

| PROJ | WO | JOB |
|---|---|---|
| B-475 | | |

| SCALE | BLDG | INDEX |
|---|---|---|
| NOTED | 243-G1 | 4750/8405 |

| DRAWING NUMBER | SHEET | OF | REV |
|---|---|---|---|
| H-2-98703 | 2 | 2 | 0 |

| NUMBER | TITLE |
|---|---|
| | DRAWING TRACEABILITY LIST |

| NUMBER | TITLE |
|---|---|
| H-2-98814 | DRAWING LIST |
| REFERENCES | |
| NEXT USED ON | H-2-98670 |

MICROFILMED

| BY-DATE APPROVAL | BY-DATE APPROVAL | REV BY DATE | DESCRIPTION | REV |
|---|---|---|---|---|
| REVISIONS | | | | |
| COMMENT REVIEW | | | | |

0009567