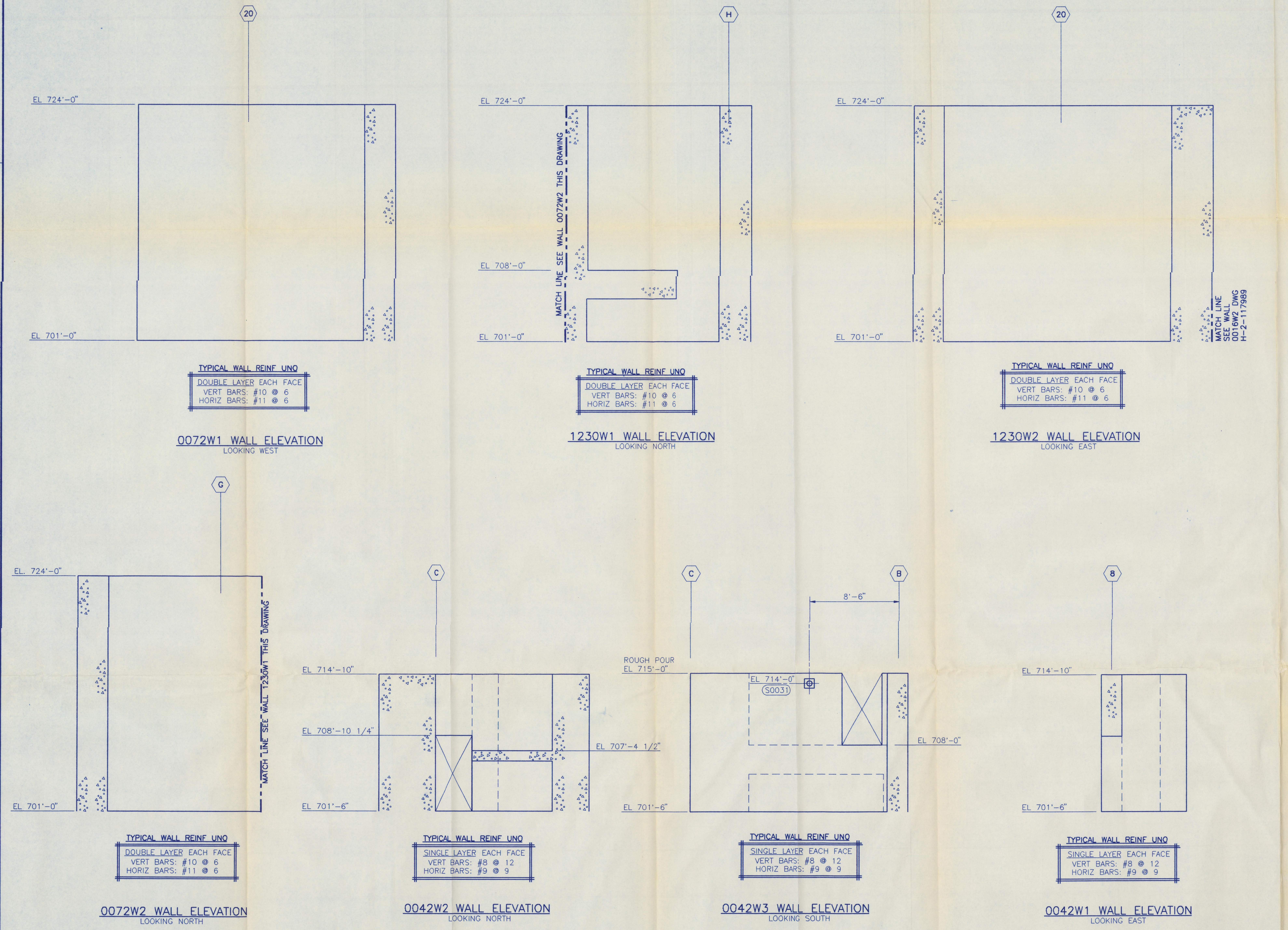

NOTES:

1. FOR GENERAL NOTES AND TYPICAL DETAILS SEE DRAWING H-2-117425.
2. FOR WALL LOCATION PLAN AND DRAWING REFERENCE SEE DRAWING H-2-117939 SHEET 1.

0029890
5 of 8

QUALITY LEVEL I
SAFETY CLASS 1

FOR CLARIFICATIONS TO BID SCOPE REFER TO DRAWINGS H-2-117427, H-2-117428, AND H-2-117429.

REV NO.	DATE	REVISION DESCRIPTION	APPROVAL INITIALS
0	11/12/92	APPROVED FOR CONSTRUCTION OF BASE MAT ONLY	(initials)

CADFILE B117985A — CADCODE 2B:IBM:ACD2:10.C2:SS

ENGINEERING RELEASE
REV. ______ DATE ______
ERO. ______

SIGNATURE		DATE
PROJ. DIR.		
Q.A. MGR.		
INDEPENDENT SAFETY MGR.		
PROJECT MGR.		
SYSTEMS MGR.		
ENGINEERING MGR.		
SUPERVISOR	(signature)	11/11/92
DESIGN ENGINEER	(signature)	11/11/92
CHECKED	M Bevalles	11/11/92
DRAWN	V. KOLDRE	03/25/92

U.S.DEPARTMENT OF ENERGY
Richland Field Office
DE - AC06-86RL10838

NOV 13 1992

FLUOR DANIEL, INC.
ADVANCED TECHNOLOGY DIVISION

STRUCTURAL VIT BLDG WALL ELEVATIONS

PROJECT TITLE: HANFORD WASTE VITRIFICATION PLANT

PROJECT	FLUOR CONTRACT NO.	CWBS NO.
B-595	8457	B210A

SCALE	BLDG. NO.	INDEX NO.
1/4" = 1'-0"	1	

CLASSIFICATION	BY	DRAWING NUMBER	SHEET	OF	REV.
NONE	NOT REQ'D	H-2-117985	1	2	0

DWG. NO.	DRAWING TITLE
H-2-117426	TUNNEL CONFIG PLAN & DWG INDEX

REFERENCE DRAWINGS
NEXT USED ON

H-2-117985 0 1 2 AFC

DISTRIBUTION CODE: 103
S113 ACAD
INITIALS: V.K.
DATE: 11/06/92

r1 Nov 06 17:32:14 1992 V CAD1 P:\PLOTS\VA17212.PLT

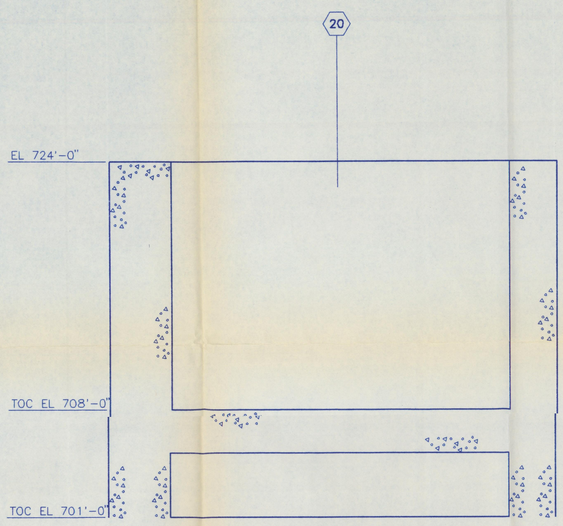

WALL REINF
SINGLE LAYER EACH FACE
VERT BARS #7 @ 9
HORIZ BARS #7 @ 9

0072W3 WALL ELEVATION
LOOKING WEST

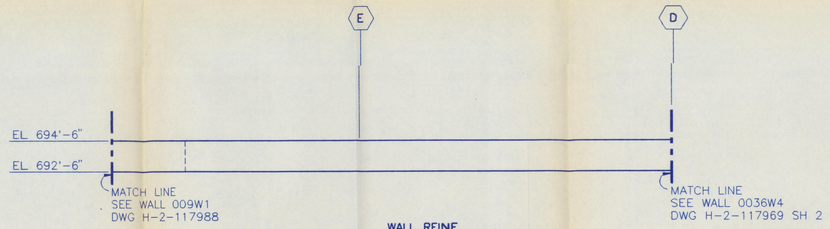

WALL REINF
SINGLE LAYER EACH FACE
VERT BARS #11 @ 6
HORIZ BARS #11 @ 6

0014W3 WALL ELEVATION
LOOKING SOUTH

NOTES:

1. FOR GENERAL NOTES AND TYPICAL DETAILS SEE DRAWING H-2-117425.
2. FOR WALL LOCATION PLAN AND DRAWING REFERENCE SEE DRAWING H-2-117939 SH 1.

0 1 2 3 4 5 10 15 20
GRAPHIC SCALE
1/4" = 1'-0"

QUALITY LEVEL 1
SAFETY CLASS 1

FOR CLARIFICATIONS TO BID SCOPE
REFER TO DRAWINGS H-2-117427,
H-2-117428, AND H-2-117429.

DWG. NO.	DRAWING TITLE
H-2-117426	TUNNEL CONFIG PLAN & DWG INDEX
REFERENCE DRAWINGS	
NEXT USED ON	

REV NO.	DATE	REVISION DESCRIPTION	APPROVAL INITIALS
0	11/12/92	APPROVED FOR CONSTRUCTION OF BASE MAT ONLY	GM CHK RPE

CADFILE B117985B CADCODE 2B:IBM:ACD2:10.C2:SS

ENGINEERING RELEASE
REV. _____ DATE _____
ERO. _____

	SIGNATURE	DATE
PROJ. DIR.		
Q.A. MGR.		
INDEPENDENT SAFETY MGR.		
PROJECT MGR.		
SYSTEMS MGR.		
ENGINEERING MGR.		
SUPERVISOR		11/9/92
DESIGN ENGINEER	M. Kendall	11/11/92
CHECKED	M. Bezalles	11/11/92
DRAWN	R. MCDOWELL	08/27/92

U.S.DEPARTMENT OF ENERGY
Richland Field Office
DE - AC06-86RL10838
NOV 13 1992

FLUOR DANIEL, INC.
ADVANCED TECHNOLOGY DIVISION

STRUCTURAL
VIT BLDG
WALL ELEVATIONS

PROJECT TITLE: HANFORD WASTE VITRIFICATION PLANT

PROJECT	FLUOR CONTRACT NO.	CWBS NO.
B-595	8457	B210A
SCALE: 1/4" = 1'-0"	BLDG. NO. 1	INDEX NO.

CLASSIFICATION	BY	DRAWING NUMBER	SHEET	OF	REV.
NONE	NOT REQ'D	H-2-117985	2	2	0

2 10A H-2-117985 0 2 2 A F C

DISTRIBUTION CODE: 103 S183 ACAD INITIALS: V.K. DATE: 11/06/92

Rev #6 17:34:28 1992 V:\CAD1 F:\FLOPSY\VA17213.PLT

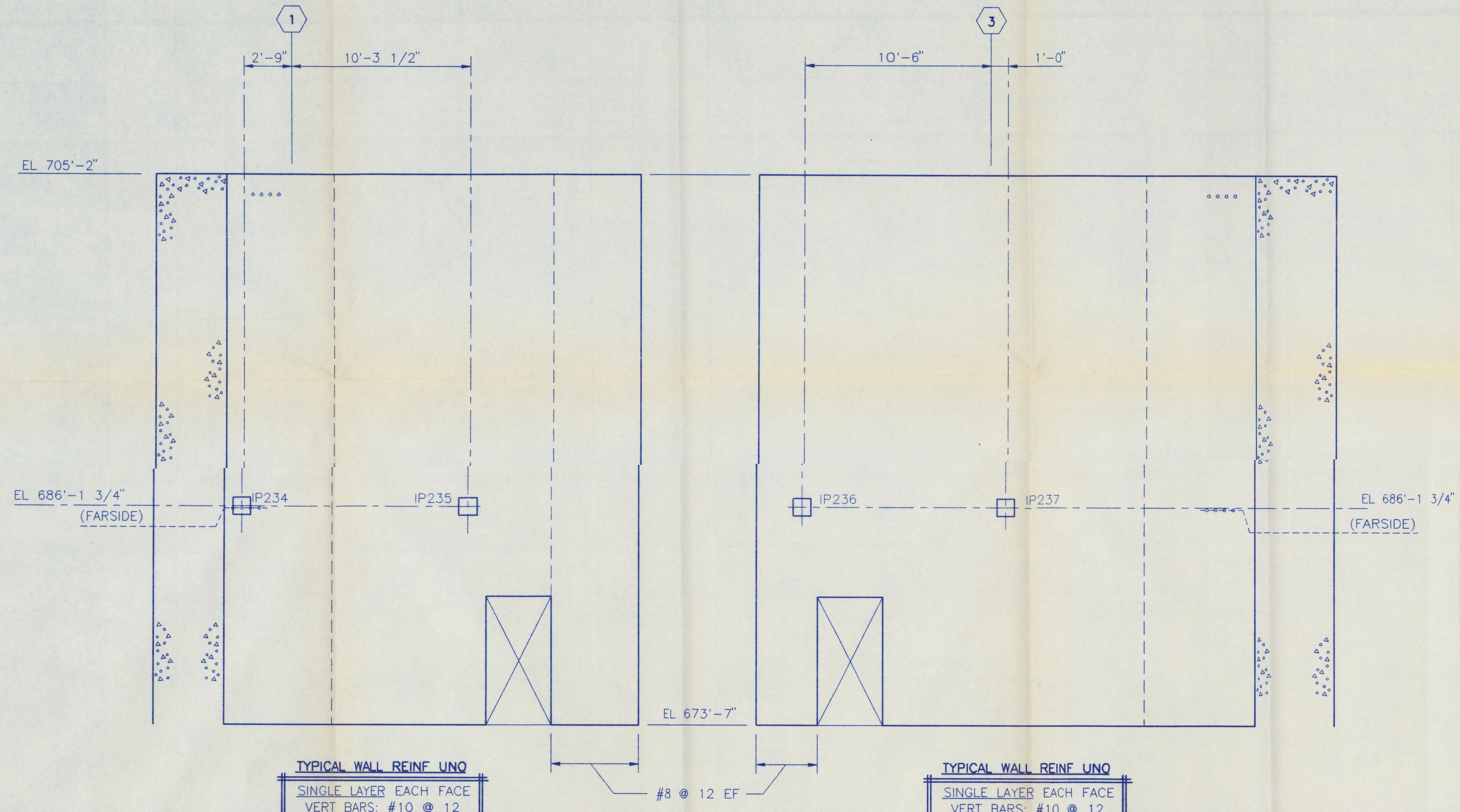

TYPICAL WALL REINF UNO
SINGLE LAYER EACH FACE
VERT BARS: #10 @ 12
HORIZ BARS: #10 @ 12

0096W1 WALL ELEVATION
LOOKING WEST

TYPICAL WALL REINF UNO
SINGLE LAYER EACH FACE
VERT BARS: #10 @ 12
HORIZ BARS: #10 @ 12

0097W1 WALL ELEVATION
LOOKING WEST

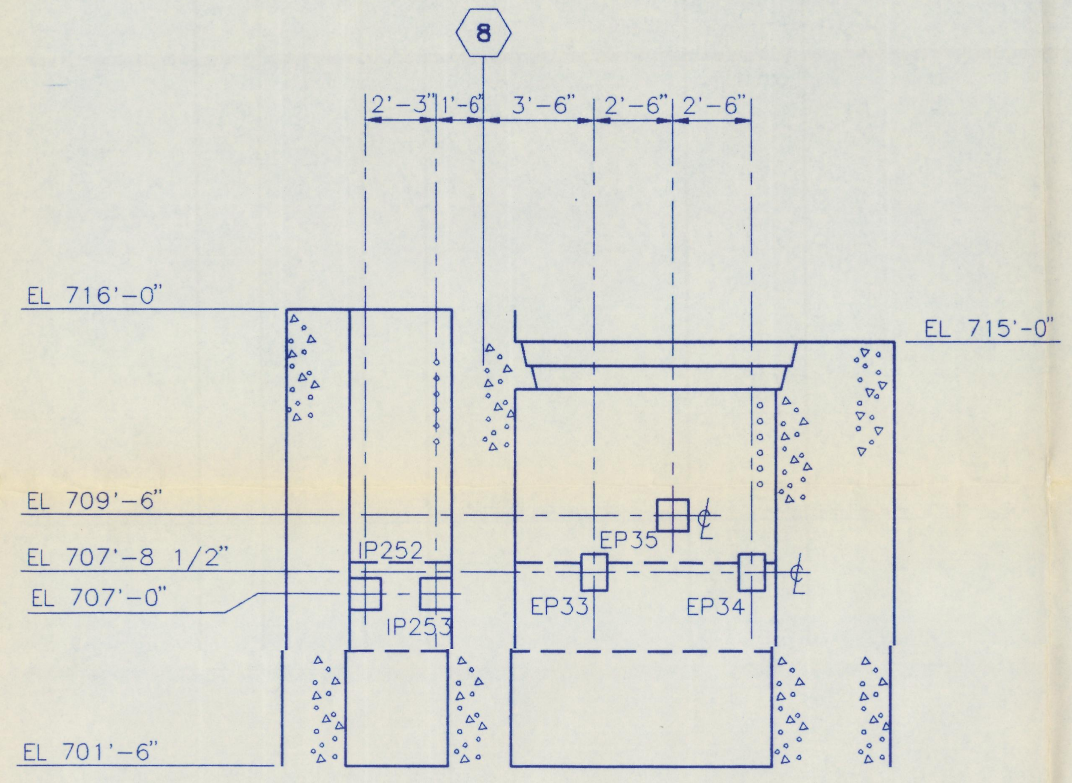

TYPICAL WALL REINF UNO
SINGLE LAYER EACH FACE
VERT BARS: #9 @ 6
HORIZ BARS: #9 @ 6

0040W1 WALL ELEVATION
LOOKING WEST

NOTES:

1. FOR GENERAL NOTES AND TYPICAL DETAILS SEE DRAWING H-2-117425.
2. FOR WALL LOCATION PLAN AND DRAWING REFERENCE SEE DRAWING H-2-117939 SHEET 1.

0 1 2 3 4 5 10 15 20
GRAPHIC SCALE
1/4" = 1'-0"

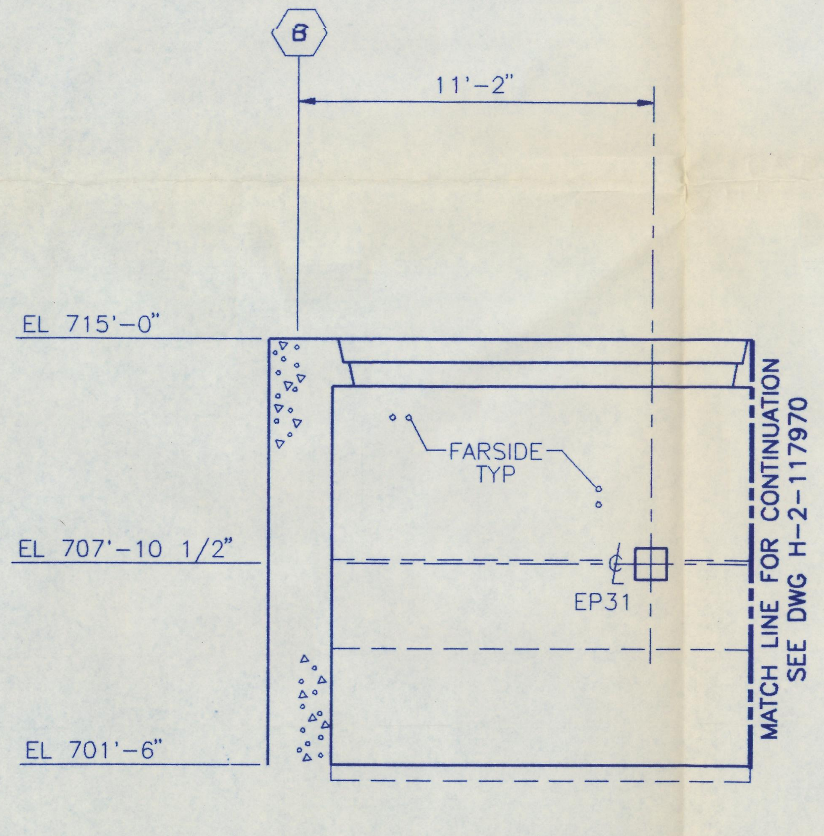

TYPICAL WALL REINF UNO
SINGLE LAYER EACH FACE
VERT BARS: #9 @ 12
HORIZ BARS: #9 @ 9

0040W2 WALL ELEVATION
LOOKING NORTH

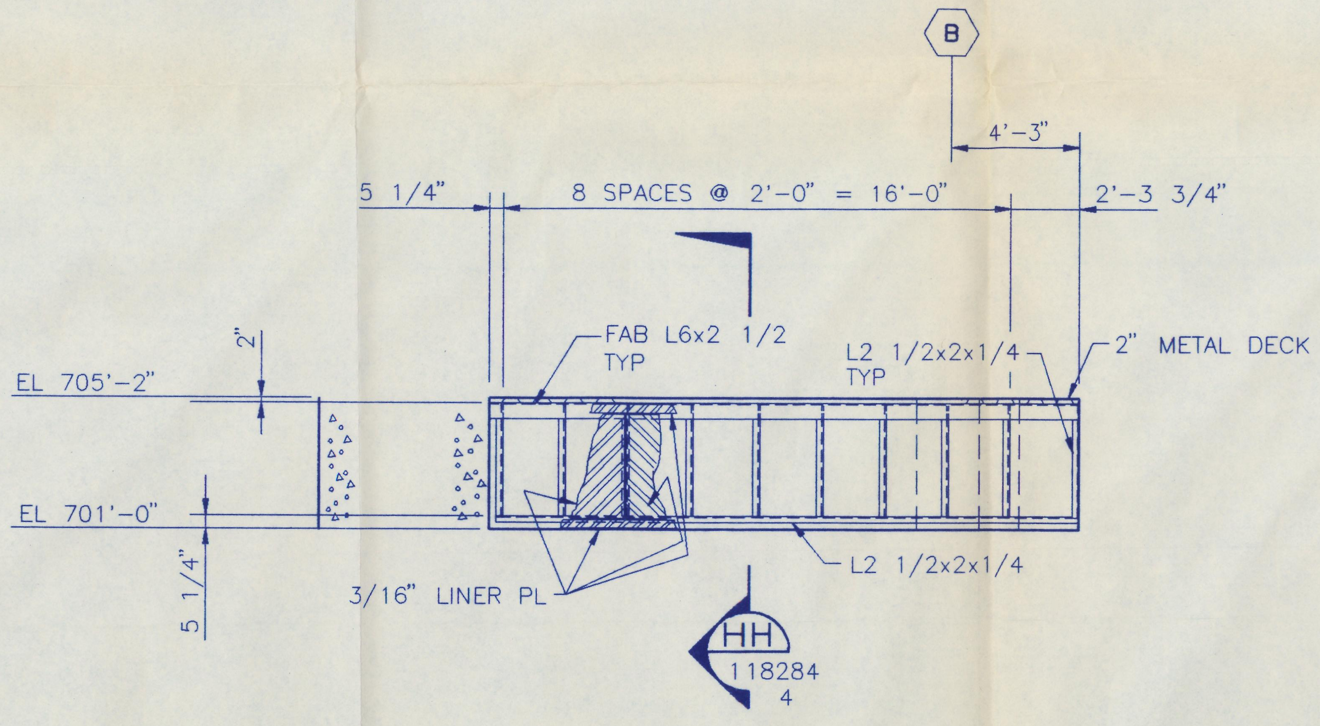

0040W2 WALL ELEVATION
LOOKING SOUTH

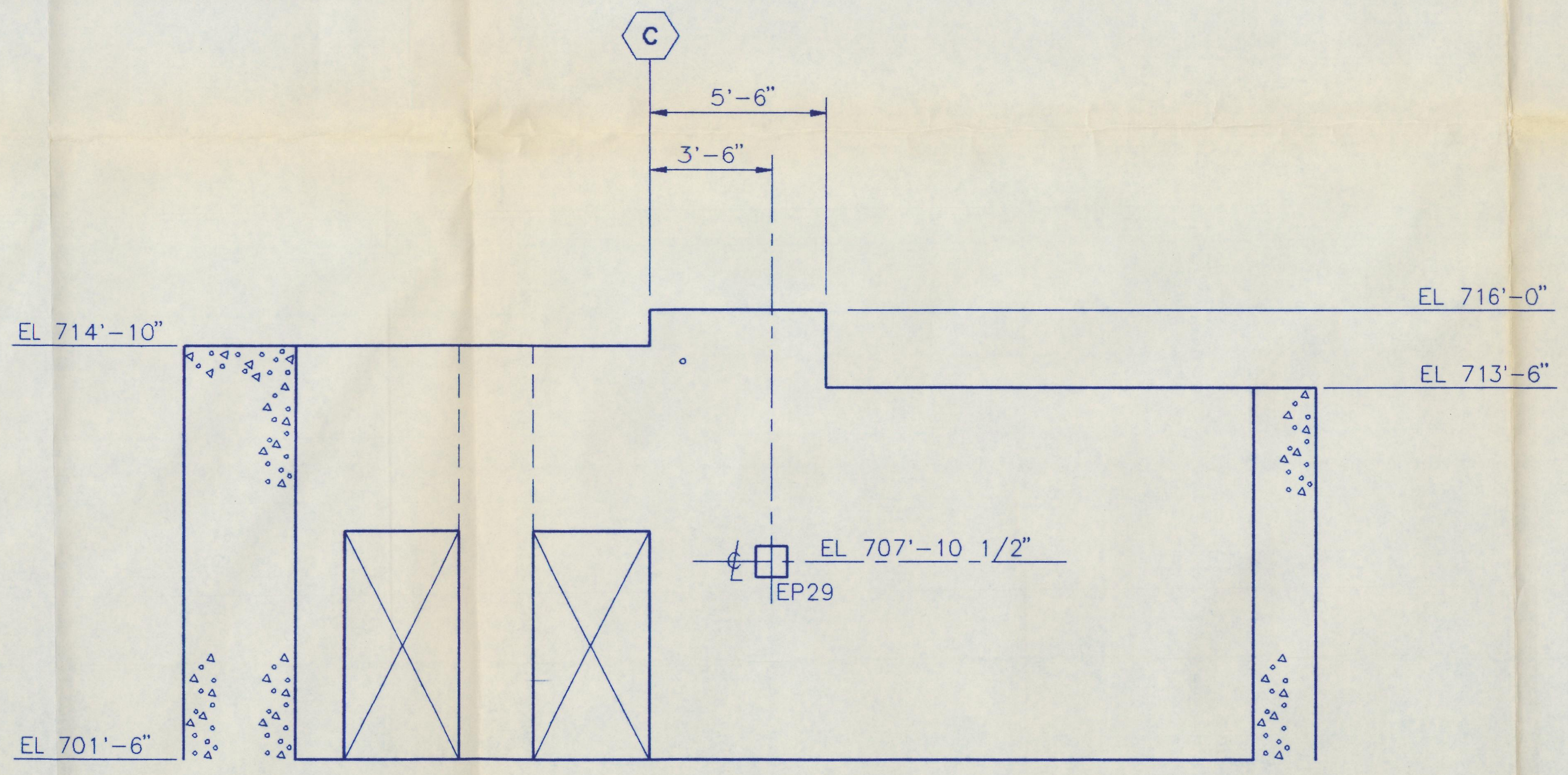

TYPICAL WALL REINF UNO
SINGLE LAYER EACH FACE
VERT BARS: #9 @ 12
HORIZ BARS: #9 @ 9

0040W3 WALL ELEVATION
LOOKING SOUTH

FOR CLARIFICATIONS TO BID SCOPE REFER TO DRAWINGS H-2-117427, H-2-117428, AND H-2-117429.

QUALITY LEVEL I
SAFETY CLASS 1

REV NO.	DATE	REVISION DESCRIPTION	APPROVAL INITIALS
0	11/12/92	APPROVED FOR CONSTRUCTION OF BASE MAT ONLY	[illegible]

DWG. NO.	DRAWING TITLE
H-2-117426	TUNNEL CONFIG PLAN & DWG INDEX

REFERENCE DRAWINGS
NEXT USED ON

CADFILE B117986A — CADCODE 2B:IBM:ACD2:10.C2:SS
ENGINEERING RELEASE
REV. ____ DATE ____
ERO. ____

U.S. DEPARTMENT OF ENERGY
Richland Field Office
DE - AC06-86RL10838
NOV 13 1992

FLUOR DANIEL, INC.
ADVANCED TECHNOLOGY DIVISION

STRUCTURAL
VIT BLDG
WALL ELEVATIONS

PROJECT TITLE: HANFORD WASTE VITRIFICATION PLANT
PROJECT: B-595 — FLUOR CONTRACT NO.: 8457 — CWBS NO.: B210A
DRAWN: V. KOLDRE 03/25/92 — SCALE: 1/4" = 1'-0" — BLDG. NO.: 1
CLASSIFICATION: NONE — BY: NOT REQ'D
DRAWING NUMBER: H-2-117986 — SHEET 1 OF 1 — REV. 0

DISTRIBUTION CODE: 103
S114 ACAD
INITIALS: V.K.
DATE: 11/06/92

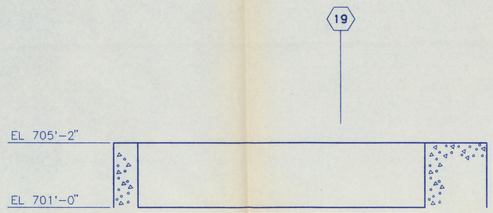

TYPICAL WALL REINF UNO
SINGLE LAYER EACH FACE
VERT BARS: #6 @ 9
HORIZ BARS: #6 @ 9

0061W1 WALL ELEVATION
LOOKING WEST

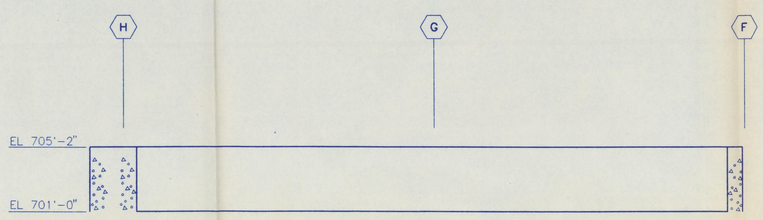

TYPICAL WALL REINF UNO
SINGLE LAYER EACH FACE
VERT BARS: #7 @ 12
HORIZ BARS: #7 @ 12

0061W2 WALL ELEVATION
LOOKING SOUTH

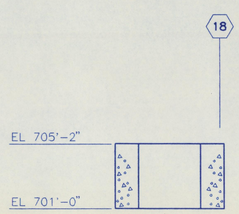

TYPICAL WALL REINF UNO
DOUBLE LAYER EACH FACE
VERT BARS: #10 @ 6
HORIZ BARS: #11 @ 6

0061W3 WALL ELEVATION
LOOKING EAST

NOTES:

1. FOR GENERAL NOTES AND TYPICAL DETAILS SEE DRAWING H-2-117425 SHEET 1.
2. FOR WALL LOCATION PLAN AND DRAWING REFERENCE SEE DRAWING H-2-117939 SH 1 AND SH 2.

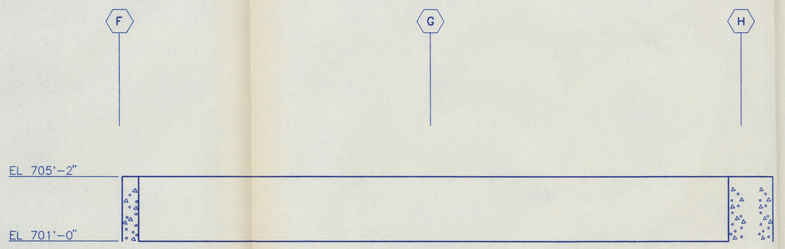

TYPICAL WALL REINF UNO
SINGLE LAYER EACH FACE
VERT BARS: #7 @ 12
HORIZ BARS: #7 @ 12

0061W4 WALL ELEVATION
LOOKING NORTH

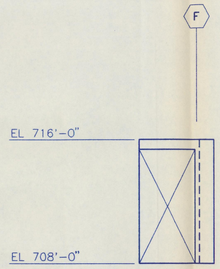

TYPICAL WALL REINF UNO
SINGLE LAYER EACH FACE
VERT BARS: #6 @ 9
HORIZ BARS: #6 @ 9

0095W3 WALL ELEVATION
LOOKING NORTH

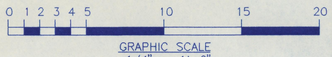

GRAPHIC SCALE
1/4" = 1'-0"

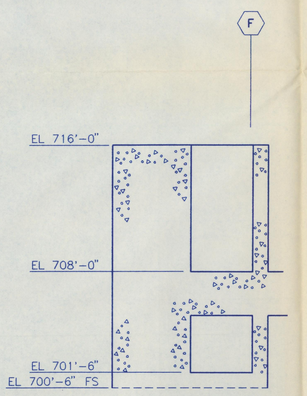

TYPICAL WALL REINF UNO
SINGLE LAYER EACH FACE
VERT BARS: #6 @ 9
HORIZ BARS: #6 @ 9

0095W1 WALL ELEVATION
LOOKING NORTH

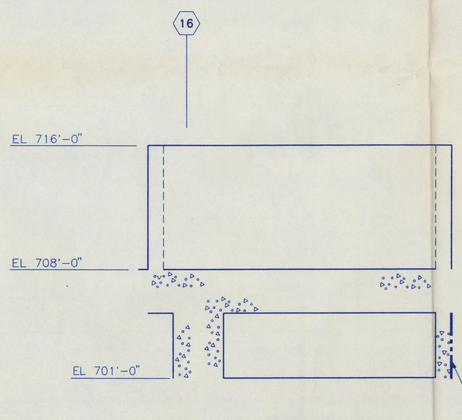

TYPICAL WALL REINF UNO
SINGLE LAYER EACH FACE
VERT BARS: #6 @ 9
HORIZ BARS: #6 @ 9

0095W2 WALL ELEVATION
LOOKING WEST

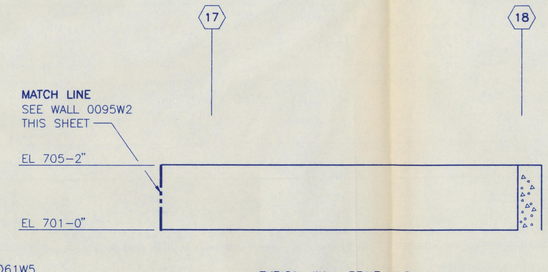

TYPICAL WALL REINF UNO
SINGLE LAYER EACH FACE
VERT BARS: #6 @ 9
HORIZ BARS: #6 @ 9

0061W5 WALL ELEVATION
LOOKING WEST

FOR CLARIFICATIONS TO BID SCOPE REFER TO DRAWINGS H-2-117427, H-2-117428, AND H-2-117429.

DWG. NO.	DRAWING TITLE
H-2-117460	FIRST FLOOR CONFIG PLAN & DWG INDEX
H-2-117426	TUNNEL CONFIG PLAN & DWG INDEX

REFERENCE DRAWINGS

NEXT USED ON

QUALITY LEVEL 1
SAFETY CLASS 1

REV NO.	DATE	REVISION DESCRIPTION	APPROVAL INITIALS
0	11/6/92	APPROVED FOR CONSTRUCTION OF BASE MAT ONLY	

CADFILE B117987A | CADCODE 2B:IBM:ACD2:10.C2:SS

ENGINEERING RELEASE
REV. _____ DATE _____
ERO. _____

	SIGNATURE	DATE
PROJ. DIR.		
O.A. MGR.		
INDEPENDENT SAFETY MGR.		
PROJECT MGR.		
SYSTEMS MGR.		
ENGINEERING MGR.		
SUPERVISOR		9/4/92
DESIGN ENGINEER		9/14/92
CHECKED		11/4/92
DRAWN	A. IZURIETA	03/23/92

U.S. DEPARTMENT OF ENERGY
Richland Field Office
DE - AC06-86RL10838
NOV 13 1992

FLUOR DANIEL, INC.
ADVANCED TECHNOLOGY DIVISION

STRUCTURAL
VIT BLDG
WALL ELEVATIONS

PROJECT TITLE: HANFORD WASTE VITRIFICATION PLANT

PROJECT	FLUOR CONTRACT NO.	CWBS NO.
B-595	8457	B210A

SCALE	BLDG. NO.	INDEX NO.
1/4" = 1'-0"	1	

CLASSIFICATION	BY	DRAWING NUMBER	SHEET	OF	REV.
NONE	NOT REQ'D	H-2-117987	1	1	0

DISTRIBUTION CODE: 103

S115 ACAD

INITIALS: REM
DATE: 11/06/92

FI Nov 06 17:48:23 1992 V:\ADI F:\VLOI\SVA\17216.PLT

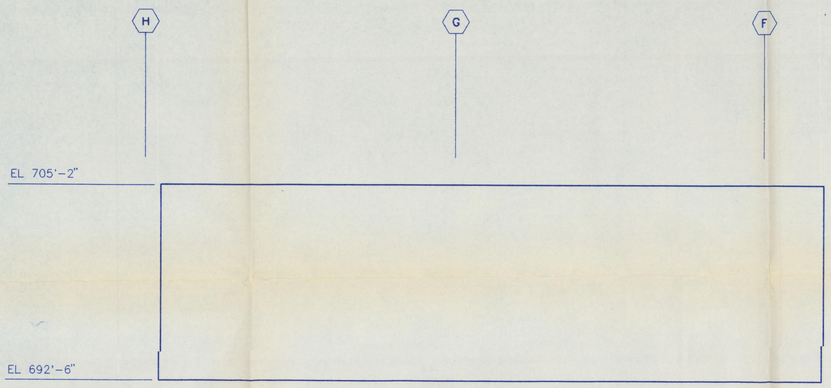

TYPICAL WALL REINF UNO
SINGLE LAYER EACH FACE
VERT BARS: #11 @ 6
HORIZ BARS: #11 @ 6

0009W1 WALL ELEVATION
LOOKING SOUTH

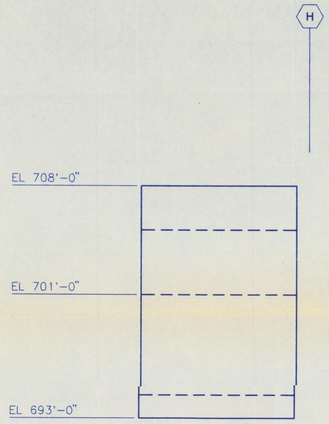

TYPICAL WALL REINF UNO
SINGLE LAYER EACH FACE
VERT BARS: #10 @ 9
HORIZ BARS: #10 @ 6

0015W2 WALL ELEVATION
LOOKING NORTH

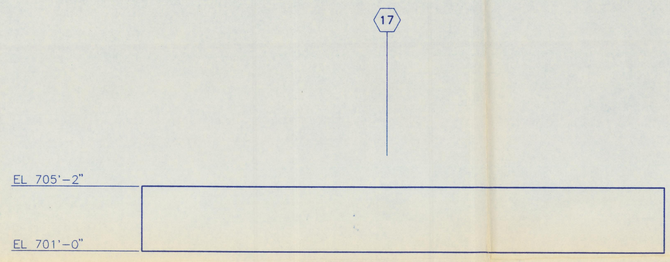

TYPICAL WALL REINF UNO
SINGLE LAYER EACH FACE
VERT BARS: #9 @ 9
HORIZ BARS: #9 @ 12

0070W1 WALL ELEVATION
LOOKING EAST

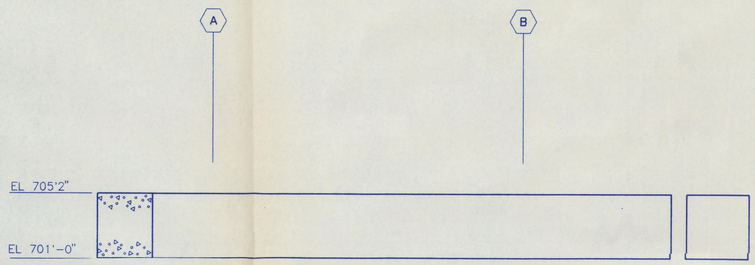

TYPICAL WALL REINF UNO
DOUBLE LAYER EACH FACE
VERT BARS: #11 @ 6
HORIZ BARS: #11 @ 6

0057W2 WALL ELEVATION
LOOKING NORTH

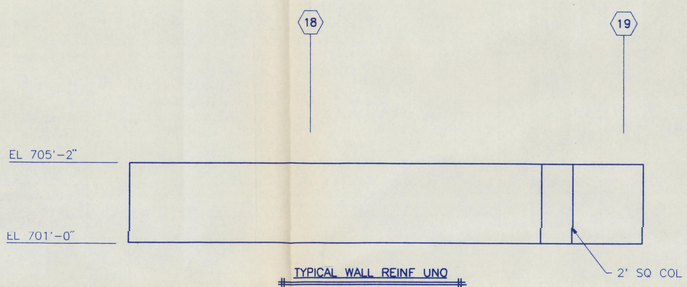

TYPICAL WALL REINF UNO
SINGLE LAYER EACH FACE
VERT BARS: #9 @ 9
HORIZ BARS: #9 @ 12

0057W3 WALL ELEVATION
LOOKING WEST

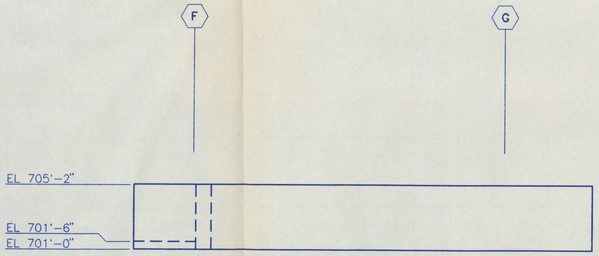

TYPICAL WALL REINF UNO
SINGLE LAYER EACH FACE
VERT BARS: #10 @ 9
HORIZ BARS: #10 @ 6

0002W1 WALL ELEVATION
LOOKING NORTH

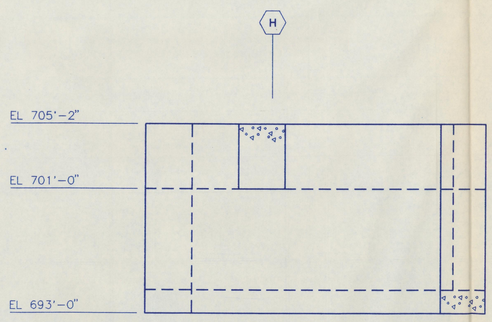

TYPICAL WALL REINF UNO
DOUBLE LAYER EACH FACE
VERT BARS: #10 @ 6
HORIZ BARS: #11 @ 6

0002W3 WALL ELEVATION
LOOKING SOUTH

NOTES:

1. FOR GENERAL NOTES AND TYPICAL DETAILS SEE DRAWING H-2-117425.
2. FOR WALL LOCATION PLAN AND DWG REFERENCE SEE DRAWING H-2-117939 SH 1.

GRAPHIC SCALE
1/4" = 1'-0"

FOR CLARIFICATIONS TO BID SCOPE REFER TO DRAWINGS H-2-117427, H-2-117428, AND H-2-117429.

QUALITY LEVEL 1
SAFETY CLASS 1

DWG. NO.	DRAWING TITLE
H-2-117426	TUNNEL CONFIG PLAN & DWG INDEX
REFERENCE DRAWINGS	
NEXT USED ON	

REV NO.	DATE	REVISION DESCRIPTION	APPROVAL INITIALS
0	11/12/92	APPROVED FOR CONSTRUCTION OF BASE MAT ONLY	

CADFILE B117988A | CADCODE 2B:IBM:ACD2:10.C2:SS

ENGINEERING RELEASE
REV. _____ DATE _____
ERO. _____

	SIGNATURE	DATE
PROJ. DIR.		
G.A. MGR.		
INDEPENDENT SAFETY MGR.		
PROJECT MGR.		
SYSTEMS MGR.		
ENGINEERING MGR.		
SUPERVISOR		11/11/92
DESIGN ENGINEER		11/11/92
CHECKED	M Revilles	11/11/92
DRAWN	A LIZURIETA	03/25/92
CLASSIFICATION	NONE	BY NOT REQ'D

U.S. DEPARTMENT OF ENERGY
Richland Field Office
DE - AC06-86RL10838
NOV 13 1992
FLUOR DANIEL, INC.
ADVANCED TECHNOLOGY DIVISION

STRUCTURAL
VIT BLDG
WALL ELEVATIONS

PROJECT TITLE: HANFORD WASTE VITRIFICATION PLANT

PROJECT	FLUOR CONTRACT NO.	CWBS NO.
B-595	8457	B210A

SCALE	BLDG. NO.	INDEX NO.
1/4" = 1'-0"	1	

DRAWING NUMBER: H-2-117988 | SHEET 1 | OF 1 | REV. 0

DISTRIBUTION CODE: 103 S116 ACAD
INITIALS: REM
DATE: 11/06/92

F1 No= #8 13742627 1992 V CAD1 F:\PLOTS\WA17216.PLT

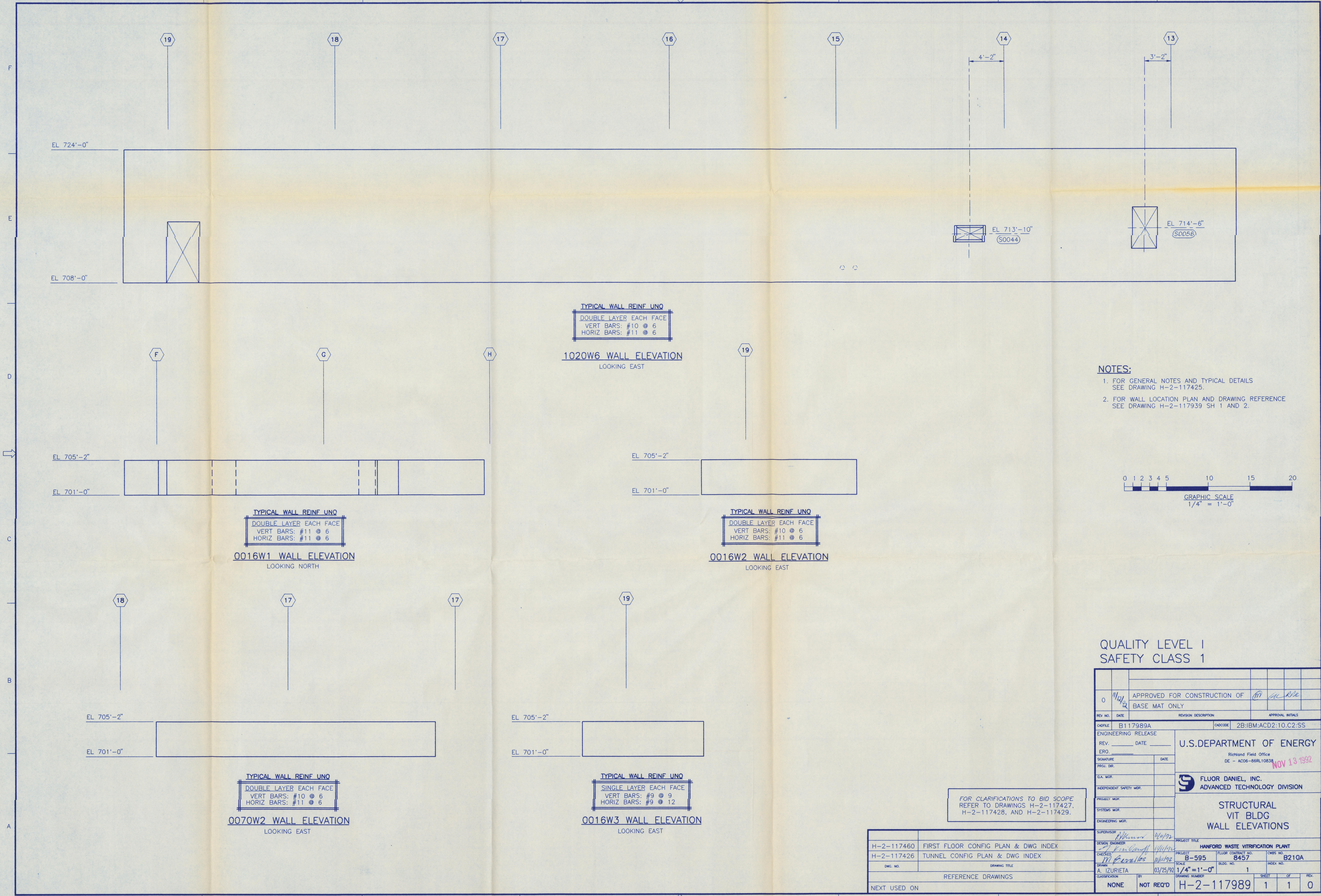

NOTES:

1. FOR GENERAL NOTES AND TYPICAL DETAILS SEE DRAWING H-2-117425.
2. FOR WALL LOCATION PLAN AND DRAWING REFERENCE SEE DRAWING H-2-117939 SH 1 AND 2.

QUALITY LEVEL I
SAFETY CLASS 1

FOR CLARIFICATIONS TO BID SCOPE REFER TO DRAWINGS H-2-117427, H-2-117428, AND H-2-117429.

DWG. NO.	DRAWING TITLE
H-2-117460	FIRST FLOOR CONFIG PLAN & DWG INDEX
H-2-117426	TUNNEL CONFIG PLAN & DWG INDEX

REFERENCE DRAWINGS

NEXT USED ON

REV NO.	DATE	REVISION DESCRIPTION	APPROVAL INITIALS
0	11/12/92	APPROVED FOR CONSTRUCTION OF BASE MAT ONLY	[signatures]

CADFILE B117989A CADCODE 2B:IBM:ACD2:10.C2:SS

ENGINEERING RELEASE REV. ____ DATE ____ ERO. ____

SIGNATURE		DATE
PROJ. DIR.		
Q.A. MGR.		
INDEPENDENT SAFETY MGR.		
PROJECT MGR.		
SYSTEMS MGR.		
ENGINEERING MGR.		
SUPERVISOR	[signature]	11/11/92
DESIGN ENGINEER	[signature]	11/11/92
CHECKED	M Cevallos	11/11/92
DRAWN	A. IZURIETA	03/25/92

U.S.DEPARTMENT OF ENERGY
Richland Field Office
DE - AC06-86RL10838
NOV 13 1992

FLUOR DANIEL, INC.
ADVANCED TECHNOLOGY DIVISION

STRUCTURAL
VIT BLDG
WALL ELEVATIONS

PROJECT TITLE: HANFORD WASTE VITRIFICATION PLANT

PROJECT: B-595 FLUOR CONTRACT NO.: 8457 CWBS NO.: B210A
SCALE: 1/4" = 1'-0" BLDG. NO.: 1 INDEX NO.:

CLASSIFICATION: NONE BY: NOT REQ'D DRAWING NUMBER: H-2-117989 SHEET: 1 OF: 1 REV.: 0

H-2-117989 0 1 1 AFC

DISTRIBUTION CODE: 103 **S117** ACAD INITIALS: REM DATE: 11/06/92

r1 Nov 06 17:44:33 1992 V CAD1 P:\PLOTS\VA117217.PLT

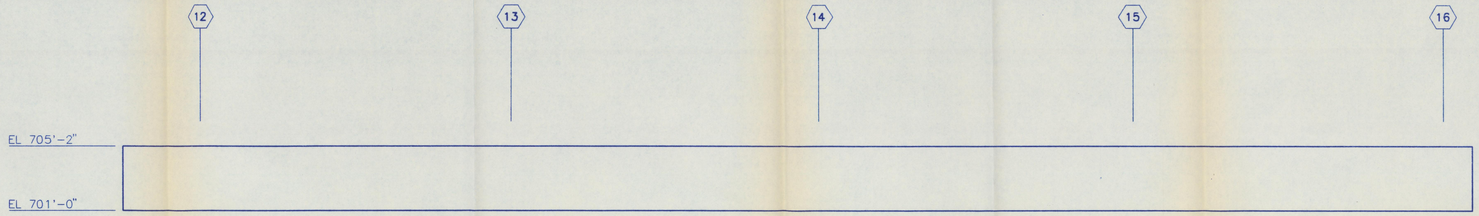

0046W3 WALL ELEVATION
LOOKING WEST

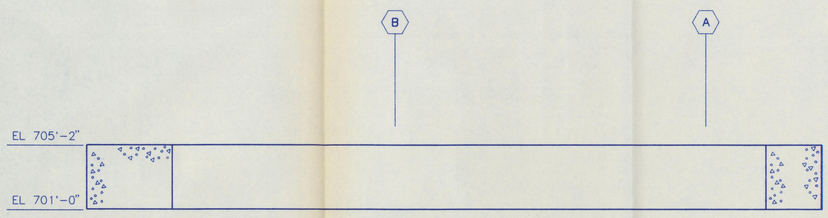

TYPICAL WALL REINF UNO
SINGLE LAYER EACH FACE
VERT BARS: #10 @ 9
HORIZ BARS: #9 @ 6

0046W2 WALL ELEVATION
LOOKING SOUTH

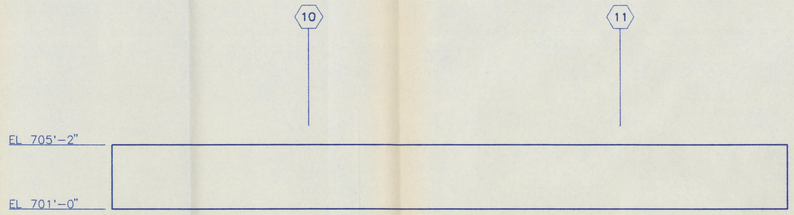

0046W4 WALL ELEVATION
LOOKING WEST

NOTES:

1. FOR GENERAL NOTES AND TYPICAL DETAILS SEE DRAWING H-2-117425.
2. FOR WALL LOCATION PLAN & DRAWING REFERENCE SEE DRAWING H-2-117939 SHEET 1.

TYPICAL WALL REINF UNO
SINGLE LAYER EACH FACE
VERT BARS: #9 @ 9
HORIZ BARS: #9 @ 12

GRAPHIC SCALE
1/4" = 1'-0"

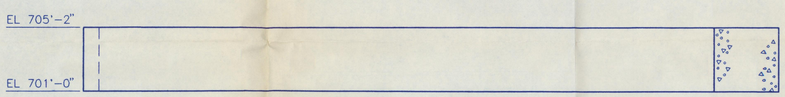

WALL REINF
SINGLE LAYER EACH FACE
VERT BARS: #6 @ 9
HORIZ BARS: #6 @ 9

0056W1 WALL ELEVATION
LOOKING WEST

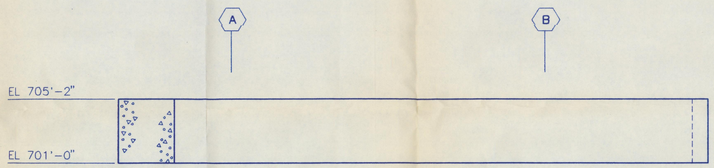

WALL REINF
SINGLE LAYER EACH FACE
VERT BARS: #6 @ 9
HORIZ BARS: #6 @ 9

0056W2 WALL ELEVATION
LOOKING NORTH

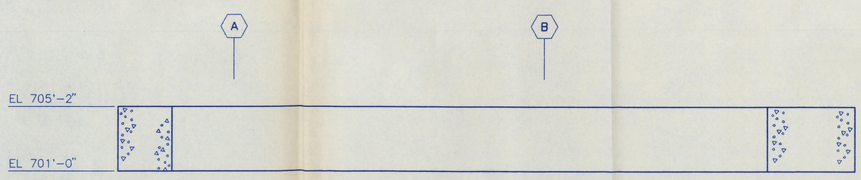

WALL REINF
SINGLE LAYER EACH FACE
VERT BARS: #6 @ 9
HORIZ BARS: #6 @ 9

0056W3 WALL ELEVATION
LOOKING NORTH

QUALITY LEVEL 1
SAFETY CLASS 1

FOR CLARIFICATIONS TO BID SCOPE REFER TO DRAWINGS H-2-117427, H-2-117428, AND H-2-117429.

DWG. NO.	DRAWING TITLE
H-2-117426	TUNNEL CONFIG PLAN & DWG INDEX

REFERENCE DRAWINGS

NEXT USED ON

REV NO.	DATE	REVISION DESCRIPTION	APPROVAL INITIALS
0	11/12/92	APPROVED FOR CONSTRUCTION OF BASE MAT ONLY	

CADFILE B117990A | CADCODE 2B:IBM:ACD2:10.C2:SS

ENGINEERING RELEASE
REV. ____ DATE ____
ERO. ____

SIGNATURE	DATE
PROJ. DIR.	
Q.A. MGR.	
INDEPENDENT SAFETY MGR.	
PROJECT MGR	
SYSTEMS MGR.	
ENGINEERING MGR.	
SUPERVISOR	11/11/92
DESIGN ENGINEER	
CHECKED	11/4/92
DRAWN A. IZURIETA	03/23/92

U.S.DEPARTMENT OF ENERGY
Richland Field Office
DE - AC06-86RL10838
NOV 13 1992

FLUOR DANIEL, INC.
ADVANCED TECHNOLOGY DIVISION

STRUCTURAL
VIT BLDG
WALL ELEVATIONS

PROJECT TITLE: HANFORD WASTE VITRIFICATION PLANT

PROJECT	FLUOR CONTRACT NO.	CWBS NO.
B-595	8457	B210A

SCALE	BLDG. NO.	INDEX NO.
1/4" = 1'-0"	1	

CLASSIFICATION	BY	DRAWING NUMBER	SHEET	OF	REV.
NONE	NOT REQ'D	H-2-117990	1	1	0

DISTRIBUTION CODE: 103 S118 ACAD

INITIALS: V.K.
DATE: 11/06/92

FI Nov 06 17:46:39 1992 V:\CAD\...\H2117990.PLT

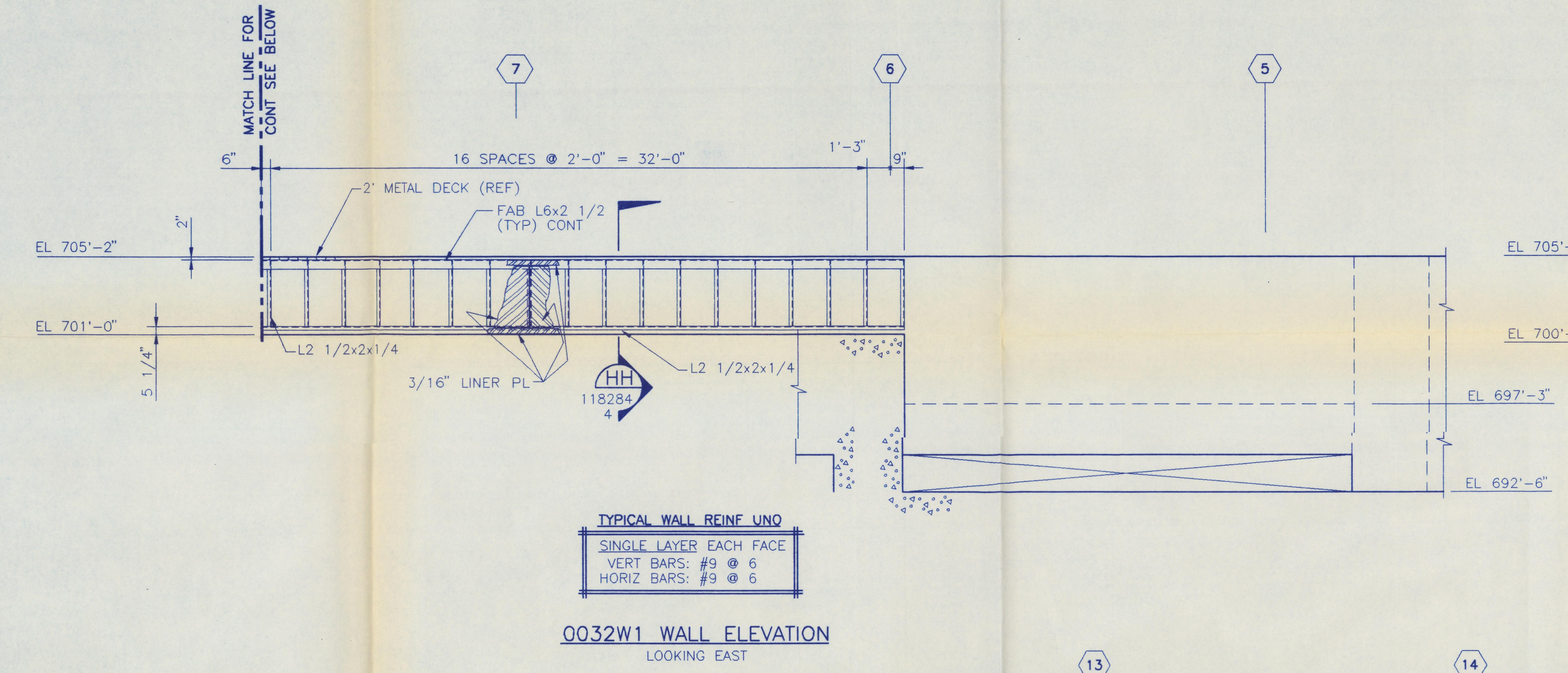

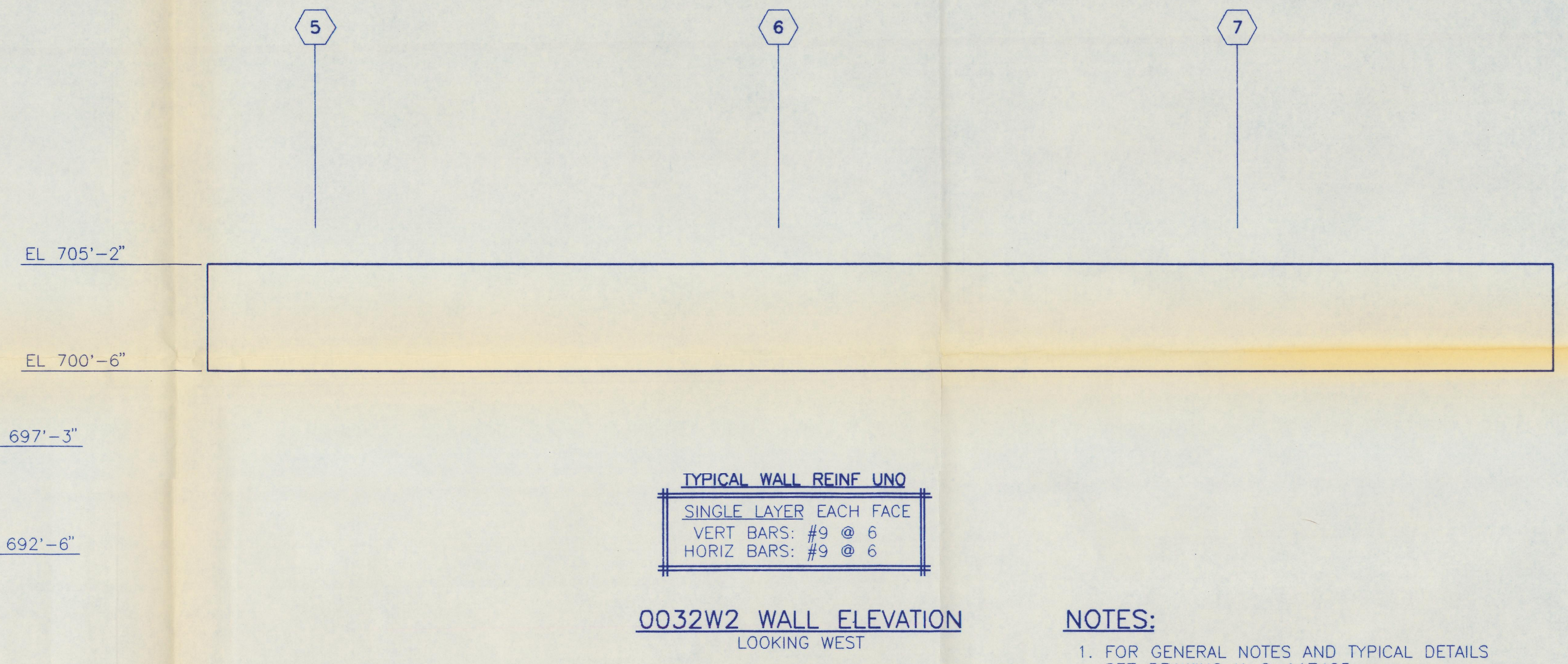

NOTES:

1. FOR GENERAL NOTES AND TYPICAL DETAILS SEE DRAWING H-2-117425.
2. FOR WALL LOCATION PLAN AND DRAWING REFERENCE SEE DRAWING H-2-117939 SH 1.

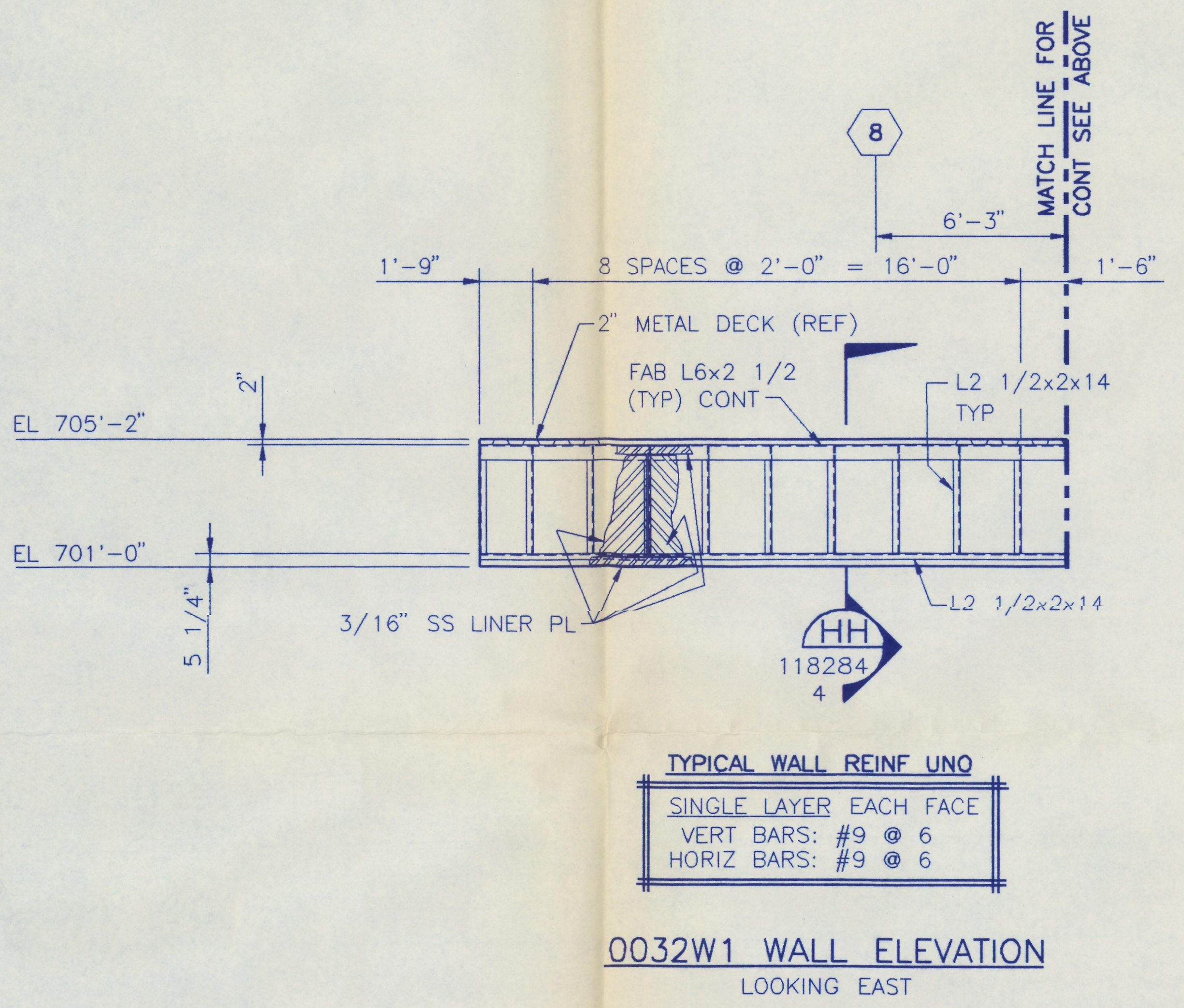

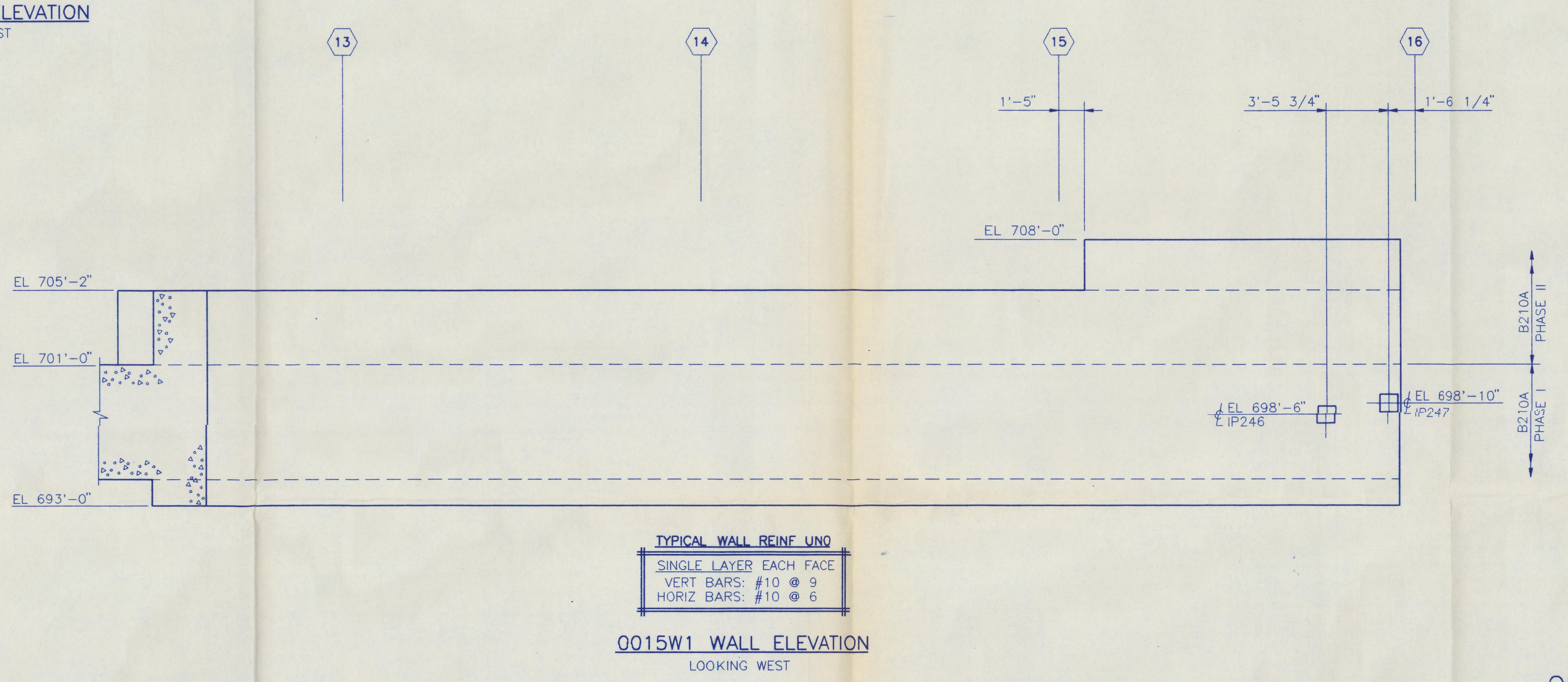

GRAPHIC SCALE 1/4" = 1'-0"

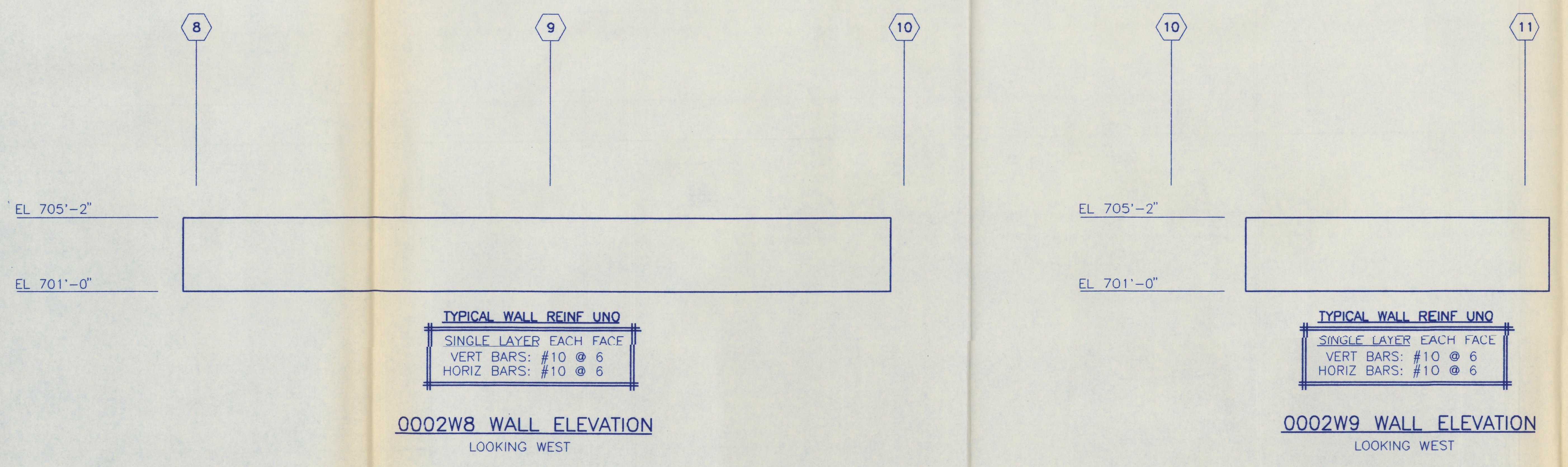

FOR CLARIFICATIONS TO BID SCOPE REFER TO DRAWINGS H-2-117427, H-2-117428, AND H-2-117429.

QUALITY LEVEL I
SAFETY CLASS 1

REV NO.	DATE	REVISION DESCRIPTION	APPROVAL INITIALS
0	11/13/92	APPROVED FOR CONSTRUCTION OF BASE MAT ONLY	a.k.

DWG. NO.	DRAWING TITLE
H-2-117426	TUNNEL CONFIG PLAN & DWG INDEX

REFERENCE DRAWINGS

NEXT USED ON

CADFILE B117991A — CADCODE 2B:IBM:ACD2:10.C2:SS

ENGINEERING RELEASE REV. ____ DATE ____ ERO. ____

U.S.DEPARTMENT OF ENERGY
Richland Field Office
DE - AC06-86RL10838
NOV 13 1992

FLUOR DANIEL, INC.
ADVANCED TECHNOLOGY DIVISION

STRUCTURAL
VIT BLDG
WALL ELEVATIONS

SIGNATURE		DATE
PROJ. DIR.		
Q.A. MGR.		
INDEPENDENT SAFETY MGR.		
PROJECT MGR.		
SYSTEMS MGR.		
ENGINEERING MGR.		
SUPERVISOR	RPKmeer	11/11/92
DESIGN ENGINEER		11/11/92
CHECKED	A. Keslla	11-11-92
DRAWN	R. MCDOWELL	07/13/92

PROJECT TITLE: HANFORD WASTE VITRIFICATION PLANT

PROJECT	FLUOR CONTRACT NO.	CWBS NO.
B-595	8457	B210A

SCALE	BLDG. NO.	INDEX NO.
1/4" = 1'-0"	1	

CLASSIFICATION	BY	DRAWING NUMBER	SHEET	OF	REV.
NONE	NOT REQ'D	H-2-117991	1	1	0

H-2-117991 0 1 1 AFC

DISTRIBUTION CODE: 103 S119 ACAD INITIALS: V.K. DATE: 11/06/92

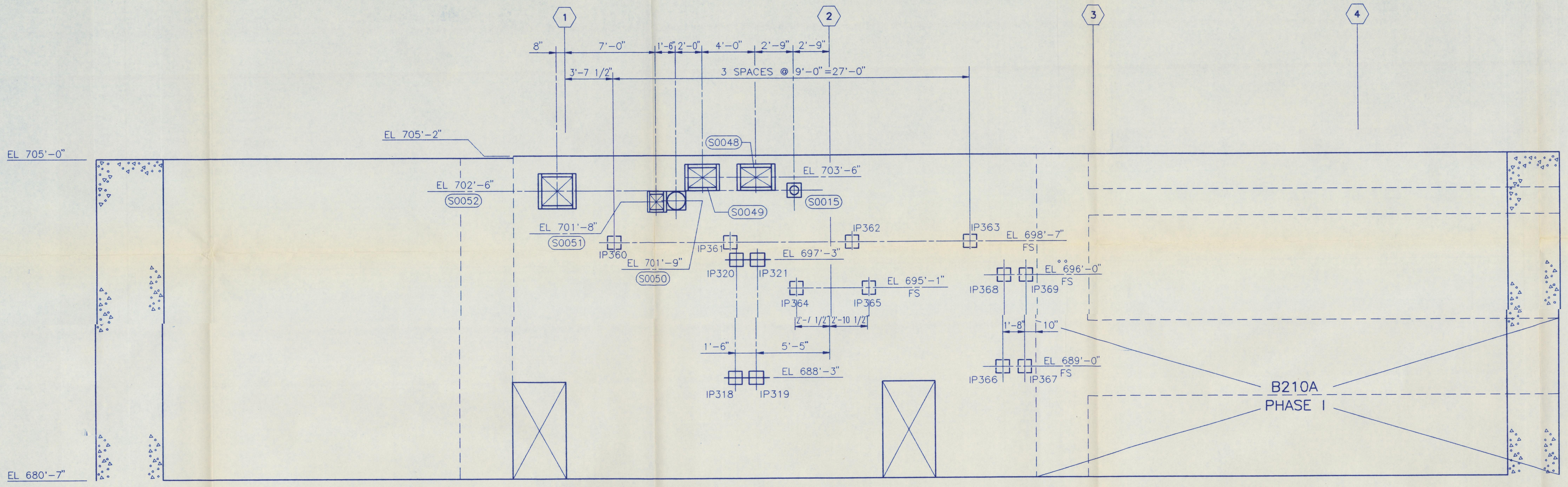

TYPICAL WALL REINF UNO

DOUBLE LAYER EACH FACE
VERT BARS: #10 @ 6
HORIZ BARS: #11 @ 6

0082W1 WALL ELEVATION

LOOKING WEST

NOTES:

1. FOR GENERAL NOTES AND TYPICAL DETAILS SEE DRAWING H-2-117425.
2. FOR WALL LOCATION PLAN AND DRAWING REFERENCE SEE DRAWING H-2-117939 SH 1.

0 1 2 3 4 5 10 15 20
GRAPHIC SCALE
1/4" = 1'-0"

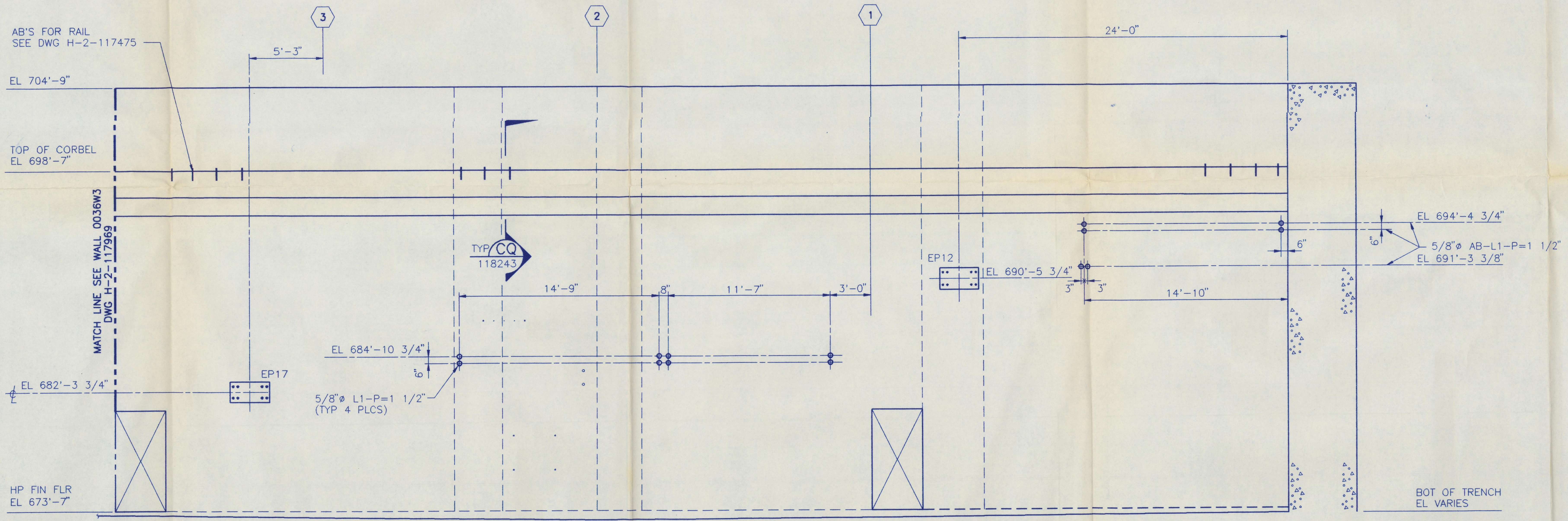

FOR CLARIFICATIONS TO BID SCOPE REFER TO DRAWINGS H-2-117427, H-2-117428, AND H-2-117429.

TYPICAL WALL REINF UNO

DOUBLE LAYER EACH FACE
VERT BARS: #11 @ 6
HORIZ BARS: #11 @ 6

0086W2 WALL ELEVATION

LOOKING EAST

DWG. NO.	DRAWING TITLE
H-2-117426	TUNNEL CONFIG PLAN & DWG INDEX

REFERENCE DRAWINGS

NEXT USED ON

QUALITY LEVEL I
SAFETY CLASS 1

REV NO.	DATE	REVISION DESCRIPTION	APPROVAL INITIALS
0	11/12/92	APPROVED FOR CONSTRUCTION OF BASE MAT ONLY	[illegible]

CADFILE B117992A CADCODE 2B:IBM:ACD2:10.C2:SS

ENGINEERING RELEASE
REV. ______ DATE ______
ERO. ______

SIGNATURE	DATE
PROJ. DIR.	
Q.A. MGR.	
INDEPENDENT SAFETY MGR.	
PROJECT MGR.	
SYSTEMS MGR.	
ENGINEERING MGR.	
SUPERVISOR R.P. Kumar	11/11/92
DESIGN ENGINEER [illegible]	11/11/92
CHECKED E. Agiaoili	11/11/92
DRAWN R. MCDOWELL	07/13/92

CLASSIFICATION: NONE BY: NOT REQ'D

U.S.DEPARTMENT OF ENERGY
Richland Field Office
DE – AC06-86RL10838

NOV 13 1992

FLUOR DANIEL, INC.
ADVANCED TECHNOLOGY DIVISION

STRUCTURAL
VIT BLDG
WALL ELEVATIONS

PROJECT TITLE: HANFORD WASTE VITRIFICATION PLANT

PROJECT	FLUOR CONTRACT NO.	CWBS NO.
B-595	8457	B210A
SCALE 1/4" = 1'-0"	BLDG. NO. 1	INDEX NO.

DRAWING NUMBER	SHEET	OF	REV.
H-2-117992	1	1	0

DISTRIBUTION CODE: 103 S120 ACAD INITIALS: A.I. DATE: 11/06/92

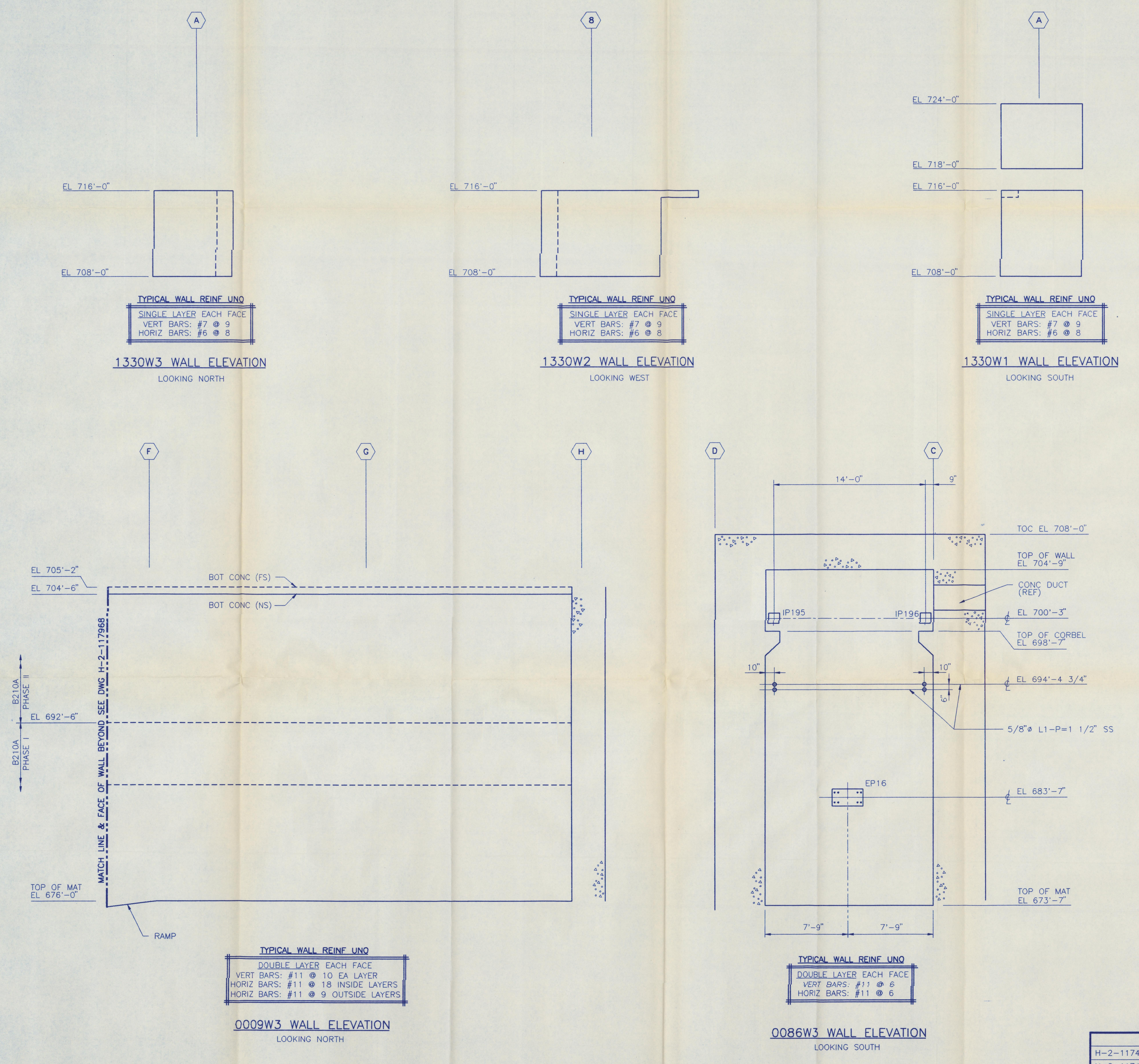

NOTES:

1. FOR GENERAL NOTES AND TYPICAL DETAILS SEE DRAWING H-2-117425.
2. FOR WALL LOCATION PLAN AND DRAWING REFERENCE SEE DRAWING H-2-117939 SH 1 AND 2.

GRAPHIC SCALE
1/4" = 1'-0"

QUALITY LEVEL I
SAFETY CLASS 1

FOR CLARIFICATIONS TO BID SCOPE REFER TO DRAWINGS H-2-117427, H-2-117428, AND H-2-117429.

REV. NO.	DATE	REVISION DESCRIPTION	APPROVAL INITIALS
0	11/12/92	APPROVED FOR CONSTRUCTION OF BASE MAT ONLY	

CADFILE B117993A — CADCODE 2B:IBM:ACD2:10.C2:SS

ENGINEERING RELEASE
REV. ______ DATE ______
ERO. ______

SIGNATURE	DATE
PROJ. DIR.	
Q.A. MGR.	
INDEPENDENT SAFETY MGR.	
PROJECT MGR.	
SYSTEMS MGR.	
ENGINEERING MGR.	
SUPERVISOR R.P. Kumar	11/11/92
DESIGN ENGINEER	11/11/92
CHECKED M. Bevallos	11/11/92
DRAWN S. TERRY	07/08/92

U.S.DEPARTMENT OF ENERGY
Richland Field Office
DE - AC06-86RL10838

NOV 13 1992

FLUOR DANIEL, INC.
ADVANCED TECHNOLOGY DIVISION

STRUCTURAL
VIT BLDG
WALL ELEVATIONS

PROJECT TITLE: HANFORD WASTE VITRIFICATION PLANT

PROJECT	FLUOR CONTRACT NO.	CWBS NO.
B-595	8457	B210A

SCALE	BLDG. NO.	INDEX NO.
1/4" = 1'-0"	1	

CLASSIFICATION	BY	DRAWING NUMBER	SHEET	OF	REV.
NONE	NOT REQD	H-2-117993	1	1	0

DWG. NO.	DRAWING TITLE
H-2-117460	FIRST FLOOR CONFIG PLAN & DWG INDEX
H-2-117426	TUNNEL CONFIG PLAN & DWG INDEX

REFERENCE DRAWINGS

NEXT USED ON

2 1 0 A H-2-117993 0 1 1 AFC

DISTRIBUTION CODE: 103 S121 ACAD INITIALS: A.I. DATE: 11/06/92

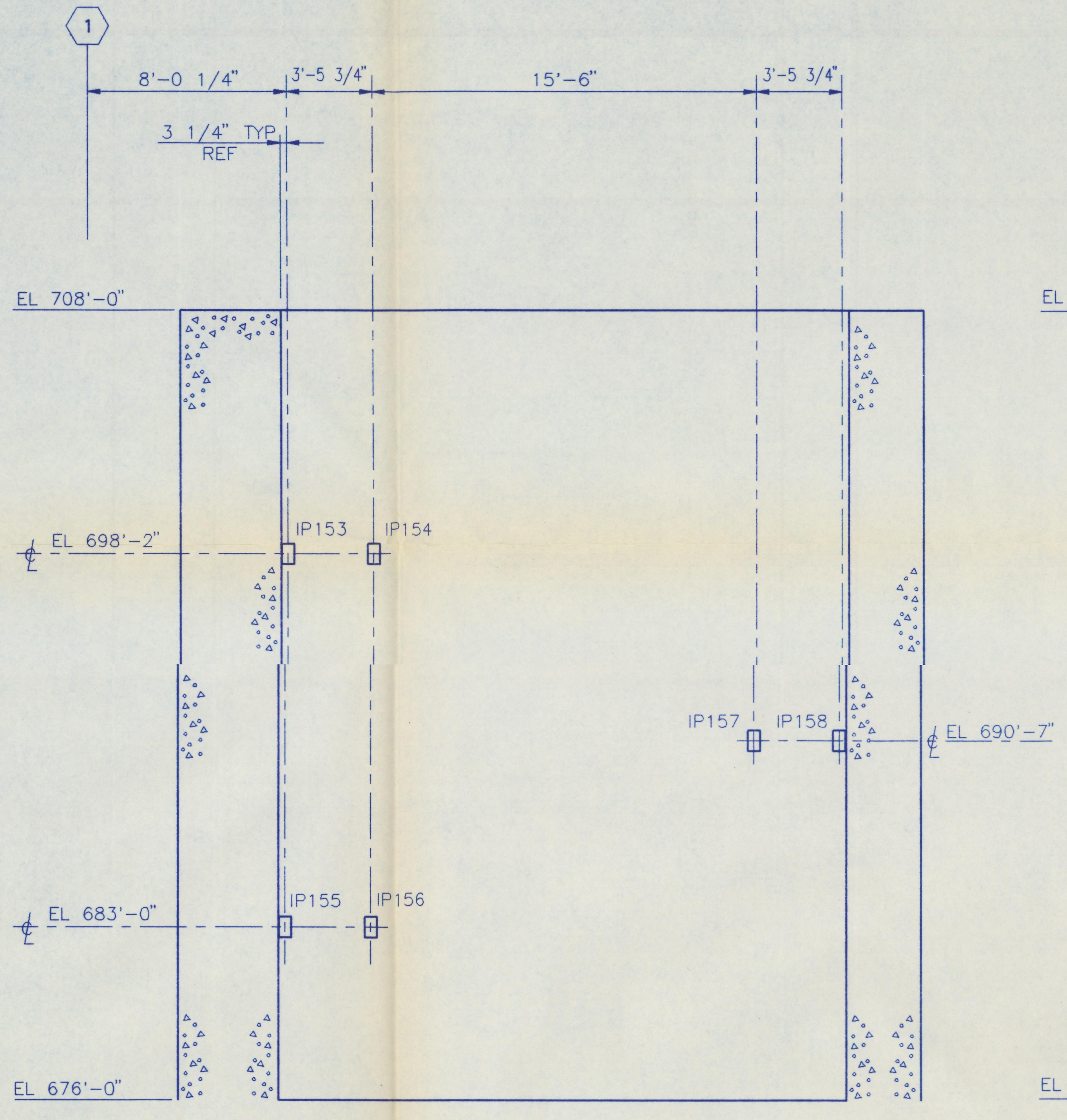

0126W1 WALL ELEVATION
LOOKING EAST

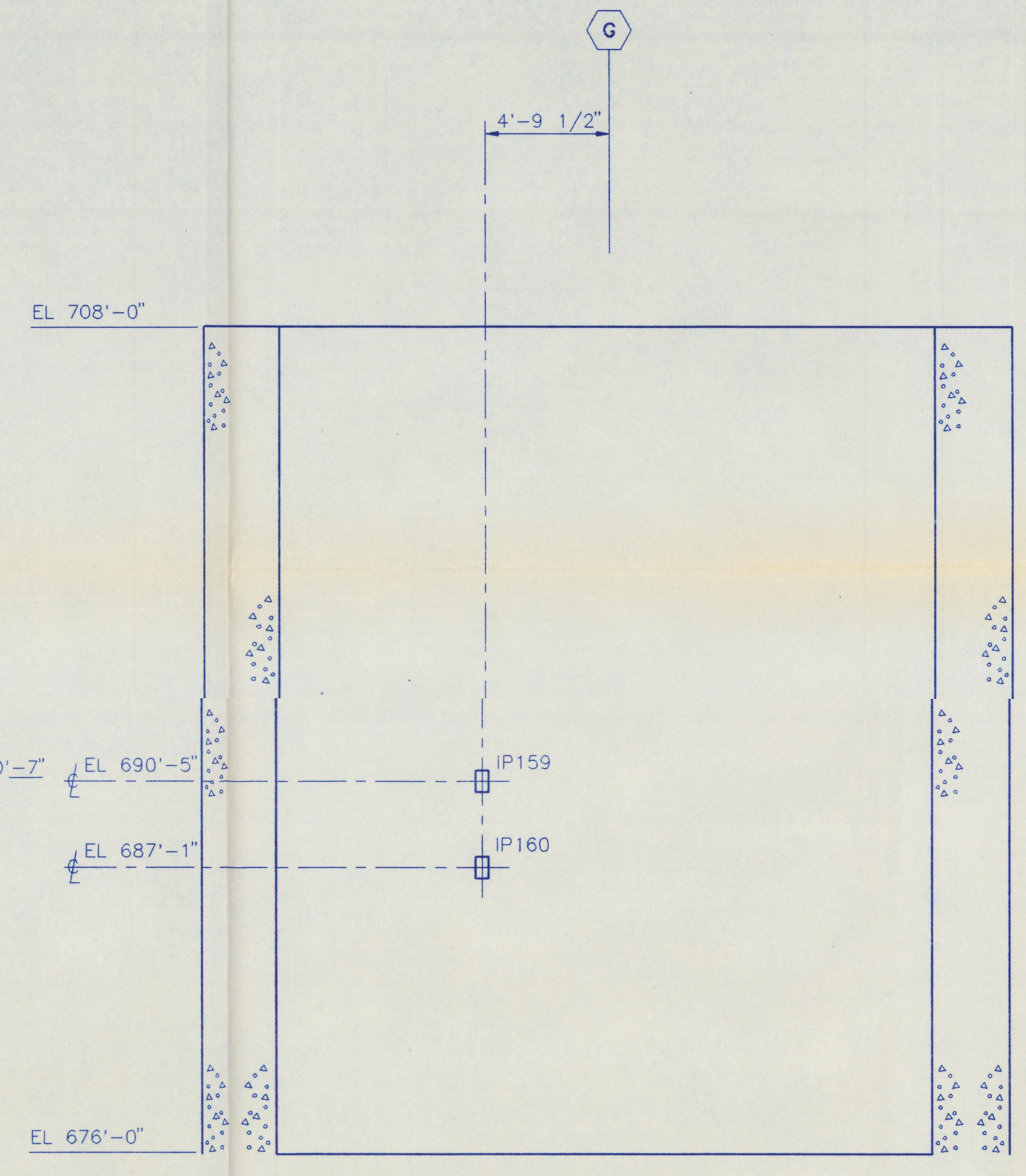

0126W2 WALL ELEVATION
LOOKING SOUTH

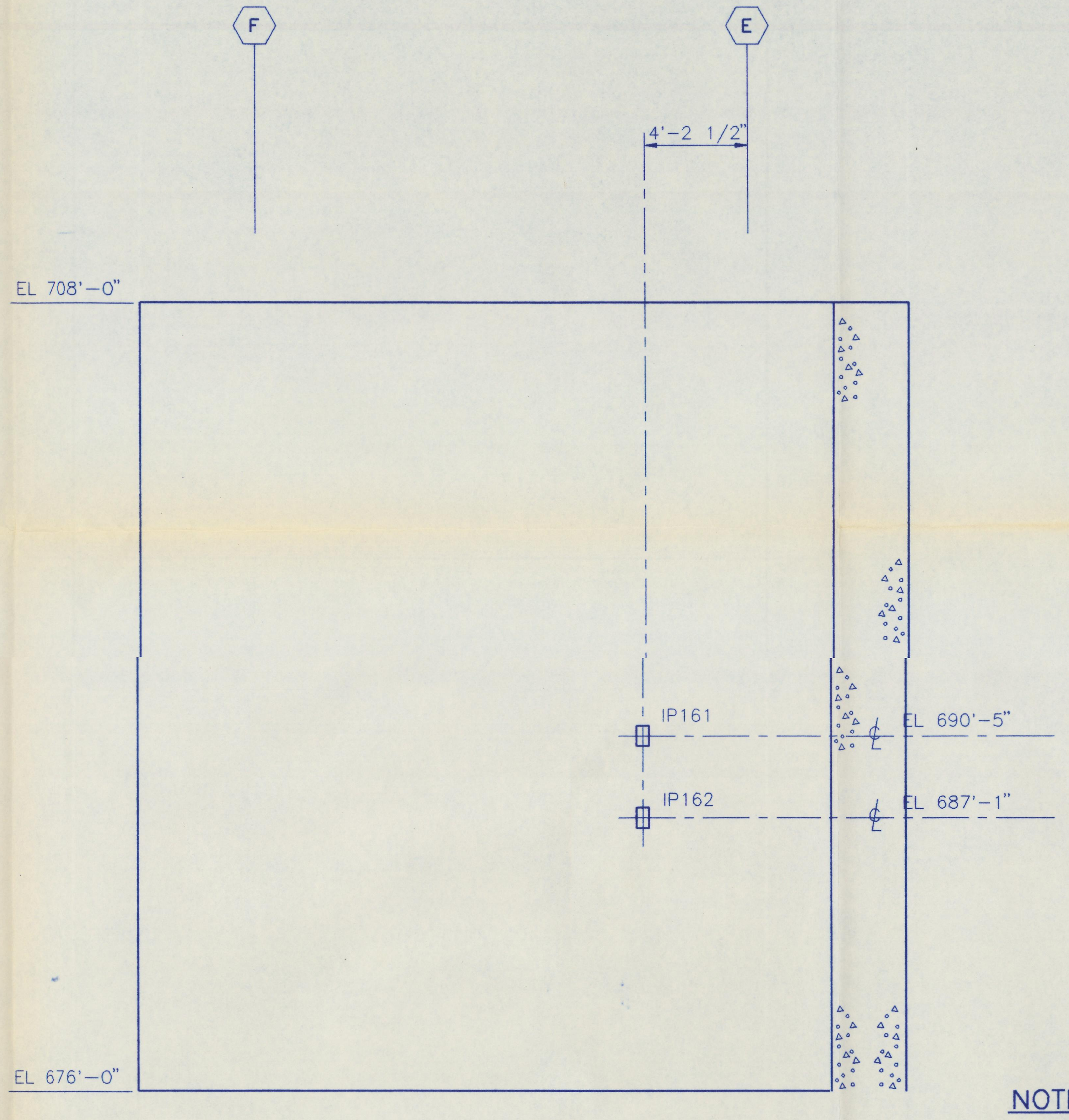

0125W2 WALL ELEVATION
LOOKING SOUTH

TYPICAL WALL REINF UNO

DOUBLE LAYER EACH FACE
VERT BARS: #10 @ 6
HORIZ BARS: #11 @ 6

NOTES:

1. FOR GENERAL NOTES AND TYPICAL DETAILS SEE DRAWING H-2-117425 SHEET 1.
2. FOR WALL LOCATION PLAN AND DWG REFERENCE SEE DRAWING H-2-117939 SH 1.

0 1 2 3 4 5 10 15 20
GRAPHIC SCALE
1/4" = 1'-0"

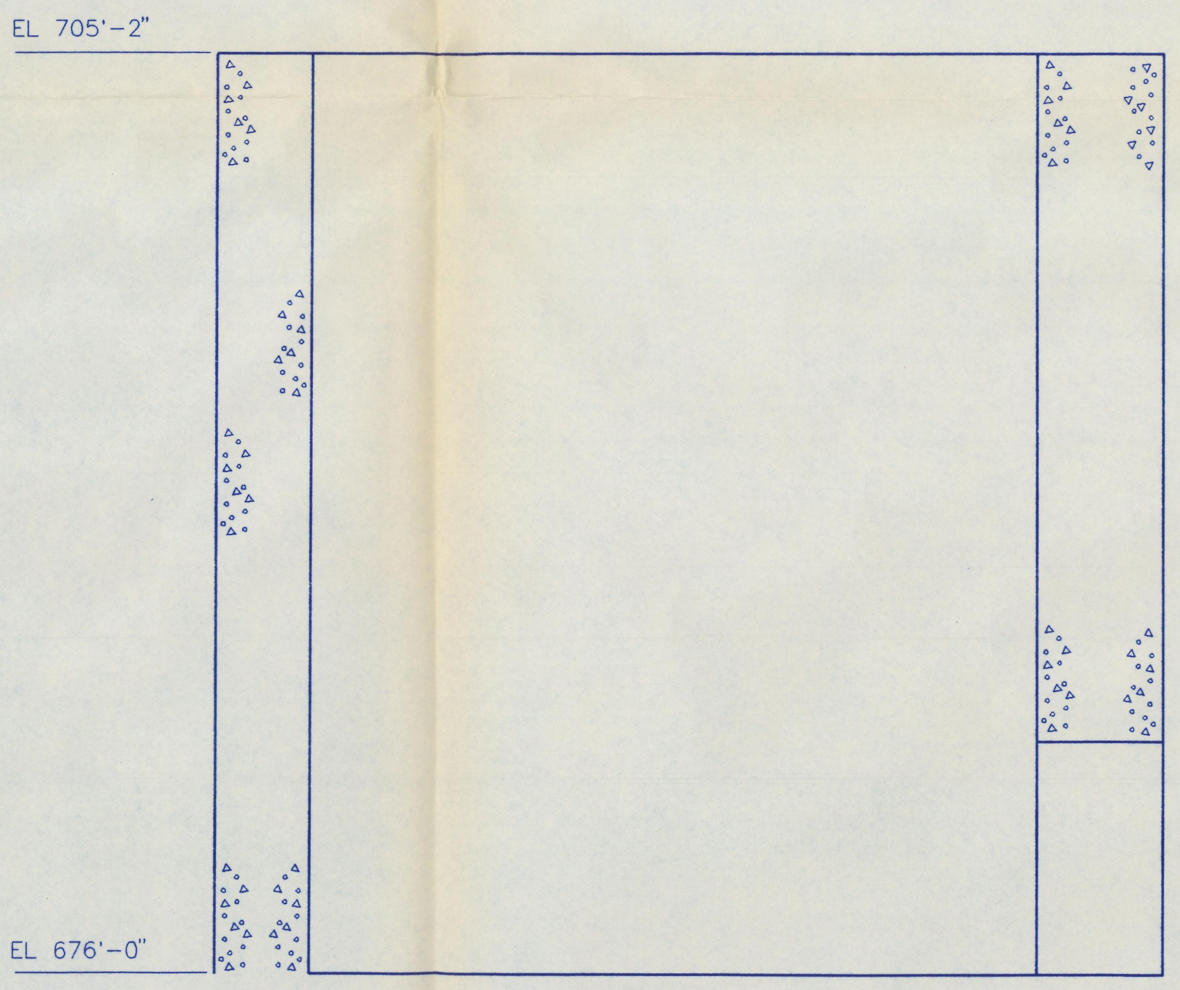

WALL REINF

SINGLE LAYER EACH FACE
VERT BARS #9 @ 9
HORIZ BARS #8 @ 9

0126W3 WALL ELEVATION
LOOKING WEST

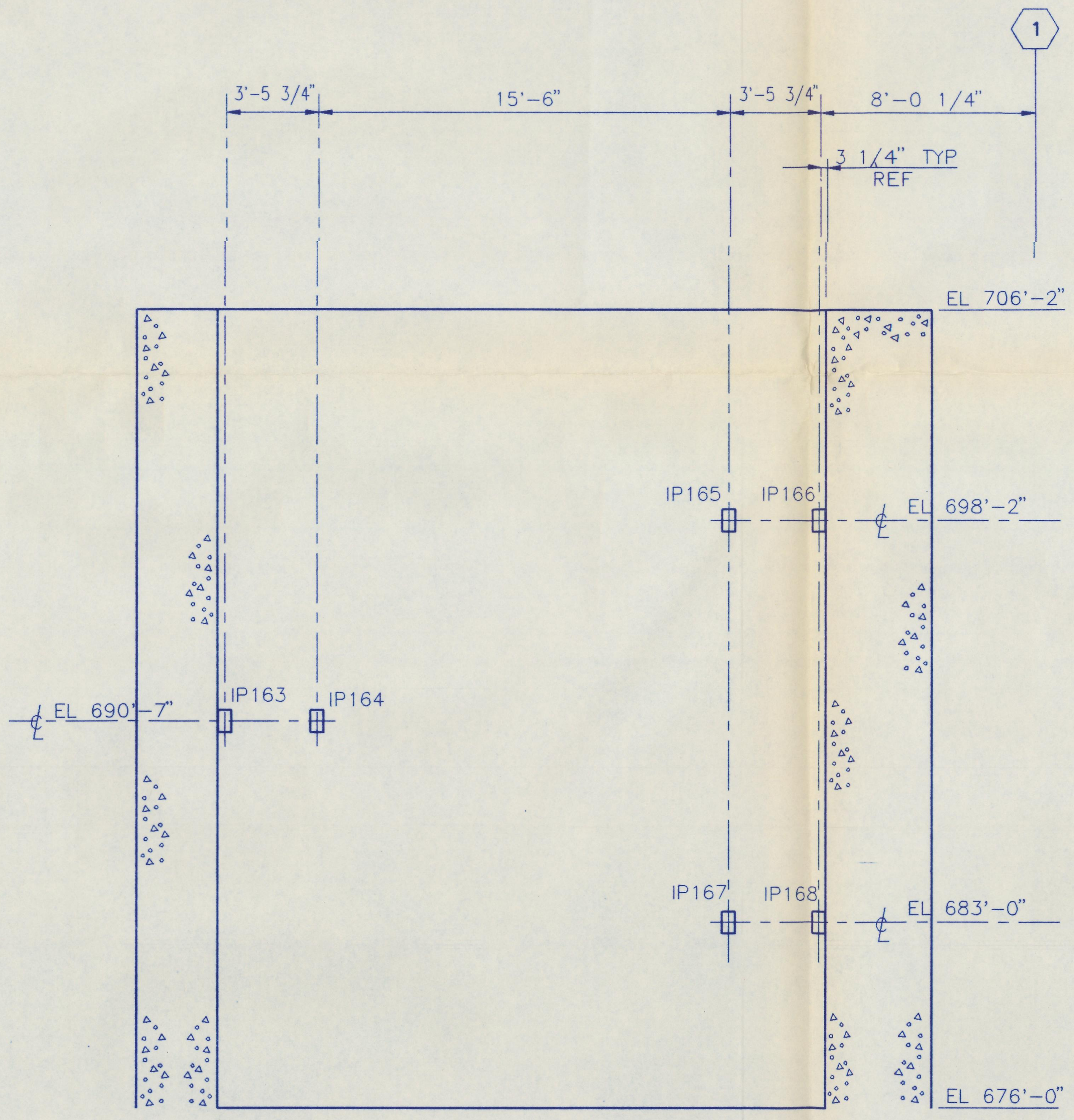

0125W1 WALL ELEVATION
LOOKING WEST

FOR CLARIFICATIONS TO BID SCOPE REFER TO DRAWINGS H-2-117427, H-2-117428, AND H-2-117429.

QUALITY LEVEL I
SAFETY CLASS 1

DWG. NO.	DRAWING TITLE
H-2-117425	STRUCTURAL, CONCRETE NOTES & TYPICAL DETAILS

REFERENCE DRAWINGS
NEXT USED ON

REV NO.	DATE	REVISION DESCRIPTION	APPROVAL INITIALS
0	11/12/92	APPROVED FOR CONSTRUCTION OF BASE MAT ONLY	[signatures]

CADFILE B117994A CADCODE 2B:IBM:ACD2:10.C2:SS

ENGINEERING RELEASE
REV. _______ DATE _______
ERO. _______

SIGNATURE		DATE
PROJ. DIR.		
Q.A. MGR.		
INDEPENDENT SAFETY MGR.		
PROJECT MGR.		
SYSTEMS MGR.		
ENGINEERING MGR.		
SUPERVISOR	[signature]	11/11/92
DESIGN ENGINEER	[signature]	11/11/92
CHECKED	E. Agcaoili	11/11/92
DRAWN	A. IZURIETA	03/23/92

U.S.DEPARTMENT OF ENERGY
Richland Field Office
DE - AC06-86RL10838

NOV 13 1992

FLUOR DANIEL, INC.
ADVANCED TECHNOLOGY DIVISION

STRUCTURAL
VIT BLDG
WALL ELEVATIONS

PROJECT TITLE: HANFORD WASTE VITRIFICATION PLANT

PROJECT	FLUOR CONTRACT NO.	CWBS NO.
B-595	8457	B210A

SCALE	BLDG. NO.	INDEX NO.
1/4" = 1'-0"	1	

CLASSIFICATION	BY	DRAWING NUMBER	SHEET	OF	REV.
NONE	NOT REQD	H-2-117994	1	1	0

2 1 0 A H-2-117994 0 1 1 A F C

DISTRIBUTION CODE: 103 S122 ACAD INITIALS: A.I. DATE: 11/06/92

1 Nov 06 18:09:38 1992 V CAD1 P:\PLOTS\VAA17222.PLT

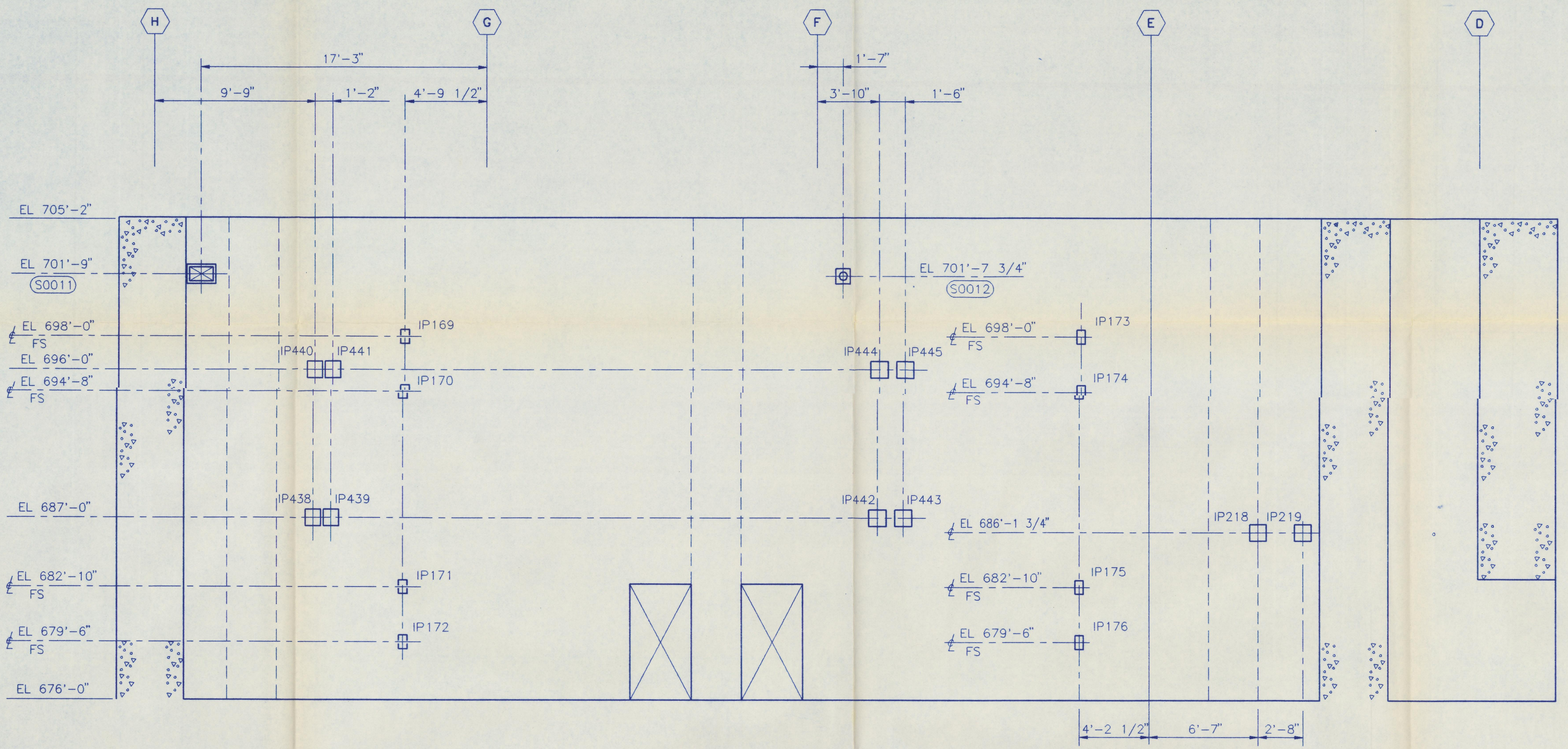

0012W1 WALL ELEVATION

LOOKING SOUTH

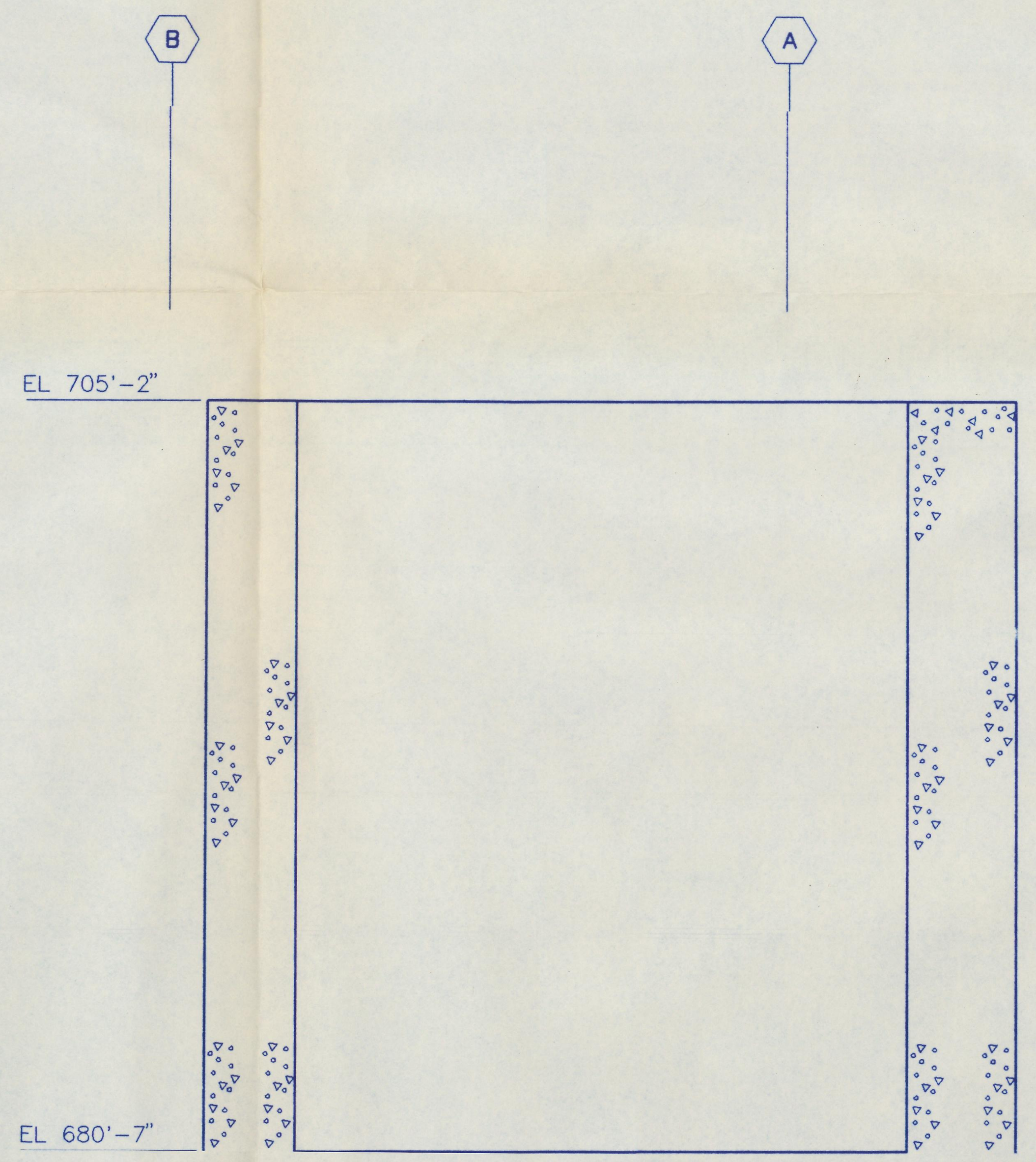

0013W3 WALL ELEVATION

LOOKING SOUTH

NOTES:

1. FOR GENERAL NOTES AND TYPICAL DETAILS SEE DRAWING H-2-117425.
2. FOR WALL LOCATION PLAN AND DRAWING REFERENCE SEE DRAWING H-2-117939 SH 1.

TYPICAL WALL REINF UNO

DOUBLE LAYER EACH FACE
VERT BARS: #11 @ 6
HORIZ BARS: #11 @ 6

0 1 2 3 4 5 10 15 20

GRAPHIC SCALE
1/4" = 1'-0"

FOR CLARIFICATIONS TO BID SCOPE REFER TO DRAWINGS H-2-117427, H-2-117428, AND H-2-117429.

QUALITY LEVEL I
SAFETY CLASS 1

DWG. NO.	DRAWING TITLE
H-2-117426	TUNNEL CONFIG PLAN & DWG INDEX

REFERENCE DRAWINGS

NEXT USED ON

REV NO.	DATE	REVISION DESCRIPTION	APPROVAL INITIALS
0	11/12/92	APPROVED FOR CONSTRUCTION OF BASE MAT ONLY	[signatures]

CADFILE B117995A CADCODE 2B:IBM:ACD2:10.C2:SS

ENGINEERING RELEASE
REV. ______ DATE ______
ERO. ______

SIGNATURE	DATE
PROJ. DIR.	
Q.A. MGR.	
INDEPENDENT SAFETY MGR.	
PROJECT MGR.	
SYSTEMS MGR.	
ENGINEERING MGR.	
SUPERVISOR [signature]	11/11/92
DESIGN ENGINEER [signature]	11/11/92
CHECKED E. Agcaoili	11/11/92
DRAWN A. IZURIETA	03/23/92

U.S.DEPARTMENT OF ENERGY
Richland Field Office
DE - AC06-86RL10838

NOV 13 1992

FLUOR DANIEL, INC.
ADVANCED TECHNOLOGY DIVISION

STRUCTURAL VIT BLDG WALL ELEVATIONS

PROJECT TITLE: HANFORD WASTE VITRIFICATION PLANT

PROJECT: B-595 | FLUOR CONTRACT NO.: 8457 | CWBS NO.: B210A
SCALE: 1/4" = 1'-0" | BLDG. NO.: 1 | INDEX NO.:

CLASSIFICATION: NONE | BY: NOT REQ'D | DRAWING NUMBER: H-2-117995 | SHEET 1 OF 1 | REV. 0

DISTRIBUTION CODE: 103 S123 ACAD INITIALS: A.I. DATE: 11/06/92

r1 Nov 06 18:11:47 1992 V CAD1 P:\PLOTS\VA\117223.PLT

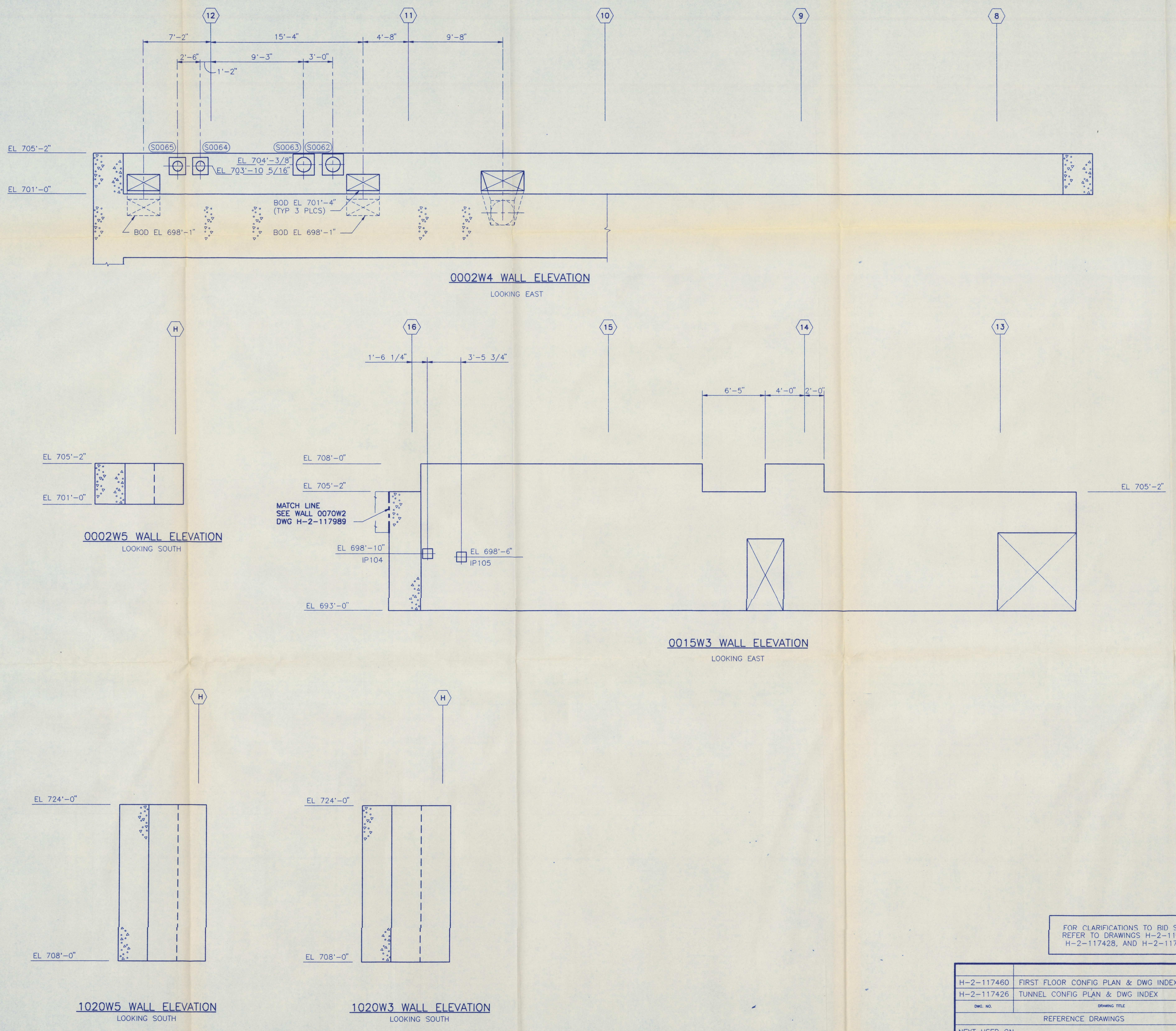

TYPICAL WALL REINF UNO

DOUBLE LAYER EACH FACE
VERT BARS: #10 @ 6
HORIZ BARS: #11 @ 6

NOTES:

1. FOR GENERAL NOTES AND TYPICAL DETAILS SEE DRAWING H-2-117425.
2. FOR WALL LOCATION PLAN AND DRAWING REFERENCE SEE DRAWING H-2-117939 SH 1 AND 2.

0 1 2 3 4 5 10 15 20
GRAPHIC SCALE
1/4" = 1'-0"

QUALITY LEVEL I
SAFETY CLASS 1

FOR CLARIFICATIONS TO BID SCOPE REFER TO DRAWINGS H-2-117427, H-2-117428, AND H-2-117429.

DWG. NO.	DRAWING TITLE
H-2-117460	FIRST FLOOR CONFIG PLAN & DWG INDEX
H-2-117426	TUNNEL CONFIG PLAN & DWG INDEX

REFERENCE DRAWINGS

NEXT USED ON

REV NO.	DATE	REVISION DESCRIPTION	APPROVAL INITIALS
0	11/12/92	APPROVED FOR CONSTRUCTION OF BASE MAT ONLY	[initials]

CADFILE B117996A CADCODE 2B:IBM:ACD2:10.C2:SS

ENGINEERING RELEASE
REV. ______ DATE ______
ERO. ______

SIGNATURE		DATE
PROJ. DIR.		
Q.A. MGR.		
INDEPENDENT SAFETY MGR.		
PROJECT MGR.		
SYSTEMS MGR.		
ENGINEERING MGR.		
SUPERVISOR	[signature]	11/11/92
DESIGN ENGINEER	[signature]	11/11/92
CHECKED	M Bevallos	11/11/92
DRAWN	A. IZURIETA	03/23/92

U.S.DEPARTMENT OF ENERGY
Richland Field Office
DE - AC06-86RL10838
NOV 13 1992

FLUOR DANIEL, INC.
ADVANCED TECHNOLOGY DIVISION

STRUCTURAL
VIT BLDG
WALL ELEVATIONS

PROJECT TITLE: HANFORD WASTE VITRIFICATION PLANT

PROJECT	FLUOR CONTRACT NO.	CWBS NO.
B-595	8457	B210A

SCALE	BLDG. NO.	INDEX NO.
1/4" = 1'-0"	1	

CLASSIFICATION	BY	DRAWING NUMBER	SHEET	OF	REV.
NONE	NOT REQ'D	H-2-117996	1	1	0

DISTRIBUTION CODE: 103 **S124** ACAD INITIALS: A.I. DATE: 11/06/92

r1 Nov 06 18:13:53 1992 V CAD1 P:\PLOTS\VAA17224.PLT

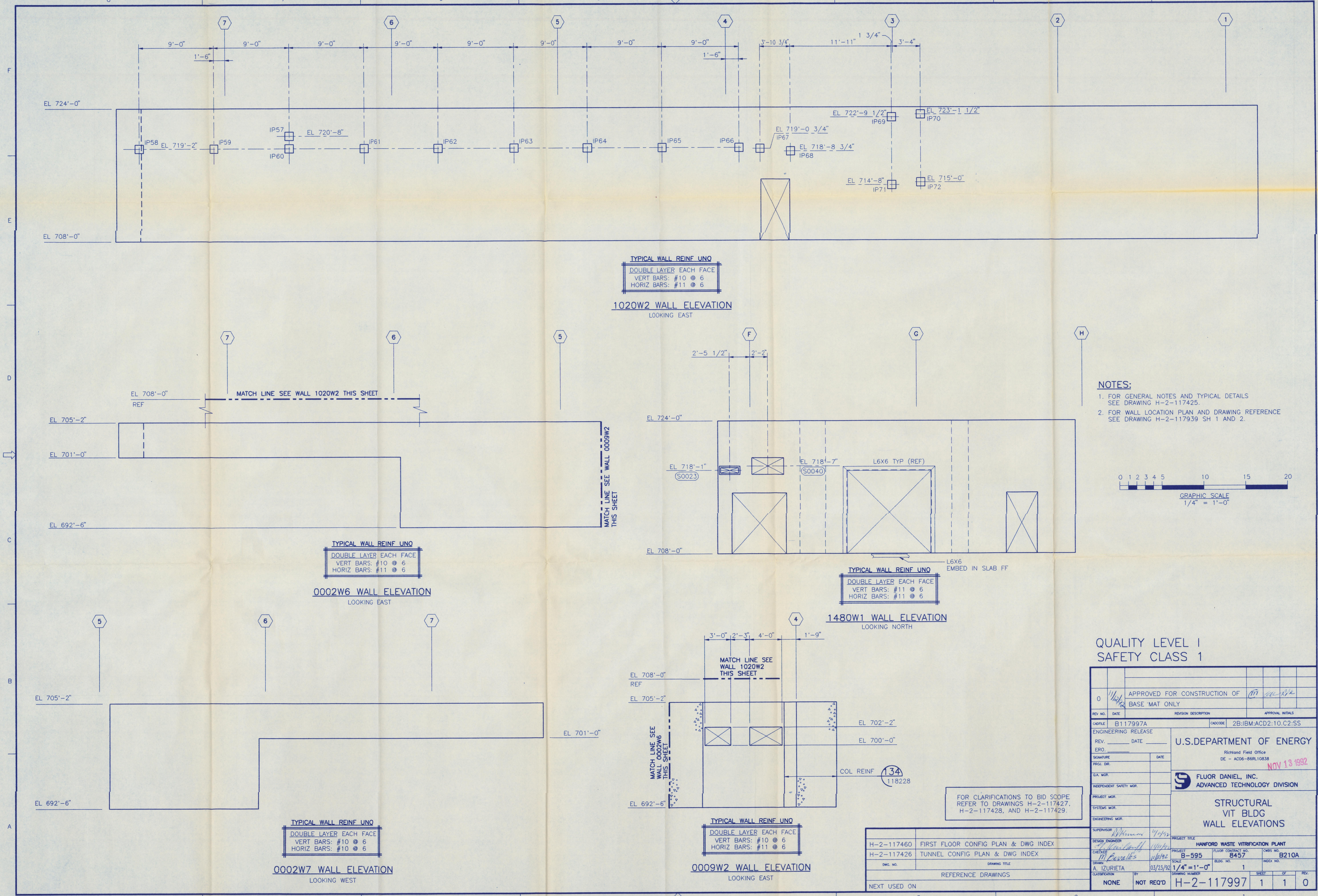

TYPICAL WALL REINF UNO (1020W2, 1480W1): DOUBLE LAYER EACH FACE — VERT BARS: #10 @ 6 / #11 @ 6; HORIZ BARS: #11 @ 6

TYPICAL WALL REINF UNO (0002W6): DOUBLE LAYER EACH FACE — VERT BARS: #10 @ 6; HORIZ BARS: #11 @ 6

TYPICAL WALL REINF UNO (0002W7): DOUBLE LAYER EACH FACE — VERT BARS: #10 @ 6; HORIZ BARS: #10 @ 6

TYPICAL WALL REINF UNO (0009W2): DOUBLE LAYER EACH FACE — VERT BARS: #10 @ 6; HORIZ BARS: #11 @ 6

NOTES:
1. FOR GENERAL NOTES AND TYPICAL DETAILS SEE DRAWING H-2-117425.
2. FOR WALL LOCATION PLAN AND DRAWING REFERENCE SEE DRAWING H-2-117939 SH 1 AND 2.

GRAPHIC SCALE 1/4" = 1'-0"

QUALITY LEVEL I
SAFETY CLASS 1

FOR CLARIFICATIONS TO BID SCOPE REFER TO DRAWINGS H-2-117427, H-2-117428, AND H-2-117429.

DWG. NO.	REFERENCE DRAWINGS
H-2-117460	FIRST FLOOR CONFIG PLAN & DWG INDEX
H-2-117426	TUNNEL CONFIG PLAN & DWG INDEX

NEXT USED ON

REV NO.	DATE	REVISION DESCRIPTION	APPROVAL INITIALS
0	11/11/92	APPROVED FOR CONSTRUCTION OF BASE MAT ONLY	

CADFILE B117997A — CADCODE 2B:IBM:ACD2:10.C2:SS

U.S.DEPARTMENT OF ENERGY
Richland Field Office
DE - AC06-86RL10838

NOV 13 1992

FLUOR DANIEL, INC.
ADVANCED TECHNOLOGY DIVISION

STRUCTURAL
VIT BLDG
WALL ELEVATIONS

HANFORD WASTE VITRIFICATION PLANT

DRAWN A. IZURIETA 03/23/92
PROJECT B-595 — FLUOR CONTRACT NO. 8457 — CWBS NO. B210A
SCALE 1/4" = 1'-0" — BLDG NO. 1
CLASSIFICATION NONE — BY NOT REQ'D
DRAWING NUMBER H-2-117997 — SHEET 1 OF 1 — REV. 0

DISTRIBUTION CODE: 103 — S125 — ACAD — INITIALS: A.I. DATE: 11/06/92

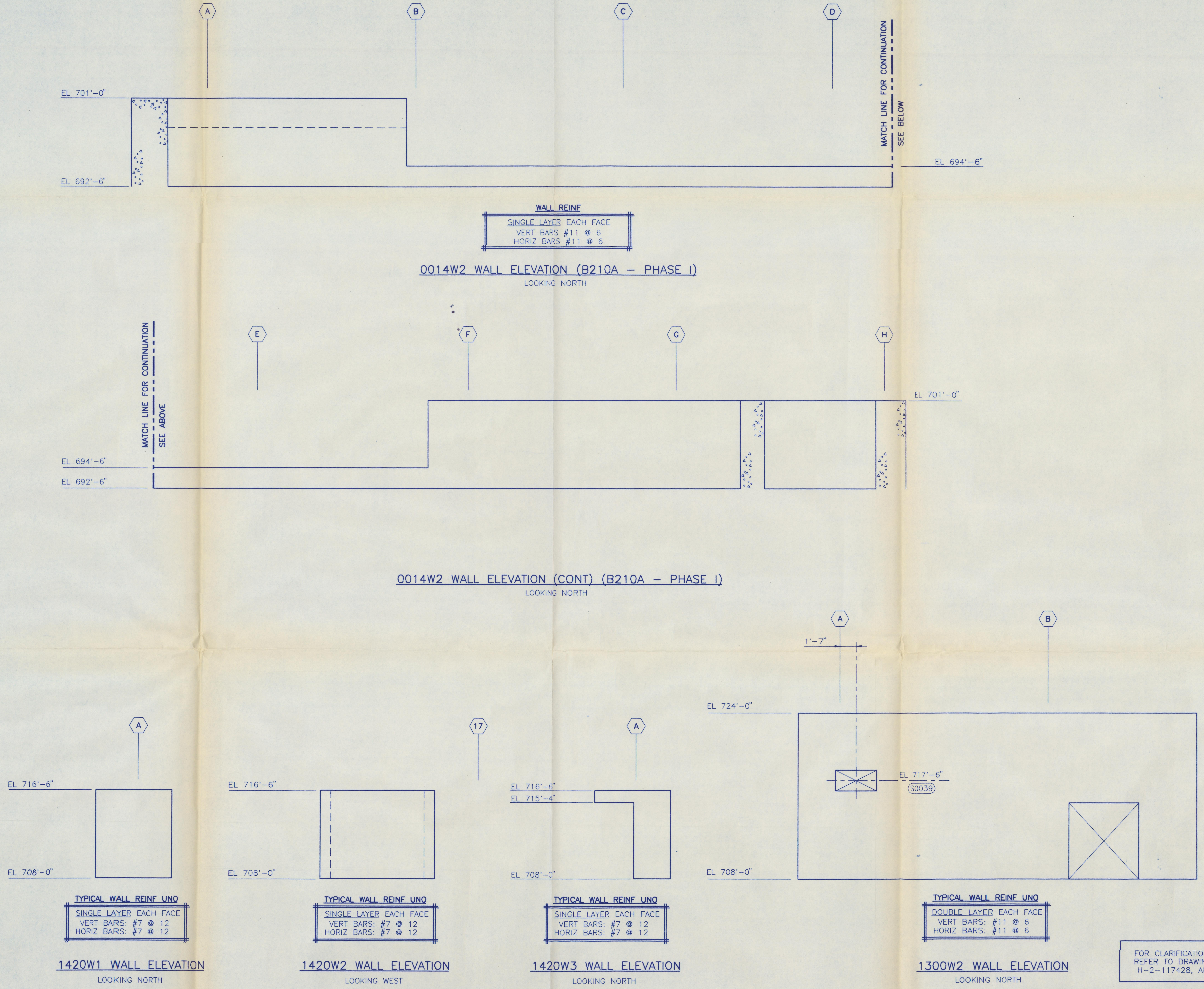

NOTES:

1. FOR GENERAL NOTES AND TYPICAL DETAILS SEE DRAWING H-2-117425.
2. FOR WALL ELEVATION PLAN AND DRAWING REFERENCE SEE DRAWING H-2-117939 SHEETS 1 AND 2.

GRAPHIC SCALE 1/4" = 1'-0"

FOR CLARIFICATIONS TO BID SCOPE REFER TO DRAWINGS H-2-117427, H-2-117428, AND H-2-117429.

QUALITY LEVEL I
SAFETY CLASS 1

REV NO.	DATE	REVISION DESCRIPTION	APPROVAL INITIALS
0	11/12/92	APPROVED FOR CONSTRUCTION OF BASE MAT ONLY	

REFERENCE DRAWINGS

DWG. NO.	DRAWING TITLE
H-2-117426	TUNNEL CONFIG PLAN & DWG INDEX

NEXT USED ON

CADFILE B117998A CADCODE 2B:IBM:ACD2:10.C2:SS

ENGINEERING RELEASE REV. ______ DATE ______ ERO. ______

SIGNATURE	DATE
PROJ. DIR.	
Q.A. MGR.	
INDEPENDENT SAFETY MGR.	
PROJECT MGR.	
SYSTEMS MGR.	
ENGINEERING MGR.	
SUPERVISOR	11/11/92
DESIGN ENGINEER	11/11/92
CHECKED	11/11/92
DRAWN A. IZURIETA	03/23/92

U.S.DEPARTMENT OF ENERGY
Richland Field Office
DE – AC06-86RL10838 NOV 13 1992

FLUOR DANIEL, INC.
ADVANCED TECHNOLOGY DIVISION

STRUCTURAL
VIT BLDG
WALL ELEVATIONS

PROJECT TITLE: HANFORD WASTE VITRIFICATION PLANT

PROJECT B-595 | FLUOR CONTRACT NO. 8457 | CWBS NO. B210A
SCALE 1/4" = 1'-0" | BLDG. NO. 1 | INDEX NO.

CLASSIFICATION NONE | BY NOT REQ'D | DRAWING NUMBER H-2-117998 | SHEET 1 | OF 1 | REV. 0

DISTRIBUTION CODE: 103 S126 ACAD INITIALS: A.I. DATE: 11/06/92

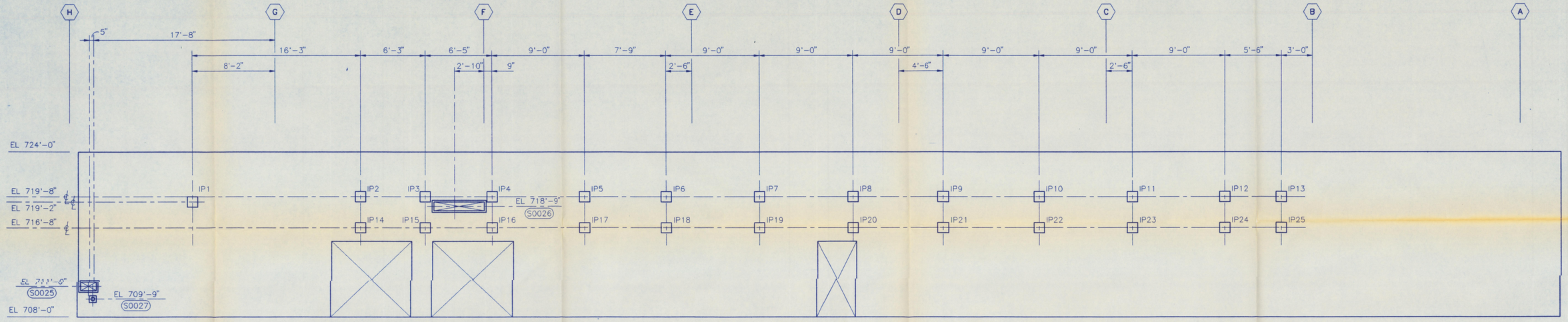

1080W1 WALL ELEVATION

LOOKING SOUTH

TYPICAL WALL REINF UNO

DOUBLE LAYER EACH FACE
VERT BARS: #11 @ 6
HORIZ BARS: #11 @ 6

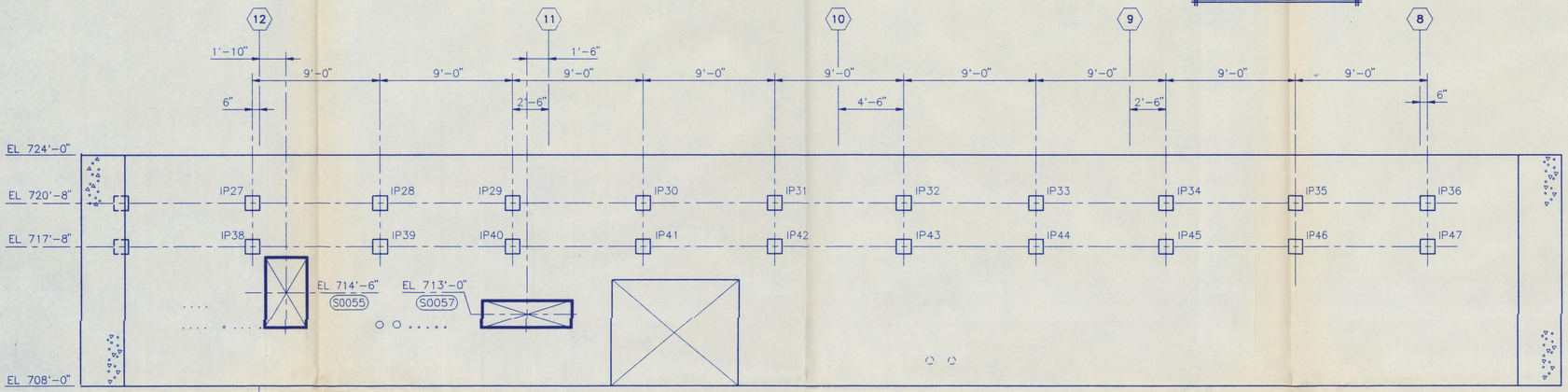

1020W4 WALL ELEVATION

LOOKING EAST

TYPICAL WALL REINF UNO

DOUBLE LAYER EACH FACE
VERT BARS: #10 @ 6
HORIZ BARS: #11 @ 6

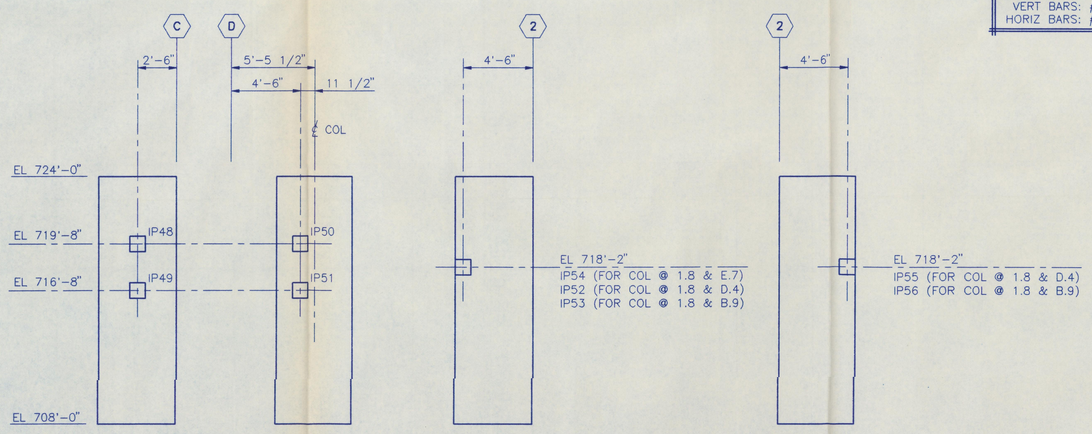

SOUTH EL
GRID 1.8 & B.9

SOUTH EL
GRID 1.8 & D.3

EAST EL
GRID 1.8 & E.7, D.4, B.9

WEST EL
GRID 1.8 & B.9, D.4

COLUMN ELEVATIONS
FOR COLUMN REINF SEE DWG H-2-118226

NOTES:

1. FOR GENERAL NOTES AND TYPICAL DETAILS SEE DRAWING H-2-117425.
2. FOR WALL LOCATION PLAN AND DRAWING REFERENCE SEE DRAWING H-2-117939 SH 2.

0 1 2 3 4 5 10 15 20
GRAPHIC SCALE
1/4" = 1'-0"

QUALITY LEVEL 1
SAFETY CLASS 1

REV NO.	DATE	REVISION DESCRIPTION	APPROVAL INITIALS
G	11/12/92	ISSUED FOR BID PURPOSES ONLY	

CADFILE B117999A CADCODE 2B:IBM:ACD2:10.C2:SS

ENGINEERING RELEASE
REV. _____ DATE _____
ERO. _____

	SIGNATURE	DATE
PROJ. DIR.		
Q.A. MGR.		
INDEPENDENT SAFETY MGR.		
PROJECT MGR.		
SYSTEMS MGR.		
ENGINEERING MGR.		
SUPERVISOR		
DESIGN ENGINEER		
CHECKED		
DRAWN	D. STEPHENS	03/23/92
CLASSIFICATION	BY	
NONE	NOT REQ'D	

U.S.DEPARTMENT OF ENERGY
Richland Field Office
DE - AC06-86RL10838
NOV 13 1992

FLUOR DANIEL, INC.
ADVANCED TECHNOLOGY DIVISION

STRUCTURAL
VIT BLDG
WALL ELEVATIONS

PROJECT TITLE: HANFORD WASTE VITRIFICATION PLANT

PROJECT	FLUOR CONTRACT NO.	CWBS NO.
B-595	8457	B210A
SCALE	BLDG. NO.	INDEX NO.
1/4" = 1'-0"	1	

DRAWING NUMBER	SHEET	OF	REV.
H-2-117999	1	1	G

DWG. NO.	DRAWING TITLE
H-2-117460	FIRST FLOOR CONFIG PLAN & DWG INDEX
H-2-117426	TUNNEL CONFIG PLAN & DWG INDEX
REFERENCE DRAWINGS	
NEXT USED ON	

2|1|0A H-2-117999 0 1 1

DISTRIBUTION CODE: 103 S127 ACAD

INITIALS: A.I.
DATE: 11/06/92

Tue Nov 10 09:46:44 1992 P_CAD2 G:\PLOTS\PA17AL4.PLT

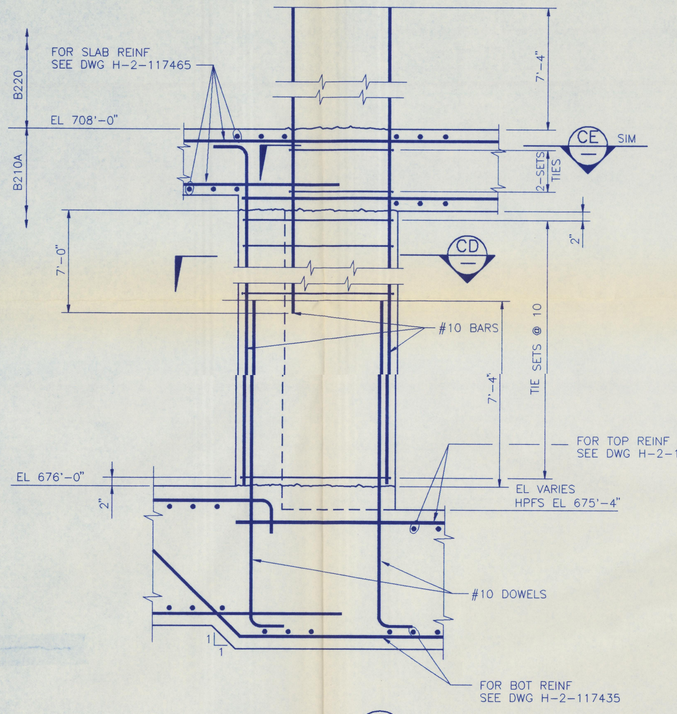

SECTION CA
SCALE: 3/8"=1'-0" (117443, 117475)

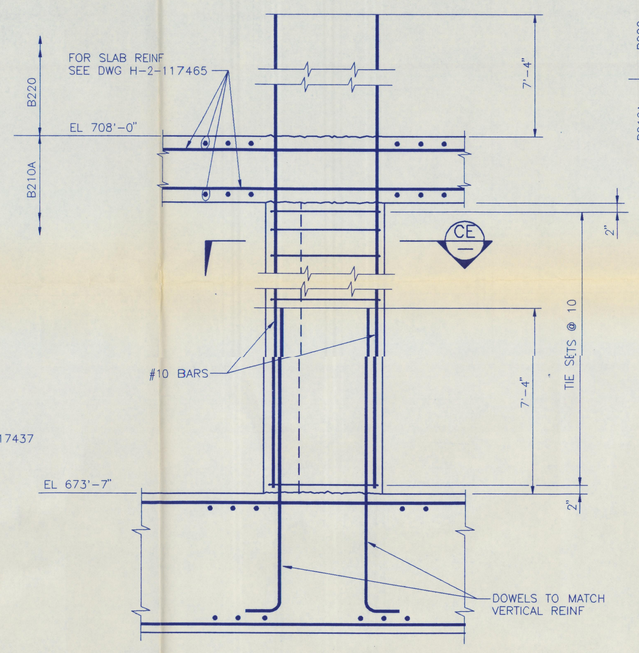

SECTION CB
SCALE: 3/8"=1'-0" (117442, 117475)

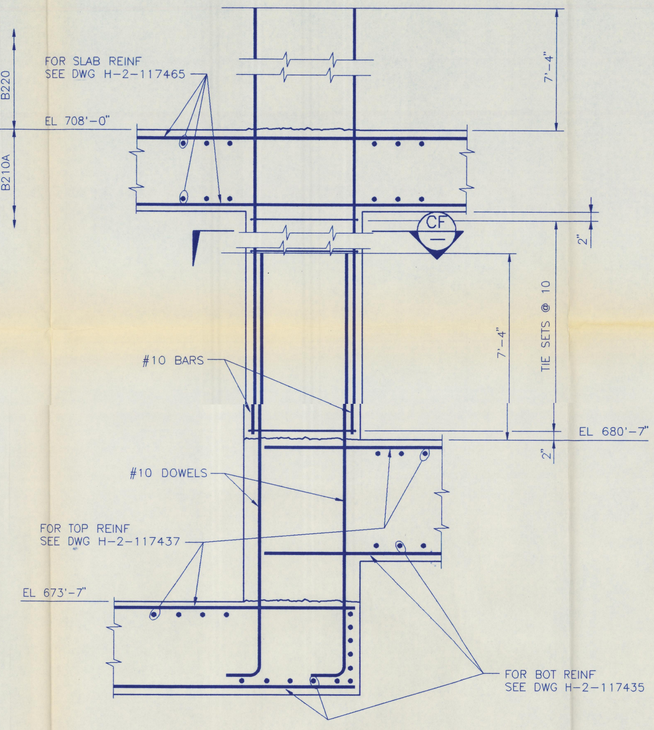

SECTION CC
SCALE: 3/8"=1'-0" (117441, 117475)

NOTE:

1. FOR GENERAL NOTES AND TYPICAL DETAILS SEE DRAWING H-2-117425.

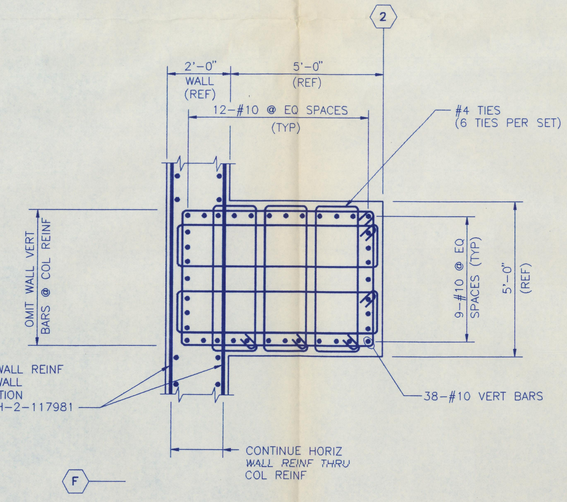

SECTION CD
SCALE: 1/2"=1'-0"

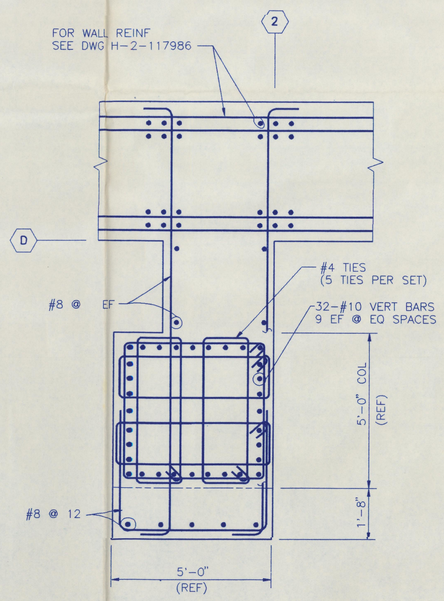

SECTION CE
SCALE: 1/2"=1'-0"

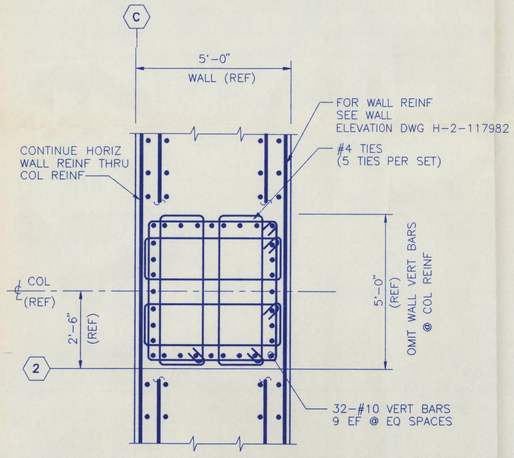

SECTION CF
SCALE: 1/2"=1'-0"

FOR CLARIFICATIONS TO BID SCOPE REFER TO DRAWINGS H-2-117427, H-2-117428, AND H-2-117429.

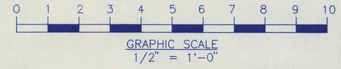

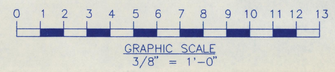

QUALITY LEVEL 1
SAFETY CLASS 1

REV. NO.	DATE	REVISION DESCRIPTION	APPROVAL INITIALS
0	11/19/92	APPROVED FOR CONSTRUCTION OF BASE MAT ONLY	

CADFILE	B118226A
CADCODE	2B:IBM:ACD2:10.C2:SS

ENGINEERING RELEASE
REV. _____ DATE _____
ERO. _____

SIGNATURE	DATE
PROJ. DIR.	
Q.A. MGR.	
INDEPENDENT SAFETY MGR.	
PROJECT MGR.	
SYSTEMS MGR.	
ENGINEERING MGR.	
SUPERVISOR	11/19/92
DESIGN ENGINEER	11/19/92
CHECKED	11/19/92
DRAWN S. TERRY	01/31/92

U.S. DEPARTMENT OF ENERGY
Richland Field Office
DE - AC06-86RL10838

NOV 13 1992

FLUOR DANIEL, INC.
ADVANCED TECHNOLOGY DIVISION

PROJECT TITLE
HANFORD WASTE VITRIFICATION PLANT

STRUCT VIT BLDG
REINF SECTS
CA, CB, CC, CD, CE, & CF

PROJECT	FLUOR CONTRACT NO.	CWBS NO.	
B-595	8457	B210A	
SCALE	BLDG. NO.	INDEX NO.	
AS NOTED	1		

CLASSIFICATION	BY	DRAWING NUMBER	SHEET	OF	REV.
NONE	NOT REQD	H-2-118226	1	1	0

DWG. NO.	DRAWING TITLE
H-2-117460	FIRST FLOOR CONFIG PLAN & DWG INDEX
H-2-117426	TUNNEL CONFIG PLAN & DWG INDEX
REFERENCE DRAWINGS	
NEXT USED ON	

DISTRIBUTION CODE: 103

S128 ACAD

INITIALS: A.I.
DATE: 11/06/92

2|1|0A | H-2-118226 | 0 | 1 | 1 | A|F|C

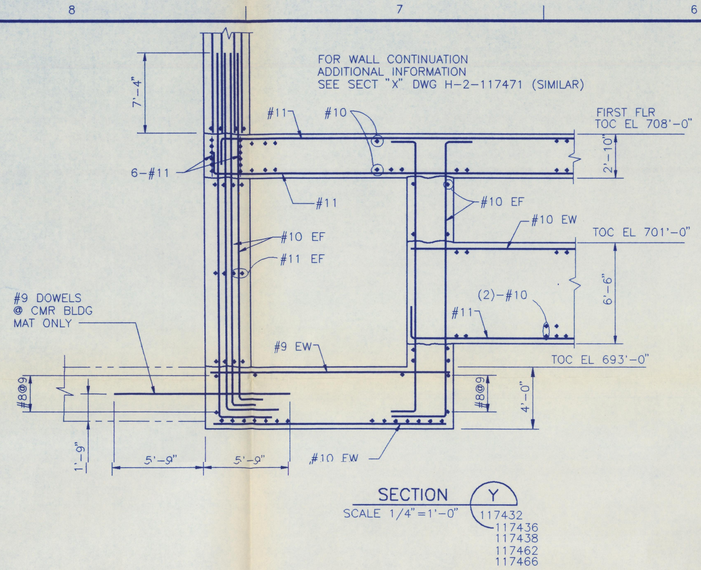

SECTION Y
SCALE 1/4"=1'-0"
117432
117436
117438
117462
117466

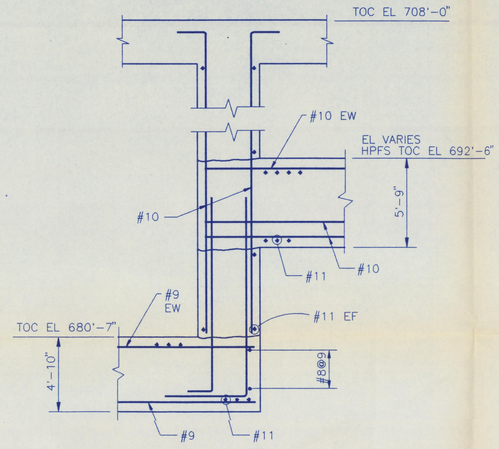

SECTION Z
SCALE 1/4"=1'-0"
117431
117435
117437

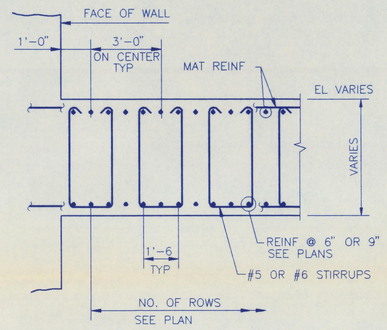

SECTION AD
SCALE NONE
117437
117438

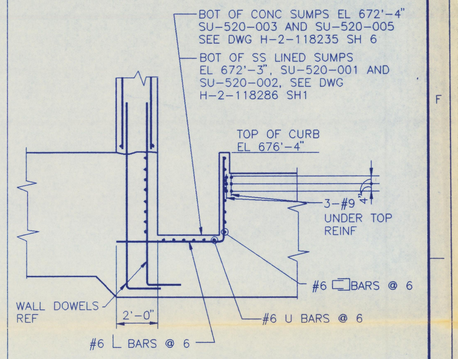

NOTE
FOR REINF NOT SHOWN
SEE SECT T/117469

SECTION ET
SCALE NONE
117437

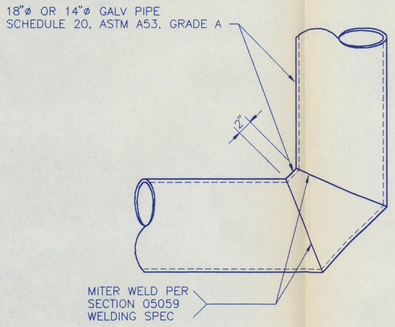

NOTE:
PIPE FABRICATOR SHALL DETERMINE LOCATION OF FIELD WELDS REQUIRED FOR SHIPPING AND INSTALLATION OF PIPE.

DETAIL 75
SCALE NONE
117468
117470

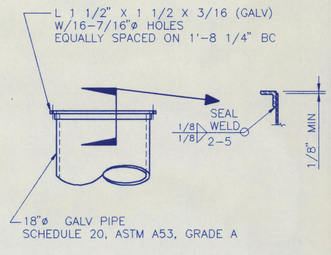

DETAIL 76
SCALE NONE
117470

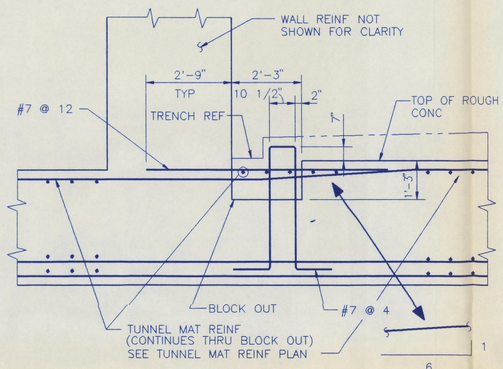

SECTION EU
SCALE 1/2"=1'-0"
117431
117432
117437
117438

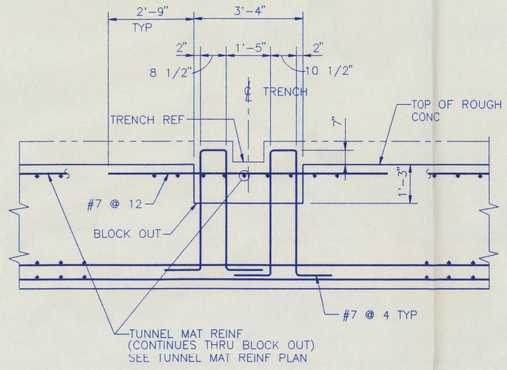

SECTION EW
SCALE 1/2"=1'-0"
117432
117438

NOTES:

1. FOR GENERAL NOTES AND TYPICAL DETAILS SEE DRAWING H-2-117425.
2. FOR FORMING PLANS SEE DRAWING H-2-117431, H-2-117432, H-2-117461 & H-2-117462

GRAPHIC SCALE
1/4" = 1'-0"

GRAPHIC SCALE
1/2" = 1'-0"

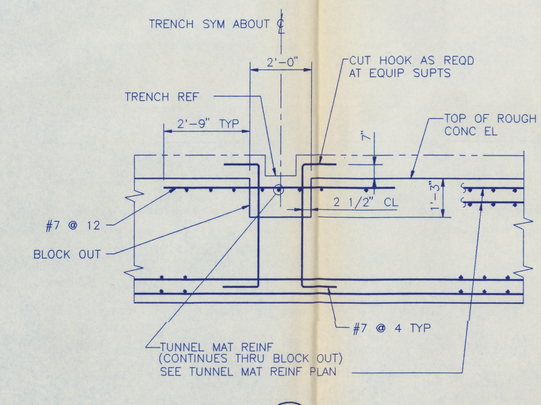

SECTION EX
SCALE 1/2"=1'-0"
117431
117432
117437
117438

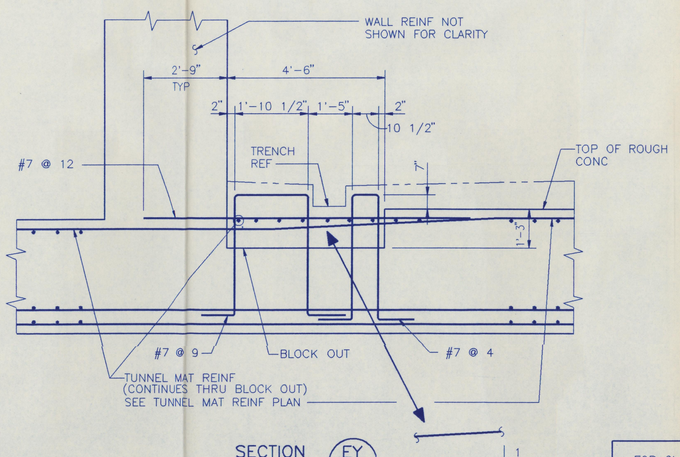

SECTION EY
SCALE 1/2"=1'-0"
117431
117437

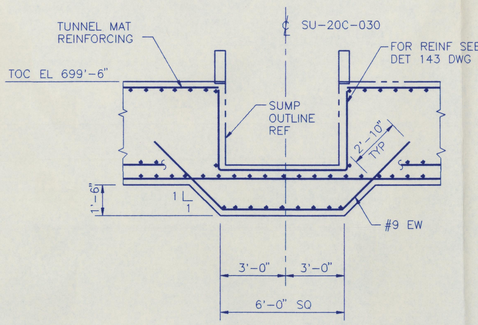

SECTION EZ
SCALE NONE
117438

FOR CLARIFICATIONS TO BID SCOPE REFER TO DRAWINGS H-2-117427, H-2-117428, AND H-2-117429.

DWG. NO.	DRAWING TITLE
H-2-117427	FIRST FLOOR CONFIG PLAN & DWG INDEX
H-2-117426	TUNNEL CONFIG PLAN & DWG INDEX

REFERENCE DRAWINGS

NEXT USED ON

QUALITY LEVEL 1
SAFETY CLASS 1

REV NO.	DATE	REVISION DESCRIPTION	APPROVAL INITIALS
0	11/12/92	APPROVED FOR CONSTRUCTION OF BASE MAT ONLY	

CADFILE B118227A CADCODE 2B:IBM:ACD2:10.C2:SS

ENGINEERING RELEASE
REV. ____ DATE ____
ERO. ____

	SIGNATURE	DATE
PROJ. DIR.		
G.A. MGR.		
INDEPENDENT SAFETY MGR.		
PROJECT MGR.		
SYSTEMS MGR.		
ENGINEERING MGR.		
SUPERVISOR		11/4/92
DESIGN ENGINEER		11/4/92
CHECKED		11/11/92
DRAWN M. MURRAY		07/09/92

U.S.DEPARTMENT OF ENERGY
Richland Field Office
DE - AC06-86RL10838

NOV 13 1992

FLUOR DANIEL, INC.
ADVANCED TECHNOLOGY DIVISION

STRUCTURAL
VIT BLDG
TUNNEL REINF SECTIONS

PROJECT TITLE: HANFORD WASTE VITRIFICATION PLANT

PROJECT	FLUOR CONTRACT NO.	CWBS NO.
B-595	8457	B210A

SCALE	BLDG. NO.	INDEX NO.
SHOWN	1	

CLASSIFICATION	BY	DRAWING NUMBER	SHEET	OF	REV.
NONE	NOT REQD	H-2-118227	1	1	0

DISTRIBUTION CODE: 103 S129 ACAD INITIALS: A.I. DATE: 11/06/92

2 1 0 A | H-2-118227 | A F C

1 2 3 4 5 6 7 8 9 10 11 12 13 14 15 16 17 18 19 20 21 22 23 24 25 26 27 28 29 30 31 32 33 34 35 36 37 38 39 40 41 42 43 44 45 46 47 48 49 50 51 52 | 77 78 79 80

PAE Nov 17 18:38:56 1992 V_CADI D:\PLOTS\VA17183.PLT

Nov 17 18:38:56 1992 V_CADI D:\PLOTS\VA17183.PLT

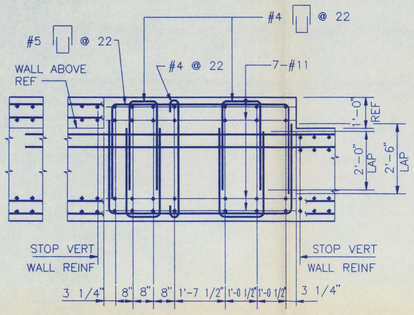

SEE NOTE 2 & 3 THIS DWG

DETAIL 134 117431

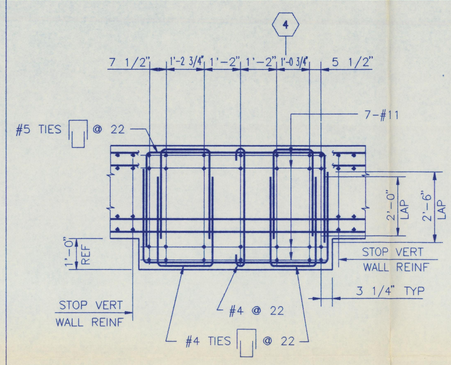

SEE NOTE 2 & 3 THIS DWG

DETAIL 135 117431

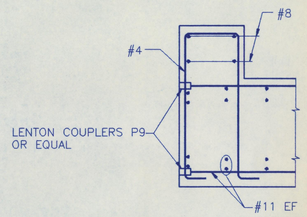

SEE NOTE 2 THIS DWG

DETAIL 136 117431

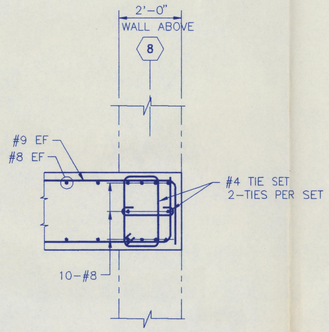

SEE NOTE 2 THIS DWG

DETAIL 137 117431

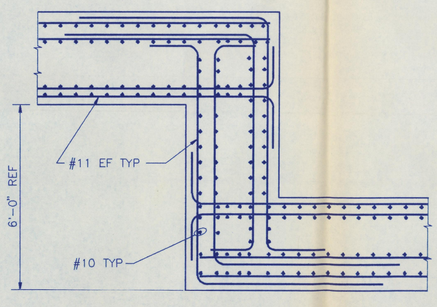

SEE NOTE 2 THIS DWG

DETAIL 138 117431

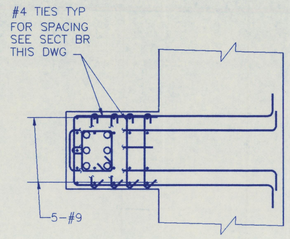

SEE NOTE 2 & 3 THIS DWG

SECTION BS

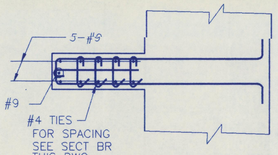

SEE NOTE 2 & 3 THIS DWG

SECTION BT

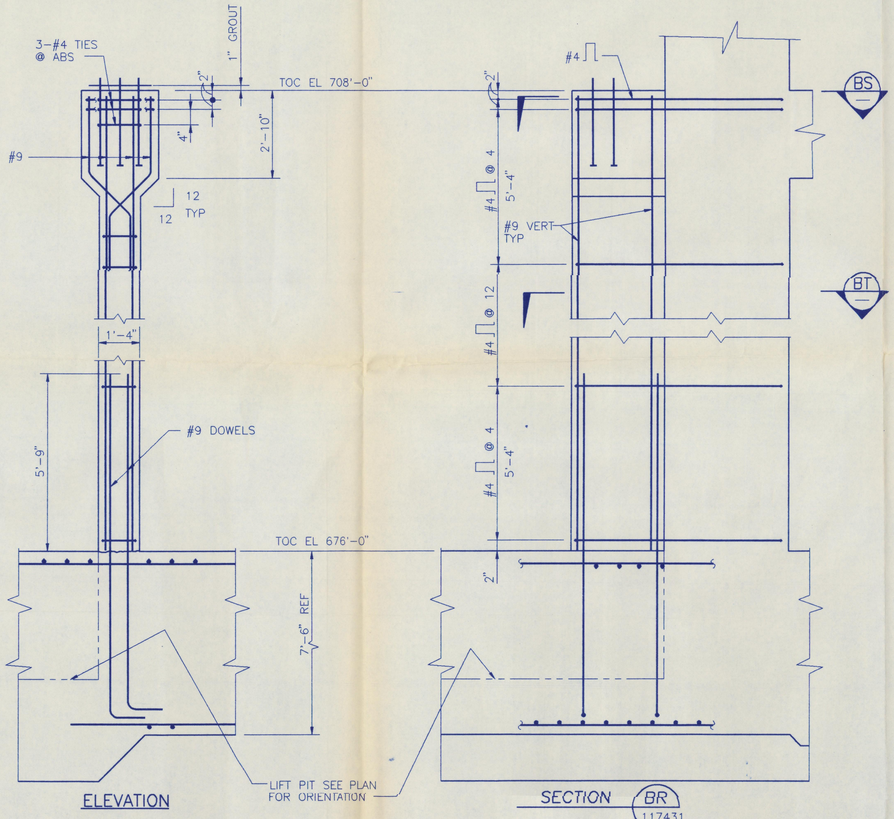

ELEVATION

SECTION BR 117431 117437

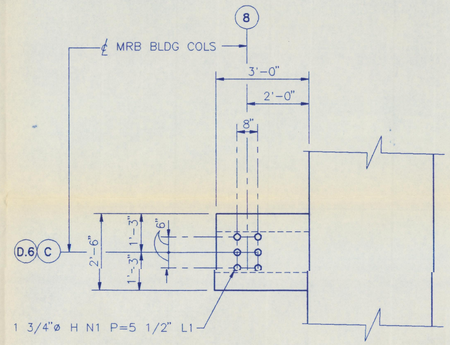

PLAN

NOTES:

1. FOR GENERAL NOTES AND TYPICAL DETAILS SEE DRAWING H-2-117425.
2. VERTICAL WALL REINF SHOWN, DOWELS TO MATCH IN SIZE AND SPACING.
3. FOR REINF NOT SHOWN SEE WALL ELEVATIONS.

0 1 2 3 4 5 6 7 8 9 10

GRAPHIC SCALE
1/2" = 1'-0"

QUALITY LEVEL 1
SAFETY CLASS 1

REV NO.	DATE	REVISION DESCRIPTION	APPROVAL INITIALS
0	11/6/92	APPROVED FOR CONSTRUCTION OF BASE MAT ONLY	

CADFILE B118228A CADCODE 2B:IBM:ACD2:10.C2:SS

ENGINEERING RELEASE
REV. ____ DATE ____
ERO. ____

	SIGNATURE	DATE
PROJ. DIR.		
O.A. MGR.		
INDEPENDENT SAFETY MGR.		
PROJECT MGR.		
SYSTEMS MGR.		
ENGINEERING MGR.		
SUPERVISOR		11/11/92
DESIGN ENGINEER		11/11/92
CHECKED		11/11/92
DRAWN C. FAULKNER		03/23/92

U.S.DEPARTMENT OF ENERGY
Richland Field Office
DE - AC06-86RL10838
NOV 13 1992

FLUOR DANIEL, INC.
ADVANCED TECHNOLOGY DIVISION

STRUCTURAL
VIT BLDG
SECTIONS AND DETAILS

PROJECT TITLE: HANFORD WASTE VITRIFICATION PLANT
PROJECT B-595 | FLUOR CONTRACT NO. 8457 | CWBS NO. B210A
SCALE 1/2" = 1'-0" | BLDG. NO. 1 | INDEX NO.
CLASSIFICATION NONE | BY NOT REQ'D | DRAWING NUMBER H-2-118228 | SHEET 1 | OF 1 | REV. 0

FOR CLARIFICATIONS TO BID SCOPE REFER TO DRAWINGS H-2-117427, H-2-117428, AND H-2-117429.

H-2-117426	TUNNEL CONFIG PLAN & DWG INDEX
DWG. NO.	DRAWING TITLE
REFERENCE DRAWINGS	
NEXT USED ON	

2 1 0 A | H-2-118228 | 0 | A F C

DISTRIBUTION CODE: 103 S131 ACAD INITIALS: A.I. DATE: 11/06/92

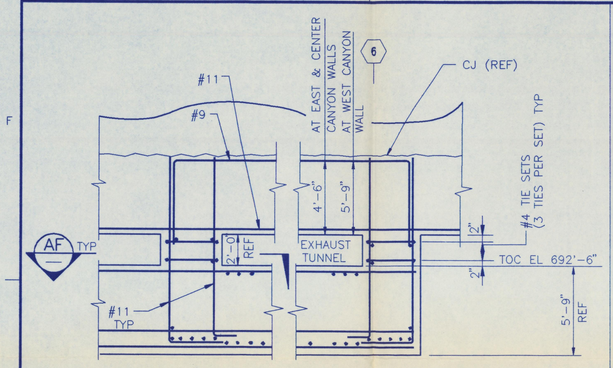

NOTE
FOR INFORMATION NOT SHOWN
SEE REINF PLANS & SECTIONS

SECTION AE
SCALE: NONE
117435
117437

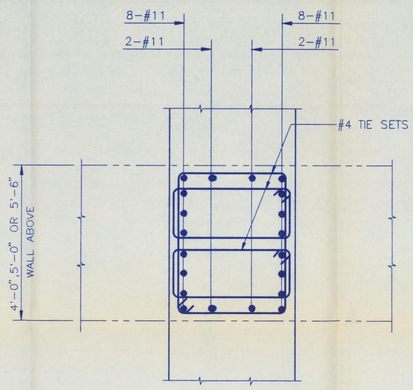

SECTION AF
SCALE: NONE

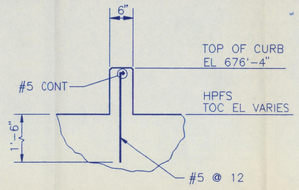

SECTION AG
SCALE: 3/4"=1'-0"
117437
117443

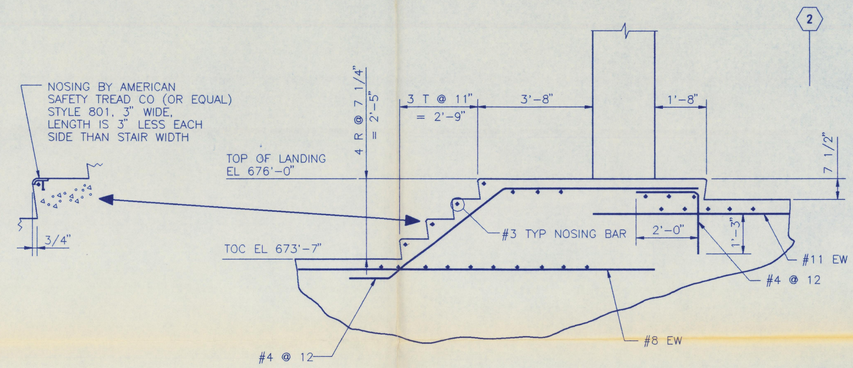

SECTION AH
SCALE: 1/2"=1'-0"
117437
117442

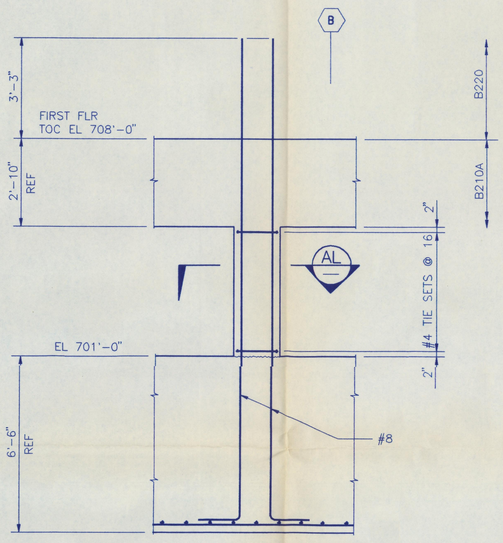

NOTE
FOR REINF NOT SHOWN
SEE SLAB PLANS

SECTION AK
SCALE: 1/2"=1'-0"
117438
117447
117450
117453
117481

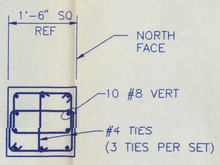

SECTION AL
SCALE: 3/4"=1'-0"

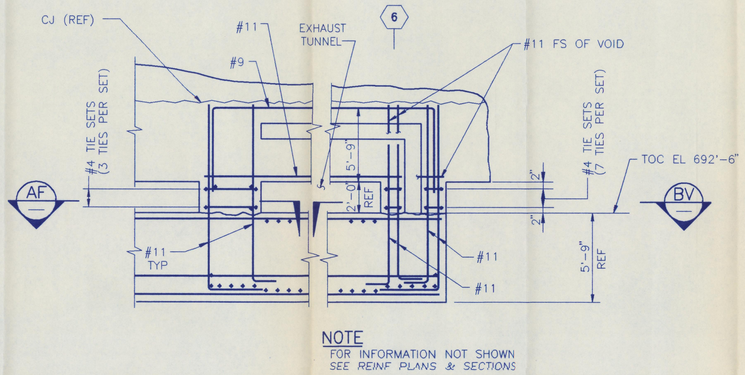

NOTE
FOR INFORMATION NOT SHOWN
SEE REINF PLANS & SECTIONS

SECTION BU
SCALE: NONE
117437

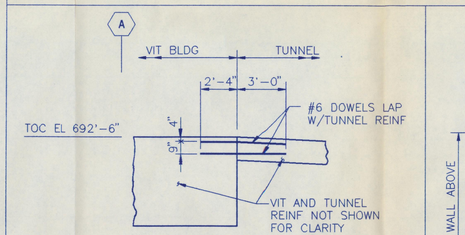

SECTION BW
SCALE: 1/4"=1'-0"
117439

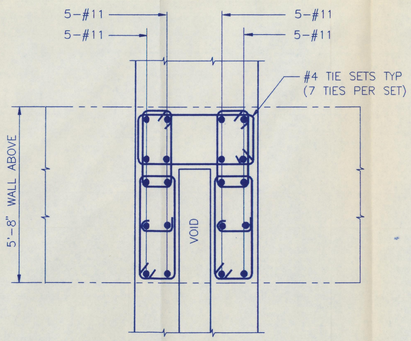

SECTION BV
SCALE: 1/2"=1'-0"

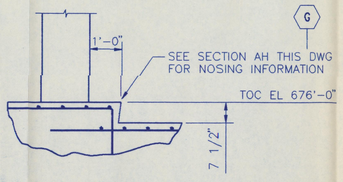

SECTION AJ
SCALE: 1/2"=1'-0"
117437
117443

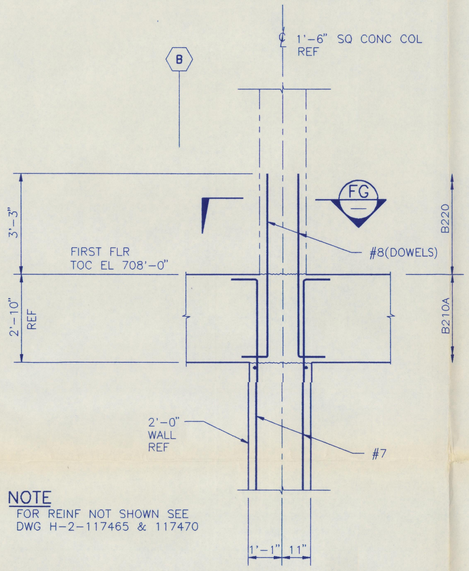

NOTE
FOR REINF NOT SHOWN SEE
DWG H-2-117465 & 117470

SECTION FF
SCALE: 1/2"=1'-0"
117465
117477

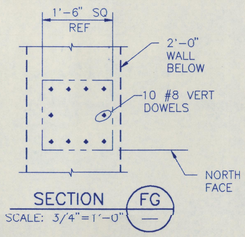

SECTION FG
SCALE: 3/4"=1'-0"

NOTE:
1. FOR GENERAL NOTES AND TYPICAL DETAILS SEE DRAWING H-2-117425.

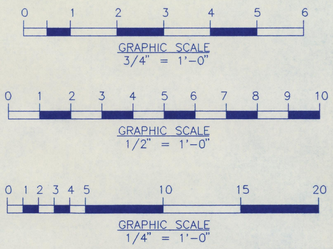

QUALITY LEVEL 1
SAFETY CLASS 1

FOR CLARIFICATIONS TO BID SCOPE REFER TO DRAWINGS H-2-117427, H-2-117428, AND H-2-117429.

DWG. NO.	DRAWING TITLE
H-2-117426	TUNNEL CONFIG PLAN & DWG INDEX
REFERENCE DRAWINGS	
NEXT USED ON	

REV. NO.	DATE	REVISION DESCRIPTION	APPROVAL INITIALS
0	11/12/92	APPROVED FOR CONSTRUCTION OF BASE MAT ONLY	

CADFILE B118229A CADCODE 2B:IBM:ACD2:10.C2:SS

ENGINEERING RELEASE
REV. _____ DATE _____
ERO. _____

	SIGNATURE	DATE
PROJ. DIR.		
G.A. MGR.		
INDEPENDENT SAFETY MGR.		
PROJECT MGR.		
SYSTEMS MGR.		
ENGINEERING MGR.		
SUPERVISOR	[illegible]	11/9/92
DESIGN ENGINEER	[illegible]	11/9/92
CHECKED	[illegible]	11/9/92
DRAWN	H. KANO	06/09/92
CLASSIFICATION	NONE	BY: NOT REQ'D

U.S. DEPARTMENT OF ENERGY
Richland Field Office
DE - AC06-86RL10838
NOV 13 1992

FLUOR DANIEL, INC.
ADVANCED TECHNOLOGY DIVISION

STRUCT VIT BLDG REINFORCING SECTIONS

PROJECT TITLE
HANFORD WASTE VITRIFICATION PLANT

PROJECT	FLUOR CONTRACT NO.	CWBS NO.
B-595	8457	B210A
SCALE	BLDG. NO.	INDEX NO.
SHOWN	1	

DRAWING NUMBER H-2-118229 SHEET 1 OF 1 REV. 0

2 1 0 A | H-2-1 1 8 2 2 9 | 0 1 1 | A F C

DISTRIBUTION CODE: 103 S132 ACAD

INITIALS: A.I.
DATE: 11/06/92

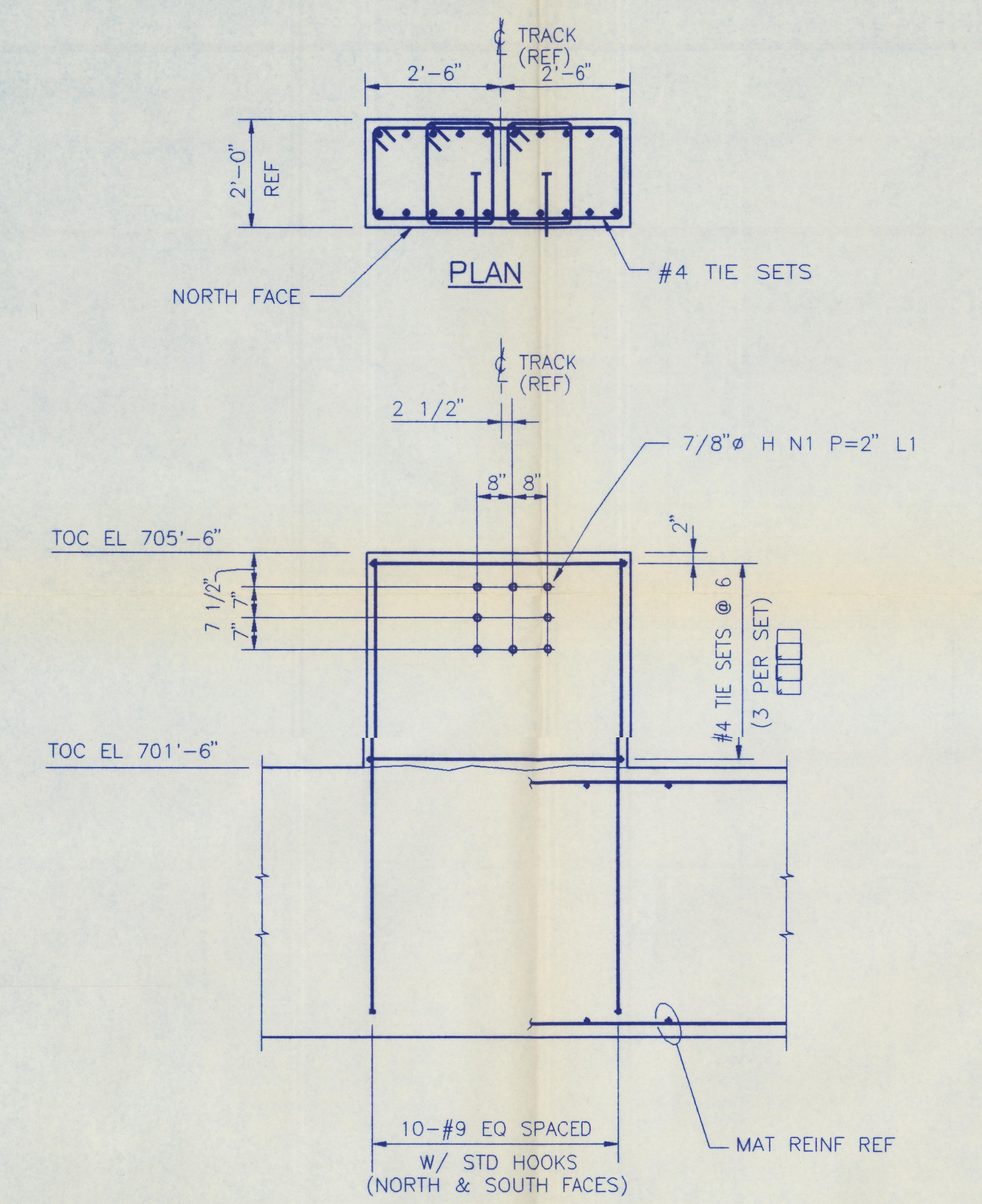

SECTION AA
SCALE: 1/2"=1'-0" 117454

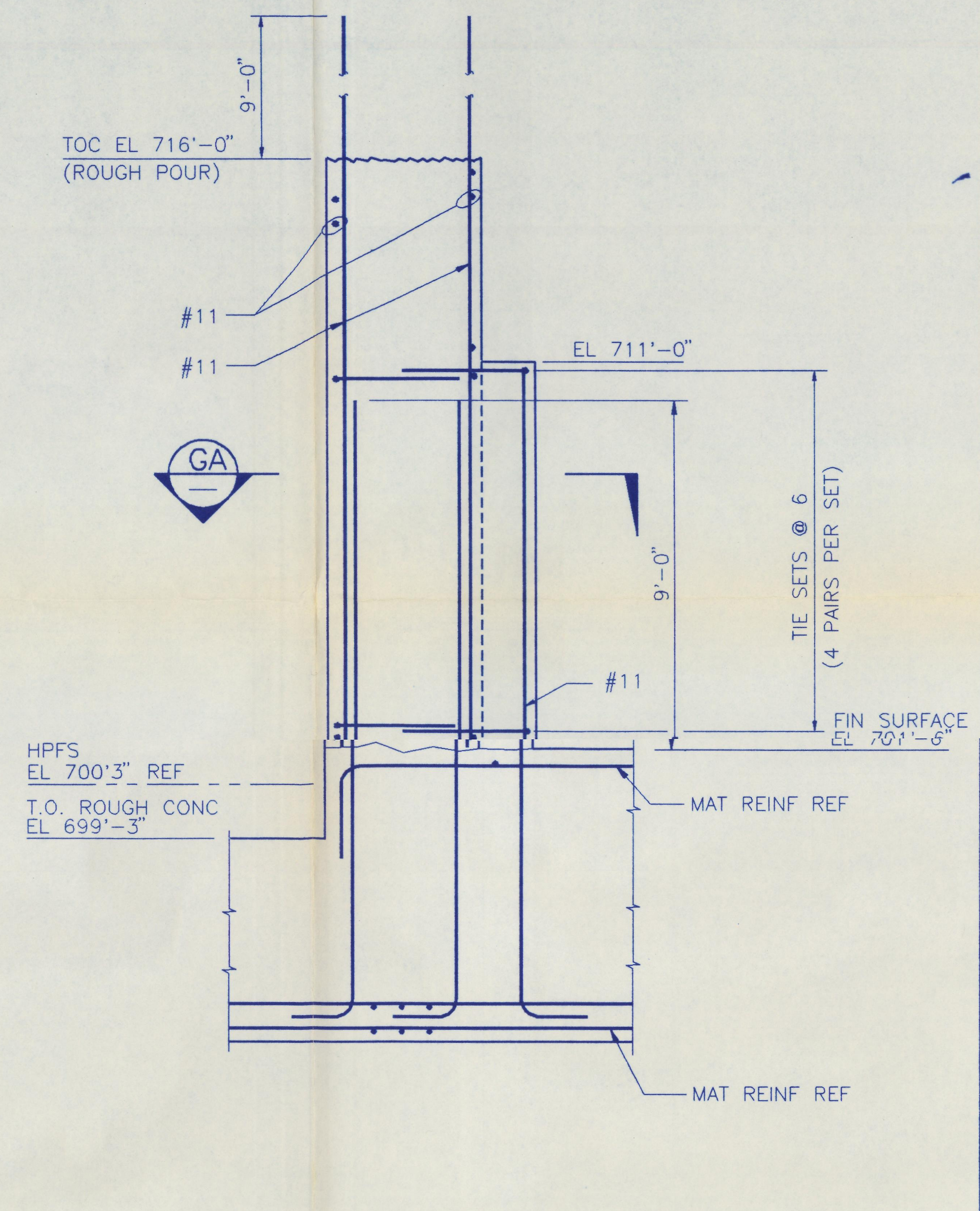

SECTION AB
SCALE: NONE 117454

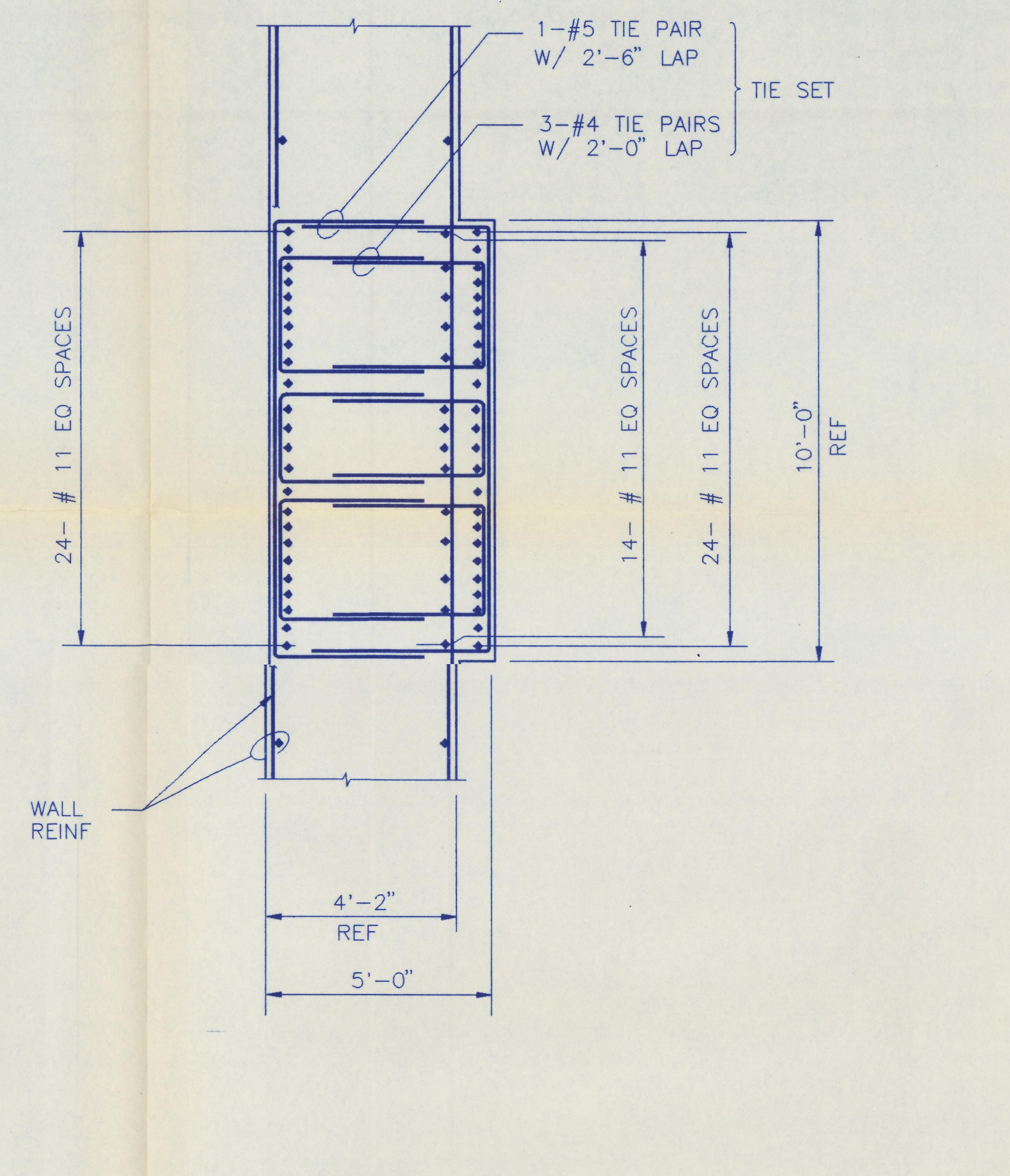

SECTION GA
SCALE: 3/8"=1'-0" —

NOTES:

1. FOR GENERAL NOTES AND TYPICAL DETAILS SEE DRAWING H-2-117425.
2. COVER AND PROTECT THE INTERNAL THREADS OF THE SLEEVE NUT PRIOR TO RAIL PLACEMENT.
3. SLEEVE NUTS SHALL MEET THE REQUIREMENTS OF ASTM 563: THREADS SHALL MEET THE REQUIREMENTS OF ANSI B1.-1982, UNC SERIES, CLASS 2B.
4. FOR SLEEVE AND WELD DETAILS SEE DRAWING H-2-117425 SHT 2.

0 1 2 3 4 5 6 7 8 9 10
GRAPHIC SCALE
1/2" = 1'-0"

0 1 2 3 4 5 6 7 8 9 10 11 12 13
GRAPHIC SCALE
3/8" = 1'-0"

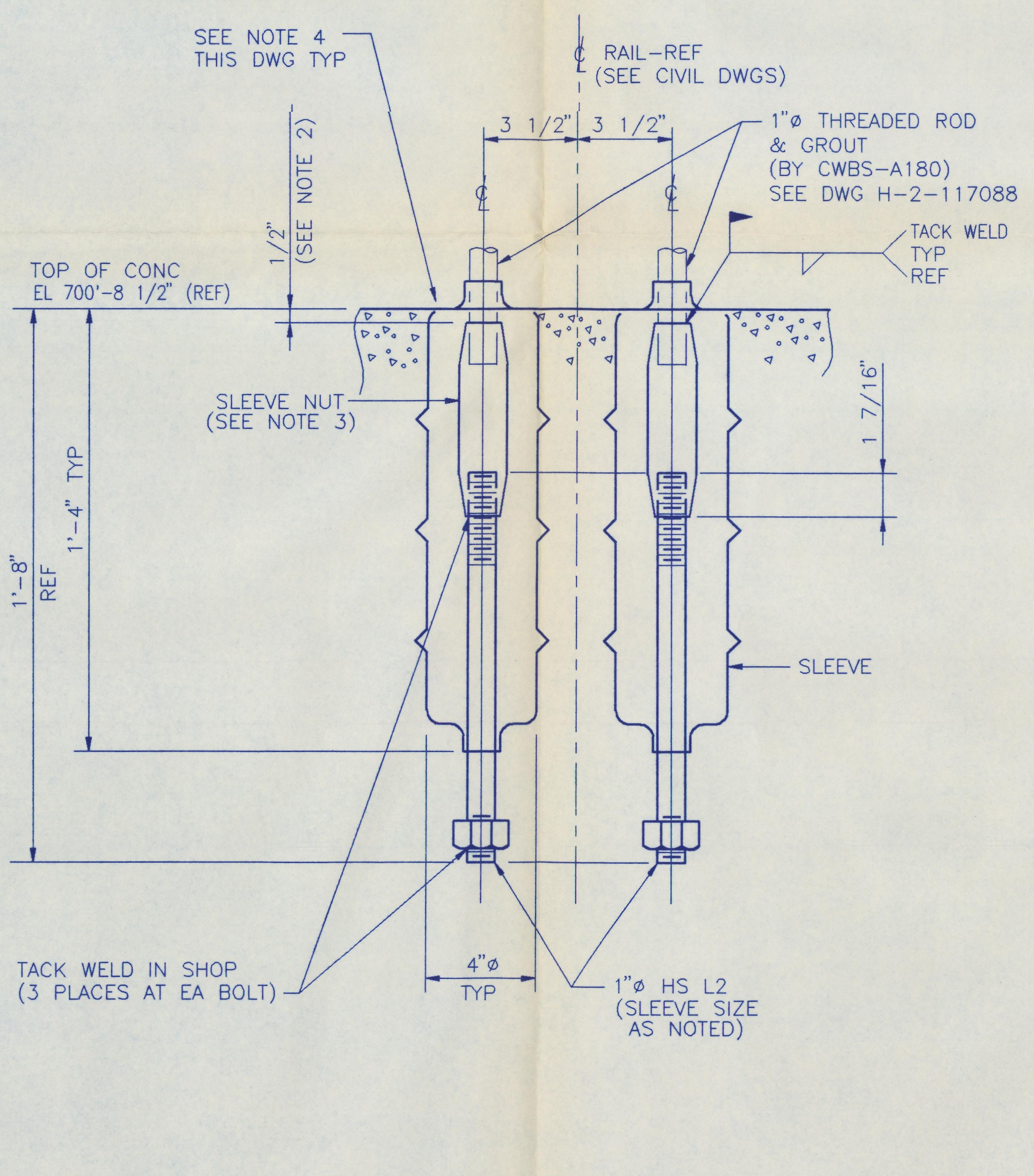

SECTION FZ
SCALE: NONE 117454

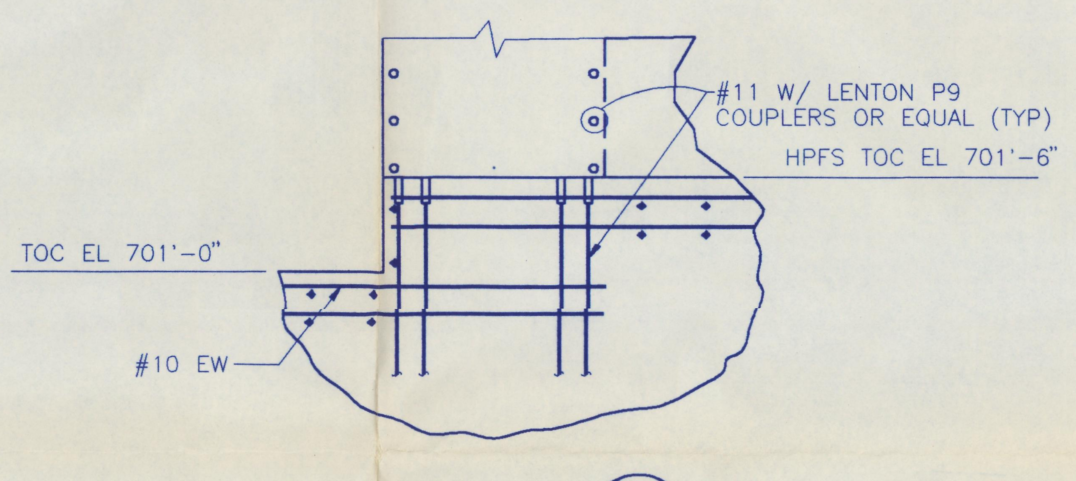

SECTION FC
SCALE: 1/2"=1'-0" 117437

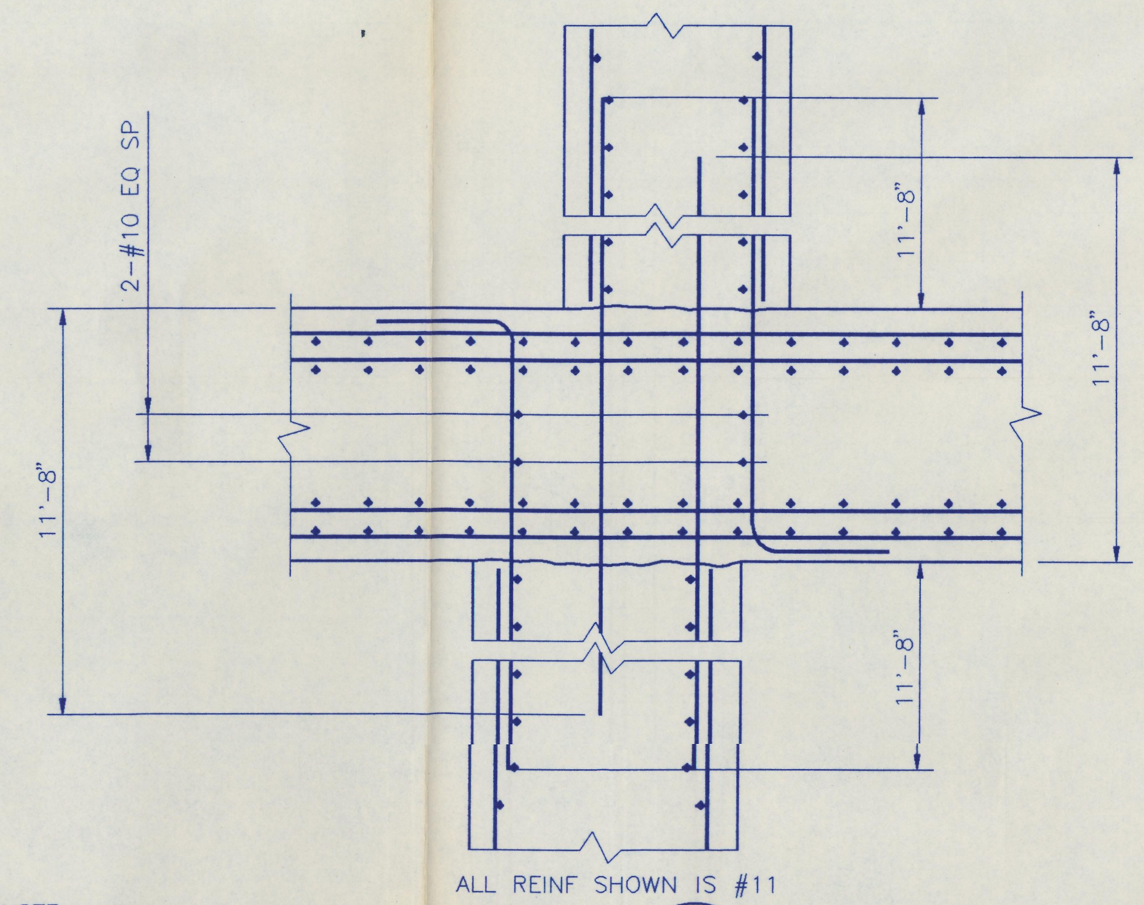

DETAIL 139
SCALE: NONE 117432

NOTE
VERTICAL WALL REINF SHOWN. DOWELS TO MATCH IN SIZE AND SPACING

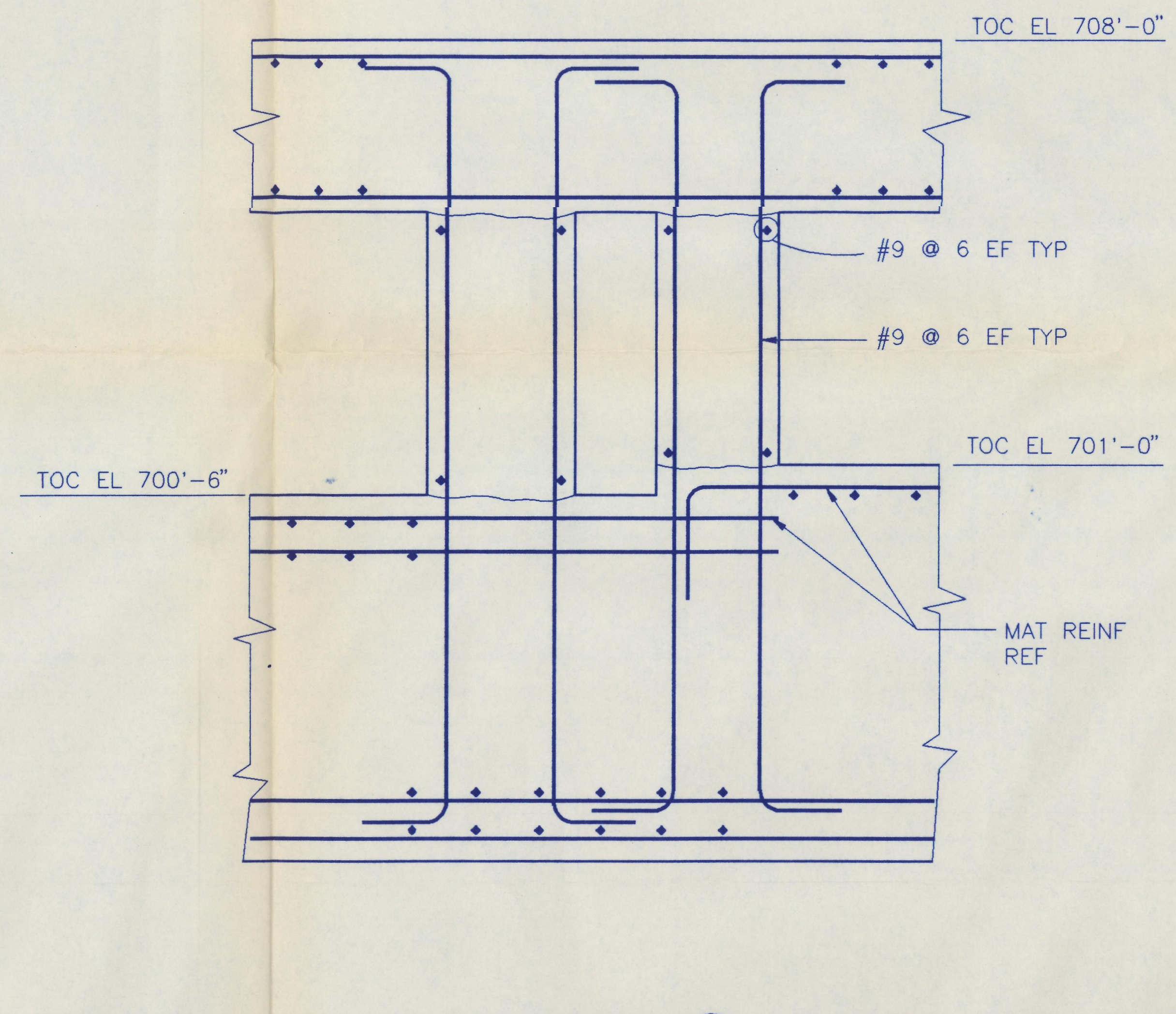

SECTION FL
SCALE: 1/2"=1'-0" 117431

FOR CLARIFICATIONS TO BID SCOPE REFER TO DRAWINGS H-2-117427, H-2-117428, AND H-2-117429.

DWG. NO.	DRAWING TITLE
H-2-117460	FIRST FLOOR CONFIG PLAN & DWG INDEX
H-2-117426	TUNNEL CONFIG PLAN & DWG INDEX

REFERENCE DRAWINGS

NEXT USED ON

QUALITY LEVEL I
SAFETY CLASS 1

REV NO.	DATE	REVISION DESCRIPTION	APPROVAL INITIALS
0	11/12/92	APPROVED FOR CONSTRUCTION OF BASE MAT ONLY	

CADFILE B118230A — CADCODE 2B:IBM:ACD2:10.C2:SS

ENGINEERING RELEASE
REV. ______ DATE ______
ERO. ______

U.S.DEPARTMENT OF ENERGY
Richland Field Office
DE – AC06–86RL10838

NOV 13 1992

FLUOR DANIEL, INC.
ADVANCED TECHNOLOGY DIVISION

STRUCTURAL
VIT BLDG
SECTIONS & DETAIL

PROJECT TITLE: HANFORD WASTE VITRIFICATION PLANT

PROJECT: B-595 — FLUOR CONTRACT NO. 8457 — CWBS NO. B210A
SCALE: SHOWN — BLDG. NO. 1 — INDEX NO.
DRAWN: A. IZURIETA 03/24/92
CLASSIFICATION: NONE — BY: NOT REQD
DRAWING NUMBER: H-2-118230 — SHEET 1 OF 1 — REV. 0

DISTRIBUTION CODE: 103 S133 ACAD
INITIALS: A.I.
DATE: 11/06/92

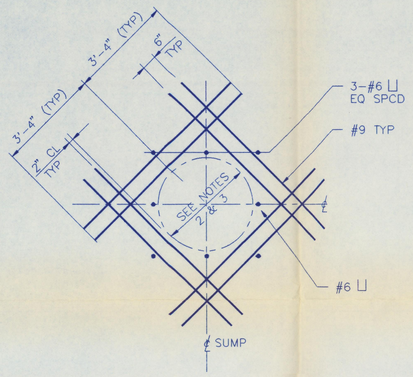

PLAN

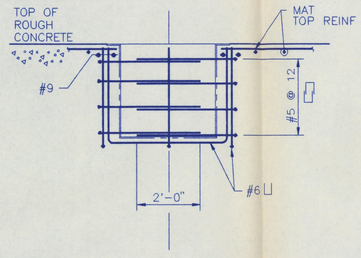

SECTION

DETAIL 141 117438

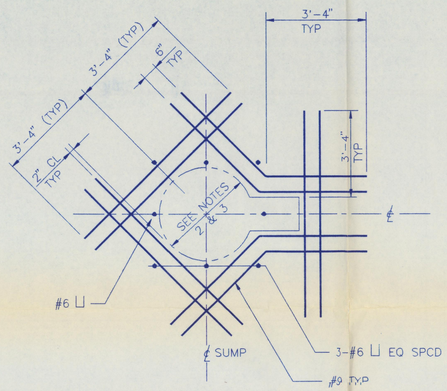

PLAN

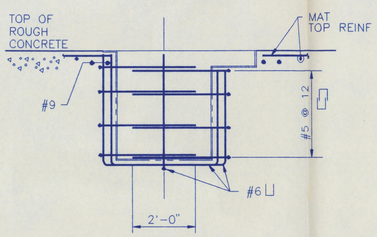

SECTION

DETAIL 142 117437 117438

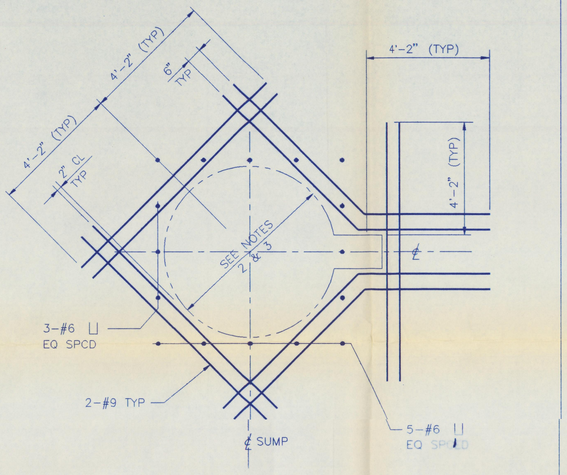

PLAN

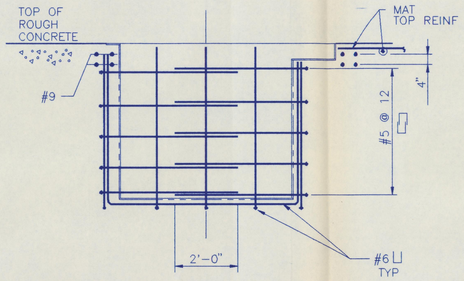

SECTION

DETAIL 143 117438

NOTES:

1. FOR GENERAL NOTES AND TYPICAL DETAILS SEE DRAWING H-2-117425.
2. FOR SUMP DETAILS SEE DRAWING H-2-118235 SHEET 1 THROUGH SHEET 4.
3. FOR ORIENTATION OF SUMPS SEE DRAWINGS H-2-117437 AND H-2-117438.

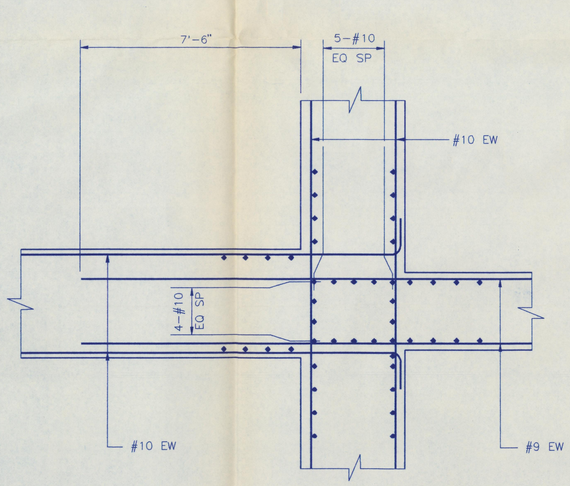

PLAN

NOTE:

WORK THIS DETAIL WITH "TYPICAL WALL INTERSECTION DETAIL" DWG 117425 SH 4. VERTICAL WALL REINFORCING SHOWN. DOWELS TO MATCH IN SIZE AND SPACING.

DETAIL 151 117432

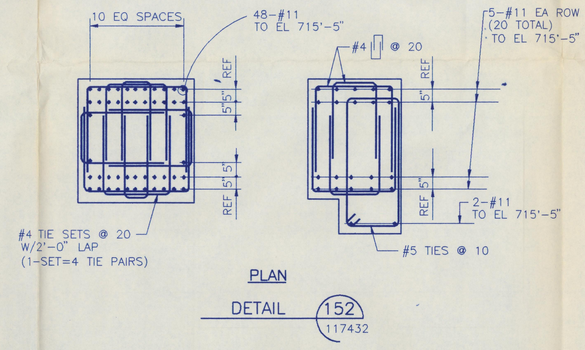

PLAN

DETAIL 152 117432

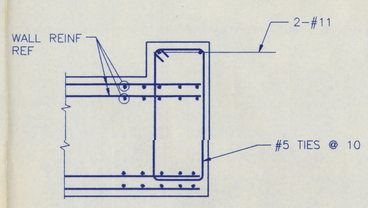

PLAN

DETAIL 153 117432

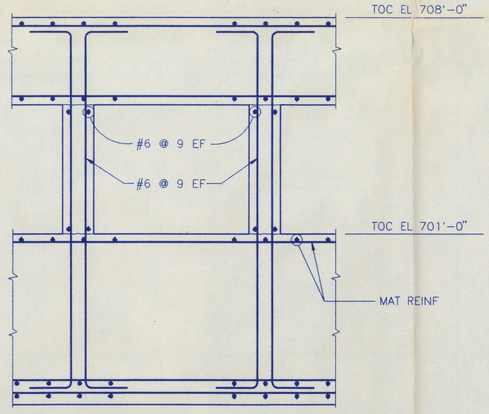

SECTION JB 117432 117438

FOR CLARIFICATIONS TO BID SCOPE REFER TO DRAWINGS H-2-117427, H-2-117428, AND H-2-117429.

H-2-117426	TUNNEL CONFIG PLAN & DWG INDEX
DWG. NO.	DRAWING TITLE
REFERENCE DRAWINGS	
NEXT USED ON	

QUALITY LEVEL 1
SAFETY CLASS 1

REV. NO.	DATE	REVISION DESCRIPTION	APPROVAL INITIALS
0	11/24/92	APPROVED FOR CONSTRUCTION OF BASE MAT ONLY	

CADFILE B118231A CADCODE 2B:IBM:ACD2:10.C2:SS

ENGINEERING RELEASE
REV: _____ DATE _____
ERO: _____

SIGNATURE	DATE
PROJ. DIR.	
G.A. MGR.	
INDEPENDENT SAFETY MGR.	
PROJECT MGR.	
SYSTEMS MGR.	
ENGINEERING MGR.	
SUPERVISOR	11/24/92
DESIGN ENGINEER	11/24/92
CHECKED	11/24/92
DRAWN A. IZURIETA	08/11/92

U.S. DEPARTMENT OF ENERGY
Richland Field Office
DE - AC06-86RL10838

NOV 13 1992

FLUOR DANIEL, INC.
ADVANCED TECHNOLOGY DIVISION

STRUCTURAL
VIT BLDG
SECTIONS & DETAILS

PROJECT TITLE: HANFORD WASTE VITRIFICATION PLANT

PROJECT	FLUOR CONTRACT NO.	CWBS NO.
B-595	8457	B210A

SCALE	BLDG. NO.	INDEX NO.
NONE	1	

CLASSIFICATION	BY	DRAWING NUMBER	SHEET	OF	REV.
NONE	NOT REQD	H-2-118231	1	1	0

2|1|0|A| H-2-1|1|8|2|3|1| 0 | 1 | 1 | A|F|C|

DISTRIBUTION CODE: 103 S134 ACAD INITIALS: A.I. DATE: 11/06/92

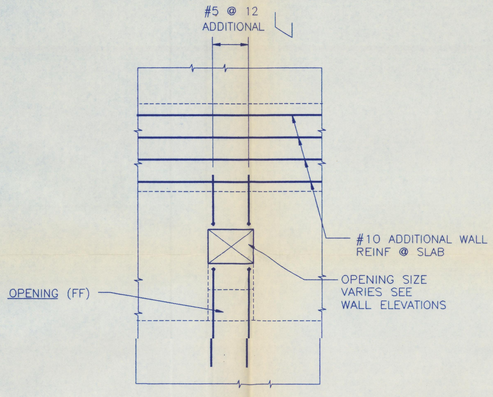

ELEVATION
DETAIL 32

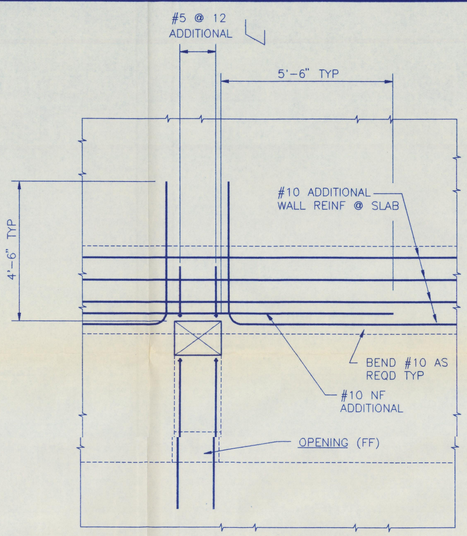

ELEVATION
DETAIL 33

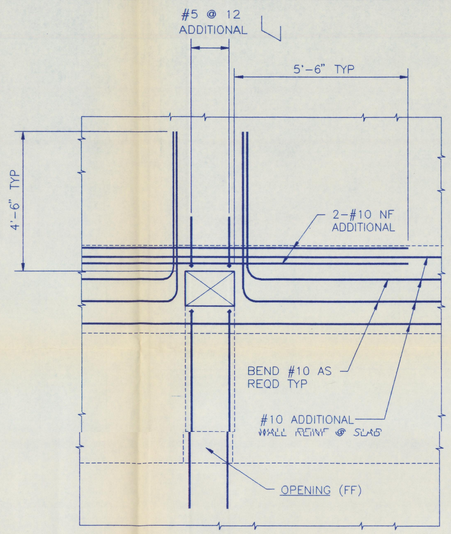

ELEVATION
DETAIL 34

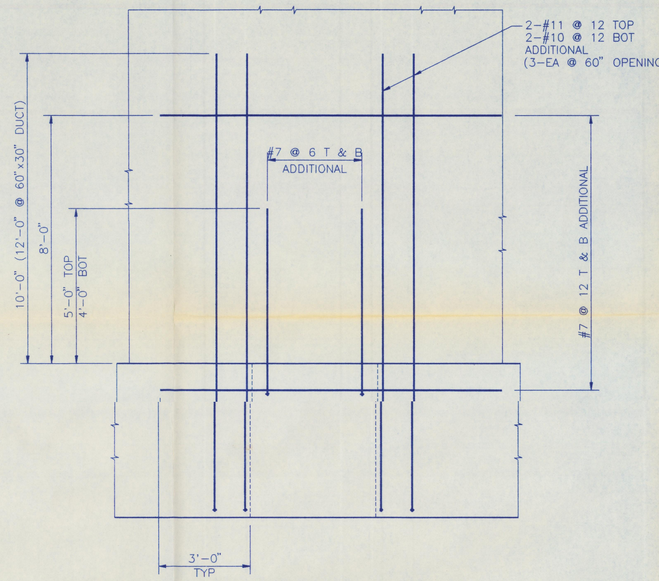

PLAN @ EL 708'-0"
SECTION BZ

NOTE:

1. FOR GENERAL NOTES AND TYPICAL DETAILS SEE DWG H-2-117425.

0 1 2 3 4 5 6 7 8 9 10
GRAPHIC SCALE
1/2" = 1'-0"

QUALITY LEVEL 1
SAFETY CLASS 1

REV NO.	DATE	REVISION DESCRIPTION	APPROVAL INITIALS
E	11/13/92	ISSUED FOR BID PURPOSES ONLY	

CADFILE B118232A | CADCODE 2B:IBM:ACD2:10.C2:SS

ENGINEERING RELEASE
REV. _____ DATE _____
ERO _____

SIGNATURE	DATE
PROJ. DIR.	
Q.A. MGR.	
INDEPENDENT SAFETY MGR.	
PROJECT MGR.	
SYSTEMS MGR.	
ENGINEERING MGR.	
SUPERVISOR	
DESIGN ENGINEER	
CHECKED	
DRAWN R. MCDOWELL	03/25/92

U.S. DEPARTMENT OF ENERGY
Richland Field Office
DE - AC06-86RL10838
NOV 13 1992

FLUOR DANIEL, INC.
ADVANCED TECHNOLOGY DIVISION

STRUCTURAL
VIT BLDG
SECTION & DETAILS

PROJECT TITLE: HANFORD WASTE VITRIFICATION PLANT

PROJECT	FLUOR CONTRACT NO.	CWBS NO.
B-595	8457	B210A

SCALE	BLDG. NO.	INDEX NO.
1/2" = 1'-0"	1	

CLASSIFICATION	BY	DRAWING NUMBER	SHEET	OF	REV.
NONE	NOT REQD	H-2-118232	1	3	E

DWG. NO.	DRAWING TITLE
H-2-117426	TUNNEL CONFIG PLAN & DWG INDEX

REFERENCE DRAWINGS
NEXT USED ON

2 1 0 A | H-2-1 1 8 2 3 2 | E | 1 | 3

DISTRIBUTION CODE: 103 S135 ACAD

INITIALS: A.I.
DATE: 11/06/92

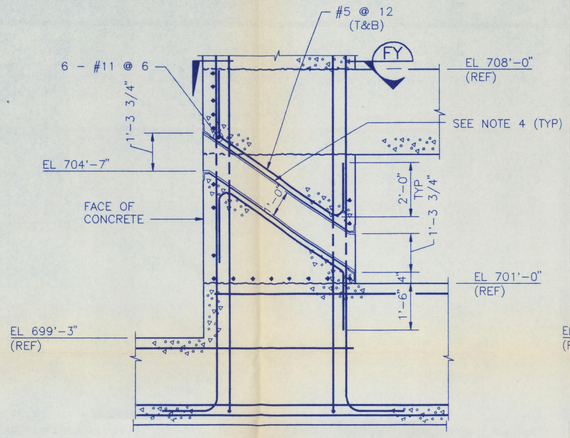

SECTION FQ
117959
117960
117963
117964

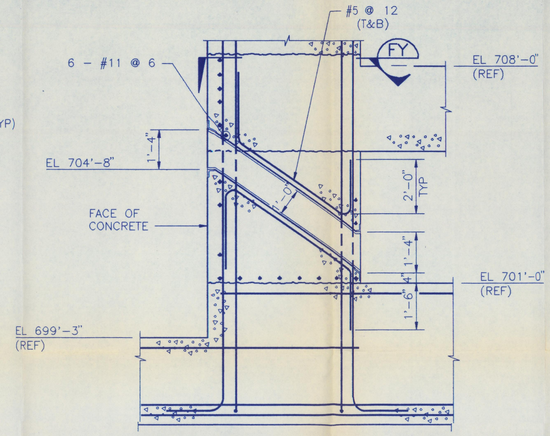

SECTION FR
117961
117965

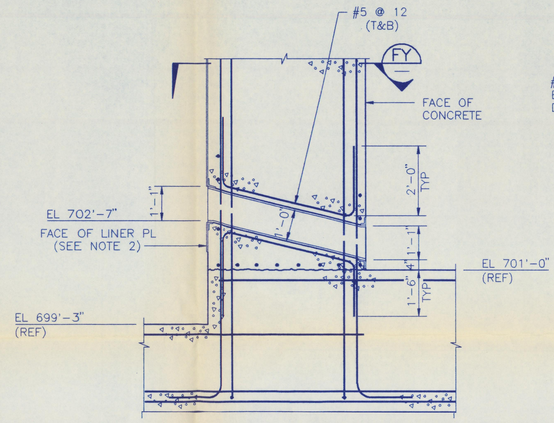

SECTION FS
117961
117965

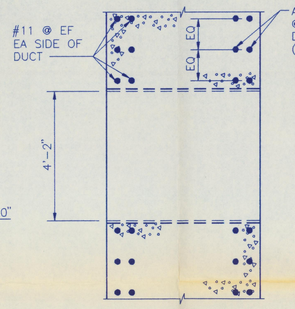

SECTION JX

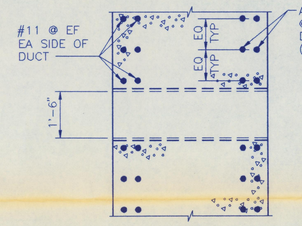

SECTION FW
118232
5

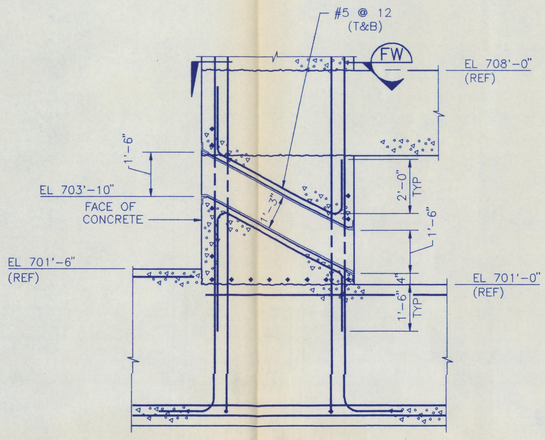

SECTION FT
117962
117966

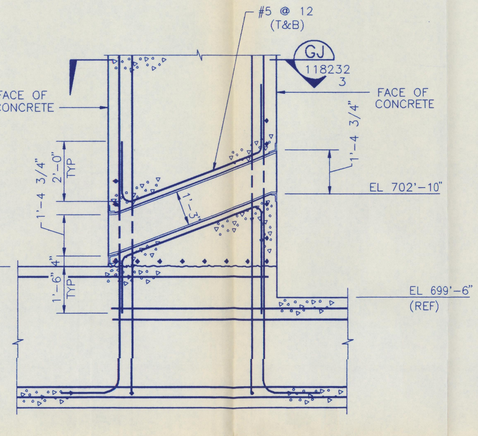

SECTION FU
117941
117945

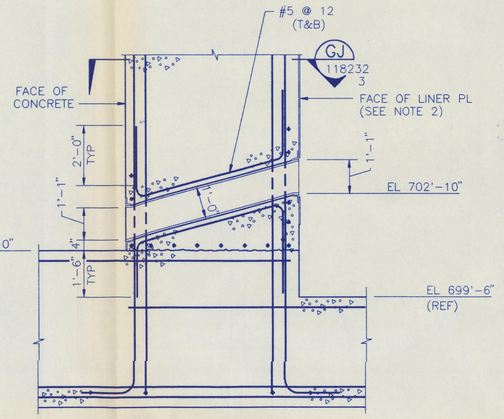

SECTION FV
117942
117946

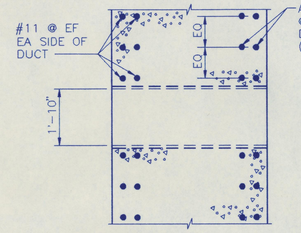

SECTION FY

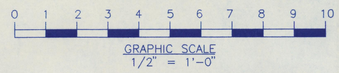

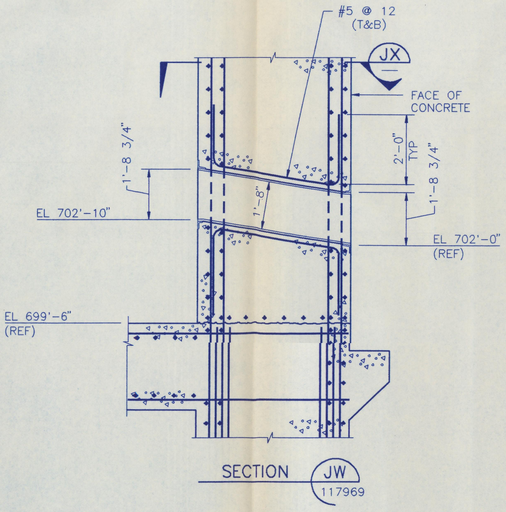

SECTION JW
117969

NOTES:

1. FOR GENERAL NOTES AND TYPICAL DETAILS SEE DRAWING H-2-117425.
2. FOR BRACING & LINER DETAILS SEE DRAWING H-2-118280 & H-2-118284.
3. STOP ADDITIONAL VERTICAL REINFORCING STEEL AT 715'-6".
4. FOR DUCT FABRICATION DETAILS SEE SECTION AV ON DRAWING H-2-118280.

QUALITY LEVEL 1
SAFETY CLASS 1

FOR CLARIFICATIONS TO BID SCOPE
REFER TO DRAWINGS H-2-117427,
H-2-117428, AND H-2-117429.

DWG. NO.	DRAWING TITLE
H-2-117426	TUNNEL CONFIG PLAN & DWG INDEX

REFERENCE DRAWINGS

NEXT USED ON

REV. NO.	DATE	REVISION DESCRIPTION	APPROVAL INITIALS
0	11/6/92	APPROVED FOR CONSTRUCTION OF BASE MAT ONLY	

CADFILE B118232B | CADCODE 2B:IBM:ACD2:10.C2:SS

ENGINEERING RELEASE
REV. _____ DATE _____
ERO. _____

	SIGNATURE	DATE
PROJ. DIR.		
Q.A. MGR.		
INDEPENDENT SAFETY MGR.		
PROJECT MGR.		
SYSTEMS MGR.		
ENGINEERING MGR.		
SUPERVISOR		11/11/92
DESIGN ENGINEER		11/11/92
CHECKED		11/11/92
DRAWN R. MCDOWELL		06/09/92
CLASSIFICATION NONE	BY NOT REQ'D	

U.S. DEPARTMENT OF ENERGY
Richland Field Office
DE - AC06-86RL10838
NOV 13 1992

FLUOR DANIEL, INC.
ADVANCED TECHNOLOGY DIVISION

STRUCTURAL
VIT BLDG
SECTIONS & DETAILS

PROJECT TITLE
HANFORD WASTE VITRIFICATION PLANT

PROJECT	FLUOR CONTRACT NO.	CWBS NO.
B-595	8457	B210A
SCALE 1/2" = 1'-0"	BLDG. NO. 1	INDEX NO.

DRAWING NUMBER H-2-118232 | SHEET 2 | OF 3 | REV. 0

DISTRIBUTION CODE: 103 S136 ACAD INITIALS: A.I. DATE: 11/06/92

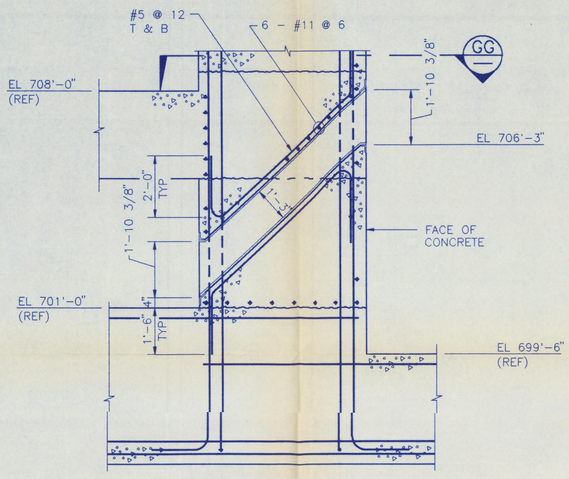

SECTION GA
117943
117947

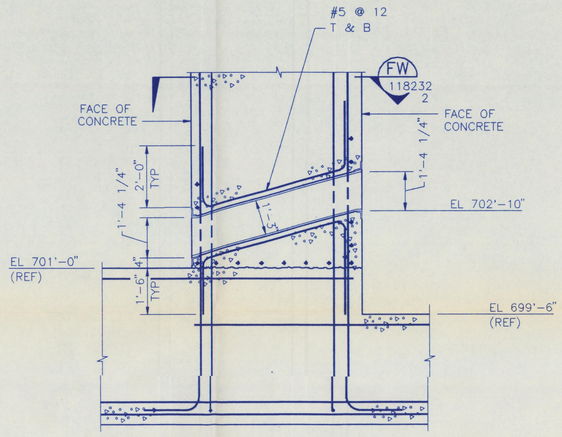

SECTION GB
117943
117947

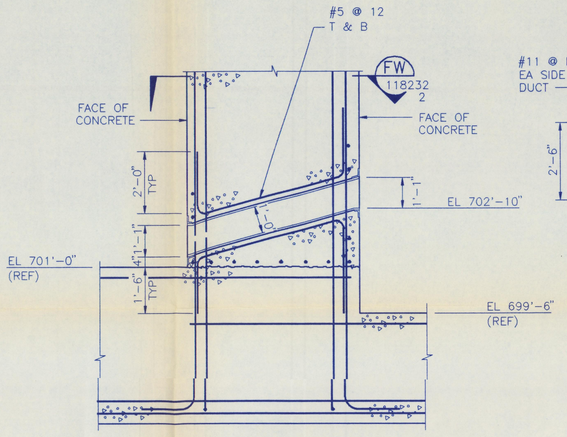

SECTION GC
117943
117947

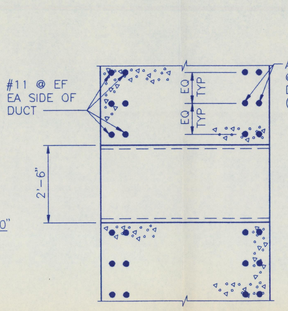

SECTION GG

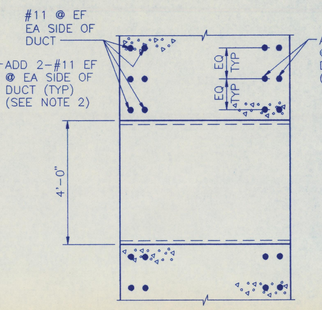

SECTION GH

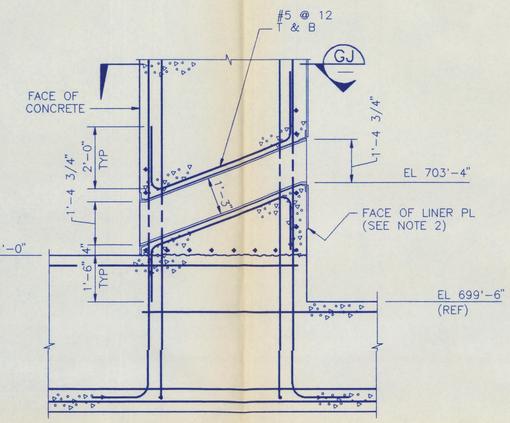

SECTION GD
117943
117944
117947
117948

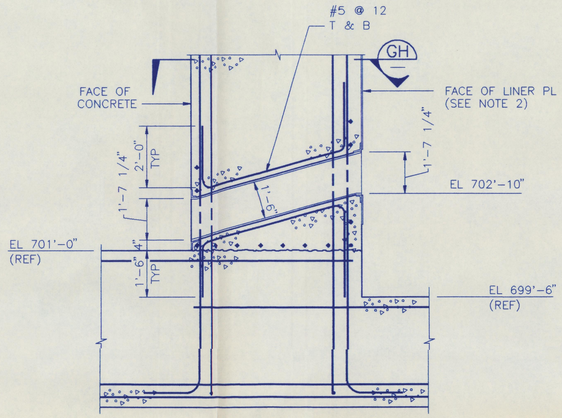

SECTION GE
117944
117948

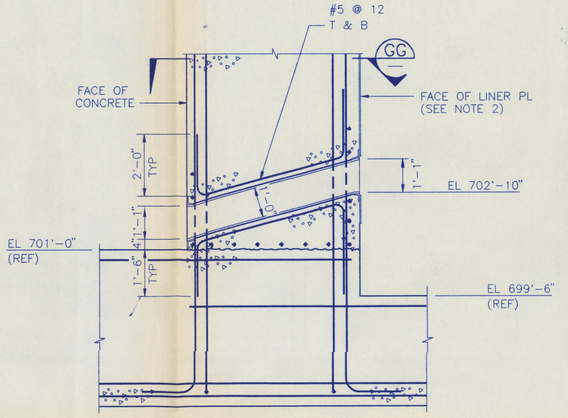

SECTION GF
117942
117946

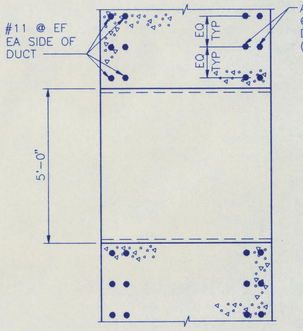

SECTION GJ
118232
2

0 1 2 3 4 5 6 7 8 9 10

GRAPHIC SCALE
1/2" = 1'-0"

NOTES:

1. FOR GENERAL NOTES AND TYPICAL DETAILS SEE DRAWING H-2-117425.
2. FOR ADDITIONAL NOTES SEE DRAWING H-2-118232 SH 2.

QUALITY LEVEL 1
SAFETY CLASS 1

REV NO.	DATE	REVISION DESCRIPTION	APPROVAL INITIALS
0	11/12/92	APPROVED FOR CONSTRUCTION OF BASE MAT ONLY	

CADFILE B118232C | CADCODE 2B:IBM:ACD2:10.C2:SS

ENGINEERING RELEASE
REV. _____ DATE _____
ERO _____

	SIGNATURE	DATE
PROJ. DIR.		
Q.A. MGR.		
INDEPENDENT SAFETY MGR.		
PROJECT MGR.		
SYSTEMS MGR.		
ENGINEERING MGR.		
SUPERVISOR	A Kinnear	9/11/92
DESIGN ENGINEER		11/11/92
CHECKED		11/11/92
DRAWN R. MCDOWELL		06/09/92

U.S.DEPARTMENT OF ENERGY
Richland Field Office
DE - AC06-86RL10838
NOV 13 1992

FLUOR DANIEL, INC.
ADVANCED TECHNOLOGY DIVISION

STRUCTURAL
VIT BLDG
SECTIONS & DETAILS

PROJECT TITLE: HANFORD WASTE VITRIFICATION PLANT

PROJECT	FLUOR CONTRACT NO.	CWBS NO.
B-595	8457	B210A
SCALE	BLDG. NO.	INDEX NO.
1/2"=1'-0"	1	

CLASSIFICATION	BY	DRAWING NUMBER	SHEET	OF	REV.
NONE	NOT REQ'D	H-2-118232	3	3	0

FOR CLARIFICATIONS TO BID SCOPE
REFER TO DRAWINGS H-2-117427, H-2-117428, AND H-2-117429.

DWG. NO.	DRAWING TITLE
H-2-117426	TUNNEL CONFIG PLAN & DWG INDEX
REFERENCE DRAWINGS	
NEXT USED ON	

2 1 0A H-2-118232 0 3 3 AFC

DISTRIBUTION CODE: 103 S137 ACAD INITIALS: A.I. DATE: 11/06/92

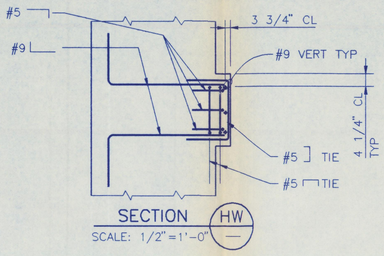

SECTION HW
SCALE: 1/2"=1'-0"

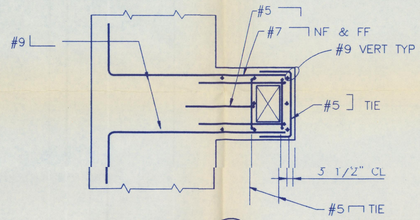

SECTION HX
SCALE: 1/2"=1'-0"

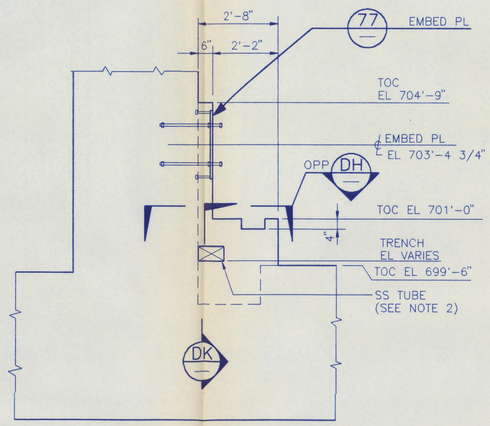

FORMING SECTION
CDC TRUNNION GUIDE "A" SUPPORT
SCALE: 1/2"=1'-0"

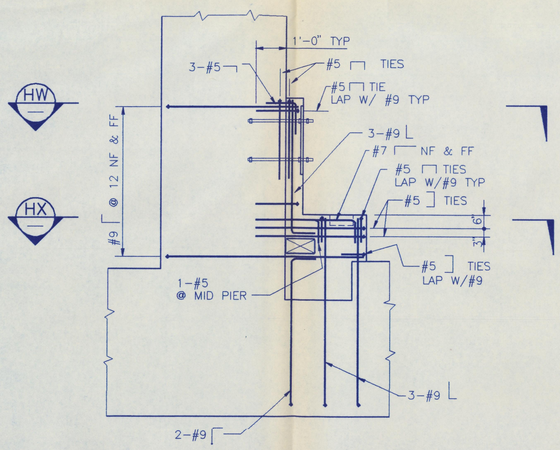

REINFORCING ELEVATION
CDC TRUNNION GUIDE SUPPORT

DETAIL 92
SCALE: 1/2"=1'-0" 117445

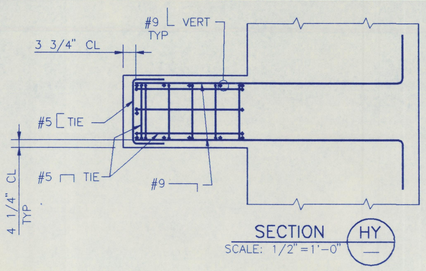

SECTION HY
SCALE: 1/2"=1'-0"

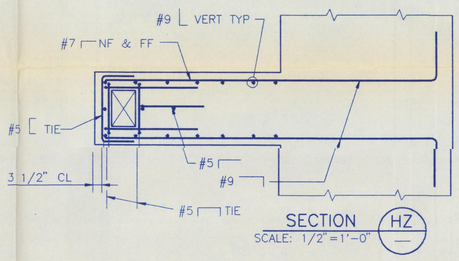

SECTION HZ
SCALE: 1/2"=1'-0"

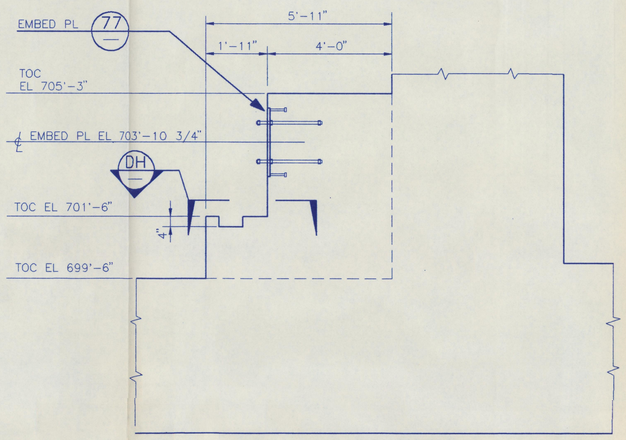

FORMING SECTION
CDC TRUNNION GUIDE "C" SUPPORT
SCALE: 1/2"=1'-0"

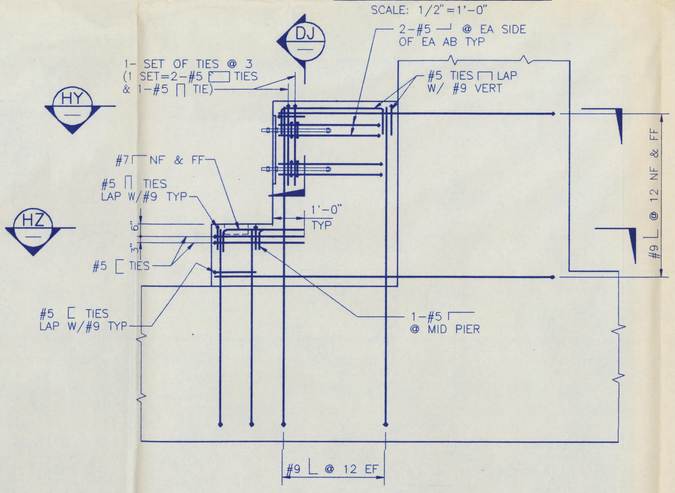

REINFORCING ELEVATION
CDC AND CPC TRUNNION GUIDE SUPPORT

DETAIL 93
SCALE: 1/2"=1'-0" 117445

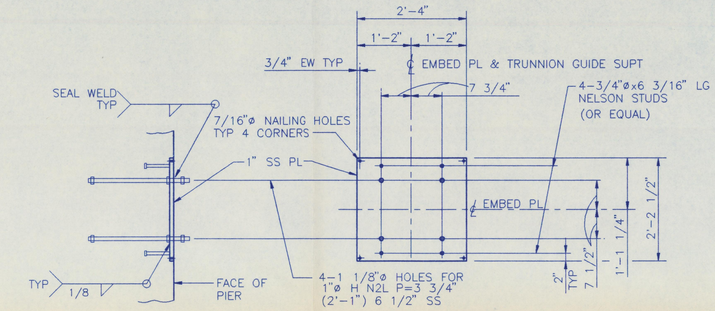

DETAIL 77
SCALE: 3/4"=1'-0" 118233 118234 2 118238 118281

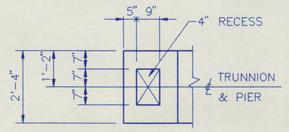

SECTION DH
SCALE: 1/2"=1'-0"

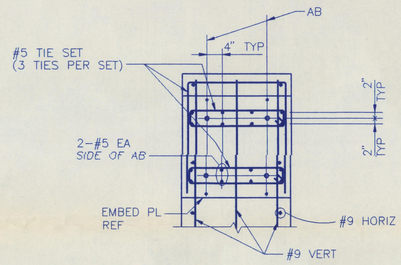

SECTION DJ
SCALE: NONE 118233 118234 2

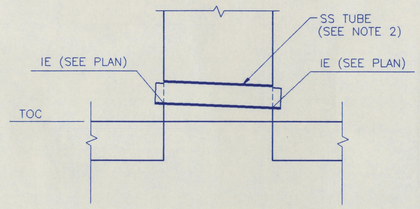

SECTION DK
SCALE: NONE 118233 118234 2

NOTES:

1. FOR GENERAL NOTES AND TYPICAL DETAILS SEE DRAWING H-2-117425.
2. FOR STAINLESS STEEL EMBEDDED ITEMS AND LINER PLATES SEE DRAWINGS H-2-118280 & H-2-118281.

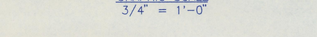

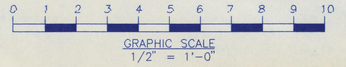

FOR CLARIFICATIONS TO BID SCOPE REFER TO DRAWINGS H-2-117427, H-2-117428, AND H-2-117429.

H-2-117426	TUNNEL CONFIG PLAN & DWG INDEX
DWG. NO.	DRAWING TITLE
REFERENCE DRAWINGS	
NEXT USED ON	

QUALITY LEVEL II
SAFETY CLASS 3

REV NO.	DATE	REVISION DESCRIPTION	APPROVAL INITIALS
0	11/6/92	APPROVED FOR CONSTRUCTION OF BASE MAT ONLY	

CADFILE B118233A | CADCODE 2B:IBM:ACD2:10.C2:SS

ENGINEERING RELEASE
REV. _____ DATE _____
ERO. _____

SIGNATURE	DATE
PROJ. DIR.	
Q.A. MGR.	
INDEPENDENT SAFETY MGR.	
PROJECT MGR.	
SYSTEMS MGR.	
ENGINEERING MGR.	
SUPERVISOR	4/2/92
DESIGN ENGINEER	11/11/92
CHECKED	11/11/92
DRAWN M. MURRAY	07/01/92

CLASSIFICATION: NONE | BY: NOT REQD

U.S. DEPARTMENT OF ENERGY
Richland Field Office
DE - AC06-86RL10838
NOV 13 1992

FLUOR DANIEL, INC.
ADVANCED TECHNOLOGY DIVISION

STRUCTURAL
VIT BLDG
SECTIONS & DETAILS

PROJECT TITLE: HANFORD WASTE VITRIFICATION PLANT

PROJECT	FLUOR CONTRACT NO.	CWBS NO.
B-595	8457	B210A
SCALE	BLDG. NO.	INDEX NO.
SHOWN	1	

DRAWING NUMBER H-2-118233 | SHEET 1 | OF 1 | REV. 0

2 1 0 A | H-2-1 1 8 2 3 3 | 0 1 1 | A F C
1 2 3 4 5 6 7 8 9 10 11 12 13 14 15 16 17 18 19 20 21 22 23 24 25 26 27 28 29 30 31 32 33 34 35 36 37 38 39 40 41 42 43 44 45 46 47 48 49 50 51 52 | 77 78 79 80

DISTRIBUTION CODE: 103 S138 ACAD INITIALS: A.I. DATE: 11/06/92

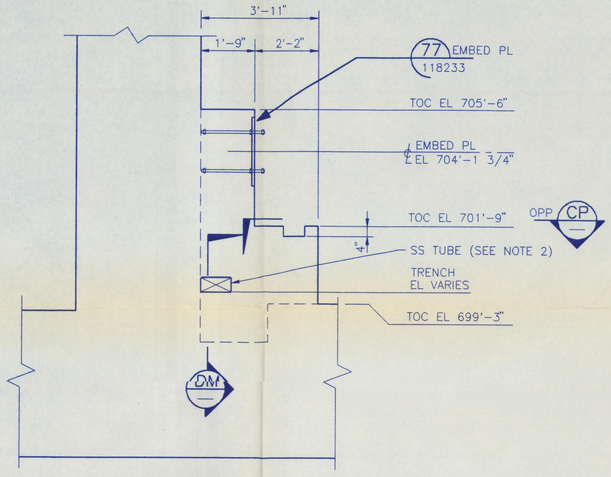

FORMING SECTION

CPC TRUNNION GUIDE "A" SUPPORT

NOTE:
FOR REINFORCING AND ADDITIONAL SECTIONS AND DETAILS SEE DET 93/118233 SIM

DETAIL 94
SCALE: 1/2"=1'-0"
117445
117448
117451

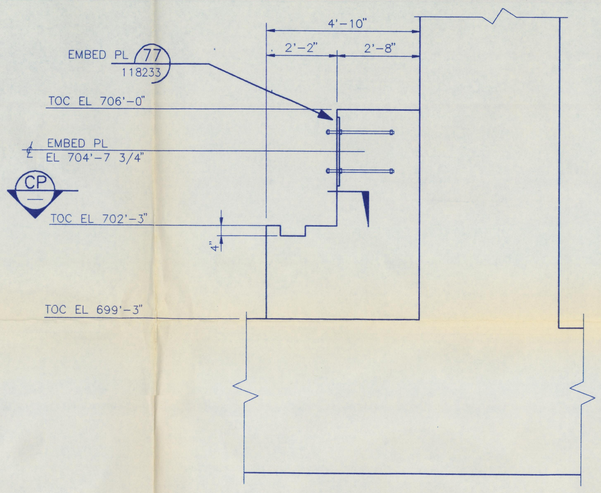

FORMING SECTION

CPC TRUNNION GUIDE "A" SUPPORT

NOTE:
FOR REINFORCING AND ADDITIONAL SECTIONS AND DETAILS SEE DET 93/118233 SIM

DETAIL 95
SCALE: 1/2"=1'-0"
117445
117448
117451

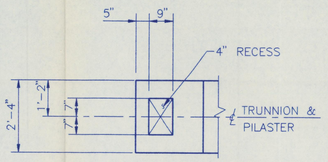

SECTION CP
SCALE: 1/2"=1'-0"
118238
118234
1

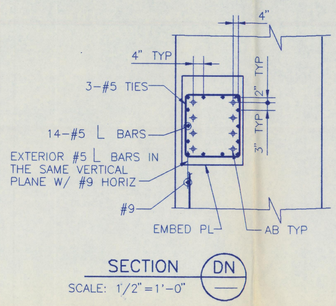

SECTION DN
SCALE: 1/2"=1'-0"

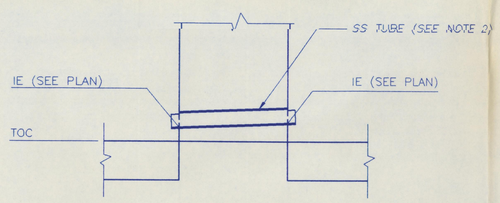

SECTION DM
SCALE: NONE
118238
118234
1

NOTES:

1. FOR GENERAL NOTES AND TYPICAL DETAILS SEE DRAWING H-2-117425.
2. FOR STAINLESS STEEL EMBEDDED ITEMS AND LINER PLATES SEE DRAWINGS H-2-118280 AND H-2-118281.

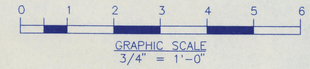

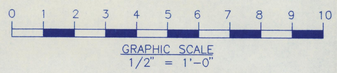

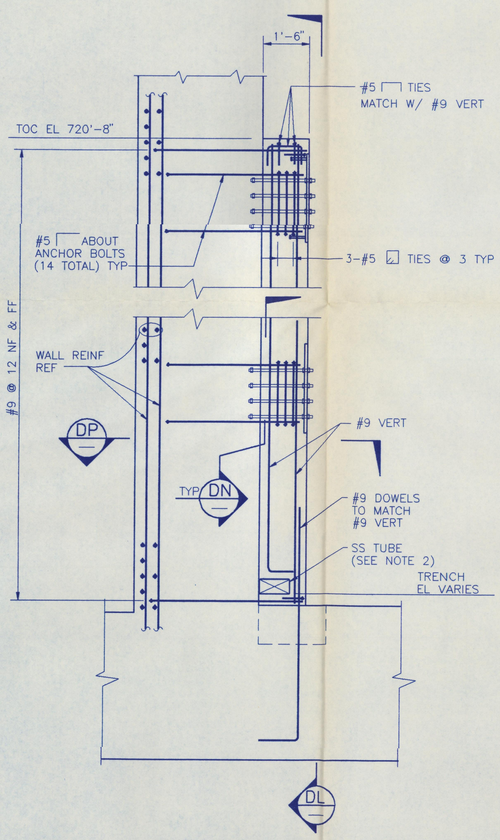

DETAIL 96
SCALE: 1/2"=1'-0"
117445

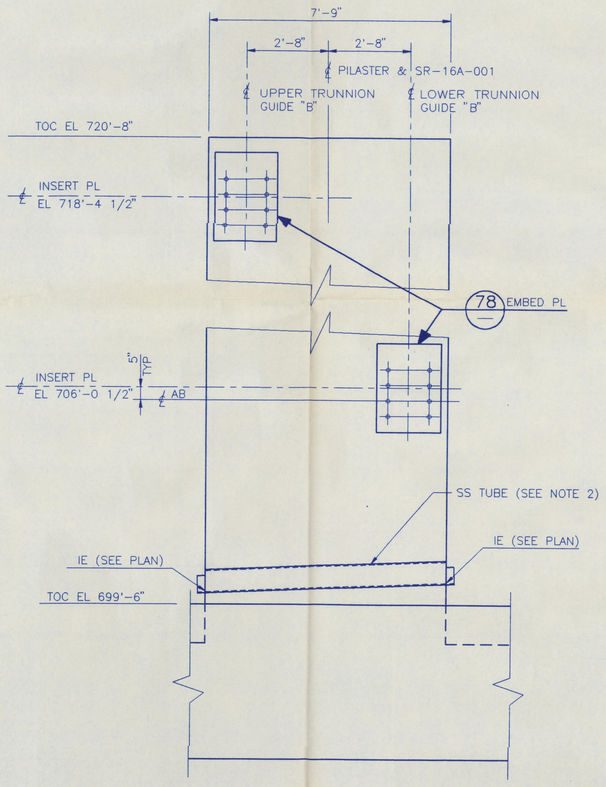

SECTION DL
SCALE: 1/2"=1'-0"

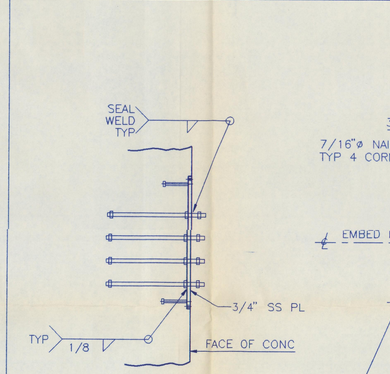

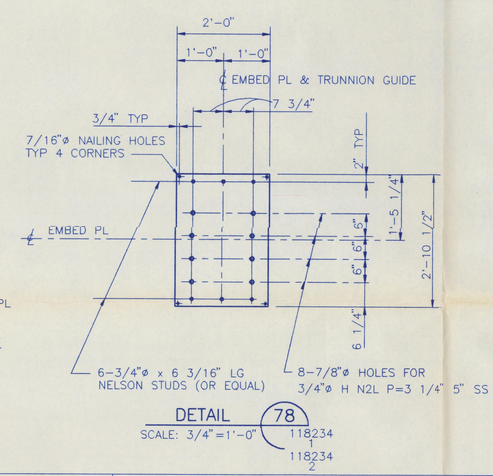

DETAIL 78
SCALE: 3/4"=1'-0"
118234
1
118234
2

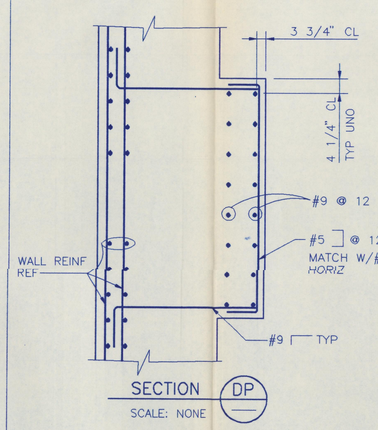

SECTION DP
SCALE: NONE

FOR CLARIFICATIONS TO BID SCOPE REFER TO DRAWINGS H-2-117427, H-2-117428, AND H-2-117429.

DWG. NO.	DRAWING TITLE
H-2-117426	TUNNEL CONFIG PLAN & DWG INDEX
REFERENCE DRAWINGS	
NEXT USED ON	

QUALITY LEVEL II
SAFETY CLASS 3

REV. NO.	DATE	REVISION DESCRIPTION	APPROVAL INITIALS
0	11/12/92	APPROVED FOR CONSTRUCTION OF BASE MAT ONLY	

CADFILE B118234A CADCODE 2B:IBM:ACD2:10.C2:SS

ENGINEERING RELEASE
REV. _____ DATE _____
ERO. _____

	SIGNATURE	DATE
PROJ. DIR.		
G.A. MGR.		
INDEPENDENT SAFETY MGR.		
PROJECT MGR		
SYSTEMS MGR.		
ENGINEERING MGR.		
SUPERVISOR		11/4/92
DESIGN ENGINEER		11/4/92
CHECKED		11/4/92
DRAWN M. MURRAY		07/01/92

CLASSIFICATION: NONE — BY: NOT REQD

U.S. DEPARTMENT OF ENERGY
Richland Field Office
DE - AC06-86RL10838
NOV 13 1992

FLUOR DANIEL, INC.
ADVANCED TECHNOLOGY DIVISION

STRUCTURAL
VIT BLDG
SECTION AND DETAILS

PROJECT TITLE: HANFORD WASTE VITRIFICATION PLANT

PROJECT	FLUOR CONTRACT NO.	CWBS NO.
B-595	8457	B210A
SCALE: SHOWN	BLDG. NO. 1	INDEX NO.

DRAWING NUMBER	SHEET	OF	REV.
H-2-118234	1	4	0

2|10A | H-2-118234 | 0 | AFC

DISTRIBUTION CODE: 103

S139 ACAD

INITIALS: A.I.
DATE: 11/06/92

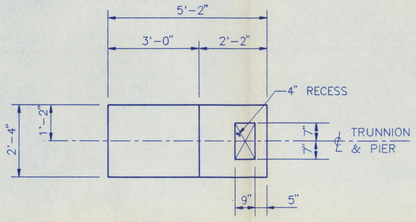

PLAN

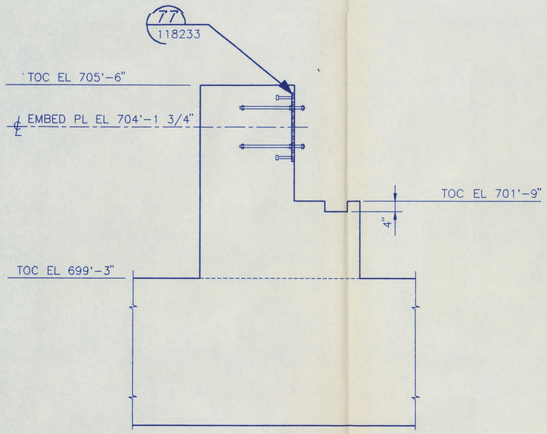

FORMING SECTION
CPC TRUNNION GUIDE "A" SUPPORT

DETAIL 97 / 117445

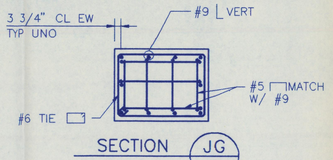

SECTION JG

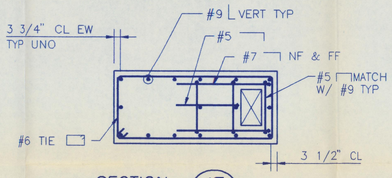

SECTION JF

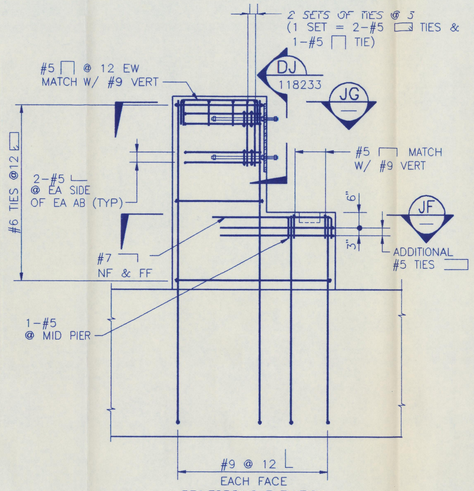

REINFORCING ELEVATION
CPC TRUNNION GUIDE SUPPORT

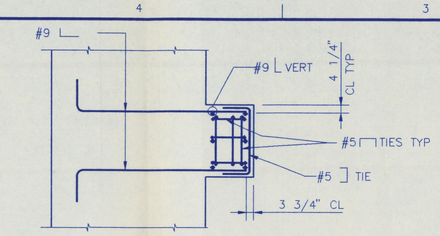

SECTION JE

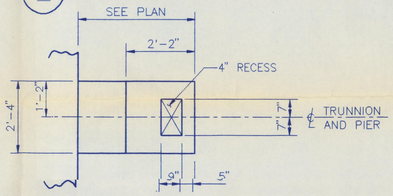

PLAN

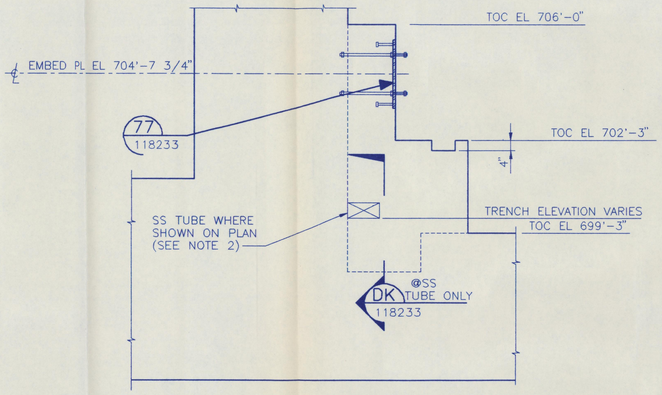

FORMING SECTION
CPC TRUNNION GUIDE "A" SUPPORT

DETAIL 98 / 117445

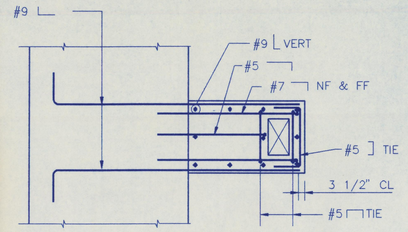

SECTION JD

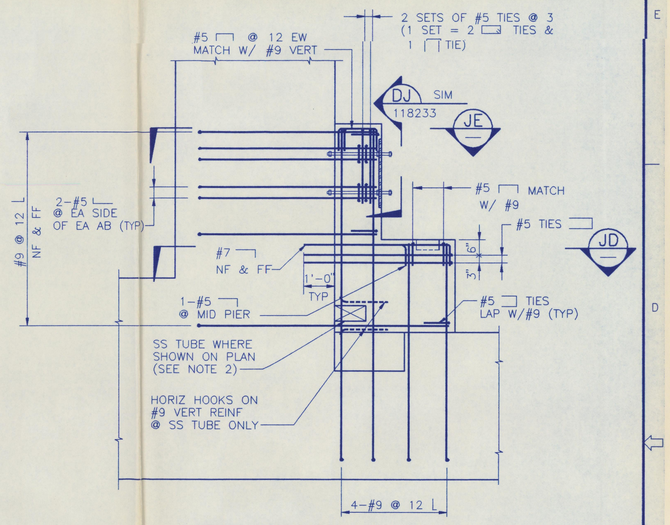

REINFORCING ELEVATION
CPC TRUNNION GUIDE SUPPORT

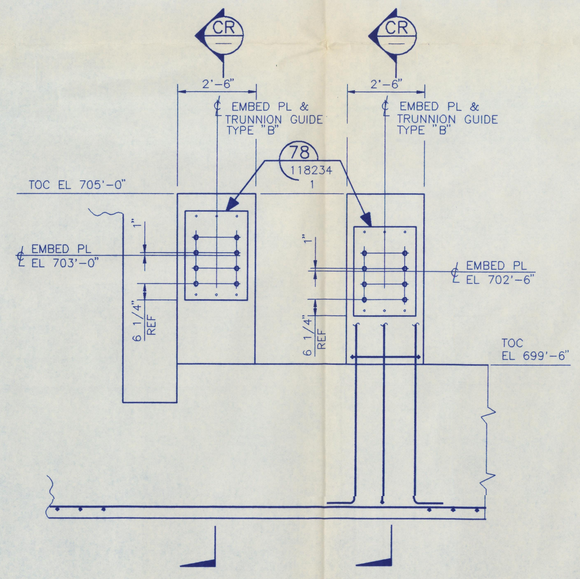

DETAIL 99 / 117451

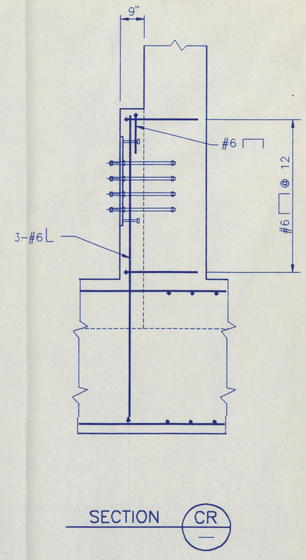

SECTION CR

NOTES:

1. FOR GENERAL NOTES AND TYPICAL DETAILS SEE DRAWING H-2-117425.
2. FOR STAINLESS STEEL EMBED ITEMS AND LINER PLATES SEE DRAWINGS H-2-118280 AND H-2-118281.

FOR CLARIFICATIONS TO BID SCOPE REFER TO DRAWINGS H-2-117427, H-2-117428, AND H-2-117429.

H-2-117426	TUNNEL CONFIG PLAN & DWG INDEX
DWG. NO.	DRAWING TITLE
REFERENCE DRAWINGS	
NEXT USED ON	

0 1 2 3 4 5 6 7 8 9 10

GRAPHIC SCALE
1/2" = 1'-0"

QUALITY LEVEL II
SAFETY CLASS 3

REV. NO.	DATE	REVISION DESCRIPTION	APPROVAL INITIALS
0	11/11/92	APPROVED FOR CONSTRUCTION OF BASE MAT ONLY	

CADFILE B118234B | CADCODE 2B:IBM:ACD2:10.C2:SS

ENGINEERING RELEASE
REV. _____ DATE _____
ERO _____

SIGNATURE	DATE
PROJ. DIR.	
Q.A. MGR.	
INDEPENDENT SAFETY MGR.	
PROJECT MGR.	
SYSTEMS MGR.	
ENGINEERING MGR.	
SUPERVISOR	11/11/92
DESIGN ENGINEER	11/11/92
CHECKED	11/11/92
DRAWN M. MURRAY	07/01/92

CLASSIFICATION: NONE | BY: NOT REQD

U.S. DEPARTMENT OF ENERGY
Richland Field Office
DE - AC06-86RL10838

NOV 13 1992

FLUOR DANIEL, INC.
ADVANCED TECHNOLOGY DIVISION

STRUCTURAL
VIT BLDG
SECTIONS & DETAILS

PROJECT TITLE: HANFORD WASTE VITRIFICATION PLANT

PROJECT	FLUOR CONTRACT NO.	CWBS NO.
B-595	8457	B210A

SCALE	BLDG. NO.	INDEX NO.
1/2" = 1'-0"	1	

DRAWING NUMBER: H-2-118234 | SHEET 2 | OF 4 | REV. 0

DISTRIBUTION CODE: 103 | S140 ACAD | INITIALS: A.I. | DATE: 11/06/92

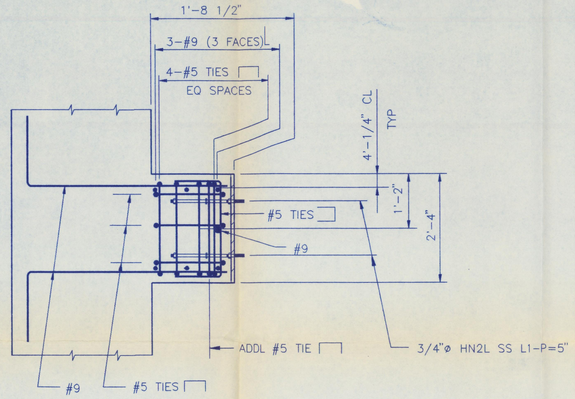

PLAN

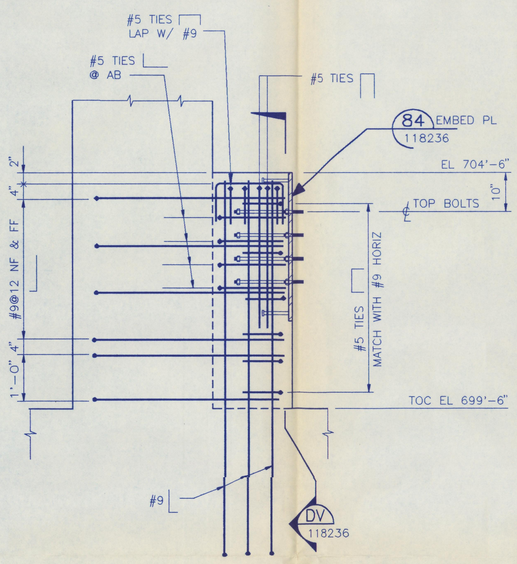

SECTION

DETAIL 38
SCALE: NONE 117451

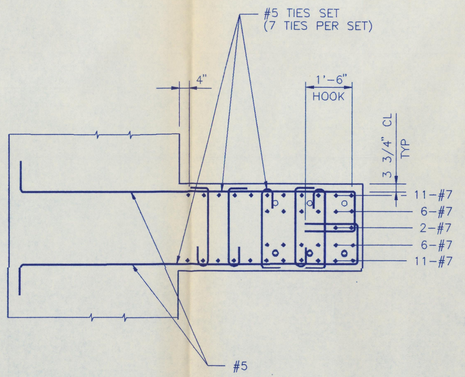

SECTION BY

SCALE: NONE

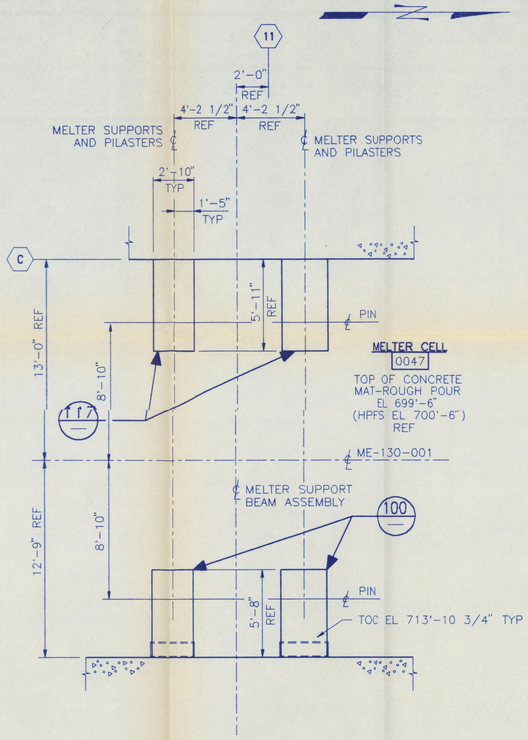

PARTIAL PLAN

DETAIL 39
SCALE: 1/4"=1'-0" 117448

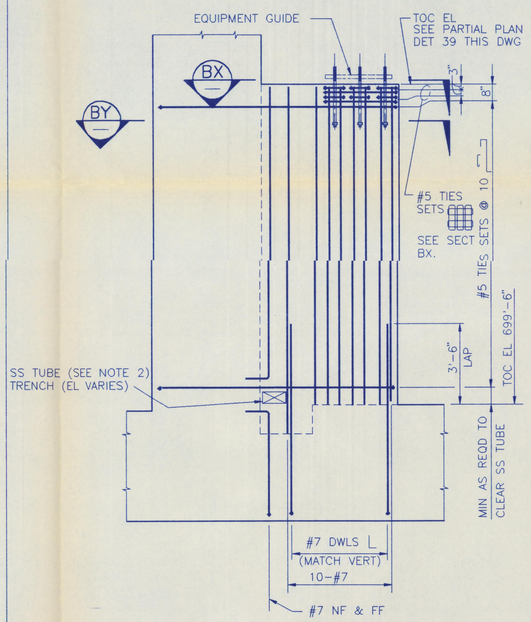

DETAIL 100
SCALE: 3/8"=1'-0"

NOTES:

1. FOR GENERAL NOTES AND TYPICAL DETAILS SEE DRAWING H-2-117425.
2. FOR STAINLESS STEEL EMBEDDED ITEMS AND LINER PLATES SEE DRAWINGS H-2-118280 AND H-2-118281.

0 1 2 3 4 5 6 7 8 9 10 11 12 13
GRAPHIC SCALE
3/8" = 1'-0"

0 1 2 3 4 5 10 15 20
GRAPHIC SCALE
1/4" = 1'-0"

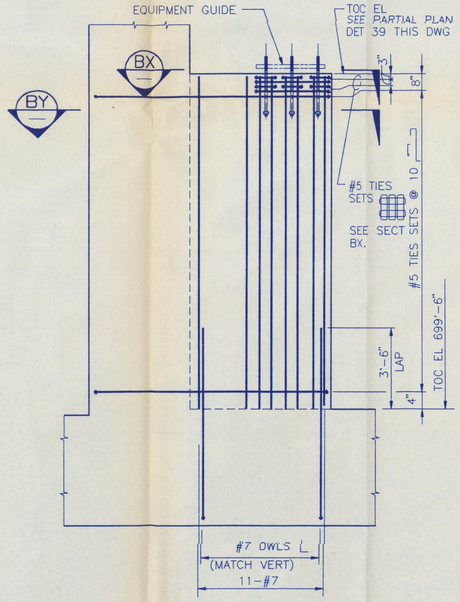

DETAIL 117
SCALE: 3/8"=1'-0"

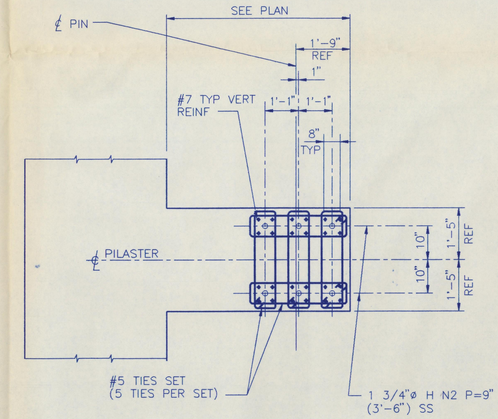

SECTION BX

SCALE: NONE

FOR CLARIFICATIONS TO BID SCOPE REFER TO DRAWINGS H-2-117427, H-2-117428, AND H-2-117429.

H-2-117426	TUNNEL CONFIG PLAN & DWG INDEX
DWG. NO.	DRAWING TITLE
REFERENCE DRAWINGS	
NEXT USED ON	

QUALITY LEVEL 1
SAFETY CLASS 3

REV. NO.	DATE	REVISION DESCRIPTION	APPROVAL INITIALS
0	11/12/92	APPROVED FOR CONSTRUCTION OF BASE MAT ONLY	

CADFILE B118234C | CADCODE 2B:IBM:ACD2:10.C2:SS

ENGINEERING RELEASE
REV. _____ DATE _____
ERO. _____

SIGNATURE	DATE
PROJ. DIR.	
G.A. MGR.	
INDEPENDENT SAFETY MGR.	
PROJECT MGR.	
SYSTEMS MGR.	
ENGINEERING MGR.	
SUPERVISOR R.J. Wilson	11/11/92
DESIGN ENGINEER	
CHECKED P.D. Wingfield	11/11/92
DRAWN A. IZURIETA	03/16/92

U.S. DEPARTMENT OF ENERGY
Richland Field Office
DE - AC06-86RL10838

FLUOR DANIEL, INC. NOV 13 1992
ADVANCED TECHNOLOGY DIVISION

STRUCTURAL
VIT BLDG
SECTIONS & DETAILS

PROJECT TITLE: HANFORD WASTE VITRIFICATION PLANT

PROJECT	FLUOR CONTRACT NO.	CWBS NO.
B-595	8457	B210A

SCALE	BLDG. NO.	INDEX NO.
SHOWN	1	

CLASSIFICATION	BY	DRAWING NUMBER	SHEET	OF	REV.
NONE	NOT REQD	H-2-118234	3	4	0

DISTRIBUTION CODE: 103 S141 ACAD INITIALS: A.I. DATE: 11/06/92

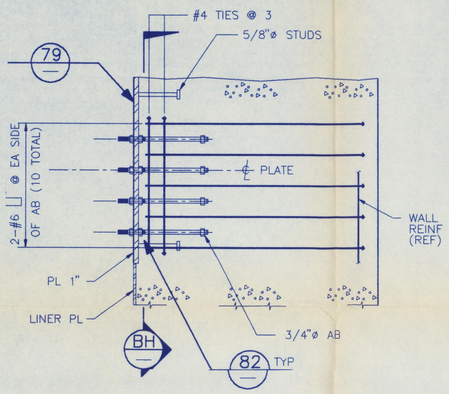

SECTION DZ
SCALE: 1"=1'-0" 117978

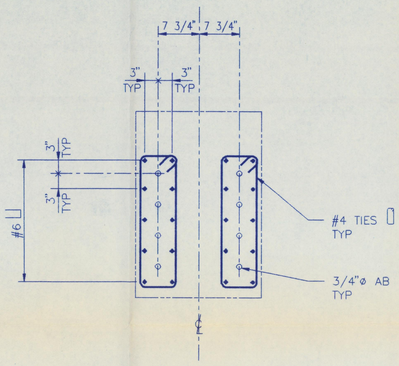

SECTION BH
SCALE: 1"=1'-0"

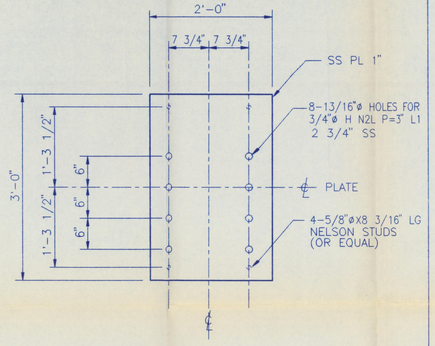

DETAIL 79
SCALE: 1"=1'-0"

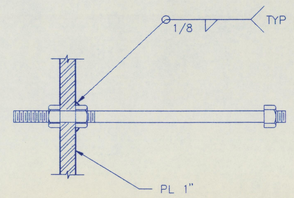

DETAIL 82
SCALE: NONE

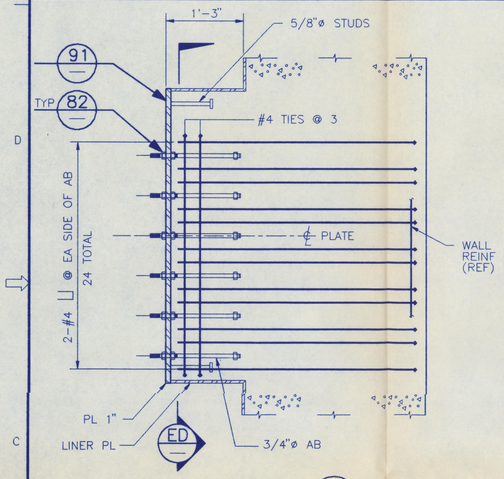

SECTION EA
SCALE: 1"=1'-0" 117977

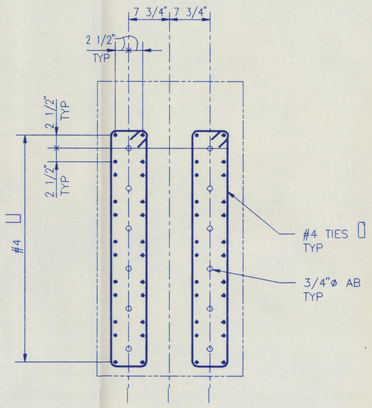

SECTION ED
SCALE: 1"=1'-0"

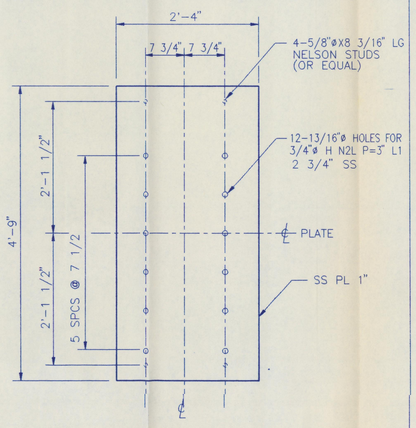

DETAIL 91
SCALE: 1"=1'-0"

NOTE:

FOR GENERAL NOTES AND TYPICAL DETAILS SEE DRAWING H-2-1174254.

GRAPHIC SCALE
0 1 2 3 4 5
1" = 1'-0"

QUALITY LEVEL II
SAFETY CLASS 3

REV NO.	DATE	REVISION DESCRIPTION	APPROVAL INITIALS
E	11/6/92	ISSUED FOR BID PURPOSES ONLY	

CADFILE B118234D | CADCODE 2B:IBM:ACD2:10.C2:SS

ENGINEERING RELEASE
REV. _____ DATE _____
ERO. _____

	SIGNATURE	DATE
PROJ. DIR.		
Q.A. MGR.		
INDEPENDENT SAFETY MGR.		
PROJECT MGR.		
SYSTEMS MGR.		
ENGINEERING MGR.		
SUPERVISOR		
DESIGN ENGINEER		
CHECKED		
DRAWN	A. IZURIETA	03/16/92

U.S. DEPARTMENT OF ENERGY
Richland Field Office
DE - AC06-86RL10838
NOV 13 1992

FLUOR DANIEL, INC.
ADVANCED TECHNOLOGY DIVISION

STRUCTURAL
VIT BLDG
SECTIONS & DETAILS

PROJECT TITLE: HANFORD WASTE VITRIFICATION PLANT

PROJECT	FLUOR CONTRACT NO.	OWBS NO.
B-595	8457	B210A

SCALE	BLDG. NO.	INDEX NO.
SHOWN	1	

CLASSIFICATION: NONE | BY: NOT REQD

DRAWING NUMBER	SHEET	OF	REV.
H-2-118234	4	4	E

DWG. NO.	DRAWING TITLE
H-2-117426	TUNNEL CONFIG PLAN & DWG INDEX

REFERENCE DRAWINGS

NEXT USED ON

2 1 0 A | H-2-1 1 8 2 3 4 | E | 4 | 4

DISTRIBUTION CODE: 103 S142 ACAD INITIALS: A.I. DATE: 11/06/92