1243699
(0071638H)

BHI-01173
Rev. 1

Auditable Safety Analysis for Surveillance and Maintenance of the 241-CX Tank System

Prepared for the U.S. Department of Energy, Richland Operations Office
Office of Environmental Restoration

Submitted by: Bechtel Hanford, Inc.

RECEIVED
APR 03 2017
EDMC

TRADEMARK DISCLAIMER
Reference herein to any specific commercial product, process, or service by trade name, trademark, manufacturer, or otherwise, does not necessarily constitute or imply its endorsement, recommendation, or favoring by the United States Government or any agency thereof or its contractors or subcontractors.

This report has been reproduced from the best available copy.
Available in paper copy and microfiche.

Available for a processing fee to U.S. Department of Energy and its contractors from:
U.S. Department of Energy
Office of Scientific and Technical Information
P.O. Box 62
Oak Ridge, TN 37831-0062
(865) 576-8401
fax: (865) 576-5728
email: reports@adonis.osti.gov
online ordering: http://www.doe.gov/bridge

Available for sale to the public, in paper, from:
U.S. Department of Commerce
National Technical Information Service
5285 Port Royal Road
Springfield, VA 22161
(800) 553-6847
fax: (703) 605.6900
email: orders@ntis.fedworld.gov
online ordering: http://www.ntis.gov/ordering.htm

Printed in the United States of America

DISCLM-5.CHP (11/99)

BHI-01173
Rev. 1
OU: N/A
TSD: N/A
ERA: N/A

APPROVAL PAGE

Title: Auditable Safety Analysis for Surveillance and Maintenance of the 241-CX Tank System

Approval: J. J. McGuire, S&M Project Manager

Signature

9/26/00
Date

DOE Approval: CCN 064026

The approval signature on this page indicates that this document has been authorized for information release to the public through appropriate channels. No other forms or signatures are required to document this information release.

BHI-DIS SEP 27 2000

BHI-01173
Rev. 1

Auditable Safety Analysis for Surveillance and Maintenance of the 241-CX Tank System

Authors

V. J. Cuneo
Bechtel Hanford, Inc.

W. J. Adam
CH2M Hill

C. Whalen
Frankie Friends and Associates

Date Published

September 2000

TABLE OF CONTENTS

1.0 INTRODUCTION 1-1

1.1 PURPOSE 1-1

1.2 DOCUMENT ORGANIZATION 1-2

1.3 AUTHORIZED ACTIVITIES 1-2

1.4 CONFIGURATION CONTROL 1-2

1.5 SAFETY SUMMARY 1-2

1.6 HAZARD CLASSIFICATION 1-3

2.0 BACKGROUND 2-1

2.1 FACILITY HISTORY 2-1

2.1.1 Mission of 241-CX-Tank System 2-1
2.1.2 Mission of Hot Semiworks/Strontium Semiworks 2-1
2.1.3 Decontamination and Decommissioning of Strontium Semiworks Complex 2-2
2.1.4 History and Decommissioning of Tank 241-CX-70 2-3
2.1.5 History and Decommissioning of Tank 241-CX-71 2-3
2.1.6 History and Decommissioning of Tank 241-CX-72 2-4
2.1.7 1988 Radiological Investigation/Evaluation of Tank 241-CX-72 2-4
2.1.8 241-CX-72 Tank Grout Removal 2-5
2.1.9 Disposition of 241-CX Tank System 2-5
2.1.10 Permits 2-6

2.2 FACILITY DESCRIPTION 2-6

2.2.1 241-CX-70 Tank 2-6
2.2.2 241-CX-71 Tank 2-6
2.2.3 Tank 241-CX-72, Vault, and Greenhouse 2-7
2.2.4 215-C Gas Preparation Building 2-7
2.2.5 276-C Solvent Handling Factility 2-8

2.3 SURVEILLANCE AND MAINTENANCE ACTIVITIES 2-8

2.3.1 Surveillance and Maintenance of Barriers and Postings 2-8
2.3.2 Container Management 2-8
2.3.3 Equipment Calibration, Testing, Maintenance, and Repair 2-9

2.3.4 Repair and Upgrades of Confinement Systems 2-9
2.3.5 Repair and Upgrades of Structural Components 2-9
2.3.6 Inspection for and Response to Spills 2-9
2.3.7 Removal/Disposal of Hazardous Substances 2-9
2.3.8 Nondestructive Assay, Waste Characterization, and Sampling 2-10
2.3.9 Removal of Nonprocess Equipment 2-10
2.3.10 Radiological Surveys 2-10
2.3.11 General Inspections and Tours 2-10

2.4 SEGMENTATION 2-10

2.5 DEMOGRAPHICS 2-10

2.5.1 Site Location 2-11
2.5.2 Population Distribution 2-11

2.6 SITE FEATURES 2-11

2.6.1 Topography 2-11
2.6.2 Meteorology 2-11
2.6.3 Flooding 2-11
2.6.4 Wind and Tornados 2-12
2.6.5 Thunderstorms and Lightning 2-13
2.6.6 Range Fire 2-13
2.6.7 Earthquake 2-13
2.6.8 Ash and Snow 2-14
2.6.9 External Explosion 2-14
2.6.10 Uncontrolled Releases (Accidents) from Nearby Facilities 2-15
2.6.11 Plane Crash 2-15
2.6.12 Transportation Accident and Vehicle Crash 2-15

3.0 OPERATIONS 3-1

3.1 PROJECT ACTIVITIES 3-1

3.2 CONFINEMENT 3-1

3.3 SAFETY-SIGNIFICANT SYSTEMS 3-1

3.4 ACTIVE SYSTEMS 3-1

4.0 HAZARD ANALYSIS 4-1

5.0 CONTROL AND COMMITMENTS 5-1

5.1 SPECIAL CONTROLS 5-1

5.2 PROJECT-SPECIFIC CONTROLS 5-1

5.3 PROGRAMMATIC CONTROLS 5-1

5.3.1 Conduct of Operations 5-1
5.3.2 Work Controls 5-1
5.3.3 Radiological Protection Program Controls 5-2
5.3.4 Worker Health and Safety Controls 5-2
5.3.5 Training Requirements 5-2
5.3.6 Maintenance Requirements 5-3
5.3.7 Configuration Control 5-3
5.3.8 Quality Assurance 5-3
5.3.9 Emergency Preparedness 5-3

6.0 REFERENCES 6-1

APPENDICES

A 241-CX TANK SYSTEM PRELIMINARY HAZARD ANALYSIS ..... A-i
B 241-CX TANK SYSTEM FINAL HAZARD CLASSIFICATION ..... B-i
C 251-C GAS PREPARATION BUILDING AND 276-C SOLVENT HANDLING FACILITY FINAL HAZARD ANALYSIS ..... C-i

FIGURES

2-1. Schematic Diagram of 241-CX-70 Storage Tank. 2-17
2-2. Schematic Diagram of 241-CX-71 Storage Tank. 2-18
2-3. Schematic Diagram of 241-CX-72 Storage Tank. 2-19
2-4. 200 Area Hot Semi Works 2-20

ACRONYMS

ALARA	as low as reasonably achievable
amsl	above mean sea level
ASA	auditable safety analysis
BHI	Bechtel Hanford, Inc.
BP	before present
CFR	*Code of Federal Regulations*
CONOPS	conduct of operations
D&D	decontamination and decommissioning
DOE	U.S. Department of Energy
Ecology	Washington State Department of Ecology
EDPI	Engineering Department Project Instruction
EMP	emergency management plan
ERC	Environmental Restoration Contractor
ERO	emergency response organization
FHC	final hazard classification
HMS	Hanford Meteorological Station
HVAC	heating, ventilation, and air conditioning
MMI	Modified Mercalli intensity
NDA	nondestructive assay
PHA	preliminary hazard analysis
PMF	probable maximum flood
PUREX	plutonium uranium recovery through extraction
REDOX	Reduction-Oxidation (Plant)
RL	U.S. Department of Energy, Richland Operations Office
RMA	radioactive material area
S&M	surveillance and maintenance
TQ	threshold quantities
Tri-Party Agreement	*Hanford Federal Facility Agreement and Consent Order*
TRU	transuranic
TSD	treatment, storage, and disposal

METRIC CONVERSION CHART

Into Metric Units

If You Know	*Multiply By*	*To Get*
Length		
inches	25.4	millimeters
inches	2.54	centimeters
feet	0.305	meters
yards	0.914	meters
miles	1.609	kilometers
Area		
sq. inches	6.452	sq. centimeters
sq. feet	0.093	sq. meters
sq. yards	0.0836	sq. meters
sq. miles	2.6	sq. kilometers
acres	0.405	hectares
Mass (weight)		
ounces	28.35	grams
pounds	0.454	kilograms
ton	0.907	metric ton
Volume		
teaspoons	5	milliliters
tablespoons	15	milliliters
fluid ounces	30	milliliters
cups	0.24	liters
pints	0.47	liters
quarts	0.95	liters
gallons	3.8	liters
cubic feet	0.028	cubic meters
cubic yards	0.765	cubic meters
Temperature		
Fahrenheit	subtract 32, then multiply by 5/9	Celsius

Out of Metric Units

If You Know	*Multiply By*	*To Get*
Length		
millimeters	0.039	inches
centimeters	0.394	inches
meters	3.281	feet
meters	1.094	yards
kilometers	0.621	miles
Area		
sq. centimeters	0.155	sq. inches
sq. meters	10.76	sq. feet
sq. meters	1.196	sq. yards
sq. kilometers	0.4	sq. miles
hectares	2.47	acres
Mass (weight)		
grams	0.035	ounces
kilograms	2.205	pounds
metric ton	1.102	ton
Volume		
milliliters	0.033	fluid ounces
liters	2.1	pints
liters	1.057	quarts
liters	0.264	gallons
cubic meters	35.315	cubic feet
cubic meters	1.308	cubic yards
Temperature		
Celsius	multiply by 9/5, then add 32	Fahrenheit

1.0 INTRODUCTION

1.1 PURPOSE

The 241-CX tank system is an interim status permitted treatment, storage, and disposal (TSD) unit pursuant to the Hanford Facility Dangerous Waste Part A Permit. In accordance with the current *Hanford Federal Facility Agreement and Consent Order* (Tri-Party Agreement) (Ecology et al. 1998) and schedule, Tri-Party Agreement Milestone M-20-54 requires the submittal of a TSD closure plan for the 241-CX tanks in 2004. A data quality objective process will be used to determine if additional characterization of the tanks or surrounding soils is necessary to support the preparation of alternatives for the closure plan. The 241-CX tank system will remain under surveillance and maintenance (S&M) until final TSD closure is attained. As a result of the research performed and documented in this auditable safety analysis (ASA), there were no indications found that would change the existing priority for closure of the TSD unit.

This ASA examines the associated hazards, identifies appropriate controls, documents the final hazard classification (FHC), and documents resulting commitments (if any) for S&M of the inactive 241-CX tank system, 215-C Gas Preparation Building, and 276-C Solvent Handling Facility. The current revision (Rev. 1) of this document incorporates the above-grade structures, 215-C Gas Preparation Building, and 276-C Solvent Handling Facility into the original document that addressed the 241-CX tank system. Both facilities, 215-C Gas Preparation Building and 276-C Solvent Handling Facility, are deactivated facilities that were decontaminated in the 1985 time period.

This document discusses the following topics:

- A description of the S&M activities to be performed
- An assessment of the total inventory of radioactive and other hazardous materials within the 241-CX tank system, 215-C Gas Preparation Building, and 276-C Solvent Handling Facility
- Identification of the hazards associated with the S&M of the 241-CX tank system, 215-C Gas Preparation Building, and 276-C Solvent Handling Facility
- The hazard classification based on comparison of the material at risk to the threshold quantities (TQ) of U.S. Department of Energy (DOE) standard, DOE-STD-1027-92 (DOE 1992)
- An evaluation of the hazards to identify mitigative and preventive features and also commitments and controls (if appropriate).

1.2 DOCUMENT ORGANIZATION

Section 1.3 briefly describes the S&M activities authorized by approval of this document. Section 1.4 describes the configuration control processes that are used. Section 1.5 summarizes the conclusions of the hazards analysis. Section 1.6 describes the method used for the FHC.

This document also consists of five additional sections. Section 2.0 provides the background information necessary to understand the hazards that have potential risk. Section 3.0 provides the basis of operations that is analyzed and authorized under the ASA. Section 4.0 identifies the hazards present, evaluates the hazards, and provides the FHC. Section 5.0 describes project-specific, special, and programmatic controls, and Section 6.0 contains a list of references used in this document. The preliminary hazard analysis for the 241-CX tank system is provided in Appendix A and the FHC is provided in Appendix B. Appendix C provides the final hazard analysis for the 251-C Gas Preparation Building and 276-C Solvent Handling Facility.

1.3 AUTHORIZED ACTIVITIES

The S&M activities being authorized for the 241-CX tank system, 215-C Gas Preparation Building, and 276-C Solvent Handling Facility typically include surveillance of barriers and postings, housekeeping activities, removal of contaminants, and general surveys and tours. Section 2.3 describes the activities being authorized.

1.4 CONFIGURATION CONTROL

Proposed changes or discovered conditions for the 241-CX tank system, 215-C Gas Preparation Building, and 276-C Solvent Handling Facility will be evaluated in accordance with established change control processes. Refer to Section 5.0 for additional information concerning configuration control.

1.5 SAFETY SUMMARY

Following a detailed analysis of the potential hazards that could be encountered during S&M activities at the 241-CX tank system, 215-C Gas Preparation Building, and 276-C Solvent Handling Facility, it was determined that no activity/process authorized by this ASA could credibly result in unacceptable consequences to workers, the public, or the environment.

The hazards analysis also concluded that existing institutional controls were adequate to control the existing hazards and the hazards that could be encountered during S&M activities. There are no facility-specific controls required for the 241-CX tank system, 215-C Gas Preparation Building, or 276-C Solvent Handling Facility.

1.6 HAZARD CLASSIFICATION

The FHC for the 241-CX tank system was determined to be "radiological". The FHC was determined by comparing the material at risk to DOE (1992) Category 3 TQs in accordance with Engineering Guide No. 0000X-EG-N0004 (BHI 1998) and direction from the DOE Assistant Manager for Environmental Restoration. Details of the radiological FHC are found in Appendix B.

The 215-C and 276-C Facilities were also determined to be "radiological". The FHC was determined by comparing the material at risk to DOE (1992) Category 3 TQs in accordance with BHI-DE-01, *Design Engineering Procedures Manual*, Engineering Department Project Instruction (EDPI) 4.28-01 "Hazard Classification." Details of the FHC are found in Appendix C.

2.0 BACKGROUND

2.1 FACILITY HISTORY

2.1.1 Mission of 241-CX-Tank System

The 241-CX tank system is comprised of three below-grade tanks (241-CX-70, 241-CX-71, and 241-CX-72) and the vault associated with the 241-CX-72 tank. The tanks and vault were originally associated with the operations of the Hot Semiworks/Strontium Semiworks Facility. The 241-CX-70 tank was used to handle process waste. The 241-CX-71 tank was used to neutralize hot shop sink and process/condensate cooling coil wastes prior to discharge to the 216-C-1 Crib. The 241-CX-72 tank and associated vault were used for experimental waste concentration studies and experiments in tank bumping.

2.1.2 Mission of Hot Semiworks/Strontium Semiworks

The Hot Semiworks Facility was built in 1949 as a pilot plant to develop optimum conditions for the economic operations of the Reduction-Oxidation (REDOX) Plant and U Plant. In 1954, the facility was converted for use as a pilot plant for plutonium-uranium recovery through extraction (PUREX) design data and specifications (WHC 1992). The Hot Semiworks Facility was also used for immediate troubleshooting for urgent plant separations problems (WHC 1989d). The facility was used in this capacity until it was shut down in 1956 (RHO 1984).

In 1961, the facility was again modified and was used for recovery and purification of megacurie quantities of strontium. At this time, the facility was renamed the "Strontium Semiworks". Purified strontium-90 (as much as 400,000 curies) was loaded into a cask and shipped offsite (WHC 1992). The last processing operation performed was the purification of one batch of cerium, technicium, promethium, and minor amounts of americium and curium (DOE 1985). In 1967, the facility was shut down and retired (RHO 1984).

The wastes discharged to the 241-CX-70 and 241-CX-71 tanks came only from REDOX process flow sheet improvement studies. The waste discharged to the 241-CX-72 tank for terminal storage came exclusively from pilot studies of PUREX process development. None of the three tanks received waste from the strontium-recovery campaign that was conducted in the facility (WHC 1989b).

The 215-C Gas Preparation Building was constructed as a support facility for the 201-C Process Building. While the exact date of construction for the facility is not known, it was in full operation in 1951 (GE 1951). It provided compressed air for pneumatic equipment and instrument air and provided an inert gas system for use in the 201-C Hot Process Building when flammable solvents were used (Kiser and Witt 1994, DOE-RL 1993a). The facility discharged acid wastes to various cribs (e.g., 216-C-3 Crib from 1953 to 1954) and ponds (e.g, 216-C-9 Pond) at various times (DOE-RL 1993a). The equipment and structures were considered radioactively contaminated prior to decontamination in 1985.

The 276-C Solvent Handling Facility contained equipment and tanks for the treatment and storage of process solvents used in the 201-C Process Building operations. Detailed information exists on the facility configuration as part of the Hot Semiworks, but its configuration during strontium operations is not known. The facility discharged primarily radiologically contaminated neutral-to-basic wastes to, the 216-C-4 Crib between 1955 and 1965 (DOE-RL 1993a).

2.1.3 Decontamination and Decommissioning of Strontium Semiworks Complex

Because the Strontium Semiworks Complex was surplus to DOE needs, decommissioning was initiated in 1983 with the preparation of an engineering study on the feasibility of alternatives for decommissioning. From 1983 to 1985, the decommissioning documentation (consisting of a project plan, an environmental assessment, and a safety analysis report) was prepared (WHC 1990).

Of the seven decontamination and decommissioning (D&D) alternatives considered, the selected alternative consisted of partially dismantling the process building (to less than or equal to 10 ft above grade), filling the cells and galleries with cement, and constructing an earthen barrier (approximately 15 ft thick) over the remains (RHO 1984). The *Safety Analysis Report for D&D of the Strontium Semiworks Complex* (RHO 1984) and the environmental assessment (DOE 1985) provide additional descriptive information on the former Strontium Semiworks Complex and the D&D activities that were conducted. In 1985, the environmental assessment concluded that the proposed D&D alternative did not require an environmental impact statement, and the initiation of the actual D&D field activities began.

The 215-C Gas Preparation Building had been used to store miscellaneous equipment and was decommissioned and decontaminated in 1985 (DOE-RL 1993a). The building is still considered to be a radiation control area. A 1997 report indicated that survey results inside the building found no areas in excess of background radiation and that three readings were approximately 130 times background in the attached side building (Egge 1997).

The 276-C Solvent Handling Facility was partially decommissioned in 1984 by removing all radioactively contaminated equipment within the building and decontaminating all exposed surfaces. The building was subsequently used for storing equipment that was unrelated to any Strontium Semiworks activities. The building is currently inactive (DOE-RL 1993a). A 1982 report indicated that the first floor was in use for rigging lofts, but the remaining floors were unused (RHO 1982).

The surface areas surrounding both the 215-C and 276-C Buildings were remediated in 1999 to provide interim stabilization to approximately 5,006 m^2 within the Strontium Semiworks. The objectives of the effort included reducing risk to workers by reducing exposure levels. The 215-C and 276-C Buildings were not stabilized or treated at that time and currently remain radiation control areas (Sherman 2000).

2.1.4 History and Decommissioning of Tank 241-CX-70

The 241-CX-70 tank was built in 1952 to store high-level process waste. The liquid inventory was pumped out of the tank in 1979, leaving approximately 10,300 gal of sludge in the tank (WHC 1988). At the time decommissioning began in 1985, the remaining tank inventory consisted of sludge and liquid heel. The decommissioning activities included plans to sluice the remaining tank sludge to the double-shell tank farms and then fill the tank with concrete (RHO 1984).

The 241-CX-70 tank's waste removal activities were initiated in 1987 with a sluicing and pumping system used to loosen and dissolve the sludge and then pump the sludge to the tank farms. WHC 1988 provides a thorough discussion of the 1987 waste removal activities that resulted in the removal of most of the waste from the tank. At the end of the 1987 sluicing and pumping campaign, the residual waste qualified as both transuranic (TRU) and dangerous waste due to corrosive pH (WHC 1988). A residual inventory of approximately 750 gal was estimated to remain, comprised of approximately one-third solids (with estimated TRU content of 300 nCi/g) and two-third liquids. Further waste removal activities (which ultimately resulted in vacuum removal of the sludge) were initiated in 1991, and the tank was confirmed empty in 1992.

2.1.5 History and Decommissioning of Tank 241-CX-71

The 241-CX-71 tank was used to neutralize hot shop sink and condensate cooling coil wastes prior to discharge to the 216-C-1 Crib. At the time that decommissioning began, the plans included (1) removing pumpable liquid inventory from 241-CX-71, (2) performing core sampling to determine if the sludge heel generated enough heat to require removal, (3) removing the sludge (if necessary), and (4) filling of the tank's void space with concrete (RHO 1984).

Research for the ASA did not locate any documentation of the heat-generation criteria or that such a determination had been made. Bechtel Hanford, Inc. (BHI) assumes that the 241-CX-71 tank core sample was taken and that the sludge heel did not generate enough heat to require removal, as this was an apparent condition to be met before grouting the tank.

In 1986, the 241-CX-71 tank was topped off with concrete and was considered to be decommissioned (WHC 1990). As a result of waste management activities occurring after November 19, 1980, and because the tank may have received decontamination flushes during operation, it was determined that the tank's contents should be sampled to determine if hazardous constituents were present (WHC 1990). The sampling was to be performed in accordance with an engineering study of alternative sampling methods (WHC 1989a).

Core drillings of the tank were completed in October 1990. Although five core samples were taken, the detailed results of the analyses were inadequate for designation of waste (WHC 1991).

2.1.6 History and Decommissioning of Tank 241-CX-72

The 241-CX-72 tank was used to perform experimental waste concentration and tank bumping studies. "Tank bumping" refers to the phenomena where localized heating of tank contents combined with poor circulation results in a rapid release of gases and/or steam. Tank bumping may result in the spread of contaminants into the tank's off-gas system. The 241-CX-72 tank was used for a period of approximately one year to study the concentration of PUREX wastes. As reported in WHC (1989b), records indicated that the 241-CX-72 tank was used exclusively for terminal storage of waste from pilot studies of the PUREX process. Fluids (some containing fluorine compounds) from decontamination following the PUREX study may also have been placed in this tank (WHC 1989b).

Studies of waste self-concentration and investigations of tank bumping phenomenon (for wastes with internally generated or externally applied energy sources) were conducted on the tank. The 241-CX-72 tank received liquid waste from heel recovery studies, as well as from zirconium cladding dissolution investigations processes that most likely used fluorides and/or fluorinated solvents. A plan was also discussed to discharge solutions containing fluoride ions that were used for decontamination (WHC 1989b). Even though a manual agitator assembly with paddles exists in the tank, stratification of the 241-CX-72 tank wastes is likely to have occurred.

At the time that decommissioning began, the plans included filling the tank's void space with concrete (RHO 1984). Heat generation and other residual waste concerns were not addressed because it was believed that the tank was empty (probably as a result of taking measurements inside a tank periphery drywell). The 241-CX-72 tank was initially decommissioned in 1986 in accordance with the original project plan (WHC 1990) that filled the tank's void space with grout (the annulus between the tank and caisson remains empty). However, in 1988, when an agitator rod was inadvertently pulled from the tank and found to have approximately 2,000 to 8,000 disintegrations per minute alpha contamination, it was suspected that the tank still contained contaminants, and a radiological investigation/evaluation was performed.

2.1.7 1988 Radiological Investigation/Evaluation of Tank 241-CX-72

The 1989 radiological evaluation and waste characterization documented in WHC-SD-CP-TI-148 [WHC 1989b] was performed to estimate the amount and chemical form of plutonium contained in the sludge layer. The 1989 investigation of the 241-CX-72 tank found available historical records to be either incomplete or inadequate to ascertain the nature and quantity of the tank's contents (WHC 1989b). Results of radiological investigations by nondestructive assay (NDA) methods and interviews with individuals associated with the facility during its operational period were used to augment the available data.

Gamma spectroscopic, relative axial neutron flux profile, neutron flux, axial temperature profile, and axial dose rate profile measurements were taken. The evaluation (WHC 1989b) concluded the following:

- An approximate 11-ft sediment layer comprised of fission products and transuranium isotopes exists at the bottom of the 241-CX-72 tank.

- The relative neutron flux and radiation dose profiles suggest a uniform distribution of activity in the sludge layer, with likely higher concentration in the bottom 2 to 3 ft of the tank.
- The activity layer is dry and does not contain any hydrogenous materials to thermalize the neutrons generated within the contents of the tank.
- Axial temperature profile measurements of 60°F to 72°F indicated the presence of heat-generating wastes.
- Dose rates vary from approximately 4 rem/hr at 10 ft above the sludge layer to 265 R/hr at the top of the sludge layer, increasing to approximately 491 R/hr at the bottom of the sludge layer.
- The TRU content is likely present as fluorides.
- The plutonium content of the sludge is between 150 and 200 g.

The estimates of the 241-CX-72 tank's inventory were based on NDA measurements taken inside a periphery drywell (not direct waste samples) and considered uncertainties when estimating TRU content. Without direct analysis of tank wastes, BHI can neither confirm nor refute the prior radiological evaluation, characterization, and estimates.

2.1.8 241-CX-72 Tank Grout Removal

Subsequent to the radiological investigation, an engineering study was completed (WHC 1989c). The engineering study outlined a three-phase approach for sampling the tank: (1) removing the grout, (2) sampling and analyzing the waste, and (3) retrieving the waste material to remediate the tank.

A greenhouse and caisson were constructed over the tank in 1990 to support drilling operations to remove the grout. Because the tank contained an agitator assembly, mockup testing of grout removal activities was conducted from January to September 1992. The mockup testing was ultimately terminated due to problems encountered when drilling through a mockup of grout and embedded steel (WHC 1993).

2.1.9 Disposition of 241-CX Tank System

The Semiworks Source Aggregate Area Management Study Report (DOE-RL 1993a) recommended that decommissioning activities be suspended and that the ultimate disposition of the 241-CX tank system be integrated with the remedial investigation/feasibility study for the 200-SO-1 Operable Unit. This approach would also allow for the preparation of one closure plan for all tanks versus individual closure plans for each tank. In addition, DOE-RL (1993b) provided additional information regarding the 241-CX-72 tank and deferment of further sampling and decommissioning work until the 200-SO-1 Operable Unit work is initiated. The

DOE's recommendation was accepted by Washington State Department of Ecology (Ecology) in 1994 (Ecology 1994).

2.1.10 Permits

The 241-CX tank system is an interim status permitted TSD unit pursuant to the Hanford Facility Dangerous Waste Part A Permit Application Form 3. The permit is contingent on the following measures specified by Ecology (Ecology 1994):

- Maintain the greenhouse over the 241-CX-72 tank in good condition.
- Prohibit the use of the greenhouse for any purposes other than storage of equipment associated with former drilling operations.
- Preserve access to the drywell above the 241-CX-72 tank.
- Conduct periodic inspections to verify compliance with the above conditions.

2.2 FACILITY DESCRIPTION

The 241-CX tank system consists of three inactive underground storage tanks (241-CX-70, 241-CX-71, and 241-CX-72), an inactive underground vault (241-CX-72 vault) formerly used to support 241-CX-72 operations, and a greenhouse that was built over the 241-CX-72 tank and a portion of the vault. The 241-CX tank system will remain under S&M until ultimate disposition and remediation.

2.2.1 241-CX-70 Tank

The 241-CX-70 tank is a 30,000-gal capacity, underground waste-handling tank. The tank consists of an underground concrete shell, with a 0.25-in. stainless-steel liner. The tank's interior dimensions are 20 ft in diameter by 15 ft high. The tank's sides and top are constructed of 1-ft-thick concrete, with the tank bottom thickness varying from 2 ft at the edges to 9 in. at the center. Figure 2-1 provides a sketch of the tank.

The top of the tank is approximately 11 ft below grade (WHC 1988). Two fill pipes entering the side of the tank near the top have been isolated and capped. Nine risers extend out of the tank to above grade and have been capped. The tank was confirmed empty and clean in 1992. Dose readings from the interior of the tank (taken in 1992) range from 5 mrad/hr beta at the top to 15,000 mrad/hr beta on the bottom. Two wood covers shield a former access pit and one of the risers.

2.2.2 241-CX-71 Tank

The 241-CX-71 tank is a stainless-steel, underground neutralization tank of approximately 3,800-gal capacity. It is reported to be 9 ft in diameter and 9 ft high. The top of the tank is

located approximately 3.5 ft below grade. Crushed limestone was periodically added to neutralize hot shop sink wastes and condensate cooling coil effluent. The tank design provided for a period of waste holdup and neutralization prior to overflow to the 216-C-1 Crib. The residual limestone and waste sludge was capped with grout in 1986. Two risers extending above grade have also been grouted and capped. Figure 2-2 provides a sketch of the tank. Drawings of the tank do not exist.

2.2.3 Tank 241-CX-72, Vault, and Greenhouse

The 241-CX-72 tank is an approximately 2,000-gal capacity, underground experimental waste concentrating tank, located approximately 14 ft below grade. Figure 2-3 provides a sketch of the tank and associated vault. The tank is constructed of 0.38-in.-thick stainless-steel and is reinforced with five stiffener rings connected by three rows of vertical guides. A cylindrical electric heater is mounted above each stiffener ring. The stiffener rings extend nearly to the wall of a carbon-steel caisson.

The top of the vessel is sealed with a plate that extends over and seals the caisson. Five pipes extend from the tank to the above-grade level and two pipelines enter the tank underground. A manually operated agitator with five individual paddles extends above the tank. The bottom of the caisson is sealed with a 12-in.-thick reinforced grout plug that provides a base pad for the 241-CX-72 tank. The tank was grouted in 1986. The annulus between the tank and caisson remains empty. The caisson to access the risers and the top of the tank is covered with a protective lid located at floor-level in the greenhouse. The caisson is not normally accessed. From historical survey maps, the dose rates vary from 8 to 45 mr/hr at the top of the tank.

An underground vault is located 9 ft to the north of the centerline of the 241-CX-72 tank. The vault was used to support former waste concentration experiments and consisted of a mechanical pit, an instrument pit, and a sampling pit. Drawings H-2-71672 and SK-2-56955 indicate that the waste streams entering the 241-CX tank bypassed the vault. The vault was filled with grout in 1986 as part of decommissioning activities.

To support the 241-CX-72 tank grout removal and waste sampling activities, the soil covering the upper portion of the tank and risers was excavated in 1990, and a steel caisson was constructed from grade level down to the top of the tank. A large greenhouse was constructed over the top of the 241-CX-72 tank to support the grout removal and sampling activities. Part of the greenhouse was constructed over the 241-CX-72 vault.

2.2.4 215-C Gas Preparation Building

The 215-C Gas Preparation Building consists of a concrete equipment room and a vault. There is also a cylinder storage deck lean-to on the south side of the building (Kiser and Witt 1993). It is located about 90 ft west of the 201-C Hot Process Building (GE 1951).

The building has two rooms on a single level and is approximately 35 ft in length, 21 ft in width, and 13 ft high. These rooms provided storage for equipment, compressors, and gas cylinders. A lean-to on the south side of the building protected the three compressed air storage tanks.

2.2.5 276-C Solvent Handling Factility

The 276-C Solvent Handling Facility is a four-story structure, extending approximately 46 ft above grade, with a total floor area of 2300 ft^2. It has a steel frame with metal siding, concrete floors, and a concrete roof. All of the exposed steel framework is covered with 1 in. of heat-resistant plaster (DOE-RL 1993a, GE 1951). The siding and partitions were built to meet 2-hour fire-resistant rating standards at that time.

Equipment for solvent treatment was located on the first level, with the chemical addition tanks on the second level mezzanine, and the head tanks and storage tanks for clean solvents on the third and fourth floors. Removable panels were located on the top two floors to allow large equipment to be removed. The heating, ventilation, and air conditioning (HVAC) system was located on the second level, and a power control room was attached to the south side of the building.

The facility was intended for use with low-level radioactive (termed radioactively "cold") corrosive liquids based on the types of tanks (i.e., Class II tanks) originally installed in the facility (GE 1951).

Contamination was limited to a diluent vessel on the third floor and in the filter housing (DOE-RL 1993a). All liquid wastes generated as part of the Hot Semiworks operations went to the chemical waste leach pit (GE 1951).

2.3 SURVEILLANCE AND MAINTENANCE ACTIVITIES

The S&M phase consists primarily of surveillance to ensure that contamination sources are stable and that general housekeeping is maintained. Should conditions change, response will be taken that is appropriate for the changed condition. These measures are described in the following subsections.

2.3.1 Surveillance and Maintenance of Barriers and Postings

Barriers and postings are used to prevent unwarranted access to hazardous areas and to inform personnel of conditions that exist at the 241-CX tank system, 215-C Gas Preparation Building, and 276-C Solvent Handling Facility. Examples include locks and tags, door locks, fencing, confined space postings, and radiological area postings. Inspection of barriers and postings is conducted as part of the facility's routine surveillance, as specified in BHI-FS-02, *Field Support Work Instructions*. Any off-normal conditions regarding barriers or postings are to be noted on associated data/inspection sheets.

2.3.2 Container Management

Routine surveillance activities include inspecting existing containers used to store former drilling support equipment and identifying unlabeled containers in the 241-CX tank system greenhouse and general area, 215-C Gas Preparation Building, and 276-C Solvent Handling Facility.

Contents of any unlabeled containers are identified and labeled, and the containers are removed and transported to a permitted storage facility for TSD. Periodic container inspections are performed to guard against container deterioration or signs of leakage. If a deteriorating or leaking container is found, the container is repackaged and moved to an appropriate disposal facility.

2.3.3 Equipment Calibration, Testing, Maintenance, and Repair

Although there is currently no installed equipment to perform calibration or testing, routine maintenance, repair, or disconnections may be conducted on the electrical supply to the greenhouse. In addition, routine work activities may include the skills of craft workers, such as relamping. Elements and schedules for these activities are included in procedures and task instructions. If equipment requiring calibration, testing, maintenance, or repair is installed under appropriate change control/authorization processes, these activities would be authorized for the new equipment.

2.3.4 Repair and Upgrades of Confinement Systems

Repair of confinement systems (e.g., repair of damaged risers) may be performed to ensure that continued confinement is maintained. Upgrades or physical changes to these systems may be undertaken if the changes provide equivalent or improved confinement. Should such changes occur, they will be evaluated to determine if the changes impact the FHC of the 241-CX tank system, 215-C Gas Preparation Building, and 276-C Solvent Handling Facility.

2.3.5 Repair and Upgrades of Structural Components

Structural components necessary to maintain confinement will be repaired or upgraded to maintain control of hazardous substances. Corrective action will be taken, as identified in safety documents for each specific activity. Repair or upgrade of the 241-CX-72 greenhouse will be conducted in accordance with appropriate safety requirements.

2.3.6 Inspection for and Response to Spills

The 241-CX tank system, 215-C Gas Preparation Building, and 276-C Solvent Handling Facility are routinely surveyed for indications of spills of hazardous substances. If a spill is discovered, the affected area will be isolated to prevent personnel exposure, corrective measures will be determined, and the spilled material will be packaged and removed to an appropriate disposal facility.

2.3.7 Removal/Disposal of Hazardous Substances

If required, hazardous substances within the 241-CX tank system area or greenhouse, 215-C Gas Preparation Building, or 276-C Solvent Handling Facility (e.g., potentially contaminated tumbleweeds, debris, or dead animals) will be properly packaged and moved to an appropriate disposal facility. Any hazardous substance removed from the 241-CX tank system, 215-C Gas Preparation Building, and 276-C Solvent Handling Facility may, after proper waste designation,

be disposed at the Environmental Restoration Disposal Facility or another disposal facility, as appropriate.

2.3.8 Nondestructive Assay, Waste Characterization, and Sampling

Nondestructive assay, waste characterization, and sampling (e.g., turmbleweeds and debris) may be performed in the 241-CX tank system area and greenhouse, 215-C Gas Preparation Building, or 276-C Solvent Handling Facility. The activities will be performed in accordance with established programs and procedures. No major characterization of the tank system is planned until final disposition is initiated.

2.3.9 Removal of Nonprocess Equipment

Removal of nonprocess equipment may be performed in the 241-CX tank system, 215-C Gas Preparation Building, or 276-C Solvent Handling Facility in support of reducing the risks from known hazards (e.g., removing unused but energized electrical equipment). These activities will be performed in accordance with established programs and procedures.

2.3.10 Radiological Surveys

Radiological surveys will be performed in support of S&M activities. These surveys will be performed in accordance with established programs and procedures.

2.3.11 General Inspections and Tours

General inspections and tours may be performed separate from routine S&M activities. Inspections and tours will be conducted in accordance with appropriate programs and procedures.

2.4 SEGMENTATION

The 241-CX tank system is segmented to determine the FHC. Each tank is a separate segment. The three tanks are spatially separated and are not interconnected mechanically (i.e., by piping or ventilation) or electrically.

2.5 DEMOGRAPHICS

This section describes the demographics that are graded consistent with the hazard potential of the facility. The hazards analyses (Appendices A and C) conclude that the release potential is limited to a localized area.

2.5.1 Site Location

The 241-CX tank system is located on the Hanford Site, which is a 560-mi^2 plot of land situated in the southeast portion of the state of Washington. The Hanford Site is located within Grant, Benton, and Franklin Counties. The 241-CX tank system is located in the 200 East Area, well above established flood plains. Figure 2-4 shows the location of the 241-CX tank system, 215-C Gas Preparation Building, 276-C Solvent Recovery Facility, and nearby facilities.

2.5.2 Population Distribution

The nearest occupied facility to the 241-CX tank system, 215-C Gas Preparation Building, and 276-C Solvent Handling Facility is the 209-E Building (the former Critical Mass Laboratory), which is currently used for tank farm waste support as general office space. This building is located approximately 365 ft west of the 241-CX tank system.

Periodic S&M activities are also conducted in the general area of the 241-CX tank system, 241-CX-72 greenhouse, 215-C Gas Preparation Building, and 276-C Solvent Handling Facility.

2.6 SITE FEATURES

2.6.1 Topography

The topography of the Hanford Site is relatively flat except for several mountain ridges on the 200 Area Central Plateau. Elevations for the site range from 400 ft above mean sea level (amsl) along the Columbia River to greater than 3,300 ft amsl at Rattlesnake Mountain. The 200 Area Central Plateau (which is located on a broad, flat topographic high in the center of the Site) ranges in elevation from 620 to 800 ft amsl.

2.6.2 Meteorology

The climate of the Hanford Site is a mid-latitude semi-arid or mid-latitude desert. The summers are warm and dry with abundant sunshine, and the winters are cool with occasional precipitation.

The mean surface air temperature at the Hanford Meteorological Station (HMS) has averaged about 53.3°F from 1945 to 1994. Temperatures average 76°F in July and 30°F in January (PNNL 1995). Mean average precipitation at the HMS is 6.3 in., with the majority of precipitation falling in the winter months. Prevailing near-surface winds around the HMS are primarily from the northwest, with an average wind speed of 7.6 mi/hr (PNNL 1996).

2.6.3 Flooding

Large Columbia River floods have occurred in the past, but the likelihood of recurrence of large-scale flooding has been reduced by the construction of several flood-control and water-storage dams upstream of the Hanford Site. Evaluation of flood potential is conducted in part through the concept of the probable maximum flood (PMF). Flooding associated with

events such as surges, seiches, and tsunami effects are not credible and are not considered in this analysis.

The PMF for the Columbia River below Priest Rapids Dam is greater than the 500-year flood. The PMF is not expected to inundate the buildings in the 200 and 300 Areas but would flood part of the 100-N Area. The PMF may also flood access roads and temporarily cut off electrical power to the 100 and 300 Areas. The 241-CX tank system is located in the 200 Area; therefore, further consideration of PMF impacts is not warranted.

A flood risk analysis of Cold Creek along the western margin of the Hanford Site was previously conducted. The analysis concluded that the maximum level that would be reached is the 645-ft elevation of certain areas within the western portion of the 200 West Area and the 200 East Area would not be impacted. The 241-CX tank system is located in the 200 East Area; accordingly, evaluation of the effects of the postulated Cold Creek flood is not warranted.

Potential dam failures on the Columbia River have been evaluated for the Hanford Site. A postulated 50% instantaneous breach of the Grand Coulee Dam as a result of sabotage has previously been evaluated. This postulated event is not analyzed further in this document because it is considered a "beyond design basis event" that is adequately evaluated and addressed under the existing emergency preparedness program.

2.6.4 Wind and Tornados

The Hanford Site is subject to frequent strong westerly winds. The all-time peak wind recorded at the HMS tower was a gust of 80 mi/hr in 1972. The current design criteria for wind loading is 85 mph for a basic wind speed, which is expected to occur once every 100 years (PNNL 1996).

The effects of high wind acting on the 241-CX tank system, 215-C Gas Preparation Building, and 276-C Solvent Handling Facility are addressed in the hazards identification (Appendices A and C), which concluded that high wind would have no effect on the underground storage tanks or vault. The effects of high wind acting on the 241-CX-72 greenhouse, 215-C Gas Preparation Building, and 276-C Solvent Handling Facility were evaluated in the preliminary hazard analyses (PHAs). Because the ability of the greenhouse to withstand the current design criteria is not known, the PHA assumed that greenhouse collapse could possibly spread minor amounts of contaminants.

The ability of the 215-C Gas Preparation Building and 276-C Solvent Handling Facility to withstand high winds is also unknown due to potential structural integrity deterioration. These buildings were also assumed to collapse and possibly spread minor amounts of contaminants. The Hanford Site is located well outside established tornado alleys. The probability of a tornado striking anywhere on the Hanford Site is 9.6×10^{-6}/yr (PNNL 1996). No Hanford Site design criteria exist for tornados. Accordingly, evaluation of the effects of a tornado acting upon the 241-CX tank system, 215-C Gas Preparation Building, and 276-C Solvent Handling Facility is not warranted.

2.6.5 Thunderstorms and Lightning

Thunderstorms occur with relative frequency on the Hanford Site, although severe thunderstorms are rare. The Hanford Site is vulnerable to lightning strikes, and lightning protection may be provided for site facilities. A lightning strike leading to a loss of production capability is no longer pertinent because the 241-CX tank system, 215-C Gas Preparation Building, and 276-C Solvent Handling Facility are no longer operating. The probability of a lightning strike leading to enough structural damage to the greenhouse to result in a release of contaminants is of sufficiently low probability, and further evaluation is not warranted.

2.6.6 Range Fire

The probability of a lightning strike or other source leading to a range fire is a credible event because the Hanford Site is vulnerable to both lightning strikes and extremely dry conditions. Major range fires have occurred nine times in the last 35 years. The Hanford Fire Department provides response capability and is assisted by local and state response support as needed. The areas surrounding the 241-CX tank system, 215-C Gas Preparation Building, and 276-C Solvent Handling Facility are basically devoid of vegetation, and tumbleweed accumulations are periodically removed. The probability of a range fire leading to a release of contaminants from the underground tanks or vault is sufficiently low, and further evaluation is not warranted. The probability of a range fire leading to a release of contaminants from the greenhouse, 215-C Gas Preparation Building, and 276-C Solvent Handling Facility is also of sufficiently low probability and consequence, and further evaluation is not warranted.

2.6.7 Earthquake

The Hanford Site is in a region of low to moderate seismicity. The historic record of earthquakes in the Pacific Northwest dates from about 1840. The early part of the record is based on newspaper reports of structural damage and human perception of the shaking (as classified by the Modified Mercalli intensity [MMI] scale) and is likely incomplete because the region was sparsely populated. Seismograph networks did not start providing earthquake locations and magnitudes of earthquakes in the Pacific Northwest until about 1960.

Large earthquakes (i.e., magnitude greater than 7 on the Richter scale) in the Pacific Northwest have occurred near Puget Sound, Washington, and near the Rocky Mountains in eastern Idaho and western Montana. A large earthquake of uncertain location occurred in north-central Washington in 1872. This event had an estimated maximum MMI ranging from VII to IX and an estimated Richter scale magnitude of approximately 7.

The seismicity of the Columbia Plateau, as determined by the rate of earthquakes and the historical magnitude of these events, is low when compared to other regions of the Pacific Northwest. In the central portion of the Columbia Plateau, the largest earthquakes near the Hanford Site occurred in 1918 and 1973 north of the Site. These events had Richter scale magnitudes of 4.4 and MMI intensities of V.

The PHA qualitatively considers the seismic event of 0.02g horizontal with two-thirds simultaneous vertical a, which is the Hanford Site design basis for Category 2 nuclear facilities.

The effects of seismic events acting upon the 241-CX tank system, 215-C Gas Preparation Building, and 276-C Solvent Handling Facility were addressed in the hazards identification and were evaluated in the PHA. Because the ability of the 241-CX tank system, 215-C Gas Preparation Building, and 276-C Solvent Handling Facility to withstand the current design criteria is not known, the PHA assumed the underground tanks, vault, greenhouse, 215-C Gas Preparation Building, and 276-C Solvent Handling Facility would fail. The hazards analysis concluded that the consequences of seismic-induced damage (i.e., release or exposure primarily to soil column) were not significant, and further evaluation was not warranted.

2.6.8 Ash and Snow

The Hanford Site is in a region subject to ashfall from volcanic eruptions. The three major volcanic peaks closest to the Hanford Site are Mt. Adams (100 mi away), Mt. Rainier (110 mi away), and Mt. Saint Helens (130 mi away).

Important historical ashfalls affecting this location were from eruptions of Glacier Peak about 10,000 years before present (BP), Mt. Mazama about 6,000 BP, and Mt. Saint Helens about 3,600 BP. The most recent ashfall resulted from the May 18, 1980, eruption of Mt. Saint Helens.

Although the probability of volcanic activity and ashfall is fairly low (especially in conjunction with snow), the Hanford Site design criteria for existing facilities specifies a roof design load of 24 lb/ft^2 for combined snow and ashfall.

On average, the Hanford Site receives 15 in. of snowfall each year, with a range varying from 0.3 to 56 in. (PNNL 1995). Snow loading is considered in the Hanford Site design criteria for combined roof loads as noted above.

The effects of ash and snow loads acting on the 241-CX tank system were addressed in the hazards identification, which concluded that ash and snow loads would have no effect on the underground storage tanks or vault. The effects of ash and snow loads acting on the 241-CX-72 greenhouse, 215-C Gas Preparation Building, and 276-C Solvent Handling Facility were evaluated in the PHA. Because the ability of the greenhouse, the 215-C Gas Preparation Building, and the 276-C Solvent Handling Facility to withstand the current design criteria is not known, the PHA assumed that greenhouse and the two buildings collapse under these conditions. Although collapse of these structures may result in a spread of contamination from the radioactive material areas (RMAs) inside the structures, it was concluded that the consequences would be minor, and further evaluation was not warranted.

2.6.9 External Explosion

External explosion potential is limited due to the relative isolation of the facility and the level of activity in the general area. The transportation of flammable gases, combustible liquids, and explosives on the Hanford Site is limited and controlled by a permit system.

An external explosion that would cause sufficient damage to the underground tanks and vault and lead to a significant release of contaminants is not probable. Although it could be postulated that an explosion of some magnitude could cause localized damage, no Hanford Site design criteria have been established for this hazard. An explosion of sufficient magnitude to demolish the 241-CX-72 greenhouse, 215-C Gas Preparation Building, and 276-C Solvent Handling Facility and result in a spread of contaminants from the RMAs inside the greenhouse was judged to be of sufficiently low probability, and further evaluation was not warranted.

2.6.10 Uncontrolled Releases (Accidents) from Nearby Facilities

Accidents at nearby facilities could occur and may require evacuation of the general area. Because the 241-CX tank system, 215-C Gas Preparation Facility, and 276-C Solvent Handling Facility are no longer operating, evacuation of personnel would not result in unmonitored processes that could lead to a release of contaminants. Evacuation of personnel who may be in the area would occur under the emergency preparedness program. The facility could be vacated for extended periods of time without significant concern.

2.6.11 Plane Crash

The likelihood of an aircraft crash on the Hanford Site is significantly reduced from past operations that involved frequent use of helicopters for security purposes. Hanford Site airspace is classified as "uncontrolled" airspace, and both commercial and private aircraft fly over the Site. The Federal Aviation Administration recommends that operators avoid flight below 2,400 ft amsl over the Site. Three airports are located within 25 mi of the Hanford Site, but no airports are located within 20 mi of the 241-CX tank system, 215-C Gas Preparation Building, and 276-C Solvent Handling Facility.

A plane crash analysis was previously performed for another major processing plant (the Plutonium Finishing Plant) on the Hanford Site. This analysis indicated the probability of an aircraft crash occurring at this major facility was less than 1.0×10^{-6} (WHC 1995). Based on this analysis, the probability of a plane crash at the 241-CX tank system, 215-C Gas Preparation Building, and 276-C Solvent Handling Facility (which are smaller targets) is considered an incredible event; accordingly, no further evaluation is warranted.

2.6.12 Transportation Accident and Vehicle Crash

An offsite transportation accident could occur near the Hanford Site. State Highway 240 is the closest public transportation route and is approximately 5 mi from the 241-CX tank system, 215-C Gas Preparation Building, and 276-C Solvent Handling Facility. Although this public road is used to transport commercial fuels and hazardous materials, an offsite transportation accident is not considered credible to impact the facility due to distance.

An onsite transportation accident or vehicle crash could occur and, should the vehicle strike the exposed tank risers or greenhouse, some structural damage could occur. However, the probability of the impact leading to enough structural damage that a release of contaminants would occur, is of sufficiently low probability, and further evaluation is not warranted.

Local evacuation could possibly be required if the vehicle was carrying hazardous materials. Because the facility would no longer be operating, evacuation of personnel would not result in unmonitored processes that could lead to a release of contaminants. Evacuation of personnel would occur under the emergency preparedness program. The facility could be vacated for extended periods of time without significant concern.

Figure 2-1. Schematic Diagram of 241-CX-70 Storage Tank.

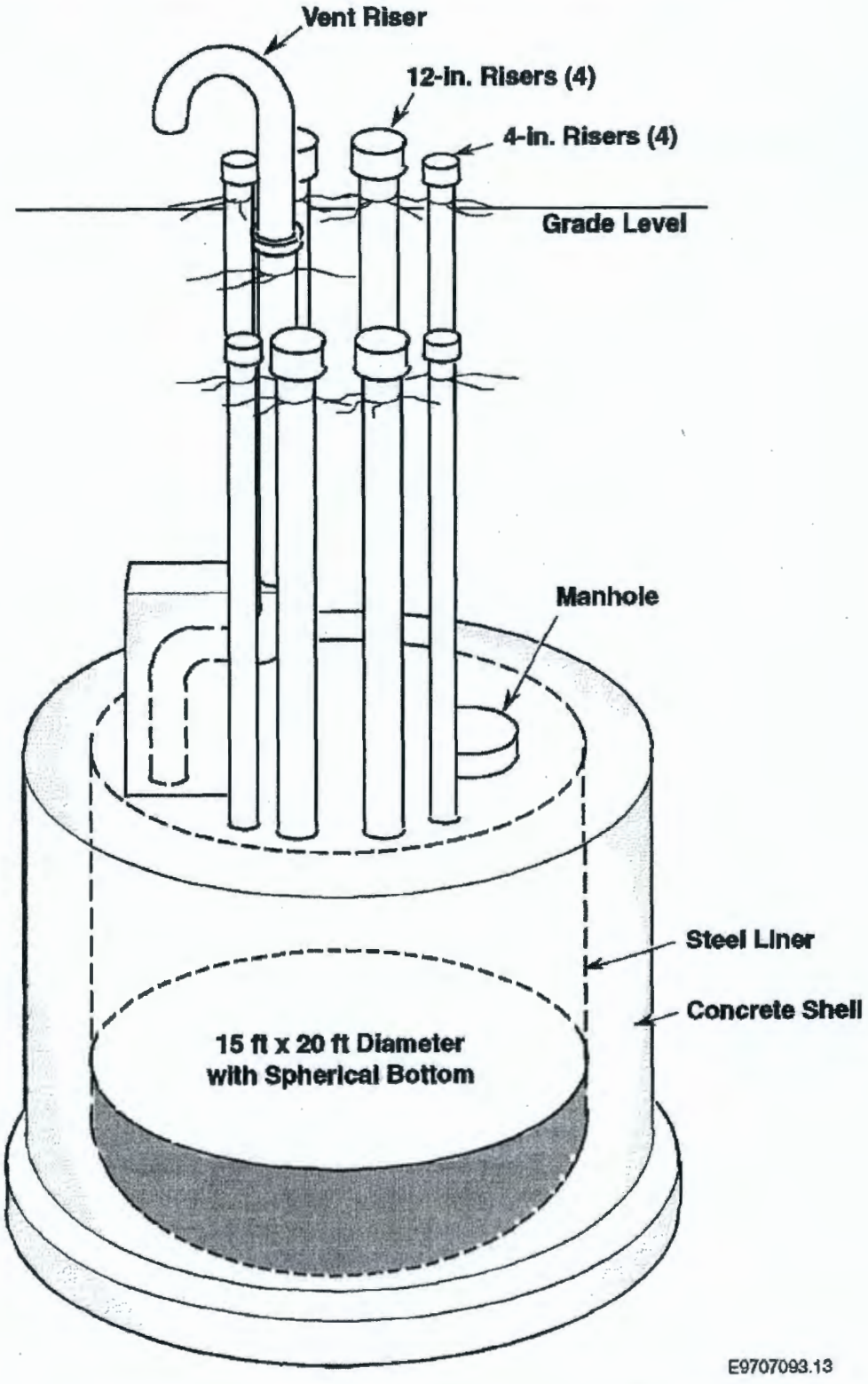

Figure 2-2. Schematic Diagram of 241-CX-71 Storage Tank.

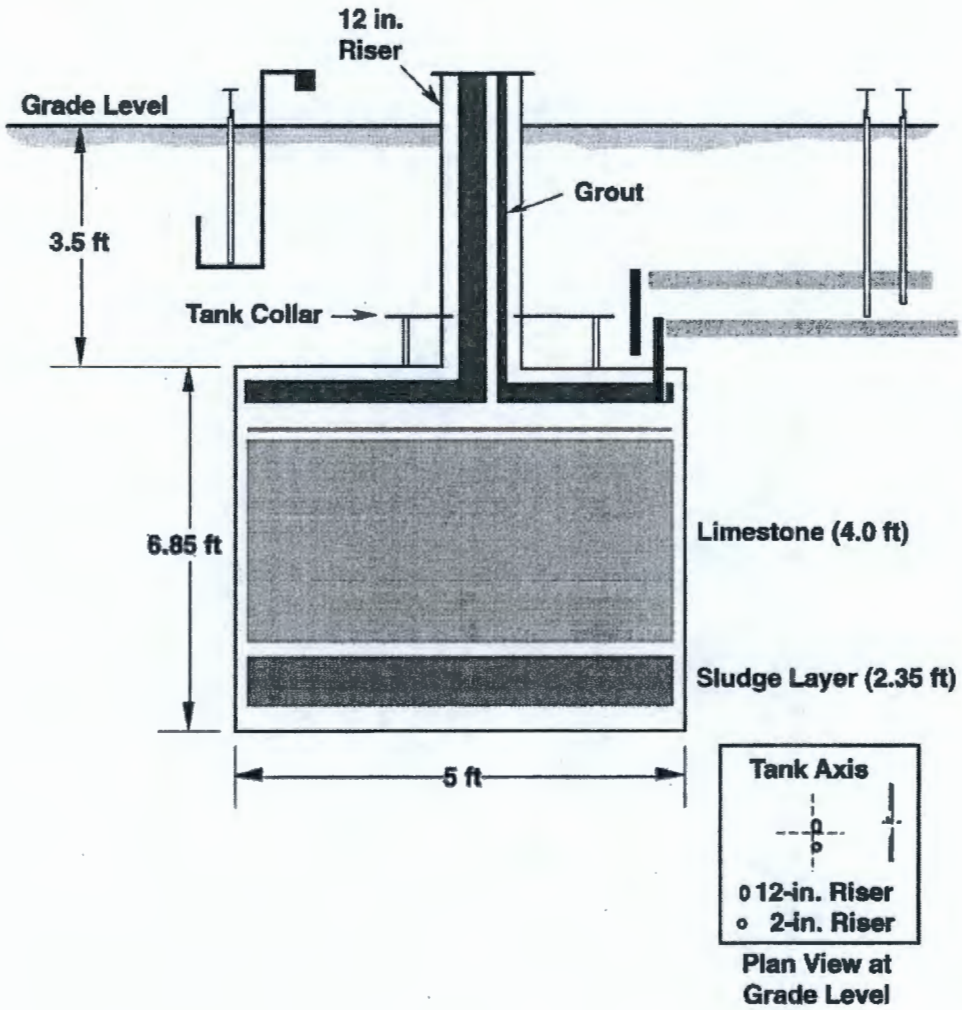

Figure 2-3. Schematic Diagram of 241-CX-72 Storage Tank.

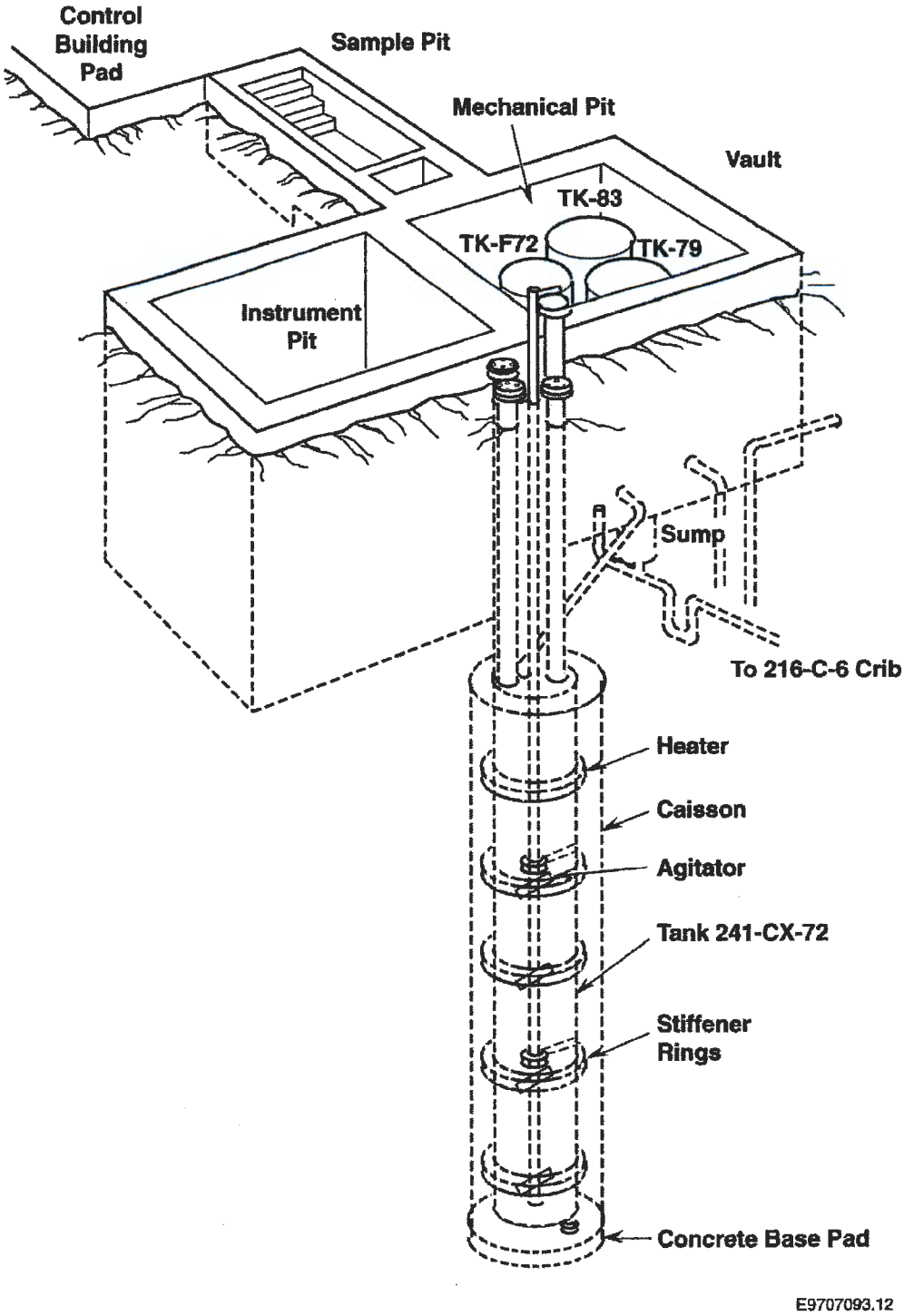

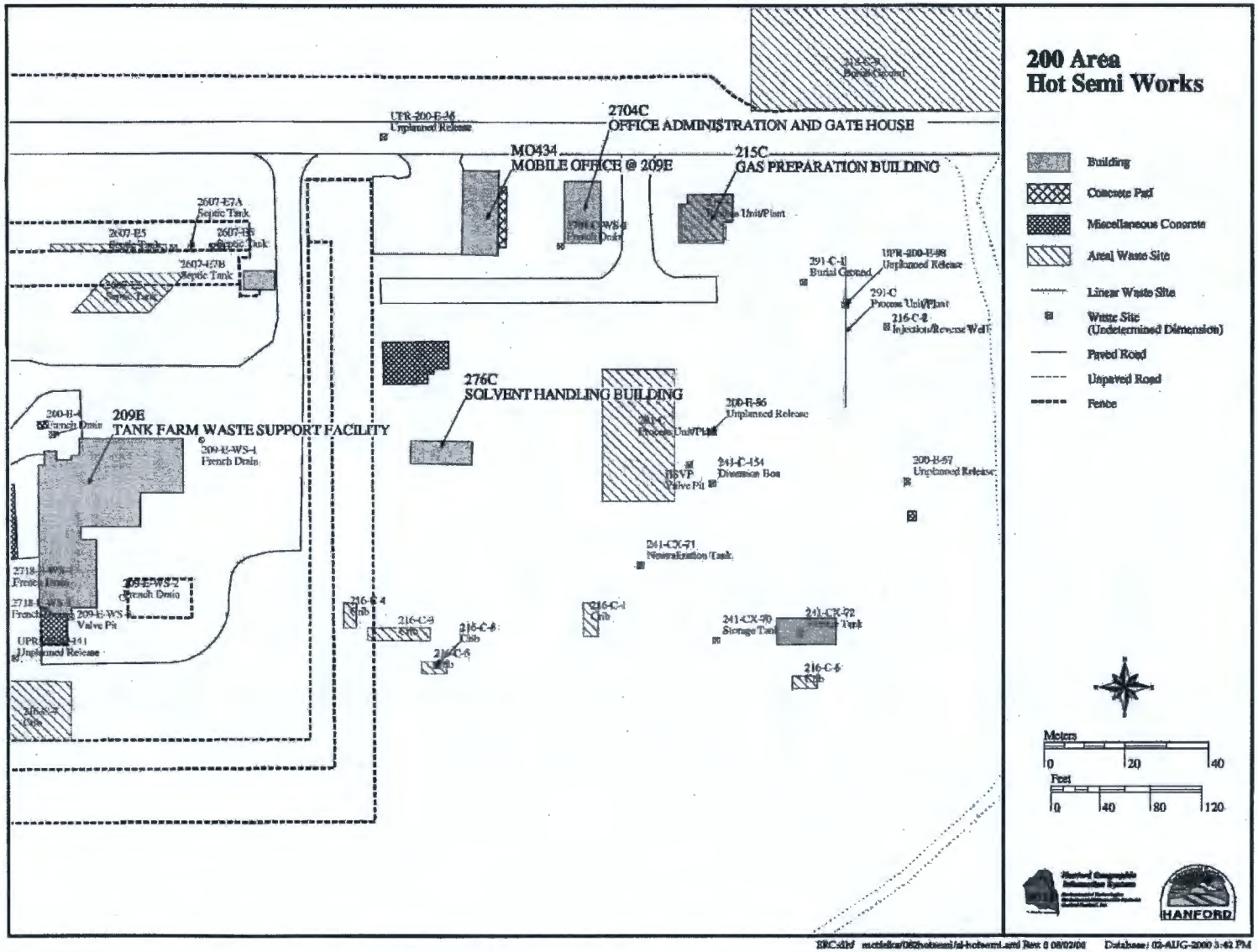

Figure 2-4. 200 Area Hot Semiworks.

3.0 OPERATIONS

3.1 PROJECT ACTIVITIES

All S&M project activities described in Section 2.3 will conform to BHI work process controls and procedures that guide all activities.

3.2 CONFINEMENT

There are no confinement systems or barriers that are relied upon to prevent or mitigate a release of contaminants. During the course of S&M, should subsidence or other anomalies (e.g., riser damage) be noted, appropriate responses will be taken to repair the damage.

3.3 SAFETY-SIGNIFICANT SYSTEMS

This project does not employ safety-significant structures, systems, or components. No credit was taken for the performance of any structure, system, or component. This is consistent with the FHC of the 241-CX tank system, 215-C Gas Preparation Building, and 276-C Solvent Handling Facility as "radiological."

3.4 ACTIVE SYSTEMS

Except for the 480-volt electrical service to the 241-CX-72 greenhouse, there are no active systems associated with the 241-CX tank system. The electrical supply is currently used to provide interior lighting and convenience outlets in the greenhouse.

The power feeds to 215-C and 276-C Buildings have been removed between the buildings and the former power pole.

4.0 HAZARD ANALYSIS

The hazard identification and PHA for the 241-CX tank system are contained in Appendix A. The results of the hazard evaluation were used to establish the FHC of "radiological," which is contained in Appendix B.

The hazards posed by the 241-CX tank system are primarily radiological and industrial in nature. As a result of the hazard identification, PHA, and workshop, it was concluded that the existing Environmental Restoration Contractor (ERC) institutional programs and controls (as discussed in Section 5.0) are adequate to control the relevant hazards.

Although natural phenomenon hazards events (e.g., seismic and high wind) could impact the greenhouse over the 241-CX-72 tank, the worst-case consequences of these events would be minor radiological releases from materials in the greenhouse RMAs that would be corrected by emergency response or normal work control. Although seismic events could damage the underground storage tanks and open a release path to the soil column, the consequences of these events would not be very significant. Releases resulting from fire or criticality were concluded to be improbable.

The hazards were identified from the information gathered during research on the 241-CX tank system and were confirmed during a facilitated hazards identification and evaluation workshop involving knowledgeable DOE and contractor staff with expertise in safety analysis, fire protection, chemical engineering, and previous operations knowledge/experience of the facility.

Appendix C evaluates the hazards, consequences, and existing mitigation activities already in place for 215-C the Gas Preparation Building and 276-C the Solvent Handling Facility. There are no significant or unique hazards that would require special controls. Natural phenomena hazards (e.g., earthquakes, high winds, or ash/snowfall) could pose a risk to the overall integrity of the structures because of unknown facility degradation. However, no significant quantities of hazardous or radioactive materials are present to cause significant releases to the environment or pose significant risk to workers.

5.0 CONTROL AND COMMITMENTS

5.1 SPECIAL CONTROLS

As a result of the hazards evaluation, it was concluded that no special controls were required to ensure the assumptions of the hazards analysis. No special controls are required to prevent or mitigate radiological or hazardous material releases.

5.2 PROJECT-SPECIFIC CONTROLS

The hazards analysis concluded that no project-specific controls are required.

5.3 PROGRAMMATIC CONTROLS

Normal programmatic controls, as described below, were determined to provide adequate protection.

5.3.1 Conduct of Operations

Conduct of operations (CONOPS) for S&M activities is addressed by the ERC CONOPS Graded Approach Applicability Matrix. This matrix identifies both the applicable elements of DOE Order 5480.19, *Conduct of Operations Requirements for DOE Facilities*, for S&M activities and the implementing documents for these activities. This graded approach to CONOPS has been approved by the U.S. Department of Energy, Richland Operations Office (RL). Changes to the ERC CONOPS program and matrix will occur subject to appropriate DOE review and approval and do not require evaluation to this document.

5.3.2 Work Controls

The S&M activities are scheduled and controlled by approved procedures and work packages. The work control procedures define responsibilities and requirements for preparing, scheduling, executing, and monitoring the status of activities.

One of three work processes is used to schedule and control work: (1) routine work, (2) scheduled maintenance work request, and (3) demand work request. Routine work is repetitive, familiar, has a low potential risk of exposing workers to unusual hazards, and does not require a work package or specific procedures.

Work packages identify the scope of work and safety and radiological requirements for the work to be performed. The packages are reviewed by appropriate functional groups (e.g., field engineering, safety and health, radiological control, and quality) to ensure that requirements and documentation are appropriate for the work to be performed.

A scheduled maintenance work request is generated for each recurring scheduled or preventive maintenance activity on a fixed cycle. The scheduled maintenance work request process uses task instructions to direct fixed-cycle maintenance activities. The task instructions are reviewed to ensure that safety and health hazards and appropriate controls are addressed.

If the need for a nonroutine activity is identified, a demand work request is generated. The work activity may be required to implement a new design, design change, corrective maintenance action, deactivation action, system isolation, etc.

5.3.3 Radiological Protection Program Controls

The radiological controls and protection program is defined in DOE-approved programs and BHI-approved procedures. This program implements the ERC's policy to reduce safety or health risks to levels that are as low as reasonably achievable (ALARA) and to ensure that workers are adequately protected. Appropriate dosimetry, radiological work permits, personnel protective equipment, ALARA planning, periodic surveys, and radiological control technician support are provided.

The radiological protection program implements the requirements of 10 *Code of Federal Regulations* (CFR) 835 and has been approved by DOE. Changes to the ERC radiological protection program will occur. Review and approval of such changes does not require evaluation in this document.

5.3.4 Worker Health and Safety Controls

The ERC health and safety program is composed of 10 elements: radiation protection, industrial safety, industrial hygiene, nuclear safety, fire protection, occupational health, hazardous waste operations, safety and health, emergency management, and ALARA. Implementing procedures have been developed for each program that define the scope, applicability, management, employee involvement, worksite analysis, hazard prevention and control, and training requirements associated with the work to be performed. Review and approval of changes to the ERC health and safety program do not require evaluation in this document.

5.3.5 Training Requirements

Personnel are trained and qualified to perform their assigned duties based on job-specific requirements. Personnel performing special processes must be qualified according to specific codes and standards. Qualifications are established by management. Facility-specific training on hazards associated with the facility is also provided for S&M workers. Special briefings are conducted when new or changing hazards are encountered.

Procedures define responsibilities and methods for establishing training requirements, course work, individual training plans, and training records.

5.3.6 Maintenance Requirements

There are no systems, structures, or components that require routine maintenance within the 241-CX tank system. Demand work packages may be prepared if specific repairs are required as a result of surveillance.

5.3.7 Configuration Control

Established configuration/change control processes ensure that proposed changes are reviewed in relation to the specified commitments. In the event that a discovery indicates a breach of these commitments, work ceases so stabilization and/or recovery actions may be identified and implemented as appropriate. The BHI off-normal event procedures describe the reporting process and protocol applicable to such a discovery. BHI-DE-01, EDPI 4.40-01 defines the management of change process and the requirements for facilities with a FHC of "radiological."

5.3.8 Quality Assurance

The ERC quality program is described in BHI-QA-01, *ERC Quality Program*, Parts I through III. Part I consolidates the quality program requirements of the BHI-DOE Prime Contract and applicable regulation and DOE orders, Part II describes how the quality program requirements are implemented through a system of manuals and procedures, and Part III describes how the ERC quality program will be implemented for nuclear scopes of work. BHI-QA-01 has been reviewed and approved by DOE as meeting the requirements of 10 CFR 830.120, "Quality Assurance Requirements."

5.3.9 Emergency Preparedness

The emergency management program (EMP) for the ERC complies with and implements the requirements of *Hanford Emergency Response Plan* (DOE-RL 1999) and ultimately applicable DOE orders. The EMP establishes a coordinated emergency response organization (ERO) capable of planning for, responding to, and recovery from industrial, security, or hazardous materials incidents.

The EMP ensures that these activities are integrated with similar activities of other Hanford Site contractors, RL, and relevant local, tribal, state, and Federal agencies. The EMP provides for organization control of emergencies; training; emergency preparedness drills, assessment, and classification; preparation of emergency procedures, plans, and guides; and post-accident re-entry and recovery.

The EMP defines the ERO that is responsible for managing emergency incidents affecting ERC facilities and providing as-needed emergency response assistance elsewhere on the Hanford Site. The ERC ERO provides representatives and support to the Hanford Site ERO and emergency operation centers.

6.0 REFERENCES

10 CFR 830.120, "Quality Assurance Requirements," *Code of Federal Regulations*, as amended.

10 CFR 835, "Occupational Radiation Protection," *Code of Federal Regulations*, as amended.

BHI, 1998, *Engineering Guide for Performing Hazard Analysis and Final Hazard Classification*, 0000X-EG-N0004, Rev. 0, Bechtel Hanford, Inc., Richland, Washington.

BHI-DE-01, *Design Engineering Procedures Manual*, Bechtel Hanford, Inc., Richland, Washington.

BHI-FS-02, *Field Support Work Instructions*, Bechtel Hanford, Inc., Richland, Washington.

BHI-QA-01, *ERC Quality Program*, Bechtel Hanford, Inc., Richland, Washington.

DOE, 1985, *Environmental Assessment Relating to the Decommissioning of Strontium Semiworks Facility*, DOE/EA-0259, Rev. 0, U.S. Department of Energy, Washington, D.C.

DOE, 1992, *Hazard Classification and Accident Analysis Techniques for Compliance with DOE Order 5480.23, Nuclear Safety Analysis Reports*, DOE-STD-1027-92, U.S. Department of Energy, Washington, D.C.

DOE Order 5480.19, *Conduct of Operations Requirements for DOE Facilities*, as amended U.S. Department of Energy, Washington, D.C.

DOE-RL, 1993a, *Semiworks Source Aggregate Area Management Study Report*, DOE/RL-92-18, Rev. 0, U.S. Department of Energy, Richland Operations Office, Richland, Washington.

DOE-RL, 1993b, *Hanford Strontium Semiworks Project and 241-CX-Tank Information*, CCN 9302902 XREF 9258782D, letter from R. D. Freeberg (DOE-RL) to D.C. Nylander (Ecology), dated April 14, 1993, U.S. Department of Energy, Richland Operations Office, Richland, Washington.

DOE-RL, 1999, *Hanford Emergency Response Plan*, DOE/RL-94-02, as amended, U.S. Department of Energy, Richland Operations Office, Richland, Washington.

Ecology, 1994, *Tank 241-CX-72 at the Strontium Semiwork*, CCN 003265, letter to J. D. Bauer (DOE) and R. E. Lerch (WHC), dated July 7, 1994, Washington State Department of Ecology, Kennewick, Washington.

Ecology, EPA, and DOE, 1998, *Hanford Federal Facility Agreement and Consent Order*, as amended, Washington State Department of Ecology, U.S. Environmental Protection Agency, and U.S. Department of Energy, Olympia, Washington.

Egge, R. G., 1997, *Hanford Surplus Facilities Hazards Identification Documents*, BHI-00066, Rev. 4, Bechtel Hanford, Inc., Richland, Washington.

GE, 1951, *Hot Semiworks Manual, Part 1*, HW-22955, General Electric Company, Richland, Washington.

Kiser, S. K., and T. L. Witt, 1994, *Hanford Surplus Facilities Programs Facilities Listings and Descriptions*, WHC-SP-0331, Rev. 1, Westinghouse Hanford Company, Richland, Washington.

PNNL, 1995, *Climatological Data Summary 1994, with Historical Data*, PNL-10553, Pacific Northwest National Laborartory, Richland, Washington.

PNNL, 1996, *Hanford Site National Environmental Policy Act (NEPA) Characterization*, PNL-6415, Rev. 8, Pacific Northwest National Laboratory, Richland, Washington.

RHO, 1982, *Rockwell Retired Contaminated Facility Listing and Description*, SD-DD-FL-001, Rockwell Hanford Operations, Richland, Washington.

RHO, 1984, *The Safety Analysis Report for the Decontamination and Decommissioning of the Strontium Semiworks Complex*, SD-WM-SAR-003, Rev. 0, Rockwell Hanford Operations, Richland, Washington.

Sherman, C. D., 2000, *Final Report for Interim Stabilization of Strontium Semi-Works (200-E-41)*, BHI-01346, Rev. 0, Bechtel Hanford, Inc., Richland, Washington.

WHC, 1988, *Tank 241-CX-70 Waste Removal Assessment*, WHC-SD-DD-TI-034, Rev. 0, Westinghouse Hanford Company, Richland, Washington.

WHC, 1989a, *Engineering Study Tank 241-CX-71 Alternative Sampling Methods*, WHC-SD-DD-ES-007, Rev. 0, Westinghouse Hanford Company, Richland, Washington.

WHC, 1989b, *Radiological Evaluation of Hot Semiworks Waste Tank 241-CX-72*, WHC-SD-CP-TI-148, Rev. 0, Westinghouse Hanford Company, Richland, Washington.

WHC, 1989c, *Recommendations for the Sampling and Decommissioning of Tank 241-CX-72*, WHC-SD-DD-ES-008, Rev. 0, Westinghouse Hanford Company, Richland, Washington.

WHC, 1989d, *Tank 241-CX-72 Preliminary Waste Characterization*, WHC-SD-DD-TI-040, Rev. 0, Westinghouse Hanford Company, Richland, Washington.

WHC, 1990, *Plan and Approach for Completion of Decommissioning of Strontium Semiworks Plant,* WHC-MR-0144, Westinghouse Hanford Company, Richland, Washington.

WHC, 1991, *Tank 241-CX-71 Waste Characterization*, WHC-SD-DD-TI-058, Rev. 0, Westinghouse Hanford Company, Richland, Washington.

WHC, 1992, *Literature Search for Process Knowledge To Characterize the Waste in Tank 241-CX-72,* WHC-SD-DD-TI-070, Westinghouse Hanford Company, Richland, Washington.

WHC, 1993, *Tank 241-CX-72 White Paper*, Westinghouse Hanford Company, Richland, Washington.

WHC, 1995, *Plutonium Finishing Plant Final Safety Analysis Report*, WHC-SD-CP-SAR-021, Westinghouse Hanford Company, Richland, Washington.

APPENDIX A

241-CX TANK SYSTEM PRELIMINARY HAZARD ANALYSIS

TABLE OF CONTENTS

A 241-CX TANK SYSTEM PRELIMINARY HAZARD ANALYSIS ..... A-i

A.1 INTRODUCTION A-1

A.2 HAZARD IDENTIFICATION A-1

A.2.1 Objective A-1
A.2.2 Methodology A-1
A.2.3 Radiological Inventory A-2
A.2.4 Nonradiological Inventory A-3
A.2.5 Hazards Identification Table A-3

A.3 HAZARDS EVALUATION A-4

A.3.1 Consequence Ranking A-4
A.3.2 Likelihood Ranking A-5
A.3.3 Evaluation of Preliminary Hazard Analysis at Workshop A-6

A.4 REFERENCES A-7

TABLES

A-1 241-CX-70 Tank Inventory Information Identification/Evaluation A-11
A-2 241-CX-71 Tank Inventory Information Identification/Evaluation A-13
A-3 241-CX-72 Tank Inventory Information Identification/Evaluation A-16
A-4 241-CX Tank System Hazard Identification A-19
A-5 241-CX Tank System Preliminary Hazard Analysis A-28

ACRONYMS

BHI	Bechtel Hanford, Inc.
DOE	U.S. Department of Energy
FHC	final hazard classification
IMUST	inactive miscellaneous underground storage tank
PHA	preliminary hazard analysis
RHO	Rockwell Hanford Operations

APPENDIX A

241-CX TANK SYSTEM PRELIMINARY HAZARD ANALYSIS

A.1 INTRODUCTION

This appendix contains the preliminary hazard analysis (PHA) for the 241-CX tank system, which includes the hazards identification and hazards evaluation. Section A2.0 identifies the objective and methodology used to identify hazards, addresses the disparities between various published estimates of radiological inventory, describes nonradiological inventories, and explains the format and content of the hazards identification table. Section A3.0 describes the hazards evaluation that was performed and provides the PHA table, the qualitative ranking criteria used in the PHA, and a summary of the hazards identification/evaluation workshop that was conducted. As a result of the PHA and hazards identification/evaluation workshop, it was concluded that no events identified in the PHA were determined to require additional detailed hazard evaluation.

A.2 HAZARD IDENTIFICATION

A.2.1 Objective

The objective of the hazard identification process is to provide a basis from which to analyze the hazards associated with a facility. To achieve this objective, the hazards identification process must address the following:

- Characteristics of the inventory of hazardous substances in the facility
- Sources of energy inside the facility capable of interacting with those inventories
- Sources of energy outside the facility capable of interacting with those inventories
- Nonroutine hazards unique to the facility.

A.2.2 Methodology

The hazards identified during the hazard identification process were generated from various sources of information using the following methodology:

- Relevant documents were researched (e.g., drawings, published reports, and task instructions) to identify the inventories of hazardous substances within the 241-CX tank system.

- Interviews with cognizant operations, engineering, and management personnel were conducted.

- Walkdowns were performed by analysts.

- Inactive miscellaneous underground storage tank (IMUST) concerns were discussed with the U.S. Department of Energy (DOE) staff.
- Additional research and evaluation of IMUST safety issues was performed.
- A hazard identification/evaluation workshop was conducted with cognizant DOE and contractor staff to review the identified hazards and the hazards evaluation.

A.2.3 Radiological Inventory

BHI-01087, *Preliminary Hazard Classification for the 241-CX Tank System* (BHI 1997b), stated that further investigation was needed because the inventory of the 241-CX-72 tank was suspect and did not correlate well with other data sources. For purposes of preliminary hazard classification, the inventories assumed for the 241-CX-70 and 241-CX-71 tanks were also based on published historical data for which no technical basis was provided.

Table 2-2 of DOE-RL (1993) identifies the major radionuclides of interest for the Semiworks Aggregate Area. This table identifies the major isotopes of interest (for all former operations of the Semiworks Facility) as follows: uranium-238, cesium-137, ruthanium-106, strontium-90, cobalt-60, hydrogen-3, carbon-14, europium-134, plutonium-238, plutontium-239, and plutonium-240. Of this list of isotopes, uranium-238, cesium-137, strontium-90, cobalt-60, hydrogen-3, plutonium-239, and plutonium-240 are identified for the 241-CX-71 tank and uranium-238, cesium-137, strontium-90, and plutonium for the 241-CX-72 tank. No isotopes of interest were identified for the 241-CX-70 tank (presumably because all waste had been removed from the tank at the time of this publication).

A number of published documents were obtained and evaluated for tank inventory information. When inventory information was provided, it was summarized and arranged in chronological order. A definite trend of citing prior data estimates (much of which could be tracked back to a 1982 Rockwell Hanford Operations (RHO) document [RHO 1982]) was evident. In general, most published estimates from the 1980s to the present were based in some way on the RHO data.

Although the RHO document (1982) did not provide a technical basis for the estimates (other than based on process knowledge), the RHO estimate for the 241-CX-70 tank correlated with a later publication (RHO 1984) that cited similar tank inventory estimates based on sludge analysis in 1976. This would support the presumption that process knowledge estimates were either reasonable or perhaps had some technical (sample or other analytical) basis not contained in current records.

With regard to the confidence level that the inventory estimates are conservative, as described in Appendix A, Section A2.3 (and further evaluated in Tables A-1 through A-3), much of the inventory information is based on historical records that had no technical basis. Where inventory information was in conflict, the Bechtel Hanford, Inc.(BHI) evaluation of these records (as documented in Tables A-1 through A-3) provided a technical basis for using or dismissing information to arrive at best available estimated tank inventories. Without detailed

characterization of the tanks, BHI can neither confirm nor refute the prior documented estimates and must presume that the documented estimates of inventory are essentially accurate.

The chronological inventory information is tabulated and evaluated for each tank in Tables A-1 through A-3. The last column of each table identifies the estimates of tank inventories that (based on the evaluation) were deemed "best available data," were subsequently reflected in the hazards identification table, and were used to prepare the final hazard classification (FHC).

A.2.4 Nonradiological Inventory

A number of process chemicals were known to be used at the Strontium Semiworks Complex and were previously reported in Table 2-6 of DOE-RL (1993). However, as noted in Table 2-3 of DOE-RL (1993), no information is available regarding the inventories and species of chemicals in the three 241-CX tanks. Without extensive characterization of tank waste residuals, no definite inventory estimates can be made. It is generally accepted that the hazards associated with chemical inventories are negligible or minor as compared to the radionuclide hazards.

A.2.5 Hazards Identification Table

The results of the hazards identification (including the inventories assumed for each tank) are presented in Table A-4. Hazards associated with IMUST safety issues (i.e., hydrogen generation/buildup, ferrocyanide reactivity, organic salt reactivity, criticality, and flammability) are addressed in the hazard identification table. The six column headings and content of the hazards identification table are described in the following subsections.

A.2.5.1 Column 1: Hazard Type

Column 1 identifies the type of hazard investigated. Hazard types investigated include radiological (including radioactive material and direct radiation), toxic material, carcinogens, biohazards, asphyxiants, flammable/combustible material, reactive material, explosive material, electrical energy, thermal energy, kinetic energy, high pressure, criticality, earthquake, flood, ash/snow, lightning, and high winds.

A.2.5.2 Column 2: Location

Column 2 identifies the location investigated for the presence of the hazard type. Refer to Chapter 2.0, Facility Description, for detailed information.

A.2.5.3 Column 3: Form

Column 3 specifies the form of the hazard type. This column is not intended to provide a detailed identification of the chemical (e.g., oxide) or physical form of the hazard type (e.g., crystalline). Such detail is not considered at the hazard identification stage of a safety analysis.

A.2.5.4 Column 4: Quantity

Column 4 quantifies the hazard. Measured values are presented when relevant and available.

A.2.5.5 Column 5: Remarks

Column 5 presents information that provides a better understanding of the hazard type, location, form, and quantity.

A.2.5.6 Column 6: References

Column 6 lists the information sources used to identify the location, form, and quantity of a given hazard type.

A.3 HAZARDS EVALUATION

A qualitative and systematic examination of the hazards associated with the facility was conducted to obtain the following information on the 241-CX tank system:

- Identify the events that could lead to releases of hazardous substances
- Rank these events based on potential consequences and frequency
- Identify engineered mitigative and preventative features that serve to control the hazard
- Identify the commitments and administrative controls necessary to manage the hazard.

The results of this examination are reflected in the PHA (Table A-5). An explanation of the qualitative consequence and likelihood ranking criteria used in the table are provided in Section 3.1.

A.3.1 Consequence Ranking

A.3.1.1 Consequence Rank I – Catastrophic

"Catastrophic" is the highest consequence rank that can be assigned in the hazard analysis. This rank addresses any event that can cause death and includes exposure to radioactive or toxic materials. This rank includes large exposures of offsite and onsite individuals to hazardous materials (i.e., no differentiation is intended between offsite and onsite individuals).

A.3.1.2 Consequence Rank II – Severe

The "severe" consequence rank encompasses events that could produce severe injury, significant lost work time, or long-term disability. This rank refers to acute consequences, implying the radioactive or toxic material exposure must be severe and occur in a relatively short time after exposure. For example, radiation doses on the order of 200 rem result in severe debilitating effects that would be considered acute and severe. Similarly, contact with toxic chemicals (e.g., acids, bases, or toxic gases) that could produce severe injury would be considered to have

prompt effects. As is the case for the "catastrophic" consequence rank, no differentiation is intended between the offsite and onsite individuals.

A.3.1.3 Consequence Rank III – Unplanned Releases

The "unplanned release" consequence rank is used to account for events that could release hazardous materials outside the facility but would not result in a "severe" or "catastrophic" designation. Unlike the "severe" and "catastrophic" consequence rank, the "unplanned release" rank is intended to also encompass environmental insults. Consequence rank III is further divided into three sub-groups to account for varying insults to the environment: (1) releases resulting in significant amounts of the environment being contaminated, (2) releases resulting in small amounts of the environment being contaminated, and (3) releases that may or may not exceed regulatory allowables but would affect insignificant amounts of the environment.

A.3.1.4 Consequence Rank IV – Minor

The "minor" consequence rank encompasses events that result in minor injury but no release outside of the facility. While many events that would receive this designation are screened out of the hazards analysis, some may be included to provide documentation that were considered as potential event initiators. This consequence rank includes effects from biological hazards such as animal and insect bites or stings or disease from contact with bird or bat droppings.

A.3.2 Likelihood Ranking

A.3.2.1 Likelihood Rank A – Frequent

Likely to occur frequently. Such an event could occur on an annual basis.

A.3.2.2 Likelihood Rank B – Probable

Likely to occur several times in the life of an item. Such an event could occur at a frequency of once in 10 years ($1x10^{-1}$/yr).

A.3.2.3 Likelihood Rank C – Occasional

Likely to occur sometime in the life of an item. Such an event could occur at a frequency of once in 100 years ($1x10^{-2}$/yr).

A.3.2.4 Likelihood Rank D – Remote

Unlikely but possible to occur in the life of an item. Such an event could occur at a frequency of once in 10,000 years ($1x10^{-4}$/yr).

A.3.2.5 Likelihood Rank E – Improbable

So unlikely that it can be assumed occurrence will not be experienced. Such an event could occur at a frequency of once in 1 million years ($1x10^{-6}$/yr).

A.3.3 Evaluation of Preliminary Hazard Analysis at Workshop

The PHA was evaluated in the hazard identification/evaluation workshop by cognizant DOE and contractor staff. As a result of the workshop, it was suggested that both the safety issues associated with the IMUSTs and the hazards associated with natural phenomenon be integrated into the hazards identification table. The hazards identification table would then dismiss (where appropriate) noncredible hazards (e.g., high wind acting on underground tanks) at the first opportunity.

As noted in Section A2.3, a number of published documents provided estimates of the radiological inventories of the 241-CX tanks. As noted in Section A2.4, similar information does not exist for chemicals.

While it is true that specific information is not available concerning the remaining inventories, 241-CX-71 and 241-CX-72 tanks, and species of chemicals in the three 241-CX tanks, the inventories/species of chemicals were qualitatively assessed (Table A-4) as not likely to be significant for toxics, carcinogens, and reactives. Volatiles were also noted as likely to have evaporated.

The 241-CX tanks were also identified as IMUST tanks in WHC-EP-0775 (WHC 1994a), which provided a relative risk-ranking assessment of each tank. This document evaluated a number of safety issues using algorithms and published data (where available). During research performed for this auditable safety analysis, it was noted that some of the 241-CX tank information contained in WHC (1994a) was in error. The PHA reflects the most accurate information available.

It was generally accepted that the 241-CX tank system presented no significant or unique hazards during long-term surveillance and maintenance. The fact that all three tanks are buried and either empty (or contain wastes grouted in place) is significant. Retrieval of wastes or excavation of the underground tanks (which could have significant exposure potential to workers) are not addressed in this hazards analysis and will not be authorized by this document.

It was generally accepted that the probability of a seismic event causing enough damage to lead to a release of material (primarily to the soil column) was possible but was more likely improbable. Furthermore, the consequences of this event (release or exposure primarily to the soil column) would not be very significant.

Similarly, the probability of a fire occurring in the waste tanks was equally difficult to conceive, as there is no readily ignited fuel source (the waste could burn or char if exposed to high enough temperatures), no realistic ignition sources, and limited oxygen to sustain combustion.

Criticality was not a viable hazard, as there is not enough fissionable material in any of the tanks to sustain a chain reaction under any set of circumstances (including perfect moderation, reflection, and geometry). The upper bound estimate for the 241-CX-72 tank (i.e., the tank containing the greatest fissionable inventory) was 200 g of plutonium. The guaranteed subcritical mass limit for plutonium is 450 g.

The PHA also documents the evaluation of other hazards. Although most events were qualitatively assessed as "unlikely, but possible to occur" (because it could not be proven they would **not** occur), none of the events received a consequence ranking of greater than III-3 (i.e., would affect insignificant amounts of the environment).

In most instances, the hazards evaluation concluded that no preventive or mitigative structures, systems, or components or administrative controls were required to lessen the likelihood or consequences of these events.

Post-event response (e.g., seismic event results in failure of tanks) would typically rely on the emergency management program. Site demarcation/posting would aid in the prevention of vehicles damaging risers, and should water instrusion occur, corrective actions to remove would be considered under normal work processes. It was concluded that normal institutional controls were adequate for worker protection and control of hazards. Accordingly, no events of the PHA were determined to require additional detailed hazard evaluation or the development of special controls.

A.4 REFERENCES

BHI, 1997a, *Criticality Evaluation 241-CX Tank System General S&M*, 0200E-CE-N0007, Rev 0., Bechtel Hanford, Inc., Richland, Washington.

BHI, 1997b, *Preliminary Hazard Classification for the 241-CX Tank System*, BHI-01087, Rev. 0, Bechtel Hanford, Inc., Richland, Washington.

DOE, 1985, *Environmental Assessment Relating to the Decommissioning of Strontium Semiworks Facility*, DOE/EA-0259, Rev. 0, U.S. Department of Energy, Washington, D.C.

DOE-RL, 1993, *Semiworks Source Aggregate Area Management Study Report*, DOE/RL-92-18, Rev. 0, U.S. Department of Energy, Richland Operations Office, Richland, Washington.

Ecology, 1994, *Tank 241-CX-72 at the Strontium Semiwork*, CCN 003265, letter to J. D. Bauer (DOE) and R. E. Lerch (WHC), dated July 7, 1994, Washington State Department of Ecology, Kennewick, Washington.

RHO, 1982, *Rockwell Retired Contaminated Facility Listing and Description*, SD-DD-FL-001, Rev. 0-0, Rockwell Hanford Operations, Richland, Washington.

RHO, 1984, *The Safety Analysis Report for the Decontamination and Decommissioning of the Strontium Semiworks Complex*, SD-WM-SAR-003, Rev. 0, Rockwell Hanford Operations, Richland, Washington.

WHC, 1988, *Tank 241-CX-70 Waste Removal Assessment*, WHC-SD-DD-TI-034, Rev. 0, Westinghouse Hanford Company, Richland, Washington.

WHC, 1989a, *Engineering Study Tank 241-CX-71 Alternative Sampling Methods*, WHC-SD-DD-ES-007, Rev. 0, Westinghouse Hanford Company, Richland, Washington.

WHC, 1989b, *Radiological Evaluation of Hot Semiworks Waste Tank 241-CX-72*, WHC-SD-CP-TI-148, Rev. 0, Westinghouse Hanford Company, Richland, Washington.

WHC, 1989c, *Recommendations for the Sampling and Decommissioning of Tank 241-CX-72*, WHC-SD-DD-ES-008, Rev. 0, Westinghouse Hanford Company, Richland, Washington.

WHC, 1989d, *Tank 241-CX-71 Preliminary Waste Characterization*, WHC-SD-DD-TI-039, Rev. 0, Westinghouse Hanford Company, Richland, Washington.

WHC, 1989e, *Tank 241-CX-72 Preliminary Waste Characterization*, WHC-SD-DD-TI-040, Rev. 0, Westinghouse Hanford Company, Richland, Washington.

WHC, 1990a, *An Estimation of the Radionuclide Content of Tank 241-CX-72*, WHC-SD-DD-TI-051, Rev. 0, Westinghouse Hanford Company, Richland, Washington.

WHC, 1990b, *Plan and Approach for Completion of Decommissioning of Strontium Semiworks Plant*, WHC-MR-0144, Westinghouse Hanford Company, Richland, Washington.

WHC, 1990c, *Safety Evaluation for Interim Waste Management Activities in Tank 241-CX-70, Tank 241-CX-71, and Tank 241-CX-72*, WHC-SD-DD-SAD-001, Rev. 0, Westinghouse Hanford Company, Richland, Washington.

WHC, 1991a, *Summary of Radioactive Underground Tanks Managed By Hanford Restoration Operations*, WHC-SD-DD-TI-057, Rev. 0, Westinghouse Hanford Company, Richland, Washington.

WHC, 1991b, *Tank 241-CX-71 Waste Characterization*, WHC-SD-DD-TI-058, Rev. 0, Westinghouse Hanford Company, Richland, Washington.

WHC, 1992a, *CSER 92-003: Classification of Hot Semiworks Waste Tank CX-72 as a Limited Control Facility*, WHC-SD-SQA-CSA 20351, Westinghouse Hanford Company, Richland, Washington.

WHC, 1992b, *Facility Decommissioning Report for Tank 241-CX-70*, WHC-SD-DD-TI-071, Rev. 0, Westinghouse Hanford Company, Richland, Washington.

WHC, 1992c, *Literature Search for Process Knowledge To Characterize the Waste in Tank 241-CX-72,* WHC-SD-DD-TI-070, Westinghouse Hanford Company, Richland, Washington.

WHC, 1992d, *Miscellaneous Underground Radioactive Waste Tanks*, WHC-EP-0560, Westinghouse Hanford Company, Richland, Washington.

WHC, 1992e, *Semiworks Aggregate Area Management Study Technical Baseline Report*, WHC-SD-EN-ES-019, Rev. 0, Westinghouse Hanford Company, Richland, Washington.

WHC, 1993, *Tank 241-CX-72 White Paper*, S.G. Marske (author), Westinghouse Hanford Company, Richland, Washington.

WHC, 1994a, *Engineering Study of 50 Miscellaneous Inactive Underground Radioactive Waste Tanks Located at the Hanford Site, Washington*, WHC-SD-EN-ES-040, Rev. 0, Westinghouse Hanford Company, Richland, Washington.

WHC, 1994b, *Safety Issue Resolution Strategy Plan for Inactive Miscellaneous Underground Storage Tanks*, WHC-EP-0775, Westinghouse Hanford Company, Richland, Washington.

Table A-1. 241-CX-70 Tank Inventory Information Identification/Evaluation. (2 Pages)

Tank	Inventory	Source Document	Date of Source Document	Technical Basis Evaluation
CX-70	3 Ci Pu 6,000 Ci beta	SD-DD-FL-001, p. 65 (RHO 1982)	July 1982	No - Stated as process knowledge.
	4,270 Ci Sr-90 870 Ci Cs-137 3.4 Ci TRU Filled with 10,700 gal sludge with puddle of liquid less than 1 in. deep (100 gal)	SD-WM-SAR-003, pp. 5-56 (RHO 1984)	March 1984	Yes - Estimate based on April 1976 sludge analysis. Waste has been removed from tank.
	3 Ci alpha 6,000 Ci beta	DOE/EA-0259, p. 51 (DOE 1985)	May 1985	No - Probably restatement of SD-DD-FL-001 (RHO 1982).
	TRU content = 50 nCi/g on average for liquid/solids TRU content of solids phase estimated at 300 nCi/g (250 gal sludge and 500 gal liquid)	SD-DD-TI-034, pp. 3-4 (WHC 1988)	October 1988	Yes - Estimate based on three scoop samples taken after final sluicing and preliminary lab results. Solids versus liquids phase amounts estimated.
	Solids portion contains approx. 300 nCi/g TRU	WHC-MR-0144, p. 1 (WHC 1990b)	May 1990	No - Probably repeat of SD-DD-TI-034 (WHC 1990c) estimate.
	Liquids = <250 nCi/g Cs-137 and <2 nCi/g TRU Solids = <690 nCi/g TRU, <1,530 nCi/g of Cs-137, and <38,000 nCi/g of Sr-90	WHC-SD-DD-SAD-001, pp. 21-23 (WHC 1990c)	September 1990	Yes - Estimate based on final lab results of three scoop samples of residual waste w/worst-case concentration of TRU assumed. Cs-137 and Sr-90 estimated based on total beta activity and partitioned based on analyses of sluice samples. Waste has been removed from tank.
	<1 g Pu TRU = 390 to 690 nCi/g solids	WHC-SD-DD-TI-057, pp. 4 and 28 (WHC 1991a)	October 1991	No - Restates same estimate of WHC-SD-SAD-001 (WHC 1990c) based on final laboratory results; waste has been removed from tank.
	3 Ci alpha 6,000 Ci beta	WHC-SD-EN-ES-019, p. 28 (WHC 1992e)	February 1992	No - Text restates DOE/EA-0259 (DOE 1985) estimate.

Table A-1. 241-CX-70 Tank Inventory Information Identification/Evaluation. (2 Pages)

Tank	Inventory	Source Document	Date of Source Document	Technical Basis Evaluation
CX-70	No estimate provided. All waste removed, dose readings from emptied interior in February 1992 range from 5 mr at top, to 15,000 mrad/hr beta at bottom.	WHC-SD-DD-TI-071, p. 41 (WHC 1992b)	November 1992	Final decommissioning report documenting radiological survey. No residual inventory estimate provided.
	No estimates provided. Tank is empty.	DOE/RL-92-18, Table 2-2 (DOE-RL 1993)	May 1993	No - Probably restatement of WHC-SD-DD-TI-071 (WHC 1992b).
	No estimates provided.	WHC-SD-EN-ES-040 (WHC 1994a)	February 1994	No estimates provided.
	No estimates provided	WHC-EP-0775, p. B-6 (WHC 1994b)	September 1994	No estimates provided.
	2.87 E+02 Ci Sr 90 1.34 E+01 Ci Cs 137 3.41 E-02 Ci Am 241 1.16 E-01 Ci Pu 239	BHI-01087, p. 7 (BHI 1997b)	August 1997	5% of 6,000 Ci beta and 5% of 3 Ci alpha originally estimated in SD-DD-FL-001 (RHO 1982) assumed to remain after waste removal (waste removal 95% efficient). Isotopic composition assumed in accordance with WHC-SD-DD-TI-071.
	2.87 E+02 Ci Sr 90 1.34 E+01 Ci Cs 137 3.41 E-02 Ci Am 241 1.16 E-01 Ci Pu 239	Estimated inventory for FHC		The RHO (1982) estimate correlates well with estimates based on April 1976 sludge samples reported in RHO (1984). The RHO base data (3 Ci Pu, 6,000 beta) is selected. The assumption of BHI-01087 (BHI 1997b), assuming 95% waste removal effectiveness appears to be very conservative, as seen from photographs of the tank interior, there is very little residual in the tank. The BHI-01087 data (BHI 1997b) will be retained for FHC purposes.

TRU = transuranic
FHC = final hazard classification

Table A-2. 241-CX-71 Tank Inventory Information Identification/Evaluation. (3 Pages)

Tank	Inventory	Source Document	Date of Source Document	Technical Basis Evaluation
CX-71	6 Ci Pu 6,000 Ci beta	SD-DD-FL-001, p. 67 (RHO 1982)	July 1982	No - States as process knowledge.
	6 Ci TRU 6,000 beta 2,300 gal of solids (primarily limestone) and 1,500 gal of water	SD-WM-SAR-003, pp. 5-56 (RHO 1984)	March 1984	No - Restates SD-DD-FL-001 (RHO 1982) estimate.
	6 Ci alpha 6,000 Ci beta	DOE/EA-0259, p. 51 (DOE 1985)	May 1985	No - Probably restatement of SD-DD-FL-001 (RHO 1982).
	6 Ci Pu 6,000 Ci beta	WHC-SD-DD-TI-039, p. 1 (WHC 1989d)	June 1989	No - Cited from SD-DD-ES-003 (RHO 1984) with no basis provided. Probably restatement of SD-DD-FL-001 (RHO 1982).
	0.82 g Pu-239	WHC-SD-DD-ES-007, p. 7 (WHC 1989a)	September 1989	Yes - Estimate based on assumptions that Pu present in 8.8 million gal of decontaminated waste (at 1.5 nCi/L) was retained in tank, none lost to effluent.
	N/A	WHC-MR-0144 (WHC 1990b)	May 1990	Describes plans to sample tank in accordance with WHC-SD-DD-ES-007 (WHI 1989a); no inventory information provided.
	<4 nCi/g Sr-90 <2 nCi/g Cs-137 0.82 g Pu-239	WHC-SD-DD-SAD-001, pp. 5 and 22 (WHC 1990c)	September 1990	No - Based on WHC-SD-DD-ES-007 (WHC 1989a) assumption that Pu present in 8.8 million gal of decon waste (at 1.5 nCi/L) was retained in tank, none lost to effluent, similar assumptions for Sr and Cs.
	Sample data not usable.	WHC-SD-DD-TI-058, (WHC 1991b)	December 1991	Sample data reported in percentages, but not summarized or correlated to total tank estimate.
	6 Ci alpha 6,000 Ci beta	WHC-SD-EN-ES-019, p. 30 (WHC 1992e)	February 1992	No - Basis probably from SD-DD-FL-001 (RHO 1982), which was input into WIDS.
	0.04 Ci Sr 0.2 Ci Cs	WHC-EP-0560, pp. 3-6 (WHC 1992d)	December 1992	Estimates based on July 1974 sample of liquids, not sludge. Results are false low -- dismissed.

Table A-2. 241-CX-71 Tank Inventory Information Identification/Evaluation. (3 Pages)

Tank	Inventory	Source Document	Date of Source Document	Technical Basis Evaluation
CX-71	0.0988 Ci U-238 0.0496 Ci Cs-137 93 Ci Sr-90 0.002 Ci Co-60 70.0 Ci H-3 0.4579 Ci Pu-239 0.1230 Ci Pu-240	DOE/RL-92-18, Table 2-2, pp. 2T-2a (DOE-RL 1993)	May 1993	No - Source cited as WHC-SD-EN-ES-019 (WHC 1992e), but cited source (p. 30) states inventory is for associated 216-C-1 Crib. Same species of radionuclides would be expected in tank, but inventory of tank would be different -- inventory dismissed.
	pH = 6.8 16.2 microCi/gal - Sr-89, Sr-90 5.9 microCi/gal - Cs-137	WHC-SD-EN-ES-040, pp. 2-24 (WHC 1994a)	February 1994	Yes – Estimates based on liquid sample taken in 1974, decayed to 1992. Estimate low, as sludge would have higher concentration.
	6 microCi/gal - Cs-137	WHC-EP-0775, p. D-5 (WHC 1994b)	September 1994	Estimate probably based on WHC-SD-EN-ES-040 (WHC 1994a) estimate above, which is not representative of total contents of tank.
	2.56 E+03 Ci H-3 7.32 E-02 Ci Co-60 3.43.E+03 Ci Sr-90 1.82 E+00 Ci Cs-137 8.70 E-01 Ci U-238 4.40 E+00 Ci Pu-239 1.09 E+00 Ci Pu-240	BHI-01087, pp. 9 and 11 (BHI 1997b)	August 1997	5% of 6,000 Ci beta and 5% of 6 Ci alpha of estimate in WHC-SD-EN-ES-019 (WHC 1992e) assumed to remain in tank. Isotopic composition assumed to be the same as the 216-C-1 crib species. Although BHI-01087 (BHI 1997b) states the 241-CX-71 tank inventory was based on 95% removal effectiveness assumption (i.e., 95% of the inventory went to the crib, with 5% of the inventory retained in the tank), this statement is in error. The inventory stated in Table 1 of BHI-01087 (BHI 1997b) reflects 100% of the estimated 6,000 Ci beta and 6 Ci alpha remaining in the tank. This is appropriate in considering precipitation of isotopes in a caustic environment.

Table A-2. 241-CX-71 Tank Inventory Information Identification/Evaluation. (3 Pages)

Tank	Inventory	Source Document	Date of Source Document	Technical Basis Evaluation
CX-71	2.56 E+03 Ci H-3 7.32 E-02 Ci Co-60 3.43.E+03 Ci Sr-90 1.82 E+00 Ci Cs-137 8.70 E-01 Ci U-238 4.40 E+00 Ci Pu-239 1.09 E+00 Ci Pu-240	Estimated inventory for FHC		The WHC-SD-EN-ES-019 (WHC 1992e) report is founded on the RHO estimate based on process knowledge. The RHO estimate is conservative (6 Ci Pu) with respect to later estimates based on assumptions of total waste flow (WHC-SD-DD-ES-007 [WHC 1989a]) (0.82 curies Pu). The assumption of isotopic composition is the same as the 216-C-1 Crib is appropriate. The assumption that 95% of the waste flowing through the tank is in the crib, and that only 5% of total inventory remains is appropriate for large volume, dilute solutions (sink and decontamination waste flows) through a neutralizing tank. The BHI-01087 (BHI 1997b) data will be retained.

TRU = transuranic
N/A = not applicable
WIDS = Waste Information Data System
FHC = final hazard classification

Table A-3. 241-CX-72 Tank Inventory Information Identification/Evaluation. (3 Pages)

Tank	Inventory	Source Document	Date of Source Document	Technical Basis Evaluation
CX-72	3 Ci Pu 6,000 Ci beta	SD-DD-FL-001, p. 71 (RHO 1982)	July 1982	No – Stated as process knowledge.
	3 Ci TRU 6,000 Ci beta Tank and vault contain low levels of residual contamination. 20,000-gal tank and caisson annular space are empty.	SD-WM-SAR-003, pp. 5-56 (RHO 1984)	March 1984	No – Restates prior estimate from SD-DD-FL-001 (RHO 1992). 20,000-gal capacity noted in source document is in error. Tank is approximately 2,000-gal capacity.
	No inventory given.	DOE/EA-0259, p. 51 (DOE 1985)	May 1985	N/A - Document did not address inventory of 241-CX-72, probably because SD-WM-SAR-003 (RHO 1984) stated that the tank was empty.
	150 to 200 g Pu	WHC-SD-CP-TI-148, p. 6 (WHC 1989b)	June 1989	Yes - Dose rate and neutron flux measurements used to estimate TRU content.
	150 to 200 g Pu 3 Ci Pu 6,000 Ci beta	WHC-SD-DD-TI-040, pp. 11 and 20 (WHC 1989e)	June 1989	Yes - Reports both SD-DD-FL-001 (RHO 1982) historical estimates and estimate based on drywell measurements from WHC-SD-CP-TI-148 (WHC 1989b).
	150 to 200 g Pu	WHC-SD-DD-ES-008, p. 20 (WHC 1989c)	September 1989	No - Restates WHC-SD-CP-TI-148 results.
	100 g Pu 8,000 to 10,000 Ci Cs	WHC-SD-DD-TI-051, p. 11 (WHC 1990a)	March 1990	Yes - Estimated cesium and plutonium content based on WHC-SD-CP-TI-148 (WHC 1989b) measurements taken in 1989 - plutonium estimate somewhat lower.
	None given.	WHC-MR-0144 (WHC 1990b)	May 1990	N/A - Describes plans for sampling 241-CX-72 waste in 1991.
	200 g Pu 10,000 Ci Cs-137	WHC-SD-DD-SAD-001, pp. 23 and 24 (WHC 1990c)	September 1990	No - Upper-bound estimate based on WHC-SD-CP-TI-148 (WHC 1989b) and WHC-SD-DD-TI-051 (WHC 1990a).

Table A-3. 241-CX-72 Tank Inventory Information Identification/Evaluation. (3 Pages)

Tank	Inventory	Source Document	Date of Source Document	Technical Basis Evaluation
CX-72	150 to 200 g Pu 6,000 - 10,000 Ci Cs-137	WHC-SD-TI-057, p. 34 (WHC 1991a)	October 1991	No - Restates estimates of WHC-SD-DD-SAD-001 (WHC 1990c), WHC-SD-CP-TI-148 (WHC 1989b), and WHC-SD-DD-TI-051 (WHC 1990a) above.
	Maximum 200 g Pu 3 Ci alpha 6,000 Ci beta	WHC-SD-EN-ES-019, p. 32 (WHC 1992e)	February 1992	No - Restates WHC-SD-CP-TI-148 (WHC 1990a) maximum estimate for Pu, WIDS data sheet quoted for alpha/beta, which is probably a restatement of SD-DD-FL-001 (RH0 1982).
	150 to 200 g Pu 8,000 to 10,000 Ci Cs	WHC-SD-DD-TI-070, p. 10 (WHC 1992c)	July 1992	No - Restates WHC-SD-CP-TI-148 (WHC 1989b) and WHC-SD-DD-TI-051 (WHC 1990a) estimates.
	N/A	CSER 92-003 (WHC 1992a)	August 1992	N/A - Used WHC-SD-CP-TI-148 WHC (1989b) estimate of Pu.
	150 to 200 g Pu	Tank 241-CX-72 white paper, p. 10 (WHC 1993)	March 1993	No - Restated WHC-SD-CP-TI-148 (WHC 1989b) estimate of Pu.
	200 g Pu 5.33 E-7 Ci - U-238 15,000 Ci - Cs-137 2.8 E-6 Ci - Sr-90	DOE/RL-92-18, Table 2-2, p. 2T2a (DOE-RL 1993)	May 1993	No - Restates WIDS information and WHC-SD-DD-ES-008 (WHC 1989c) inventory estimates.
	3 Ci Pu 150 to 200 g Pu 6,000 Ci beta/gamma 10,000 Ci - Cs-137	WHC-SD-EN-ES-040, pp. 2-24 (WHC 1994a)	February 1994	No - Restates WHC-SD-CP-TI-148 (WHC 1989b), WHC-SD-DD-TI-051 (WHC 1990a), and SD-DD-FL-001 estimates.
	150 to 200 g Pu	Report No 94-003 (Ecology 1994)	April 1994	No - Black & Veatch safety assessment of Strontium Semiworks tank 241-CX-72 (prepared for Ecology). Used WHC-SD-DD-TI-040 (WHC 1994a) and WHC-SD-CP-TI-148 (WHC 1989b) plutonium estimates.
	0.20 kg Pu	WHC-EP-0775, p. B-6 (WHC 1994b)	September 1994	No - Probably restatement of WHC-SD-CP-TI-148 (DOE-RL 1993).

Table A-3. 241-CX-72 Tank Inventory Information Identification/Evaluation. (3 Pages)

Tank	Inventory	Source Document	Date of Source Document	Technical Basis Evaluation
CX-72	2.80 E-06 Ci Sr-90 1.50 E+05 Ci Cs-137 5.33 E-07 Ci U-238 1.23 E+01 Ci Pu-239	BHI-01087, pp. 9 and 11 (BHI 1997b)	August 1997	No - Inventory taken from DOE/RL-92-18, identified as suspect and needs further investigation (DOE-RL 1993).
	6.0 E+03 Ci Sr-90 1.0 E+05 Ci Cs-137 200 g Pu	Estimated inventory for FHC		6,000 Ci of beta (as cited from RHO) conservatively assumed to be all Sr-90. 10,000 Ci of Cs (upper-bound estimate from WHC-SD-DD-TI-051 [WHC 1990a]) conservatively assumed (in addition to beta). 200 g Pu assumed based on WHC-SD-CP-TI-148 (WHC 1989b) upper-bound estimate.

N/A = not applicable
Ecology = Washington State Department of Ecology
FHC = final hazard classification
RHO = Rockwell Hnaford Operations

Table A-4. 241-CX Tank System Hazard Identification. (9 Pages)

Hazard Type	Location	Form	Quantity	Remarks	References
Radioactive material	241-CX-70	Underground waste handling tank contains mixed fission products as internal surface contamination/waste residue.	Tank confirmed empty and clean in 1991, but traces of residue remain. See Table A-1 for estimated radionuclide inventory.	Material confined in underground stainless-steel tank inside concrete shell. Tank risers have been blanked-off.	WHC-SD-DD-TI-071, p. 41 (WHC 1992b)
	241-CX-71	Tank contains mixed fission products in sludge and limestone aggregate.	Estimated 2,300 gal of solids (primarily limestone used for waste neutralization) and 1,500 gal of water remaining when grouted. See Table A-2 for estimated radionuclide inventory.	Material is confined in underground tank reported to be stainless steel. Drawings of the tank do not exist. Tank void and risers filled with grout.	SD-WM-SAR-003, pp. 5-56 (RHO 1984)
	241-CX-72	Tank contains mixed fission products in sludge.	Estimated 2.5 m^3 of dry sludge (10- to 11-ft layer) at bottom of tank, with approximately 6 m^3 of grout on top. See Table A-3 for estimated radionuclide inventory.	Material confined in underground stainless steel tank inside carbon steel caisson. Tank void and risers filled with approximately 24 ft of grout.	WHC-SD-DD-SAD-001, p. 5 (WHC 1990c)
	241-CX-72 vault	Vault likely to contain residual radioactive materials.	Unknown, but not likely to be significant, as waste streams went direct to tank.	Vault formerly used for waste concentrating support operations. Waste streams bypassed vault.	Drawings H-2-71672, SK-2-4657, and SK-2-56955
	241-CX-72 greenhouse	Minor amounts of contaminants may be present in the RMA.	Not quantified, but not likely to be significant.	Two RMAs inside greenhouse for stored equipment. General area is all URMA.	Walkdown by analysts

Table A-4. 241-CX Tank System Hazard Identification. (9 Pages)

Hazard Type	Location	Form	Quantity	Remarks	References
Direct radiation	241-CX-70 241-CX-71 241-CX-72 241-CX-72 vault 241-CX-72 greenhouse	Mixed fission products.	Significant dose would be encountered in waste products, but tanks are buried. Insignificant radiation from buried tanks or vault at grade level or inside greenhouse. Insignificant from two RMAs inside greenhouse.	All three tanks and vault are underground, shielding provided by dirt. Area is not posted as radiation area.	Walkdown
Toxic material	241-CX-70	Chemical trace residues.	Residues unlikely to contain significant amounts of toxic materials. Assessed as "negligible."	Tank has been confirmed empty.	DOE/RL-92-18, Tables 2-3 and 2-6 (DOE-RL 1993).
	241-CX-71	Chemical residues in sludge/aggregate.	Quantity unknown, but not likely to be significant; assessed as "minor."	Acidic solutions were neutralized with limestone in tank prior to discharge to 216-C-1 Crib.	DOE/RL-92-18, Tables 2-3 and 2-6 (DOE-RL 1993).
	241-CX-72	Chemical residues in sludge.	Quantity unknown. Sludge likely to contain toxic materials - assumed to be minor hazard in comparison to radiological source term.	Wastes were concentrated in tank, volatiles have likely evaporated.	DOE/RL-92-18, Tables 2-3 and 2-6 (DOE-RL 1993).
Carcinogens	241-CX-70	Trace residues.	Residues unlikely to contain significant amounts of carcinogens; assessed as "negligible."	None.	DOE/RL-92-18, Table 2-6, pp. 2T-6a and 6b (DOE-RL 1993)
	241-CX-71	Residues in sludge.	Quantity unknown, but not likely to be significant; assessed as "minor."	None.	DOE/RL-92-18, Table 2-6, pp. 2T-6a and 6b (DOE-RL 1993)
	241-CX-72	Residues in sludge.	Quantity unknown. Sludge likely to contain carcinogens. Assumed to be minor hazard in comparison to radiological source term.	None.	DOE/RL-92-18, Table 2-6, pp. 2T-6a and 6b (DOE-RL 1993)

Table A-4. 241-CX Tank System Hazard Identification. (9 Pages)

Hazard Type	Location	Form	Quantity	Remarks	References
Biohazard	241-CX-70 241-CX-71 241-CX-72 241-CX-72 vault 241-CX-72 greenhouse	Rodents, insects, and snakes.	None anticipated in underground tanks or vault. Greater biohazard activity expected for greenhouse.	Because there is very little human activity in and around these facilities, increased rodent, insect, and snake activity can be expected.	Walkdown by analysts
Asphyxiant	241-CX-70 241-CX-71 241-CX-72 241-CX-72 vault 241-CX-72 greenhouse	None identified.	None identified.	None.	Walkdown by analysts
Flammable material	241-CX-70	Organic material.	Trace amounts of organics may be present in residuals.	Underground tank is empty, and risers are capped.	WHC-EP-0775, p. A-23 (WHC 1994b) DOE/RL-92-18, Table 2-6, pp. 2T-6a and 6b (DOE-RL 1993)
	241-CX-71	Organic material.	TOC estimated at 8.98% for all Strontium Semiworks streams.	Underground tank void and risers filled with grout. Volatiles, if present, have likely evaporated. No known heat source sufficient to cause volitization of other organics that may be present in tank.	WHC-EP-0775, p. A-23 (WHC 1994b)

Table A-4. 241-CX Tank System Hazard Identification. (9 Pages)

Hazard Type	Location	Form	Quantity	Remarks	References
Flammable material	241-CX-72 241-CX-72 vault 241-CX-72 greenhouse	Organic material.	TOC estimated at 8.98% for all Strontium Semiworks streams. No organic materials identified in vault or greenhouse.	Volatiles, if present, have likely evaporated. No known heat source sufficient to cause volitization of organics that may be present in tank. Underground tank void, tank risers, and vault filled with grout. Greenhouse not used to store or process flammable materials.	WHC-EP-0775, p. A-23 (WHC 1994b)
Reactive material (organic and inorganic)	241-CX-70	Trace residue may contain organic salts. Trace residues not expected to contain ferrocyanide (inorganic).	Trace residues not likely to contain significant amounts of organic salts.	Reaction from organic salts not probable. Tank is empty and there is no known heat source (either external or from chemical reactions) that could cause organic salt reaction. Tank was not in FeCN process path.	WHC-EP-0775, p. A-23 (WHC 1994b) DOE/RL-92-18, Table 2-6 (DOE-RL 1993)
	241-CX-71	Sludge contains organic materials, organic salts likely to exist. Sludge not expected to contain ferrocyanide (inorganic).	TOC estimated at 8.98%.	Reaction from organic salts is not probable. There is no known heat source (either external or from chemical reactions) that could cause organic salt reaction. Tank was not in FeCN process path.	WHC-EP-0775, p. A-23 (WHC 1994b) DOE/RL-92-18, Table 2-6 (DOE-RL 1993)

Table A-4. 241-CX Tank System Hazard Identification. (9 Pages)

Hazard Type	Location	Form	Quantity	Remarks	References
Reactive material (organuc and inorganic)	241-CX-72 241-CX-72 vault 241-CX-72 greenhouse	Tank sludge contains organic materials, organic salts possible. Sludge not expected to contain ferrocyanide (inorganic). No reactive materials identified in vault or greenhouse.	TOC estimated at 8.98%.	WHC-EP-0775 provided no basis for ranking because no CL temperature was calculated. However, organic salt reactions require presence of organic salts and high temperatures. There is no known heat source (either external or from chemical reactions) that could cause organic salt reaction. WHC (1989b) axial temperature profile measurements of the tank range from 60°F to 72°F. In accordance with WHC (1994b) heat generation criteria, the tank is judged to generate inadequate heat (<386°F) to initiate organic salt reaction. Tank was not in FeCN process path.	WHC-EP-0775, p. A-23 (WHC 1994b) WHC-SD-CP-TI-148, p. 14 (WHC 1989b) DOE/RL-92-18, Table 2-6 (DOE-RL 1993)
Explosive material	241-CX-70	Hydrogen generation from radiolysis or chemical reaction.	Negligible.	Hydrogen generation may be occurring in minute quantities, but tank is not "sealed" environment. Tank is empty, except for trace residues.	WHC-EP-0775, pp. 2-3 and A-6 (WHC 1994b) Engineering judgment

Table A-4. 241-CX Tank System Hazard Identification. (9 Pages)

Hazard Type	Location	Form	Quantity	Remarks	References
	241-CX-71	Hydrogen generation from radiolysis or chemical reaction.	Negligible.	WHC-EP-0775 estimated it would take 102 years to achieve 1% H_2 generation. Tank void has been filled with grout.	WHC-EP-0775, p. A-6 (WHC 1994b)
Explosive material	241-CX-72 241-CX-72 vault 241-CX-72 greenhouse	Hydrogen generation from radiolysis or chemical reaction.	Significant H_2 buildup in tank is not probable. Conditions do not exist to accumulate H_2 in tanks or structures that are not air tight.	No basis was provided for ranking 241-CX-72 as "low" in WHC-EP-0775. 241-CX-72 erroneously identified as having 72% void space. 241-CX-72 has been filled with grout and sludge under grout is dry. Water is not present in sludge for radiolytic decomposition, generation and buildup of H_2. Introduction of external water source into tank (for radiolytic decomposition) would require breach of caisson, breach of tank, and presence of water around tank. Tank is above water table and normal precipitation is insufficient to wet soil around tank.	WHC-EP-0775, p. A-6 (WHC 1994b) Engineering judgment

Table A-4. 241-CX Tank System Hazard Identification. (9 Pages)

Hazard Type	Location	Form	Quantity	Remarks	References
Explosive material	241-CX-72 241-CX-72 vault 241-CX-72 greenhouse			H_2 generation and buildup as result of chemical reactions occurring in the dry sludge is unlikely. Even if this did occur, actual void space in tank is probably on order of 2 or 3% (grout shrinkage), and there wouldn't be enough voids to accumulate enough H_2 to be significant. Tank/risers are not air-tight.	
Electrical energy	241-CX-70	None.	None.	No electrical supply to tank.	Walkdown by analysts
	241-CX-71	None.	None.	No electrical supply to tank.	Walkdown by analysts
	241-CX-72 241-CX-72 vault 241-CX-72 greenhouse	None in underground tank or vault. 440-VOH supply for greenhouse.	440-VOH supply to greenhouse (formerly for tank-drilling operations), now only for incidental loads.	No electrical supply to tank or vault.	Walkdown by analysts
Thermal energy	241-CX-70 241-CX-71 241-CX-72 241-CX-72 vault 241-CX-72 greenhouse	Heat generation from chemical reaction.	Negligible for empty 241-CX-70 tank. Negligible for 241-CX-71 tank based on estimate of 55°F centerline temperature. Minor for 241-CX-72 based on drywell periphery measurements.	Axial temperature profile measurements of the 241-CX-72 tank range from 60°F to 72°F, indicating some heat generation, not significant.	WHC-EP-0775, p. A-17 (WHC 1994b) WHC-SD-CP-TI-148, p. 14 (WHC 1989b)

Table A-4. 241-CX Tank System Hazard Identification. (9 Pages)

Hazard Type	Location	Form	Quantity	Remarks	References
Kinetic energy/ high pressure	241-CX-70 241-CX-71 241-CX-72 241-CX-72 vault 241-CX-72 greenhouse	None identified.	None identified.	No rotating equipment, pressurized gases.	Walkdown by analysts
Criticality	241-CX-70	Fissionable materials.	Am-241 = 3.41 E-02 Ci Pu-239 = 1.16 E-01 Ci	Total estimated inventory of fissionable materials less than subcritical mass limits.	0200E-CE-N0007, p. 3 (BHI 1997a)
	241-CX-71	Fissionable materials.	Pu-239 = 4.40 E+00 Ci Pu-240 = 1.09 E+00 Ci	Total estimated inventory of fissionable materials less than subcritical mass limits.	0200E-CE-N0007, p. 4 (BHI 1997a)
	241-CX-72 241-CX-72 vault 241-CX-72 greenhouse	Fissionable materials.	Pu-239 = 1.23 E+01 Ci	Total estimated inventory of fissionable materials less than subcritical mass limits.	0200E-CE-N0007, p. 5 (BHI 1997a)
Earthquake	241-CX-70 241-CX-71 241-CX-72 241-CX-72 vault 241-CX-72 greenhouse	Radioactive materials, direct radiation, toxics.	See last cell of Tables A-1, A-2, and A-3 for inventory estimates of three tanks.	Ability to resist seismic events unknown, although may have been constructed to standards of the day, assumed to fail.	Process knowledge
Flood	241-CX-70 241-CX-71 241-CX-72 241-CX-72 vault 241-CX-72 greenhouse	Radioactive materials, direct radiation, toxics.	See last cell of Tables A-1, A-2, and A-3 for inventory estimates of three tanks.	Location is in the 200 East Area Plateau above all known flood and run-off plains.	Engineering judgment

Table A-4. 241-CX Tank System Hazard Identification. (9 Pages)

Hazard Type	Location	Form	Quantity	Remarks	References
Ash/snow	241-CX-70 241-CX-71 241-CX-72 241-CX-72 vault 241-CX-72 greenhouse	Radioactive materials, direct radiation, toxics.	See last cell of Tables A-1, A-2, and A-3 for inventory estimates of three tanks.	Ash or snowfall would have no impact on underground tanks or vault. Ability of greenhouse to resist current design criteria for ash/snow loads unknown. Although may have been constructed to standards of the day, assumed to fail.	Process knowledge
Lightning	241-CX-70 241-CX-71 241-CX-72 241-CX-72 vault 241-CX-72 greenhouse	Radioactive materials, direct radiation, toxics.	See last cell of Tables A-1, A-2, and A-3 for inventory estimates of three tanks.	Lightning strike of underground tank that would lead to release of material is not probable.	Engineering judgment
High winds	241-CX-70 241-CX-71 241-CX-72 241-CX-72 vault 241-CX-72 greenhouse	Radioactive materials, direct radiation, toxics.	See last cell of Tables A-1, A-2, and A-3 for inventory estimates of three tanks.	High winds would have no effect on underground tanks or vault. Ability of greenhouse to resist high winds to current design criteria is unknown. Greenhouse assumed to fail. Tornado is not credible event for Hanford Site.	Engineering judgment

RMA = radioactive material area
URMA = underground radioactive material area
TOC = total organic carbon

Table A-5. 241-CX Tank System Preliminary Hazard Analysis. (7 Pages)

Item	Potential Event	Location	Hazard Type	Event and Possible Causes	SSCs	Admin	C	L
1	Seismic event	241-CX-70	Radioactive, toxic materials, kinetic energy.	Ability of tank to resist seismic event unknown; assumed that tank, risers, or piping is compromised opening release path to soil column or air.	Preventive - None. Mitigative - None.	Preventive - None. Mitigative - Emergency management program for post-seismic response.	III-3	D
2	Seismic event	241-CX-71	Radioactive, toxic materials, kinetic energy.	Ability of tank to resist seismic event unknown; assumed that tank, risers, or piping is compromised opening release path to soil column or air.	Preventive - None. Mitigative - None.	Preventive - None. Mitigative - Emergency management program for post-seismic response.	III-3	D
3	Seismic event	241-CX-72 241-CX-72 vault 241-CX-72 greenhouse	Radioactive, toxic materials, kinetic energy.	Ability of tank, vault, or greenhouse to resist seismic event unknown; assumed that tank, caisson, risers, piping, vault, or greenhouse is damaged, opening release path to soil column or air.	Preventive - None. Mitigative - None.	Preventive - None. Mitigative - Emergency management program for post-seismic response.	III-3	D
4	High wind	241-CX-72 greenhouse	Radioactive, toxic materials, kinetic energy.	Ability of greenhouse to withstand high wind is unknown; assumed that greenhouse collapses, resulting in minor spread of contamination from RMAs. Spread of contamination from under access lid to 241-CX-72 not likely.	Preventive - None. Mitigative - None.	Preventive - None. Mitigative - Emergency management program for post-event damage to greenhouse.	III-3	D

Table A-5. 241-CX Tank System Preliminary Hazard Analysis. (7 Pages)

Item	Potential Event	Location	Hazard Type	Event and Possible Causes	SSCs	Admin	C	L
5	Ash/snow loading	241-CX-72 greenhouse	Radioactive, toxic materials, kinetic energy.	Ability of greenhouse to withstand ash/snow loading is unknown; assumed that greenhouse collapses, resulting in minor spread of contamination from RMAs. Spread of contamination from under access lid to 241-CX-72 caisson, risers is not likely.	Preventive - None. Mitigative - None.	Preventive - None. Mitigative - Emergency response for greenhouse post-event recovery.	III-3	N/A
6	Loss of electric	241-CX-72 greenhouse	Radioactive material, toxic material.	440 volts provided to greenhouse for normal lighting and house loads. Loss of electric power has no effect on tank, vault, or greenhouse.	N/A	N/A	N/A	N/A
7	Aircraft	241-CX-70 241-CX-71 241-CX-72 CX-72 vault CX-72 greenhouse	Radioactive, toxic materials, kinetic energy.	Probability of aircraft hitting small target, such as underground tank site or greenhouse, is sufficiently small that hazard evaluation is not warranted.	N/A	N/A	N/A	N/A
8	Vehicle impact	241-CX-70	Radioactive, toxic materials, kinetic energy.	Vehicle traverses site and damages risers as result of human error or vehicle failure, which opens release path to air or soil column.	Preventive - None. Mitigative - None.	Preventive - Site demarcation/posting. Mitigative - Repairs.	III-3	D
9	Vehicle impact	241-CX-71	Radioactive, toxic materials, kinetic energy.	Vehicle traverses site and damages risers as result of human error or vehicle failure, which opens release path to air or soil column.	Preventive - None. Mitigative - None.	Preventive - Site demarcation/posting. Mitigative - Repairs.	III-3	D

Table A-5. 241-CX Tank System Preliminary Hazard Analysis. (7 Pages)

Item	Potential Event	Location	Hazard Type	Event and Possible Causes	SSCs	Admin	C	L
10	Vehicle impact	241-CX-72 CX-72 vault CX-72 greenhouse	Radioactive, toxic materials, kinetic energy.	Vehicle traverses site and damages risers as result of human error or vehicle failure, which opens release path to air or soil column.	Preventive - None. Mitigative - None.	Preventive - Site demarcation/posting. Mitigative - Repairs.	III-3	D
11	Water intrusion	241-CX-70	Radioactive material, toxic material.	Water intrusion through risers/cracks in tank leads to spread of contamination.	Preventive - None. Mitigative - None.	Preventive - Weather enclosures over access pit and riser periodically inspected. Mitigative - Corrective action to remove water.	III-3	D
12	Water intrusion	241-CX-71	Radioactive material, toxic material.	Water intrusion through grouted risers or cracks in tank leads to spread of contamination.	Preventive - None. Mitigative - None.	Preventive - None. Mitigative - None.	III-3	D
13	Water intrusion	241-CX-72 CX-72 vault CX-72 greenhouse	Radioactive material, toxic material.	Water intrusion though grouted risers or cracks in tank leads to spread of contamination.	Preventive - None. Mitigative - None.	Preventive - None. Mitigative - None.	III-3	D
14	Fire	241-CX-70	Radioactive material, toxic material.	Fire is not probable, as underground tank contains no fuel or ignition source.	N/A	N/A	N/A	N/A
15	Fire	241-CX-71	Radioactive material, toxic material.	Fire is not probable, as underground tank contains residual liquids, sludge, and limestone aggregate under grout cap with grouted risers and has no other fuel or ignition source.	N/A	N/A	N/A	N/A

Table A-5. 241-CX Tank System Preliminary Hazard Analysis. (7 Pages)

Item	Potential Event	Location	Hazard Type	Event and Possible Causes	SSCs	Admin	C	L
16	Fire	241-CX-72 CX-72 vault CX-72 greenhouse	Radioactive material, toxic material.	Fire is not probable in underground tank or vault that have been grouted and contain no known ignition source Greenhouse could burn, but not probably that fire would lead to release of material from underground tank.	N/A for tank. N/A for vault. Preventive for greenhouse - None. Mitigative for greenhouse - None.	N/A for tank. N/A for vault. Preventive for greenhouse - good housekeeping. Mitigative for greenhouse - None.	N/A N/A III-3	N/A N/A D
17	Heavy loads/drop	241-CX-70	Radioactive material, toxic material, kinetic energy.	Heavy object dropped onto risers causing structural failure and creates release path to soil column or air.	Preventive - None. Mitigative - None.	Preventive - Work practices. Mitigative - Post-event repairs.	III-3	D
18	Heavy loads/drop	241-CX-71	Radioactive material, toxic material, kinetic energy.	Heavy object dropped onto risers causing structural failure and creating release path to soil column or air.	Preventive - None. Mitigative - None.	Preventive - Work practices. Mitigative - Post-event repairs.	III-3	D
19	Heavy loads/drop	241-CX-72 CX-72 vault CX-72 greenhouse	Radioactive material, toxic material, kinetic energy.	Heavy object dropped onto risers causing structural failure and creating release path to soil column or air. Underground vault has been grouted. Tank drilling not addressed in PHA. Heavy loads not likely to be moved in greenhouse.	Preventive - None. Mitigative - None.	Preventive - Work practices. Mitigative - Post-event repairs.	III-3	D

Table A-5. 241-CX Tank System Preliminary Hazard Analysis. (7 Pages)

Item	Potential Event	Location	Hazard Type	Event and Possible Causes	SSCs	Admin	C	L
20	Loss of ventilation	241-CX-70 241-CX-71 241-CX-72 CX-72 vault CX-72 greenhouse	Radioactive material, toxic material.	N/A - No active ventilation system for tanks, vault, or greenhouse.	N/A	N/A	N/A	N/A
21	Container spill	241-CX-70 241-CX-71 241-CX-72 CX-72 vault CX-72 greenhouse	Toxic material.	Incidental chemical container fails or is spilled.	Preventive - None. Mitigative - None.	Preventive - Good housekeeping. Mitigative - Spill response.	III-3	D
22	Container explosion	241-CX-70 241-CX-71 241-CX-72 CX-72 vault CX-72 greenhouse	Toxic material, flammable material.	Incidental chemical container explodes.	Preventive - None. Mitigative - None.	Preventive - None. Mitigative - None.	III-3	E
23	Leak potential	241-CX-70 241-CX-71 241-CX-72 241-CX-72 vault 241-CX-72 greenhouse	Radioactive, toxic material.	Tank corrodes, opening path to soil column. Leaks resulting from corrosion are not likely. 241-CX-70 and 241-CX-72 are stainless-steel tanks. Although drawings of 241-CX-71 do not exist, it is recorded that the tank is stainless steel.	Preventive - None. Mitigative - None.	Preventive - None. Mitigative - None.	III-3	D

Table A-5. 241-CX Tank System Preliminary Hazard Analysis. (7 Pages)

Item	Potential Event	Location	Hazard Type	Event and Possible Causes	SSCs	Admin	C	L
23	Leak potential			Corrosion potential is considered low for all tanks, although conditions conducive to corrosion (i.e., thermal cycling, fluorides, chlorides, and aqueous environment) previously existed in 241-CX-72. Leak potential for 241-CX-70 is low (tank is empty). 241-CX-72 contains dry sludge with grout on top. An aqueous environment (which is needed for stainless-steel corrosion) is no longer present in 241-CX-72. In the unlikely event that tank 241-CX-70 or 241-CX-72 integrity is compromised, there is no readily available driver (e.g., groundwater, precipitation, etc.) that would facilitate transport of tank contaminants to the soil column. It is possible that 241-CX-71 could leak; however, such leakage would be no more contaminated than the previous operating discharges from the tank to the 216-C-1 Crib. If 241-CX-71 did leak, the environmental insult would effectively be an enlargement of the 216-C-1 Crib.				

Table A-5. 241-CX Tank System Preliminary Hazard Analysis. (7 Pages)

Item	Potential Event	Location	Hazard Type	Event and Possible Causes	SSCs	Admin	C	L
24	Spread of external surface contaminants	241-CX-70 241-CX-71 241-CX-72 CX-72 vault CX-72 greenhouse	Radioactive material.	Surface contamination is spread from designated areas. Possible causes (wind, biological agents).	Preventive - None. Mitigative - None.	Preventive - Routine surveys for spread of contamination. Mitigative - Work practices.	III-3	D

RMA = radioactive material area
N/A = not applicable
PHA = preliminary hazard analysis
SSCs = systems, structures, and components

APPENDIX B

241-CX TANK SYSTEM FINAL HAZARD CLASSIFICATION

CALCULATION COVER SHEET

Project Title ERC, SM&T Project **Job No.** 22192
Area 200 East, Hanford Site
Discipline Nuclear Safety ***Calc. No.** 0200E-CA-N0005, Rev. 0
Subject Final Hazard Classification for 241-CX Tank System
Computer Program NA **Program No.** NA

Committed Calculation ☑ **Preliminary** ☐ **Superseded** ☐

Rev.	Sheet Numbers	Originator	Checker	Reviewer	Approval	Date
0	Pages 5 of 5 ~~6 of 6~~ max Plus Cover	Noel R. Kerr YRK 12/[illegible]/98	S.P. Kretschmer [illegible] 1/6/98 [illegible]	NA	R.G. Egge [illegible]	1/7/99

SUMMARY OF REVISION

0	Provides correction to Appendix B of BHI-01173, "Auditable Safety Analysis for Surveillance and Maitenance of the 241-CX Tank System". Defines FHC for Tank System.

Scanned:	Rev.	Date	Bar Code No.	Rev.	Date	Bar Code No.

*Obtain Calc. No. from DIS.

BHI-DE-01, EDPI-4.37-01, DE01437.03 November 1996

CALCULATION SHEET

Originator N.R. Kerr NRK Date 12/28/98 Calc. No. 0200E-CA-N0005, Rev. 0
Project ERC, S/M&T Job No. 22192 Checker SPK Date 1/6/99
Subject Final Hazard Classification for 241-CX Tank System

PURPOSE: Provided in the following is the Final Hazard Classification (FHC) for the 241-CX-70, -71 and –72 Tanks. This calculation replaces the original Appendix B, *241-CX Tank System Final Hazard Classification* of BHI-01173, the *Auditable Safety Analysis for Surveillance and Maintenance of the 241-CX Tank System.* The change corrects the application of tank waste partition factors PFs for determination of the Material at Risk.

BACKGROUND: The 241-CX tank system consists of three independent, inactive underground storage tanks (241-CX-70, -71 and –72) and a vault associated with the 241-CX-72 tank. The tank system was built in 1949 in support of operations at the Hot Semiworks (a.k.a., Strontium Semiworks Facility).

CX-70: The tank has an approximate capacity of 30,000-gallon (113,600 liters). Dimensions of this reinforced concrete and stainless steel lined tank is 20' (610 cm) diameter by 15' (457 cm) high. The tank is approximately 11 feet (335 cm) below grade. The tank was confirmed empty 1992. Based on 95% waste removal, the PHC concluded a worst case inventory of 1,500 gallons (5,678 liters) with an activity defined in the following.

ISOTOPE	ACTIVITY (Ci)
^{90}Sr	2.87E+02
^{137}Cs	1.34E+01
^{241}Am	3.41E-02
^{239}Pu	1.16E-01

CX-71: This stainless steel, neutralizing tank has the approximately capacity of 3,800 gallons (14,385 liters). Dimensions are documented as 9' (274 cm) in diameter and 9' high. The tank is approximately 3.5' below grade and the tank risers are grouted and capped. Residual limestone and waste sludge is capped with grout which, was installed in 1986. Approximately 2.35' (72 cm) of residual sludge and 4' (122 cm) of limestone is documented (see Figure 2-2 of BHI-01173). In SD-WM-SAR-003, page 5-56 (see RHO 1984 reference in Table A-2, page A-10 of BHI-01173) the estimated liquid content is 1,500 gallons (5678 liters).

ISOTOPE	ACTIVITY
^{3}H	2.56E+03
^{60}Co	7.32E-02
^{90}Sr	3.43E+03
^{137}Cs	1.82E+00
^{238}U	8.70E-01
^{239}Pu	4.40E+00
^{240}Pu	1.09E+00

Page 1 of 5

CALCULATION SHEET

Originator N.R. Kerr NRK Date 12/28/98 Calc. No. 0200E-CA-N0005, Rev. 0
Project ERC, S/M&T Job No. 22192 Checker SPK Date 1/6/99
Subject Final Hazard Classification for 241-CX Tank System

CX-72: This stainless steel, experimental waste concentration tank has an approximate capacity of 2,000 gallons (7,571 liters). Tank diameter is 40" (102 cm) with a height of 35.75' (1,090 cm). Grade level is approximately 14' (427 cm) above the tank. In 1956 the tank was grouted. An evaluation (WHC-SD-CP-TI-148, WHC 1989b of BHI-01173) concluded that the sediment layer is approximately 11' (335 cm) deep. BHI-01018, *Environmental Restoration Contract (ERC) Management Plan for Inactive Miscellaneous Underground Storage Tanks (IMUST)*, defines the volume of sludge at 650 gallons (2461 liters).

ISOTOPE	ACTIVITY (Ci)
^{90}Sr	2.80E-06
^{137}Cs	1.50E+05
^{238}U	5.33E-07
^{239}Pu	1.23E+01

Hazard analysis of the 241-CX tank system is documented in Appendix A of BHI-01173. Minor releases to the environment where found to bound the worst case consequences. Two types of potential releases are documented, liquid releases and vapor release. Between the two potential releases the potential vapor release was identified as having the most significant exposure potential during the surveillance and maintenance period. This calculation provides a bounding estimate of the Material at Risk in the vapor space of the tanks for determination of FHC for the 241-CX tank system.

REQUIREMENTS: The Office of the Assistant Manager for Environmental Restoration (AME) approved the Detailed Work Plans (DWP) for the Fiscal Year 1998 (FY98). The DWP required the preparation of a safety analysis and FHC.

The Engineering Design Project Instruction (EDPI) 4.28-01, *Project Hazard Classification*, found in BHI Manual BHI-DE-01, *Design Manual*, implements the requirements for hazard classification as defined in DOE-STD-1027-92, *Hazard Categorization and Accident Analysis Techniques for Compliance with DOE Order 5480.23, Nuclear Safety Analysis Reports*.

BASIS AND ASSUMPTIONS: During the hazard evaluation workshop and preparation of the safety analyses for the CX-Tank System, staff of the AME recommended application of waste tank partition factors (PFs) for purposes of FHC. It was the opinion of the AME's staff and BHI that the worst case volume of tank vapor provides the bounding Material at Risk for FHC. Hanford waste tank data provides a basis to determine the concentrations of radioactivity in the vapor space of underground storage tanks.

RHO-RE-SA-216, *Characterization of Airborne Radionuclide Particulate in Ventilated Liquid Tanks*, June 1987, provides the basis for PFs. Tank vapor of nine double-shell

Page 2 of 5

CALCULATION SHEET
Originator N.R. Kerr NRK Date 12/28/98 Calc. No. 0200E-CA-N0005, Rev. 0
Project ERC, S/M&T Job No. 22192 Checker SPK Date 1/6/99
Subject Final Hazard Classification for 241-CX Tank System

underground tanks (DSTs) was sampled to characterize aerosols and particulate. Six of the tanks were static in nature. The other tanks had air lift circulators or active transfer of waste to cause elevated aerosol or particulate concentration. Data of the six static tanks provides a basis to determine the potential of the 241-CX tank system because they are static.

Comparisons of the waste concentrations in tank vapor space and liquid waste concentrations were used to derive PFs. Comparisons of mostly Cesium-134, Cesium-137 and Ruthinum/Rubidium-106 provided the basis for most of the PFs. Cesium-137 is the isotope with application to the CX tank system.

The lowest PFs recorded for Cesium-137 is 4.23E-14. The highest recorded PF is 6.91E-11. Additionally, one sample provides an indication of the PF for Strotium-90, 3.45E-11. Since the data is limited and because it is unclear as to the effect of other process variables (i.e., waste temperature, waste concentration, air velocity and air pressure) statistical significance of the data is not possible. However, it is reasonable to assume the high end of the PFs for all metals. Since Cesium-137 and Strontium-90 are representative components of the 241-CX tank system and because the data indicates Cesium and Strontium as the highest PFs, a PF of 7.0E-11 is used in the calculation.

It is noted for clarity that tritium is documented as a radiological constituent in 241-CX-71. Tritium behavior requires different consideration. Tritium that is derived from the Hanford canyon buildings and the associated waste tank system is in the form of tritiated water. Under accident conditions the tritium remains in this form as it travels from vapor space to the environment. For release purposes it is assumed that the amount of tritium in the vapor space is equal to the mass of water vapor present at the concentration of the parent liquid waste. No PF is applicable because the vapor molecule is of the same structure and the liquid molecule.

SOLUTION STATEMENT: The DOE -STD-1027-92 defines Category 2 and Category 3 threshold quantities that are used for defining nuclear facility hazard classifications. Hazard classification thresholds are based on threshold quantities that could result in hypothetical dose consequence to public (Category 2) and the worker (Category 3). Both threshold quantities are based dispersion models that use average meteorology assumptions (24 hours). The airborne release of a static tank vapor space would be from an open tank riser under ambient conditions. For purposes of hazard classification the volumetric release assumed is of the entire tank vapor and extends thoughout the day (24 hours).

Tank waste PF's are used to determine the bounding inventory or Material at Risk. Material at Risk is calculated by multiplying the tank waste concentrations by the PF and by the estimated vapor space. To determine the FHC the Material at Risk is compared to the threshold quantities of DOE-STD-1027-92.

CALCULATION SHEET

Originator N.R. Kerr NRK Date 12/28/98 Calc. No. 0200E-CA-N0005, Rev. 0
Project ERC, S/M&T Job No. 22192 Checker SPK Date 1/6/99
Subject Final Hazard Classification for 241-CX Tank System

241-CX-70: If the tank was cleaned where 95% of the waste was removed there can be no more then (113,600 X 5%) 5,678 liters of liquid and sludge in the tank. Waste concentration can be determined by dividing the isotopic activity by the estimated waste volume.

Waste Concentration in 241-CX-70

ISOTOPE	ACTIVITY (Ci)	WASTE CONCENTRATION (Ci/l)
^{90}Sr	2.87E+02	5.05E-02
^{137}Cs	1.34E+01	2.36E-03
^{241}Am	3.41E-02	6.01E-06
^{239}Pu	1.16E-01	2.04E-05

To determine the material at risk the waste concentrations are multiplied by the PF (7.0E-11) and the available tank vapor space (113,600 * 95% = 107,920 liters).

Material at Risk in 241-CX-70

ISOTOPE	WASTE CONCENTRATION (Ci/l)	MATERIAL AT RISK (Ci)
^{90}Sr	5.05E-02	3.81E-07
^{137}Cs	2.36E-03	1.78E-08
^{241}Am	6.01E-06	4.54E-11
^{239}Pu	2.04E-05	1.54E-10

Hazard Category Comparison for 241-CX-70

ISOTOPE	MATERIAL AT RISK (Ci)	Cat. 2 TQs (Ci)	Fraction of Cat 2 TQs	Cat. 3 TQs (Ci)	Fraction of Cat 3 TQs
^{90}Sr	3.81E-07	2.20E+04	1.73E-11	1.60E+01	2.38E-08
^{137}Cs	1.78E-08	8.90E+04	2.00E-13	6.00E+01	2.97E-10
^{241}Am	4.54E-11	5.50E+01	8.25E-13	5.20E-01	8.73E-11
^{239}Pu	1.54E-10	5.60E+01	2.75E-12	5.20E-01	2.96E-10
		Sum of Fractions	**2.11E-11**		**2.45E-08**

241-CX-71 and 241-CX-72: Both the independent and smaller volume tanks have grout placed in the vapor space of each tank. Consequently, the maximum credible tank vapor that remains in these tanks is insignificant when compared to the 241-CX-70. Therefore, the calculation for the 241-CX-70 tank is bounding for concluding FHC for the entire 241-CX tank system.

CALCULATION SHEET

Originator N.R. Kerr NRK Date 12/28/98 Calc. No. 0200E-CA-N0005, Rev. 0
Project ERC, S/M&T Job No. 22192 Checker SPK Date 1/6/99
Subject Final Hazard Classification for 241-CX Tank System

CONCLUSIONS: For the purposes of FHC, tank 241-CX-70 represents the worst case segment of the 241-CX tank system. The estimated quantity of tank waste in CX-70 is conservative because the tank was cleaned and emptied. Although no data confirms the removal efficiency, photographs indicate no residual inventory (photo Nos. 92010659-CN 3, -CN 11, -CN 28 and -CN 38). Other conditions that provide a conservative determination includes:

- The cleaning activity would most likely have resulted in dilution to any residual tank contents.
- There is no active ventilation system to contribute to the tank vapor concentrations.
- The residual waste is likely to be of low (negligible) heat content, which further makes PFs a conservative application.

The comparison of worst case Material at Risk (vapor space of the 241-CX-70 tank) with the threshold quantities of DOE-STD-1027-92 concludes that the FHC is RADIOLOGICAL. Because tank 241-CX-70 represents the worst case segment of the 241-CX tank system the facility FHC is RADIOLOGICAL.

Page 5 of 5

APPENDIX C

215-C GAS PREPARATION BUILDING AND 276-C SOLVENT HANDLING FACILITY FINAL HAZARD ANALYSIS

TABLE OF CONTENTS

C 215-C GAS PREPARATION BUILDING AND 276-C SOLVENT HANDLING FACILITY FINAL HAZARD ANALYSIS ..... C-i

C.1 INTRODUCTION C-1

C.2 HAZARD IDENTIFICATION C-1

C.2.1 Objective C-1
C.2.2 Methodology C-1
C.2.3 Radiological Inventory C-2
C.2.4 Nonradiological Inventory C-2
C.2.5 Hazards Identification Table C-3

C.3 HAZARDS EVALUATION C-4

C.3.1 Consequence Ranking C-4
C.3.2 Likelihood Ranking C-5
C.3.3 Evaluation of the Preliminary Hazard Analysis C-6
C.3.4 Final Hazards Analysis C-6

C.4 REFERENCES C-7

TABLES

C-1. Inventory Information Identification/Evaluation for 251-C and 276-C Facilities C-9
C-2. 215-C and 276-C Facilities Hazard Identification. C-10
C-3. Hazards, Consequence, Frequency, and Mitagations. C-13

APPENDIX C
215-C GAS PREPARATION BUILDING AND 276-C SOLVENT HANDLING FACILITY FINAL HAZARD ANALYSIS

C.1 INTRODUCTION

This appendix contains the preliminary hazard analysis (PHA) for the 215-C Gas Preparation Building and 276-C Solvent Handling Facility, which includes the hazards identification and evaluation. Section C.2 identifies the objective and methodology used to identify hazards, addresses the disparities between various published estimates of radioactive material inventories, describes nonradioactive materials identified, and explains the format and content of the hazards identification table. Section C.3 describes the hazards evaluation that was performed, the PHA table, and the qualitative ranking criteria used in the PHA.

C.2 HAZARD IDENTIFICATION

C.2.1 Objective

The objective of the hazard identification process is to provide a basis from which to analyze the hazards associated with a facility. To achieve this objective, the hazards identification process must address the following:

- Characteristics of the inventory of hazardous substances in the facility
- Sources of energy inside the facility capable of interacting with those inventories
- Sources of energy outside the facility capable of interacting with those inventories
- Nonroutine hazards unique to the facility.

C.2.2 Methodology

The hazards identified during the hazard identification process were generated from various sources of information using the following methodology:

- Relevant documents were researched (e.g, published reports and drawings) to identify the inventories of hazardous substances in the 215-C Gas Preparation Building and 276-C Solvent Handling Facility.

- Interviews were held with cognizant operations, engineering, and management personnel.

C.2.3 Radiological Inventory

C.2.3.1 215-C Gas Preparation Building

The 215-C Gas Preparation Building is noted as containing low levels of radioactive contamination in numerous documents. A report issued in 1982 estimated a radionuclide inventory of 6 Ci total beta activity (RHO 1982). The facility was decontaminated and the equipment was removed in 1985 (DOE-RL 1993). Since that time, survey results have not found significant levels of activity (Egge 1997); therefore, it is assumed that the majority of radioactive materials were removed during the decontamination effort and only minor levels of contamination still remain. Table C-1 contains a summary of historical information regarding the radioactive inventory in this facility.

C.2.3.2 276-C Solvent Handling Facility

The 276-C Solvent Handling Facility was listed in one report, prior to decontamination (1984), as containing approximately 1 Ci of plutonium and 10 Ci of total beta (RHO 1982). One curie of plutonium, assuming it is all plutonium-239, would indicate a level in excess of the DOE-STD-1027-92 threshold levels for a Category 3 facility (DOE 1992). This Rockwell report gave no basis for the estimate of radioactive materials.

A Pacific Northwest Laboratory report, summarizing decommission status for numerous site facilities, contained datasheets dated 1975 that indicated the building may have low levels of contamination (PNL 1991). The 1975 data would indicate facility status after the halt of strontium activites in 1967 (Brevick et al. 1997).

In 1998, the remedial investigation/feasibility study plan for the 200 Areas listed the technical baseline document for the Semiworks Facility as WHC-SD-EN-ES-019 (DOE-RL 1998). That source is quoted in a 1993 U.S. Department of Energy report as indicating that the 1984 decontamination efforts had removed all contaminated equipment and had decontaminated all exposed surfaces (DOE-RL 1993).

It is therefore assumed that the majority of radioactive materials were removed during the decontamination effort and that a bounding inventory of 0.1 Ci of plutonium (assumed to be plutonium-239) and 1.0 Ci beta (assumed to be strontium-90) remain as surface contamination. Table C-1 contains a summary of historical information regarding the radioactive inventory in this facility.

C.2.4 Nonradiological Inventory

C.2.4.1 215-C Gas Preparation Building

Other hazards found in the 215-C Gas Preparation Building include deteriorated stairways, potential roof fall hazards, confined space, asbestos (e.g., piping and wire insulation), animals and insects, and potential for low levels or small quantities of legacy hazardous materials

(Egge 1997). These industrial and hygiene hazards are controlled by strictly limiting all access to the facility. The facility may not be entered without specific approval and specific safety evaluation.

No indication is given in any records or historical documents that hazardous chemicals, carcinogens, or explosives were handled. The facility provided air and inert gas to the 201-C Building, thus asphyxiants were present during operations. Because all equipment was removed during decontamination and decommissioning activities, no asphyxiants remain in bulk quantities.

C.2.4.2 276-C Solvent Handling Facility

The building is not currently entered, so it is assumed that industrial and hygiene hazards similar to those for the 215-C Building exist. The building contains bird droppings that will need to be cleaned up before further activities could take place in the building, which is dependent on funding and priorities.

C.2.5 Hazards Identification Table

The results of the hazards identification are presented in Table C-2 for both facilities. The column headings and content of the hazards identification table are described in the following subsections.

C.2.5.1 Column 1: Hazard Type

Column 1 identifies the type of hazard investigated. Hazard types include radiological, toxic material, carcinogens, biohazards, flammable/combustible material, reactive material, electrical energy, thermal energy, kinetic energy, high pressure, earthquake, flood, ash/snow, lightning, and high winds.

C.2.5.2 Column 2: Location

Column 2 identifies the location investigated for the presence of the hazard type. Refer to Chapter 2.0, Facility Description, for detailed information.

C.2.5.3 Column 3: Form

Column 3 specifies the form of the hazard type. This column is not intended to provide detailed identification of the chemical or physical form of the hazard type. Such detail is not considered at the hazard identification stage of a safety analysis.

C.2.5.4 Column 4: Quantity

Column 4 quantifies the hazard. Measured values are presented when relevant and available.

C.2.5.5 Column 5: Remarks

This column presents any information that provides a better understanding of the hazard type, location, form, or quantity.

C.2.5.6 Column 6: References

This column lists the references for the information provided in the other columns.

C.3 HAZARDS EVALUATION

A qualitative and systematic examination of the hazards associated with the 215-C and 276-C Facilities was conducted to do the following:

- Identify the events that could lead to releases of hazardous substances
- Rank these events based on potential consequences and frequency
- Identify engineered mitigative and preventative features that serve to control the hazard
- Identify the commitments and administrative controls necessary to manage the hazard

The results of this examination are reflected in the PHA (Table C-3). An explanation of the qualitative consequence and likelihood ranking criteria used in the table is provided in Section C.3.1.

C.3.1 Consequence Ranking

C.3.1.1 Consequence Rank I – Catastrophic

"Catastrophic" is the highest consequence rank that can be assigned in the hazard analysis. This rank addresses any event that can cause death and includes exposure to radioactive or toxic materials. This rank includes large exposures of offsite and onsite individuals to hazardous materials (i.e., no differentiation is intended between offsite and onsite individuals).

C.3.1.2 Consequence Rank II – Severe

The "severe" consequence rank encompasses events that could produce severe injury, significant lost work time, or long-term disability. This rank refers to acute consequences, implying the radioactive or toxic material exposure must be severe and occur a relatively short time after exposure. For example, radiation doses on the order of 200 rem result in severe debilitating effects that would be considered acute and severe. Similarly, contact with toxic chemicals (e.g., acids, bases, or toxic gases) that could produce severe injury would be considered to have prompt effects. As is the case for the "catastrophic" consequence rank, no differentiation is intended between the offsite and onsite individuals.

C.3.1.3 Consequence Rank III – Unplanned Releases

The "unplanned release" consequence rank is used to account for events that could release hazardous materials outside the facility but would not result in a "severe" or "catastrophic" designation. Unlike the "severe" and "catastrophic" consequence rank, the "unplanned release" rank is intended to also encompass environmental insults. Consequence rank III is further divided into three sub-groups to account for varying insults to the environment: (1) releases resulting in significant amounts of the environment being contaminated, (2) releases resulting in small amounts of the environment being contaminated, and (3) releases that may or may not exceed regulatory limits, but would affect insignificant amounts of the environment.

C.3.1.4 Consequence Rank IV – Minor

The "minor" consequence rank encompasses events that result in minor injury but no release outside of the facility. While many events that would receive this designation are screened out of the hazards analysis, some may be included to provide documentation that were considered as potential event initiators. This "consequence" rank includes effects from biological hazards such as animal and insect bites or stings, or disease from contact with bird or bat droppings.

C.3.2 Likelihood Ranking

C.3.2.1 Likelihood Rank A – Frequent

Likely to occur frequently. Such an event could occur on an annual basis.

C.3.2.2 Likelihood Rank B – Probable

Likely to occur several times in the life of an item. Such an event could occur at a frequency of once in 10 years ($1x10^{-1}$/yr).

C.3.2.3 Likelihood Rank C – Occasional

Likely to occur sometime in the life of an item. Such an event could occur at a frequency of once in 100 years ($1x10^{-2}$/yr).

C.3.2.4 Likelihood Rank D – Remote

Unlikely but possible to occur in the life of an item. Such an event could occur at a frequency of once in 10,000 years ($1x10^{-4}$/yr).

C.3.2.5 Likelihood Rank E – Improbable

So unlikely that it can be assumed occurrence will not be experienced. Such an event could occur at a frequency of once in 1 million years ($1x10^{-6}$/yr).

C.3.3 Evaluation of the Preliminary Hazard Analysis

Table C-1 summarizes the historic information on levels of radioactive materials. Based on the survey information, the 215-C Building is assumed to contain only low levels of mixed fission and possibly some alpha contamination.

Less information is available for the 276-C Facility. If it is assumed that decontamination efforts removed the contaminated equipment, only contaminated surfaces are likely to remain. A conservative estimate of the radioactive materials remaining would be approximately 10% of the inventory listed in 1982: 0.1 Ci of plutonium and 1.0 Ci of beta. The facilities present no significant or unique hazard from these materials, toxic materials, or carcinogens because of the previous decontamination efforts.

Table C-4 summarizes the key hazards identified, their consequences and frequencies, and mitigative actions the facilities are already taking. Likelihood will be reduced further through programs already in existence such as training, work controls, and emergency preparedness.

Other hazards noted at 215-C include the following (Egge 1997):

- Falls (e.g., absence of guard rails, deteriorated stairways, and roof of unknown integrity)
- Confined spaces (e.g., basin/vault)
- Asbestos (e.g., piping, electrical wire insulation, ventilation components, and transite)

No recent specific information is available for the 276-C Facility, except the observation from surveillances that large quantities of bird droppings are present from now-closed access points. It is estimated that hazards similar to those at the 215-C Building exist because the facilities were built, operated, and decommissioned at roughly the same time. The 276-C Facility is a four-story building and the consequence due to a fall could be much greater. The 276-C Facility has no vault or basin area that would qualify as a confined space.

C.3.4 Final Hazards Analysis

No significant quantities of radioactive materials remain in the 215-C Building. Because the actual levels in all areas of the facility are not definitively known, it is assumed the facility is radiological according to BHI-DE-01, *Design Engineering Procedures*, Engineering Department Project Instruction (EDPI) 4.28-01 "Hazard Classification."

Using the conservative estimate above of the radioactive materials remaining in the 276-C Facility of 0.1 Ci of plutonium and 1.0 Ci of beta, assuming the plutonium to be all plutonim-239, and the beta to be all strontium-90, these quantities would be below the threshold quantities listed in DOE-STD-1027-92 (DOE 1992) for a nuclear facility. The facility is therefore considered to be a radiological facility according to BHI-DE-01, EDPI-4.28-01 "Hazard Classification."

C.4 REFERENCES

BHI-DE-01, *Design Engineering Procedures Manual*, Bechtel Hanford, Inc., Richland, Washington.

Brevick, C. H., J. L. Stroup, and J. W. Funk., 1997, *Historical Tank Content Estimates for the Southeast Quadrant of the Hanford 200 Areas*, HNF-SD-WM-ER 350, Rev. 1, Fluor Daniel Northwest, Inc., Richland, Washington.

DOE, 1992, Hazard Classification and Accident Analysis Techniques for Compliance with DOE Order 5480.23, Nuclear Safety Analyses Reports, DOE-STD-1027-92, U.S. Department of Energy, Washington, D.C.

DOE-RL, 1993, *Semiworks Source Aggregate Area Management Study Report*, DOE/RL-92-18, Rev. 0, U.S. Department of Energy, Richland Operations Office, Richland, Washington.

DOE-RL, 1998, *200 Areas Remedial Investigation/Feasibility Study Implementation Plan – Environmental Restoration Program*, DOE/RL-98-28, Rev. 0, U.S. Department of Energy, Richland Operations Office, Richland, Washington.

Egge, R. G., 1997, *Hanford Surplus Facilities Hazards Identification Documents*, BHI-00066, Rev. 4, Bechtel Hanford, Inc., Richland, Washington.

GE, 1951, *Hot Semiworks Manual, Part 1*, HW-22955, General Electric Company, Richland, Washington.

Kiser, S. K., and T. L. Witt, 1994, *Hanford Surplus Facilities Programs Facilities Listings and Descriptions*, WHC-SP-0331, Rev. 1, Westinghouse Hanford Company, Richland, Washington.

PNL, 1991. *Resources Book – Decommissioning of Contaminated Facilities at Hanford*, PNL-7008, Pacific Northwest Laboratories, Richland, Washington.

RHO, 1982, *Rockwell Retired Contaminated Facility Listing and Description*, SD-DD-FL-001, Rockwell Hanford Operations, Richland, Washington.

WHC, 1993, *Risk Management Study for the Retired Hanford Site Facilities*, WHC-EP-0619, Westinghouse Hanford Company, Richland, Washington.

Table C-1. Inventory Information Identification/Evaluation for 251-C and 276-C Facilities.

Facility	Inventory	Source of Data	Date of Source Document	Technical Basis Evaluation
215-C	6 Ci beta	SD-DD-FL-001, p. 42 (RHO 1982)	1982	No basis provided for estimated inventory. Reference notes that ventilation, heating, air conditioning, etc., noted as still active and that no areas are posted as radiological. Majority of contaminated equipment was removed during clean up work in 1985.
	Low levels	DOE/RL-92-18, Rev. 0, p. 2-7 (DOE-RL 1993)	1993	Based on decontamination status (reference notes that all equipment was removed and facility decontaminated)
	Below background	BHI-00066, p. 13-4 (Egge 1997)	1997	Based on survey results for inside facility
276-C	1 Ci Pu 10 Ci beta	SD-DD-FL-001, .p. 52 (RHO 1982)	1982	No basis provided for estimated inventory. Reference notes that ventilation, heating, air conditioning, etc., noted as still active. Radiation postings on filter housing in fan room and sightglass isolation valve on dilutent storage tank on second floor.
	Low levels	DOE/RL-92-18, Rev. 0, p. 2-10 (DOE-RL 1993)	1993	Based on decontamination status (reference notes that all radioactively contaminated equipment was removed and all exposed surfaces decontaminated). Assumption for analysis: 10% of original inventory is still present as surface contamination.

Table C-2. 215-C and 276-C Facilities Hazard Identification. (3 Pages)

Hazard Type	Location	Form	Quantity	Remarks	Reference
Radioactive material	215-C	Surface contamination	Low, see Table C-1 for estimated inventory	No equipment remains, facility decontaminated (loose materials removed at minimum).	DOE/RL-92-18, Rev. 0, p. 2-7 BHI-00066, p. 13-4 (Egge 1997)
	276-C	Surface contamination	Low, see Table C-1 for estimated inventory	No equipment remains, facility decontaminated (loose materials removed at minimum).	DOE/RL-92-18, Rev. 0, p. 2-10
Direct radiation	215-C 276-C	Mixed beta/alpha	Unlikely to be significant amount	Facility decontaminated, any large sources removed.	Survey records
Toxic materials	276-C	Trace residues	Unlikely to be significant amount	Facility decontaminated, any large sources removed.	DOE/RL-92-18, Rev. 0, p. 2-10
Carcinogens	276-C	Trace residues possible	Unlikely to be significant amount	Facility decontaminated, any large sources removed, no data available characterizing solvents used historically. Contamination had been limited to a diluent vessel on 3rd floor and filter housings. Facility used for offices and storage after decontamination.	DOE/RL-92-18, Rev. 0, p. 2-10 SD-DD-FL-001, p. 52 (RHO 1982)
Biohazards	215-C	Rodents, insects, snakes	Unknown	Noted in references, facilities not normally entered.	SD-DD-FL-001, p. 52 (RHO 1982) BHI-00066, p. 13-4 (Egge 1997) WHC-SP-0331, p. B-15 (Kiser and Witt 1994)
	276-C	Rodents, insects, snakes, birds	Quantity (total unknown) of bird guano exists, other biohazard information unknown	Noted in references, facilities not normally entered. Bird access was from openings which were closed at transition to S&M; to be cleaned up, pending funding and priority.	SD-DD-FL-001, p. 52 (RHO 1982) BHI-00066, p. 13-4 (Egge 1997) WHC-SP-0331, p. B-15 (Kiser and Witt 1994) S&M surveillance

Table C-2. 215-C and 276-C Facilities Hazard Identification. (3 Pages)

Hazard Type	Location	Form	Quantity	Remarks	Reference
Asphyxiant	215-C 276-C	None identified	None identified	None.	SD-DD-FL-001, p. 52 (RHO 1982) BHI-00066, p.13-4 (Egge 1997)
Flammable material	215-C 276-C	None identified	None identified	None.	SD-DD-FL-001, p. 52 (RHO 1982) BHI-00066, p.13-4 (Egge 1997)
Reactive material (organic and nonorganic)	215-C 276-C	None identified	None identified	Small quantities of legacy materials possible.	SD-DD-FL-001, p. 52 (RHO 1982) BHI-00066, p.13-4 (Egge 1997)
Explosive material	215-C 276-C	None identified	None identified	None.	DOE/RL-92-18, p. 2-10, p. 2-7 (DOE-RL 1993)
Electrical energy	215-C	Power system disconnected at pole, based on visual observation	440 volt and 120/240 volt systems originally installed	A cover is noted as missing from electrical panel in 215-C.	HW-22955, p. 203.4-1 (GE 1951) BHI-00066, p. 13-4 Egge 1997) WHC-SP-0331, p. B-15 (Kiser and Witt 1994)
	276-C	Power system disconnected at pole, based on visual observation	480 volt and 120/240 volt systems originally installed	None.	HW-22955, p. 203.3-2 (GE 1951)
Thermal energy	215-C 276-C	None identified	None identified	None.	DOE/RL-92-18, p. 2-10, p. 2-7 (DOE-RL 1993)

Table C-2. 215-C and 276-C Facilities Hazard Identification. (3 Pages)

Hazard Type	Location	Form	Quantity	Remarks	Reference
Kinetic energy/high pressure	215-C 276-C	None identified	None identified	None.	DOE/RL-92-18, p. 2-10, p. 2-7 (DOE-RL 1993)
Criticality	215-C 276-C	None identified	None identified	None.	DOE/RL-92-18, p. 2-10, p. 2-7 (DOE 1993)
Earthquake	215-C 276-C	Fission products	Low levels	Facilities known to be in deteriorated state.	BHI-00066, p. 13-4 (Egge 1997) WHC-SP-0331, p. B-15 (Kiser and Witt 1994)
Flood	215-C 276-C	Fission products	Low levels	Location is on the 200 East Area Plateau above all known flood and run-off plains.	Engineering judgment
Ash/snow	215-C 276-C	Fission products	Low levels	Roofs known to be in poor condition.	BHI-00066, p. 13-4 (Egge 1997) WHC-SP-0331, p. B-16 (Kiser and Witt 1994)
Lightning	215-C 276-C	Fission products	Low levels	No known sources that would result in releases from lightning strike.	Engineering judgment
High winds	215-C 276-C	Fission products	Low levels	Facilities known to be in deteriorated state.	Engineering judgment

S&M = surveillance and maintenance

Table C-3. Hazards, Consequence, Frequency, and Mitagations.

Hazard	Causes	Mitagations in Use	Consequence Rank	Likelihood Rank
Release of radioactive materials	Earthquake, high winds, snow fall, ash	None	IIIb	D/E
Biohazards	Entering facilities; contacting hazard	Limit access	IV	B
Electrical shock	Entering facilities; contacting hazard	Limit access	IV	B
Falls, trips, confined spaces	Entering facilities; contacting hazard	Limit access	IV	B

DISTRIBUTION

U.S. Department of Energy
Richland Operations Office

C. A. Ashley	Controlled	A6-39
S. L. Bertness	Controlled	A5-14
P. J. Garcia	Controlled	H0-12
J. D. Goodenough	Controlled	H0-12
R. P. Grill	Controlled	A5-17
T. W. Ferns (1)	Controlled	H0-12
(2)	Uncontrolled	H0-12
DOE-RL Public Reading Room	Uncontrolled	H2-53

ERC Team

B. T. Allen, BHI	Controlled	S3-21
R. G. Egge, BHI	Controlled	S3-21
N. R. Kerr, BHI	Controlled	S3-21
S. P. Kretzschmar, BHI	Controlled	S3-21
A. R. Larson, BHI	Controlled	H0-18
D. W. Long, BHI	Controlled	X5-54
J. C. Work, BHI	Controlled	S3-20
200 W Library 271U (G. R. Fitzgerald))	Controlled	T7-05
200 E Library M0970 (C. M. Jones)	Controlled	S3-20
Document and Information Services (3)	Uncontrolled	H0-09
ERC Training	Controlled	H0-08
Frankie Friend and Associates	Uncontrolled	S3-21
Hanford Technical Library	Uncontrolled	P8-55
PNNL Technical Library	Uncontrolled	P8-55
SM&T Project File	Uncontrolled	S3-21