1249330
[0065437H]

Department of Energy
Richland Operations Office
P.O. Box 550
Richland, Washington 99352

18-AMRP-0107

MAY 2 4 2018

Ms. Alexandra K. Smith, Program Manager
Nuclear Waste Program
Washington State Department of Ecology
3100 Port of Benton Boulevard
Richland, Washington 99354

Dear Ms. Smith:

SUPPLEMENTAL INFORMATION FOR THE PLUTONIUM URANIUM EXTRACTION (PUREX) STORAGE TUNNELS, OPERATING UNIT GROUP 2

In reference to the Washington State Department of Ecology's letter (18-NWP-065-Reissue) dated April 20, 2018, this transmittal contains supplemental information for the completeness determination for the PUREX Storage Tunnels, Class 3 Permit Modification Request. Included are the Certification for supplemental information for the completeness determination for the PUREX Storage Tunnels permit modification request (Attachment 1) and the supplemental information for the PUREX Storage Tunnels permit modification request (Attachment 2).

Contents of Attachment 2:

- H-2-837310, Passive Ventilation Skid, (sheet 1 of 2)
- H-2-837310, Passive Ventilation Skid, (sheet 2 of 2)
- H-2-837312, Drawing List, Notes, and Legend (sheet 1)
- H-2-837313, Site Plan (sheet 1)
- H-2-837314, Enlarged Site Plan (sheet 1 of 3)
- H-2-837314, Enlarged Site Plan (sheet 2 of 3)
- H-2-837314, Enlarged Site Plan (sheet 3 of 3)
- H-2-837316, Grout Insertion Device (sheet 1 of 2)
- H-2-837316, Grout Insertion Device (sheet 2 of 2)
- H-2-837317, Grout Insertion Extension Boom (sheet 1 of 3)
- H-2-837317, Grout Insertion Extension Boom (sheet 2 of 3)
- H-2-837317, Grout Insertion Extension Boom (sheet 3 of 3)
- H-2-837318, Lighting Rack Assembly (sheet 1)

RECEIVED
MAY 3 1 2018
EDMC

If you have any questions, please contact me or your staff may contact Joe Franco, Assistant Manager for the River and Plateau, on (509) 373-9971.

Sincerely,

Doug S. Shoop
Manager

AMRP:DBC

Attachments (2)

cc w/attachs:
D. B. Bartus, EPA
J. Bell, NPT
R. Buck, Wanapum
L. J. Cusack, CHPRC
S. L. Dahl-Crumpler, Ecology
D. R. Einan, EPA
M. N. Jaraysi, CHPRC
M. Johnson, CTUIR
R. Longoria, YN
K. Niles, ODOE
D. Rowland, YN
S. N. Schleif, Ecology
D. G. Singleton, CHPRC
B. L. Weese, Ecology
Administrative Record (TSD: S-2-1)
Ecology NWP Library (Hardcopy)
Environmental Portal
HF Operating Record (J. K. Perry, MSA, A3-01)

Certification
for

Supporting Permit Application Material for the Plutonium Uranium Extraction (PUREX) Storage Tunnels Closing Unit Group 19

The following certification statement is provided for the submittal of the following revised chapters and addenda for the Plutonium Uranium Extraction (PUREX) Storage Tunnels Closing Unit Group 19 Dangerous Waste Management Units contained in letter 18-AMRP-0107.

- Supplemental Information (Design Drawings)

I certify under penalty of law that this document and all attachments were prepared under my direction or supervision in accordance with a system designed to assure that qualified personnel properly gather and evaluate the information submitted. Based on my inquiry of the person or persons who manage the system, or those persons directly responsible for gathering the information, the information submitted is, to the best of my knowledge and belief, true, accurate, and complete. I am aware that there are significant penalties for submitting false information, including the possibility of fine and imprisonment for knowing violations.

Doug S. Shoop

Doug S. Shoop, Manager
Owner/Operator
U.S. Department of Energy
Richland Operations Office

5/24/18

Date

Certification
for

Supporting Permit Application Material for the Plutonium Uranium Extraction (PUREX) Storage Tunnels Closing Unit Group 19

The following certification statement is provided for the submittal of the following revised chapters and addenda for the Plutonium Uranium Extraction (PUREX) Storage Tunnels Closing Unit Group 19 Dangerous Waste Management Units contained in letter 18-AMRP-0107.

- Supplemental Information (Design Drawings)

I certify under penalty of law that this document and all attachments were prepared under my direction or supervision in accordance with a system designed to assure that qualified personnel properly gather and evaluate the information submitted. Based on my inquiry of the person or persons who manage the system, or those persons directly responsible for gathering the information, the information submitted is, to the best of my knowledge and belief, true, accurate, and complete. I am aware that there are significant penalties for submitting false information, including the possibility of fine and imprisonment for knowing violations.

L. Ty Blackford, President and CEO
Co-Operator
CHPRC
Richland, Washington

5/23/2018
Date

IS:

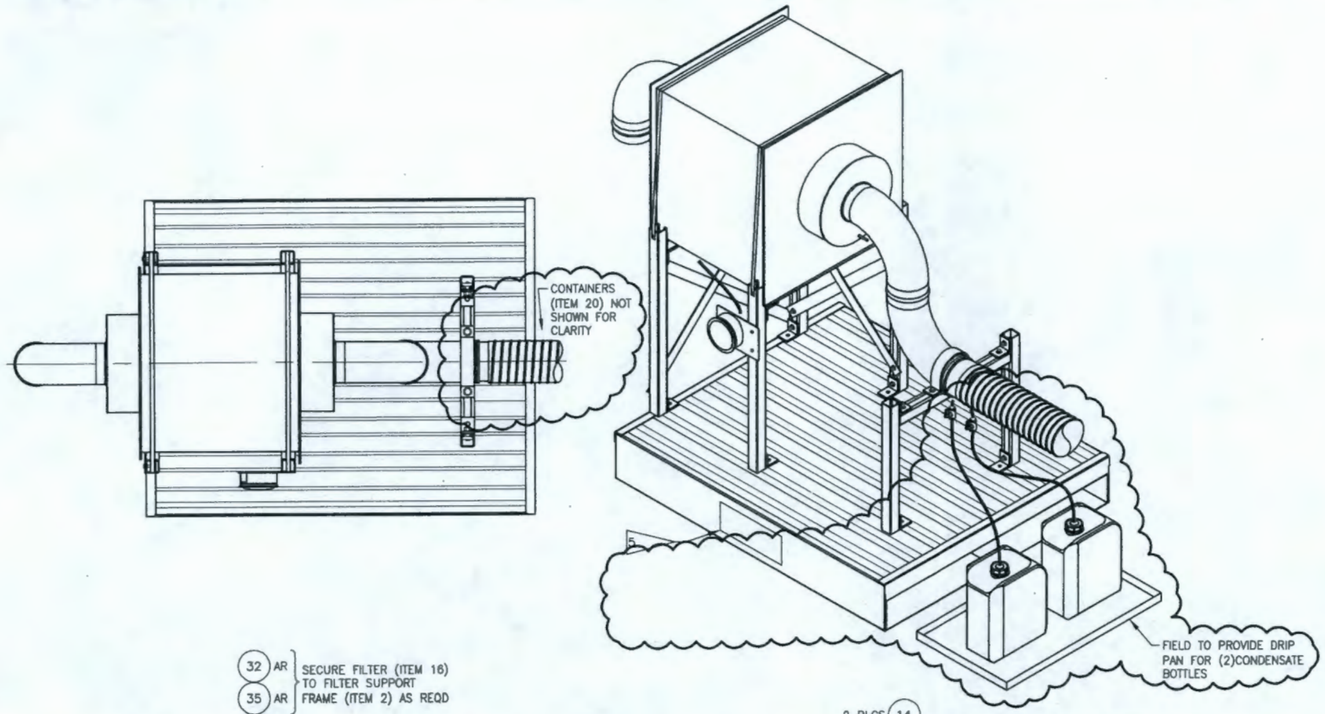

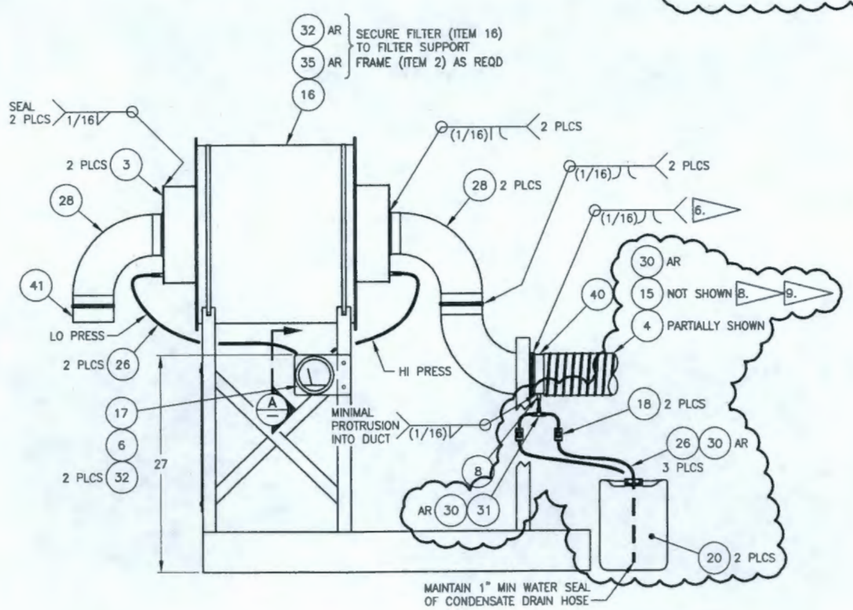

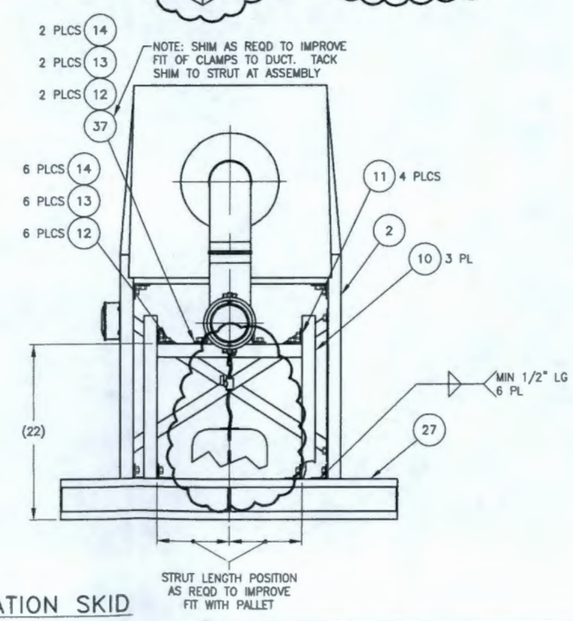

1 PASSIVE VENTILATION SKID
SCALE: 1 1/2" = 1'-0"

NOTES: (UNLESS OTHERWISE NOTED)

1. SEE H-2-837312 FOR ABBREVIATIONS, LEGEND, AND GENERAL NOTES.
2. DIMENSIONS AND TOLERANCES SHALL BE PER ANSI/ASME Y14.5-2009. ALL DIMENSIONS ARE IN INCHES. TOLERANCES ARE AS FOLLOWS, UNLESS OTHERWISE NOTED:

   DECIMAL: .X=±.1, .XX=±.03, .XXX=±.010
   FRACTIONAL: ±1/8
   ANGULAR: ±1 DEGREES
   MACHINED RADII: .02 MAXIMUM
   OVERALL HOSE LENGTHS: +3"/-0"
3. BREAK ALL SHARP EDGES AND REMOVE ALL BURRS.
4. ALL WELDING AND INSPECTION OF SHEET METAL COMPONENTS SHALL BE IN ACCORDANCE WITH AWS D9.1 (2012). VT FINAL PASS ON ALL WELDS. USE OF ASME B&PV CODE SECTION IX PROCEDURES AND QUALIFICATIONS IS ACCEPTABLE.
5. AFTER FINAL FABRICATION LABEL ASSEMBLY WITH 1/2" HIGH WHITE CHARACTERS ON A BLACK BACKGROUND. THE USE OF EITHER VINYL SHEET AND LETTERING OR ACRYLIC ENAMEL, ACRYLIC URETHANE, OR AN CHPRC APPROVED ALTERNATE PAINT IS ACCEPTABLE. LABEL INFORMATION SHALL BE AS FOLLOWS: PASSIVE VENTILATION SKID, DRAWING NUMBER, DASH NUMBER, AND ACTUAL WEIGHT.
6. TRIM ITEM 19 AS NECESSARY TO BOTTOM DRAIN TRANSITION TO ITEM 28 AND TO FACILITATE WELDING POSITION. OPTION TO FUSE WELD AND/OR USE ITEM 29 TO IMPROVE FIT.
7. BUBBLE LEAK TEST ASSEMBLY PER ASME AG-1 ASME-2015 SECTION TA-III-4400. USE TEST PRESSURE OF +5 IN WG.
8. USE DUCT SEAL COMPOUND BY RECTORSEAL, OR APPROVED EQUAL, AT INSTALLATION IN THE FIELD TO CREATE A SEAL WITH EXISTING TUNNEL RISER.
9. CONNECTION TO TUNNEL RISER 2 VIA 3" PENETRATION (REF H-2-58195 SECTION A-A).

CHPRC			DESIGN CHANGE NOTICE	
BASE DOC. NO. H-2-837310	SH/PG 1	REV. 1	DCN- PUREX2-006	PAGE _ of _

WAS:

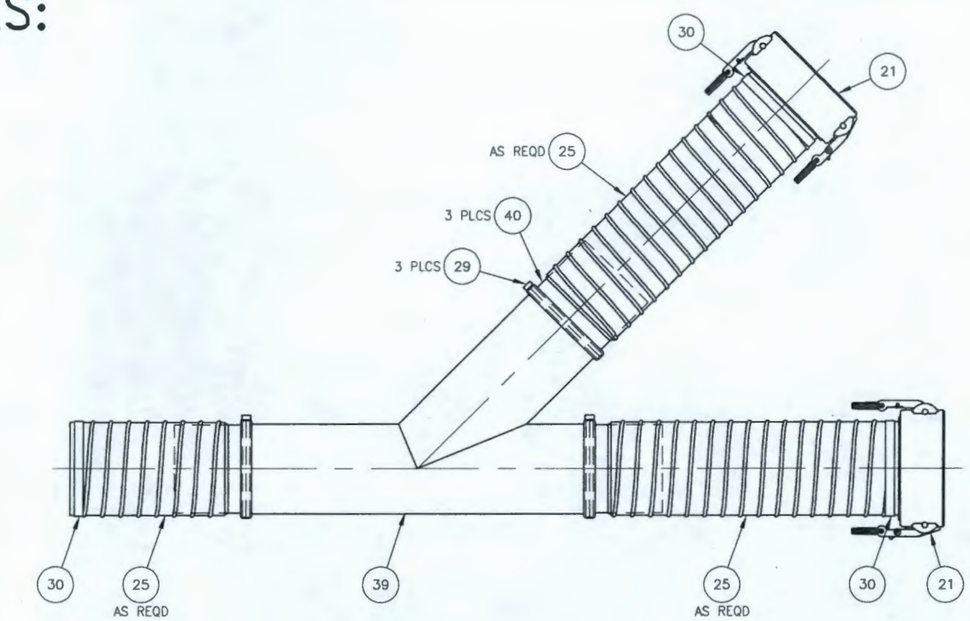

5 VENTILATION WYE HOSE
SCALE: 3" = 1'-0"

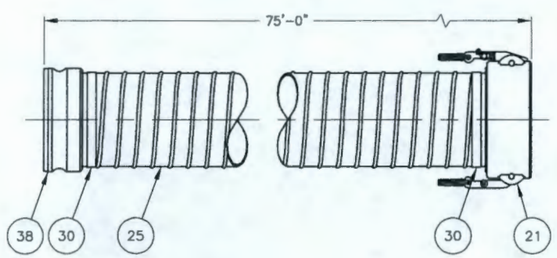

4 VENTILATION HOSE
SCALE: 3" = 1'-0"

IS:

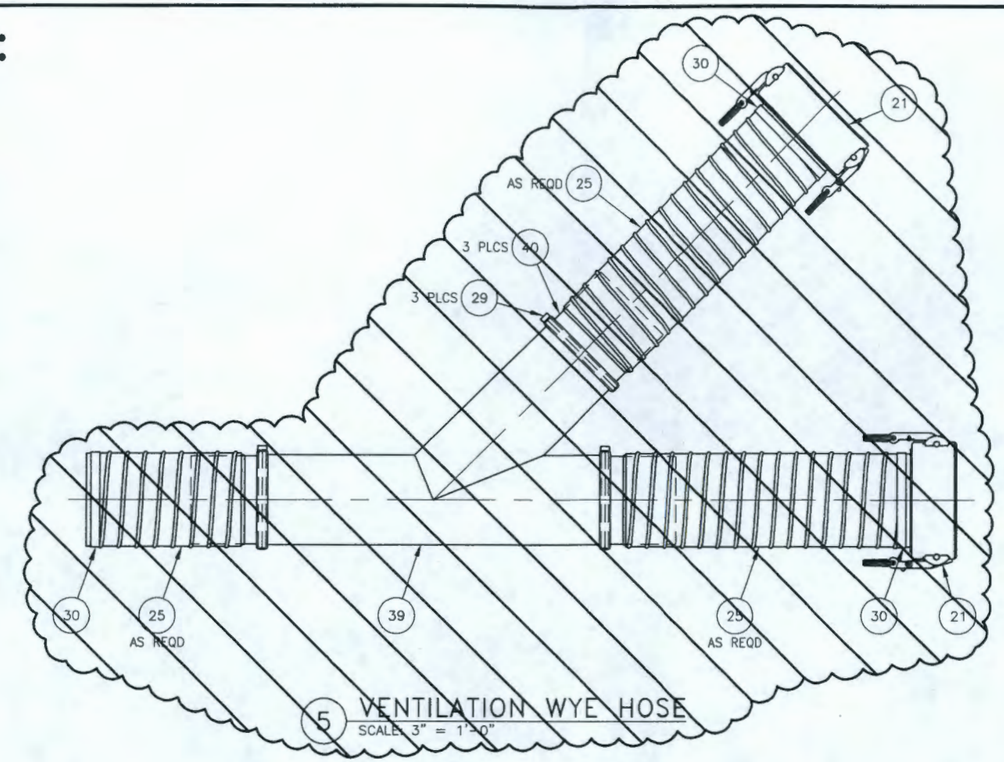

5 VENTILATION WYE HOSE
SCALE: 3" = 1'-0"

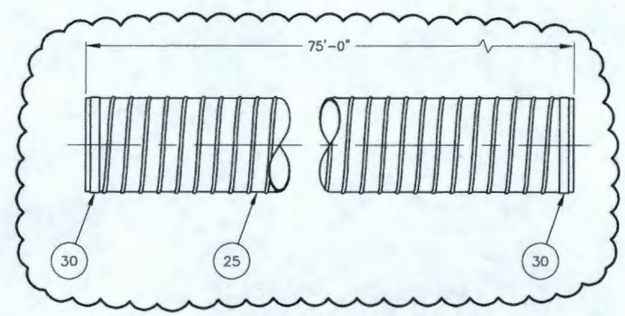

4 VENTILATION HOSE
SCALE: 3" = 1'-0"

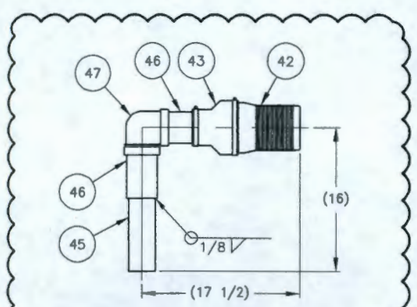

15 VENTILATION ADAPTER
SCALE: 1 1/2" = 1'-0"

DRAFTING NOTE: (TITLEBLOCK CHANGES)
CHANGE FIRST LINE OF DRAWING TITLE FROM "PUREX TUNNEL NO. 1" TO "PUREX TUNNEL NO. 2"

CHPRC			DESIGN CHANGE NOTICE	
BASE DOC. NO. H-2-837310	SH/PG 2	REV. 1	DCN- PUREX2-006	PAGE _ of _

DRAWING LIST

DRAWING NUMBER	TITLE
H-2-837312 SH 1	PUREX TUNNEL NO. 2 INTERIM STABILIZATION DWG LIST, NOTES, AND LEGEND
H-2-837313 SH 1	PUREX TUNNEL NO. 2 INTERIM STABILIZATION SITE PLAN
H-2-837314 SH 1	PUREX TUNNEL NO. 2 INTERIM STABILIZATION ENLARGED SITE PLAN
H-2-837314 SH 2	PUREX TUNNEL NO. 2 INTERIM STABILIZATION ENLARGED SITE PLAN
H-2-837314 SH 3	PUREX TUNNEL NO. 2 INTERIM STABILIZATION ENLARGED SITE PLAN
H-2-837316 SH 1	PUREX TUNNEL NO. 2 INTERIM STABILIZATION GROUT INSERTION DEVICE
H-2-837316 SH 2	PUREX TUNNEL NO. 2 INTERIM STABILIZATION GROUT INSERTION DEVICE
H-2-837317 SH 1	PUREX TUNNEL NO. 2 INTERIM STABILIZATION GROUT INSERTION EXT BOOM
H-2-837317 SH 2	PUREX TUNNEL NO. 2 INTERIM STABILIZATION GROUT INSERTION EXT BOOM
H-2-837317 SH 3	PUREX TUNNEL NO. 2 INTERIM STABILIZATION GROUT INSERTION EXT BOOM
H-2-837318 SH 1	PUREX TUNNEL NO. 2 INTERIM STABILIZATION LIGHTING RACK ASSEMBLY
H-2-837310 SH 1	PUREX TUNNEL NO. 2 INTERIM STABILIZATION PASSIVE VENTILATION SKID
H-2-837310 SH 2	PUREX TUNNEL NO. 2 INTERIM STABILIZATION PASSIVE VENTILATION SKID

ABBREVIATIONS

ACI	AMERICAN CONCRETE INSTITUTE
ADDTL	ADDITIONAL
AISC	AMERICAN INSTITUTE OF STEEL CONSTRUCTION
ALUM, AL	ALUMINUM
APPROX	APPROXIMATE
ASME	AMERICAN SOCIETY OF MECHANICAL ENGINEERS
ASTM	AMERICAN SOCIETY FOR TESTING AND MATERIALS
AWS	AMERICAN WELDING SOCIETY
B.O.	BOTTOM OF
BLDG	BUILDING
BM	BEAM
BOT	BOTTOM
BRG	BEARING
BTWN	BETWEEN
BTR	BUYER'S TECHNICAL REPRESENTATIVE
C	CHANNEL
CJP	COMPLETE JOINT PENETRATION
CL	CENTERLINE
CLR	CLEAR, CLEARANCE
CONC	CONCRETE
CONFIG	CONFIGURATION
CONN	CONNECTION
CONT	CONTINUOUS
COORD	COORDINATE
CTR	CENTER
CTRD	CENTERED
DBL	DOUBLE
DIA	DIAMETER
DIAG	DIAGONAL
DIM	DIMENSION
DIR	DIRECTION
DWG	DRAWING
(E)	EXISTING
EA	EACH
EF	EACH FACE
EL	ELEVATION
ELEC	ELECTRICAL
EMBED	EMBEDMENT
ENGR	ENGINEER
EQ	EQUAL
EQ SP	EQUAL SPACING
EQUIP	EQUIPMENT
EXST	EXISTING
EXTER	EXTERIOR
EW	EACH WAY
E/W	EAST/WEST DIRECTION
FDN	FOUNDATION
FG, F.G.	FINISH GRADE
FT	FOOT, FEET
FTG	FOOTING
FV	FIELD VERIFY
GA	GAUGE
GALV	GALVANIZE
HORIZ	HORIZONTAL
HSS	HOLLOW STRUCTURAL SECTION (RECTANGULAR OR CIRCULAR)
IBC	INTERNATIONAL BUILDING CODE
ID, I.D.	INSIDE DIAMETER
IN	INCH, INCHES
INTER	INTERIOR
L	ANGLE
LBS	POUND(S)
LG	LONG
LLH	LONG LEG HORIZONTAL
LLV	LONG LEG VERTICAL
LONG	LONGITUDINAL
MATL	MATERIAL
MAX	MAXIMUM
MECH	MECHANICAL
MIN	MINIMUM
MFR	MANUFACTURER
MFRD	MANUFACTURED
N	NORTH
NIC	NOT-IN-CONTRACT
NO.	NUMBER
NTS	NOT-TO-SCALE
N/S	NORTH/SOUTH DIRECTION
O TO O	OUT-TO-OUT
OC, O.C.	ON-CENTER
OD, O.D.	OUTSIDE DIAMETER
OPNG	OPENING
OPNGS	OPENINGS
OPP	OPPOSITE
PCF	POUNDS PER CUBIC FOOT
PERIM	PERIMETER
PJF	PREFORMED JOINT FILLER
PL	PLACE
PLCS	PLACES
PSF	POUNDS PER SQUARE FOOT
PSI	POUNDS PER SQUARE INCH
R	RADIUS
REINF	REINFORCING
REQD	REQUIRED
RECT	RECTANGULAR
SCHED	SCHEDULE
SH, SHT	SHEET
SIM	SIMILAR
SP	SPACE, SPACES
SPEC	SPECIFICATION
SQ	SQUARE
SST	STAINLESS STEEL
STD	STANDARD
STRUCT	STRUCTURAL
SYMM	SYMMETRICAL
T&B	TOP AND BOTTOM
THK	THICK
T.O.	TOP OF
TOC	TOP OF CONCRETE
TOS	TOP OF STEEL
TOW	TOP OF WALL
TS	HOLLOW STRUCTURAL SECTION (RECTANGULAR OR CIRCULAR)
TRANSV	TRANSVERSE
TYP	TYPICAL
UNIF	UNIFORM, UNIFORMLY
UON, UNO	UNLESS OTHERWISE NOTED
VERT	VERTICAL
WT	WEIGHT
W/	WITH

NOTE:
FOR ABBREVIATIONS NOT LISTED, SEE ASME Y14.38 "ABBREVIATION AND ACRONYMS" PUBLICATION AS DISTRIBUTED BY THE AMERICAN SOCIETY OF MECHANICAL ENGINEERS (ASME).

GENERAL NOTES

1. CODE: INTERNATIONAL BUILDING CODE, 2012 EDITION AS MODIFIED BY PRC-PRO-EN-097 REV 2.
2. CONTRACTOR SHALL BE RESPONSIBLE FOR VERIFICATION OF SITE CONDITIONS, INSTALLATION STANDARDS, AND CONSTRUCTION CONDITIONS. DISCREPANCIES BETWEEN SITE CONDITION AND DESIGN DRAWINGS SHALL BE BROUGHT TO THE IMMEDIATE ATTENTION OF THE ENGINEER-OF-RECORD.
3. WHEN DIRECTED BY THE STRUCTURAL ENGINEER SPECIAL INSPECTION AND TESTING SHALL BE PERFORMED BY AN INDEPENDENT INSPECTION/TESTING AGENCY HIRED BY THE CONTRACTOR AND APPROVED BY CHPRC. CONTRACTOR SHALL COORDINATE INSPECTION/TESTING REQUIREMENTS WITH THIS AGENCY AND CHPRC.
4. ELEVATIONS SHOWN IN THE DESIGN DRAWINGS ARE RELATIVE TO ELEVATIONS ON THE ORIGINAL DESIGN DRAWINGS.
5. DIMENSIONS SHOWN FOR EXISTING STRUCTURES AND EQUIPMENT ARE APPROXIMATE AND FOR REFERENCE ONLY. CONTRACTOR SHALL FIELD VERIFY ALL DIMENSIONS AND ELEVATIONS PRIOR TO FABRICATION AND CONSTRUCTION. VARIATIONS BETWEEN EXST DIMENSIONS AND/OR ELEVATIONS AND THE DESIGN DRAWINGS SHALL BE PROMPTLY REPORTED TO THE ENGINEER-OF-RECORD.
6. UNLESS OTHERWISE NOTED OR DIRECTED BY CHPRC, CONTRACTOR SHALL BE RESPONSIBLE TO RETAIN AND PROTECT EXISTING TUNNEL SYSTEM TO REMAIN INCLUDING STRUCTURAL SUPPORT SYSTEM, PIPE RISERS, WATER-FILLED DOOR, VENT SHAFT, AND OVERBURDEN.
7. CONTRACTOR SHALL BE RESPONSIBLE FOR ALL WORK RELATED TO CONSTRUCTION, ERECTION METHODS, BRACING, SHORING, RIGGING, GUYS, SCAFFOLDING, FORMWORK, ETC. REQUIRED TO SAFELY PERFORM THE WORK.
8. CONTRACTOR SHALL PROVIDE TEMPORARY BRACING AS REQUIRED TO MAINTAIN STABILITY DURING CONSTRUCTION.
9. DATUM: EL 744'-6" = TOC ROOF SLAB AT SOUTHWEST CORNER OF TUNNEL 2 NORTH WATER-FILLED DOOR CONCRETE SUPPORT STRUCTURE. CONTRACTOR SHALL ESTABLISH ELEVATION CONTROL FROM EXST GROUND MOUNTED BRASS SURVEY MARKER BASED ON DATUM ELEVATION.

DESIGN CRITERIA

1. LIVE LOAD: 25 PSF MINIMUM CONSTRUCTION LOAD
2. WIND LOAD (ULTIMATE): 110 MPH WIND SPEED (3-SEC GUST), EXPOSURE C
3. SOIL:
   - ALLOWABLE BEARING PRESSURE: 1500 PSF
   - LATERAL EARTH PRESSURE EQUIVALENT FLUID PRESSURE (AT-REST CONDITION):
     55 PSF/FT EXST TUNNEL SOIL COVER
     63 PSF/FT GRANULAR FILL
     0.5 AT-REST LATERAL EARTH PRESSURE COEFFICIENT
   - SOIL UNIT WEIGHT: 110 PCF TUNNEL COVER SOIL
     125 PCF GRANULAR FILL (AVERAGE MOIST UNIT WT)
4. STRUCTURE PERFORMANCE CATEGORY: PC-1, GENERAL SERVICE IN ACCORDANCE WITH PRC-PRO-EN-097, ENGINEERING DESIGN AND EVALUATION (NATURAL PHENOMENA HAZARD), REV 2.

EARTHWORK

1. CONTRACTOR SHALL BE RESPONSIBLE FOR DETERMINING THE SLOPE OF ALL EXCAVATIONS WHEN REQUIRED (1.5:1 MINIMUM HORIZONTAL-TO-VERTICAL UNLESS APPROVED BY THE STRUCTURAL ENGINEER) BASED ON THE TYPE AND CONDITION OF SOIL ENCOUNTERED AND FOR CONFORMING TO ALL LOCAL, STATE, AND FEDERAL REQUIREMENTS.
2. AT-REST LATERAL EARTH PRESSURE COEFFICIENTS:
   - $K_0 = 0.50$ HORIZONTAL GROUND SURFACE
   - $K_{0i} = K_0*[1+\sin(\theta)]$ SLOPING GROUND SURFACE (θ = SLOPE OF GROUND SURFACE IN DEGREES)
3. AVERAGE MOIST UNIT WEIGHT OF EXST TUNNEL COVER 110 PCF.
4. GROUNDWATER TABLE IS MORE THAN 300 FT BELOW PROJECT SITE.
5. MATERIALS:
   - BASE COURSE SHALL CONFORM TO WSDOT M41-10 SECTION 9-03.9(3).
   - TOP COURSE SHALL CONFORM TO WSDOT M41-10 SECTION 9-03.9(3) OR MAINTENANCE ROCK CONFORMING TO WSDOT M41-10 SECTION 9-03.9(4).
6. CLEAR AND GRUB ALL IMPROVEMENT AREAS SHOWN ON SITE PLAN. PLACE STRIPPINGS IN GOVERNMENT FURNISHED CONTAINERS FOR REMOVAL BY OTHERS.
7. UNIFORMLY MOISTEN OR AERATE SUBGRADE AND EACH SUBSEQUENT LAYER OF BASE COURSE AND TOP COURSE BEFORE COMPACTION TO WITHIN TWO (2) PERCENT OF OPTIMUM MOISTURE CONTENT. REMOVE AND REPLACE, OR SCARIFY AND AIR DRY, OTHERWISE SATISFACTORY SOIL MATERIAL THAT EXCEEDS OPTIMUM MOISTURE CONTENT BY MORE THAN TWO (2) PERCENT.
8. VIBRATORY EQUIPMENT SHALL NOT BE USED TO PROVIDE COMPACTION. ALL COMPACTION SHALL BE PERFORMED WITH PNEUMATIC AND SMOOTH DRUM ROLLERS (WITHOUT VIBRATION). COMPACT WITH 15-20 TON, SELF-PROPELLED, PNEUMATIC ROLLER A MINIMUM OF FOUR OVERLAPPING PASSES. ALTERNATELY, COMPACTION MAY BE PERFORMED WITH A 25-35 TON, SELF-PROPELLED, SMOOTH DRUM ROLLER WITH VIBRATORY CAPABILITY REMOVED. MAXIMUM RATE OF ROLLER TRAVEL SHALL NOT EXCEED 8 MPH. AFTER FINAL COMPACTION OF TOP COURSE, THE ENTIRE SURFACE SHALL BE ROLLED WITH A SMOOTH-WHEELED ROLLER. ROLLING SHALL CONTINUE UNTIL THE ENTIRE ROADWAY SURFACE PRESENTS A FIRM, DAMP, AND UNYIELDING SURFACE.
9. SCARIFY, MOISTURE CONDITION, AND COMPACT EXISTING SUBGRADE PRIOR TO PLACING BASE COURSE OR TOP COURSE.
10. PLACE BASE COURSE ON SUBGRADES FREE OF MUD, FROST, SNOW, OR ICE. ON PREPARED SUBGRADE, PLACE BASE COURSE LAYERS IN (LOOSE) THICKNESS NOT TO EXCEED SIX (6) INCHES. AREA OF PREPARED BASE COURSE SHALL BE SUFFICIENT TO PROVIDE FINAL ROAD WIDTHS SHOWN ON THE SITE PLAN. COMPACTED BASE COURSE SHALL BE A MINIMUM 4-INCH IN THICKNESS.
11. PLACE TOP COURSE ON PROOF ROLLED BASE COURSE OR SUBGRADE FREE OF MUD, FROST, SNOW, OR ICE. COMPACT AND ROLL TOP COURSE AS A FINISHED DRIVABLE SURFACE PROVIDING ROAD WIDTHS AS SHOWN ON SITE PLAN. COMPACTED TOP COURSE SHALL BE A MINIMUM 4-INCH IN THICKNESS. PLACE TOP COURSE LAYERS IN (LOOSE) THICKNESS NOT TO EXCEED SIX (6) INCHES.
12. FIELD QUALITY CONTROL:
    - ALLOW INSPECTION AGENCY TO OBSERVE SUBGRADE PREPARATION AND PLACEMENT OF EACH LAYER. PROCEED WITH SUBSEQUENT EARTH MOVING ONLY AFTER PREVIOUSLY COMPLETED WORK COMPLIES WITH REQUIREMENTS.

EARTHWORK (continued)

- PROOF-ROLL HAUL ROAD SUBGRADE WITH A FULLY LOADED (20 TON MINIMUM) TANDEM AXLE DUMP TRUCK TO IDENTIFY SOFT POCKETS AND AREAS OF EXCESS YIELDING. DO NOT PROOF-ROLL WHEN SUBGRADE IS WET OR SATURATED. SOFT POCKETS SHALL BE REMOVED AND REPLACED WITH COMPACTED BASE COURSE MATERIAL. REMOVALS DEEPER THAN 12-INCHES SHALL BE APPROVED BY BTR PRIOR TO EXCAVATION. RECONSTRUCT SUBGRADES DAMAGED BY FREEZING TEMPERATURES, FROST, RAIN, ACCUMULATED WATER, OR CONSTRUCTION ACTIVITIES, DURING HAUL ROAD CONSTRUCTION, AS DIRECTED BY BTR.
- WHEN INSPECTION AGENCY REPORTS THAT SUBGRADES, FILLS, OR BACKFILLS HAVE NOT MET PROOF ROLLING REQUIREMENTS OR ARE NOT RESULTING IN A FIRM AND UNYIELDING SURFACE, SCARIFY AND MOISTEN OR AERATE, OR REMOVE AND REPLACE SOIL MATERIALS TO DEPTH REQUIRED; RE-COMPACT UNTIL A FIRM AND UNYIELDING SURFACE IS OBTAINED.
- INSPECTION AGENCY SHALL DOCUMENT SOIL CONDITION, ESTIMATED QUANTITY PLACED, LOOSE LIFT THICKNESS, AND FINAL COMPACTED LIFT THICKNESS. INSPECTION AGENCY SHALL ALSO DOCUMENT COMPACTION EQUIPMENT, NUMBER OF PASSES OF EQUIPMENT PER LIFT, AND AVERAGE SPEED OF EQUIPMENT.

13. PROTECTION:
    - WHERE HAUL ROAD SURFACES BECOME ERODED, RUTTED, SETTLED, OR WHERE THEY LOSE COMPACTION DUE TO SUBSEQUENT CONSTRUCTION OPERATIONS OR WEATHER CONDITIONS DURING CONSTRUCTION, REPAIR/REGRADE AT DIRECTION OF BTR.

ENGINEERED GROUT

1. ENGINEERED GROUT FILLING OF THE TUNNEL INTERIOR IS FOR THE PURPOSE OF STABILIZATION AND SUPPORT OF THE EXST TUNNEL STRUCTURE AND FOR STABILIZATION AND CONTAINMENT OF CONTAMINATED EQUIPMENT LOCATED WITHIN THE TUNNEL.
2. UNLESS OTHERWISE APPROVED, GROUT MIX FORMULATION SHALL INCLUDE USE OF THE FOLLOWING MATERIALS:
   - CEMENT: TYPE I-II, ASTM C150
   - FLY ASH: CLASS F, 50% MINIMUM BY WEIGHT, ASTM C618
   - FINE AGGREGATE: NATURAL SANDS ONLY, ASTM C33 (MFRD SAND IS NOT ALLOWED)
   - WATER-REDUCING ADMIXTURE: TYPE A OR D, ASTM C494, CONTAINING NO CHLORIDES
   - SUPERPLASTICIZER: TYPE F OR G, ASTM C494
   - SET RETARDER: MASTERSET DELVO AS MFRD BY BASF
   - WATER: CLEAN AND POTABLE CONTAINING LESS THAN 500 PPM CHLORIDES OR NON-POTABLE WATER SUPPLIED FROM LOCAL FIRE HYDRANT
3. UNLESS OTHERWISE APPROVED, GROUT PROPERTIES SHALL INCLUDE THE FOLLOWING:
   - SELF CONSOLIDATING, CAPABLE OF HORIZONTAL PLACEMENTS UP TO 200 FEET
   - WATER/CEMENT RATIO (W/C): 0.40 FOR GROUT MIX DESIGN; 0.42 MAXIMUM PERMITTED IN THE FIELD
   - SPREAD: 28 INCH MIN DIAMETER UNLESS OTHERWISE APPROVED BY THE STRUCTURAL ENGINEER, ASTM C1611
   - MINIMUM COMPRESSIVE STRENGTH: 400 PSI AT 2-DAYS; 2000 PSI AT 28-DAYS
   - CAPABLE OF ENTERING AND FILLING OPENINGS AND VOIDS WITH 1/2 INCH MINIMUM DIMENSION
   - CAPABLE OF PLACEMENT FOR UP TO 3 HOURS MIN AFTER ADDING CEMENT TO WATER, DEMONSTRATED THROUGH DOCUMENTED TRIAL BATCH TESTING
4. GROUT MIX DESIGN SHALL BE DEVELOPED IN COLLABORATION WITH THE STRUCTURAL ENGINEER AND DEMONSTRATED TO MEET DESIGN AND CONSTRUCTION PROJECT REQUIREMENTS THROUGH A MINIMUM OF (2) TWO DOCUMENTED TRAIL BATCH TESTING THAT ARE WITNESSED, REVIEWED, AND APPROVED BY THE STRUCTURAL ENGINEER.
5. TRIAL BATCH TESTING SHALL BE PERFORMED AS DIRECTED BY THE STRUCTURAL ENGINEER AND SHALL INCLUDE THE FOLLOWING:
   - MINIMUM FLOW: 80 LINEAR FEET HORIZONTALLY WITHOUT SEGREGATION
   - TEMPERATURE: ASTM C1064
   - TIME OF SET: FINAL SET TIME
   - DENSITY: ASTM C642
   - COMPRESSIVE STRENGTH: ASTM C39 USING 4" DIA x 8" TEST CYLINDERS, MIN 1 PAIR CYLINDERS TESTED AT 1, 2, 3, 7 AND 28 DAYS AFTER SAMPLING
6. GROUT FIELD QUALITY CONTROL SHALL INCLUDE THE FOLLOWING:
   - PROVIDE ADEQUATE FACILITIES FOR SAFE STORAGE AND PROPER CURING OF GROUT TEST CYLINDERS ON SITE FOR FIRST 24 HOURS INCLUDING ADDITIONAL TIME AS REQUIRED BEFORE TRANSPORTING TO TEST LAB FOR CYLINDERS TO BE TESTED AT 3, 7, AND 28 DAYS.
   - PROVIDE GROUT FOR TESTING INCLUDING SLUMP FLOW, TEMPERATURE, UNIT WEIGHT AND MAKING OF GROUT TEST CYLINDERS AFTER FIELD ADDITION OF SUPERPLASTICIZERS AND WORKABILITY-RETAINING ADMIXTURES.
   - MINIMUM OF ONE SET OF GROUT SAMPLES (2 CYLINDERS) SHALL BE CAST AND TESTED FOR EVERY 170 CUBIC YARDS PLACED PER DAY, WITH SAMPLES TAKEN FROM RANDOMLY SELECTED TRUCKS. FREQUENCY OF TESTING MAY BE INCREASED AT DISCRETION OF STRUCTURAL ENGINEER. VISUAL INSPECTION OF EACH TRUCK SHALL BE PERFORMED BY THE STRUCTURAL ENGINEER (OR DESIGNATED REPRESENTATIVE) TO VISUALLY CONFIRM GROUT FLOWABILITY CHARACTERISTICS ARE CONSISTENT WITH GROUT TRIAL BATCH TEST RESULTS.
   - TESTING SHALL BE PERFORMED IN ACCORDANCE WITH:
     ASTM C1611 SLUMP FLOW
     ASTM C1064 TEMPERATURE
     ASTM C138 UNIT WEIGHT, YIELD
     ASTM C39 COMPRESSIVE STRENGTH

STEEL

1. UNLESS OTHERWISE NOTED OR APPROVED, STRUCTURAL STEEL AND FASTENERS SHALL CONFORM TO AS NOTED ON FABRICATION DRAWINGS.

WELDING

1. UNLESS OTHERWISE NOTED OR APPROVED, WELDING SHALL BE PERFORMED IN ACCORDANCE WITH APPLICABLE SPECIFICATIONS AND CODES OF THE AMERICAN WELDING SOCIETY (AWS).

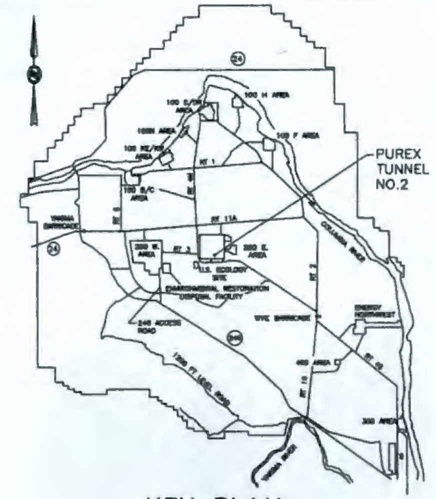

KEY PLAN
SCALE: NONE

LEGEND

- ECOLOGY BLOCK
- FIRE HYDRANT
- PARKING BLOCK
- POWER POLE GUY ANCHOR
- POLE NO. — POWER POLE
- XFMR NO. — POLE MOUNTED TRANSFORMER
- SLOPE (IN PLAN)
- SLOPE (IN ELEVATION)
- WORK POINT
- VAULT
- CAMERA TOWER
- SURVEILLANCE EQUIPMENT
- ITEM TO BE REMOVED
- SIGN AND/OR T-POST
- SIGN AND/OR T-POST
- LIGHT POLE
- BURIAL GROUND MARKER POST
- CONCRETE
- EARTHEN FILL
- EARTH
- WOOD
- —X— SECURITY FENCE
- UNPAVED ROAD
- PAVED ROAD
- —XX— HAZARDOUS AREA FENCE
- —SL— STREET LIGHT POWER LINE
- —C— 13.8KV DISTRIBUTION LINE
- —H— OVERHEAD SECONDARY POWER LINE
- —STM— STEAM LINE
- GROUT TRUCK ROUTE

DWG NUMBER	TITLE
DRAWING TRACEABILITY LIST	

REF NUMBER	TITLE
H-2-837293	CONSTR TRAILER SITE PLAN

REFERENCES
NEXT USED ON END ITEM

REV	DESCRIPTION
0	RELEASED PER DCN-PUREX2-003

REVISIONS

BLDG. NO. 202A 218E15
INDEX NO. 0000 0100

CAUTION
NOT COMPLETE WITHOUT CURRENT CHANGE DOCUMENTS FROM DATABASE

ATTENTION
DESTROY THIS DOCUMENT BY SHREDDING MAY CONTAIN SENSITIVE INFORMATION

NAME	COMPANY
RC BRINKLEY	CHPRC
J KUMAR	CHPRC
BJ HANNA	CHPRC
DESIGN AUTHORITY: BJ HANNA	CHPRC

U.S. DEPARTMENT OF ENERGY
Richland Operations Office

PUREX TUNNEL NO. 2
INTERIM STABILIZATION
DWG LIST, NOTES, AND LEGEND

SIZE	DRAWING NUMBER	SHEET	REV
F	H-2-837312	1	0

SCALE: SHOWN
PLOTID

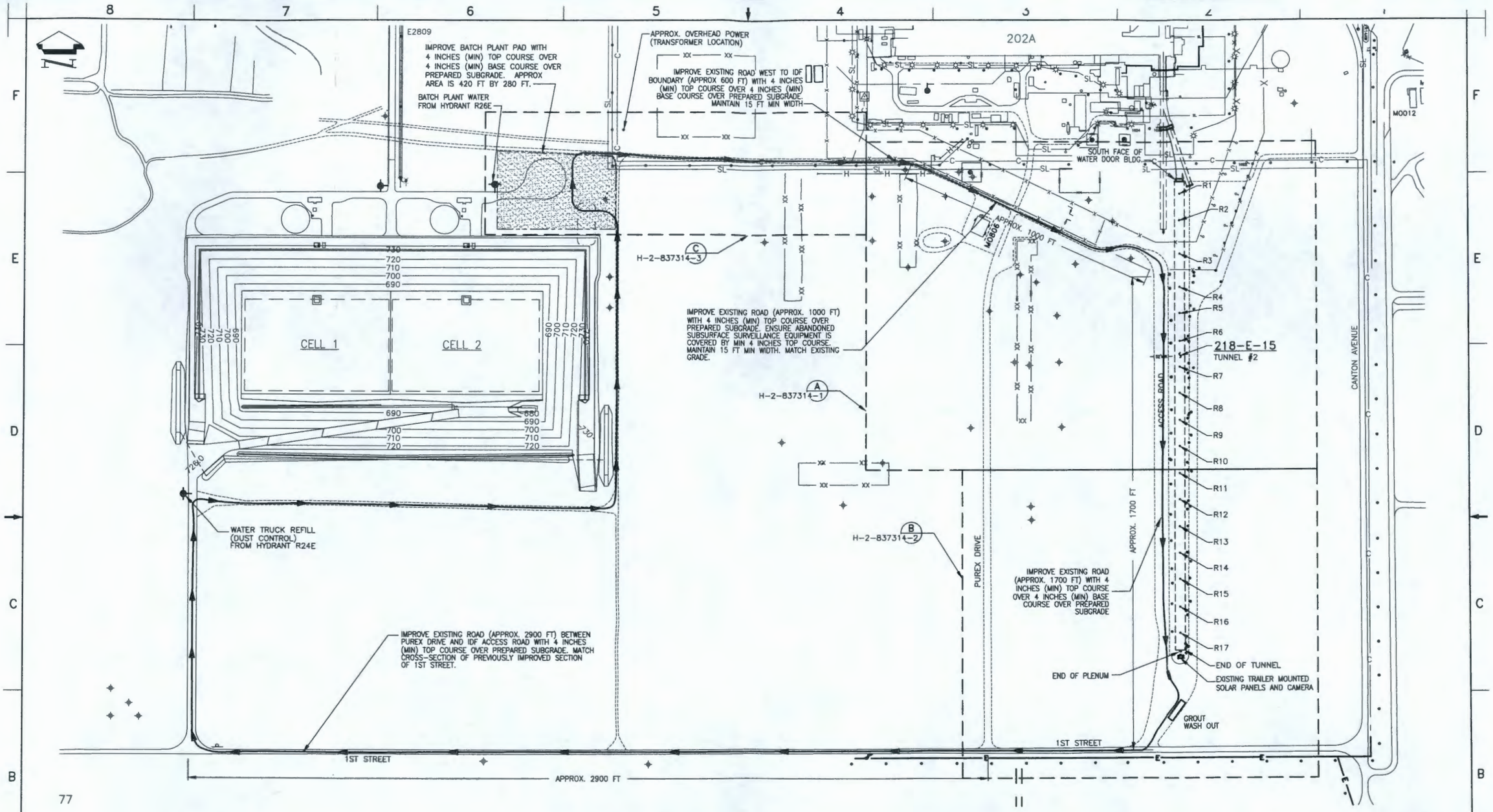

SITE PLAN

SCALE: 1" = 150'

0 75 150 300 600

SCALE IN FEET

NOTES:

1. SEE H-2-837312 FOR ABBREVIATIONS, LEGEND, AND GENERAL NOTES.

DWG NUMBER	TITLE
H-2-837312	PUREX TUNNEL NO. 2 DWG LIST, NOTES, & LEGEND
H-2-58191	TUNNEL #2 PLOT PLAN
H-2-55586	TUNNEL #1 PLOT PLAN

DRAWING TRACEABILITY LIST

REF NUMBER	TITLE
NEXT USED ON H-2-837312-1	

REFERENCES

REV NO.	DATE	DESCRIPTION
0		INITIAL RELEASE PER DCN-PUREX2-003

REVISIONS

BLDG. NO. 202A 218E15 M0806

INDEX NO. 0000 0110

CAUTION: NOT COMPLETE WITHOUT CURRENT CHANGE DOCUMENTS FROM DATABASE

ATTENTION: DESTROY THIS DOCUMENT BY SHREDDING MAY CONTAIN SENSITIVE INFORMATION

NAME	DATE	SIGNATURE
J. KUMAR		DRAWN
RC BRINKLEY		DRAWN
BJ HANNA		DRAWN
BJ HANNA		CHKD

U.S. DEPARTMENT OF ENERGY
Richland Operations Office

PUREX TUNNEL NO. 2 INTERIM STABILIZATION SITE PLAN

SIZE F | DRAWING NUMBER H-2-837313 | SHEET 1 | REV 0

SCALE SHOWN

PLOTTED

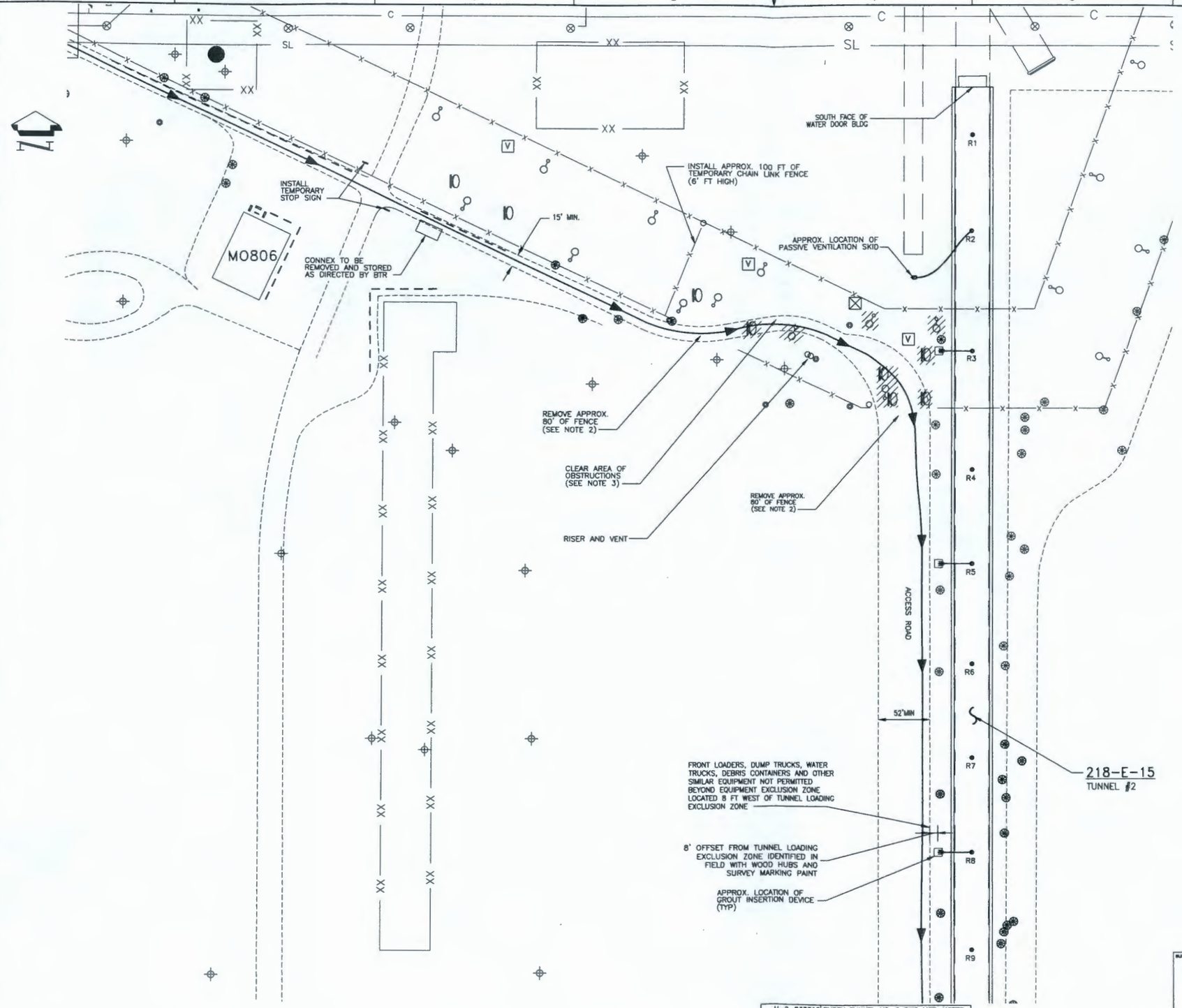

A ENLARGED SITE PLAN
H-2-837313-1 SCALE: 1" = 40'

NOTES:

1. SEE H-2-837312 FOR ABBREVIATIONS, LEGEND, AND GENERAL NOTES.
2. ROLL CHAIN LINK FABRIC OUT OF HARMS WAY. REMOVE POST AND SAVE. SAVE ALL PARTS FOR REINSTALLATION.
3. CLEAR AREA TO INCLUDE:
   A. REMOVE LIGHT POSTS INDICATED ON DRAWING. VERIFY ABSENCE OF VOLTAGE PRIOR TO REMOVAL. UNBOLT POSTS, SIZE REDUCE TO NO LONGER THAN 6 FEET, AND PLACE IN CONTAINER FOR DISPOSAL BY OTHERS. CUT AND CAP CONDUCTORS. CUT OFF BOLTS AND CONDUIT FLUSH WITH CONCRETE, AND INSTALL CONDUIT PLUG/CAP. ENSURE TOP COURSE COVERS CONCRETE TO PROVIDE LEVEL AND SAFE DRIVING SURFACE. ABANDON-IN-PLACE CONCRETE FOOTINGS.
   B. REMOVE SURVEILLANCE EQUIPMENT UNITS INDICATED ON DRAWING. VERIFY ABSENCE OF VOLTAGE PRIOR TO REMOVAL. CUT AND CAP CONDUCTORS. CUT EQUIPMENT SUPPORTS AND CONDUIT 6 INCHES BELOW GRADE (MAX), INSTALL CONDUIT PLUG/CAP, AND ABANDON-IN-PLACE. SIZE REDUCE DEBRIS TO NO LONGER THAN 6 FEET, AND PLACE IN CONTAINERS FOR DISPOSAL BY OTHERS. ENSURE TOP COURSE COVERS ABANDONED SUPPORTS AND CONDUITS TO PROVIDE LEVEL AND SAFE DRIVING SURFACE.

TUNNEL #2 RISERS

RISER NO.	NOTE	DISTANCE FROM SOUTH FACE OF WATER DOOR BLDG	RISER UTILIZATION DESCRIPTION
1	N/A	47.17'	NOT USED
2	1	141.18'	VENTILATION
3	2	284.66'	GROUT INSERTION DEVICE W/ LIGHT AND CAMERA
4	3	383.97'	LIGHT (CAMERA OPTIONAL)
5	2	478.08'	GROUT INSERTION DEVICE W/ LIGHT AND CAMERA
6	N/A	578.64'	NOT USED
7	3	672.79'	LIGHT (CAMERA OPTIONAL)
8	2	767.37'	GROUT INSERTION DEVICE W/ LIGHT AND CAMERA
9	3	864.71'	LIGHT (CAMERA OPTIONAL)
10	3	959.18'	LIGHT (CAMERA OPTIONAL)
11	2	1056.74'	GROUT INSERTION DEVICE W/ LIGHT AND CAMERA
12	3	1151.12'	LIGHT (CAMERA OPTIONAL)
13	N/A	1248.60'	NOT USED
14	2	1342.64'	GROUT INSERTION DEVICE W/ LIGHT AND CAMERA
15	3	1436.97'	LIGHT (CAMERA OPTIONAL)
16	2	1537.64'	GROUT INSERTION DEVICE W/ LIGHT AND CAMERA
17	3	1631.87'	LIGHT (CAMERA OPTIONAL)
--	N/A	1688.00'	END OF TUNNEL
--	N/A	1695.00'	END OF PLENUM

1. DETAIL 15, DRAWING H-2-837310, SHEET 2
2. DETAIL 1, DRAWING H-2-837316, SHEET 1
3. DETAIL 2, DRAWING H-2-837318, SHEET 1

DWG NUMBER	TITLE
DRAWING TRACEABILITY LIST	

REF NUMBER	TITLE
H-2-837312	PUREX TUNNEL NO. 2 DWG LIST, NOTES, & LEGEND
H-2-837293	CONSTR TRAILER SITE PLAN
H-2-58191	TUNNEL #2 PLOT PLAN
H-2-55586	TUNNEL #1 PLOT PLAN
REFERENCES	
NEXT USED ON H-2-837313-1	

REV NO.	DESCRIPTION
0	INITIAL RELEASE PER DCN-PUREX2-003
REVISIONS	

BLDG. NO. 202A 218E15 M0806

INDEX NO. 0000 0110

CAUTION
NOT COMPLETE WITHOUT CURRENT CHANGE DOCUMENTS FROM DATABASE

ATTENTION
DESTROY THIS DOCUMENT BY SHREDDING MAY CONTAIN SENSITIVE INFORMATION

NAME	DATE	COMPANY
DRAWN BY: N KUMAR		CHPRC
DESIGN BY: RC BRINKLEY		CHPRC
DESIGN BY: BJ HANNA		CHPRC
DESIGN AUTHORITY: BJ HANNA		CHPRC

U.S. DEPARTMENT OF ENERGY
Richland Operations Office

PUREX TUNNEL NO. 2
INTERIM STABILIZATION
ENLARGED SITE PLAN

SIZE F | DRAWING NUMBER H-2-837314 | SHEET 1 | REV 0

SCALE SHOWN

PLOTTED

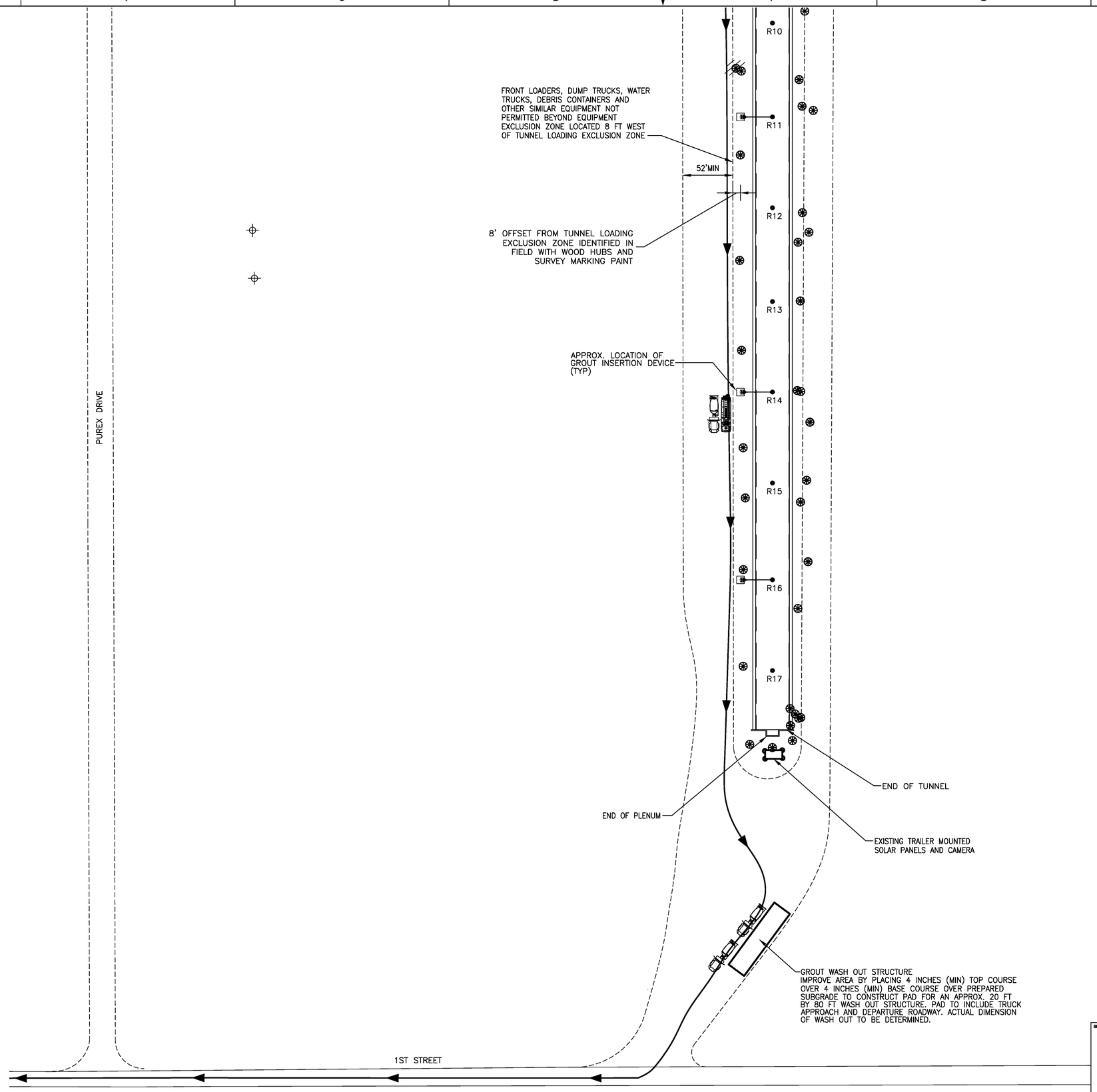

B ENLARGED SITE PLAN
H-2-837313-1 SCALE: 1" = 45'

DWG NUMBER	TITLE
DRAWING TRACEABILITY LIST	

REF NUMBER	TITLE
SEE SHEET 1	
REFERENCES	
NEXT USED ON H-2-837313-1	

REV NO.	DESCRIPTION
0	INITIAL RELEASE PER DCN-PUREX2-003
REVISIONS	

BLDG. NO. 202A 218E15

INDEX NO. 0000 0110

CAUTION NOT COMPLETE WITHOUT CURRENT CHANGE DOCUMENTS FROM DATABASE

ATTENTION DESTROY THIS DOCUMENT BY SHREDDING MAY CONTAIN SENSITIVE INFORMATION

	NAME	DATE	COMPANY
DRAWN BY	J KUMAR		CH2MHC
DRAFTING APPROVAL	RC BRINKLEY		CH2MHC
ENGINEER	BJ HANNA		CH2MHC
DESIGN AUTHORITY	BJ HANNA		CH2MHC

U.S. DEPARTMENT OF ENERGY
Richland Operations Office

PUREX TUNNEL NO. 2
INTERIM STABILIZATION
ENLARGED SITE PLAN

SIZE	DRAWING NUMBER	SHEET	REV
F	H-2-837314	2	0

SCALE SHOWN

PLOTID

DOE_TB_F.DWG (JAN 2012)

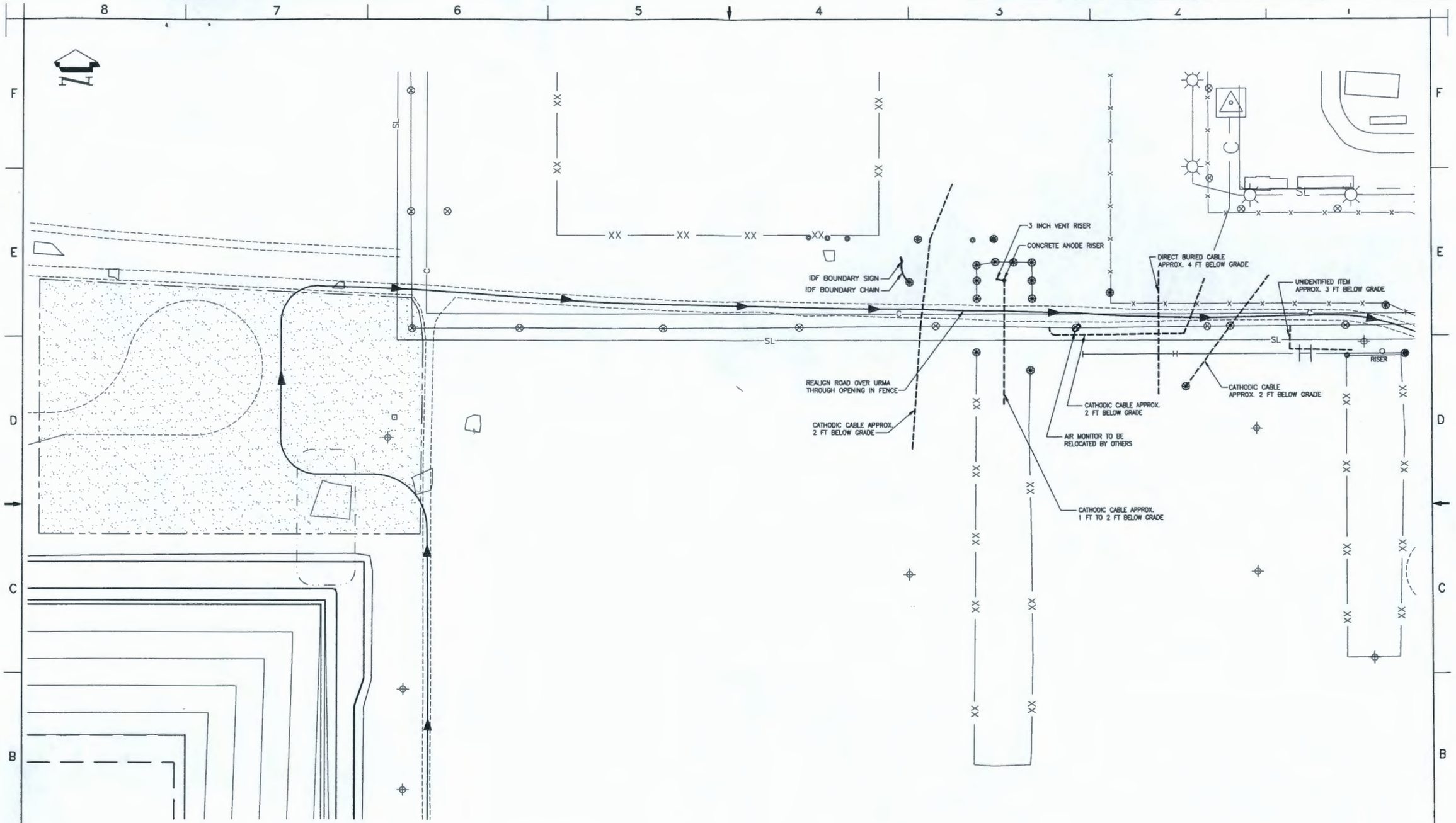

C ENLARGED SITE PLAN
H-2-837313-1 SCALE: 1" = 40'

DWG NUMBER	TITLE
DRAWING TRACEABILITY LIST	

REF NUMBER	TITLE
SEE SHEET 1	
REFERENCES	
NEXT USED ON H-2-837313-1	

REV NO.	DESCRIPTION
0	INITIAL RELEASE PER DCN-PUREX2-003
REVISIONS	

BLDG. NO. 202A 218E15

CAUTION
NOT COMPLETE WITHOUT CURRENT CHANGE DOCUMENTS FROM DATABASE

ATTENTION
DESTROY THIS DOCUMENT BY SHREDDING MAY CONTAIN SENSITIVE INFORMATION

NAME	DATE	COMPANY
J KUMAR		CHPRC
RC BRINKLEY		CHPRC
BJ HANNA		CHPRC

U.S. DEPARTMENT OF ENERGY
Richland Operations Office

PUREX TUNNEL NO. 2
INTERIM STABILIZATION
ENLARGED SITE PLAN

INDEX NO. 0000 0110

DESIGN AUTHORITY BJ HANNA

SIZE F | DRAWING NUMBER H-2-837314 | SHEET 3 | REV 0

SCALE SHOWN

PLOTTED

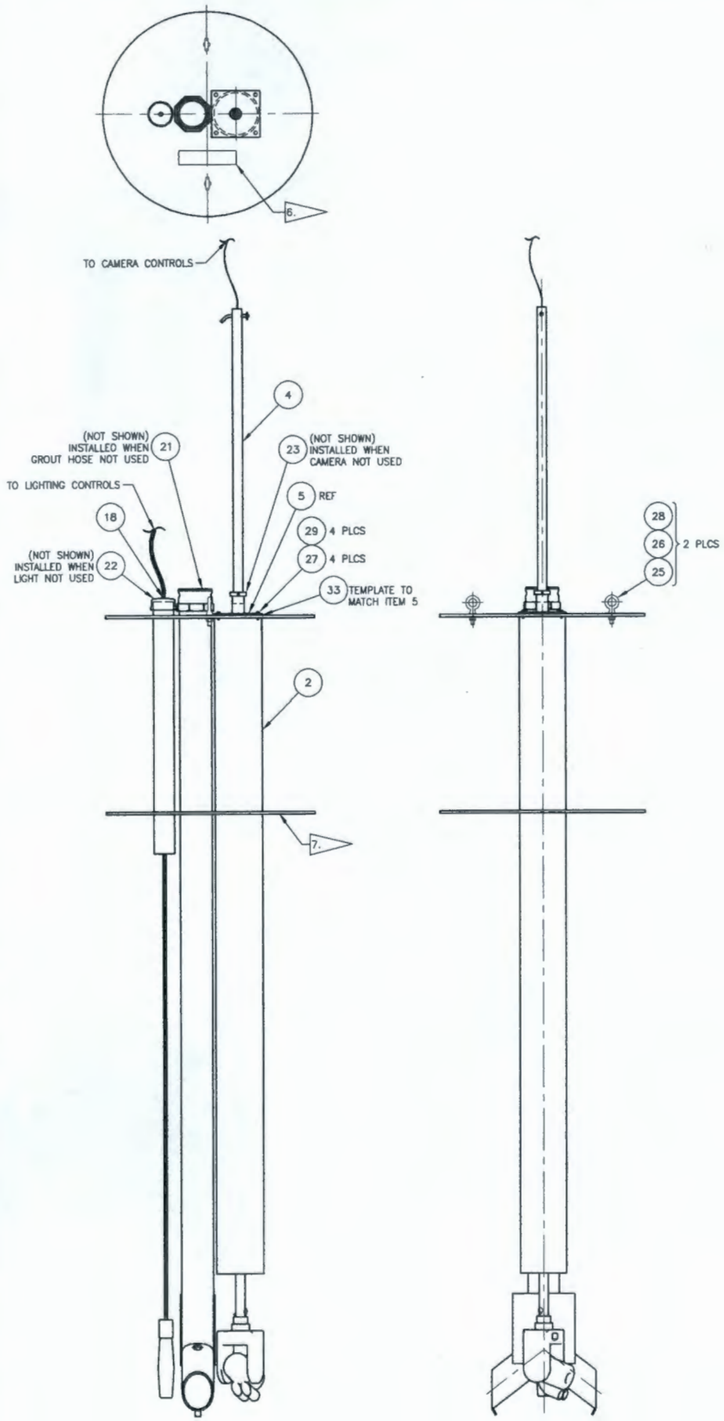

1 GROUT INSERTION DEVICE
SCALE: 1 1/2" = 1'-0"

NOTES: (UNLESS OTHERWISE NOTED)

1. SEE H-2-837312 FOR ABBREVIATIONS, LEGEND, AND GENERAL NOTES.
2. DIMENSIONS AND TOLERANCES SHALL BE PER ANSI/ASME Y14.5-2009. ALL DIMENSIONS ARE IN INCHES. TOLERANCES ARE AS FOLLOWS, UNLESS OTHERWISE NOTED:

   DECIMAL: .X=±.1, .XX=±.03, .XXX=±.010
   FRACTIONAL: ±1/8
   ANGULAR: ±1 DEGREES
   MACHINED RADII: .02 MAXIMUM
3. BREAK ALL SHARP EDGES AND REMOVE ALL BURRS.
4. ALL WELDING AND INSPECTION OF STRUCTURAL STEEL COMPONENTS INCLUDING THE LIFTING BAIL ATTACHMENT TO PIPE SHALL BE IN ACCORDANCE WITH AWS D1.1 FOR CYCLICALLY LOADED STRUCTURES. VT FINAL PASS ON ALL WELDS. USE OF ASME B&PVC SECTION IX PROCEDURES AND QUALIFICATIONS IS ACCEPTABLE.
5. ALL WELDING AND INSPECTION OF PIPING COMPONENTS SHALL BE IN ACCORDANCE WITH ASME B31.3, CATEGORY NORMAL FLUID SERVICE. NO LEAK TEST REQUIRED.

6. AFTER FINAL FABRICATION LABEL ASSEMBLY WITH 1/2" HIGH WHITE CHARACTERS ON A BLACK BACKGROUND. THE USE OF EITHER VINYL SHEET AND LETTERING OR ACRYLIC ENAMEL, ACRYLIC URETHANE, OR AN CHPRC APPROVED ALTERNATE PAINT IS ACCEPTABLE. LABEL INFORMATION SHALL BE AS FOLLOWS:
   DRAWING NUMBER, DASH NUMBER, AND ACTUAL WEIGHT.

7. USE DUCT SEAL COMPOUND BY RECTORSEAL, OR APPROVED EQUAL, AT INSTALLATION IN THE FIELD TO CREATE A SEAL WITH EXISTING TUNNEL RISER.

PARTS LIST/MATERIAL LIST

SC/QL	QTY -040	QTY -040	QTY -030	QTY -020	QTY -010	PARTS / DASH NUMBER	NOMENCLATURE/DESCRIPTION	MATERIAL/REFERENCE	SHEET	ITEM NO
GS/QL3				X	X	-010	GROUT INSERTION DEVICE	(QTY = 3 TOTAL)	1	1
GS/QL3				X	1	-020	INSERTION WELDMENT	(QTY = 3 TOTAL)	2	2
GS/QL3			X	1		-030	GROUT DIVERTER	(QTY = 3 TOTAL)	2	3
GS/QL3		X			1	-040	CAMERA ASSEMBLY	(QTY = 3 TOTAL)	2	4
GS/QL3	X	1				-050	CAMERA GUIDE	(QTY = 3 TOTAL)	2	5
										6
										7
GS/QL3				AR			PLATE, 3/8" THK	ASTM A36		8
GS/QL3	AR						PLATE, 1/4" THK	ASTM A36		9
GS/QL3			AR				PLATE, 3/16" THK	ASTM A36		10
GS/QL3										11
GS/QL3				AR			PIPE, 6", SCH 40	ASTM A53 ANY GR		12
GS/QL3			AR				PIPE, 4", SCH 40	ASTM A53 ANY GR		13
GS/QL3				AR			PIPE, 2 1/2", SCH 40	ASTM A53 ANY GR		14
GS/QL3	AR						PIPE, 1 1/4", SCH 40	ASTM A53 ANY GR		15
GS/QL3		AR					PIPE, 1", SCH 40	ASTM A53 ANY GR		16
GS/QL3										17
GS/QL3					1	H-2-837318-01D	LIGHTING RACK ASSEMBLY			18
GS/QL3		1			1	PTZ140	CAMERA WITH LIGHTS AND CONTROL UNIT	GE SENSING & INSPECTION TECHNOLOGIES		19
GS/QL3				1		400-A-SS	CAMLOCK, 4" MALE x FNPT, TYPE A	DIXON		20
GS/QL3					1	400-DC-SS	DUST CAP, 4" MALE	DIXON		21
GS/QL3					1		CAP, 2 1/2" THD, CL 150	ASME B16.3 CS		22
GS/QL3					1		CAP, 1 1/4" THD, CL 150	ASME B16.3 CS		23
GS/QL3										24
GS/QL3					2	(3014T491)	EYEBOLT, 1/2-13 SHANK, STEEL	(McMASTER-CARR)		25
GS/QL3					2		NUT, HEAVY HEX, 1/2-13UNC-2B	GRADE 8 OR BETTER		26
GS/QL3					4		HEX HD CAP SCREW, 1/4-20UNC-2A x 1"LG	ASTM A193 GR B7		27
GS/QL3					2		WASHER, 1/2" NOMINAL, FLAT	ASTM F436		28
GS/QL3					4		WASHER, 1/4" NOMINAL, FLAT	ANY GRADE CS		29
GS/QL3		1				(9724A616)	CLEVIS PIN, 3/16" DIA, w/COTTER PIN, 1 9/16" USABLE LENGTH, ZINC-PLATED	(McMASTER-CARR)		30
GS/QL3		1				(90146A067)	CLEVIS PIN, 3/8" DIA, w/COTTER PIN, 2 1/2" USABLE LENGTH, ZINC-PLATED	(McMASTER-CARR)		31
GS/QL3		1				(6435K56)	CLAMPING SHAFT COLLAR, FOR 1 5/6" DIA SHAFT, CS	(McMASTER-CARR)		32
GS/QL3					AR		EPDM RUBBER SHEET, 1/8" THK, DUROMETER 60A	ASTM D2000 BA		33

DWG NUMBER	TITLE
H-2-837312	PUREX TUNNEL NO. 2 DWG LIST, NOTES, & LEGEND

DRAWING TRACEABILITY LIST

REF NUMBER	TITLE
NEXT USED ON H-2-837313-1	

REFERENCES

REV NO	DESCRIPTION
0	RELEASED PER DCN-PUREX2-004

REVISIONS

BLDG. NO. 202A 218E15

PROJ. NO. 9901

CAUTION
NOT COMPLETE WITHOUT CURRENT CHANGE DOCUMENTS FROM DATABASE

ATTENTION
DESTROY THIS DOCUMENT BY SHREDDING MAY CONTAIN SENSITIVE INFORMATION

	NAME	DATE	COMPANY
DRAWN BY	RC BRINKLEY		CHPRC
DESIGN ENGINEER	J KUMAR		CHPRC
CHECKED BY	KJ LEIST		CHPRC
DESIGN AUTHORITY	KJ LEIST		CHPRC

U.S. DEPARTMENT OF ENERGY
Richland Operations Office

PUREX TUNNEL NO. 2
INTERIM STABILIZATION
GROUT INSERTION DEVICE

SIZE F | DRAWING NUMBER H-2-837316 | SHEET 1 | REV 0

SCALE SHOWN

PLOT10

DOE_SSL_F.DWG (JAN 2010)

NOTE:
1. FOR NOTES AND PARTS/MATERIAL LIST SEE SHEET 1.

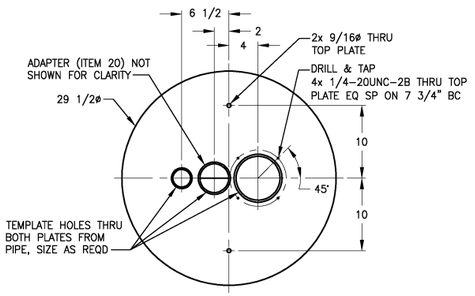

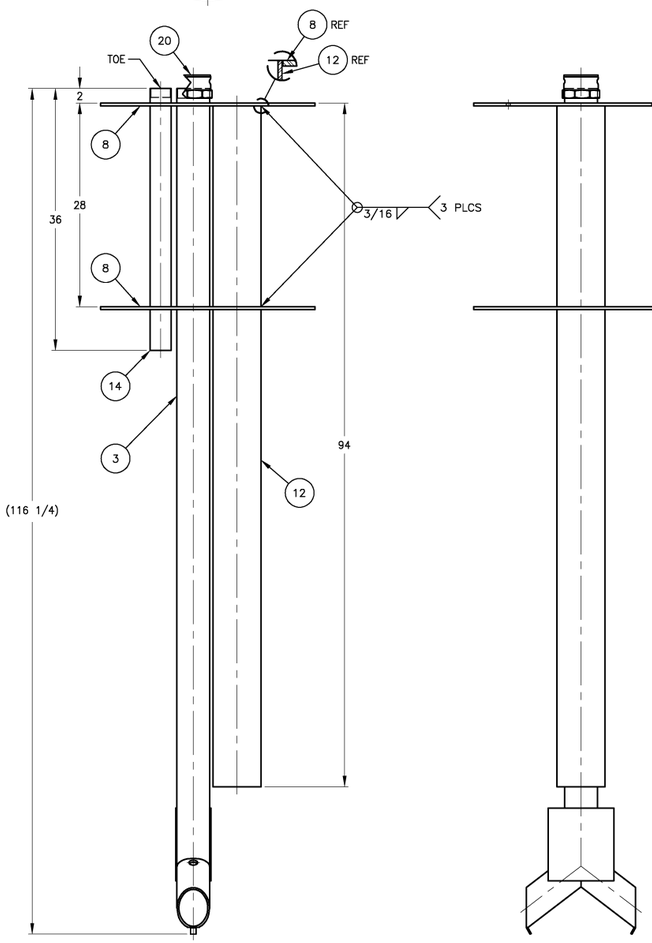

2 INSERTION WELDMENT
SCALE: 1 1/2" = 1'-0"

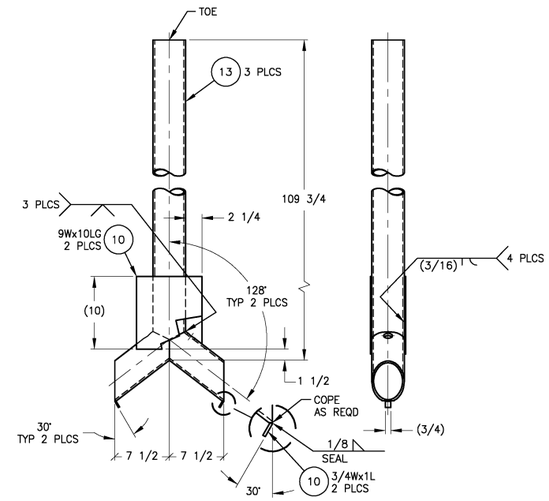

3 GROUT DIVERTER
SCALE: 1 1/2" = 1'-0"

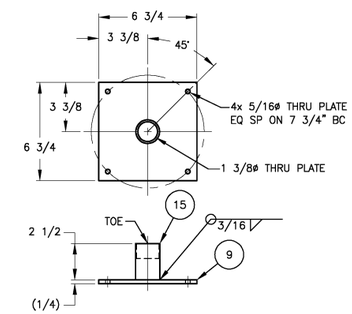

5 CAMERA GUIDE
SCALE: 3" = 1'-0"

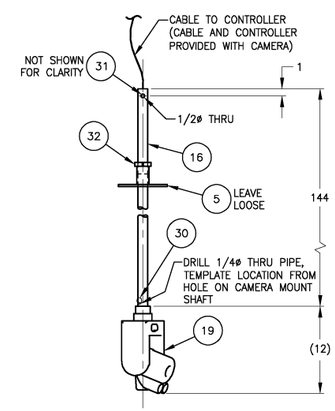

4 CAMERA ASSEMBLY
SCALE: 1 1/2" = 1'-0"

DWG NUMBER	TITLE
DRAWING TRACEABILITY LIST	

REF NUMBER	TITLE
SEE SHEET 1	
REFERENCES	
NEXT USED ON SHEET 1	

REV NO.	DESCRIPTION
0	RELEASED PER DCN-PUREX2-004
REVISIONS	

BLDG. NO. 202A 218E15

INDEX NO. 9901

CAUTION
NOT COMPLETE WITHOUT CURRENT CHANGE DOCUMENTS FROM DATABASE

ATTENTION
DESTROY THIS DOCUMENT BY SHREDDING MAY CONTAIN SENSITIVE INFORMATION

	NAME	DATE	COMPANY
DRAWN BY	RC BRINKLEY		CHPRC
REVIEWED BY (TECHNICAL)	J KUMAR		CHPRC
APPROVED	KJ LEIST		CHPRC
DESIGN AUTHORITY	KJ LEIST		CHPRC

U.S. DEPARTMENT OF ENERGY
Richland Operations Office

PUREX TUNNEL NO. 2
INTERIM STABILIZATION
GROUT INSERTION DEVICE

SIZE	DRAWING NUMBER	SHEET	REV
F	H-2-837316	2	0

SCALE SHOWN

PLOTID

DOE_TB_F.DWG (JAN 2012)

NOTES: (UNLESS OTHERWISE NOTED)

1. SEE H-2-837312 FOR ABBREVIATIONS, LEGEND, AND GENERAL NOTES.
2. DIMENSIONS AND TOLERANCES SHALL BE PER ANSI/ASME Y14.5-2009. ALL DIMENSIONS ARE IN INCHES. TOLERANCES ARE AS FOLLOWS, UNLESS OTHERWISE NOTED:

   DECIMAL: .X=±.1, .XX=±.03, .XXX=±.010
   FRACTIONAL: ±1/8
   ANGULAR: ±1 DEGREES
   MACHINED RADII: .02 MAXIMUM
3. BREAK ALL SHARP EDGES AND REMOVE ALL BURRS.
4. ALL WELDING AND INSPECTION OF STRUCTURAL STEEL COMPONENTS INCLUDING THE LIFTING POINTS SHALL BE IN ACCORDANCE WITH AWS D14.1 FOR CYCLICALLY LOADED STRUCTURES. VT FINAL PASS ON ALL WELDS. USE OF ASME B&PVC SECTION IX PROCEDURES AND QUALIFICATIONS IS ACCEPTABLE.
5. ALL WELDING AND INSPECTION OF PIPING COMPONENTS SHALL BE IN ACCORDANCE WITH ASME B31.3, CATEGORY NORMAL FLUID SERVICE. DESIGN PRESSURE IS 150 PSI. NO LEAK TEST REQUIRED.
6. AFTER FINAL FABRICATION LABEL ASSEMBLY WITH 1/2" HIGH WHITE CHARACTERS ON A BLACK BACKGROUND. THE USE OF EITHER VINYL SHEET AND LETTERING OR ACRYLIC ENAMEL, ACRYLIC URETHANE, OR AN CHPRC APPROVED ALTERNATE PAINT IS ACCEPTABLE. LABEL INFORMATION SHALL BE AS FOLLOWS:
   DRAWING NUMBER, DASH NUMBER, AND ACTUAL WEIGHT (ESTIMATED WEIGHT IS 4,600 LB).
7. PERFORM MT ON COMPLETED LUG WELDS PER AWS D14.1.

PARTS LIST/MATERIAL LIST

SC/QL	QTY -080	-050	-040	-030	-020	-010	PARTS / DASH NUMBER	NOMENCLATURE/DESCRIPTION	MATERIAL/REFERENCE	SHEET	ITEM NO
GS/QL3				2			1039655	OPEN SPELTER SOCKET, FOR 1/2" WIRE ROPE, WITH CLEVIS PIN	CROSBY GROUP		55
GS/QL3				1				BOLT, HEX HD, 3/8-16UNC-2A x 6 1/2"LG	ASTM A193 GR B7		56
GS/QL3				1				NUT, HEX, 3/8-16UNC-2B	ASTM A194 GR 7		57
GS/QL3						1	(3054T43)	RATCHET PULLER WITH WIRE ROPE, 3,000 LB CAP	(McMASTER-CARR)		58
GS/QL3						1	1031993	TURNBUCKLE, JAW-TO-EYE, 3,500 LB CAP, HG-227, 6" TAKE UP, STL	CROSBY		59
GS/QL3						1	(3494T15)	WIRE ROPE THIMBLE, 3/8", STL	(McMASTER-CARR)		60
GS/QL3						2	(3465T15)	WIRE ROPE SADDLE, 3/8", STL	(McMASTER-CARR)		61
GS/QL3						AR	(3440T18)	3/8" DIA WIRE ROPE, 6x19 FIBER CORE	(McMASTER-CARR)		62
GS/QL3						2	1018099	SHACKLE, 1/2", G-213, 2 TON LIMIT	CROSBY		63

PARTS LIST/MATERIAL LIST

SC/QL	QTY -080	-050	-040	-030	-020	-010	PARTS / DASH NUMBER	NOMENCLATURE/DESCRIPTION	MATERIAL/REFERENCE	SHEET	ITEM NO
GS/QL3							-010	GROUT INSERTION BOOM	(QTY = 1 TOTAL)	1	1
GS/QL3						1	-020	BASE ASSEMBLY	(QTY = 1 TOTAL)	2	2
GS/QL3						1	-030	BOOM ASSEMBLY	(QTY = 1 TOTAL)	3	3
GS/QL3						1	-040	REAR CROSS TIE	(QTY = 1 TOTAL)	1	4
GS/QL3				1			-050	CABLE GUIDE	(QTY = 1 TOTAL)	3	5
GS/QL3						1	-060	HOSE ASSEMBLY	(QTY = 1 TOTAL)	1	6
											7
											8
GS/QL3						AR	-001	COUNTERWEIGHT - TYPE 1, THK AS REQD	ASTM A36	1	9
GS/QL3						AR	-002	COUNTERWEIGHT - TYPE 2, THK AS REQD	ASTM A36	1	10
GS/QL3						AR	-003	COUNTERWEIGHT - TYPE 3, THK AS REQD	ASTM A36	1	11
GS/QL3						2	-004	WEIGHT CLIP, L4 x 3 x 3/16	ASTM A36	1	12
GS/QL3				2			-005	SPELTER PLATE, 1/2" THK	ASTM A36	3	13
GS/QL3				1			-006	TURNBUCKLE PLATE, 1/2" THK	ASTM A36	3	14
GS/QL3				1	1		-007	POSITION PLATE, 1/2" THK	ASTM A36	3	15
GS/QL3				3			-008	4" U-BOLT, 1/2" DIA	ASTM A36	3	16
											17
GS/QL3				AR				WB x 10	ASTM A992		18
GS/QL3					AR			HSS 7 x 3 x 1/4	ASTM A500 GR B		19
GS/QL3			AR		AR			HSS 2 x 2 x 1/4	ASTM A500 GR B		20
GS/QL3					AR			C12 x 20.7	ASTM A572 GR 50		21
GS/QL3					AR			C7 x 9.8	ASTM A572 GR 50		22
GS/QL3					AR			C5 x 6.7	ASTM A572 GR 50		23
GS/QL3					AR			C4 x 5.4	ASTM A572 GR 50		24
GS/QL3				AR				C3 x 4.1	ASTM A572 GR 50		25
											26
GS/QL3						AR		ROUND BAR, 3/4" DIA	ASTM A36		27
GS/QL3				AR				PLATE, 3/4" THK	ASTM A36		28
GS/QL3		AR	AR	AR				PLATE, 1/2" THK	ASTM A36		29
GS/QL3					AR			PLATE OR FLATEBAR, 3/8" THK	ASTM A36		30
GS/QL3				AR				PIPE, 4", SCH 40	ASTM A53 GR B		31
GS/QL3					AR			PIPE, 1 1/4", SCH 40	ASTM A53 GR B		32
GS/QL3						AR		PIPE, 1", SCH 40	ASTM A53 GR B		33
											34
GS/QL3				12				NUT, HEX, 1/2-13UNC-2B	ASTM A194 GR 7		35
GS/QL3				8				BOLT, HEX HD, 3/8-16UNC-2A x 1 1/4"LG	ASTM A193 GR B7		36
GS/QL3						4		BOLT, HEX HD, 3/8-16UNC-2A x 1"LG	ASTM A193 GR B7		37
GS/QL3						4		BOLT, HEX HD, 3/8-16UNC-2A x 1/2"LG	ASTM A193 GR B7		38
GS/QL3				10		8		WASHER, 3/8" NOMINAL, FLAT	ANY GRADE CS		39
GS/QL3						2		WASHER, 3/4" NOMINAL, FLAT	ANY GRADE CS		40
GS/QL3						2		COTTER PIN, 1/16" DIA (MIN) x 1 1/4"LG	ANY GRADE CS		41
GS/QL3					AR			TRACTION FLOOR PLATE, 1/4" THK	ANY GRADE CS		42
GS/QL3	1						H40LF100DIA	TIP HOSE, 4", HEVI-DUTY END	CON FORMS		43
GS/QL3						3	C40SDL	SNAP COUPLING, 4" HEVI-DUTY	CON FORMS OR EQUAL		44
GS/QL3				2			WE40D125C	WELD END, 4" HEVI-DUTY x BW	CON FORMS OR EQUAL		45
GS/QL3						1	PB409018D	PLACING ELBOW, 4" HEVI-DUTY, 90°	CON FORMS OR EQUAL		46
GS/QL3						1		HAMMER VALVE, 4" HEVI-DUTY	CON FORMS OR EQUAL		47
GS/QL3				1				NUT, HEX, 3/8-6UNC-2B	ASTM A194 GR 7		48
GS/QL3	1						(53015K168)	COUPLING, CAM & GROOVE, 4" BARB	(McMASTER-CARR)		49
GS/QL3				1			1032055	TURNBUCKLE, JAW-TO-EYE, 5,200 LB CAP, HG-227, 6" TAKE UP, STL	CROSBY		50
GS/QL3				1			(3494T16)	WIRE ROPE THIMBLE, 1/2", STL	(McMASTER-CARR)		51
GS/QL3				2			(3465T17)	WIRE ROPE SADDLE, 1/2", STL	(McMASTER-CARR)		52
GS/QL3				AR			(3440T21)	1/2" DIA WIRE ROPE, 6x19 FIBER CORE	(McMASTER-CARR)		53
GS/QL3	2							WORM DRIVE HOSE CLAMP OR BANDING CLAMP, SIZE AS REQUIRED	ANY 300 SERIES SST		54

4 REAR CROSS TIE
SCALE: 3" = 1'-0"

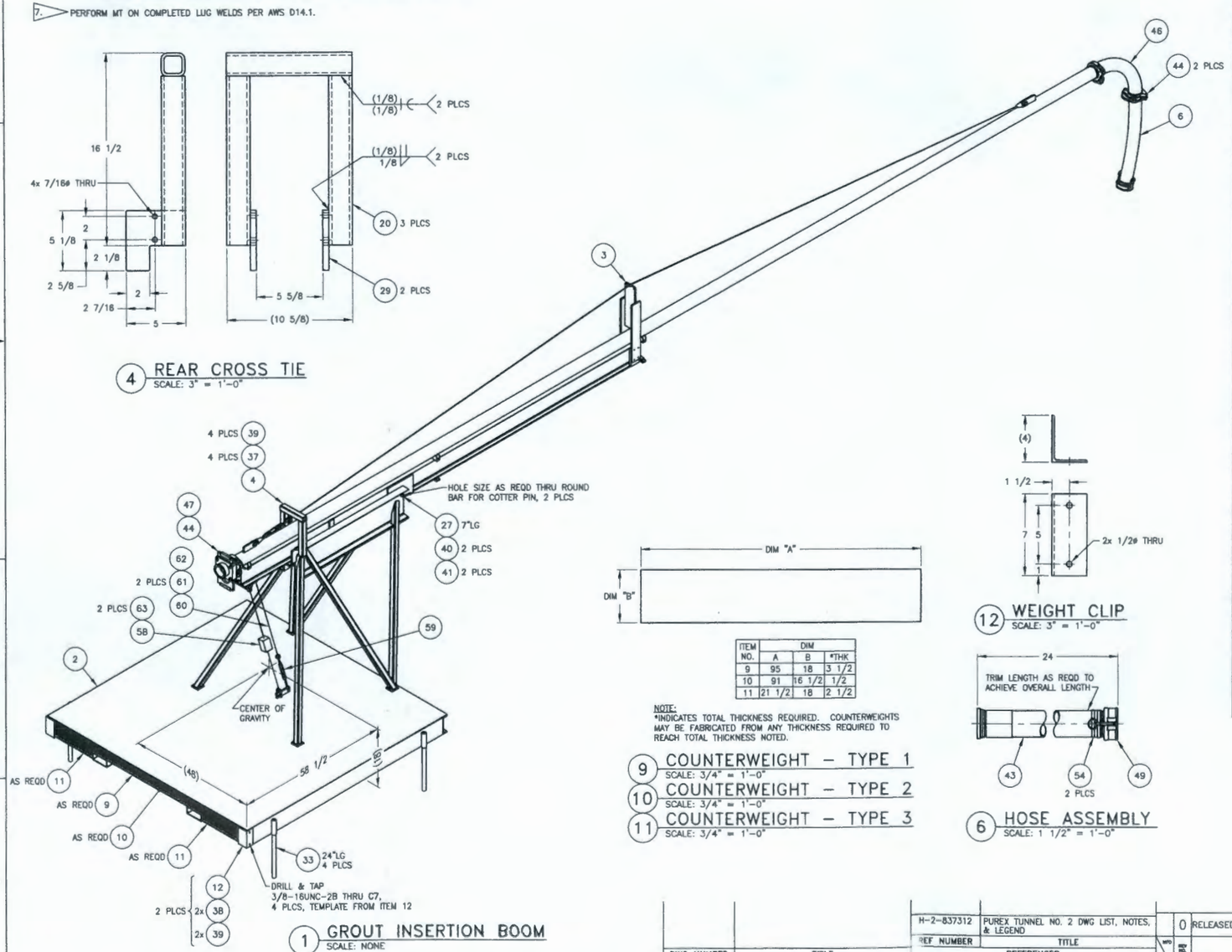

1 GROUT INSERTION BOOM
SCALE: NONE

ITEM NO.	DIM A	DIM B	*THK
9	95	18	3 1/2
10	91	16 1/2	1/2
11	21 1/2	18	2 1/2

NOTE:
*INDICATES TOTAL THICKNESS REQUIRED. COUNTERWEIGHTS MAY BE FABRICATED FROM ANY THICKNESS REQUIRED TO REACH TOTAL THICKNESS NOTED.

9 COUNTERWEIGHT - TYPE 1
SCALE: 3/4" = 1'-0"

10 COUNTERWEIGHT - TYPE 2
SCALE: 3/4" = 1'-0"

11 COUNTERWEIGHT - TYPE 3
SCALE: 3/4" = 1'-0"

12 WEIGHT CLIP
SCALE: 3" = 1'-0"

6 HOSE ASSEMBLY
SCALE: 1 1/2" = 1'-0"

DWG NUMBER	TITLE
DRAWING TRACEABILITY LIST	

REF NUMBER	TITLE
H-2-837312	PUREX TUNNEL NO. 2 DWG LIST, NOTES, & LEGEND
REFERENCES	
NEXT USED ON H-2-837313-1	

REV NO.	DESCRIPTION
0	RELEASED PER DCN-PUREX2-004
REVISIONS	

BLDG. NO. 202A 218E15

CAUTION
NOT COMPLETE WITHOUT CURRENT CHANGE DOCUMENTS FROM DATABASE

ATTENTION
DESTROY THIS DOCUMENT BY SHREDDING MAY CONTAIN SENSITIVE INFORMATION

	NAME	DATE
DRAWN BY	RC BRINKLEY	
DESIGN ENGINEER	J KUMAR	
DESIGN AUTHORITY	KJ LEIST	
CHPRC		

INDEX NO. 9901

DESIGN AUTHORITY KJ LEIST

U.S. DEPARTMENT OF ENERGY
Richland Operations Office

PUREX TUNNEL NO. 2
INTERIM STABILIZATION
GROUT INSERTION EXT BOOM

SIZE F | DRAWING NUMBER H-2-837317 | SHEET 1 | REV 0

SCALE SHOWN

PLOTID

DOE_TL_F.DWG (JAN 2012)

NOTE:
1. FOR NOTES AND PARTS/MATERIAL LIST SEE SHEET 1.

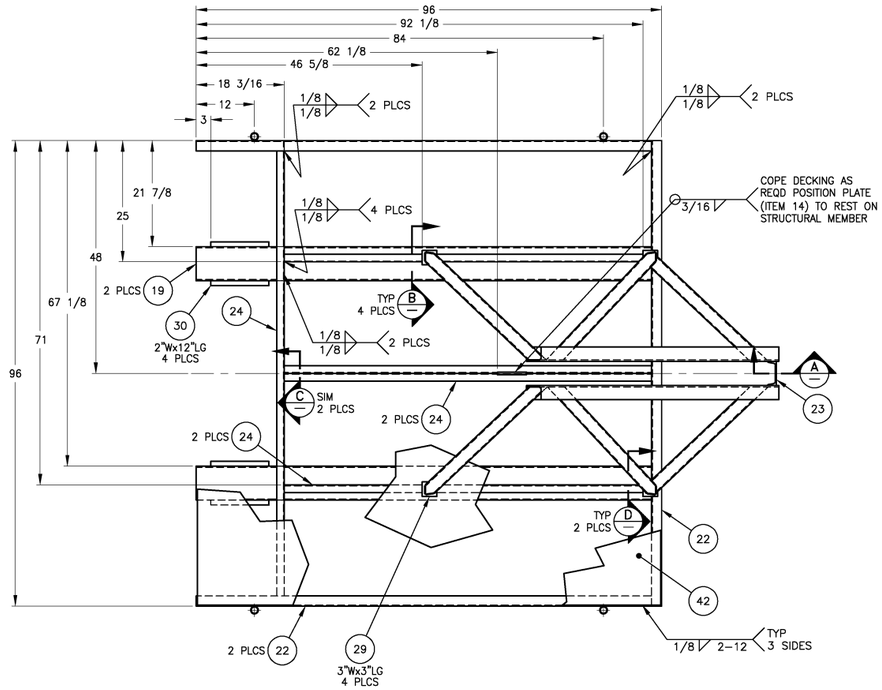

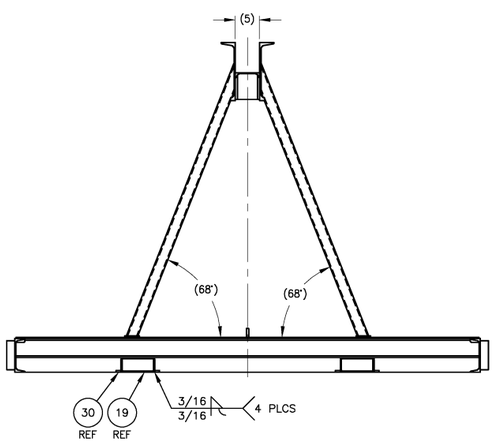

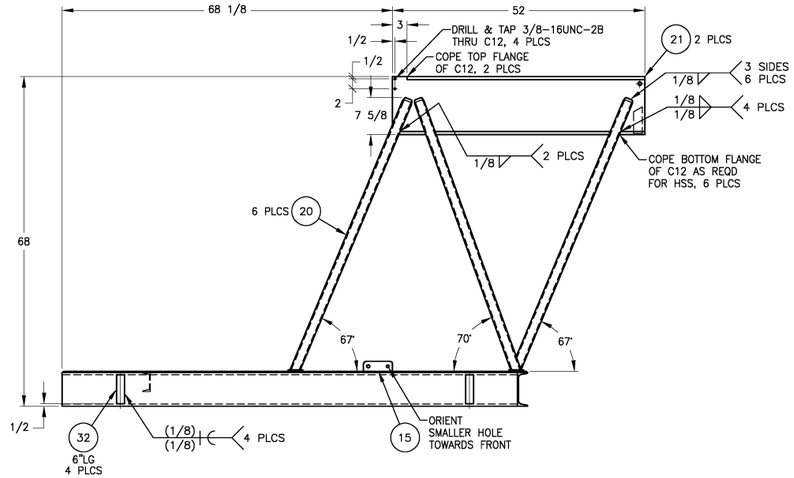

2 BASE ASSEMBLY
SCALE: 1" = 1'-0"

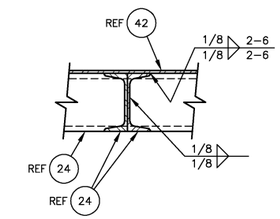

C SECTION
SCALE: 3" = 1'-0"

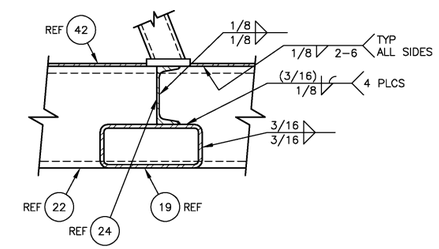

D SECTION
SCALE: 3" = 1'-0"

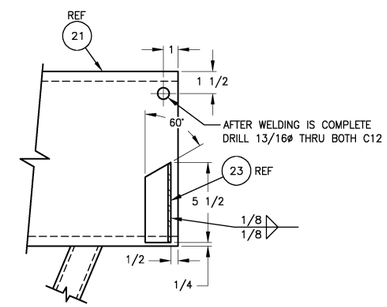

A SECTION
SCALE: 3" = 1'-0"

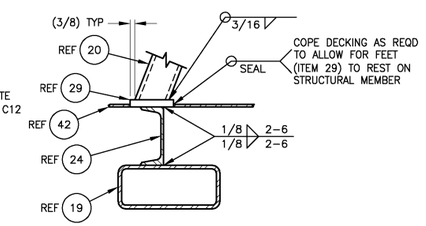

B SECTION
SCALE: 3" = 1'-0"

DWG NUMBER	TITLE
DRAWING TRACEABILITY LIST	

REF NUMBER	TITLE
SEE SHEET 1	
REFERENCES	
NEXT USED ON SHEET 1	

REV NO.	DESCRIPTION
0	RELEASED PER DCN-PUREX2-004
REVISIONS	

BLDG. NO. 202A 218E15

INDEX NO. 9901

CAUTION
NOT COMPLETE WITHOUT CURRENT CHANGE DOCUMENTS FROM DATABASE

ATTENTION
DESTROY THIS DOCUMENT BY SHREDDING MAY CONTAIN SENSITIVE INFORMATION

	NAME	DATE	COMPANY
DRAWN BY	RC BRINKLEY		CHPRC
DRAFTING APPROVAL	J KUMAR		CHPRC
ENGINEER	KJ LEIST		CHPRC
DESIGN AUTHORITY	KJ LEIST		CHPRC

U.S. DEPARTMENT OF ENERGY
Richland Operations Office

PUREX TUNNEL NO. 2
INTERIM STABILIZATION
GROUT INSERTION EXT BOOM

SIZE F | DRAWING NUMBER H-2-837317 | SHEET 2 | REV 0

SCALE SHOWN

PLOTID

DOE_TB_F.DWG (JAN 2012)

NOTE:
1. FOR NOTES AND PARTS/MATERIAL LIST SEE SHEET 1.

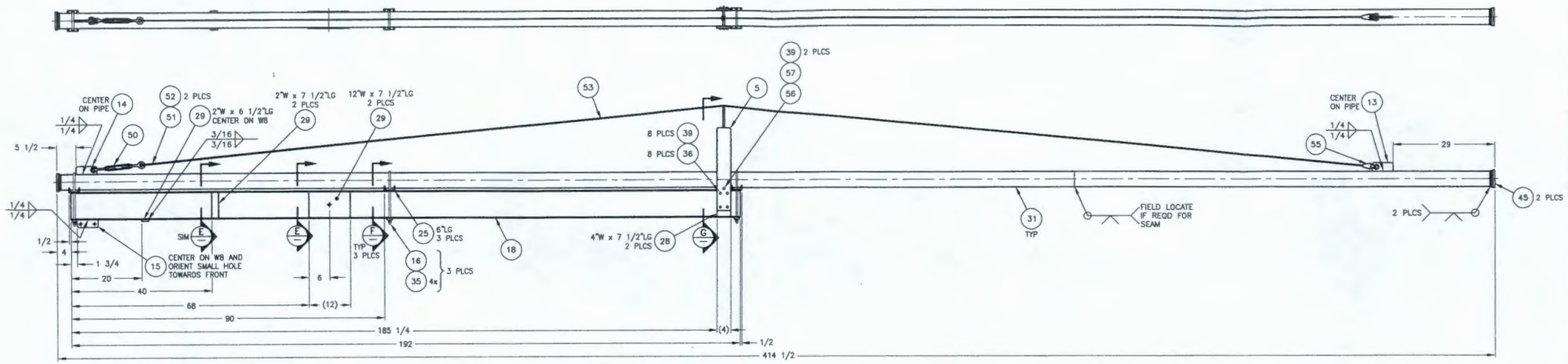

3 BOOM ASSEMBLY
SCALE: 1" = 1'-0"

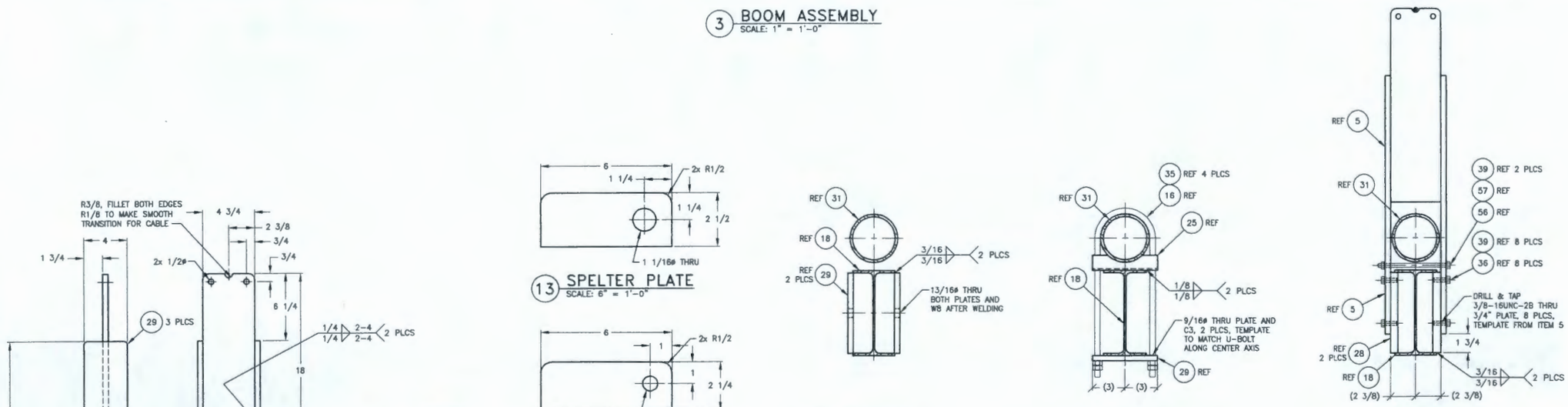

5 CABLE GUIDE
SCALE: 3" = 1'-0"

16 4" U-BOLT
SCALE: 3" = 1'-0"

13 SPELTER PLATE
SCALE: 6" = 1'-0"

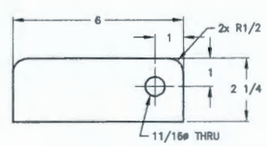

14 TURNBUCKLE PLATE
SCALE: 6" = 1'-0"

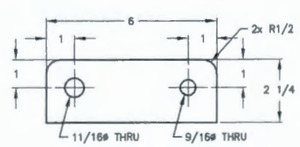

15 POSITION PLATE
SCALE: 6" = 1'-0"

E SECTION
SCALE: 3" = 1'-0"

F SECTION
SCALE: 3" = 1'-0"

G SECTION
SCALE: 3" = 1'-0"

DWG NUMBER	TITLE
DRAWING TRACEABILITY LIST	

REF NUMBER	TITLE
SEE SHEET 1	
REFERENCES	
NEXT USED ON SHEET 1	

REV NO.	DESCRIPTION
0	RELEASED PER DCN-PUREX2-004
REVISIONS	

BLDG. NO. 202A 218E15

CAUTION
NOT COMPLETE WITHOUT CURRENT CHANGE DOCUMENTS FROM DATABASE

ATTENTION
DESTROY THIS DOCUMENT BY SHREDDING MAY CONTAIN SENSITIVE INFORMATION

NAME	DATE	CONTRACT
DRAWN BY RC BRINKLEY		CHKD
DESIGN APPROVAL J KUMAR		CHKD
DRAWN BY KJ LEIST		CHKD

U.S. DEPARTMENT OF ENERGY
Richland Operations Office

PUREX TUNNEL NO. 2
INTERIM STABILIZATION
GROUT INSERTION EXT BOOM

INDEX NO. 9901

DESIGN AUTHORITY KJ LEIST

SIZE F | DRAWING NUMBER H-2-837317 | SHEET 3 | REV 0

SCALE SHOWN

PLOTID

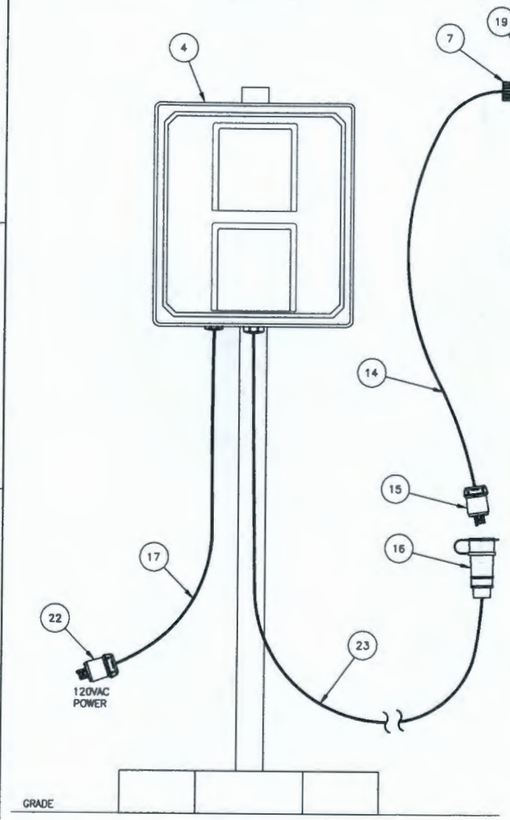

FRONT VIEW

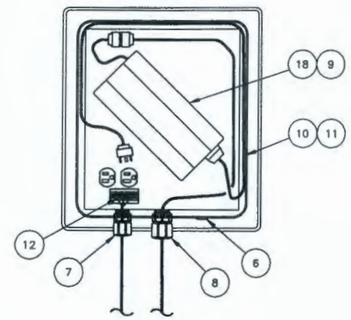

PANEL LAYOUT

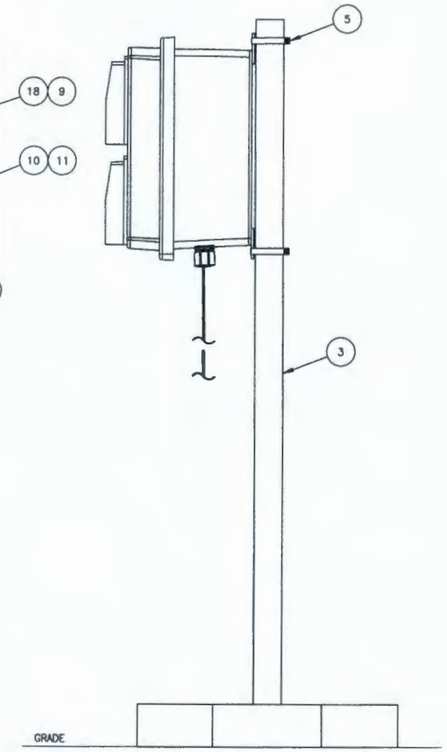

SIDE VIEW

1 LIGHTING RACK ASSEMBLY

SCALE: 3" = 1'-0"

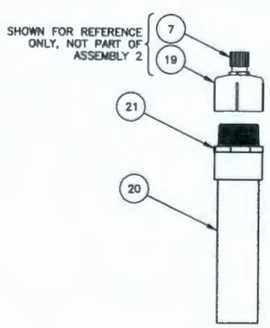

2 3" RISER LIGHTING ADAPTER

SCALE: 3" = 1'-0"

PARTS LIST/MATERIAL LIST

SC/QL	QTY -020	QTY -010	PARTS / DASH NUMBER	NOMENCLATURE/DESCRIPTION	MATERIAL/REFERENCE	SHEET	ITEM NO
GS/QL3		X	-010	LIGHTING RACK ASSEMBLY			1
GS/QL3	X		-020	3" RISER LIGHTING ADAPTER			2
GS/QL3		1	SKUTCSB304	SIGN BASE, RECYCLED RUBBER OCTAGON BASE AND POST SYSTEM, SMALL BASE WITH 4' HIGH 1.5" ID PVC POST.	GLOBAL INDUSTRIES		3
GS/QL3		1	NF141208VFA1	ALTELIX 14x12x8 INCH NEMA ENCLOSURE, 120VAC WITH COOLING FAN	ALTELIX		4
GS/QL3		1	NMK-0006	POLE MOUNT/FLANGE MOUNT KIT FOR ITEM 4	ALTELIX		5
GS/QL3		1	AS050	HOLE SEAL, 1/2"	HOFFMAN		6
GS/QL3		2	LPCG754	CORD CONNECTOR, LOW-PROFILE, STRAIN RELIEF, 3/4"	ARLINGTON		7
GS/QL3		1	LPCG757	CORD CONNECTOR, LOW-PROFILE, STRAIN RELIEF, 3/4"	ARLINGTON		8
GS/QL3		4		MACHINE SCREW, 8-32UNC X 3/4" LONG	ANY GRADE STEEL		9
GS/QL3		4	PM2H25-C	PUSH BARB CABLE TIE MOUNT, NYLON	PANDUIT		10
GS/QL3		6	PLT1-5S-C	CABLE TIE, NYLON	PANDUIT		11
GS/QL3		3	3KG45	TERMINAL FORK, NYLON, WIRE SIZE 18-14 AWG	STA-KON		12
GS/QL3		1	8144K12	BULB, HIGH PRESSURE SODIUM, 400W, LARGE MOGUL BASE, SHATTER RESISTANT	PHILLIPS		13
GS/QL3		1	903064	LAMP CORD, 15 FT, WITH MOGUL BASE SOCKET	SUNLIGHT SUPPLY		14
GS/QL3		1	HBL24W47	PLUG, ELASTOGRIP, 15A, 125V, 2 POLE, 3 WIRE GROUNDING, NEMA L5-15P MALE	HUBBELL		15
GS/QL3		1	HBL25W47	PLUG, ELASTOGRIP, 15A, 125V, 2 POLE, 3 WIRE GROUNDING, NEMA L5-15P FEMALE	HUBBELL		16
GS/QL3		1	10314500	CABLE, 50 FT, 14 AWG, 3 CONDUCTOR, TYPE SJTW	CENTURY WIRE & CABLE		17
GS/QL3		1	SPL-BALLAST-FAN400W	BALLAST, ELECTRONIC, 400W CAPACITY	SUN POWER LIGHTING		18
GS/QL3		1	(4880K808)	PVC CAP, 2 1/2" NPT, SCH 40, FEMALE WITH TRADE SIZE 3/4" HOLE CUT IN CENTER	(McMASTER-CARR)		19
GS/QL3	1			PIPE, 2 1/2", SCH 40, 12" LONG	COMMERCIAL PVC		20
GS/QL3	1		(4880K163)	PVC ADAPTER WITH HEX BODY, 2 1/2" NPT MALE	(McMASTER-CARR)		21
GS/QL3		1	14W47	PLUG, STRAIGHT BLADE, 15A, 125V, NEMA 5-15P	LEVITON		22
GS/QL3		1	STK-EXT-50	CORD, DIGITAL LAMP EXTENSION, 50 FT, 14 AWG, SUN SYSTEM COMPATIBLE PLUG	SOLISTEK		23

NOTES:

1. POSITION ENCLOSURE ON SIGN BASE AT A CONVENIENT AND STABLE HEIGHT.

DWG NUMBER	TITLE
DRAWING TRACEABILITY LIST	

REF NUMBER	TITLE
H-2-837312	PUREX TUNNEL NO. 2 DWG LIST, NOTES, & LEGEND
REFERENCES	
NEXT USED ON H-2-837313-1	

REV NO	DESCRIPTION
0	RELEASED PER DCN-PUREX2-005
REVISIONS	

BLDG. NO. 202A 218E15

INDEX NO. 7401

CAUTION NOT COMPLETE WITHOUT CURRENT CHANGE DOCUMENTS FROM DATABASE

ATTENTION DESTROY THIS DOCUMENT BY SHREDDING MAY CONTAIN SENSITIVE INFORMATION

NAME	OFFICE/DISCIPLINE	COMPANY
N KUMAR		
RG BRINKLEY		
SH CROW		
DESIGN AUTHORITY SH CROW		

U.S. DEPARTMENT OF ENERGY
Richland Operations Office

PUREX TUNNEL NO. 2
INTERIM STABILIZATION
LIGHTING RACK ASSEMBLY

SIZE F | DRAWING NUMBER H-2-837318 | SHEET 1 | REV 0

SCALE SHOWN

PLOTTED