Hanford Facility RCRA Permit Change Notice

Part III, Operating Unit Group 3

Liquid Effluent Retention Facility & 200 Area Effluent Treatment Facility

Index

Page	Permit Section
Page 2 of 3:	Part III, Operating Unit Group 3, Permit Conditions
Page 3 of 3:	Addendum C, Process Information

Submitted by WRPS Co-Operator:

Jeremy T. Hartley — 6/23/20 Date

Reviewed by DOE-ORP Program Office:

Brian A. Harkins Digitally signed by Brian A. Harkins Date: 2020.06.23 14:03:58 -07'00'

Rob G. Hastings — Date

Hanford Facility RCRA Permit Change Notice

Unit:	Permit Part
Liquid Effluent Retention Facility & 200 Area Effluent Treatment Facility	**Part III, Operating Unit Group 3**

Description of Modification:

Part III, Operating Unit Group 3 Permit Conditions:

Update the following List of Addenda Specific to Operating Unit Group 3 with modification approval date:

Addendum C Process Information, dated TBD ~~May 19, 2020~~

WAC 173-303-830 Modification Class	Class 1	Class 1	Class 2	Class 3
Please mark the Modification Class:		X		

Enter relevant WAC 173-303-830, Appendix I Modification citation number: WAC 173-303-830(4)(d)(i)

Enter wording of WAC 173-303-830, Appendix I Modification citation: Request modification be reviewed and approved as a Class 1 prime modification.

Modification Concurrence: [X] Yes [ ] No (state reason)

Reason for Non-concurrence:

Reviewed by Ecology:

Schleif, Stephanie (ECY) Digitally signed by Schleif, Stephanie (ECY) Date: 2020.06.25 13:31:52 -07'00'

Stephanie Schleif Date

Hanford Facility RCRA Permit Change Notice

Unit:	Permit Part
Liquid Effluent Retention Facility & 200 Area Effluent Treatment Facility	**Part III, Operating Unit Group 3**

Description of Modification:

Addendum C, Process Information:

Modifications pertain to:

- Section C.2.4, Concentrate Staging: Updated text to reflect each concentrate tank has a pair of heat exchangers, rather than one. Reference supporting information drawing H-2-88988, Sheet 2.
- Section C.4.1, Design Requirements: Updated hydrogen peroxide decomposer vessels material of construction to 316 stainless steel.
- Table C-8, Peroxide Decomposer, H2O2 Decomposers (2) updated material of construction for 60D-CO-1A/-1B to 316 stainless steel.
- Table C-8, Concentrate Tanks, updated number of Concentrate heat exchangers to four and updated corresponding equipment ID numbers:

WAC 173-303-830 Modification Class	Class 1	Class '1	Class 2	Class 3
Please mark the Modification Class:		X		

Enter relevant WAC 173-303-830, Appendix I Modification citation number: WAC 173-303-830(4)(d)(i)

Enter wording of WAC 173-303-830, Appendix I Modification citation: Request modification be reviewed and approved as a Class 1 prime modification.

Modification Approved: [X] Yes [ ] No (state reason)

Reason for Non-concurrence: Approved with Ecology's Changes (See Table C-8)

Reviewed by Ecology:

Schleif, Stephanie (ECY) Digitally signed by Schleif, Stephanie (ECY) Date: 2020.06.25 13:32:24 -07'00'

Stephanie Schleif Date

Replace the Following:

- Part III, LERF and 200 Area ETF Permit Conditions
- Addendum C, Process Information

Supporting Information

- H-2-88988-2, Rev. 1, Concentrate Receiving Sys Heat Exchanger

PART III, OPERATING UNIT GROUP 3 PERMIT CONDITIONS LIQUID EFFLUENT RETENTION FACILITY & 200 AREA EFFLUENT TREATMENT FACILITY

UNIT DESCRIPTION

The Liquid Effluent Retention Facility (LERF) and 200 Area Effluent Treatment Facility (200 Area ETF) consists of an aqueous waste treatment system that provides treatment, storage integral to the treatment process, and storage of secondary wastes from the treatment process for a variety of aqueous mixed waste. The 200 Area ETF is located in the 200 East Area. Aqueous wastes managed by the 200 Area ETF include process condensate from the LERF and 200 Area ETF and other aqueous waste generated from onsite remediation and waste management activities.

The LERF consists of three lined surface impoundments, or basins. Aqueous waste from LERF is pumped to the 200 Area ETF for treatment in a series of process units, or systems, that remove or destroy essentially all of the dangerous waste constituents. The treated effluent is discharged to a State-Approved Land Disposal Site (SALDS) north of the 200 West Area, under the authority of a Washington State Waste Discharge Permit Number ST0004500 (Ecology 2014) and 200 Area ETF Delisting (40 Code of Federal Regulations [CFR] 261, Appendix IX, Table 2). Construction of the LERF began in 1990. Waste management operations began at LERF in April 1994. Construction of the 200 Area ETF began in 1992. Waste management operations began at 200 Area ETF in November of 1995.

This Chapter provides unit-specific Permit conditions applicable to the dangerous waste management units for LERF and 200 Area ETF.

LIST OF ADDENDA SPECIFIC TO OPERATING UNIT GROUP 3

Addendum A	Part A Form, dated May 19, 2020
Addendum B	Waste Analysis Plan, dated May 19, 2020
Addendum C	Process Information, dated TBD~~May 19, 2020~~
Addendum D	Groundwater Monitoring, dated January 23, 2018
Addendum E	Security Requirements, dated June 30, 2011
Addendum F	Preparedness and Prevention, dated May 19, 2020
Addendum G	Personnel Training, dated June 30, 2015
Addendum H	Closure Plan, dated May 19, 2020
Addendum I	Inspection Requirements, dated May 19, 2020
Addendum J	Contingency Plan, dated April 30, 2019

DEFINITIONS

Flow Equalization: Flow equalization is the process by which concentrations of constituents are homogenized through blending of the wastewater in the LERF Basins, resulting in a more uniform loading of constituents prior to entering the appropriate treatment train.

State and Federal Delisting Actions: The state delisting action pursuant to Washington Administrative Code (WAC) 173-303-910(3), August 8, 2005, and the federal delisting action appearing in 40 CFR 261, Appendix IX, Table 2 applicable to the United States, Department of Energy, Richland, Washington.

ACRONYMS

LERF and 200 Area ETF	200-Area Liquids Processing Facility

C.2.4 Secondary Treatment Train

The secondary treatment system typically receives and processes the following by-products generated from the primary treatment train: concentrate from the first RO stage, filter backwash, regeneration waste from the IX system, and spillage or overflow received into the process sumps. Depending on the operating configuration; however, some aqueous waste could be processed in the secondary treatment train before the primary treatment train (refer to Figures C-4 and C-5 for example operating configurations).

The secondary treatment train provides the following processes:

- Secondary waste receiving - tank receiving and chemical addition.
- Evaporation - concentrates secondary waste streams.
- Concentrate staging - concentrate (brine) receipt, pH adjustment, and chemical addition.
- Brine loadout system - transfers brine waste into containers (totes).
- Thin film drying - dewatering of secondary waste streams.
- Container handling - packaging of dewatered secondary waste.

Secondary Waste Receiving. Waste to be processed in the secondary treatment train is received into two secondary waste receiving tanks, where the pH can be adjusted with sulfuric acid or sodium hydroxide for optimum evaporator performance. Chemicals, such as reducing agents, may be added to waste in the secondary waste receiving tanks to reduce the toxicity or mobility of constituents in the powder.

Evaporation. The Evaporator Vapor Body Vessel (60I-EV-1) is fed alternately by the two secondary waste receiving tanks. One tank serves as a waste receiver while the other tank is operated as the feed tank. The Evaporator Vapor Body Vessel (also referred to as the vapor body) is the principal component of the evaporation process (Figure C-11).

Feed from the secondary waste receiving tanks is pumped through a heater to the recirculation loop of the 200 Area ETF Evaporator. In this loop, concentrated waste is recirculated from the Evaporator Vapor Body Vessel, to a heater, and back into the evaporator where vaporization occurs. As water leaves the evaporator system in the vapor phase, the concentration of the waste in the evaporator increases. When the concentration of the waste reaches the appropriate density, a portion of the concentrate (brine) is pumped to one of the concentrate tanks.

The vapor that is released from the Evaporator Vapor Body Vessel is routed to the entrainment separator, where water droplets and/or particulates are separated from the vapor. The “cleaned” vapor is routed to the vapor compressor and converted to steam.

The steam from the vapor compressor is sent to the heater (reboiler) and used to heat the recirculating concentrate in the Evaporator Vapor Body Vessel. From the heater, the steam is condensed and fed to the distillate flash tank, where the saturated condensate received from the heater drops to atmospheric pressure and cools to the normal boiling point through partial flashing (rapid vaporization caused by a pressure reduction). The resulting distillate is routed to the surge tank. The non-condensable vapors, such as air, are vented through a vent gas cooler to the vessel off gas system.

Concentrate Staging. The concentrate tanks are upstream of the thin film drying process. From the Evaporator Vapor Body Vessel, concentrate (e.g. brine) is pumped into two concentrate tanks, and pH adjusted chemicals, such as reducing agents, may be added to reduce the toxicity or mobility of constituents as a brine, or when converted to powder. Excess heat is removed from the concentrate waste by ~~a~~ water-cooled heat exchangers. Each concentrate tank has a pair of heat exchangers installed in the concentrate recirculation line (see Drawing H-2-88988, Sheet 1 and 2). The cooling water is a closed recirculation loop to the cooling tower.

The specifications for the preparation, design, and construction of the tank systems at the 200 Area ETF are documented in the *Design Construction Specification, Project C-018H, 242-A Evaporator/PUREX Plant Process Condensate Treatment Facility* (V-C018HC1-001, WHC 1992). The preparation, design, and construction of Load-In Station tanks 59A-TK-109 and 59A-TK-117 are provided in the construction specifications in *Project W-291*, *200 Area Effluent BAT/AKART Implementation ETF Truck Load-in Facility*, *Construction Specifications* (*W-291H-C2*, KEH 1994). The preparation, design, and construction of Load-In Station tank 59A-TK-1 are documented in *Purgewater Unloading Facility Project Documentation* (HNF-39966, 2009).

Most of the tanks in the 200 Area ETF are constructed of stainless steel. According to the design of the 200 Area ETF, it was determined stainless steel would provide adequate corrosion protection for these tanks. Exceptions include Load-In Station tank 59A-TK-1, which is constructed of fiberglass-reinforced plastic and the verification tanks, which are constructed of carbon steel with an epoxy coating. The Evaporator Vapor Body Vessel (and the internal surfaces of the thin film dryer) is constructed of a corrosion resistant alloy, known as alloy 625, to address the specific corrosion concerns in the secondary treatment train. Finally, the hydrogen peroxide decomposer vessels are constructed of 316 stainless steel~~carbon steel and coated with a vinyl ester lining~~.

The shell thicknesses of the tanks identified in Table C-6 represent a nominal thickness of a new tank when placed into operation. The tank capacities identified in this table represent the maximum volumes. Nominal tank volumes discussed below represent the maximum volume in a tank unit during normal operations.

C.4.1.1 Codes and Standards for Tank System Construction

Specific standards for the manufacture of tanks and process systems installed in the 200 Area ETF are briefly discussed in the following sections. In addition to these codes and industrial standards, a seismic analysis for each tank and process system is required [WAC 173-303-806(4)(a)(xi)]. The seismic analysis was performed in accordance with UCRL-15910 *Design and Evaluation Guidelines for Department of Energy Facilities Subjected to Natural Phenomena Hazards*, Section 4 (UCRL 1987). The results of the seismic analyses are summarized in the engineering assessment of the 200 Area ETF tank systems (*Final RCRA Information Needs Report*, Mausshardt 1995).

Storage and Treatment Tanks. The following tanks store and/or treat dangerous waste at the 200 Area ETF.

Tank Name	Tank Number
Surge tank	60A-TK-1
pH adjustment tank	60C-TK-1
Effluent pH adjustment tank	60C-TK-2
First RO feed tank	60F-TK-1
Second RO feed tank	60F-TK-2
Verification tanks (three)	60H-TK-1A/1B/1C
Secondary waste receiving tanks (two)	60I-TK-1A/1B
Evaporator Vapor Body Vessel	601-EV-1
Concentrate tanks (two)	60J-TK-1A/60J-TK-1B
Sump tanks (two)	20B-TK-1/2
Distillate flash tank	60I-TK-2
Load-In Station tank	59A-TK-1
Load-In Station Sump Tanks	59A-TK-2/59A-TK-3

Table C-7 200 Area Effluent Treatment Facility Additional Tank System Information

Tank Description	Liner Material	Pressure Control	Foundation Material	Structural Support	Seam	Connection
Distillate Flash Tank 60I-TK-2	None	Pressure Relief Valve/Vent to Vent Gas Cooler/VOG	Concrete Slab	Carbon Steel I-Beam and Cradle	Welded	Flanged
Sump Tank 1 20B-TK-l	None	Vent to VOG	Concrete Containment	Reinforced Concrete Containment Basin	Welded	Flanged
Sump Tank 2 20B-TK-2	None	Vent to VOG	Concrete Containment	Reinforced Concrete Containment Basin	Welded	Flanged

DFT = distillate flash tank

VOG = vessel off gas system

Table C-8 Ancillary Equipment and Material Data

System	Ancillary Equipment	Number	Material
Load-In Station Tank	Load-In Station/Transfer Pumps (2)	P-103A/-103B	316 SS
		P-001A/-001B	Cast Iron
	Load-In Station Filters (6)	59A-FL-001/-002/-003/-004/-005/-006	304 SS
Load-In Filter Sump Tanks 59A-TK-2/59A-TK-3	Transfer pumps (2)	59A-P-2/59A-P-3	Cast Iron/SS
	59A-TK-2 level switch	59A-P-2 (level switch part of pump assembly)	PVC
	59A-TK-3 level gauge	LI-59A-303	SS
Surge Tank	Surge Tank Pumps (3)	60A-P-1A/-1B/-1C	CS with ETFE coating
Rough Filter	Rough Filter	60B-FL-1	304 SS
UV/OX	UV Oxidation Inlet Cooler	60B-E-1	316 SS
	UV Oxidizers (4)	60D-UV-1A/-1B/-2A/-2B	316 SS
pH Adjustment	pH Adjustment Pumps (2)	60C-P-1A/-1B	304 SS
Peroxide Decomposer	H2O2 Decomposers (2)	60D-CO-1A/-1B	316 SS~~CS with Epoxy Coating~~
Fine Filter	Fine Filter	60B-FL-2	304 SS
Degasification	Degasification Column Inlet Cooler	60E-E-1	316 SS
	Degasification Column	60E-CO-1	FRP
	Degasification Pumps (2)	60E-P-1A/-1B	316 SS

Table C-8 Ancillary Equipment and Material Data

System	Ancillary Equipment	Number	Material
	Concentrate heat exchanger ~~(2)~~(4) Ecology's Changes	60J-E-02A 60J-E-02B 60J-E-03A 60J-E-03B	316L SS
Brine loadout system	Tote fill lid	N/A	Plastic/316 SS
	Inline flowmeter	60J-333	SS/ETFE liner
	Automatic shutoff valve	60J-334/60J-335	316 SS
Thin Film Dryer	Concentrate Feed Pump	60J-P-2	316 SS
	Thin Film Dryer	60J-D-1	Interior Surfaces: Alloy 625 Rotor and Blades: 316 SS
	Powder Hopper	60J-H-1	316 SS
	Spray Condenser	60J-DE-01	316 SS
	Distillate Condenser	60J-CND-01	Tubes: 304 SS Shell: CS
	Dryer Distillate Pump	60J-P-3	316 SS
Resin Dewatering	Portable Pump	60G-P-1	Plastic

ETFE = ethylene tetrafluoroethylene. ETFE is a Teflon product.

Table C-9 Concrete and Masonry Coatings

Location	Product Name	Applied Film Thickness, Estimated
		Mils
2025E Process Area, Truck Bay, and Container Storage Area		
Floor: Topcoat	Chemproof PermaCoat 4000[1]	2 coats at 12-16 mils
Walls to 7 feet, Doors & Jambs	Chemproof PermaCoat 4000 Vertical[1]	2 coats at 12-16 mils
2025ED Load-In Station Tank Pit		
Floor and Walls Topcoat	Elasti Liner I/II[2,3]	80 mils
Floor and Walls: Primer	Techni-Plus E[2]	5.0-7.0 mils
Surge Tank and Verification Tank Berms		
Floors (and Walls at Surge Tank): Topcoat	Elasti-Liner I[2]	80 mils
Floors (and Walls at Surge Tank): Primer	Techni-Plus E3[2]	5.0-7.0 mils

[1]PermaCoat is a trademark of Chemproof Polymers, Inc.

[2]Elasti-Liner and Techni-Plus are trademarks of KCC Corrosion Control, Inc.

NOTES:

1. SEE H-2-88351 SH 1 FOR LEGEND AND ABBREVIATIONS.
2. PIPING CATEGORY:
   95C CONCENTRATE PIPING – ASME B31.3
   95C COOLING WATER PIPING – ASME B31.1
3. AN IDENTIFICATION TAG SHALL BE SUPPLIED AND ATTACHED WITH STAINLESS STEEL WIRE TO THE VALVES AND COMPONENTS. 1/4" STAMPED OR ENGRAVED CHARACTERS SHALL BE USED ON A STAINLESS STEEL TAG PER TFC-ENG-STD-12. THE TAG SHALL INCLUDE THE EQUIPMENT IDENTIFICATION NUMBER (EIN) AS IDENTIFIED ON THE P&ID.

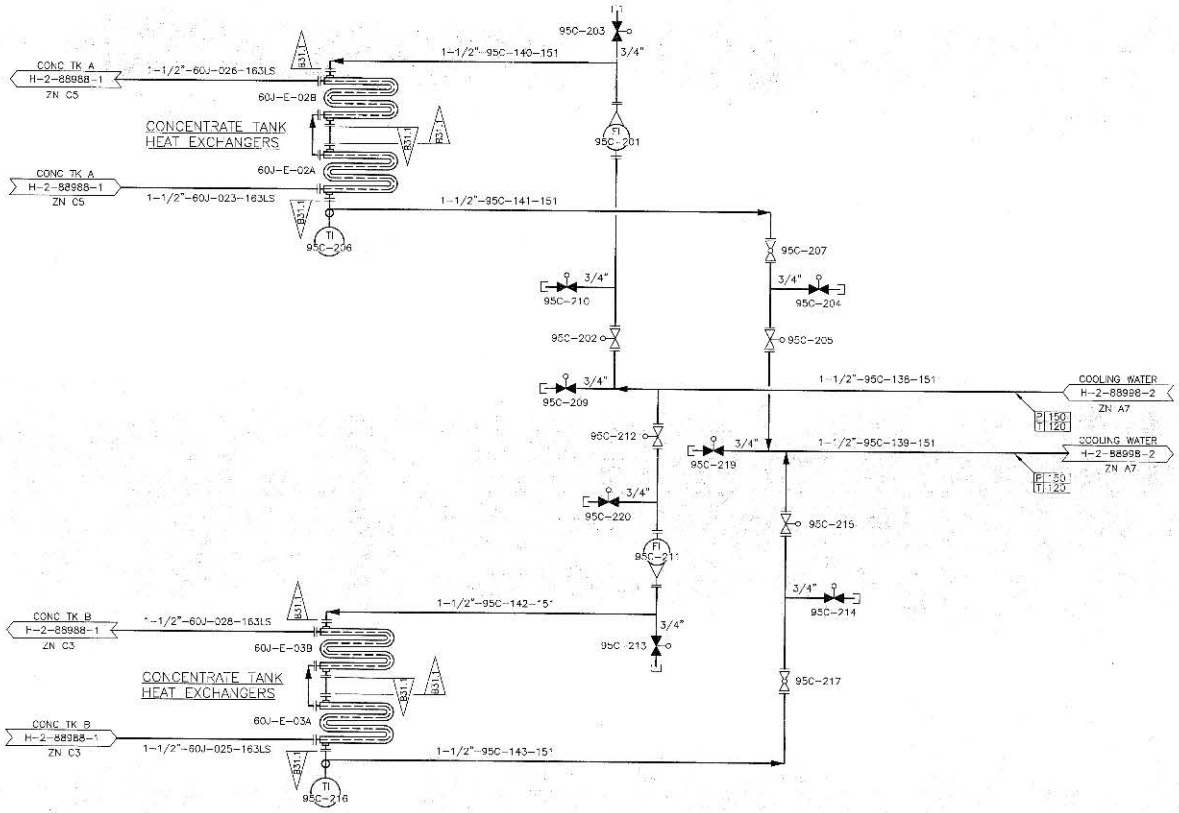

5/29/20 6/28/20

DWG NUMBER	TITLE
DRAWING TRACEABILITY LIST	

REF NUMBER	TITLE
H-2-838175	DRAWING LIST/TITLE SHEET
REFERENCES	
NEXT USED ON SHEET 1	

REV NO	DESCRIPTION
1	DIRECT REVISION PER ED1-882569
REVISIONS	

BLDG NO 2025E
INDEX NO 7004

CAUTION: NOT COMPLETE WITHOUT CURRENT CHANGE DOCUMENTS FROM DATABASE

NAME	DATE	COMPANY
DRAWN I. CHAVEZ		
CHECKED V. GAINES		
ENGINEER N.N. BINSON		
PROJECT ENGINEER J.L. LUJA		
DESIGN TK FIRM E.S. GIBSON		

U.S. DEPARTMENT OF ENERGY
Office of River Protection

P & ID
CONCENTRATE RECEIVING SYS
HEAT EXCHANGER

SIZE F | DRAWING NUMBER H-2-88988 | SHEET 2 | REV 01
SCALE NONE

29017 DOE/RL-J.DWG (SEPTEMBER 2016)